Grid Solutions



# MULTILIN G30

## Protection for Small to Medium Generators Combined Generators and Transformers

The Multilin™ G30 generator protection system provides comprehensive protection for small to medium-sized steam, hydraulic and combustion-turbine generators as well as applications that have both the generator and transformer in the same zone of protection.

The G30 is ideal for protecting single and multi-pole generators with single or split-phase winding configurations of generators. The G30 includes advanced automation and communication capabilities, extensive I/O options, and powerful fault recording features that can simplify fault and disturbance troubleshooting and minimize generator downtime.

### Key Benefits

- Advanced automation capabilities for providing customized protection and control solutions
- Combined generator and transformer protection solution extending asset life
- An integrated large, full color display, provides real-time visualization and control of the protected bay, via a bay mimic as well as annunciator functionality and graphical visualization of phasors
- Advanced IEC 61850 Ed. 1 and Ed. 2 certified implementation, complete settings via SCL files and comprehensive process bus support (IEC 61850-9-2LE or IEC 61869 or IEC 61850-9-2 Hardfiber) ensures interoperability, device managing optimization and reduced cost of ownership
- Routable GOOSE (R-GOOSE) enables GOOSE messages going beyond the substation, which enables wide area protection and control applications
- Increased network availability via failover time reduced to zero through IEC® 62439-3 "PRP" support
- Supports latest edition of waveform capture (COMTRADE 2013) simplifying fault records management
- Embedded multi-range signal oscillation detection (MSOD)

### Applications

- Small to medium-sized generators typically driven by steam, gas or hydraulic turbines
- Pumped storage generators
- Combined generator and transformer in the zone of protection
- Distributed Generator (DG) interconnect protection as per IEEE® 1547

### Protection and Control

- Generator differential protection including transformer
- Restricted ground fault, thermal overload protection, directional, time, instantaneous, phase, neutral, negative sequence and ground overcurrent protection
- Advanced functionalities such as Loss of excitation, overexcitation, 3rd Harmonic neutral undervoltage, Generator unbalance, reverse and low forward power and accidental energization
- Protection and control functionality in one box, reducing the number of devices
- High density inputs/outputs to support the control of many switchyard assets – all from one powerful device
- Integrated large, full color display, for real-time visualization and control of the protected bay

### Advanced Communications

- 3 independent Ethernet ports for simultaneous & dedicated network connections with IEEE 1588 support
- IEC 61850-9-2LE/IEC 61869 networked or IEC61850-9-2 Hardfiber process bus support

### Cyber Security

- CyberSentry™ provides high-end cyber security aligned to industry standards and services (NERC® CIP, AAA, Radius, RBAC, Syslog)

### Monitoring & Metering

- Advanced recording capabilities with high-capacity event recorder, configurable and extended waveform capture and data logger
- Metering: current, voltage, power, energy, frequency, and harmonics
- Embedded multi-range signal oscillation detection (MSOD)

GE VERNOVA

## Protection and Control

As part of the UR family of Protection & Control devices, the Multilin G30 offers a high degree of modularity in its design and functionality, providing superior performance while meeting the toughest requirements of the marketplace. Advanced protection and control features of this relay includes:

### Generator/Transformer Differential

High-speed percent differential protection is provided for detecting and clearing both generator stator and transformer winding faults that occur in the zone of protection of a single generator. The differential protection element has built-in phase compensation and magnitude compensation characteristics that allow for dealing with the inherent offset that occurs with CTs located on different windings of the transformer. These compensation characteristics eliminate the need for installing additional interposing CTs to account for the difference in parameters measured by the relay. Advanced CT saturation and failure detection algorithms maintain immunity to high current AC and low current DC saturation conditions that may occur due to external disturbances, such as transformer inrush or near generator faults, without sacrificing speed or sensitivity.

### 2nd Harmonic Inrush Inhibit

The G30 utilizes a 2nd harmonic inrush inhibit function to block the G30 from tripping under transformer inrush conditions that can otherwise cause the differential element to maloperate. This element can be configured to include the energization of different types of transformers by using either a traditional or adaptive mode of 2nd harmonic restraint. The adaptive 2nd harmonic restraint maintains protection dependability and speed on internal faults while ensuring security during inrush conditions even with weak second harmonics.

### Overexcitation Inhibit

An increase in transformer voltage or decrease in system frequency may result in overexcitation of the transformer. It is often desirable to prevent operation of the percent differential element in these cases. Therefore a fifth harmonic inhibit is integrated into a percent differential function to protect for overexcitation conditions resulting from an increased V/Hz ratio. The overexcitation inhibit works on a per-phase basis and is user-definable.

### Harmonic/Inrush detection

The Harmonic detection element monitors the selected 2nd to 5th harmonic or Total Harmonics Distortion (THD), which is present in the phase currents. The relay provides six identical Harmonic Detection elements.

During transformer energization or motor starts, the inrush current present in phase currents can impact some sensitive elements, such as negative sequence overcurrent. Therefore, the ratio of the second harmonic to the fundamental magnitude per phase is monitored, while exceeding the settable pickup level, an operand is asserted, which can be used to block such sensitive elements.

## Functional Block Diagram

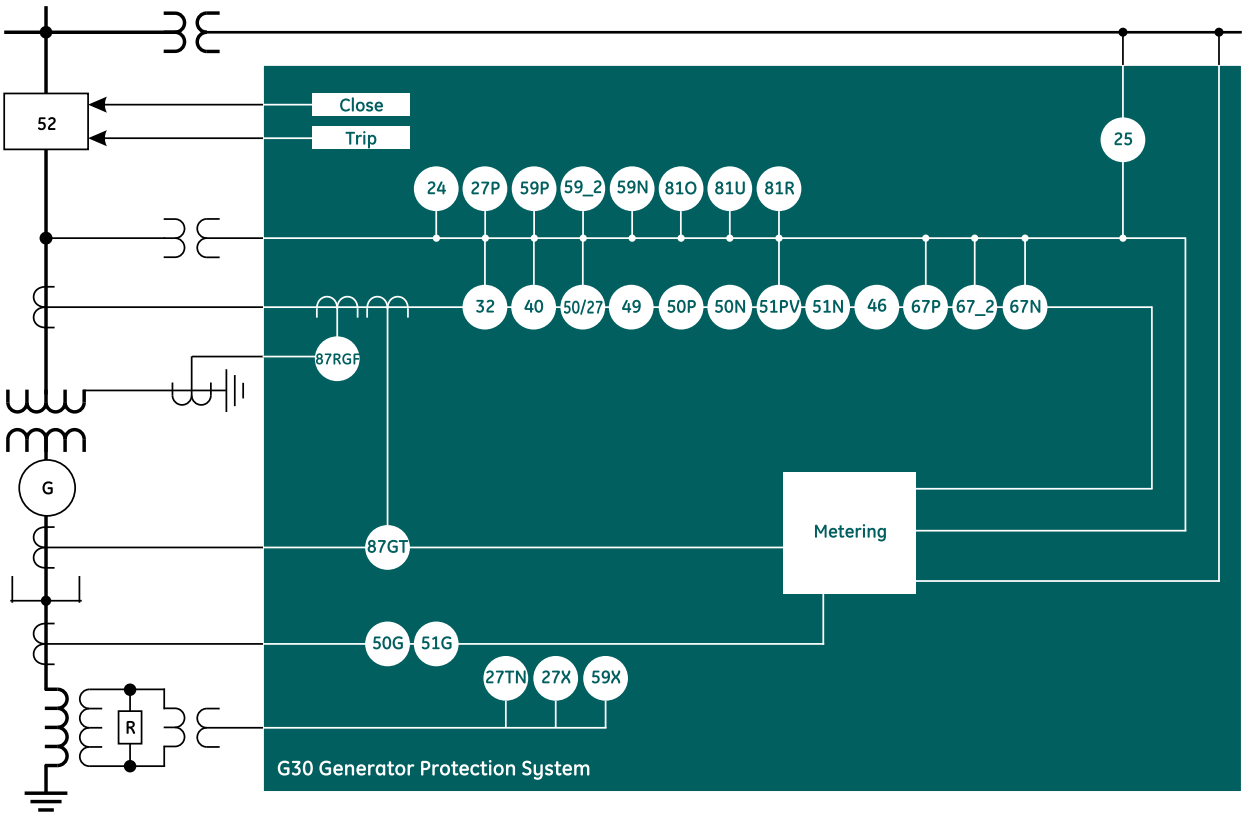

## ANSI® Device Numbers & Functions

| DEVICE NUMBER | FUNCTION |
|---|---|
| 24 | Volts per hertz |
| 25 | Synchrocheck |
| 27P | Phase undervoltage |
| 27TN | Third harmonic neutral undervoltage |
| 27X | Auxiliary undervoltage |
| 32 | Sensitive directional power |
| 40 | Loss of excitation |
| 46 | Generator unbalance |
| 49 | Thermal overload protection |
| 50G | Ground instantaneous overcurrent |
| 50N | Neutral instantaneous overcurrent |

| DEVICE NUMBER | FUNCTION |
|---|---|
| 50P | Phase instantaneous overcurrent |
| 50SP | Split phase protection |
| 50/27 | Accidental energization |
| 51G | Ground time overcurrent |
| 51N | Neutral time overcurrent |
| 51PV | Phase time overcurrent with voltage restraint |
| 59N | Neutral overvoltage |
| 59P | Phase overvoltage |
| 59X | Auxiliary overvoltage |
| 59_2 | Negative-sequence overvoltage |

| DEVICE NUMBER | FUNCTION |
|---|---|
| 67_2 | Negative-sequence directional overcurrent |
| 67N | Neutral directional overcurrent |
| 67P | Phase directional overcurrent |
| 81O | Overfrequency |
| 81R | Rate of change of frequency |
| 81U | Underfrequency |
| 87RGF | Restricted ground fault |
| 87GT | Generator/transformer differential |
| | Harmonic/Inrush detection |

## 2nd Harmonic Blocking Characteristic

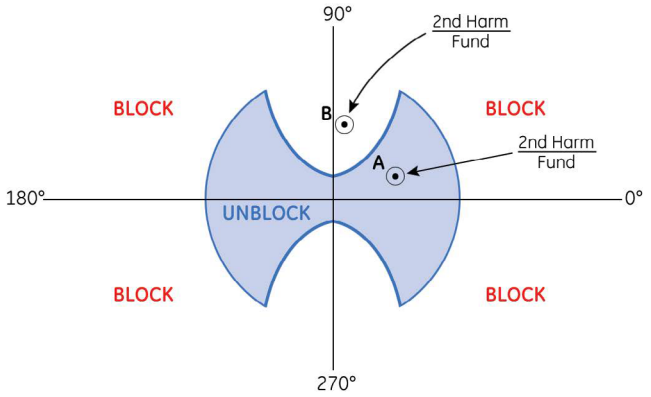


*The adaptive 2nd harmonic inhibit function will stop blocking the differential element as soon as the 2nd harmonic level drops below the pickup level if the angle of the 2nd harmonic to fundamental ratio is close to 0° or 180° (Point A). If the angle of the 2nd harmonic to fundamental ratio is close to 90°or 270°, this is an indication that the transformer is an inrush condition, even if the magnitude drops below the pickup level. The adaptive 2nd harmonic inhibit function will continue to block the differential element for an extended period of time (Point B).*

### Split-Phase Protection

Split-phase protection is provided for sensitive detection for inter-turn faults and can be run in conjunction with the primary stator differential protection. Independent settings are provided on a per-phase basis and a single-slope bias characteristic is used to allow operation on machines with a section of winding bypassed.

### Restricted Ground Fault (RGF)

Restricted ground fault protection (also known as zero-sequence differential) extends protection coverage to the neutral point of the stator winding, where fault currents may be below the pickup of the main stator differential element. The low-impedance RGF protection provided by the G30 uses an optimized adaptive restraint signal that provides security for external fault conditions that may cause CT saturation while still maintaining sensitivity for internal faults.

### Sensitive Directional Power

Two separate directional power elements are pro-vided to detect reverse and low forward power conditions that are often needed for ensuring power only flows in one direction through the breaker. Each element responds to either reverse or low forward power flow and can be used to provide independent alarm and trip settings.

### Loss of Excitation

Generator loss of excitation protection is provided via two negative offset mho characteristics as per IEEE C37.102. Independent pickup time delay settings and blocking input provide security for blown VT fuses and power swing conditions.

### Frequency Rate of Change

The four available frequency rate of change (df/dt) elements can be used to provide protection against system disturbances through load shedding and to provide anti-islanding protection. These elements monitor the speed by which the frequency changes in any direction, through voltage, current, and frequency supervision.

### Pump Storage Generator

The G30 provides six elements to monitor differences in voltage magnitudes, phase angles, and frequencies taking the CB closing time into account to perform synchronism checks across breakers. The G30 can be used in conjunction with an external synchronizer as an independent check of the synchronizer prior to closing the generator breaker.

### Synchronism Check

The G30 provides four elements to monitor differences in voltage magnitudes, phase angles, and frequencies to perform synchronism checks across breakers (up to four). The G30 can be used in conjunction with an external synchronizer as an independent check of the synchronizer prior to closing the generator breaker.

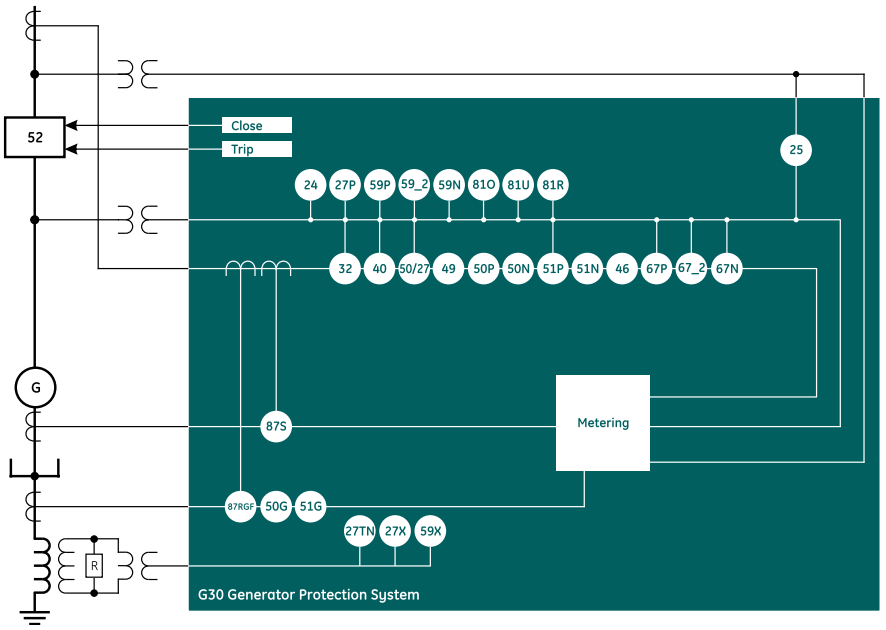


### IEC 61869 and 61850-9-2LE Process Bus

Three UR process bus modules enable communicating to Merging Units "MU" that comply to either IEC 61869 standard or IEC 61850-9-2LE technical report. MUs connect to the primary asset and translate analog signals and digital status/commands to standard sample values "SV" data and GOOSE messages.

Flexibility for connecting to different network size and topology is granted through 100Mbps and/or 1Gbps Ethernet port support, plus IEC 62439 PRP or HSR standard redundancy, plus Star, Ring and Point-to-point network support.

For time synchronization purposes, this Process bus module can become an IEEE 1588 slave clock (61850-9-3 profile) or a 1588 Grand Master clock which removes the need of external time sources connected to the process bus network.

Customers who may not be using GE Vernova MU devices, could use MU from other vendors. Interoperability with MU from other vendors is expected when they comply to the mentioned standards.

### IEC 61850-9-2 HardFiber Process Bus

The IEC 61850 Process Bus module is designed to interface with the Multilin HardFiber System, allowing bi-directional IEC 61850 fiber optic communications. The HardFiber System is designed to integrate seamlessly with existing UR applications, including protection functions, FlexLogic™, metering and communications.

The Multilin HardFiber System offers the following benefits:

- Communicates using open standard IEC 61850 messaging
- Drastically reduces P&C design, installation and testing labor by eliminating individual copper terminations
- Integrates with existing G30's by replacing traditional CT/VT inputs with the IEC 61850 Process Bus module
- Does not introduce new cyber security concerns

Visit the HardFiber System product page on the Grid Solutions at GE Vernova website for more details.

## Advanced Automation

The G30 incorporates advanced automation features including powerful FlexLogic programmable logic, communication, and SCADA capabilities that far surpass what is found in the average generator relay. The G30 integrates seamlessly with other UR relays for complete system protection, including the unit and auxiliary transformers, and balance of plant protection.

### FlexLogic

FlexLogic is the powerful UR-platform programming logic engine that provides the ability to create customized protection and control schemes, minimizing the need and associated costs of auxiliary components and wiring. With 1024 lines of FlexLogic, the G30 can be programmed to provide the required tripping logic along with custom scheme logic for generator breaker control (including interlocking with external synchronizers), transfer tripping schemes for remote breakers and dynamic setting group changes.

### Scalable Hardware

The G30 is available with a multitude of I/O configurations to suit the most demanding application needs. The expandable modular design allows for easy configuration and future upgrades.

- Multiple CT/VT configurations allow for the implementation of many differential schemes, including concurrent split-phase and differential protection
- Flexible, modular high density I/O covering a broad range of input signals and tripping schemes
- Up to 120 digital inputs and up to 72 digital outputs are available
- Types of digital outputs include trip-rated Form-A and Solid State Relay (SSR) mechanically latching, and Form-C outputs
- RTDs and DCmA inputs are available to monitor equipment parameters such as temperature and pressure

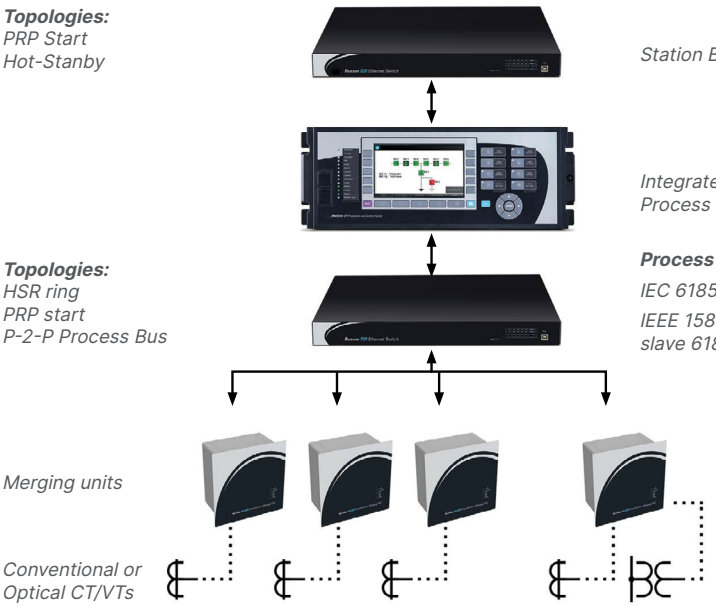


## Monitoring and Metering

The G30 includes high accuracy metering and recording for all AC signals. Voltage, current, and power metering are built into the relay as a standard feature. Current and voltage parameters are available as total RMS magnitude, and as fundamental frequency magnitude and angle.

### Fault and Disturbance Recording

The advanced disturbance and event recording features within the G30 can significantly reduce the time needed for postmortem analysis of power system events and the creation of regulatory reports. Recording functions include:

- Sequence of Event (SOE)
  - 1024 time stamped events
- Oscillography
  - Supports IEEE C37.111-1999/2013, IEC 60255-24 Ed 2.0 COMTRADE standard
  - 128 digital & up to 56 analog channels
  - Events up to 45s in length
- Data Logger and Disturbance Recording
  - 16 channels up to 1 sample/cycle/channel
- Fault Reports
  - Powerful summary report of pre-fault and fault values

The very high sampling rates and large amounts of storage space available for data recording in the G30 can eliminate the need for installing costly stand-alone recording equipment.

### Advanced Device Health Diagnostics

The G30 performs comprehensive device health diagnostic tests at startup and continuously during run-time to test its own major functions and critical hardware. These diagnostic tests monitor for conditions that could impact security and availability of protection, and present device status via SCADA communications and front panel display. Providing continuous monitoring and early detection of possible issues help improve system uptime.

- Comprehensive device health diagnostic performed at startup
- Monitors the CT/VT input circuitry to validate the integrity of all signals
- Input, outputs, trip circuits and analog channels are continuously monitored for accuracy and performance

### Multi-range Signal Oscillation Detection (MSOD)

A general purpose multi-range signal oscillation detector (MSOD) meets a broad-range of application needs for detecting power system oscillation. Oscillations are always present in power systems due to the electromechanical nature of the electric grid. However, some oscillations may become poorly or negatively damped, and could lead to system instabilities, equipment damages or system blackout if such oscillations are not detected and proper remedy actions are not taken in time.

## Cyber Security - CyberSentry UR

CyberSentry™ is a software option that delivers wide range of cyber security features that help customers to comply with NERC CIP, NIST® IR 7628, IEC 62351 and IEC 62443 cyber security requirements and standards. Additionally secure FW upgrade is granted through UR Setup's digital signature validation capabilities. This software option delivers the following core features:

### AAA Server Support (Radius/LDAP)

Enables integration with centrally managed authentication and accounting of all user activities and uses modern industry best practices and standards that meet and exceed NERC CIP requirements for authentication and password management.

### Role Based Access Control (RBAC)

Efficiently administrate users and roles within UR devices. The new and advanced access functions allow users to configure up to five roles for up to eight configurable users with independent passwords. The standard "Remote Authentication Dial In User Service" (Radius) is used for authentication.

### Event Recorder (Syslog for SEM)

Capture all cyber security related events within a SOE element (login, logout, invalid password attempts, remote/local access, user in session, settings change, FW update, etc), and then serve and classify data by security level using standard Syslog data format. This will enable integration with established SEM (Security Event Management) systems.

## Communications

The G30 provides advanced communications technologies for remote data and engineering access, making it the easiest and most flexible generator protection relay to use and integrate into new and existing infrastructures. Direct support for fiber optic Ethernet provides high-bandwidth communications allowing for low-latency controls and high-speed file transfers of relay fault and event record information. The available three independent Ethernet ports, redundant Ethernet option and the embedded managed Ethernet switch provide the means to create fault tolerant communication architectures in an easy, cost-effective manner without the need for intermediary communication hardware.

The G30 supports the most popular industry standard protocols enabling easy, direct integration into DCS and SCADA systems.

- IEC 61850 Ed. 1 and Ed. 2 Station Bus, IEC 61850-2-2LE /IEC 61869 networked or IEC 61850-9-2 HardFiber Process Bus, and IEC 61850-90-5 PMU over GOOSE support
- DNP 3.0 (serial & TCP/IP)
- Ethernet Global Data (EGD)
- IEC 60870-5-103 and IEC 60870-5-104
- Modbus RTU, Modbus TCP/IP
- HTTP, TFTP, SFTP and MMS file transfer
- IEEE1588 and redundant SNTP for time synchronization
- PRP as per IEC 62439-3
- IEC61850 GOOSE, Routable GOOSE and legacy UCA fixed GOOSE

## Power System Troubleshooting




*The G30 contains many tools and reports that simplify and reduce the amount of time required for troubleshooting power system events.*

### Interoperability with Embedded IEC 61850 Ed. 1 and Ed. 2

The new IEC 61850 implementation in the UR Family positions GE Vernova as an industry leader in this standard.

- Implements, user selectable, Ed. 1 and Ed. 2 of the standard across the entire UR Family
- Provides full relay setting management via standard SCL files (ICD, CID and IID)
- Enables automated relay setting management using 3rd party tools through standard file transfer services (MMS and SFTP)
- Increases the number of Logical Devices and data mapped to them, GOOSE messages from up to 64 remote devices, and reports to support different organizational needs for data transfer and reduce dependency on generic logical nodes
- Configures GE Vernova Systems based on IEC 61850 using universal 3rd party tools
- R-GOOSE enable customer to send GOOSE messages beyond the substation, which enables WAPC and more cost effective communication architectures for wide area applications

### Direct I/O Messaging

Direct I/O allows for the sharing of high-speed digital information between multiple UR relays via direct back-to-back connections or multiplexed through a standard DS0 multiplexer channel bank. Regardless of the connection method, direct I/O provides continuous real-time channel monitoring that supplies diagnostics information on channel health.

Direct I/O provides superior relay-to-relay communications that can be used in advanced interlocking, generation rejection and other special protection schemes.

- Communication with up to 16 UR relays in single or redundant rings rather than simplistic point-to-point configurations
- Connect to standard DS0 channel banks through standard RS422, G.703 or IEEE C37.94 interfaces or via direct fiber optic connections
- Built-in continuous loop and channel monitoring provides real-time diagnostics of your communication channels with no external or handheld tester required

### LAN Redundancy

Substation LAN redundancy has been traditionally accomplished by reconfiguring the active network topology in case of failure. Regardless of the type of LAN architecture (tree, mesh, etc), reconfiguring the active LAN requires time to switchover, during which the LAN is unavailable. UR devices deliver redundancy as specified by PRP-IEC 62439-3, which eliminates the dependency on LAN reconfiguration and the associated switchover time. The UR becomes a dual attached node that transmits data packets over both main and redundant networks simultaneously, so in case of failure, one of the data packets will reach the receiving device with no time delay.

### Multi-Language

UR devices support multiple languages: English, French, Russian, Chinese, Turkish, German, Polish and Japanese. These language options are available on the front panel, in the EnerVista setup software, and in the product manuals. Easily switch between English and an additional language on the local displays without uploading new firmware.

## EnerVista Software

The EnerVista suite is an industry-leading set of software programs that simplifies every aspect of using the G30 relay. The EnerVista suite provides all the tools to monitor the status of your generator, maintain your relay, and integrate information measured by the G30 into DCS or SCADA monitoring systems. Convenient COMTRADE and SOE viewers are an integral part of the UR setup software included with every UR relay, to carry out postmortem event analysis to ensure proper protection system operation. UR Setup also provides an export/import setting file tool which allows customer to transfer specific settings from one file to another. This tool also provides comprehensive setting file comparison. These features, together with UR single setting file, help users to simplify their setting file management experience.

### EnerVista Launchpad

EnerVista Launchpad is a powerful software package that provides users with all of the setup and support tools needed for configuring and maintaining Multilin products. The setup software within Launchpad allows for the configuration of devices in real-time by communicating using serial, Ethernet, or modem connections, or offline by creating setting files to be sent to devices at a later time.

Included in Launchpad is a document archiving and management system that ensures critical documentation is up-to-date and available when needed. Documents made available include:

- Manuals
- Application Notes
- Guideform Specifications
- Brochures
- Wiring Diagrams
- FAQs
- Service Bulletins

### Viewpoint Monitoring

Viewpoint Monitoring is a simple-to-use and full-featured monitoring and data recording software package for small systems. Viewpoint Monitoring provides a complete HMI package with the following functionality:

- Plug & Play Device Monitoring
- System Single-Line Monitoring & Control
- Annunciator Alarm Screens
- Trending Reports
- Automatic Event Retrieval
- Automatic Waveform Retrieval

**SECURITY/CHANGE HISTORY REPORT**

Generated at: Sep 09 **2006** 14:30:40

**Device Summary**

| | |
|---|---|
| Device Name: | GEN/TRANSFORMER |
| Device Type: | UR G30 |
| Order Code: | G30-K01-HPH-F8L-H6A-M8N-H6B |
| Firmware Version: | 5.20 |
| Serial Number: | MACC5867834227 |
| IP Address: | 3.94.24.172 |



**Setting Changes History**

| Event | Date of Change | # of Changes | Password Entered | Method of Change | Changed by Whom (MAC address) | Filename Uploaded | Status | Firm. Version |
|---|---|---|---|---|---|---|---|---|
| 16 | 09/22 2006, 3:26 PM | 3 | Yes | Ethernet | 00A0953B6A02 | | In Service | 5.20 |
| 15 | 09/21 2006, 11:15 AM | 24 | Yes | Ethernet | 00A0953B6A02 | Gen-B-Rev3.urs | In Service | 5.20 |
| 14 | 09/21 2006, 9:26 AM | 6 | Yes | Ethernet | 00A0953B6A02 | | Out of Service | 5.20 |
| 13 | 07/16 2006, 4:02 PM | 4 | Yes | Keypad | | | In Service | 5.20 |
| 12 | 07/16 2006, 10:51 AM | 12 | Yes | Front Port | 00A09BB123AC | | In Service | 5.20 |
| 11 | 07/15 2006, 12:33 PM | 2 | No | Front Port | 00A09BB123AC | | In Service | 5.20 |
| 10 | 12/06 2005, 1:41 PM | 3 | No | Ethernet | 00A09BB123AC | | In Service | 5.20 |
| 9 | 12/05 2005, 9:46 AM | 46 | No | Ethernet | 00A09BB123AC | Gen-B-Rev2.urs | In Service | 5.20 |
| 8 | 12/23 2005, 4:22 PM | 3 | No | Ethernet | 00A09BB123AC | | Out of Service | 5.20 |
| 7 | 12/23 2005, 11:53 AM | 8 | No | Keypad | | | Out of Service | 5.20 |

**Setting Changes Detail History**

| Event | Date of Change | Old Value | New Value | Item | Modbus Address |
|---|---|---|---|---|---|
| 16 | 09/09/05 02:18 PM | Disabled | Enabled | Thermal Model Events | 0x6620 |
| 16 | 09/09/05 01:10 PM | Disabled | Enabled | Thermal Model Function | 0x6620 |
| 16 | 09/09/05 12:45 PM | Disabled | Enabled | Acceleration Events | 0x6900 |
| 16 | 09/09/05 12:10 PM | 10.00s | 9.00s | Acceleration Time | 0x6900 |
| 16 | 09/09/05 11:05 AM | Disabled | Enabled | Acceleration Function | 0x6900 |

### Providing Traceability and Regulatory Audit Tracking

*The G30 tracks and records information about configuration changes that have been made to the relay, providing a method to audit system security and engineering processes.*

## User Interface

The N60 front panel provides extensive local HMI capabilities. The local display is used for monitoring, status messaging, fault diagnosis, and device configuration. User-configurable messages that combine text with live data can be displayed when user-defined conditions are met.

A 7” color, graphic HMI is optionally available that allows users to have customizable bay diagrams with local monitoring of status, values and control functionality. The alarm annunciator panel provides the configuration of up to 96 signals (alarms and status) with full text description.

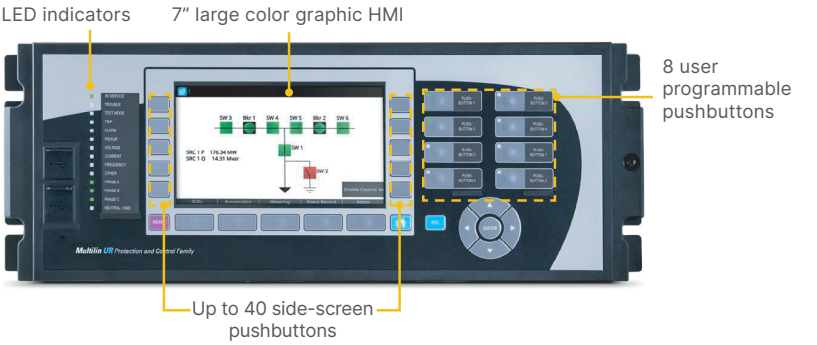


## Typical Wiring

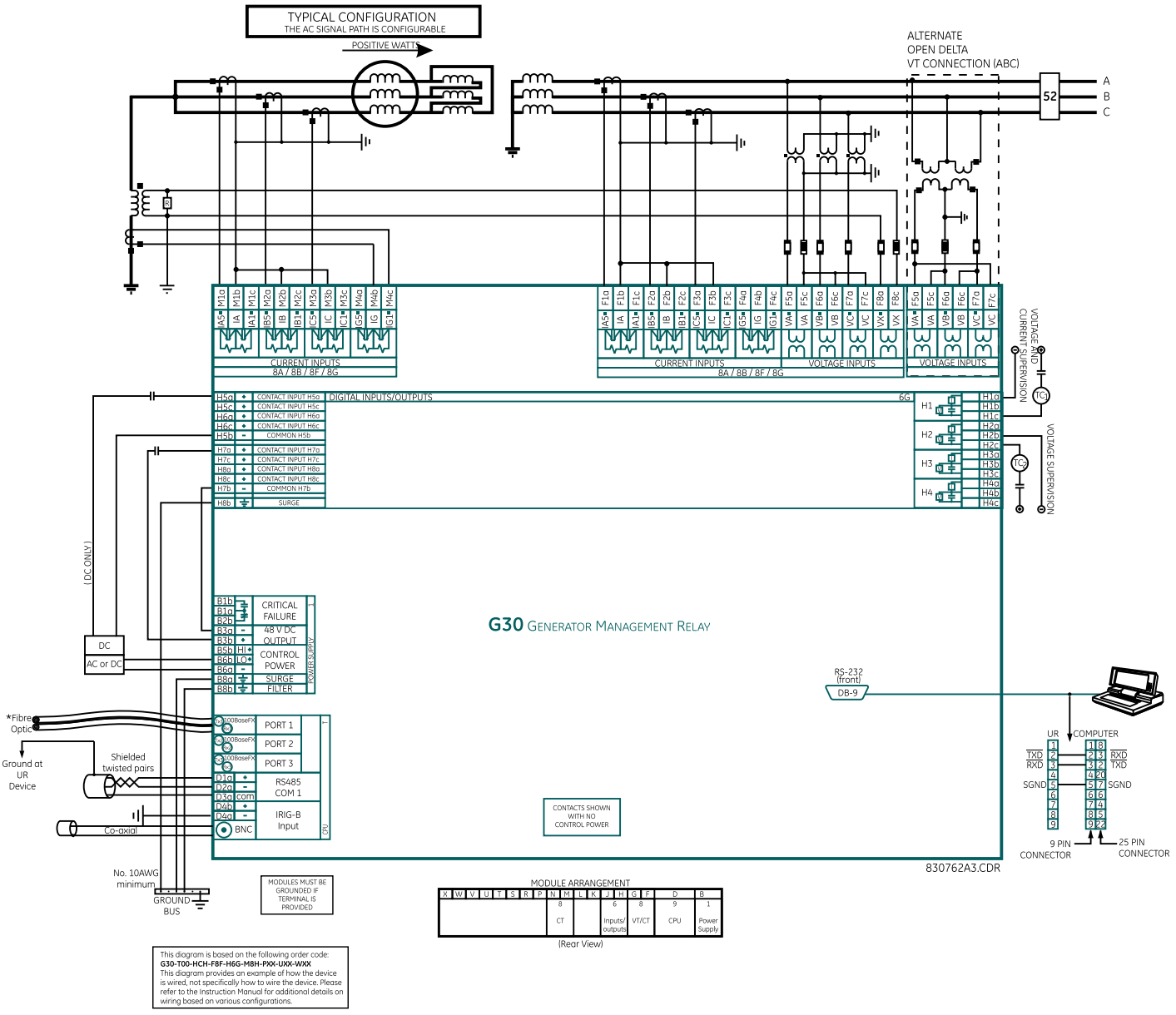

## Ordering

| | G30 - | * | 00 - | H | * | * | - F ** | - H ** | - M ** | -P ** | -U ** | -W/X ** | For Full Sized Horizontal Mount |
|---|---|---|---|---|---|---|---|---|---|---|---|---|---|
| Base Unit | G30 | | | | | | | | | | | | Base Unit |
| CPU | | T<br>U<br>V<br>W | | | | | | | | | | | RS485 + three multimode SFP LC 100BaseFX<br>RS485 + two multimode SFP LC 100BaseFX + one SFP RJ45 100BaseT<br>RS485 + three SFP RJ45 100BaseT<br>RS485 + two 100BaseFx Eth, Multimode ST + one 10/100BaseT Eth, RJ-45[3] |
| Software Options[1] | | | 00<br>01<br>03<br>04<br>A0<br>B0<br>C0<br>D0<br>SA | | | | | | | | | | No Software Options<br>Ethernet Global Data (EGD)<br>IEC 61850<br>Ethernet Global Data (EGD) + IEC 61850<br>CyberSentry UR Lvl 1<br>IEEE 1588<br>PRP<br>IEEE 1588 + CyberSentry<br>IEC60870-5-103 + IEEE1588 + PRP + IEC61850 + CyberSentry UR Lvl 1 + MSOD |
| Mount / Coating | | | | H<br>A<br>V<br>B | | | | | | | | | Horizontal (19" rack) - Standard<br>Horizontal (19" rack) - Harsh Environment Coating<br>Vertical (3/4 size) - Standard<br>Vertical (3/4 size) - Harsh Environment Coating |
| User Interface | | | | | E<br>F<br>I<br>J<br>K<br>L<br>M<br>N<br>Q<br>T<br>U<br>V<br>W<br>Y<br>H<br>O<br>Z<br>X | | | | | | | | 7" Graphical display, USB front port & programmable pushbuttons - Multi-Language (FW 7.6x or higher)<br>Vertical Front Panel with English Display<br>Enhanced German Front Panel<br>Enhanced German Front Panel with User-Programmable Pushbuttons<br>Enhanced English Front Panel<br>Enhanced English Front Panel with User-Programmable Pushbuttons<br>Enhanced French Front Panel<br>Enhanced French Front Panel with User-Programmable Pushbuttons<br>Enhanced Russian Front Panel<br>Enhanced Russian Front Panel with User-Programmable Pushbuttons<br>Enhanced Chinese Front Panel<br>Enhanced Chinese Front Panel with User-Programmable Pushbuttons<br>Enhanced Turkish Front Panel<br>Enhanced Turkish Front Panel with User-Programmable Pushbuttons<br>Enhanced Polish Front Panel[3]<br>Enhanced Polish Front Panel with User-Programmable Pushbuttons[3]<br>Enhanced Japanese Front Panel[3]<br>Enhanced Japanese Front Panel with User-Programmable Pushbuttons[3] |
| Power Supply[2] | | | | | | H<br>H<br>L | | | | | | RH | 125 / 250 V AC/DC<br>125/250 V AC/DC with redundant 125/250 V AC/DC<br>24 - 48 V (DC only) |
| CT/VT DSP | | | | | | | 8L<br>8M<br>8N<br>8R | | 8L<br>8M<br>8N<br>8R | | | | Standard 4CT/4VT w/ enhanced diagnostics<br>Sensitive Ground 4CT/4VT w/ enhanced diagnostics<br>Standard 8CT w/ enhanced diagnostics<br>Sensitive ground 8CT w/ enhanced diagnostic |
| IEC 61850 Process Bus[4, 5] | | | | | | | | 81<br>85<br>86<br>87 | | | | | 8 Port IEC 61850 Process Bus Module<br>-9-2LE & 61869 Process Bus, 2 × 1000BaseF<br>-9-2LE & 61869 Process Bus, 4 × 1000BaseF + 4 × 100BaseFx<br>-9-2LE & 61869 Process Bus, 4 × 100BaseFx |
| Digital I/O | | | | | | | XX<br>4A<br>4C<br>4D<br>4L<br>67<br>6C<br>6D<br>6E<br>6F<br>6K<br>6L<br>6M<br>6N<br>6P<br>6R<br>6S<br>6T<br>6U<br>6V<br>6W<br>6X | XX<br>4A<br>4C<br>4D<br>4L<br>67<br>6C<br>6D<br>6E<br>6F<br>6K<br>6L<br>6M<br>6N<br>6P<br>6R<br>6S<br>6T<br>6U<br>6V<br>6W<br>6X | XX<br>4A<br>4C<br>4D<br>4L<br>67<br>6C<br>6D<br>6E<br>6F<br>6K<br>6L<br>6M<br>6N<br>6P<br>6R<br>6S<br>6T<br>6U<br>6V<br>6W<br>6X | XX<br>4A<br>4C<br>4D<br>4L<br>67<br>6C<br>6D<br>6E<br>6F<br>6K<br>6L<br>6M<br>6N<br>6P<br>6R<br>6S<br>6T<br>6U<br>6V<br>6W<br>6X | XX<br>4A<br>4C<br>4D<br>4L<br>67<br>6C<br>6D<br>6E<br>6F<br>6K<br>6L<br>6M<br>6N<br>6P<br>6R<br>6S<br>6T<br>6U<br>6V<br>6W<br>6X | XX No Module<br>4A 4 Solid State (No Monitoring) MOSFET Outputs<br>4C 4 Solid State (Current w/opt Voltage) MOSFET Outputs<br>4D 16 Digital Inputs with Auto-Burnish<br>4L 14 Form-A (No Monitoring) Latchable Outputs<br>67 8 Form-A (No Monitoring) Outputs<br>6C 8 Form-C Outputs<br>6D 16 Digital Inputs<br>6E 4 Form-C Outputs, 8 Digital Inputs<br>6F 8 Fast Form-C Outputs<br>6K 4 Form-C & 4 Fast Form-C Outputs<br>6L 2 Form-A (Current w/ opt Voltage) & 2 Form-C Outputs, 8 Digital Inputs<br>6M 2 Form-A (Current w/ opt Voltage) & 4 Form-C Outputs, 4 Digital Inputs<br>6N 4 Form-A (Current w/ opt Voltage) Outputs, 8 Digital Inputs<br>6P 6 Form-A (Current w/ opt Voltage) Outputs, 4 Digital Inputs<br>6R 2 Form-A (No Monitoring) & 2 Form-C Outputs, 8 Digital Inputs<br>6S 2 Form-A (No Monitoring) & 4 Form-C Outputs, 4 Digital Inputs<br>6T 4 Form-A (No Monitoring) Outputs, 8 Digital Inputs<br>6U 6 Form-A (No Monitoring) Outputs, 4 Digital Inputs<br>6V 2 Form-A (Cur w/ opt Volt) 1 Form-C Output, 2 Latching Outputs, 8 Digital Inputs<br>6W 30 Contact Inputs - Pin Terminals[3]<br>6X 18 Form-A (No Monitoring) Outputs - Pin Terminals[3] |
| Transducer I/O | | | | | | | 5C<br>5E<br>5F | 5C<br>5E<br>5F | 5C<br>5E<br>5F | 5C<br>5E<br>5F | 5C<br>5E<br>5F | | 5C 8 RTD Inputs<br>5E 4 dcmA Inputs, 4 RTD Inputs<br>5F 8 dcmA Inputs |
| Inter-Relay Communications | | | | | | | | | | | | | 7B 1300 nm, multimode, LED, 1 Channel<br>7C 1300 nm, singlemode, ELED, 1 Channel<br>7H 820 nm, multimode, LED, 2 Channels<br>7I 1300 nm, multimode, LED, 2 Channels<br>7J 1300 nm, singlemode, ELED, 2 Channels<br>7S G.703, 2 Channels<br>7W RS422, 2 Channels<br>76 IEEE C37.94, 820 nm, multimode, LED, 1 Channel<br>77 IEEE C37.94, 820 nm, multimode, LED, 2 Channel<br>2A C37.94SM, 1300nm singlemode, ELED, 1 Channel singlemode<br>2B C37.94SM, 1300nm singlemode, ELED, 2 Channel singlemode |

**Ordering Notes:**

1. Redundant power supply only available in horizontal unit. If redundant is chosen, must be same type. Maximum 2 per chassis
2. Option available soon
3. Process bus module requires empty slots next to it
4. Conventional DSP and Process Bus modules cannot run simultaneously

For more information, visit
**gevernova.com/grid-solutions**

IEC is a registered trademark of Commission Electrotechnique Internationale. IEEE is a registered trademark of the Institute of Electrical Electronics Engineers, Inc. Modbus is a registered trademark of Schneider Automation. NERC is a registered trademark of North American Electric Reliability Council. NIST is a registered trademark of the National Institute of Standards and Technology.

GE Vernova reserves the right to make changes to specifications of products described at any time without notice and without obligation to notify any person of such changes.

© 2025 GE Vernova and/or its affiliates. All rights reserved. GE and the GE Monogram are trademarks of General Electric Company used under trademark license.

GEA-12757M(EN)
English
251001

GE VERNOVA