Grid Solutions

DT1-245P 63

Dead Tank Circuit Breaker for 245 kV and 63 kA

GE Vernova's dead tank circuit breakers help to ensure network reliability and safety in high voltage substations. The DT1-245P 63 is applicable for ratings up to 245 kV and 63 kA without TRV capacitors for short line faults.

Advanced Switchgear Technology

The interrupter chamber technology utilizes GE Vernova's self-blast principle which is field-proven with over 30 years of service experience. This proven technology dramatically reduces the mechanical stress in the chamber, enabling a higher interrupting capability with a lower operational energy requirement.

This reduced energy requirement allows the utilization of the highly reliable FK3 spring- spring-operated mechanism. The combination of the field-proven mechanism and interrupter technology results in a significant reduction of reaction forces, thus reducing foundation design requirements.

The breaker is available for single-pole operation (IPO) or for three-pole gang operation. Standard application for low environment temperatures is -30°C without any heating systems. By utilizing tank heaters, the DT1-245P 63 can be installed in regions with temperatures as low as -60°C.

Certified Quality

GE Vernova designs, manufactures, tests and delivers its circuit breakers in accordance with the latest IEEE/ANSI and IEC standards, maintaining a quality assurance system according to ISO 9001 and ISO 14001 certifications. The global center of excellence for dead tank circuit breakers, including manufacturing and testing facilities, is located in Charleroi, PA (USA).

GE Vernova is an industry leader in SF_6 gas tightness testing technology including seals, casting and plumbing systems. Each breaker is factory tested using our proprietary gas tightness testing system, which provides measurable, quantifiable test results on the breaker in its fully assembled, as-shipped condition.

Simplified Installation and Low Maintenance

The DT1-245P 63 breaker is factory-tested and prepared for truck shipment with bushings assembled and prefilled with slight SF_6 gas precharge. Therefore the on-site installation needs only a few simple steps without requiring any special tools.

GE Vernova's dead tank circuit breakers have very low maintenance costs and requirements, due to an engineering and design philosophy that has focused on these key needs since the inception of the development process.

GE VERNOVA



Field-Proven Reliability

- Advanced self-blast interrupters
- Leak-resistant single piece cast aluminum enclosures
- Durable low energy spring-spring-operated mechanisms
- Three-pole gang operation or independent pole operation (IPO)
- More than 120,000 circuit breakers with self-blast interrupters and spring-spring- operated mechanisms in service since 1989

Superior Manufacturing

- ISO-certified processes to ensure quality
- High degree of US domestic content, which can help to facilitate compliance with national requirements
- Rigorous testing for reliable performance according to latest international standards
- SF_6 gas tightness testing system validates gas leakage rate guarantee

Low Maintenance and Local Expertise

- Fast and simplified on-site installation
- Complete monitoring system available for asset management and digital substation integration
- Local technical support, consulting and training from real circuit breaker experts

Dimensions in mm [in]

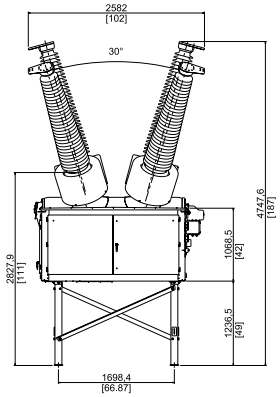

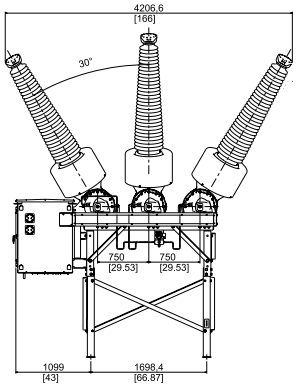

Three-pole gang operation

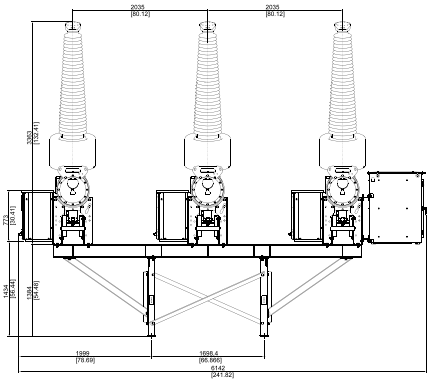

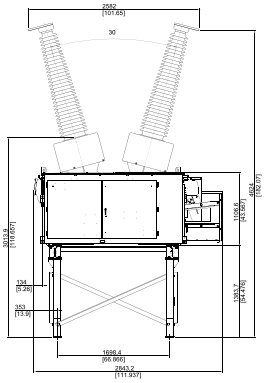

Independent pole operation

Ratings

IEEE/ANSI	IEC	VALUE	UNITS
Rated maximum voltage	Rated voltage	245	kV
Rated power frequency	Rated frequency	60 / 50	Hz
Dry withstand	At power frequency, dry	425 / 460	kV
Rated lightning impulse withstand voltage	At lightning impulse	900 / 1,050	kV
Rated chopped wave impulse voltage 2us		1,160	kV
Rated continuous current	Rated normal current	3,00 / 4,000 / 5,000	A
Rated short-circuit current	Rated short-circuit breaking current	63	kA
Rated closing, latching and short time carrying		164	kA
	Rated short-circuit making current	164	kA
Rated capacitance switching*		164	kA
Rated interrupting time		2 / 3	cycles
	Rated break time	33 / 50	ms
Rated standard operating duty	Rated operating sequence	O-0.3s-CO-15s-CO	

**Ratings available upon request.*
***Contact Grid Solutions for special purpose, operating voltage, generator synchronizing, high TRV, high X/R or other rating requirements.*

TECHNICAL DATA	VALUE	UNITS
Ambient temperature range*	-30 to +40	°C
Seismic withstand in accordance with IEEE 693-2018		
Creepage distance	168 / 4,257	inches / mm
Closing resistor (optional)		
Weight (without CT)	8,015 / 3,643 (GO) and 8,894 / 4,043 (IPO)	lbs / kg
Weight of SF_6	143 / 65	lbs / kg

**Alternative values available upon request.*

Gas Data

The functioning of this equipment relies upon SF_6, a fluorinated greenhouse gas.

	SF_6
Average mass of gas/mixture in the equipment (kg)*	87.5
GWP_{100} of gas/mixture (CO_2-equivalent)	24,300
CO_2-eq of gas/mixture in the equipment ($t_{co2\text{-}eq}$)*	2,126.3

** For information purposes only. It varies depending on the equipment considered.*

For more information, visit
gevernova.com/grid-solutions

GE Vernova reserves the right to make changes to specifications of products described at any time without notice and without obligation to notify any person of such changes.

© 2025 GE Vernova and/or its affiliates. All rights reserved. GE and the GE Monogram are trademarks of General Electric Company used under trademark license.

GEA-N50289
English
250925

GE VERNOVA