GE
Grid Solutions



Multilin™ L60

Sub-Cycle Phase Comparison and Distance Protection

The Multilin L60 is an advanced sub-cycle phase comparison relay intended for application on overhead transmission lines, including series compensated lines, and underground cables of different voltage levels. Two and three-terminal lines can be protected easily by interfacing to new or existing power line carrier equipment. The Multilin L60 also has built-in interfaces to support communication channels of various types between line terminals.

Part of the Universal Relay (UR) family, the Multilin L60 comes with a variety of versatile features, truly integrating protection, monitoring, metering, communication and control in one easy-to-use device. The UR family offers a high degree of modularity in its design and functionality, providing superior performance in protection and control, while meeting the toughest requirements of the marketplace.

Key Benefits

- Fast and secure phase comparison protection with a typical tripping time of ¾ of a power cycle
- End-to-end communication over power line carrier provides cost-effective solution
- Advanced algorithms for channel noise immunity, accurate per-channel signal asymmetry, charging current compensation and channel delay compensation
- Advanced IEC 61850 Ed. 2 certified implementation, and complete settings via SCL files enable resource and platform managing optimization and reduce cost of ownership
- Routable GOOSE (R-GOOSE) enables customer to send GOOSE messages beyond the substation, which enables WAPC and more cost effective communication architectures for wide area applications
- CyberSentry™ provides high-end cyber security aligned to industry standards and services (NERC® CIP, AAA, Radius, RBAC, Syslog)
- Advanced fault and disturbance recording, including internal relay operating signals, eliminating the need for external recording devices
- Supports IEEE C37.111-1999/2013, IEC 60255-24 Ed 2.0 COMTRADE standard

Applications

- Short and long overhead lines and cables of different voltage levels
- Suitable for two and three-terminal lines
- Circuits with tapped transformer feeders
- Implicit Direct Transfer Trip (DTT) for breaker failure applications

imagination at work

Protection and Control

- Single or dual-phase comparison with permissive and blocking schemes
- Multiple phase, ground, neutral and negative sequence instantaneous and timed overcurrent elements
- 3-Zone phase and ground distance elements
- Phase & negative sequence directional overcurrent, neutral directional with dual polarity criteria and thermal overload
- Single-pole, dual breaker autoreclose with synchronism check

Advanced Communications

- 3 independent Fiber or Copper Ethernet ports for simultaneous & dedicated network connections with IEEE 1588 support
- Supported industry protocols: IEC 61850 Ed. 2, SFTP, MMS File Transfer Service, DNP 3.0, Modbus Serial/TCP, IEEE 1588, IEC 60870-5-104 and 103, PRP, SNTP, HTTP, TFTP

Cyber Security

- CyberSentry™ provides high-end cyber security aligned to industry standards and services (NERC® CIP, AAA, Radius, RBAC, Syslog)

Monitoring & Metering

- Breaker condition monitoring including breaker arcing current (I2t) and trip counter
- Fault locator
- Advanced recording capabilities with high-capacity event recorder, configurable and extended waveform capture and data logger
- Supports IEEE C37.111-1999/2013, IEC 60255-24 Ed 2.0 COMTRADE standard

Protection and Control

As part of the UR family of Protection & Control devices, the Multilin L60 Line Phase Comparison System offers a high degree of modularity in its design and functionality, providing superior performance while meeting the toughest requirements of the marketplace.

Advanced protection and control features of this relay includes:

Phase Comparison

The phase comparison function can be used for protecting two or three-terminal lines including terminals with breaker-and-a-half configurations. The L60 can be configured for single or dual-phase comparison schemes according to the communication equipment employed, requirements of trip speed and reliability. The L60 combines the advantages of the modern digital relay with the traditional analog phase comparison principle. Pulses received are digitally sampled at 64 samples per cycle, providing excellent resolution. Channel asymmetry settings can adjust distorted received pulses, including those that are not equal to half a sine wave. All phase comparison signals are captured and available in oscillography for commissioning, troubleshooting, and analysis purposes.

L60 - Protection, Metering, Monitoring and Control

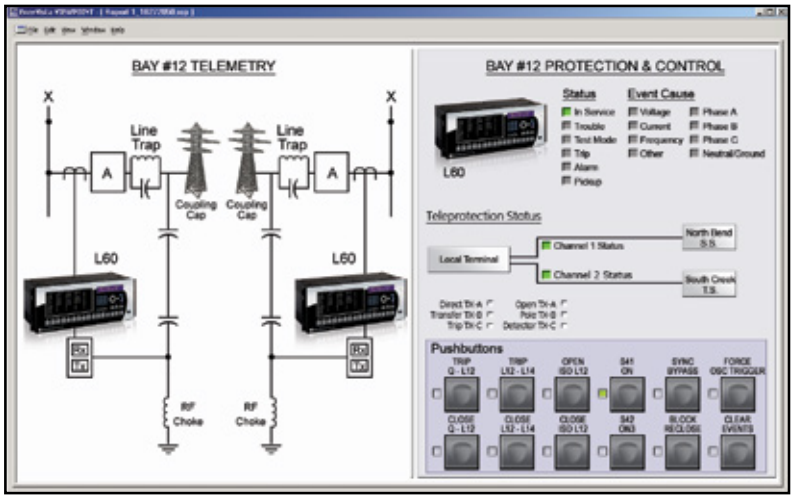

The L60 is the single point for protection, control, metering, and monitoring in one integrated device that can easily be connected directly into DCS or SCADA monitoring and control systems.

Fault Detectors

The L60 employs multiple fault detectors to initiate phase comparison and ensures that all fault types are detected quickly and reliably.

Functional Block Diagram

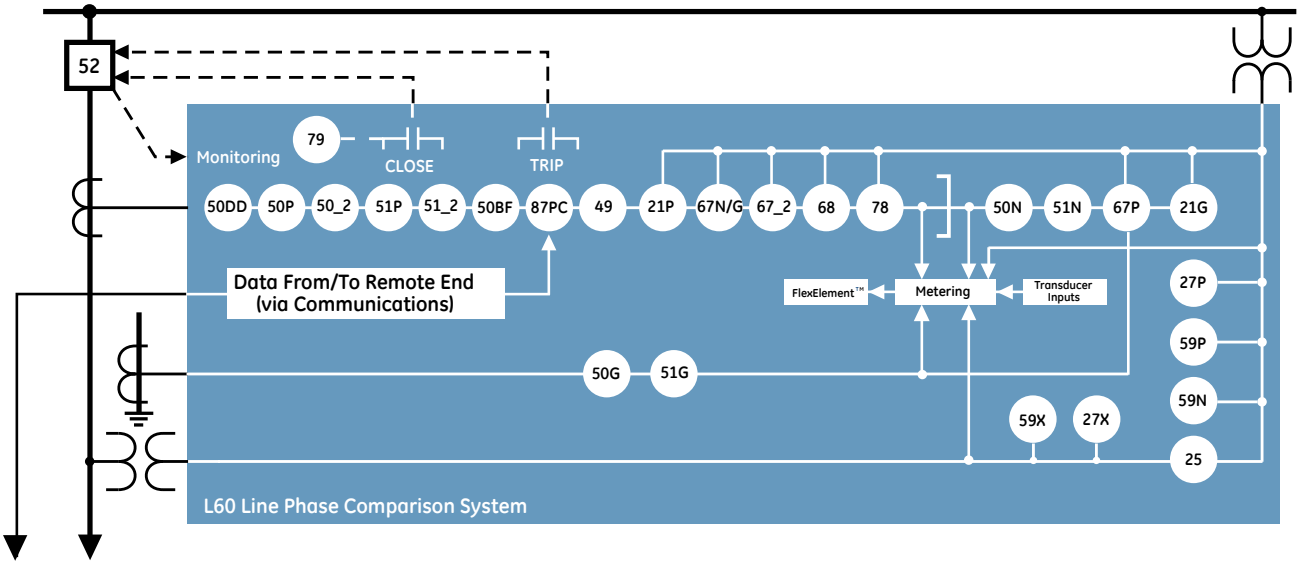

ANSI® Device Numbers & Functions

DEVICE NUMBER	FUNCTION
21G	Phase Distance
21P	Ground Distance
25	Synchrocheck
27P	Phase Undervoltage
27X	Auxiliary Undervoltage
32N	Wattmetric Zero-Sequence Directional
49	Thermal Overload
50BF	Breaker Failure
50DD	Current Disturbance Detector
50G	Ground Instantaneous Overcurrent

DEVICE NUMBER	FUNCTION
50N	Neutral Instantaneous Overcurrent
50P	Phase Instantaneous Overcurrent
50_2	Negative Sequence Instantaneous Overcurrent
51G	Ground Time Overcurrent
51N	Neutral Time Overcurrent
51P	Phase Time Overcurrent
51_2	Negative Sequence Time Overcurrent
52	AC Circuit Breaker
59N	Neutral Overvoltage
59P	Phase Overvoltage

DEVICE NUMBER	FUNCTION
59X	Auxiliary Overvoltage
67N	Neutral Directional Overcurrent
67P	Phase Directional Overcurrent
67_2	Negative Sequence Directional Overcurrent
68	Power Swing Blocking
78	Out-of-Step Tripping
79	Autoreclose
87PC	Phase Comparison

- Overcurrent starters based on low and high set overcurrent elements.
- Negative-sequence overvoltage element starter meant to detect faults under weak system conditions.
- Rate of change of the negative-sequence current element to detect faults under load unbalance such as on un-transposed high voltage transmission lines or in a vicinity of electrical traction systems causing significant negative-sequence current unbalance.
- Rate of change of the positive-sequence current element to detect three-phase balance faults under high load conditions.

All fault detectors operate independently from each other and each detector supports low and high setting levels to facilitate starting and supervise tripping.

Charging Current Compensation

For long transmission lines and underground cables, the charging current may be large and result in excessively high pickup settings. The L60 can dynamically compensate for the line charging current thus increasing its sensitivity to the fault current on long transmission lines.

Open Breaker Echo

The open breaker echo feature enables proper operation of the phase comparison scheme for an internal fault during a terminal open condition or weak infeed at one end of the faulted line.

Signaling Channel

Typical channels used for the communications link between two or three L60s include AM and FSK Power Line Carrier (PLC), FSK microwave, and multiplexed fiber optic. The L60 features excellent stability during channel noise due to the high sampling rate of the received signal, and the unique integrator makes the digital phase-comparison relay fully equivalent to analog phase comparison relays.

Line Pickup (Switch-on-to-Fault)

The line pickup feature uses a combination of undercurrent and undervoltage to identify a line that has been de-energized (line end open). Three instantaneous overcurrent elements are used to identify a previously de-energized line that has been closed on to a fault.

Distance Protection

Separate high-speed phase and ground distance elements are provided for optimal supervision with tapped transformers and as backup during channel failures or unavailability. The backup distance functions in the L60 come with three zones of phase and ground distance (mho or quad). Dual distance algorithms deliver exceptional security and speed performance to ensure average operating times of 1.5 cycles for 75% line reach and SIR 30, and <2.5 cycles for 90% line reach and SIR 60. The phase distance elements come with built-in in-zone transformer compensation. The L60 also provides a load encroachment element, which supervises the distance elements under heavy line loading conditions.

Undervoltage and Overvoltage Protection

Long lines under lightly loaded or no-load conditions may experience voltages exceeding rated per unit voltage level of the line. Use the three-phase overvoltage elements of the L60 to initiate a local trip as well as a remote trip. The L60 also provides additional voltage functions including neutral overvoltage, negative sequence overvoltage and phase undervoltage.

Overcurrent Functions

The L60 provides thermal overload and overcurrent functions for phase, neutral and ground, which can run parallel with the primary phase compensation element or can be programmed to provide primary protection under conditions when the phase compensation element is not available.

- Instantaneous and timed overcurrent elements for phase, neutral, ground and negative sequence protection
- Directional supervision is available for phase neutral and negative sequence elements
- Time O/C elements can individually be set to use IEEE, IEC or user-defined FlexCurves™ for best coordination

Single-Pole Tripping

The L60 relay uses a state-of- the-art dual phase selection algorithm that provides fast and accurate fault type identification even under weak infeed conditions.

Autoreclosing

The L60 provides multi-shot autoreclosing (up to 4 shots) for single or three-pole autoreclose on all types of faults with independent settings for each shot. Any of the autoreclose elements can be dynamically blocked or unblocked by other elements or user logic. This way they can be coordinated with the L60 protection setting groups. Four different autoreclose operation modes are available, enabling users to select the reclosing mode best-suited to specific applications.

Synchronism Check

The L60 provides six synchrocheck elements that monitor voltage difference, phase angle difference and slip frequency taking the CB closing time into account to ensure proper breaker closure as per user requirements. The L60 provides additional enhancements in synchronizing by the detection of dead source conditions for synchronism bypass under these conditions.

Multiple Breaker

The L60 supports multi-breaker busbar configurations such as breaker-and-a-half or ring bus arrangements, providing dual breaker autoreclose, dual synchrocheck elements, and dual independent breaker failure elements. The design provides secure operation during external faults with possible CT saturation.

Breaker Failure

The L60 is able to provide fully independent breaker failure protection for the breakers associated with a line when connected to a substation that has a breaker-and-a-half or ring bus arrangement. The L60 provides the required elements to perform two independent breaker failure functions.

Advanced Automation

The L60 incorporates advanced automation features including powerful FlexLogic programmable logic, communication, and SCADA capabilities that far surpass what is found in the average line differential relay. The L60 integrates seamlessly with other UR relays for complete system protection.

FlexLogic

FlexLogic is the powerful UR-platform programming logic engine that provides the ability to create customized protection and control schemes, minimizing the need and associated costs of, auxiliary components and wiring. With 1024 lines of FlexLogic, the L60 can be programmed to provide the required tripping logic along with custom scheme logic for line breaker control and interlocking transfer tripping schemes for remote breakers and dynamic setting group changes.

Scalable Hardware

The L60 is available with a multitude of I/O configurations to suit the most demanding application needs. The expandable modular design allows for easy configuration and future upgrades.

- Flexible, modular I/O covering a broad range of input signals and tripping schemes
- Types of digital outputs include trip-rated Form-A and Solid State Relay (SSR) mechanically latching, and Form-C outputs
- Form-A and SSR outputs available with optional circuit continuity monitoring and current detection to verify continuity and health of the associated circuitry
- Mechanically latching outputs can be used to develop secure interlocking applications and replace electromechanical lockout relays
- DCmA inputs are available to monitor line temperature

Monitoring and Metering

The L60 includes high accuracy metering and recording for all AC signals. Voltage, current, and power metering are built into the relay as a standard feature. Current and voltage parameters are available as total RMS magnitude, and as fundamental frequency magnitude and angle.

Fault and Disturbance Recording

The advanced disturbance and event recording features within the L60 can significantly reduce the time needed for postmortem analysis of power system events and the creation of regulatory reports. Recording functions include:

- Sequence of Event (SOE)
  - 1024 time stamped events
- Oscillography
  - Supports IEEE C37.111-1999/2013, IEC 60255-24 Ed 2.0 COMTRADE standard
  - 64 digital & up to 40 analog channels
  - Events with up to 45s length
- Data Logger and Disturbance Recording
  - 16 channels up to 1 sample/cycle/channel
- Fault Reports
  - Powerful summary report of pre-fault and fault values

The very high sampling rate and large amount of storage space available for data recording in the L60 can eliminate the need for installing costly stand-alone recording equipment.

Advanced Device Health Diagnostics

The L60 performs comprehensive device health diagnostic tests at startup and continuously during run-time to test its own major functions and critical hardware. These diagnostic tests monitor for conditions that could impact security and availability of protection, and present device status via SCADA communications and front panel display. Providing continuous monitoring and early detection of possible issues help improve system uptime.

- Comprehensive device health diagnostic performed at startup
- Monitors the CT/VT input circuitry to validate the integrity of all signals

Cyber Security – CyberSentry UR

CyberSentry UR enabled UR devices deliver full cyber security features that help customers to comply with NERC CIP and NIST® IR 7628 cyber security requirements.

This software option delivers the following core features:

Power System Troubleshooting

The L60 contains many tools and reports that simplify and reduce the amount of time required for troubleshooting power system events.

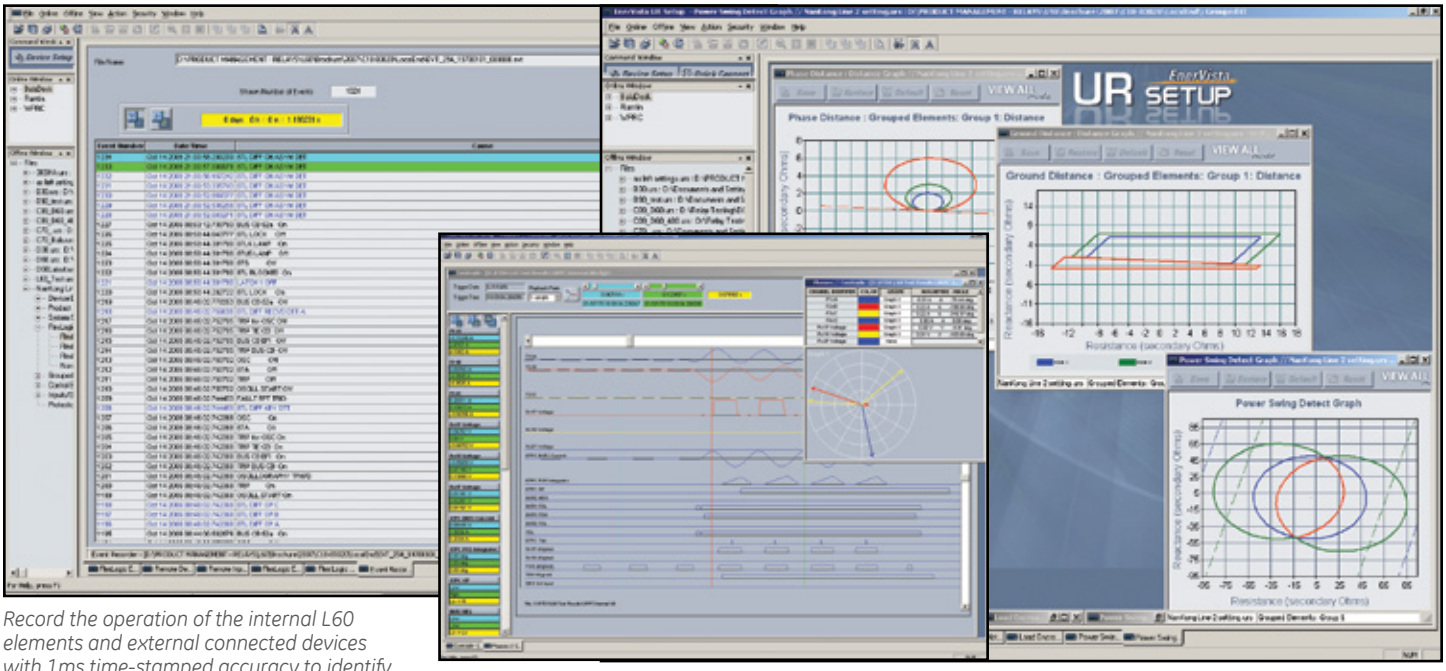

Record the operation of the internal L60 elements and external connected devices with 1ms time-stamped accuracy to identify the Sequence of Operation of station devices during line faults and disturbances.

Analyze line faults using both analog and digital power system quantities that are measured and recorded up to a rate of 64 samples per cycle.

Graphically view zone settings for ground phase distance elements for the selected zones and the power swing detection element.

AAA Server Support (Radius/LDAP)

Enables integration with centrally managed authentication and accounting of all user activities and uses modern industry best practices and standards that meet and exceed NERC CIP requirements for authentication and password management.

Role Based Access Control (RBAC)

Efficiently administrate users and roles within UR devices. The new and advanced access functions allow users to configure up to five roles for up to eight configurable users with independent passwords. The standard "Remote Authentication Dial In User Service" (Radius) is used for authentication.

Event Recorder (Syslog for SEM)

Capture all cyber security related events within a SOE element (login, logout, invalid password attempts, remote/local access, user in session, settings change, FW update, etc), and then serve and classify data by security level using standard Syslog data format. This will enable integration with established SEM (Security Event Management) systems.

Communications

The L60 provides for secure remote data and engineering access, making it easy and flexible to use and integrate into new and existing infrastructures. Fiber optic Ethernet provides high-bandwidth communications allowing for low-latency controls and high-speed file transfers of relay fault and event record information. The available three independent Ethernet ports, redundant Ethernet option and the embedded managed Ethernet switch provide the means to create fault tolerant communication architectures in an easy, cost-effective manner. The L60 supports the most popular industry standard protocols enabling easy, direct integration into monitoring and SCADA systems.

- IEC 61850 Ed. 2 with 61850-9-2 support
- DNP 3.0 (serial & TCP/IP)
- Ethernet Global Data (EGD)
- IEC 60870-5-103 and IEC 60870-5-104
- Modbus RTU, Modbus TCP/IP
- HTTP, TFTP, SFTP and MMS file transfer
- SNTP and IEEE 1588 for time synchronization
- PRP as per IEC 62439-3
- Supports Routable GOOSE (R-GOOSE)

Transmission Line Status Monitoring

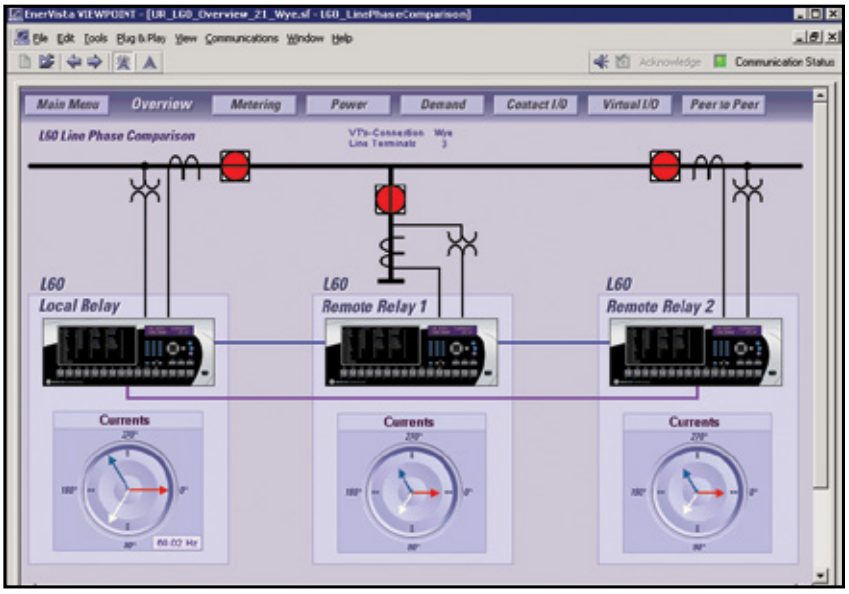

Monitor each L60 individually using the easy-to-use Viewpoint Monitoring HMI.

Interoperability with Embedded IEC 61850 Edition 2

The new IEC 61850 implementation in the UR Family positions GE as an industry leader in this standard.

- Implements Edition 2 of the standard across the entire family of UR devices
- Provides full relay setting management via standard SCL files (ICD, CID and IID)
- Enables automated relay setting management using 3rd party tools through standard file transfer services (MMS and SFTP)
- Increases the number of Logical Devices and data mapped to them, GOOSE messages from up to 64 remote devices, and reports to support different organizational needs for data transfer and reduce dependency on generic logical nodes
- Configures GE Systems based on IEC 61850 using universal 3rd party tools
- R-GOOSE enable customer to send GOOSE messages beyond the substation, which enables WAPC and more cost effective communication architectures for wide area applications

Direct I/O Messaging

Direct I/O allows for the sharing of high-speed digital information between multiple UR relays via direct back-to-back connections or multiplexed through a standard DS0 multiplexer channel bank. Regardless of the connection method, direct I/O provides continuous real-time channel monitoring that supplies diagnostics information on channel health.

Direct I/O provides superior relay-to-relay communications that can be used in advanced interlocking, generation rejection and other special protection schemes.

- Communication with up to 16 UR relays in single or redundant rings rather than strictly limited to simplistic point-to-point configurations between two devices
- Connect to standard DS0 channel banks through standard RS422, G.703 or IEEE C37.94 interfaces or via direct fiber optic connections
- No external or handheld tester required to provide channel diagnostic information

LAN Redundancy

Substation LAN redundancy has been traditionally accomplished by reconfiguring the active network topology in case of failure. Regardless of the type of LAN architecture (tree, mesh, etc), reconfiguring the active LAN requires time to switchover, during which the LAN is unavailable. UR devices deliver redundancy as specified by PRP-IEC 62439-3, which eliminates the dependency on LAN reconfiguration and the associated switchover time. The UR becomes a dual attached node that transmits data packets over both main and redundant networks simultaneously, so in case of failure, one of the data packets will reach the receiving device with no time delay.

Multi-Language

UR devices support multiple languages: English, French, Russian, Chinese, Turkish and German. These language options are available on the front panel, in the EnerVista setup software, and in the product manuals. Easily switch between English and an additional language on the local displays without uploading new firmware.

EnerVista Software

The EnerVista suite is an industry-leading set of software programs that simplifies every aspect of using the L60 relay. The EnerVista suite provides all the tools to monitor the status of the protected asset, maintain the relay, and integrate information measured by the L60 into DCS or SCADA monitoring systems. Convenient COMTRADE and SOE viewers are an integral part of the UR setup software included with every UR relay, to carry out postmortem event analysis and ensure proper protection system operation.

EnerVista Launchpad

EnerVista Launchpad is a powerful software package that provides users with all of the setup and support tools needed for configuring and maintaining GE Multilin products. The setup software within Launchpad allows for the configuration of devices in real-time by communicating using serial, Ethernet, or modem connections, or offline by creating setting files to be sent to devices at a later time. Included in Launchpad is a document archiving and management system that ensures critical documentation is up-to-date and available when needed. Documents made available include:

- Manuals
- Application Notes
- Guideform Specifications
- Brochures
- Wiring Diagrams
- FAQ's
- Service Bulletins

Viewpoint Monitoring

Viewpoint Monitoring is a simple-to-use and full-featured monitoring and data recording software package for small systems. Viewpoint Monitoring provides a complete HMI package with the following functionality:

- Plug-&-Play Device Monitoring
- System Single-Line Monitoring & Control
- Annunciator Alarm Screens
- Trending Reports
- Automatic Event Retrieval
- Automatic Waveform Retrieval

Viewpoint UR Engineer

Viewpoint UR Engineer is a set of powerful tools that allows the configuration and testing of GE relays at a system level in an easy-to-use graphical drag-and-drop environment. Viewpoint UR Engineer provides the following configuration and commissioning utilities:

- Graphical Logic Designer
- Graphical System Designer
- Graphical Logic Monitor
- Graphical System Monitor

Viewpoint Maintenance

Viewpoint Maintenance provides tools that will create reports on the operating status of the relay, simplify the steps to download fault and event data, and reduce the work required for cyber security compliance audits. Tools available in Viewpoint Maintenance include:

- Settings Security Audit Report
- Device Health Report
- Single-Click Fault Data Retrieval

EnerVista Integrator

EnerVista Integrator is a toolkit that allows seamless integration of GE Multilin devices into new or existing automation systems. Included in EnerVista Integrator is:

- OPC/DDE Server
- GE Multilin Drivers
- Automatic Event Retrieval
- Automatic Waveform Retrieval

User Interface

The L60 front panel provides extensive local HMI capabilities. The local display is used for monitoring, status messaging, fault diagnosis, and device configuration. User-configurable messages that combine text with live data can be displayed when user-defined conditions are met.

Security Audit

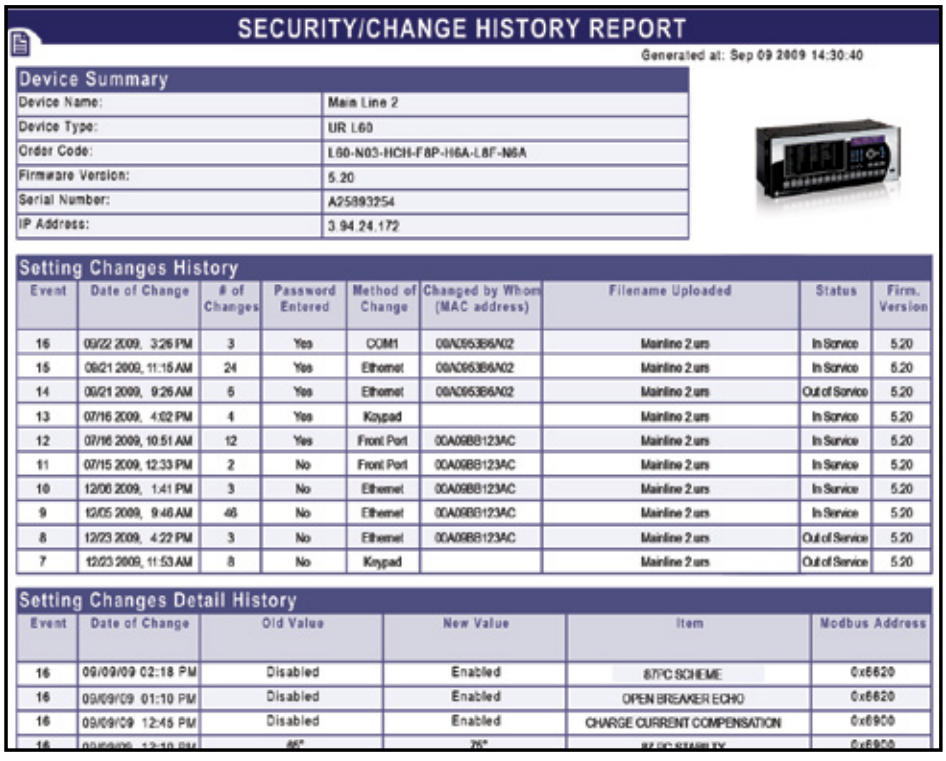

SECURITY/CHANGE HISTORY REPORT

Generated at: Sep 09 2009 14:30:40

Device Summary

Device Name:	Main Line 2
Device Type:	UR L60
Order Code:	L60-N03-HCH-F8P-H6A-L8F-N6A
Firmware Version:	5.20
Serial Number:	A25893254
IP Address:	3.94.24.172

Setting Changes History

Event	Date of Change	# of Changes	Password Entered	Method of Change	Changed by Whom (MAC address)	Filename Uploaded	Status	Firm. Version
16	09/22 2009, 3:26 PM	3	Yes	COM1	00A0B3B6A02	Mainline 2.urs	In Service	5.20
15	09/21 2009, 11:15 AM	24	Yes	Ethernet	00A0B3B6A02	Mainline 2.urs	In Service	5.20
14	09/21 2009, 9:26 AM	6	Yes	Ethernet	00A0B3B6A02	Mainline 2.urs	Out of Service	5.20
13	07/16 2009, 4:02 PM	4	Yes	Keypad		Mainline 2.urs	In Service	5.20
12	07/16 2009, 10:51 AM	12	Yes	Front Port	00A09BB123AC	Mainline 2.urs	In Service	5.20
11	07/15 2009, 12:33 PM	2	No	Front Port	00A09BB123AC	Mainline 2.urs	In Service	5.20
10	12/08 2009, 1:41 PM	3	No	Ethernet	00A09BB123AC	Mainline 2.urs	In Service	5.20
9	12/05 2009, 9:46 AM	46	No	Ethernet	00A09BB123AC	Mainline 2.urs	In Service	5.20
8	12/03 2009, 4:22 PM	3	No	Ethernet	00A09BB123AC	Mainline 2.urs	Out of Service	5.20
7	12/03 2009, 11:53 AM	8	No	Keypad		Mainline 2.urs	Out of Service	5.20

Setting Changes Detail History

Event	Date of Change	Old Value	New Value	Item	Modbus Address
16	09/09/09 02:18 PM	Disabled	Enabled	87PC SCHEME	0x6620
16	09/09/09 01:10 PM	Disabled	Enabled	OPEN BREAKER ECHO	0x6620
16	09/09/09 12:45 PM	Disabled	Enabled	CHARGE CURRENT COMPENSATION	0x6900

Access the security report of L60 to audit the changes made to the settings or configurations.

Typical Wiring

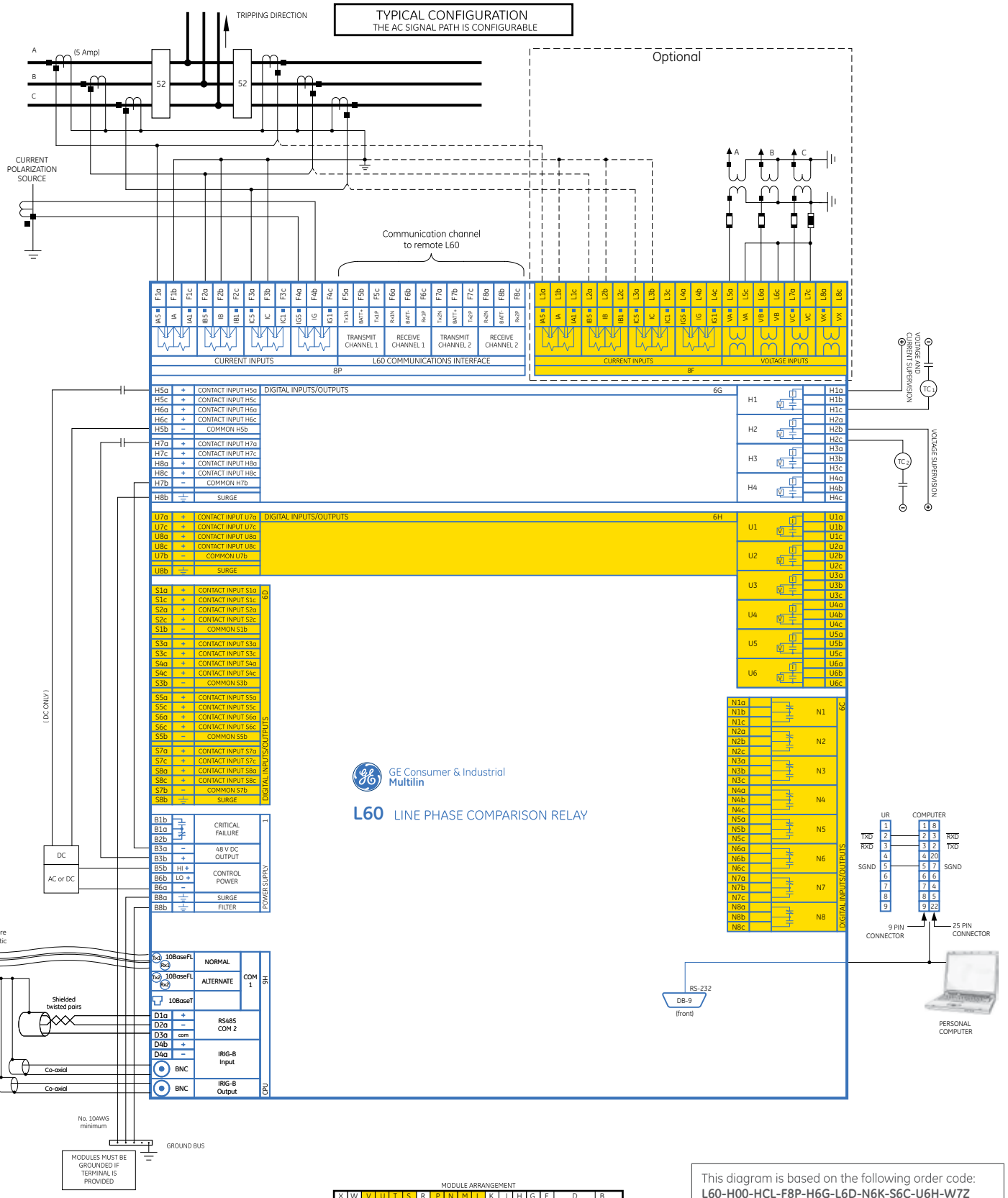

This diagram is based on the following order code:
L60-H00-HCL-F8P-H6G-L6D-N6K-S6C-U6H-W7Z
This diagram provides an example of how the device is wired, not specifically how to wire the device. Please refer to the Instruction Manual for additional details on wiring based on various configurations.

Ordering

L60 -	*	00	- H	*	-	F ** -	H **	- L **	-N **	- S **	-U **	- W/X	**	For Full Sized Horizontal Mount
Base Unit	L60													Base Unit
CPU	E													RS485 + RS485 (IEC 61850 option not available)
	J													RS485 + multimode ST 100BaseFX
	K													RS485 + multimode ST Redundant 100BaseFX
	N													RS485 + 10/100 BaseT
	T													RS485 + three multimode SFP LC 100BaseFX. Req FW v7xx or higher
	U													RS485 + two multimode SFP LC 100BaseFX + one SFP RJ45 100BaseT. Req FW v7xx or higher
	V													RS485 + three SFP RJ45 100BaseT. Req FW v7xx or higher
Software (see note 1 below)		00												No Software Options
		03												IEC 61850
		A0												CyberSentry UR Lvl 1. Req UR FW 7.xx or higher
		B0												IEEE 1588. Req UR FW 7.xx or higher
		C0												PRP
		D0												IEEE 1588 + CyberSentry. Req UR FW 7.xx or higher
Mount / Coating			H											Horizontal (19" rack) - Standard
			A											Horizontal (19" rack) - Harsh Chemical Environment Option
			V											Vertical (3/4 size) - Standard
			B											Vertical (3/4 size) - Harsh Chemical Environment Option
User Interface				F										Vertical Front Panel with English Display
				I										Enhanced German Front Panel
				J										Enhanced German Front Panel with User-Programmable Pushbuttons
				K										Enhanced English Front Panel
				L										Enhanced English Front Panel with User-Programmable Pushbuttons
				M										Enhanced French Front Panel
				N										Enhanced French Front Panel with User-Programmable Pushbuttons
				Q										Enhanced Russian Front Panel
				T										Enhanced Russian Front Panel with User-Programmable Pushbuttons
				U										Enhanced Chinese Front Panel
				V										Enhanced Chinese Front Panel with User-Programmable Pushbuttons
				W										Enhanced Turkish Front Panel
				Y										Enhanced Turkish Front Panel with User-Programmable Pushbuttons
Power Supply (see note 2 below)					H									125 / 250 V AC/DC
					H								RH	125/250 V AC/DC with redundant 125/250 V AC/DC
					L									24 - 48 V (DC only)
CT/VT DSP						8P		8F						L60 DSP 4CT & 2 Comms Channels + Standard 4CT/4VT (Breaker and Half)
								8L						Standard 4CT/4VT w/ enhanced diagnostics
Digital I/O							XX		XX	XX	XX			No Module
							4A		4A	4A	4A			4 Solid State (No Monitoring) MOSFET Outputs
							4C		4C	4C	4C			4 Solid State (Current w/opt Voltage) MOSFET Outputs
							4D		4D	4D	4D			16 Digital Inputs with Auto-Burnish
							4L		4L	4L	4L			14 Form-A (No Monitoring) Latchable Outputs
							67		67	67	67			8 Form-A (No Monitoring) Outputs
							6C		6C	6C	6C			8 Form-C Outputs
							6D		6D	6D	6D			16 Digital Inputs
							6E		6E	6E	6E			4 Form-C Outputs, 8 Digital Inputs
							6F		6F	6F	6F			8 Fast Form-C Outputs
							6K		6K	6K	6K			4 Form-C & 4 Fast Form-C Outputs
							6L		6L	6L	6L			2 Form-A (Current w/ opt Voltage) & 2 Form-C Outputs, 8 Digital Inputs
							6M		6M	6M	6M			2 Form-A (Current w/ opt Voltage) & 4 Form-C Outputs, 4 Digital Inputs
							6N		6N	6N	6N			4 Form-A (Current w/ opt Voltage) Outputs, 8 Digital Inputs
							6P		6P	6P	6P			6 Form-A (Current w/ opt Voltage) Outputs, 4 Digital Inputs
							6R		6R	6R	6R			2 Form-A (No Monitoring) & 2 Form-C Outputs, 8 Digital Inputs
							6S		6S	6S	6S			2 Form-A (No Monitoring) & 4 Form-C Outputs, 4 Digital Inputs
							6T		6T	6T	6T			4 Form-A (No Monitoring) Outputs, 8 Digital Inputs
							6U		6U	6U	6U			6 Form-A (No Monitoring) Outputs, 4 Digital Inputs
Transducer I/O							5A		5A	5A	5A			4 dcmA Inputs, 4 dcmA Outputs
							5F		5F	5F	5F			8 dcmA Inputs
Inter-Relay Communications													2B	37.94SM, 1300nm singlemode, ELED, 2 Channel singlemode
													2I	Channel 1 - IEEE C37.94, 820nm, multimode fiber, 64/128 kbps; Channel 2 - 1300 nm, singlemode, LASER
													2J	Channel 1 - IEEE C37.94, 820nm, multimode fiber, 64/128 kbps; Channel 2 - 1550 nm, singlemode, LASER
													7A	820 nm, multimode, LED, 1 Channel
													7B	1300 nm, multimode, LED, 1 Channel
													7C	1300 nm, singlemode, ELED, 1 Channel
													7H	820 nm, multimode, LED, 2 Channels
													7I	1300 nm, multimode, LED, 2 Channels
													7J	1300 nm, singlemode, ELED, 2 Channels
													7S	G.703, 2 Channels
													7W	RS422, 2 Channels
													73	1550 nm, singlemode, LASER, 2 Channels
													77	IEEE C37.94, 820 nm, multimode, LED, 2 Channel

Ordering Note: 1. To view all the options available for L60, please visit GE's On-Line Store http://store.gedigitalenergy.com/viewprod.asp?model=L60
2. Redundant power supply only available in horizontal unit. If redundant is chosen, must be same type. Maximum 2 per chassis.

imagination at work

GEGridSolutions.com

IEC is a registered trademark of Commission Electrotechnique Internationale. IEEE is a registered trademark of the Institute of Electrical Electronics Engineers, Inc. Modbus is a registered trademark of Schneider Automation. NERC is a registered trademark of North American Electric Reliability Council. NIST is a registered trademark of the National Institute of Standards and Technology.

GE, the GE monogram, Multilin, FlexLogic, EnerVista and CyberSentry are trademarks of General Electric Company.

GE reserves the right to make changes to specifications of products described at any time without notice and without obligation to notify any person of such changes.

GEA-12590Q(E)
English
170130

Copyright 2017, General Electric Company. All Rights Reserved.