GE VERNOVA

8 Series 850

Instruction Manual

Feeder Protection System

Hardware Version: C
Firmware Version: 4.20
Publication Reference: 850-1601-0298-C420-1

Copyright statement

Copyright © 2024 GE Vernova. All rights reserved.

EnerVista, *EnerVista Launchpad*, and *EnerVista D&I Setup software* are registered trademarks of GE Vernova.

The contents of this manual are the property of GE Vernova. This documentation is furnished on license and may not be reproduced in whole or in part without the permission of GE Vernova. The content of this manual is for informational use only and is subject to change without notice.

Disclaimer

It is the responsibility of the user to verify and validate the suitability of all GE Vernova products. This equipment must be used within its design limits. The proper application including the configuration and setting of this product to suit the power system assets, is the responsibility of the user, who is also required to ensure that all local or regional safety guidelines are adhered to. Incorrect application of this product could risk damage to property, the environment, personal injuries or fatalities and it is the sole responsibility of the person/entity applying and qualifying the product for use.

The content of this document has been developed to provide guidance to properly install, configure and maintain this product for its intended applications. This guidance is not intended to cover every possible contingency that may arise during commissioning, operation, service, or maintenance activities. Should you encounter any circumstances not clearly addressed in this document, please contact your local GE service site.

It is the sole responsibility of the user to secure their network and associated devices against cybersecurity intrusions or attacks. GE Vernova and its affiliates are not liable for any damages or losses arising from or related to such security intrusion or attacks.

The information contained in this document is subject to change without notice.

Warranty

For products shipped as of 1 October 2013, GE Vernova Grid Solutions warrants most of its GE-manufactured products for 10 years.

For warranty details including any limitations and disclaimers, see the Terms and Conditions at http://www.gevernova.com/gegridsolutions.com/multilin/warranty.htm

For products shipped before 1 October 2013, the standard 24-month warranty applies.

Major changes

For information on the updates included in this release of the manual, please refer to the latest release notes.

Open source licenses

The optional IEC 61850-9-2LE/IEC 61869 Process Bus Modules include open source code. See the UR-OpenSourceLicense folder installed at the root level with the software, such as at C:\Program Files (x86)\GE Power Management\URPC

Contents

Chapter 1 Introduction 1

1.1 Chapter Overview 2
1.2 Foreword 3
1.2.1 Target Audience 3
1.2.2 Typographical conventions 3
1.2.3 Nomenclature 4
1.3 Product overview 5
1.4 General description of the 8 Series 6
1.5 Functions and features 8
1.6 Security Overview 14
1.7 Order Codes 16
1.8 Cautions, warnings and notes 21
1.8.1 Safety words and definitions 21
1.8.2 General Cautions and Warnings 21
1.9 Must-read Information 24
1.9.1 Storage 24
1.10 For Further Assistance 25
1.10.1 Repairs 25

Chapter 2 Installation 26

2.1 Chapter Overview 27
2.2 Product Identification 28
2.3 Dimensions 29
2.4 Mounting 30
2.4.1 Standard Panel Mount 30
2.5 Draw-out Unit Withdrawal and Insertion 35
2.6 Removable Power Supply 37
2.7 Removable Magnetic Module 38
2.8 Remote Module I/O (RMIO) 41
2.9 IP20 Back Cover 43
2.10 Arc Flash Sensor 44
2.11 Physical considerations of wiring 52
2.11.1 Terminal Strip Types 53
2.11.2 Wire Size 54
2.12 Terminal connections 55
2.12.1 General connections 56
2.13 Terminal Identification 58
2.14 RMIO Module Installation 61
2.15 Phase Sequence and Transformer Polarity 63
2.16 Ground and Sensitive Ground CT Inputs 64
2.17 Zero-Sequence CT Installation 66
2.18 Voltage Inputs 67
2.19 Restricted Ground Fault Inputs 68
2.20 Control Power 69
2.21 Contact Inputs 70
2.22 Serial Communications 77
2.23 IRIG-B 78
2.24 Typical Wiring Diagram 79

Chapter 3 Interfaces 81

3.1 Chapter Overview 82

3.2 First access 83
3.3 Front panel options 84
3.3.1 Graphical Display Pages 85
3.3.1.1 Menu hierarchy 86
3.3.1.2 Working with Graphical Display Pages 87
3.3.1.3 Single Line Diagram 89
3.3.2 Three-pushbutton front panel LEDs 91
3.3.3 Ten-pushbutton front panel LEDs 92
3.3.4 Home screen icons 94
3.3.5 Relay Messages 95
3.3.5.1 Target Messages 95
3.3.5.2 Self-test errors 96
3.3.5.3 Out of Service 100
3.3.5.4 Flash Messages 100
3.3.6 Label Removal 100
3.4 Software Interface 102
3.4.1 EnerVista D&I Setup software 102
3.4.1.1 Hardware & Software Requirements 102
3.4.1.2 Installing EnerVista D&I Setup software 102
3.4.1.3 Upgrading EnerVista D&I Setup software 103
3.4.2 Connecting EnerVista D&I Setup software to the relay 103
3.4.2.1 Using the Quick Connect Feature 103
3.4.2.2 Configuring Ethernet Communications 103
3.4.2.3 Connecting to the Relay 104
3.4.2.4 Configuring USB Address 104
3.4.3 Working with Setpoints 106
3.4.3.1 Engaging a Device 106
3.4.3.2 Entering Setpoints 106
3.4.3.3 Using Setpoint Files 108
3.4.3.4 Downloading and saving Setpoint files 109
3.4.3.5 Adding Setpoint files to the environment 109
3.4.3.6 Creating a new Setpoints file 109
3.4.3.7 Upgrading Setpoint files to a new revision 110
3.4.3.8 Printing Setpoints 110
3.4.3.9 Printing values from a connected device 110
3.4.3.10 Loading Setpoints from a File 111
3.4.3.11 Uninstalling files and clearing data 111
3.4.4 Quick Setup 111
3.4.5 Upgrading relay firmware 111
3.4.5.1 Loading new relay firmware 112
3.4.6 SLD Configurator 113
3.4.6.1 Control Objects 114
3.4.6.2 Status Objects 116
3.4.6.3 Metering Objects 116
3.4.6.4 Device Status Object 117
3.4.6.5 Static Objects 117
3.4.6.6 Front Panel Interaction 117
3.4.7 FlexCurve Editor 119
3.4.8 Transient Recorder (Waveform Capture) 120
3.4.9 Protection Summary 123
3.4.10 FlexLogic Favourites 124
3.4.11 Offline Settings File Conversion 124
3.4.11.1 Converting legacy files 124
3.4.11.2 Conversion Summary Report 125
3.4.11.3 Results Window 125

Chapter 4 Cybersecurity 126

4.1 Overview 127
4.2 The Need for Cybersecurity 128
4.3 Standards 129
4.3.1 NERC Compliance 129
4.3.1.1 CIP 002 130
4.3.1.2 CIP 003 130
4.3.1.3 CIP 004 130
4.3.1.4 CIP 005 130
4.3.1.5 CIP 006 131
4.3.1.6 CIP 007 131
4.3.1.7 CIP 008 131
4.3.1.8 CIP 009 131
4.3.2 IEEE 1686-2013 131
4.3.3 IEC 62351 132
4.4 Cybersecurity Implementation 137
4.4.1 RBAC Functionality 137
4.4.2 Basic Security Implementation 138
4.4.2.1 Device/Local Authentication 138
4.4.2.2 Four-level Access 138
4.4.2.3 Bypass Access 139
4.4.2.4 Enhanced Password Security 140
4.4.2.5 Disabling Physical and Logical Ports 140
4.4.2.6 Non-Encrypted/Clear Text Modbus 141
4.4.2.7 Security Events 141
4.4.3 Advanced Cybersecurity Implementation 142
4.4.3.1 Permissions Vs Access Matrix/Permission Assignment 142
4.4.3.2 Server/Remote Authentication 143
4.4.3.3 Server/Remote Authentication (RADIUS) 143
4.4.3.4 Server/Remote Authentication (LEGACY LDAP PULL MODEL) 144
4.4.4 Unique Configurable Usernames 147
4.4.5 Secure Encrypted Communication 147
4.4.5.1 ModBus/SSH 147
4.4.5.2 SFTP 147
4.4.6 Syslog 148
4.4.7 Increased Product Hardening 150
4.4.7.1 Additional Features 150
4.4.8 Lost Password 150
4.4.9 Loading Factory Configuration 150
4.4.10 Additional Features 150
4.4.10.1 Lost Password 150
4.4.10.2 Loading Factory Configuration 150
4.5 RBAC User Management Cybersecurity Configuration Tool 151
4.5.1 Cybersecurity Modbus Settings Configuration 151
4.5.1.1 Cybersecurity Non-Modbus Settings Configuration 151
4.5.1.2 User Management Configuration 152
4.5.1.3 Roles Configuration 153
4.5.1.4 Security Settings Configuration 154
4.5.1.5 Syslog Configuration 157

Chapter 5 About Setpoints 158

5.1 Chapter Overview 159
5.2 About Setpoints 160
5.3 Setpoints Entry Methods 161
5.4 Common Setpoints 162
5.5 Logic Diagrams 164

Chapter 6 Device Setpoints 165

6.1 Chapter Overview 166
6.2 Device menu hierarchy 167
6.3 Custom Configuration 168
6.4 Real-time Clock 171
6.4.1 PTP Configuration 171
6.4.2 Clock 173
6.4.3 SNTP Protocol 175
6.5 Communications 176
6.5.1 Modbus Protocol 176
6.5.2 Modbus configurable parameters 176
6.5.3 RS485 179
6.5.4 Wi-Fi 179
6.5.5 Wi-Fi Quick Start Procedure 181
6.5.6 USB 182
6.5.7 Ethernet Ports 182
6.5.7.1 Network Settings Menu 183
6.5.8 Routing 184
6.5.9 DNP Protocol settings 187
6.5.10 DNP and IEC104 point lists 189
6.5.11 IEC60870-5-104 192
6.5.12 IEC60870-5-103 194
6.5.13 IEC 103 Point Lists 194
6.5.13.1 Binary Input Points 194
6.5.13.2 Measurands 195
6.5.13.3 Commands 196
6.5.14 IEC 103 Disturbance Recorder 196
6.5.15 GOOSE Subscribe 196
6.5.15.1 Remote Inputs 197
6.5.15.2 Remote Inputs DPS 197
6.5.15.3 GOOSE Analog 197
6.5.16 IEC 61850 MMS 198
6.5.17 TFTP 199
6.5.18 SFTP/SSH 199
6.5.19 SNMP 199
6.5.19.1 SNMP MIB 201
6.5.20 IEC 61850 205
6.5.20.1 IEC61850 Configurator 205
6.6 Transient Recorder 208
6.7 Data Logger 210
6.8 Fault Reports 213
6.9 Event Data 216
6.10 Flex states 217
6.11 Front Panel 218
6.11.1 Programmable LEDs 218
6.11.1.1 LED allocation tables 219
6.11.2 Programmable Pushbuttons 221
6.11.2.1 Ten Pushbutton allocation tables 226
6.11.3 Tab Pushbuttons 226
6.11.4 Annunciator 229
6.11.5 Display Properties 233
6.11.5.1 Support for Cyrillic languages 234
6.11.6 Default Screens 234
6.11.7 Home Screens 235
6.11.8 FlexScreens 236
6.12 Resetting 238

6.13 Installation 239
6.14 Self-Test Monitor 241
6.15 Clear Records 242

Chapter 7 System Setpoints 243

7.1 Chapter Overview 244
7.2 System menu hierarchy 245
7.3 Current Sensing 246
7.4 Voltage sensing 248
7.5 Power Sensing 250
7.6 Power System 251
7.7 Breakers 252
7.8 Switches 255
7.9 FlexCurves 259
7.9.1 Recloser Curve Editing 261
7.9.2 Standard recloser curves 264

Chapter 8 Input and Output Setpoints 272

8.1 Chapter Overview 273
8.2 Inputs 274
8.2.1 Contact Inputs 274
8.2.2 Virtual Inputs 277
8.2.3 Remote Inputs 278
8.3 Outputs 280
8.3.1 Output Relays 280
8.3.1.1 Output Relay Availability 283
8.3.1.2 Critical failure relay 283
8.3.1.3 Relay selected for breaker Trip 284
8.3.1.4 Relay selected for breaker close 287
8.3.2 Virtual Outputs 288
8.3.3 Analog Outputs 289

Chapter 9 Protection 292

9.1 Chapter Overview 293
9.2 Protection 294
9.2.1 Current elements overview 294
9.2.1.1 Inverse Time Overcurrent Curves 295
9.2.1.2 Phase Time Overcurrent Protection (51P) 307
9.2.1.3 Phase Instantaneous Overcurrent Protection (50P) 312
9.2.1.4 Phase Directional Overcurrent Protection (67P) 314
9.2.1.5 Neutral Time Overcurrent Protection (51N) 318
9.2.1.6 Neutral Instantaneous Overcurrent Protection (50N) 322
9.2.1.7 Neutral Directional Overcurrent Protection (67N) 324
9.2.1.8 Ground Time Overcurrent Protection (51G) 329
9.2.1.9 Ground Instantaneous Overcurrent Protection (50G) 333
9.2.1.10 Ground Directional Overcurrent Protection (67G) 335
9.2.1.11 Sensitive Ground Time Overcurrent Protection (51SG) 342
9.2.1.12 Sensitive Ground Instantaneous Overcurrent Protection (50SG) 346
9.2.1.13 Sensitive Ground Directional Overcurrent Protection (67SG) 348
9.2.1.14 Restricted Ground Fault (87G) 353
9.2.1.15 Switch on to Fault (SOTF) 358
9.2.1.16 Negative Sequence Time Overcurrent Protection (51_2) 361
9.2.1.17 Negative Sequence Instantaneous Overcurrent Protection (50_2) 365
9.2.1.18 Negative Sequence Directional Overcurrent Protection (67_2) 367
9.2.1.19 Broken Conductor 371

9.2.1.20 Load Encroachment 373
9.2.1.21 Undercurrent (37) 377
9.2.1.22 Thermal Overload (49) 380
9.2.2 Voltage elements overview 384
9.2.2.1 Phase Undervoltage Protection (27P) 385
9.2.2.2 Timed Undervoltage Protection (27T) 389
9.2.2.3 UV Reactive Power (27Q) 399
9.2.2.4 Auxiliary Undervoltage (27X) 407
9.2.2.5 Phase Overvoltage Protection (59P) 409
9.2.2.6 Auxiliary Overvoltage Protection (59X) 413
9.2.2.7 Neutral Overvoltage Protection (59N) 415
9.2.2.8 Negative Sequence Overvoltage Protection (59_2) 418
9.2.3 Admittance elements 421
9.2.3.1 Neutral Admittance (21YN) 421
9.2.4 Power elements 427
9.2.4.1 Directional Power (32) 427
9.2.4.2 Wattmetric Ground Fault (32N) 432
9.2.5 Frequency elements 438
9.2.5.1 Frequency Protection Common Setup 438
9.2.5.2 Underfrequency (81U) 439
9.2.5.3 Overfrequency (81O) 442
9.2.5.4 Frequency Rate of Change (81R) 445
9.2.5.5 Fast Underfrequency 449

Chapter 10 Monitoring 453

10.1 Chapter Overview 454
10.2 Monitoring Overview 455
10.3 Breaker monitoring 456
10.3.1 Trip and Close Circuit Monitoring 456
10.3.2 Breaker Arcing Current 461
10.3.3 Breaker Health 464
10.4 Functions 469
10.4.1 Power Factor (55) 469
10.4.2 Demand 474
10.4.2.1 Current Demand 475
10.4.2.2 Real Power Demand 477
10.4.2.3 Reactive Power 479
10.4.2.4 Apparent Power Demand 481
10.4.3 Pulsed Outputs 483
10.4.4 Digital Counters 486
10.4.5 Time of Day Timer 489
10.5 Harmonic Detection 493
10.6 Power Quality/Voltage Disturbance 496
10.6.1 Voltage Interruption 499
10.7 Transient Ground Fault Detection 502
10.7.1 Transient Ground Fault Detection settings 506
10.7.2 Transient Ground Fault Detection logic 510
10.8 RTD Temperature 515
10.9 RTD Trouble 520
10.10 Loss of Communications 521
10.11 Incipient Cable Fault 523
10.11.1 Incipient Cable Fault Settings 524

Chapter 11 Control 527

11.1 Chapter Overview 528
11.2 Control Overview 529

11.3 Setpoint Group 530
11.4 Local Control Mode 532
11.5 Breaker Control 541
11.5.1 Control Authority 544
11.6 Switch Control (89) 546
11.7 Pole Discordance (52) 549
11.8 Virtual Input Control 557
11.9 Trip Bus 558
11.10 Breaker Failure (50BF) 561
11.10.1 Breaker Failure Setup 562
11.10.2 Initiate 565
11.11 Arc Flash Protection 567
11.12 Synchrocheck (25) 570
11.13 Manual Close Blocking 575
11.14 Cold Load Pickup 579
11.15 Undervoltage Restoration 584
11.16 Underfrequency Restoration 588
11.17 Bus Transfer 592
11.17.1 Bus Transfer setpoints incomer 1 596
11.17.2 Bus Transfer setpoints Incomer 2 600
11.17.3 Bus Transfer setpoints Tie-breaker 604
11.17.4 Bus Transfer Ready Indication 606
11.17.5 ATS Wiring Diagrams 611
11.18 Autoreclose 615
11.18.1 Autoreclose Setup 617
11.18.2 Autoreclose Initiate 622
11.18.3 Autoreclose Shot 623
11.18.4 Autoreclose Rate Supervision 625
11.18.5 Autoreclose Current Supervision 627
11.18.6 Zone Coordination 630
11.19 CT Supervision 634
11.20 VT Fuse Failure (VTFF) 642
11.20.1 VT Fuse Failure settings 642
11.21 Digital Elements 645

Chapter 12 Flexlogic 648

12.1 Chapter Overview 649
12.2 FlexLogic 650
12.2.1 Timers 653
12.2.2 Non-volatile Latches 653
12.2.3 FlexLogic Equation 654
12.2.4 Viewing FlexLogic Graphics 656
12.2.5 FlexElements 657
12.2.5.1 FlexElement settings 658
12.2.5.2 FlexElements - Examples 660

Chapter 13 Testing 664

13.1 Chapter Overview 665
13.2 Testing display hierarchy 666
13.3 Simulation 667
13.3.1 Simulation Setup 667
13.3.2 Simulation Pre-Fault 668
13.3.3 Simulation Fault 669
13.3.4 Simulation Post-Fault 669

13.4 General 671
13.5 Test LEDs 673
13.6 Contact Inputs 674
13.7 Output Relays 675
13.8 GOOSE 676

Chapter 14 Status 677

14.1 Chapter Overview 678
14.2 Summary 679
14.3 Autoreclose 682
14.4 Breaker status 683
14.5 Information 684
14.6 Communications status 687
14.6.1 GOOSE 687
14.6.2 Communications Status settings 687
14.7 Other status settings 691

Chapter 15 Metering 696

15.1 Chapter Overview 697
15.2 Metering Overview 698
15.3 Metering Summary 701
15.4 Impedance/admittance 702
15.4.1 Neutral Admittance 702
15.5 Currents 703
15.6 Neutral IOC 705
15.7 Voltages 706
15.8 Frequency 709
15.8.1 High-speed frequency 710
15.8.2 Fast Underfrequency 710
15.9 Harmonics 711
15.9.1 Harmonic Detection 711
15.10 Synchrocheck 712
15.11 Power functions 713
15.11.1 Power 713
15.11.2 Power Factor 715
15.11.3 Directional Power 716
15.11.4 Wattmetric Ground Fault 716
15.12 Energy 717
15.12.1 Energy (X) 717
15.12.2 Energy Log 717
15.13 Demand 720
15.13.1 Current Demand 720
15.13.1.1 Current Demand 1(X) 720
15.14 Power Demand 721
15.15 Thermal Capacity 722
15.16 Transient Ground Fault Detection 723
15.17 CT Supervision (CTS) 724
15.18 Voltage Transformer Fuse Failure 725
15.19 Arc Flash 726
15.20 Resistance Temperature Detectors 727
15.21 Resistance Temperature Detectors 728
15.22 Resistance Temperature Detectors 729
15.23 Resistance Temperature Detectors 730
15.24 Analog Inputs 731

15.25 FlexElements 732

Chapter 16 Records 733

16.1 Chapter Overview 734
16.2 Events 735
16.2.1 Event Viewer 735
16.3 Transient Records 739
16.4 Fault Reports 740
16.5 Data Logger 742
16.6 Breakers 743
16.6.1 Breaker Arcing Current 743
16.6.2 Breaker Health 743
16.7 Power Quality 745
16.8 Digital Counters 747
16.9 Remote Modbus Device 748
16.10 Incipient fault counter 751
16.11 Clear Records 752

Chapter 17 Maintenance 753

17.1 Chapter Overview 754
17.2 Environmental Health Report 755
17.3 General Maintenance 757
17.3.1 In-service Maintenance 757
17.3.2 Out-of-service Maintenance 757
17.3.3 Unscheduled Maintenance (System Interruption) 757

Chapter 18 Specifications 758

18.1 Device 759
18.1.1 Annunciator panel 759
18.1.2 Custom configurations 759
18.2 Protection elements 760
18.2.1 Broken conductor 760
18.2.2 Load encroachment 760
18.2.3 Thermal overload (49) 760
18.2.4 Switch on to fault (SOTF) 761
18.2.5 Restricted ground fault (87G) 761
18.2.6 Neutral admittance (21YN) 761
18.2.7 Phase Instantaneous Overcurrent (50P) 762
18.2.8 Neutral Instantaneous Overcurrent (50N) 762
18.2.9 Ground Instantaneous Overcurrent (50G) 762
18.2.10 Phase time overcurrent (51P/V) 763
18.2.11 Neutral/ground time overcurrent (51N/G) 763
18.2.12 Phase directional overcurrent (67P) 764
18.2.13 Neutral directional overcurrent (67N) 764
18.2.14 Ground directional overcurrent (67G) 764
18.2.15 Negative Sequence Time Overcurrent 765
18.2.16 Negative sequence directional overcurrent 765
18.2.17 Negative sequence instantaneous overcurrent 766
18.2.18 Sensitive ground instantaneous overcurrent (50SG) 766
18.2.19 Sensitive ground directional overcurrent (67SG) 767
18.2.20 Undercurrent (37) 767
18.2.21 Phase overvoltage (59P) 768
18.2.22 Neutral overvoltage (59N) 768
18.2.23 Auxiliary overvoltage (59X) 769

18.2.24	Negative sequence overvoltage (59_2)	769
18.2.25	Phase undervoltage (27P)	769
18.2.26	Auxiliary undervoltage (27X)	770
18.2.27	Timed undervoltage (27T)	770
18.2.28	Voltage Interruption	770
18.2.29	Overfrequency (81O)	771
18.2.30	Underfrequency (81U)	771
18.2.31	Fast underfrequency	771
18.2.32	Rate of change of frequency (81R)	772
18.2.33	Directional power	772
18.2.34	Undervoltage reactive power (27Q)	772
18.2.35	Wattmetric ground fault (32N)	773
18.2.36	RTD protection	773
18.2.37	Arc flash HS phase/ground instantaneous overcurrent (50P/50G)	774
18.3	**Control**	**775**
18.3.1	Autoreclose	775
18.3.2	CT supervision	775
18.3.3	Breaker control	776
18.3.4	Pole discordance protection	776
18.3.5	Local control mode	776
18.3.6	Switch control	776
18.3.7	Synchrocheck	776
18.3.8	Trip bus	777
18.3.9	Digital Elements	777
18.4	**Monitoring**	**778**
18.4.1	Harmonic derating	778
18.4.2	Tap changer failure	778
18.4.3	Power factor (55)	778
18.4.4	Fault locator	778
18.4.5	Breaker arcing current	778
18.4.6	Breaker failure	779
18.4.7	Breaker health	779
18.4.8	Trip circuit monitoring	779
18.4.9	Close circuit monitoring	779
18.4.10	Demand	779
18.4.11	Harmonic detection	780
18.4.12	Voltage disturbance	780
18.4.13	Voltage Swell	780
18.4.14	Voltage sag	780
18.4.15	Time of day timer	780
18.4.16	Fault reports	781
18.4.17	Incipient Fault Protection	781
18.5	**Recording**	**782**
18.5.1	Transient recorder	782
18.5.2	Event data	782
18.5.3	Data logger	782
18.5.4	Event recorder	782
18.5.5	Last trip data	783
18.6	**User-programmable elements**	**784**
18.6.1	FlexLogic	784
18.6.2	FlexElements	784
18.6.3	FlexStates	784
18.6.4	Non-volatile latches	784
18.6.5	FlexCurves	785
18.6.6	Tab pushbuttons	785
18.6.7	User-programmable LEDs	785

18.6.8	User-programmable pushbuttons	785
18.7	**Metering**	**786**
18.7.1	RMS parameters	786
18.7.2	Phasors	787
18.7.3	Frequency	787
18.7.4	Current and voltage harmonics	787
18.7.5	Demand	788
18.7.6	Station battery monitoring	788
18.8	**Inputs**	**789**
18.8.1	AC currents	789
18.8.2	AC voltages	789
18.8.3	LEA voltage inputs	789
18.8.4	Analog inputs	789
18.8.5	Frequency	790
18.8.6	Arc flash sensor/fiber	790
18.8.7	Contact inputs	790
18.8.8	IRIG-B input	791
18.8.9	RTD inputs	791
18.9	**Outputs**	**792**
18.9.1	Analog outputs	792
18.9.2	Form C output relays	792
18.9.3	Form A voltage monitor	793
18.9.4	Double pole output relays (I/O cards D and P)	793
18.9.5	Form A and Form C output relays (I/O cards B and K)	793
18.9.6	Solid state relays	794
18.9.7	Pulsed outputs	794
18.9.8	Coil actuator outputs	794
18.10	**Power supply**	**796**
18.10.1	Voltage supplies	796
18.10.2	Power consumption	796
18.10.3	Voltage loss ride-through	796
18.11	**Communications**	**797**
18.11.1	Ethernet	797
18.11.2	USB	797
18.11.3	Serial	797
18.11.4	WiFi	798
18.11.5	Remote Modbus	798
18.11.6	Controller Area Network	798
18.12	**Certifications and approvals**	**799**
18.12.1	Approvals	799
18.12.2	Testing and Certification	799
18.13	**Physical dimensions**	**801**
18.14	**Environmental**	**802**
18.15	**Long-term storage**	**803**

Appendix A Appendix A 804

1	**Warranty**	**805**
2	**Revision History**	**806**

CHAPTER 1

INTRODUCTION

1.1 CHAPTER OVERVIEW

This chapter provides some general information about the technical manual and an introduction to the device(s) described in this technical manual.

This chapter contains the following sections:

Chapter Overview	2
Foreword	3
Product overview	5
General description of the 8 Series	6
Functions and features	8
Security Overview	14
Order Codes	16
Cautions, warnings and notes	21
Must-read Information	24
For Further Assistance	25

1.2 FOREWORD

This technical manual provides a functional and technical description of the relay, as well as a comprehensive set of instructions for using it. The level at which this manual is written assumes that you are already familiar with protection engineering and have experience in this discipline. The description of principles and theory is limited to that which is necessary to understand the product. For further details on general protection engineering theory, we refer you to the publication, Protection and Automation Application Guide, which is available online.

We have attempted to make this manual as accurate, comprehensive and user-friendly as possible. However we cannot guarantee that it is free from errors. Nor can we state that it cannot be improved. We would therefore be very pleased to hear from you if you discover any errors, or have any suggestions for improvement. Our policy is to provide the information necessary to help you safely specify, engineer, install, commission, maintain, and eventually dispose of this product. We consider that this manual provides the necessary information, but if you believe that more details are needed, please contact us.

1.2.1 TARGET AUDIENCE

This manual is aimed towards all professionals charged with installing, commissioning, maintaining, troubleshooting, or operating any of the products within the specified product range. This includes installation and commissioning personnel as well as engineers who will be responsible for operating the product.

The level at which this manual is written assumes that installation and commissioning engineers have knowledge of handling electronic equipment. Also, system and protection engineers have a thorough knowledge of protection systems and associated equipment.

1.2.2 TYPOGRAPHICAL CONVENTIONS

The following typographical conventions are used throughout this manual.

- Description of software menu items, buttons, labels or hardware keys and buttons written in bold type and colored in Vernova dark green.
  For example: Select **Save** from the file menu
- The names for special keys, appear in in upper case bold type and colored in Vernova dark green.
  For example: **ENTER**
- Filenames, paths, code, and text that appears on a command line interface use the courier font
  For example: `Example\File.text`
- Special terminology is written with leading capitals
  For example: Line Differential Relay
- If reference is made to the relay's internal settings database on the relay's LCD screen, the menu items are written in bold italics
  For example: ***SECURITY*** (on the relay's LCD screen), or ***Security*** (in the EnerVista D&I Setup software software)
- Menu paths are shown with **>** separators. This applies to both software menu paths and relay menu paths
  For example: ***SETTINGS > SYSTEM SETUP > AC INPUTS*** (for relay path), or **File > Save** (for software path)
- Setting values are written with the courier font and are italicized
  For example: *`Enabled`*
- Multilin products, use Flexlogic operands. Flexlogic operands are written in dark Vernova green uppercase courier font
  For example: PUSHBUTTON 1 ON
- Sometimes it is beneficial to emphasize some words. Depending on the case in question, this may be done with bold, italic or upper case font attributes.
- Notes are written in italic in, and are surrounded by a border.
  For example:

Note:
This is a note

1.2.3 NOMENCLATURE

Due to the technical nature of this manual, many special terms, abbreviations and acronyms are used throughout the manual. Some of these terms are well-known industry-specific terms while others may be special product-specific terms used by GE Vernova. The first instance of any acronym or term used in a particular chapter is explained. In addition, a separate glossary is available on the GE Vernova website.

We would like to highlight the following changes of nomenclature however:

- The word *relay* and *IED* (Intelligent Electronic Device) are both used to describe the protection device. The term *IED* is associated with the IEC61850 standard, whereas the term *relay* is the long-used traditional term. It may also be referred to simply as the *device* or the *product*.
- American English and spelling is used throughout this manual.
- The term 'Earth' and American term 'Ground' are equivalent. You may find either used in the manual.
- When depicting a generic instance of a number of items, this manual uses <n> where n can be any integer.

1.3 PRODUCT OVERVIEW

The Multilin 850 is a microprocessor-based unit intended for the protection and control of feeder applications.

It is used to provide primary (main) or backup protection for underground and overhead feeders for utility and industrial power networks. The 850-D variant, with support for up to eight CT inputs and two sets of four traditional VT inputs, provides effective protection, control and monitoring of two distribution feeders. This feature also offer redundancy with the same number of devices.

1.4 GENERAL DESCRIPTION OF THE 8 SERIES

Each relay provides protection, control, and monitoring functions with both local and remote human interfaces. They also display the present trip/alarm conditions, and most of the more than 35 measured system parameters. Recording of past trip, alarm or control events, maximum demand levels, and energy consumption is also performed.

To meet diverse utility standards and industry requirements, you can program these relays to meet specific requirements. This flexibility will naturally make a piece of equipment difficult to learn. To aid new users in getting basic protection operating quickly, setpoints are set to typical default values and advanced features are disabled. You can reprogram these settings any time.

It is possible for you to program these relays using the front panel keys and display. However, due to the numerous settings, this manual method can be laborious. To simplify programming and provide a more intuitive interface, you can enter setpoints with a PC running the EnerVista D&I Setup software. Even with minimal computer knowledge, this menu-driven software provides easy access to all front panel functions. Actual values and setpoints can be displayed, altered, stored, and printed. If settings are stored in a setpoint file, they can be downloaded at any time to the front panel program port of the relay via a computer cable connected to the USB port of any personal computer.

CPU

Relay functions are controlled by two processors: a Freescale MPC5125 32-bit microprocessor that measures all analog signals and digital inputs and controls all output relays, and a Freescale MPC8358 32-bit microprocessor that controls all the advanced Ethernet communication protocols.

Analog Input and Waveform Capture

Magnetic transformers are used to scale-down the incoming analog signals from the source instrument transformers. The analog signals are then passed through a 11.5 kHz low pass analog anti-aliasing filter. All signals are then simultaneously captured by sample and hold buffers to ensure there are no phase shifts. The signals are converted to digital values by a 16-bit A/D converter before finally being passed on to the CPU for analysis.

The raw samples are scaled in software, then placed into the waveform capture buffer, thus emulating a fault recorder. The waveforms can be retrieved from the relay via the software for display and diagnostics.

Frequency

Frequency measurement is accomplished by measuring the time between zero crossings of the composite signal of three-phase bus voltages, line voltage or three-phase currents. The signals are passed through a low pass filter to prevent false zero crossings. Frequency tracking utilizes the measured frequency to set the sampling rate for current and voltage which results in better accuracy for the Discrete Fourier Transform (DFT) algorithm for off-nominal frequencies.

The main frequency tracking source uses three-phase bus voltages. The frequency tracking is switched automatically by an algorithm to the alternative reference source, i.e., three-phase currents signal or line voltage for the configuration of tie-breaker, if the frequency detected from the three-phase voltage inputs is declared invalid. The switching will not be performed if the frequency from the alternative reference signal is detected invalid. Upon detecting valid frequency on the main source, the tracking will be switched back to the main source. If a stable frequency signal is not available from all sources, then the tracking frequency defaults to the nominal system frequency.

Phasors, Transients, and Harmonics

All waveforms are processed eight times every cycle with a DC decaying removal filter and a DFT. The resulting phasors have fault current transients and all harmonics removed. This results in an overcurrent relay that is extremely secure and reliable and one that will not overreach.

Processing of AC Current Inputs

The DC Decaying Removal Filter is a short window digital filter, which removes the DC decaying component from the asymmetrical current present at the moment a fault occurs. This is done for all current signals used for overcurrent protection; voltage signals use the same DC Decaying Removal Filter. This filter ensures no overreach of the overcurrent protection.

The DFT uses exactly one cycle of samples to calculate a phasor quantity which represents the signal at the fundamental frequency; all harmonic components are removed. All subsequent calculations (e.g. power, etc.) are based upon the current and voltage phasors, such that the resulting values have no harmonic components. RMS (root mean square) values are calculated from one cycle of samples prior to filtering.

Protection Elements

All voltage, current and frequency protection elements are processed eight times every cycle to determine if a pickup has occurred or a timer has expired. The voltage and current protection elements use RMS current/voltage, or the magnitude of the phasor.

1.5 FUNCTIONS AND FEATURES

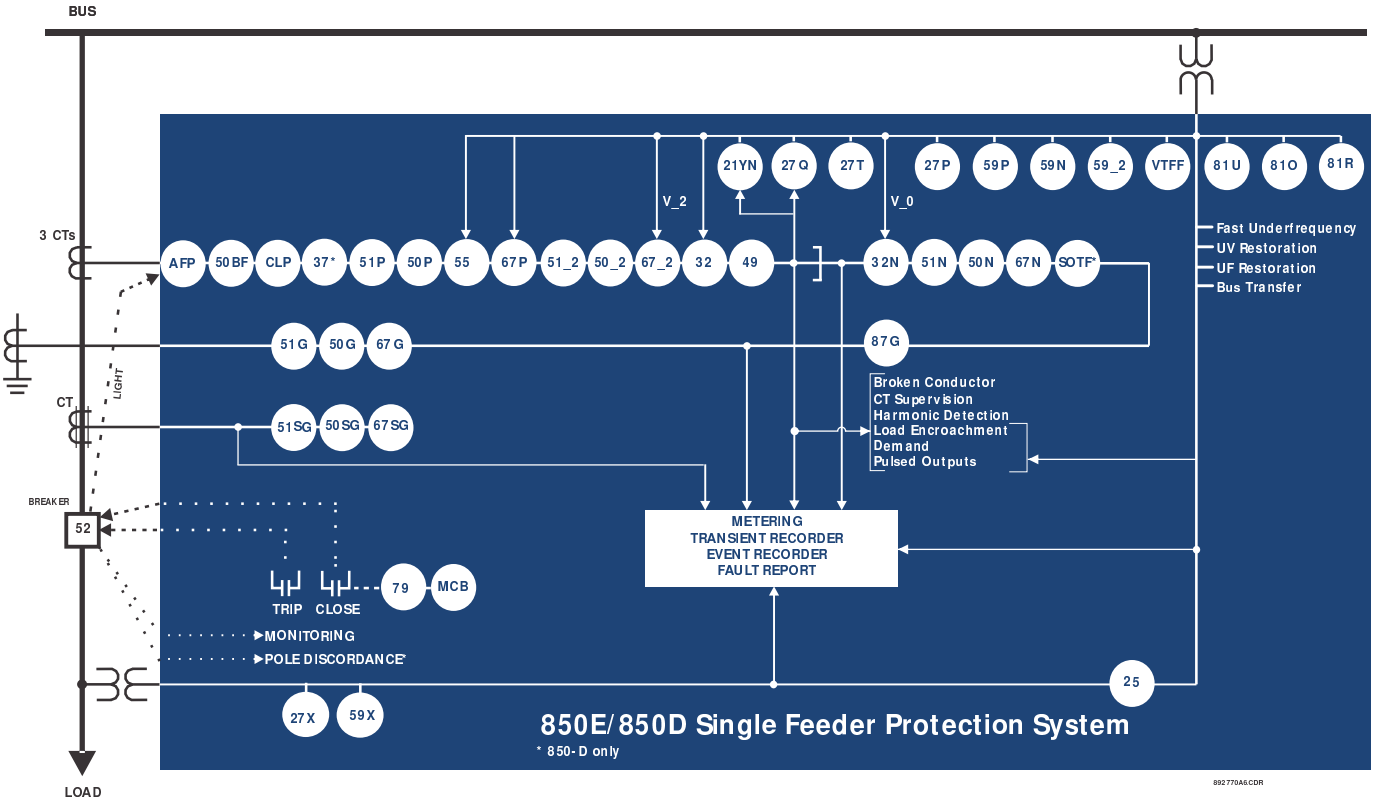

Figure 1: 850-E /D (Single Feeder System) Single Line Diagram

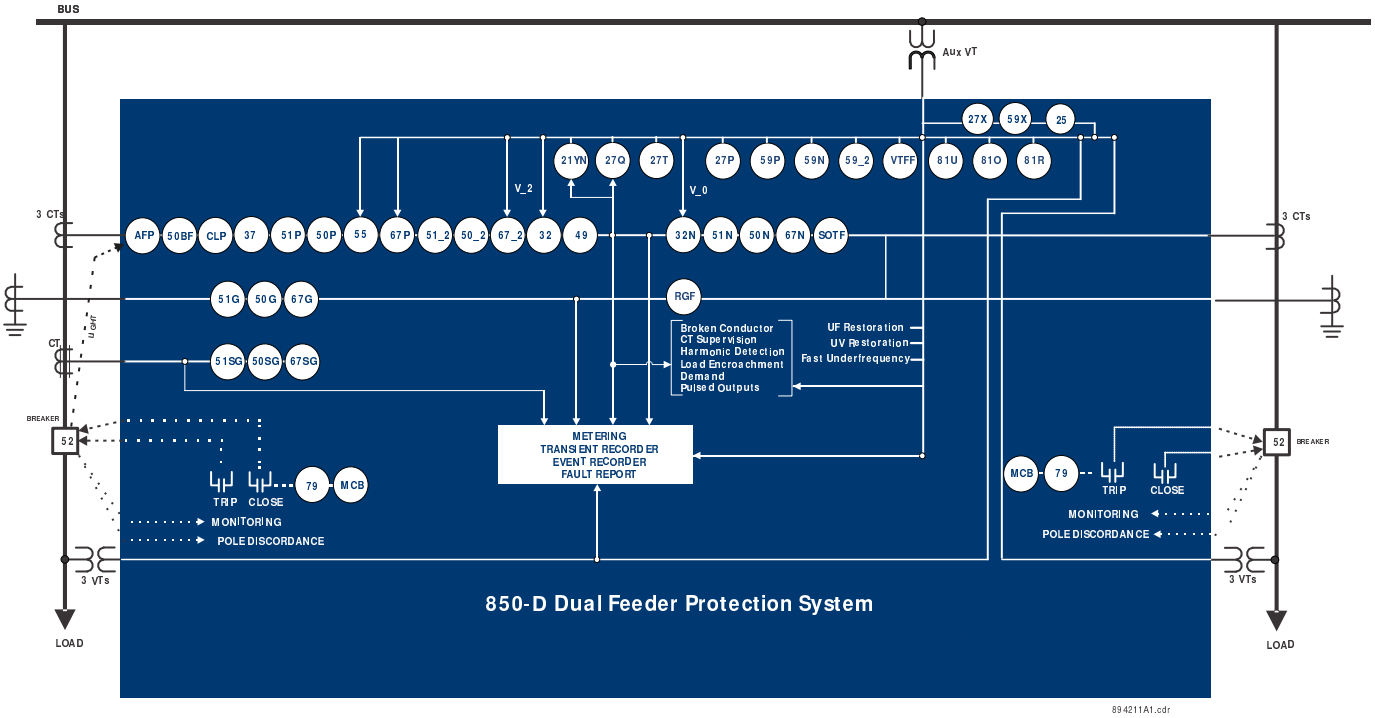

Figure 2: 850-D Single Line Diagram, Dual Feeder System

Model-specific ANSI Device Numbers and Functions

ANSI Device	Description	850-E Industrial	850-D Distribution
21YN	Neutral Admittance	Y (4)	Y (4)
25	Synchrocheck	Y	Y
27P	Phase Undervoltage	Y (4)	Y (8)
27Q	UV Reactive Power	Y (4)	Y (4)
27T	Timed Undervoltage Protection	Y (4)	Y (4)
27X	Auxiliary Undervoltage	Y (2)	Y (4)
32	Directional Power	Y (4)	Y (4)
32N	Wattmetric Ground Fault (Wattmetric zero sequence directional)	Y (4)	Y (4)
37	Undercurrent		Y (3)
49	Thermal Overload	Y (2)	Y (2)
50BF	Breaker Failure	Y (2)	Y (4)
50G	Ground Instantaneous Overcurrent	Y (1)	Y (8)
50SG	Sensitive Ground Instantaneous Overcurrent	Y (1)	Y (4)
50N	Neutral Instantaneous Overcurrent	Y (2)	Y (8)
50P	Phase Instantaneous Overcurrent	Y (2)	Y (8)
50_2	Negative Sequence Instantaneous Overcurrent	Y (1)	Y (8)
51G	Ground Time Overcurrent	Y (1)	Y (4)
51SG	Sensitive Ground Time Overcurrent	Y (1)	Y (2)
51N	Neutral Time Overcurrent	Y (2)	Y (4)
51P	Phase Time Overcurrent	Y (2)	Y (4)
51_2	Negative Sequence Time Overcurrent	Y (1)	Y (4)
52	AC Circuit Breaker		Y (3)
	Pole Discordance		Y (3)
55	Power Factor	Y	Y
59N	Neutral Overvoltage	Y (4)	Y (4)
59P	Phase Overvoltage	Y (4)	Y (4)
59X	Auxiliary Overvoltage	Y (2)	Y (4)

ANSI Device	Description	850-E Industrial	850-D Distribution
59_2	Negative Sequence Overvoltage	Y (2)	Y (4)
67G	Ground Directional Element	Y (1)	Y (2)
67SG	Sensitive Ground Directional Element	Y (1)	Y (1)
67N	Neutral Directional Element	Y (1)	Y (4)
67P	Phase Directional Element	Y (1)	Y (4)
67_2	Negative Sequence Directional Element	Y (1)	Y (2)
79	Automatic Recloser	Y (1)	Y (2)
81O	Overfrequency	Y (6)	Y (12)
81U	Underfrequency	Y (6)	Y (12)
81R	Frequency Rate of Change	Y (6)	Y (12)
87G	Restricted Ground Fault (RGF)	Y	Y
AFP	Arc Flash Protection	Y (4)	Y (4)
CLP	Cold Load Pickup	Y (1)	Y (2)
I1/12	Broken Conductor	Y (1)	Y (3)
MTM	Automatic Bus Transfer Scheme	Y	Y
MCB	Manual Close Blocking	Y	Y
SOTF	Switch on to Fault		Y (3)
TGFD	Transient Ground Fault Detection	Y	Y
VTFF	Voltage Transformer Fuse Failure	Y	Y
n/a	Auto Sectionalizer		
n/a	Battery Testing and Monitoring		
n/a	Capacitor and Coil Monitoring		
n/a	Fast Underfrequency	Y (8)	Y (8)
n/a	Load Encroachment	Y (1)	Y (2)
n/a	Overhead Switch Health Monitoring		
n/a	Power Loss		
n/a	PseudoVoltage		
n/a	Recloser Coil, Cap Voltage, and Health Monitoring		

ANSI Device	Description	850-E Industrial	850-D Distribution
n/a	Supply Switchover Function		
n/a	Underfrequency Restoration	Y	Y
n/a	Undervoltage Restoration	Y	Y

Other Device Functions

Description
Analog Input
Analog Output
Breaker Arcing Current (*I2t*)
Breaker Control
Breaker Health
CT Supervision
Current/Power Demand
Data Logger
Digital Counters
Event Recorder
Fault Report and Fault Locator
FlexElements
FlexLogic Equations
Flex States
Harmonic Detection
IEC 61850 Communications
Metering: current, voltage, power, PF, energy, frequency, harmonics, THD
Modbus User Map
Non-volatile Latches
OPC-UA Communications
Output Relays
Pulsed Outputs
Setpoint Groups (6)

Description
Time of Day Timer
Trip Bus (6)
Transient Recorder (Oscillography)
Trip and Close Coil Monitoring
User-programmable LEDs
User-programmable Pushbuttons
Virtual Inputs (64)
Virtual Outputs (96)
Voltage Disturbance

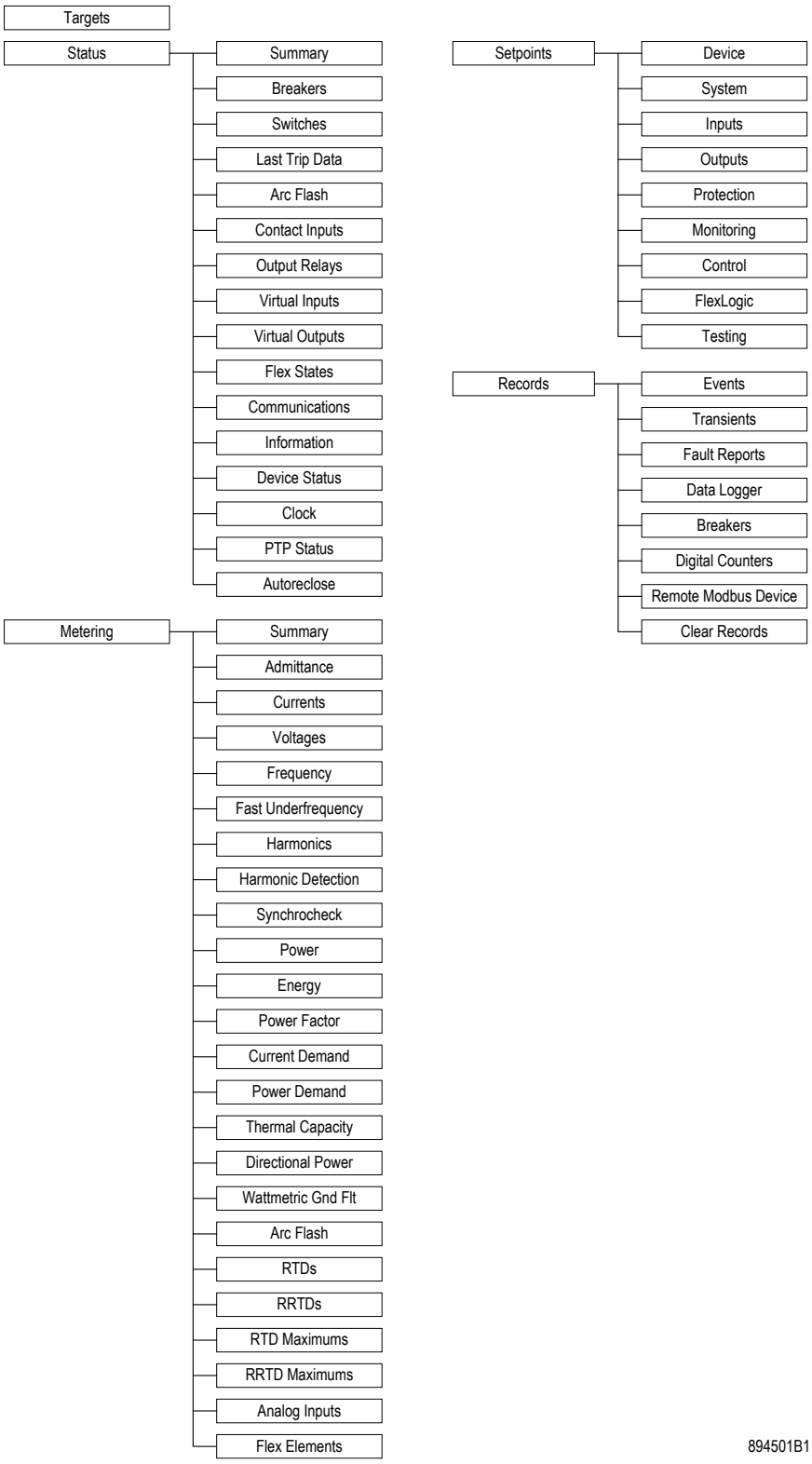

Figure 3: Main Menu Hierarchy

1.6 SECURITY OVERVIEW

The following security features are available:

BASIC SECURITY

The basic security feature is present in the default offering of the relay. The relay introduces the notion of roles for different levels of authority. Roles are used as login names with associated passwords stored on the device. The following roles are available at present: Administrator, Engineer, Operator, Factory and Viewer, with a fixed permission structure for each one. Note that the Factory role is not available for users, but strictly used in the manufacturing process.

The relay can still use the ***SETPOINT ACCESS*** switch feature, but enabling the feature can be done only by an Administrator. Setpoint access is controlled by a keyed switch to offer some minimal notion of security.

CYBERSENTRY

The CyberSentry Embedded Security feature is a software option that provides advanced security services. When the software option is purchased, the Basic Security is automatically disabled.

CyberSentry provides security through the following features:

- An Authentication, Authorization, Accounting (AAA) Remote Authentication Dial-In User Service (RADIUS) client that is centrally managed, enables user attribution, and uses secure standards based strong cryptography for authentication and credential protection.
- A Role-Based Access Control (RBAC) system that provides a permission model that allows access to device operations and configurations based on specific roles and individual user accounts configured on the AAA server. At present the defined roles are: Administrator, Engineer, Operator and Viewer.
- Strong encryption of all access and configuration network messages between the EnerVista software and devices using the Secure Shell (SSH) protocol, the Advanced Encryption Standard (AES), and 128-bit keys in Galois Counter Mode (GCM) as specified in the U.S. National Security Agency Suite B extension for SSH and approved by the National Institute of Standards and Technology (NIST) FIPS-140-2 standards for cryptographic systems.
- Security event reporting through the Syslog protocol for supporting Security Information Event Management (SIEM) systems for centralized cyber security monitoring.

There are two types of authentication supported by CyberSentry that can be used to access the device:

- Device Authentication – in which case the authentication is performed on the device itself, using the predefined roles as users (No RADIUS involvement).
    - Device authentication using local roles may be done either from the front panel or through EnerVista.
- Server Authentication - in which case the authentication is done on a RADIUS server, using individual user accounts defined on the server. When the user accounts are created, they are assigned to one of the predefined roles recognized by the relay.
    - Device authentication using RADIUS server may be done only through EnerVista.

Note:
USB does not currently support CyberSentry security.
EnerVista Viewpoint Monitor does not currently support CyberSentry security.
With the CyberSentry security option, many communication settings cannot be changed remotely. All communication settings can still be changed through the relay front panel.

When both device and server authentication are enabled, the relay automatically directs authentication requests to the device or the respective RADIUS server, based on user names. If the user ID credential does not match one of the device local accounts, the relay automatically forwards the request to a RADIUS server when one is provided. If a RADIUS server is provided, but is unreachable over the network, server authentication requests are denied. In this situation, use local device accounts to gain access to the system.

USER ROLES

User Access Levels are used to grant varying permissions to specific user roles. User roles are used by both Basic Security and CyberSentry.

The following user roles are supported:

- **Administrator**: The Administrator role has complete read and write access to all settings and commands. The role does not allow concurrent access. The Administrator role also has an operand to indicate when it is logged on.
- **Engineer**: This role has similar rights to the Administrator role, except that some commands, the security settings modification and firmware upload are not allowed.
- **Operator**: The Operator role is present to facilitate operational actions that may be programmed and assigned to buttons on the front panel. The Operator has read/write access to all settings under the command menu/section. The Operator can also use the Virtual Input command under the control menu/section. The Operator can view settings from EnerVista or the front panel but does not have the ability to change any settings. This role is not a concurrent role.
- **Viewer**: The Viewer role has read-only access to all 8 Series settings. This role allows concurrent access. The Viewer is the default role if no authentication has been done to the device. This role can download settings files and records from the device.
- **Factory**: This is an internal non-user accessible role used for manufacturing diagnostics. The ability to enable or disable this role is a security setting that the Administrator controls.

GENERAL RULES FOR USER ROLES WITH CYBERSENTRY

1. The only concurrent role is Observer. If the user is logged in through serial, front panel, or over the network, that counts as the role being logged in for concurrency reasons.
2. Both EnerVista and the front panel provide a one-step logoff. For the front panel, the root menu has a logoff command. From EnerVista right-clicking on a device and providing a logoff function from the context menu is sufficient.
3. The EnerVista Login Screen has **User Name:** and **Password:** fields for the default remote (Radius) authentication, but when a **Local Authentication** checkbox is selected the **User Name:** field changes to a drop down menu where the user can select one of the predefined roles.

1.7 ORDER CODES

Support of some of the features are order code dependent. Each relay is ordered with a number of required and optional modules. Each of these modules can be supplied in a number of configurations specified at the time of ordering. The information to specify a relay model is provided in the following Order Code table:

ORDER CODE FOR 850 FEEDER PROTECTION SYSTEM																						
Pos.	1	2	3	4	5	6	7	8	9	10	11	12	13	14	15	16	17	18	19	20	21	
850	D	L5	R5	P5	H	N	N	A	A	A	M	D	S	D	C	SE		S	N	B	N	Example 850
																						APPLICATION
	E																					Industrial
	D																					Distribution Feeder
																						PHASE CURRENTS - SLOT J
		P1																				1A three-phase current inputs (J1), 4 voltage inputs (J2)
		P5																				5A three-phase current inputs (J1), 4 voltage inputs (J2)
																						PHASE CURRENTS - SLOT K
			NN																			No phase current inputs (Slot K)
			P1																			1A three-phase current inputs (K1), 4 voltage inputs (K2)
			P5																			5A three-phase current inputs (K1), 4 voltage inputs (K2)
																						GROUND CURRENTS
				G1																		1A ground input
				G5																		5A ground input
				S1																		1A ground input (J1), 1A sensitive ground input (K1)
				S5																		5A ground input (J1), 5A sensitive ground input (K1)
				Y1																		5A ground input (J1), 1A sensitive ground input (K1)
				Y5																		1A ground input (J1), 5A sensitive ground input (K1)
				D1																		1A ground input (J1), 1A polarizing current input (K1)
				D5																		5A ground input (J1), 5A polarizing current input (K1)
																						POWER SUPPLY
					H																	125 to 250 V DC/100 to 240 V AC
					R																	125 to 250 V DC/100 to 240 V AC - Extended Ride-through
					L																	24 to 48 VDC
																						SLOT B
						N																None
						S																6 X RTDs (Pt100, Ni100, Ni120, Cu10)
						C																15 Digital Inputs (Low / High voltage, Ext Supply)
																						SLOT C
							N															None
							S															6 X RTDs (Pt100, Ni100, Ni120, Cu10)
							C															15 Digital Inputs (Low / High voltage, Ext Supply)
																						SLOT F
								A														2 Form A (Vmon) Relays, 2 Form C Relays, 1 Critical Failure Relay, 7 Digital Inputs (Int/Ext Supply)
								M														4 SSR (High-Speed, High-Break), 1 Critical Failure Relay, 7 Digital Inputs (Int/Ext Supply)

ORDER CODE FOR 850 FEEDER PROTECTION SYSTEM																						
Pos.	1	2	3	4	5	6	7	8	9	10	11	12	13	14	15	16	17	18	19	20	21	
																						SLOT G
									N													None
									A													2 Form A Relays, 3 Form C Relays, 7 Digital Inputs (Int/Ext Supply)
									B													9 Form A Relays, 10 Digital Inputs
									D													8 Double Pole Outputs
									T													4 SSR (High-Speed, High-Break), 2 Form A Relay, 4 Arc Flash Inputs (Point and Loop Sensors)
									K													5 Form A Relays, 1 Form C Relay, 10 Digital Inputs
									L													7 DcmA O/P, 4 DcmA I/P, 1 RTD
									M													4 SSR (High-Speed, High-Break), 1 Form C Relay, 7 Digital Inputs (Int/Ext Supply)
									P													8 Double Pole Outputs - C
																						SLOT H
										N												None
										A												2 Form A Relays, 3 Form C Relays, 7 Digital Inputs (Int/Ext Supply)
										B												9 Form A Relays, 10 Digital Inputs
										D												8 Double Pole Outputs
										F												10 Digital Inputs, 4 Arc Flash Inputs (Point Sensors)
										T												4 SSR (High-Speed, High-Break), 2 Form A Relay, 4 Arc Flash Inputs (Point and Loop Sensors)
										K												5 Form A Relays, 1 Form C Relay, 10 Digital Inputs
										M												4 SSR (High-Speed, High-Break), 1 Form C Relay, 7 Digital Inputs (Int/Ext Supply)
										P												8 Double Pole Outputs - C
																						FACEPLATE
											M											Basic: Membrane Keypad with 3 Pushbuttons
											A											Advanced: Membrane Keypad with 10 Pushbuttons
																						CURRENT PROTECTION
												S										Basic (850-E): 50P (2), 50N (2), 50G (1), 51P (2), 51N (2), 51G (1)
												M										Standard (850-E): Basic, 50SG (1), 50_2 (1), 51SG (1), 51_2 (1), RGF (1)
												D										Standard (850-D): 37 (3), 50P (4/CT bank), 50N (4/CT bank), 50G (4/CT bank), 51P (6 4), 51PP (2), 51N (4), 51G (2/CT bank), 50SG (4/CT bank), 50_2 (4/CT bank), 51SG (2/CT bank), 51_2 (2/CT bank), RGF (3), SOTF (3/Bkr), 67P (4), 67N (4), 67G (1/CT bank), 67SG (1/CT bank), 67_2 (1/CT bank), 49 (2), Load Encroachment (1/CT bank), Broken Conductor (3)
												A										Advanced (850-E): Standard, 67P (1), 67N (1), 67G (1), 67SG (1), 67_2 (1), 49 (2), Load Encroachment (1), Broken Conductor (1)
																						VOLTAGE MONITORING AND PROTECTION

ORDER CODE FOR 850 FEEDER PROTECTION SYSTEM																					
Pos.	1	2	3	4	5	6	7	8	9	10	11	12	13	14	15	16	17	18	19	20	21	
													S									Standard (850-E): 27P (4/VT bank), 27X (2/VT bank), 59P (4), 59N (4), 59X (2/VT bank), 81O (6/VT bank), 81U (6/VT bank)
													P									Advanced (850-D): 25 (1/CT bank), 27P (4/VT bank), 27X (2/VT bank), 27T (4), 27Q (3/Bkr), 32 (4), 32N (4), 55 (4), 59P (4), 59N (4), 59X (2/VT bank), 59_2 (2/VT bank), 81O (6/VT bank), 81U (6/VT bank), 81R (6/VT bank), Fast U/F (8), Neutral Admittance (4), *UV Restoration (1/Bkr), *UF Restoration (1/Bkr) Advanced (850-E): Standard, 25 (1/CT bank), 27T (4), 27Q (3/Bkr), 32 (4), 32N (4), 55 (4), 59_2 (2/VT bank), 81R (6/VT bank), Fast U/F (8), Neutral Admittance (4), UV Restoration (1/Bkr), UF Restoration (1/Bkr)
																						CONTROL
														B								Basic = Setpoint Group Control, Virtual Inputs, Trip Bus, Breaker Control, VTFF, Digital Elements
														F								Standard (850-E): Setpoint Group Control, Virtual Inputs, Trip Bus, Breaker Control, VTFF, Digital Elements, FlexLogic, CLP, 50BF (2/CT bank), CT Supervision (3)
														D								Standard = Setpoint Group Control, Virtual Inputs, Trip Bus (6), Breaker Control (1/Bkr), VTFF (1/ VT bank), Digital Elements, FlexLogic, CLP (1/Bkr), 50BF (2/CT bank), Pole Discordance (3), Autorelcose (1/Bkr), CT Spvn (3)
														P								Standard = Setpoint Group Control, Virtual Inputs, Trip Bus (6), Breaker Control (2), Digital Elements, FlexLogic, 50BF (1/CT bank)
														C								Advanced (850-E): Standard, Autoreclose, Bus Transfer (Requires voltage option P)
														H								Advanced HMI (850-E): Advanced, Tab Pushbuttons, Annunciator Panel, Configurable SLDs with Bay Control
														T								Advanced HMI (850-D): Setpoint Group Control, Virtual Inputs, Trip Bus (6), Breaker Control (1/Bkr), VTFF (1/VT bank), FlexLogic, CLP (1/Bkr), 50BF (2/CT bank), Pole Discordance (3), Autoreclose (1/Bkr), CT Supervision (3), Tab Pushbuttons, Annunciator Panel, Configurable SLDs with Bay Control
																						MONITORING
															B							Basic (850-E): Breaker Coil Monitoring (1/Bkr), Breaker Arcing (1/Bkr), THD, Current Demand (1/CT bank), Digital Counters (16), Data Logger, Power Quality (3)
															C							Standard (850-E): Basic, Advanced Breaker Health (1/Bkr)
															A							Advanced (850-D): Breaker Coil Monitoring (1/Bkr), Breaker Arcing (1/Bkr), THD, Current Demand (1/CT bank), Digital Counters (16), Data Logger, Power Quality (3), Advanced Breaker Health (1/Bkr), Harmonic Detection (6), TGFD (1/Bkr), Incipient fault detection Advanced (850-E): Standard, Harmonic Detection (6), TGFD (1/Bkr), Incipient fault detection

ORDER CODE FOR 850 FEEDER PROTECTION SYSTEM																						
Pos.	1	2	3	4	5	6	7	8	9	10	11	12	13	14	15	16	17	18	19	20	21	
															H							Advanced (850-D): Breaker Coil Monitoring (1/Bkr), Breaker Arcing (1/Bkr), THD, Current Demand (1/CT bank), Digital Counters (16), Data Logger, Power Quality (3), Advanced Breaker Health (1/Bkr), Harmonic Detection (6), TGFD (1/Bkr), HiZ Advanced (850-E): Standard, Harmonic Detection (6), TGFD (1/Bkr), HiZ
																						COMMUNICATIONS
																S	E					Standard: Front USB, 1x Rear RS485 (Modbus RTU/TCP, DNP 3.0, IEC 60870-5-103), 1x Ethernet RJ45 port (Modbus TCP, DNP).
																1	E					Advanced: Standard + IEC 60870-5-104, 1588, SNTP, OPC-UA
																1	P					Advanced + PRP + HSR
																3	A					Advanced + IEC 61850
																3	E					Advanced + PRP + HSR + IEC 61850
																4	E					Advanced + 1x additional RS485 Port + HSR + PRP + IEC 61850
																						ADVANCED COMMUNICATIONS CONNECTOR
																		N				None. No additional communication ports. RJ45 Port 1 Enabled, RJ45 Port 2 disabled
																		S				ST, Multi-mode 1310nm - With 1E to 3E, the user gets 2x Fiber ST Ports. RJ45 ports 1 and 2 are disabled. With 4E, user gets 2x Fiber ST ports and 2xRJ45 Ports
																		C				RJ45, Copper 10/100M - With 1E to 3E, the user gets 2x RJ45 ports. RJ45 ports 1 and 2 are disabled. With 4E, user gets 4x RJ45 Ports
																		T				1x additional RS485 Port and 1x additional RJ45 Copper 10/100M port
																						WIRELESS COMMUNICATION
																			N			None
																			W			WiFi 802.11
																						SECURITY
																				B		Basic
																				A		Advanced: CyberSentry Level 1
																						FW OPTION
																					N	FW version 3.xx or earlier
																					4	FW version 4.xx

- Harsh Environment Coating is a standard feature on all relays.
- Advanced security is only available with advanced communications (1E, 1P, 3A, 3E). When you select the advanced communications option, the Ethernet port on the main CPU is disabled.
- Retrofit order codes must be configured using the GE Multilin Online Store (OLS) based on the existing relay order code and additional requirements. Refer to the GE website and search for the **Buy Retrofit Kit** for further information.

Remote Module I/O (RMIO)

The Remote RTD module provides additional protection.

RMIO[1] –	*	G	G	*	*	
Power Supply	**L**	|	|	|	|	24 - 48 V DC
	H	|	|	|	|	110 - 250 V DC / 110 - 230 V AC
I/O Module 1		**G**	|	|	|	Remote Module I/O (3 - 100 Ohm Platinum RTDs)
I/O Module 2			**G**	|	|	Remote Module I/O (3 - 100 Ohm Platinum RTDs)
I/O Module 3[2]				**G**	|	Remote Module I/O (3 - 100 Ohm Platinum RTDs)
				X	|	None
I/O Module 4					**G**	Remote Module I/O (3 - 100 Ohm Platinum RTDs)
					X	None

1. RMIO requires firmware version 2.00 and later and hardware version B. Check the hardware version under **Status > Information > Main CPU**. If RMIO support is required for relays with earlier hardware versions, contact the factory.
2. RMIO comes standard with 6 RTDs (Modules 1 and 2).

892800RMIO-A1.fm

Other Accessories

- 18J0-0030 8 Series Depth Reducing Collar - 1 3/8”
- 18J0-0029 8 Series Depth Reducing Collar - 3”
- 8 Series Retrofit Kit, 750/760 to 850
- 8 Series Retrofit Kit, 735 to 850

1.8 CAUTIONS, WARNINGS AND NOTES

Before attempting to install or use the device, review all safety indicators in this document to help prevent injury, equipment damage, or downtime.

1.8.1 SAFETY WORDS AND DEFINITIONS

The following symbols and formatting are used in this document indicate certain types of information:

Caution:
Refer to equipment documentation. Failure to do so could result in damage to the equipment

Warning:
Risk of electric shock

Warning:
Risk of damage to eyesight

Note:
Indicates practices not related to personal injury.

1.8.2 GENERAL CAUTIONS AND WARNINGS

The following general safety precautions and warnings apply.

Caution:
Before attempting to use the equipment, it is important that all danger and caution indicators are reviewed.
If the equipment is used in a manner not specified by the manufacturer or functions abnormally, proceed with caution. Otherwise, the protection provided by the equipment may be impaired and can result in impaired operation and injury.

Warning:
Hazardous voltages can cause shock, burns or death.

Caution:
Installation/service personnel must be familiar with general device test practices, electrical awareness and safety precautions must be followed.
Before performing visual inspections, tests, or periodic maintenance on this device or associated circuits, isolate or disconnect all hazardous live circuits and sources of electric power.

Warning:
Failure to shut equipment off prior to removing the power connections could expose you to dangerous voltages causing injury or death.
Ensure that all connections to the product are correct so as to avoid accidental risk of shock and/or fire, for example from high voltage connected to low voltage terminals.

Caution:
Follow the requirements of this manual, including adequate wiring size and type, terminal torque settings, voltage, current magnitudes applied, and adequate isolation/clearance in external wiring from high to low voltage circuits.
Use the device only for its intended purpose and application.
Ensure that all ground paths are un-compromised for safety purposes during device operation and service.
All recommended equipment that should be grounded and must have a reliable and un-compromised grounding path for safety purposes, protection against electromagnetic interference and proper device operation.
Equipment grounds should be bonded together and connected to the facility's main ground system for primary power.
Keep all ground leads as short as possible.
In addition to the safety precautions mentioned all electrical connections made must respect the applicable local jurisdiction electrical code.
It is recommended that a field external switch, circuit breaker be connected near the equipment as a means of power disconnect. The external switch or circuit breaker is selected in accordance with the power rating.
This product itself is not Personal Protective Equipment (PPE). However, it can be used in the computation of site specific Arc Flash analysis when the arc flash option is ordered. If a new appropriate Hazard Reduction Category code for the installation is determined, user should follow the cautions mentioned in the arc flash installation section.
The critical failure relay must be connected to annunciate the status of the device for ALL applications. This is particularly important for when the Arc Flash option is ordered.
Ensure that the control power applied to the device, the AC current, and voltage input match the ratings specified on the relay nameplate. Do not apply current or voltage in excess of the specified limits.
Only qualified personnel are to operate the device. Such personnel must be thoroughly familiar with all safety cautions and warnings in this manual and with applicable country, regional, utility, and plant safety regulations.

Warning:
Hazardous voltages can exist in the power supply and at the device connection to current transformers, voltage transformers, control, and test circuit terminals. Make sure all sources of such voltages are isolated prior to attempting work on the device.
Hazardous voltages can exist when opening the secondary circuits of live current transformers. Make sure that current transformer secondary circuits are shorted out before making or removing any connection to the current transformer (CT) input terminals of the device.

Caution:
For tests with secondary test equipment, ensure that no other sources of voltages or currents are connected to such equipment and that trip and close commands to the circuit breakers or other switching apparatus are isolated, unless this is required by the test procedure and is specified by appropriate utility/plant procedure.
When the device is used to control primary equipment, such as circuit breakers, isolators, and other switching apparatus, all control circuits from the device to the primary equipment must be isolated while personnel are working on or around this primary equipment to prevent any inadvertent command from this device.
Use an external disconnect to isolate the mains voltage supply.

Warning:
LED transmitters are classified as IEC 60825-1 Accessible Emission Limit (AEL) Class 1M. Class 1M devices are considered safe to the unaided eye. Do not view directly with optical instruments.

Note:
To ensure the settings file inside the relay is updated, wait 30 seconds after a setpoint change before cycling power. This product is rated to Class A emissions levels and is to be used in Utility, Substation Industrial environments. Not to be used near electronic devices rated for Class B levels.

1.9 MUST-READ INFORMATION

The following general statements apply and are repeated in the relevant sections of the manual.

- Before upgrading firmware, it is very important to save the current settings to a file on your PC. After the firmware has been upgraded, it is necessary to load this file back into the device.
- The ***SNTP*** and ***IRIG-B*** settings take effect after rebooting the relay.
- Commands may be issued freely through other protocols than Modbus (i.e., DNP, IEC 104, and, IEC 61850) without user authentication or encryption of data taking place, even if the relay has the advanced security feature enabled.
- Note that the factory role password may not be changed.
- Both DNP and IEC104 protocols can work at the same time, but consider that there is only one point map. So, both protocols use the same configured points.
- The 52b contact is closed when the breaker is open and open when the breaker is closed.
- The Phase Directional element responds to the forward load current. In the case of a following reverse fault, the element needs some time – in the order of 8 ms – to change the directional signal. Some protection elements such as Instantaneous Overcurrent may respond to reverse faults before the directional signal has changed. A coordination time of at least 10 ms must therefore be added to all the instantaneous protection elements under the supervision of the Phase Directional element. If current reversal is a concern, a longer delay – in the order of 20 ms – is needed.
- The same curves used for the time overcurrent elements are used for Neutral Displacement. When using the curve to determine the operating time of the Neutral Displacement element, substitute the ratio of neutral voltage to Pickup level for the current ratio shown on the horizontal axis of the curve plot.
- The relay is not approved as, or intended to be, a revenue metering instrument. If used in a peak load control system, consider the accuracy rating and method of measurement employed, and the source VTs and CTs, in comparison with the electrical utility revenue metering system.
- In bulk oil circuit breakers, the interrupting time for currents is less than 25% of the interrupting rating and can be significantly longer than the normal interrupting time.
- For future reference, make a printout of the conversion report immediately after the conversion in case conversion reports are removed or settings modified from the 8 Series Setup Software.
- To monitor the trip coil circuit integrity, use the relay terminals “FA_1 NO” and “FA_1 COM” to connect the Trip coil, and provide a jumper between terminals “FA_1 COM” and “FA_1 OPT/V” voltage monitor).
- WiFi and USB do not currently support CyberSentry security. For this reason WiFi is disabled by default if the CyberSentry option is purchased. WiFi can be enabled, but be aware that doing so violates the security and compliance model that CyberSentry is supposed to provide.
- In Power factor monitoring, ***SWITCH-IN*** and ***SWITCH-OUT*** are mutually exclusive settings. (845, 850)

1.9.1 STORAGE

Store the unit indoors in a cool, dry place. If possible, store in the original packaging. Follow the storage temperature range outlined in the Specifications.

If applicable, use the factory-provided dust caps on all Arc Flash sensor fiber and connectors when not in use, to avoid dust contamination in the transceiver and sensor plugs.

1.10 FOR FURTHER ASSISTANCE

For product support, contact us as follows:

GE Vernova

650 Markland Street

Markham, Ontario

Canada L6C 0M1

Worldwide telephone: +1 905 927 7070

Europe/Middle East/Africa telephone: +34 94 485 88 54

North America toll-free: 1 800 547 8629

Fax: +1 905 927 5098

Worldwide e-mail: multilin.tech@ge.com

Europe e-mail: multilin.tech.euro@ge.com

Website: https://www.gevernova.com/grid-solutions

1.10.1 REPAIRS

The firmware and software can be upgraded without return of the device to the factory.

For issues not solved by troubleshooting, the process to return the device to the factory for repair is as follows:

- Contact a GE Grid Solutions Technical Support Center. Contact information is found in the first chapter.
- Obtain a Return Materials Authorization (RMA) number from the Technical Support Center.
- Verify that the RMA and Commercial Invoice received have the correct information.
- Tightly pack the unit in a box with bubble wrap, foam material, or styrofoam inserts or packaging peanuts to cushion the item(s). You may also use double boxing whereby you place the box in a larger box that contains at least 5 cm of cushioning material.
- Ship the unit by courier or freight forwarder, along with the Commercial Invoice and RMA, to the factory.
- Customers are responsible for shipping costs to the factory, regardless of whether the unit is under warranty.
- Fax a copy of the shipping information to the GE Grid Solutions service department.

Use the detailed return procedure outlined at

https://www.gegridsolutions.com/multilin/support/ret_proc.htm

The current warranty and return information are outlined at

https://www.gegridsolutions.com/multilin/warranty.htm

CHAPTER 2

INSTALLATION

2.1 CHAPTER OVERVIEW

This chapter describes the mechanical and electrical installation of the relay.

This chapter contains the following sections:

Chapter Overview	27
Product Identification	28
Dimensions	29
Mounting	30
Draw-out Unit Withdrawal and Insertion	35
Removable Power Supply	37
Removable Magnetic Module	38
Remote Module I/O (RMIO)	41
IP20 Back Cover	43
Arc Flash Sensor	44
Physical considerations of wiring	52
Terminal connections	55
Terminal Identification	58
RMIO Module Installation	61
Phase Sequence and Transformer Polarity	63
Ground and Sensitive Ground CT Inputs	64
Zero-Sequence CT Installation	66
Voltage Inputs	67
Restricted Ground Fault Inputs	68
Control Power	69
Contact Inputs	70
Serial Communications	77
IRIG-B	78
Typical Wiring Diagram	79

2.2 PRODUCT IDENTIFICATION

The product identification label is located on the side panel of the relay. This label indicates the product model, serial number, and date of manufacture. The following figure shows an example of such a label.

> *Note:*
> *This example label is specific to a particular order of the 850 and may not represent your model.*

Figure 4: Product label example

2.3 DIMENSIONS

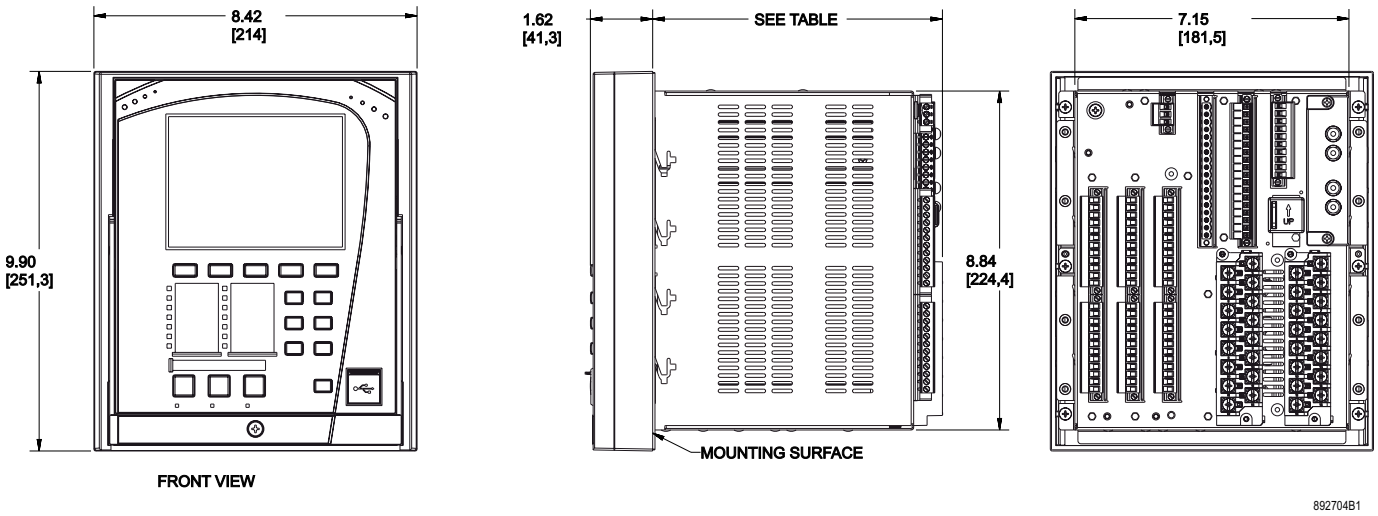

The relay dimensions are shown below. Additional dimensions for mounting, and panel cutouts, are shown in the following sections.

Figure 5: Relay Dimensions

2.4 MOUNTING

The relay can be mounted two ways: standard panel mount or optional tab mounting, if required.

- **Standard panel mounting:** From the front of the panel, slide the empty case into the cutout. From the rear of the panel, screw the case into the panel at the 8 screw positions.
- **Optional tab mounting:** The V tabs are located on the sides of the case and appear as shown in the following figure. Use needle nose pliers to bend the retaining V tabs outward to about 90°. Use caution and do not bend and distort the wall of the enclosure adjacent to the tabs. The relay can now be inserted and can be panel wired.

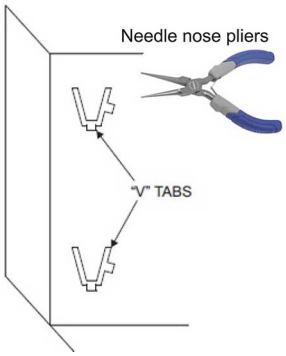

Figure 6: V Tabs Located on Case Side

2.4.1 STANDARD PANEL MOUNT

The standard panel mount and cutout dimensions are illustrated below.

Caution:
To avoid the potential for personal injury due to fire hazards, ensure the unit is mounted in a safe location and/or within an appropriate enclosure.

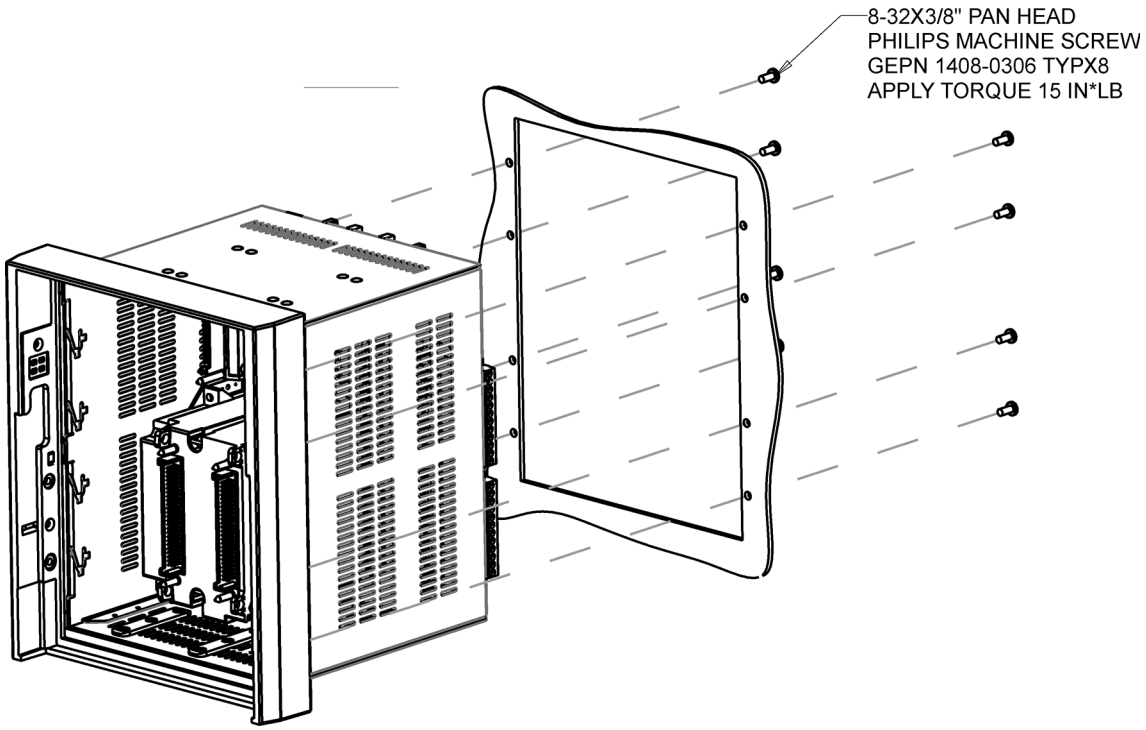

Figure 7: Standard panel mount

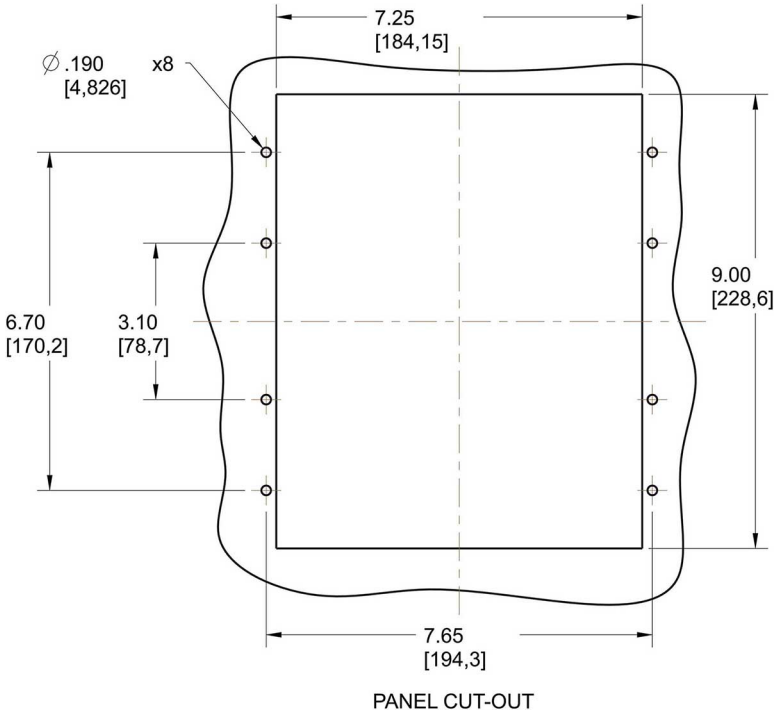

Figure 8: Panel cutout dimensions

Depth reducing collar

Three different sizes of optional depth reducing collar are available for mounting relays in narrow-depth service panels, or wherever space is an issue.

Note:
The drill hole locations are different when a depth reducing collar is used. See the Depth reducing collar panel cutout figure below.

- 18J0-0030 8 Series Depth Reducing Collar - 1 3/8”
- 18J0-0029 8 Series Depth Reducing Collar - 3”
- 18J0-0184 8 Series Depth Reducing Collar - 3 3/4”

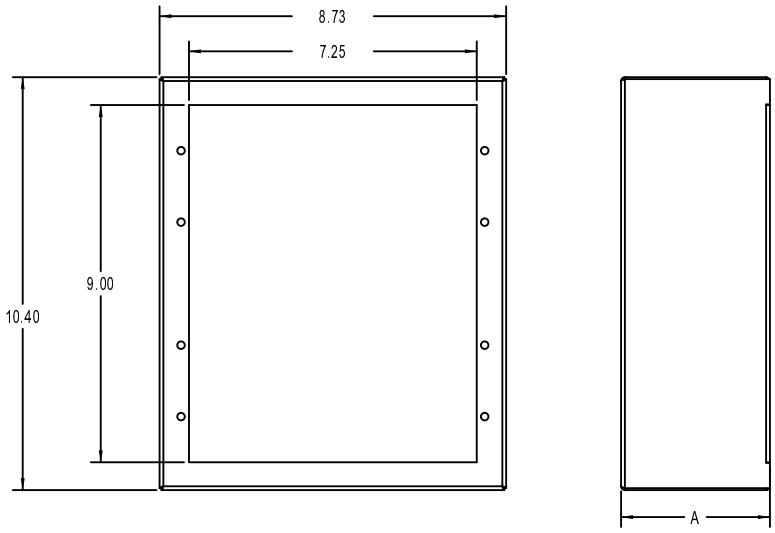

DIMENSIONS IN INCHES

GEPN	'A' DEPTH
1009-0310	1 3/8"
1009-0311	3"
1009-0350	3 3/4"

892703A2.cdr

Figure 9: Depth reducing collar dimensions

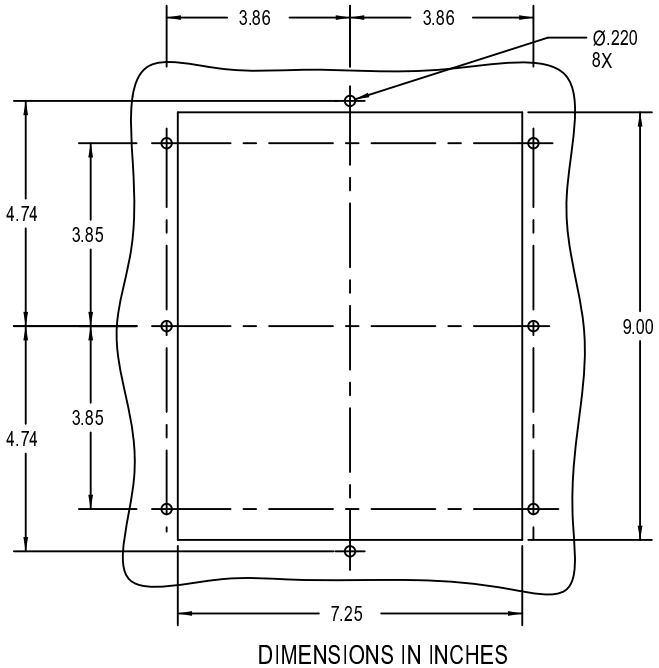

Figure 10: Depth reducing collar panel cutout

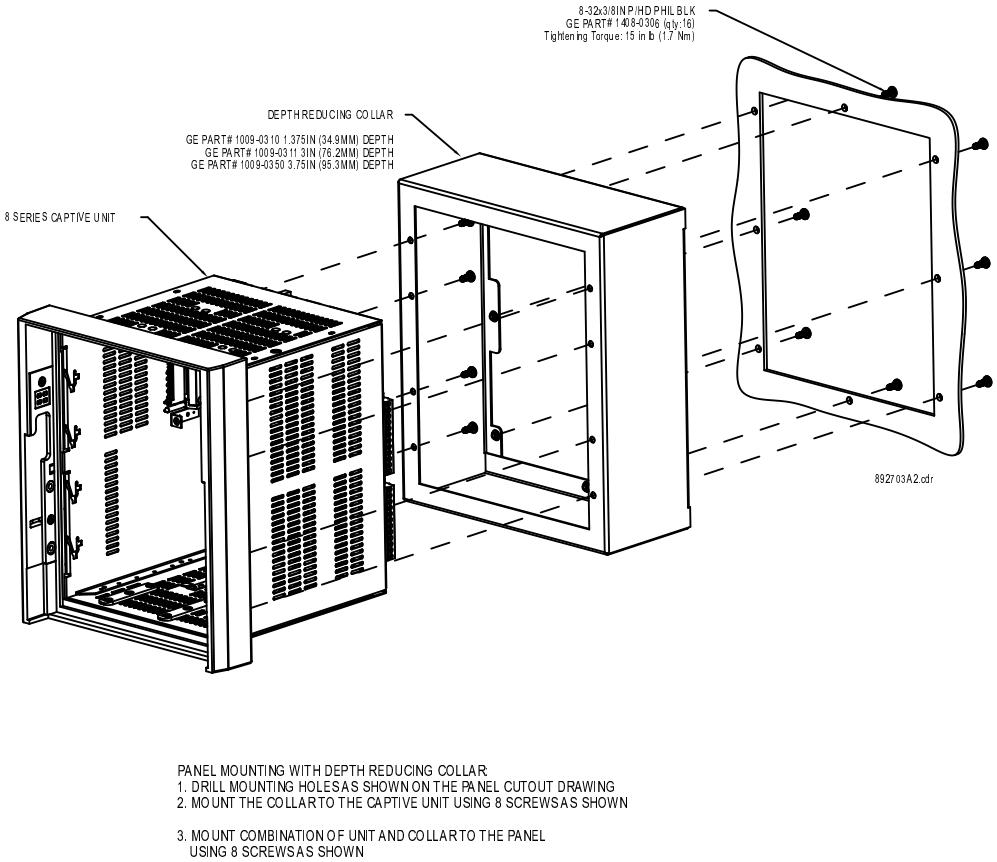

Figure 11: Depth reducing collar installation

To mount an 8 Series relay with a depth reducing collar, follow these steps:

1. Drill mounting holes as shown on the Depth reducing collar panel cutout figure above.
2. Mount the collar on the captive unit using eight screws.
3. Mount the combined unit and collar on the panel using eight screws.

2.5 DRAW-OUT UNIT WITHDRAWAL AND INSERTION

Caution:
Turn off control power before drawing out or re-inserting the relay to prevent mal-operation.

Follow the steps outlined in the diagrams below to insert and withdraw.

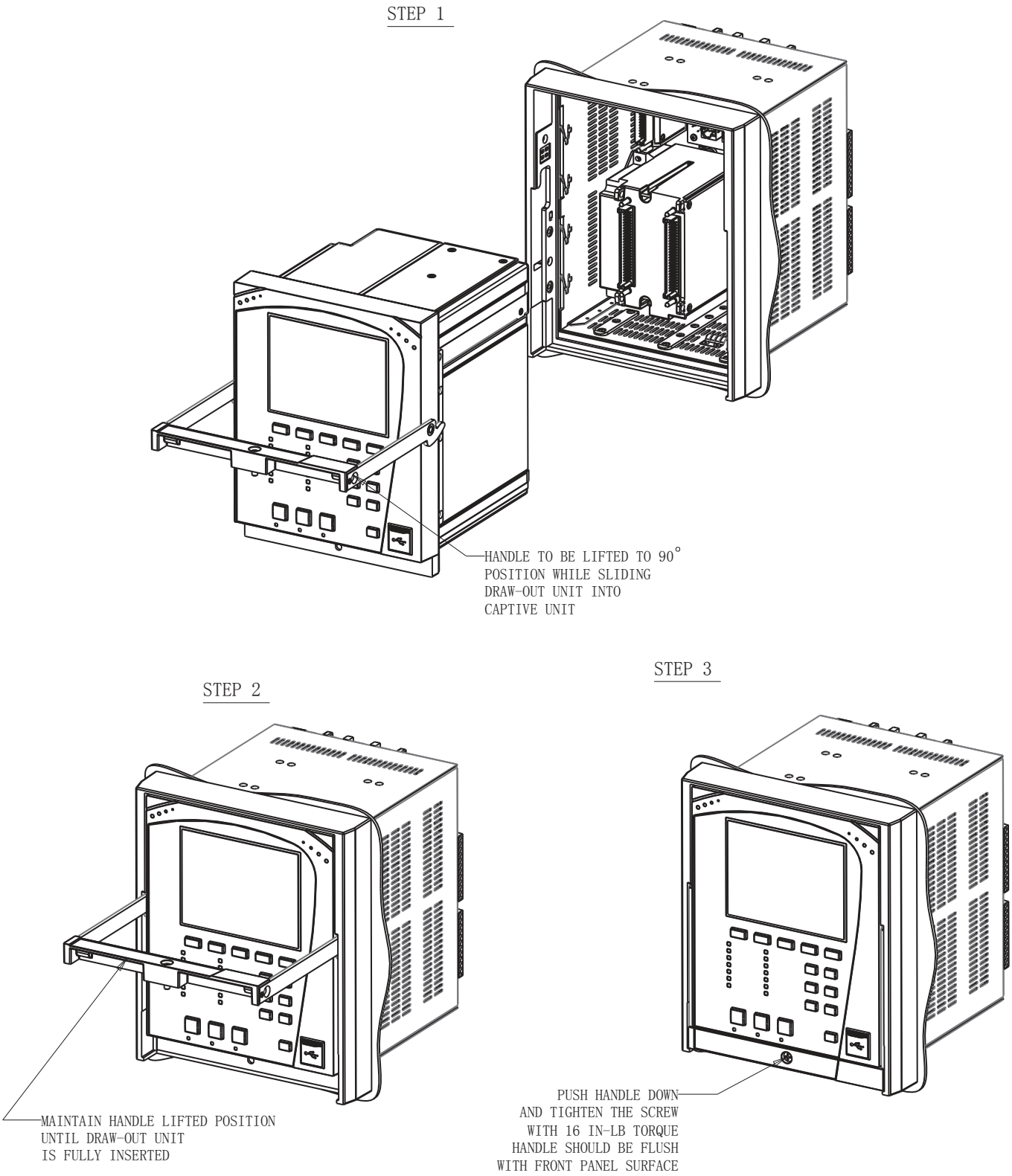

Figure 12: Unit withdrawal and insertion diagram

2.6 REMOVABLE POWER SUPPLY

Follow the steps outlined in the below diagram to insert (#1) or remove (#2) the power supply from the unit.

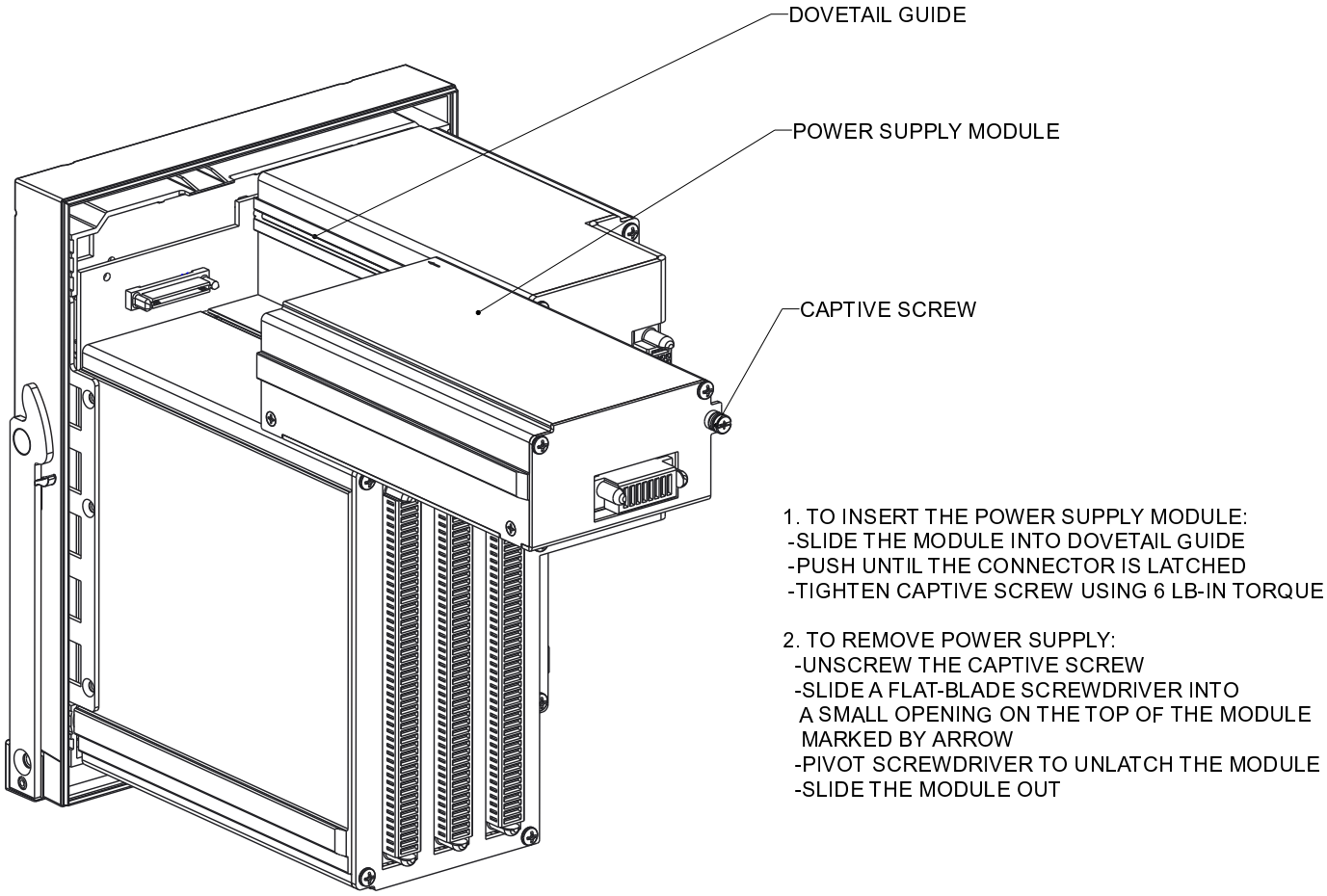

Figure 13: Insert or Remove the Power Supply

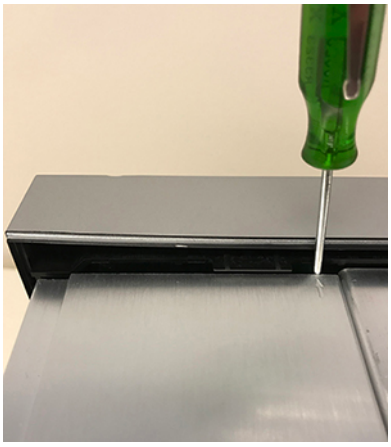

Figure 14: Unlatch Module

2.7 REMOVABLE MAGNETIC MODULE

Warning:
You must follow all preparation steps before removing the CT/VT magnetic module.

Warning:
You must identify all current and voltage sources connected to the relay before starting the removal process.

Warning:
Only suitably-qualified personnel may remove the magnetic module from an installed relay.

Warning:
Appropriate PPE is required based on the arc flash calculations.

Caution:
LOTO (Lockout Tag Out) of the system is required prior to module removal/ replacement.

Follow the procedures outlined below to remove or replace the CT/VT magnetic module.

PREPARATION

1. Shut down and de-energize all systems connected to the relay.
2. Review all cautions and warnings in the introduction.

Warning:
A relay, with the magnetic module removed, does NOT have an internal automatic CT shorting mechanism.

Warning:
Hazardous voltages may exist when opening the secondary circuits of live current transformers.

Warning:
Make sure that in-field current transformer secondary circuits are shorted out before making or removing any connection to the current transformer (CT) input terminals.

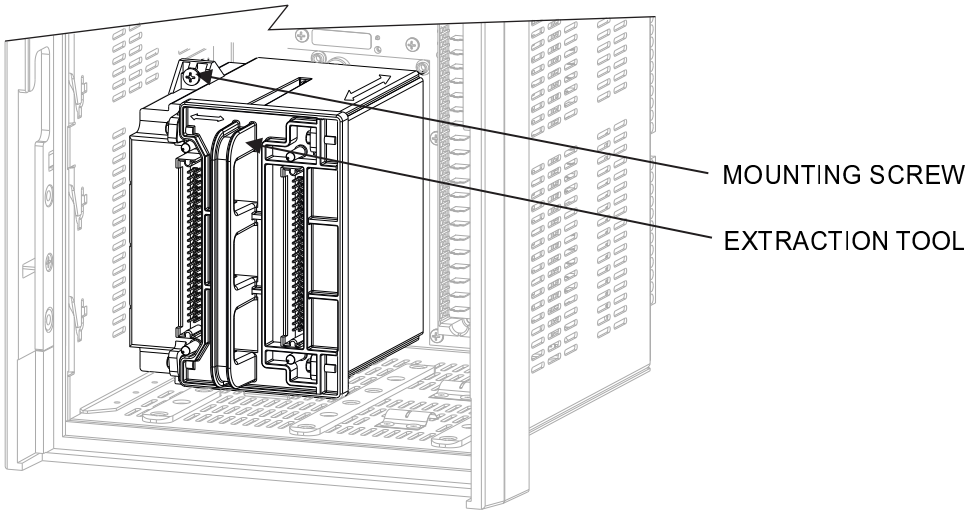

Figure 15: Removing/replacing the CT/VT Magnetic Module

REMOVAL

Caution:
LOTO (Lockout Tag Out) of the system is required prior to module removal/ replacement.

1. Remove the draw-out unit from the chassis. Carefully set aside.
2. Within the captive chassis, unscrew the mounting screw (as indicated in the following figure).
3. Insert the magnetic module extractor tool as shown in the following figure, without engaging the pins.
4. Slide the tool to the left, engaging the pins fully (see arrow in figure).
5. Pull the tool handle towards the operator to disengage the module, and carefully remove the module from the chassis.
6. Remove the tool from the module, and save for future use.

REPLACEMENT

Caution:
LOTO (Lockout Tag Out) of the system is required prior to module removal/ replacement.
Ensure the replacement CT /VT module is the same type as the removed module. Alternate models and configurations may be unsafe for use.

1. Insert the extractor tool into the front of the module, then slide the tool to the left to engage the tool pins.
2. Place the module/tool at the front of the chassis so that it is flush with the left and bottom sides.
3. Slide the module/tool into the back of the chassis as far as it will go, making sure the connectors mate while keeping the module flush to the left and bottom sides of the chassis.
4. Tighten the captive mounting screw using a torque of 6 in-lbs.
5. Remove the tool from the magnetics module and save for future use.
6. Insert the draw-out unit.
7. Re-energize the relay system.
8. Remove the external shorting equipment from the CT inputs.

9. Ensure the In Service LED on the relay front panel is green.
10. Navigate to the Target message screen (press **Home** and then **Targets**) and check that the Target screen does not show any Self-Test errors. Self-Test errors may indicate that the module has not been mounted properly.
11. Verify that CTs and VTs, digital inputs and other circuits are all metering correctly.

2.8 REMOTE MODULE I/O (RMIO)

If using the Remote RTD module, follow these installation steps.

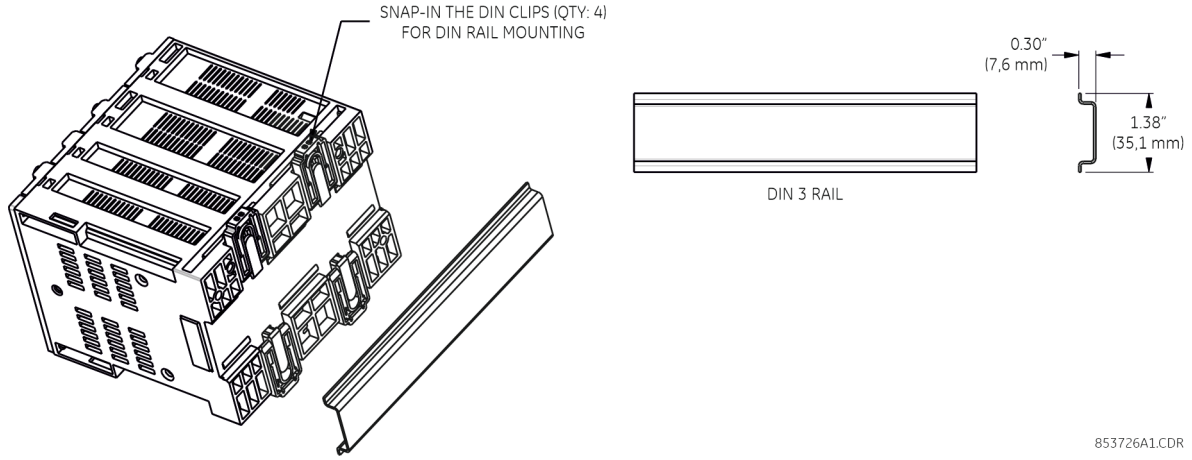

Figure 16: RMIO - DIN rail mounting - Base & Expansion units

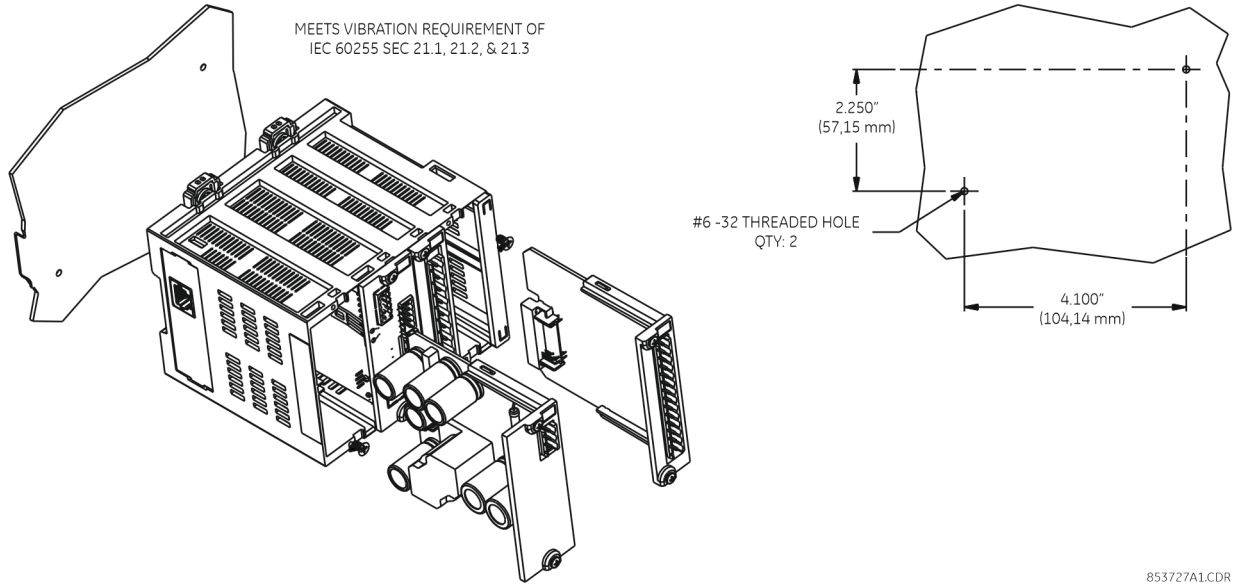

Figure 17: RMIO - Base Unit screw mounting

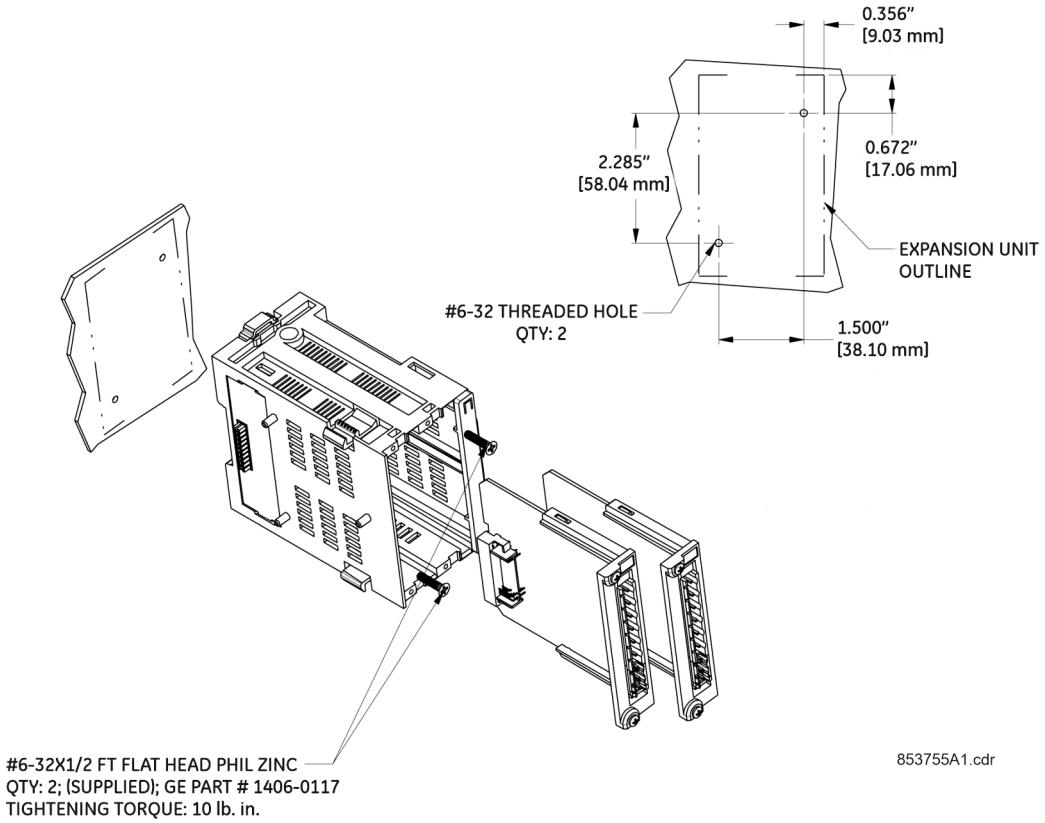

Figure 18: RMIO - Expansion Unit screw mounting

2.9 IP20 BACK COVER

If using the IP20 back cover, follow these installation steps.

1. Place the IP20 cover in the orientation shown over the CT/VT terminal blocks, routing wiring through the cover slots.
2. Secure the cover with the 4 screws provided. Suggested tightening torque is 8 lb-in (0.9 Nm).

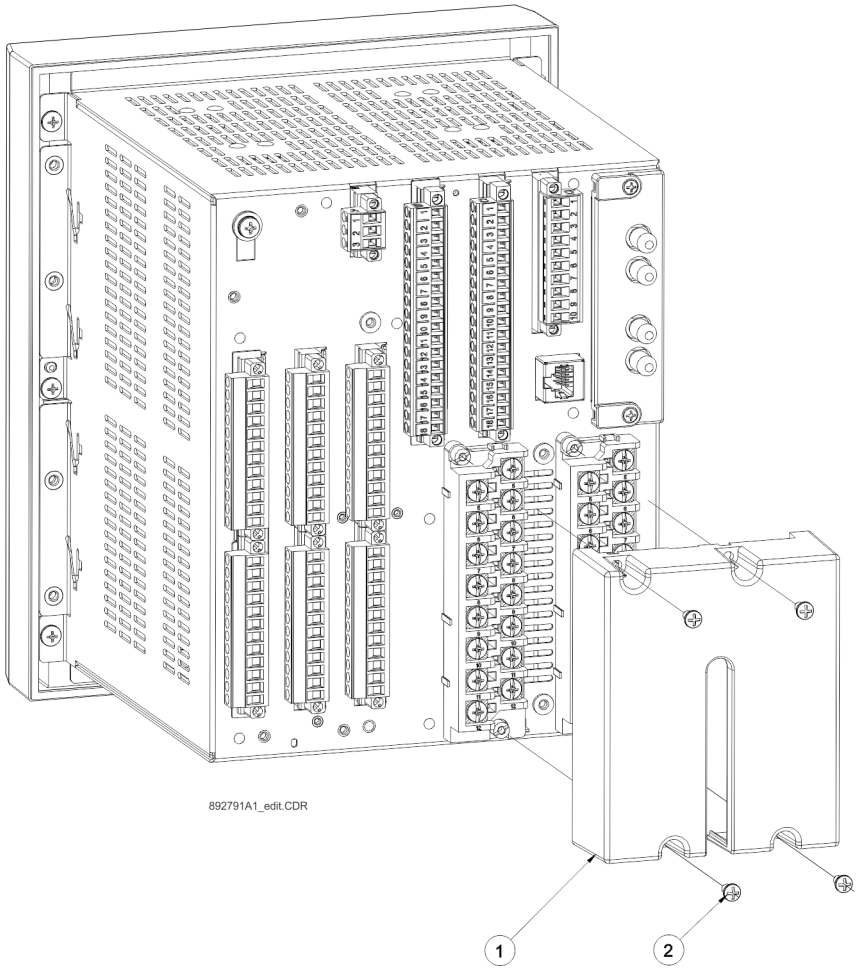

Figure 19: IP20 Back Cover installation

2.10 ARC FLASH SENSOR

The Arc Flash sensor houses the fiber optics that are used to detect the arc flash, there are two types of the sensors: loop sensor and point sensor.

Caution:
If the Arc Flash Protection is used, operands for Arc Flash sensor failures must be assigned to an auxiliary output relay. This must be connected to the control logic of the breaker equipment to ensure safe operations when the output relay is asserted. In the event of this assertion, the Hazard Reduction Category code cannot be maintained unless backup protection is continuing to maintain it.

Caution:
This product uses optical electronic devices (loop or point sensors) to sense arc flash fault conditions. It is recommended to follow proper housekeeping measures & establish a regularly scheduled preventive maintenance routine to ensure proper device operation .

Caution:
Read the following guidelines fully before proceeding.

Care must be taken when handling the Arc Flash sensor fiber, which can be damaged if twisted, bent, or clamped tightly during installation.

• Do not bend sensor fiber sharply, or with a radius of less than 35 mm (1⅓ inches). Sharp bends can damage the fiber. Do not pull or tug loops of sensor fiber, as sharp bends may result.

• Do not clamp sensor fiber tightly during installation. Sensor fiber should be held in place loosely for the best long-term performance. Avoid over-tightening ties which may deform or break the sensor fiber.

• Do not pull or tug sensor fiber with force, as this may cause internal damage or separate the fiber from the cable connector.

• Do not twist the sensor fiber, as twisting can damage the fiber resulting in substandard performance.

• Do not attach sensor fiber directly to the bus or live conductors.

• Avoid installing sensor or sensor fiber on surfaces where temperatures might go above 70 °C or 158 °F to prolong the life of the fiber.

• Secure all sensor fibers (loosely but securely) away from any moving parts.

• When holes are drilled for sensor fiber installation, install rubber grommets around the drilled holes to protect the sensor fiber.

• Before installing arc flash sensor units, ensure that all other drilling and installation is complete to minimize possible damage to the sensitive unit and connected sensor fiber cable.

• Ensure that sensor fiber cable is installed clear from any switchgear moving parts, and can’t be snagged or damaged during any switchgear operations, including maintenance activities.

• Ensure there is no dirt or dust inside the point sensor or on the surface of both the point sensor head and transparent loop sensors because it reduces the capturing efficiency of the device, increases its transmission loss, or both. If the sensor is covered with dust, clean it by blowing or wiping the dust off the point sensor. Dish soap or organic solvents (ethanol based) can be used. Avoid using any other type of corrosive solvents.

• For each of the sensors, plan the path of the sensor carefully, keeping it as short as possible for the point sensor, however extra looping is recommended for the loop sensor

• If a sensor fiber extension is used, ensure that it is long enough to reach the loop sensor without pulling or bending sharply.

• If the bulkhead connectors are used to connect the fiber extension to a loop sensor, mount the bulkhead connector through the drilled ends of the switch gear chamber (if needed to extend from one to another chamber) using below dimensions. Keep in mind that the maximum thickness the bulkhead connector can tolerate is 4.11mm (0.16”), and space the bulkhead connector holes properly to allow for the 11mm (0.42”) installation washers.

Sensor Type

Arc flash sensors are available in two different configurations, point and loop. Loop sensors can be used with a black-coated sensor fiber extension to connect the ends of the loop sensor to the 8 Series relay through panels up to 51 mm (2 inches) thick.

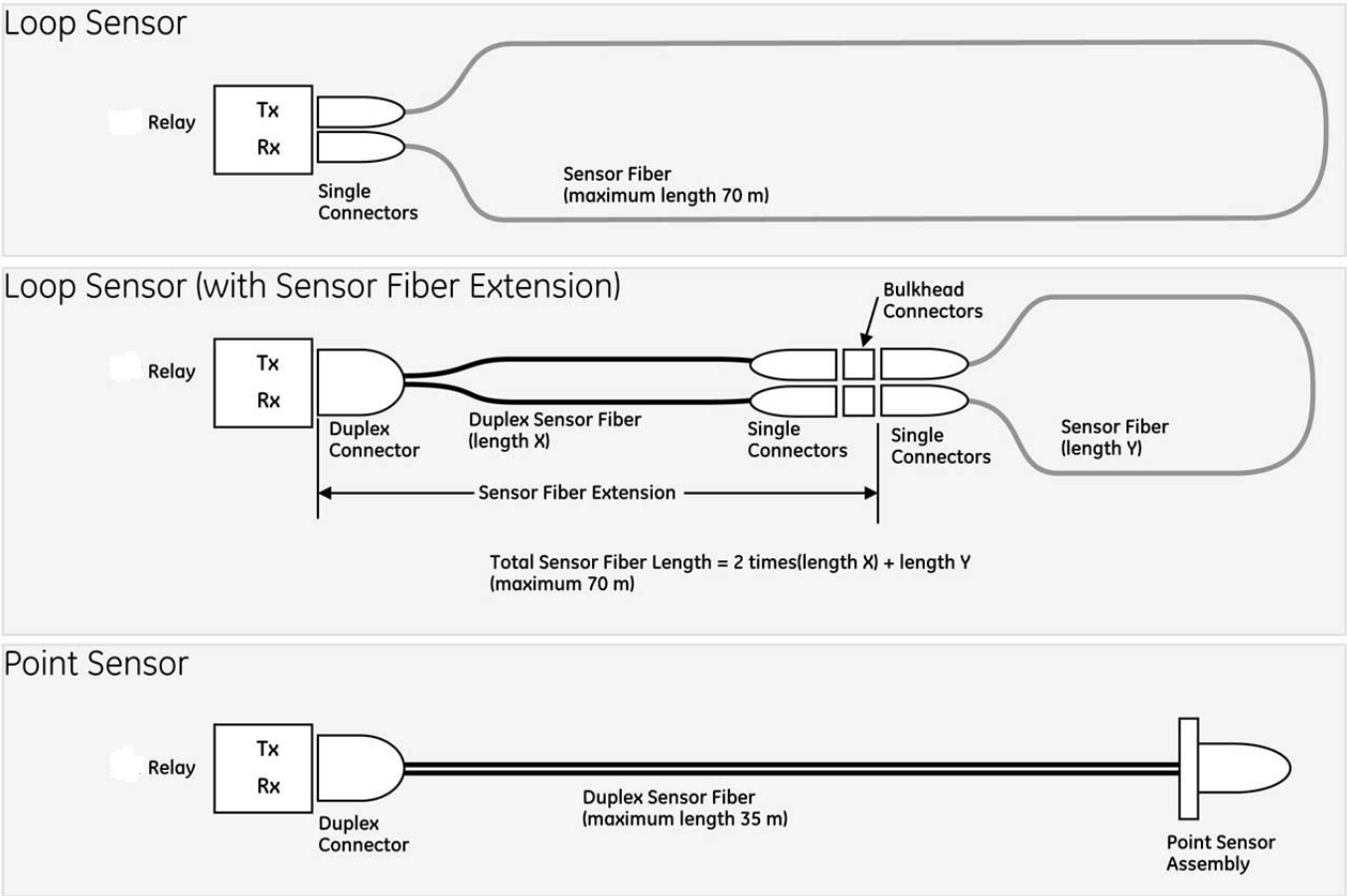

Figure 20: Arc Flash Loop and Point Sensors

Arc flash sensors of either type can be connected to any of the four or eight arc flash ports on the back of the 8 Series relay, as shown.

Figure 21: Arc Flash Sensors connected to the 8 Series relay

Point Sensor Installation

Figure 22: Arc Flash point sensor without sensor fiber connected

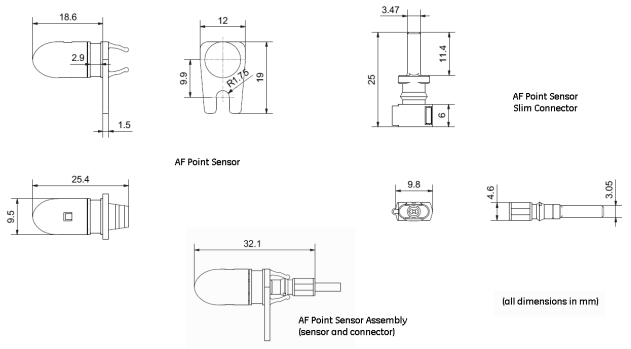

Figure 23: Point sensor and slim connector dimensions

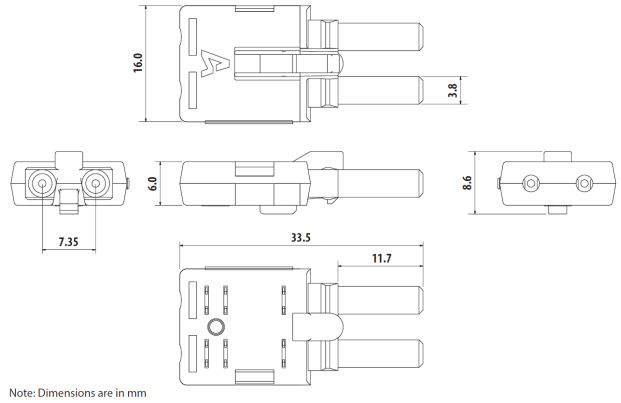

Figure 24: Duplex connector dimensions (point sensor, and sensor fiber extension for loop sensor)

The point sensor fiber includes a duplex connector to connect to the back of the 8 Series relay on one end, and a compressed slim connector that connects to the sensor itself on the other end.

Before installing the AF sensor units, ensure that all other drilling and installation is complete to minimize possible damage to the sensitive unit and connected sensor fiber cable. Choose a location for the sensor clear of any obstructions that could shield the sensor from arc flash light.

> *Note:*
> *Sensor fiber should be held in place loosely for the best long-term performance. Avoid over-tightening ties which may deform or break the sensor fiber.*

General installation

1. Choose a location for the point sensor. Arc flash point sensors should be installed clear of any obstructions that could shield the sensor from arc flash light, and less than 2m (6ft 6") from any potential arc flash source. The sensor head should be pointed towards the most likely source of arc flash.
2. Remove the slim connector from the point sensor assembly.
3. Carefully route the duplex sensor fiber from the point sensor location to the back of the relay unit, minimizing loops and curves for the strongest possible signal. Ensure all sensor fiber handling precautions are followed.

   The slim connecter fits through holes with a diameter of 11 mm or greater, and can be threaded through holes drilled in any panels between the relay and arc flash detection location.
4. Mount the point sensor using either a cable tie mount or through-hole mount, as detailed below.
5. Reconnect the slim connector to the point sensor.

> *Note:*
> *Install protective grommets when routing sensor fiber through metal walls.*

Arc flash point sensors can be installed in one of two ways, using a cable tie mount or a through-hole mount.

Cable tie mount

- Requires a 2.5-mm-wide cable tie.
- Mount the sensor on a stick or similar using the cable tie, as shown in the following figure.

Figure 25: AF point sensor, cable tie mount

Through-hole mount

- Requires a standard or self-tapping M3 screw, and optionally an M3 washer.
- Mount the sensor through a 10 mm hole made in the surface of any mechanical structure inside the switchgear or on the surface of one side of the switchgear itself, as shown in the following figure.

Figure 26:

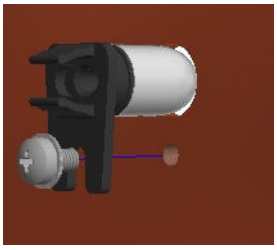

Figure 27: AF point sensor, through-hole mount

Make sure there is no dirt or dust inside the point sensor or on the surface because it reduces the capturing efficiency of the device, increases its transmission loss, or both. If the point sensor is covered with dust, clean it by blowing or wiping the dust off the point sensor.

> *Note:*
> *The material of the point sensor is not affected by water-based cleaning agents, dish soap, or organic solvents with an alcohol (ethanol) base. Do not use solvents or solvent mixtures that contain acids because they can attack or dissolve the optical plastic material.*

Loop sensor installation

The loop sensor transparent sensor fiber has a single connector on either end. The sensor fiber extension has a duplex connector on one end, two single connectors on the other end, and comes with two single bulkhead connectors. Both come in custom lengths, which can be ordered to fit your installation.

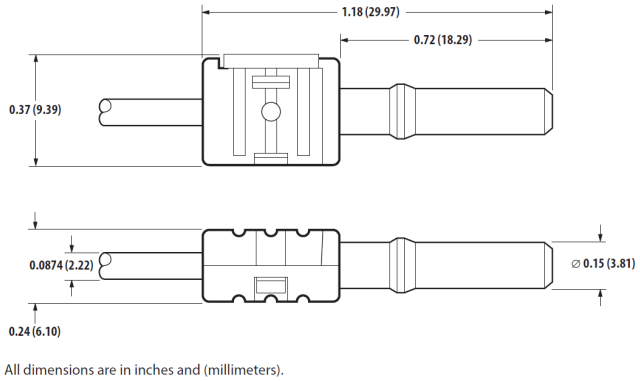

Figure 28: Single connector dimensions (loop sensor, and sensor fiber extension for loop sensor)

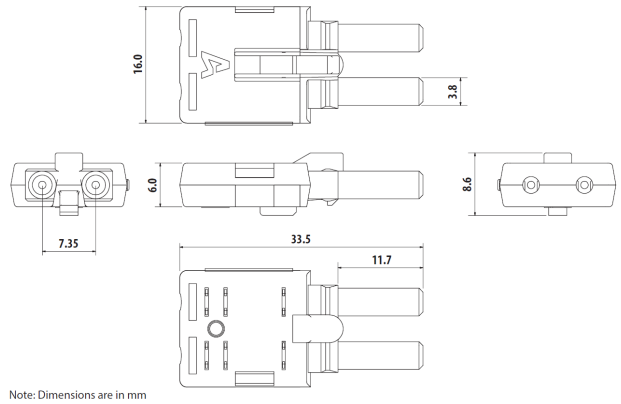

Figure 29: Duplex connector dimensions (point sensor, and sensor fiber extension for loop sensor)

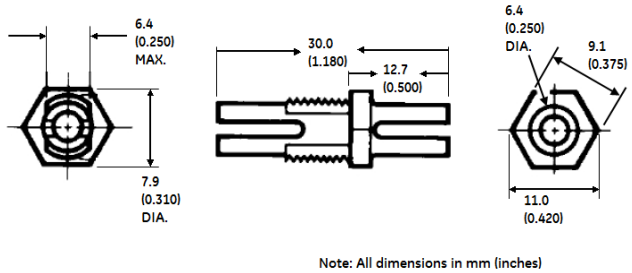

Figure 30: Single bulkhead connector dimensions

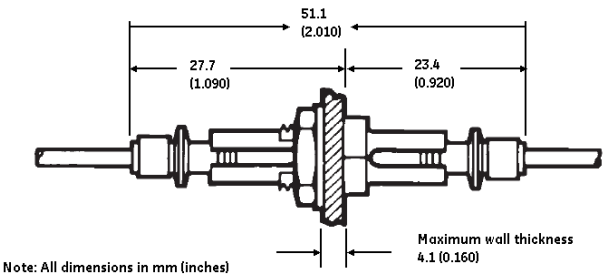

Figure 31: Single bulkhead connector with single connectors and sensor fiber

Before installing the AF sensor units, ensure that all other drilling and installation is complete to minimize possible damage to the sensitive unit and connected sensor fiber cable.

> *Note:*
> *Sensor fiber should be held in place loosely for the best long-term performance. Avoid over-tightening ties which may deform or break the sensor fiber.*

> *Note:*
> *The loop sensor fiber can be connected directly to the 8 Series relay without a sensor fiber extension, however, care must be taken to ensure correct alignment of the loop sensor single connectors into the relay light sensor input.*

Installing the loop sensor fiber without an extension

1. Plan the path of the loop sensor fiber, looping through the chamber or chambers requiring arc flash detection.
2. Ensure that both ends of the loop remain close together and can reach the 8 Series relay light sensor inputs.
3. Install the loop sensor carefully, following all sensor fiber handling guidelines.
4. Plug the single connectors into the back of the 8 Series relay.

Installing the loop sensor fiber with a sensor fiber extension

1. Plan the path of the loop sensor fiber, looping through the chamber or chambers requiring arc flash detection.
2. Ensure that both ends of the loop remain close enough together to be reached by the sensor fiber extension. If needed, gently pull apart the duplex sensor fiber extension from the end with two single connectors, being careful not to bend the fiber with a radius of less than 35 mm (1.3 inches).
3. Ensure that the sensor fiber extension is long enough to reach the 8 Series relay from the bulkhead connector location.
4. Mount the bulkhead connector on the side of the chamber, following the drill hole dimensions provided. Note that the single bulkhead connector uses washers 11.0 mm (0.420 in) wide, so the drill holes must be spaced accordingly if the loop sensor path begins and ends in the same place.

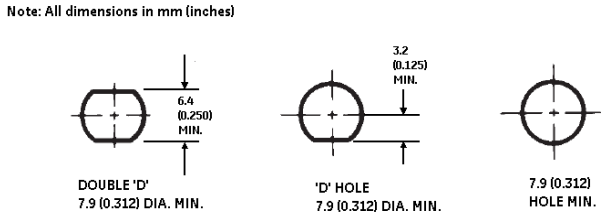

Figure 32: Bulkhead connector cutout

5. Install the loop sensor carefully, following all sensor fiber handling guidelines.
6. Plug the ends of the loop sensor into the bulkhead connectors.
7. Plug the single connectors on the sensor fiber extension into the other sides of the bulkhead connectors, and the duplex connector into the back of the 8 Series relay.

2.11 PHYSICAL CONSIDERATIONS OF WIRING

When installing two lugs on one terminal, both lugs must be oriented as shown in the picture below. This is to ensure the adjacent lower terminal block does not interfere with the lug body.

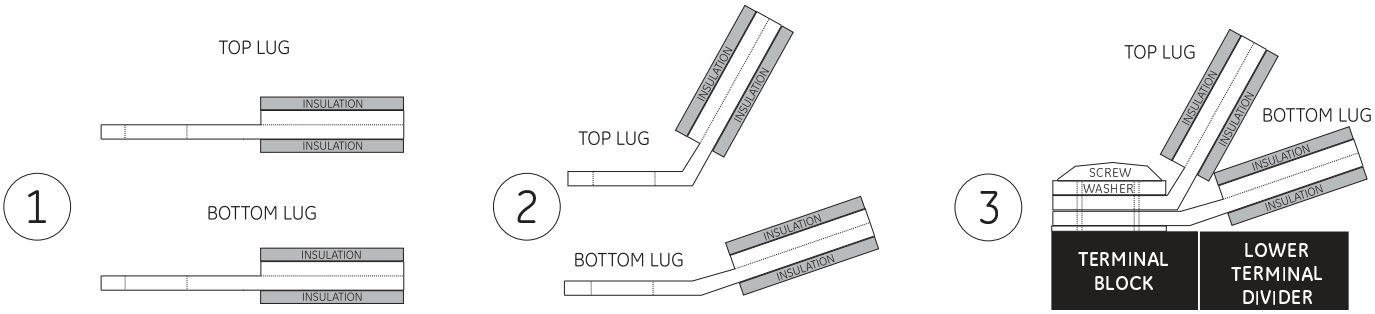

Figure 33: Positioning the lugs correctly

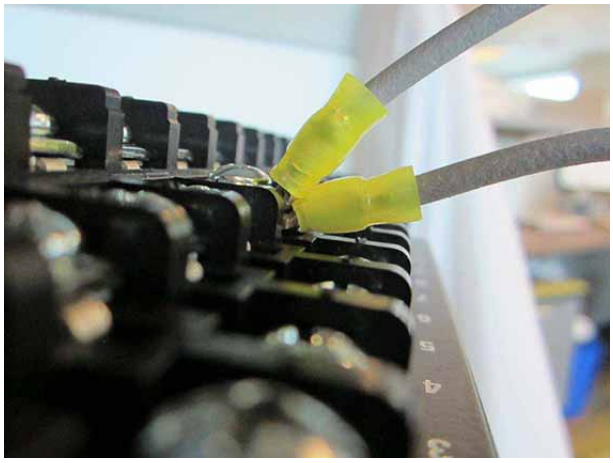

Figure 34: Correct Installation Method

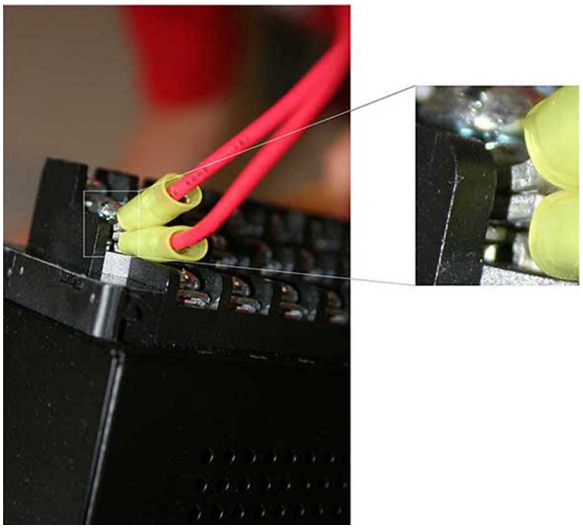

Figure 35: INCORRECT INSTALLATION METHOD (lower lug reversed)

2.11.1 TERMINAL STRIP TYPES

There are two types of removable terminal strips as shown: right-angle plugs with side screw connections, and straight plugs with front screw connections.

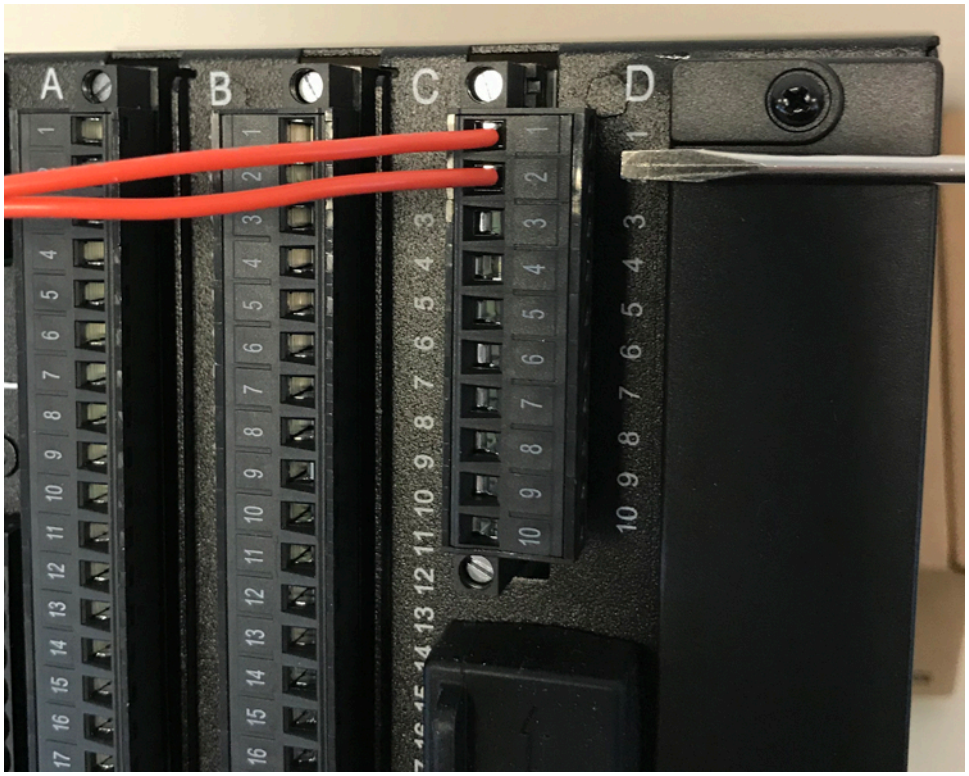

Figure 36: Right-angle plugs with side screw connections

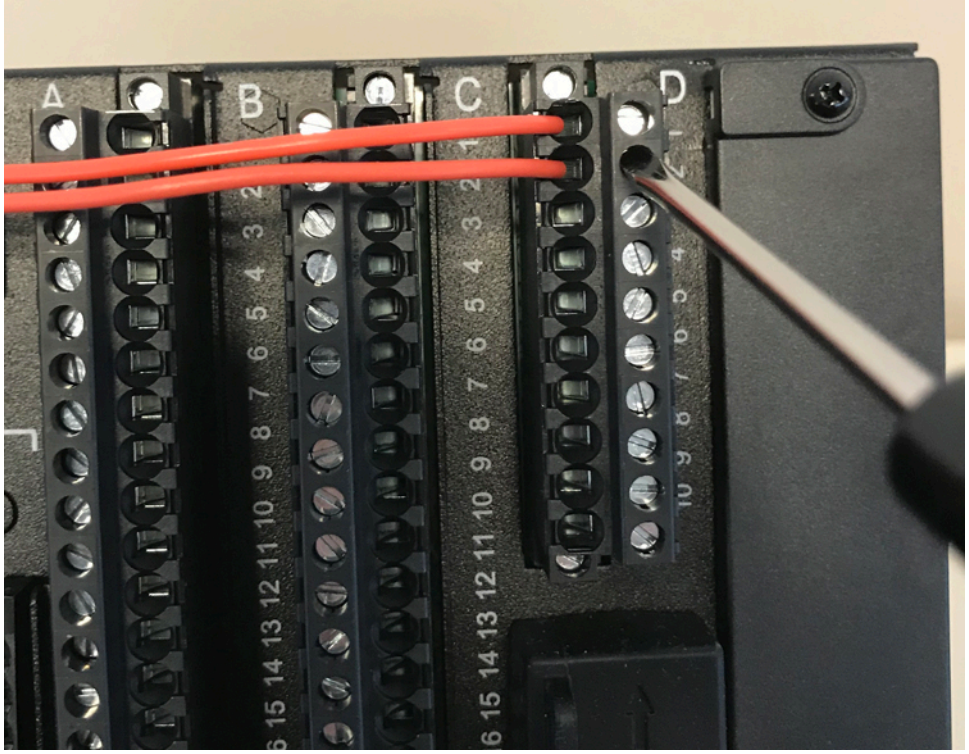

Figure 37: Straight plugs with front screw connections

2.11.2 WIRE SIZE

Use the following guideline for wiring to terminal strips A, B, C, D, F, G, H:

- 12 AWG to 24 AWG
- Suggested wiring screw tightening torque: 4.5 in-lbs (0.5 N-m)
- Usage of ferrules or pin terminals is recommended
- Suggested wire stripping / pin contact length:
  - Right-angle connection type plug: 7 to 8 mm
  - Front connection type plug: 12 mm

Use the following guideline for wiring to terminal blocks J, K:

- 12 AWG to 22 AWG (3.3 mm^2 to 0.3 mm^2): Single wire termination with/without 9.53 mm (0.375”) maximum diameter ring terminals.
- 14 AWG to 22 AWG (2.1 mm^2 to 0.3 mm^2): Multiple wire termination with 9.53 mm (0.375”) maximum diameter ring terminals. Two ring terminals maximum per circuit.
- Suggested wiring screw tightening torque: 15 in-lb (1.7 N-m)
- Suggested mounting screw tightening torque (to attach terminal block to chassis): 8 in-lb (0.9 N-m)

2.12 TERMINAL CONNECTIONS

All the terminal strips are labeled with a slot letter to identify the module slot position and numbers to identify the terminals within the module.

> *Note:*
> *Make sure that the first letter on the terminal strip corresponds to the slot location identified on the chassis silkscreen.*

Due to the possible number of applications, it is not possible to present typical connections for all possible schemes. The information in this section covers the main aspects of interconnectivity, in the general areas of inputs, outputs, communications and grounding. The figure below shows the rear terminal layout of the 8 Series platform.

2.12.1 GENERAL CONNECTIONS

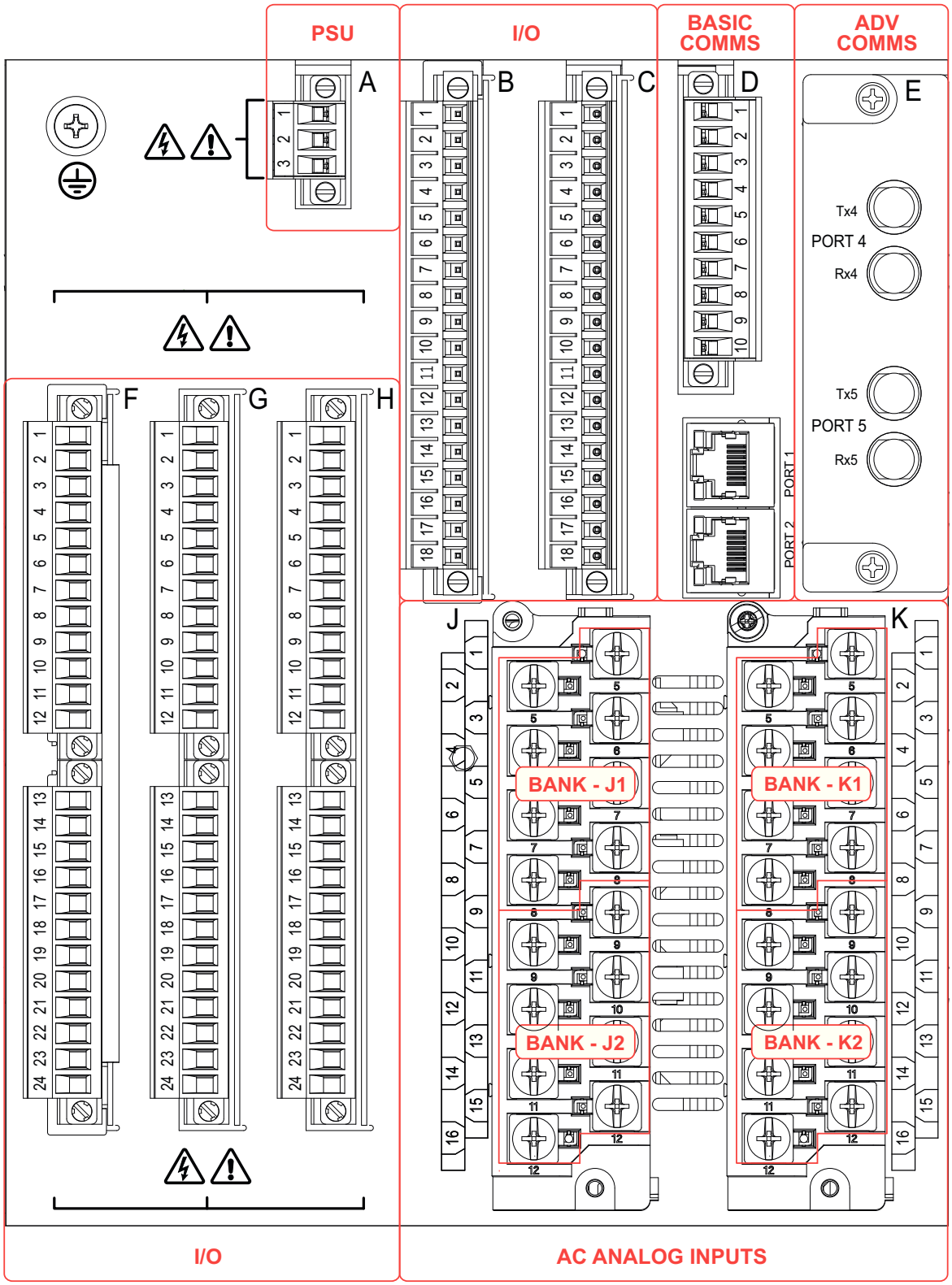

Figure 38: Rear Terminal Layout of the Platform

Power Supply

H - HV Power Supply		L - LV Power Supply	
Terminal	**Description**	**Terminal**	**Description (DC Voltage input polarity)**
1	Line	1	+ve (positive)
2	Neutral	2	-ve (negative)
3	Ground	3	Ground

Communications

Terminals	Order Code : SE-N	Order Code : SE-T	Order Code: 1E/1P/2A/2E/3E/3A - S/C	Order Code : 1E/1P/3E/3A -T	Order Code : 4E - S/C
1	IRIG-B (+)	IRIG-B (+)	IRIG-B (+)	IRIG-B (+)	IRIG-B (+)
2	IRIG-B (-)	IRIG-B (-)	IRIG-B (-)	IRIG-B (-)	IRIG-B (-)
3	RS485_1 (+)	RS485_1 (+)/ RS422_Rx(+)	RS485_1 (+)	RS485_1 (+)	RS485_1 (+)/ RS422_Rx(+)
4	RS485_1 (-)	RS485_1 (-)/ RS422_Rx(-)	RS485_1 (-)	RS485_1 (-)	RS485_1 (-)/ RS422_Rx(-)
5	RS485_1 COM	RS485_1 COM	RS485_1 COM	RS485_1 COM	RS485_1 COM
6	RESERVED	RS422_Tx(+)	RESERVED	RS422_Tx(+)	RS422_Tx(+)
7	RESERVED	RS422_Tx(-)	RESERVED	RS422_Tx(-)	RS422_Tx(-)
8	RMIO shield	COM/shield	RMIO shield	COM/shield	COM/shield
9	RMIO +	RS485_2(+)/RMIO +	RMIO +	RS485_2(+)/RMIO +	RS485_2(+)/RMIO +
10	RMIO -	RS485_2(-)/RMIO -	RMIO -	RS485_2(-)/RMIO -	RS485_2(-)/RMIO -
RJ45 - P1	ETHERNET	ETHERNET	NOT USED	ETHERNET	ETHERNET
RJ45 - P2	NOT USED	ETHERNET	NOT USED	ETHERNET	ETHERNET
RJ45 - P4	N/A	N/A	ETHERNET	N/A	ETHERNET
RJ45 - P5	N/A	N/A	ETHERNET	N/A	ETHERNET

2.13 TERMINAL IDENTIFICATION

Optional I/O Card A, slot F, G, or H

F/G/H1		NO	TRIP	OUTPUT RELAYS
F/G/H2		COMMON		
F/G/H3		OPT/V		
F/G/H4		NO	CLOSE /AUX	
F/G/H5		COMMON		
F/G/H6		OPT/V		
F/G/H7		NC	AUX	
F/G/H8		COMMON		
F/G/H9		NO		
F/G/H10		NC	AUX	
F/G/H11		COMMON		
F/G/H12		NO		
F/G/H13	+	DIGITAL INPUT 1	THRESHOLD SETTING GROUP 1	DIGITAL INPUTS
F/G/H14	+	DIGITAL INPUT 2		
F/G/H15	+	DIGITAL INPUT 3		
F/G/H16	+	DIGITAL INPUT 4		
F/G/H17	+	DIGITAL INPUT 5		
F/G/H18	+	DIGITAL INPUT 6		
F/G/H19	+	DIGITAL INPUT 7		
F/G/H20	–	COMMON		
F/G/H21	+	DC +24V		
F/G/H22		NC	AUX*	
F/G/H23		COMMON		
F/G/H24		NO		

Optional I/O Card M, slot F, G, or H

F/G/H1		COMMON	HSHB 1 (with Vmon)	OUTPUT RELAYS
F/G/H2		NO		
F/G/H3		RESERVED		
F/G/H4		COMMON	HSHB 2 (with Vmon)	
F/G/H5		NO		
F/G/H6		RESERVED		
F/G/H7		COMMON	HSHB 3 (w/o Vmon)	
F/G/H8		NO		
F/G/H9		RESERVED		
F/G/H10		COMMON	HSHB 4 (w/o Vmon)	
F/G/H11		NO		
F/G/H12		RESERVED		
F/G/H13	+	DIGITAL INPUT 1	THRESHOLD SETTING GROUP 1	DIGITAL INPUTS
F/G/H14	+	DIGITAL INPUT 2		
F/G/H15	+	DIGITAL INPUT 3		
F/G/H16	+	DIGITAL INPUT 4		
F/G/H17	+	DIGITAL INPUT 5		
F/G/H18	+	DIGITAL INPUT 6		
F/G/H19	+	DIGITAL INPUT 7		
F/G/H20	–	COMMON		
F/G/H21	+	DC +24V		
F/G/H22		NC	FORM C CFR*	
F/G/H23		COM		
F/G/H24		NO		

Optional I/O Card L, slot G

G1	+	ANALOG OUTPUT 1	ANALOG OUTPUTS
G2	+	ANALOG OUTPUT 2	
G3	+	ANALOG OUTPUT 3	
G4	+	ANALOG OUTPUT 4	
G5	+	ANALOG OUTPUT 5	
G6	+	ANALOG OUTPUT 6	
G7	+	ANALOG OUTPUT 7	
G8	–	RETURN	
G9	–	SHIELD	
G10	+	ANALOG INPUT 1	ANALOG INPUTS
G11	+	ANALOG INPUT 2	
G12	+	ANALOG INPUT 3	
G13	+	ANALOG INPUT 4	
G14	–	RETURN	
G15	–	SHIELD	
G16		RESERVED	
G17		RESERVED	
G18		RESERVED	
G19	+	HOT	RTD
G20	+	COMP	
G21	–	RETURN	
G22	–	SHIELD	
G23		RESERVED	
G24		RESERVED	

Optional I/O Card R or S, slot B or C**

B1/C1		HOT	RTD 1
B2/C2		COMP	
B3/C3		RETURN	RTD 1/2
B4/C4		HOT	RTD 2
B5/C5		COMP	
B6/C6		HOT	RTD 3
B7/C7		COMP	
B8/C8		RETURN	RTD 3/4
B9/C9		SHIELD	
B10/C10		HOT	RTD 4
B11/C11		COMP	
B12/C12		HOT	RTD 5
B13/C13		COMP	
B14/C14		RETURN	RTD 5/6
B15/C15		HOT	RTD 6
B16/C16		COMP	
B17/C17		SHIELD	
B18/C18		RESERVED	

Optional I/O Card F, slot H

H1	+	DIGITAL INPUT 1	DIGITAL INPUTS
H2	+	DIGITAL INPUT 2	
H3	+	DIGITAL INPUT 3	
H4	+	DIGITAL INPUT 4	
H5	+	DIGITAL INPUT 5	
H6	+	DIGITAL INPUT 6	
H7	+	DIGITAL INPUT 7	
H8	+	DIGITAL INPUT 8	
H9	+	DIGITAL INPUT 9	
H10	+	DIGITAL INPUT 10	
H11	–	COMMON	
H12	+	+24 V	

CH1		FIBER INPUT 1	ARC FLASH
CH2		FIBER INPUT 2	
CH3		FIBER INPUT 3	
CH4		FIBER INPUT 4	

894213B1.cdr

NOTES:
- Digital Input/Output numbering is sequential starting with Slot F
- RTD numbering is sequential starting with Slot B
- HSHB Output does not have polarity requirements for functionality

* This output is the Critical Fail Relay (CFR) when used in Slot F only

** Card S also supports 10 Ohm Copper RTD

Figure 39: Optional I/O card terminal mappings

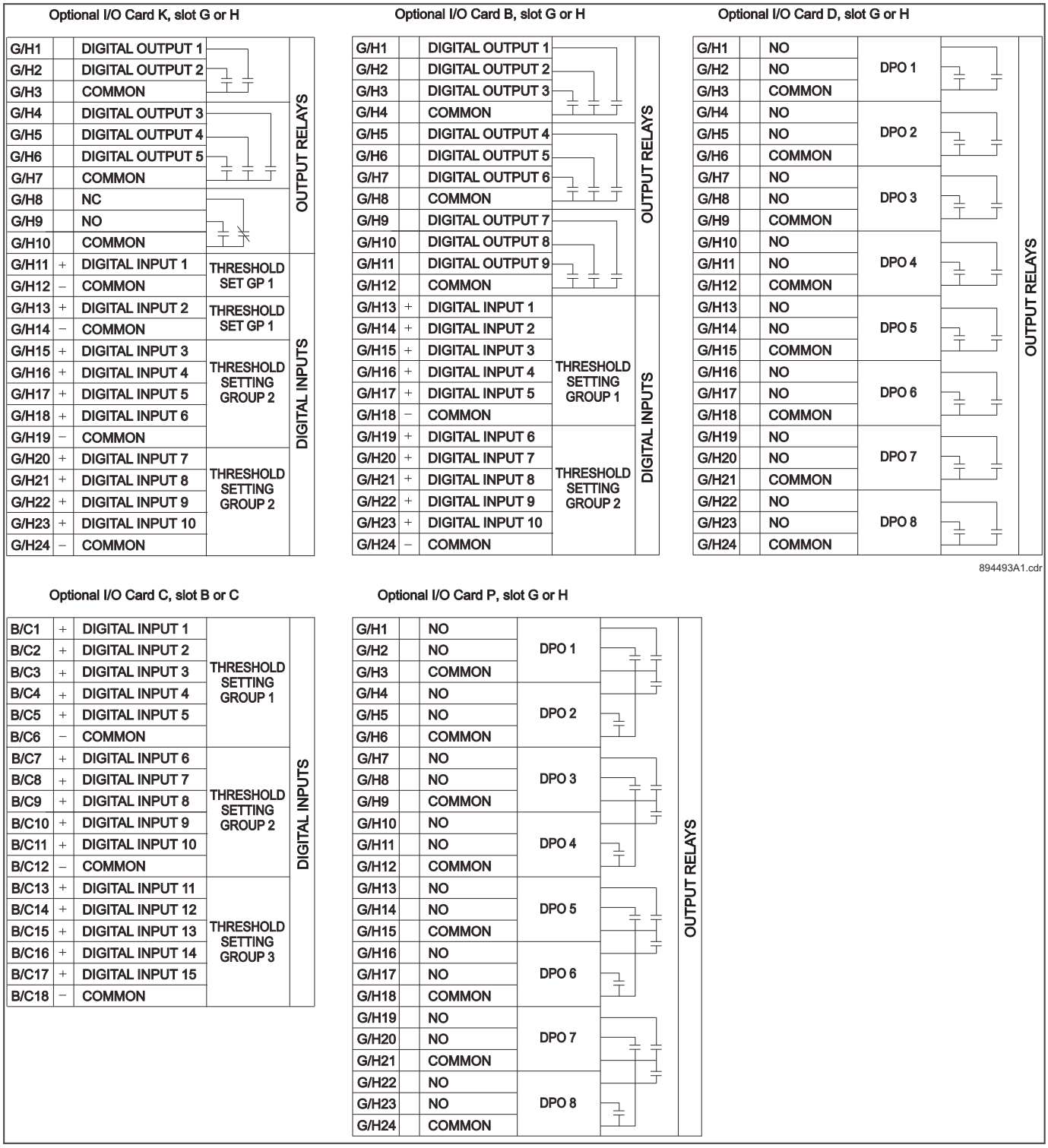

Figure 40: Optional I/O card terminal mappings cont.

AC Analog

AC Inputs - 1 X 3-Phase 1/5A CT, 4 VT 850-E Slot J (P1/P5), 850-D Slot J/K (P1/P5), 850-P Slot J (P1/P5)			AC Inputs - 1 X 1/5A CT 850-E Slot K (NN), 850-D Slot K (NN)	
Terminal	**Description**		**Terminal**	**Description**
1	CT1 PhA		1	RESERVED

AC Inputs - 1 X 3-Phase 1/5A CT, 4 VT 850-E Slot J (P1/P5), 850-D Slot J/K (P1/P5), 850-P Slot J (P1/P5)			AC Inputs - 1 X 1/5A CT 850-E Slot K (NN), 850-D Slot K (NN)	
Terminal	**Description**		**Terminal**	**Description**
2	CT1 PhA RETURN		2	RESERVED
3	CT1 PhB		3	RESERVED
4	CT1 PhB RETURN		4	RESERVED
5	CT1 PhC		5	RESERVED
6	CT1 PhC RETURN		6	RESERVED
7	CT1 N/G or CT Isg (850-D only)		7	CT2_IN or CT Isg
8	CT1 N/G RETURN or CT Isg RETURN (850-D only)		8	CT2_RETURN or CT Isg RETURN
9	VT1A IN		9	RESERVED
10	VT1A RETURN		10	RESERVED
11	VT1B IN		11	RESERVED
12	VT1B RETURN		12	RESERVED
13	VT1C IN		13	RESERVED
14	VT1C RETURN		14	RESERVED
15	VT1N IN		15	RESERVED
16	VT1N RETURN		16	RESERVED

AC Inputs - 1 X 3-Phase 1/5A CT, 2 LEA 850-P Slot J (L1/L5)			AC Inputs - 8 X 1/5A CT 850-P Slot K (R1/R5)	
Terminal	**Description**		**Terminal**	**Description**
1	CT1 PhA IN		1	CT2 PhA IN
2	CT1 PhA RETURN		2	CT2 PhA RETURN
3	CT1 PhB IN		3	CT2 PhB IN
4	CT1 PhB RETURN		4	CT2 PhB RETURN
5	CT1 PhC IN		5	CT2 PhC IN
6	CT1 PhC RETURN		6	CT2 PhC RETURN
7	CT1 N/G IN		7	CT2 N/G IN
8	CT1 N/G RETURN		8	CT2 N/G RETURN
9	LEA 1A		9	CT3 PhA IN
10	LEA 1B		10	CT3 PhA RETURN
11	LEA 1C		11	CT3 PhB IN
12	LEA 1N		12	CT3 PhB RETURN
13	LEA 2A		13	CT3 PhC IN
14	LEA 2B		14	CT3 PhC RETURN
15	LEA 2C		15	CT3 N/G IN
16	LEA 2N		16	CT3 N/G RETURN

2.14 RMIO MODULE INSTALLATION

The optional remote module (RMIO) is designed to be mounted near the load to be monitored. This eliminates the need for multiple RTD cables to run back from the installation, which may be in a remote location, to the switchgear.

Although the RMIO is internally shielded to minimize noise pickup and interference, it should be mounted away from high current conductors or sources of strong magnetic fields.

Figure 41: RMIO unit showing 2 IO_G modules

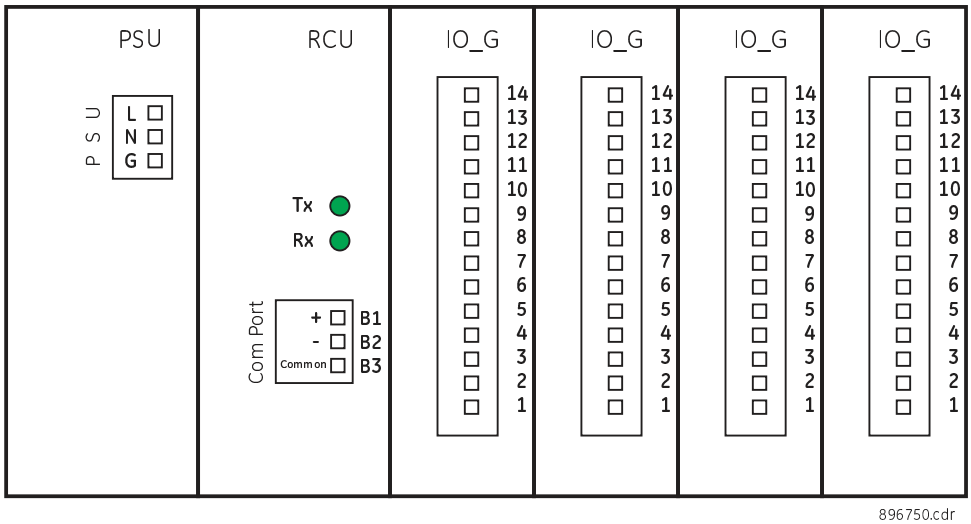

Figure 42: RMIO terminal identification with 4 IO_G modules

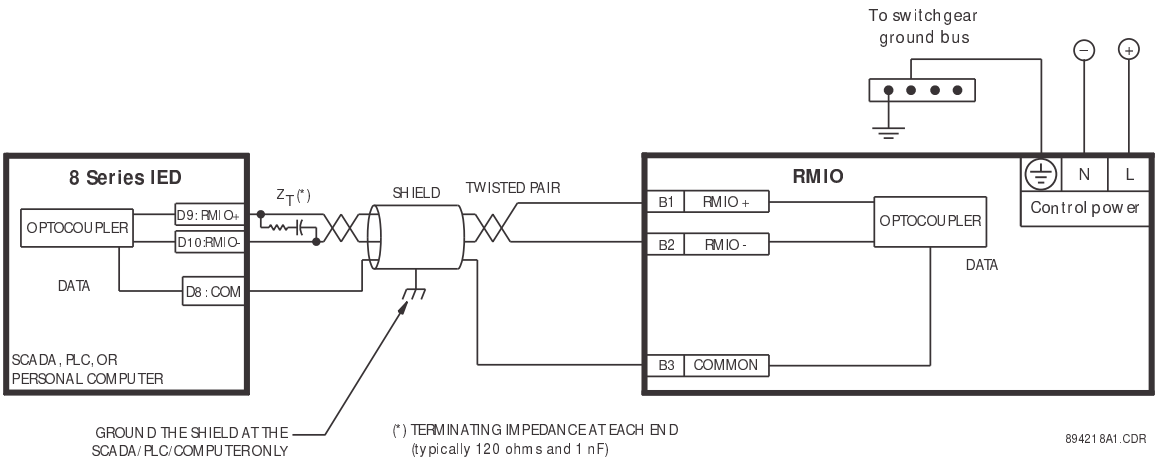

Figure 43: RMIO wiring diagram

2.15 PHASE SEQUENCE AND TRANSFORMER POLARITY

For correct operation of the relay features, follow the instrument transformer polarities, shown in the wiring diagrams. Note the solid square markings that are shown with all instrument transformer connections. When the connections adhere to the drawing, the arrow shows the direction of power flow for positive watts and the positive direction of lagging vars. The phase sequence is user programmable for either ABC or ACB rotation.

Depending on order code, the relay can have up to four (4) current inputs in each J slot and K slot. Three of them are used for connecting to the phase CT phases A, B, and C. The fourth input is a ground input that can be connected to either a ground CT placed on the neutral from a Wye connected transformer winding, or to a donut type CT measuring the zero sequence current from a grounded system. The relay CTs are placed in a packet mounted to the chassis of the relay. There are no internal ground connections on the current inputs. Current transformers with 1 to 12000 A primaries may be used.

Caution:
Verify that the relay's nominal input current of 1 A or 5 A matches the secondary rating of the connected CTs. Unmatched CTs may result in equipment damage or inadequate protection.

Caution:
IMPORTANT: The phase and ground current inputs correctly measure up to 46 times the current input's nominal rating. Time overcurrent curves become horizontal lines for currents above 20 × PKP.

2.16 GROUND AND SENSITIVE GROUND CT INPUTS

There are three dedicated ground inputs referred to throughout this manual as the Ground Current (1A/5A secondary), Sensitive Ground Current (1A/5A secondary) and the Sensitive Ground (50:0.025) inputs.

Before making ground connections, be aware that the relay automatically calculates the neutral (residual) current from the sum of the three phase current phasors. The following figures show three possible ground connections using the ground current input (Terminals J7 and J8) and three possible sensitive ground connections using the sensitive ground current input (Terminals K7 and K8).

The ground input (Terminals J7 and J8) is used in conjunction with a Zero Sequence CT as source, or in the neutral of wye-connected source CTs. The ground current input can be used to polarize both the neutral and sensitive ground directional elements. When using the residual connection, set the ***GROUND CT PRIMARY*** setpoint to a value equal to the ***PHASE CT PRIMARY*** setpoint. The sensitive ground current input is intended for use either with a CT in a source neutral of a high-impedance grounded system, or on ungrounded systems. On ungrounded systems it is connected residually with the phase current inputs. In this case, the ***SENSTV GND CT PRIMARY*** setpoint should be programmed to a value equal to the ***PHASE CT PRIMARY*** setpoint. The sensitive ground current input can be connected to a Zero Sequence CT for increased sensitivity and accuracy when physically possible in the system

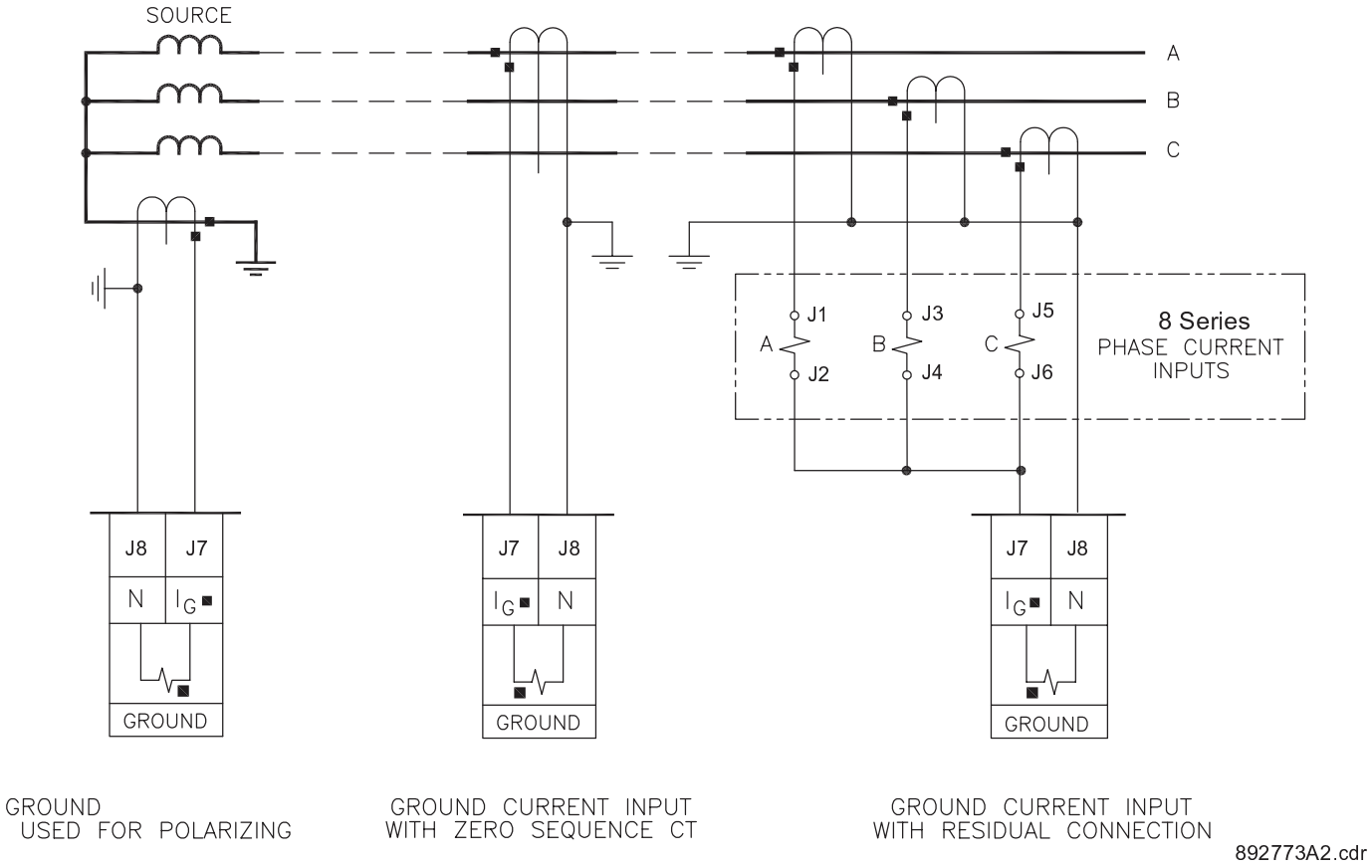

Figure 44: Ground inputs

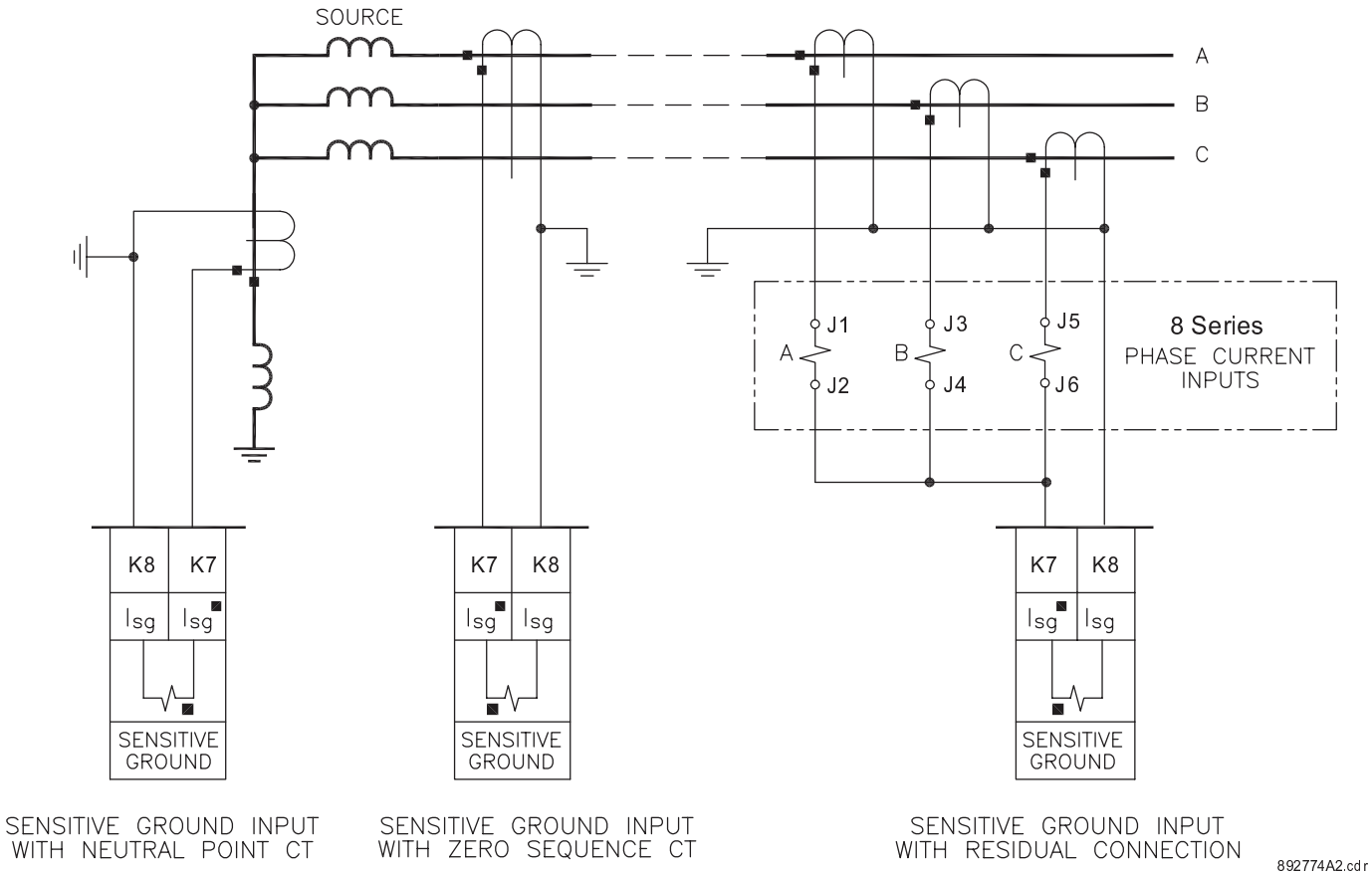

Figure 45: Sensitive Ground Inputs

2.17 ZERO-SEQUENCE CT INSTALLATION

The figure below shows the various CT connections and the exact placement of a Zero Sequence current CT, so that ground fault current can be detected. Twisted pair cabling on the Zero Sequence CT is recommended.

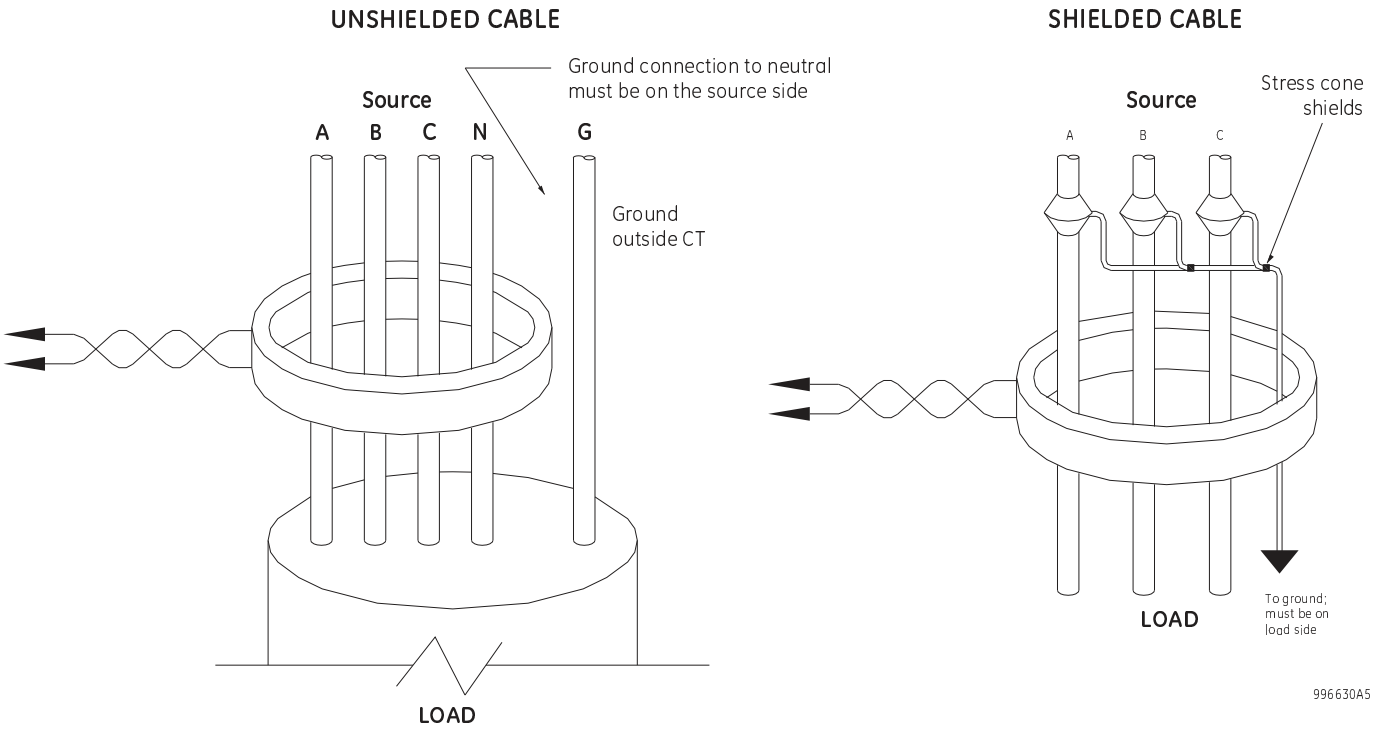

Figure 46: Zero Sequence (Core Balance) CT Installation

2.18 VOLTAGE INPUTS

The relays have four channels for AC voltage inputs, each with an isolating transformer in each J and K slot. Voltage transformers up to a maximum 5000:1 ratio may be used. The nominal secondary voltage must be in the 10 to 240 V range.

The Bus VT connections most commonly used, wye and delta (or open delta), are shown in the typical wiring diagram. The single Auxiliary voltage input is commonly used as the line voltage. For LEA inputs, the line voltage connection is line to neutral voltages. The line VT input channel, used for the synchrocheck feature, can be connected for phase-neutral voltages V_{an}, V_{bn}, or V_{cn}; or for phase-phase voltages V_{ab}, V_{bc}, or V_{ca} as shown.

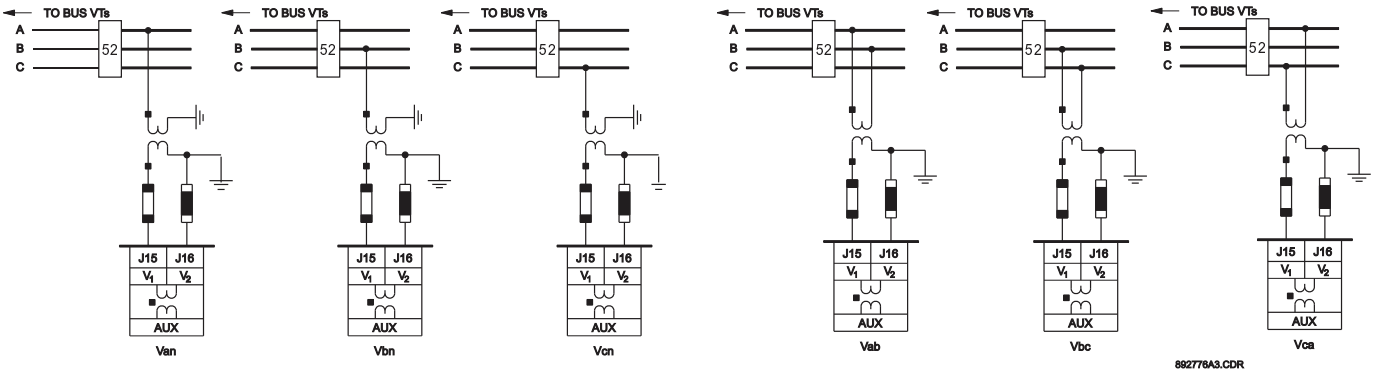

Figure 47: Line VT Connections

Caution:
If Delta VTs are used for three-phase voltages, the zero sequence voltage (V0) and neutral ground polarizing voltage (–V0) are zero. Also, with the Delta VT connection, the phase-neutral voltage cannot be measured and is not displayed.

2.19 RESTRICTED GROUND FAULT INPUTS

Restricted Ground Fault protection, (also referred to as Restricted Earth Fault protection), is often applied to transformers having grounded Wye windings to provide ground fault detection for faults near the transformer neutral. Each current bank on the relay has 3 phase current inputs and one ground input. Any of the available inputs on the relay current banks can be selected as a signal input for an RGF element.

The phase and ground input CT connections to the relay are shown below:

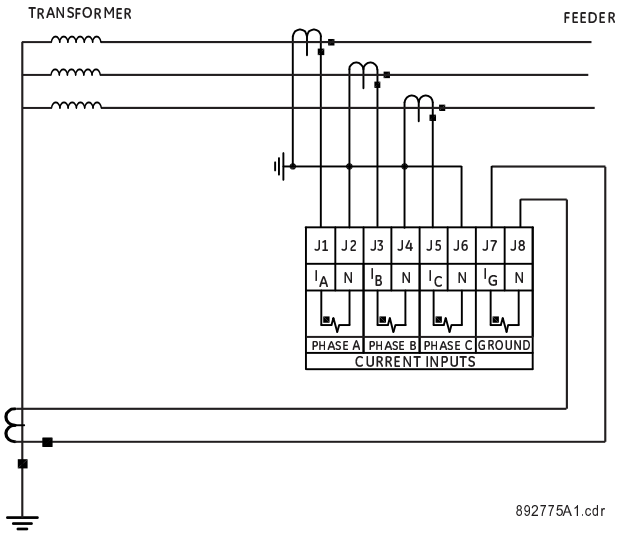

Figure 48: Restricted Ground Fault Inputs

2.20 CONTROL POWER

Control power is supplied to the relay such that it matches the relay's installed power supply range.

Caution:
Control power supplied to the relay must match the installed power supply range. If the applied voltage does not match, damage to the unit may occur. All grounds MUST be connected for normal operation regardless of control power supply type.

For more details, please refer to the power supply section.

Caution:
The relay should be connected directly to the ground bus, using the shortest practical path. A tinned copper, braided, shielding and bonding cable should be used. As a minimum, 96 strands of number 34 AWG should be used. Belden catalog number 8660 is suitable.

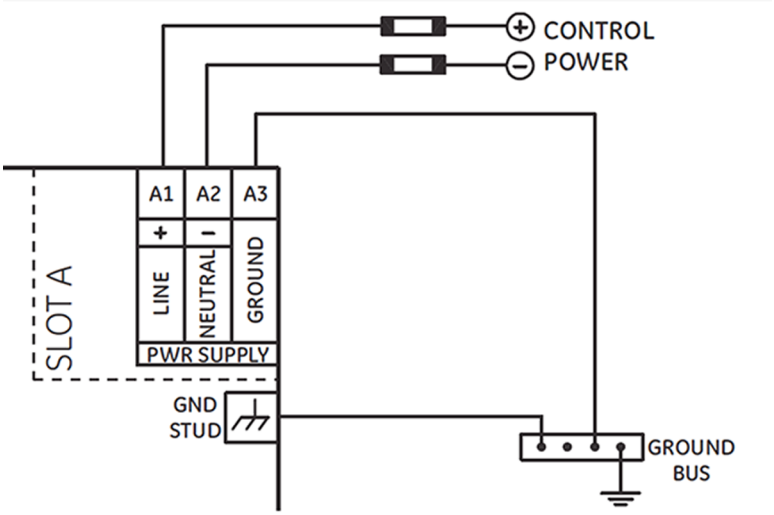

Figure 49: Control Power Connection

2.21 CONTACT INPUTS

Depending on the order code, the relay has a different number of contact inputs which can be used to operate a variety of logic functions for circuit switching device control, external trips, blocking of protection elements, etc. The relay has contact inputs and virtual inputs that are combined in a form of programmable logic to facilitate the implementation of various schemes.

The voltage threshold at which the contact inputs detect a closed contact input is programmable as 17 V DC for 24 V sources, 33 V DC for 48 V sources, 84 V DC for 110 to 125 V sources, and 166 V DC for 250 V sources.

Wet or Dry input signal types can be connected to contact input terminals as shown in the figure: Wet and Dry Contact Input Wiring Examples.

Dry inputs use an internal +24V supply. The voltage threshold must be set to 17V for the inputs to be recognized using the internal +24V.

Note:
The same type of input signal must be connected to all contact inputs on the same contact input card.

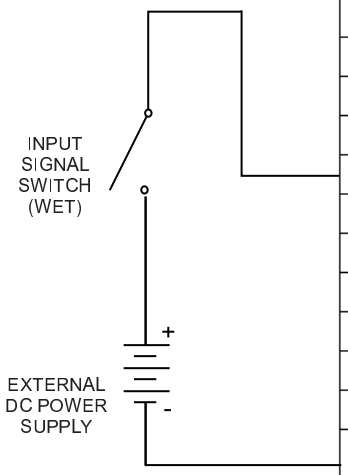

A - HV I/O - 2 FA (Vmon), 3FC, 7 Contact Inputs	
Terminal	**Description**
1	FA_1 COM
2	FA_1 NO
3	FA_1 OPT/V
4	FA_2 COM
5	FA_2 NO
6	FA_2 OPT/V
7	FC_1 NC
8	FC_1 COM
9	FC_1 NO
10	FC_2 NC
11	FC_2 COM
12	FC_2 NO
13	CONTACT IN_1
14	CONTACT IN_2
15	CONTACT IN_3
16	CONTACT IN_4
17	CONTACT IN_5
18	CONTACT IN_6
19	CONTACT IN_7
20	CONTACT IN COM
21	DC +24
22	FC_3 NC (CFR)
23	FC_3 COM (CFR)
24	FC_3 NO (CFR)

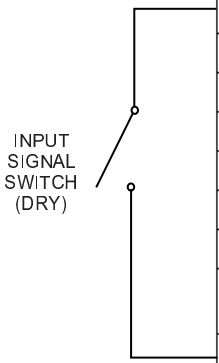

A - HV I/O - 2 FA (Vmon), 3FC, 7 Contact Inputs	
Terminal	**Description**
1	FA_1 COM
2	FA_1 NO
3	FA_1 OPT/V
4	FA_2 COM
5	FA_2 NO
6	FA_2 OPT/V
7	FC_1 NC
8	FC_1 COM
9	FC_1 NO
10	FC_2 NC
11	FC_2 COM
12	FC_2 NO
13	CONTACT IN_1
14	CONTACT IN_2
15	CONTACT IN_3
16	CONTACT IN_4
17	CONTACT IN_5
18	CONTACT IN_6
19	CONTACT IN_7
20	CONTACT IN COM
21	DC +24
22	FC_3 NC (CFR)
23	FC_3 COM (CFR)
24	FC_3 NO (CFR)

Figure 50: Wet and Dry Contact Input Wiring Examples

The locations of the output relays have a fixed assignment for the platform called the master identifier. I/O options that include inputs occupy the fixed assigned output locations so in these cases the relay assignment maps to the master identifier.

The critical failure output relay is reserved as Relay_8 and it is omitted and is not programmable.

Slots F, G, H Terminal Master Identifier					Slots F,G,H with I/O options A, A, A			
Terminal#	**SLOT F**	**SLOT G**	**SLOT H**		**Terminal#**	**SLOT F**	**SLOT G**	**SLOT H**
1	RELAY_1	RELAY_9	RELAY_17		1	RELAY_1	RELAY_9	RELAY_17
2	RELAY_1	RELAY_9	RELAY_17		2	RELAY_1	RELAY_9	RELAY_17
3	RELAY_1	RELAY_9	RELAY_17		3	RELAY_1	RELAY_9	RELAY_17
4	RELAY_2	RELAY_10	RELAY_18		4	RELAY_2	RELAY_10	RELAY_18
5	RELAY_2	RELAY_10	RELAY_18		5	RELAY_2	RELAY_10	RELAY_18
6	RELAY_2	RELAY_10	RELAY_18		6	RELAY_2	RELAY_10	RELAY_18

Slots F, G, H Terminal Master Identifier					Slots F,G,H with I/O options A, A, A			
Terminal#	SLOT F	SLOT G	SLOT H		Terminal#	SLOT F	SLOT G	SLOT H
7	RELAY_3	RELAY_11	RELAY_19		7	RELAY_3	RELAY_11	RELAY_19
8	RELAY_3	RELAY_11	RELAY_19		8	RELAY_3	RELAY_11	RELAY_19
9	RELAY_3	RELAY_11	RELAY_19		9	RELAY_3	RELAY_11	RELAY_19
10	RELAY_4	RELAY_12	RELAY_20		10	RELAY_4	RELAY_12	RELAY_20
11	RELAY_4	RELAY_12	RELAY_20		11	RELAY_4	RELAY_12	RELAY_20
12	RELAY_4	RELAY_12	RELAY_20		12	RELAY_4	RELAY_12	RELAY_20
13	RELAY_5	RELAY_13	RELAY_21		13	Digital In_1	Digital In_8	Digital In_15
14	RELAY_5	RELAY_13	RELAY_21		14	Digital In_2	Digital In_9	Digital In_16
15	RELAY_5	RELAY_13	RELAY_21		15	Digital In_3	Digital In_10	Digital In_17
16	RELAY_6	RELAY_14	RELAY_22		16	Digital In_4	Digital In_11	Digital In_18
17	RELAY_6	RELAY_14	RELAY_22		17	Digital In_5	Digital In_12	Digital In_19
18	RELAY_6	RELAY_14	RELAY_22		18	Digital In_6	Digital In_13	Digital In_20
19	RELAY_7	RELAY_15	RELAY_23		19	Digital In_7	Digital In_14	Digital In_21
20	RELAY_7	RELAY_15	RELAY_23		20	Common	Common	Common
21	RELAY_7	RELAY_15	RELAY_23		21	+24V	+24V	+24V
22	RELAY_8	RELAY_16	RELAY_24		22	RELAY_8	RELAY_16	RELAY_24
23	RELAY_8	RELAY_16	RELAY_24		23	RELAY_8	RELAY_16	RELAY_24
24	RELAY_8	RELAY_16	RELAY_24		24	RELAY_8	RELAY_16	RELAY_24

Slots F, G, H with I/O options M, L, F					Slots F,G,H with I/O options A, L, A			
Terminal #	SLOT F	SLOT G	SLOT H		Terminal #	SLOT F	SLOT G	SLOT H
1	RELAY_1	Analog Out_1	Digital In_8		1	RELAY_1	Analog Out_1	RELAY_9
2	RELAY_1	Analog Out_2	Digital In_9		2	RELAY_1	Analog Out_2	RELAY_9
3	Reserved	Analog Out_3	Digital In_10		3	RELAY_1	Analog Out_3	RELAY_9
4	RELAY_2	Analog Out_4	Digital In_11		4	RELAY_2	Analog Out_4	RELAY_10
5	RELAY_2	Analog Out_5	Digital In_12		5	RELAY_2	Analog Out_5	RELAY_10
6	Reserved	Analog Out_6	Digital In_13		6	RELAY_2	Analog Out_6	RELAY_10
7	RELAY_3	Analog Out_7	Digital In_14		7	RELAY_3	Analog Out_7	RELAY_11
8	RELAY_3	Return	Digital In_15		8	RELAY_3	Return	RELAY_11
9	Reserved	Shield	Digital In_16		9	RELAY_3	Shield	RELAY_11
10	RELAY_4	Analog In_1	Digital In_17		10	RELAY_4	Analog In_1	RELAY_12
11	RELAY_4	Analog In_2	Common		11	RELAY_4	Analog In_2	RELAY_12
12	Reserved	Analog In_3	+24V		12	RELAY_4	Analog In_3	RELAY_12

Slots F, G, H with I/O options M, L, F					Slots F,G,H with I/O options A, L, A			
Terminal #	SLOT F	SLOT G	SLOT H		Terminal #	SLOT F	SLOT G	SLOT H
13	Digital In_1	Analog In_4	ARC FLASH Sensor 1 Sensor 2 Sensor 3 Sensor 4		13	Digital In_1	Analog In_4	Digital In_8
14	Digital In_2	Return			14	Digital In_2	Return	Digital In_9
15	Digital In_3	Shield			15	Digital In_3	Shield	Digital In_10
16	Digital In_4	Reserved			16	Digital In_4	Reserved	Digital In_11
17	Digital In_5	Reserved			17	Digital In_5	Reserved	Digital In_12
18	Digital In_6	Reserved			18	Digital In_6	Reserved	Digital In_13
19	Digital In_7	RTD_Hot			19	Digital In_7	RTD_Hot	Digital In_14
20	Common	RTD_Comp			20	Common	RTD_Comp	Common
21	+24V	RTD_Return			21	+24V	RTD_Return	+24V
22	RELAY_8	Shield			22	RELAY_8	Shield	RELAY_16
23	RELAY_8	Reserved			23	RELAY_8	Reserved	RELAY_16
24	RELAY_8	Reserved			24	RELAY_8	Reserved	RELAY_16

Slots F,G,H with I/O options A, A, F					Slots F, G, H with I/O options A, N, F		
Terminal #	SLOT F	SLOT G	SLOT H		Terminal #	SLOT F	SLOT H
1	RELAY_1	RELAY_9	Digital In_15		1	RELAY_1	Digital In_8
2	RELAY_1	RELAY_9	Digital In_16		2	RELAY_1	Digital In_9
3	RELAY_1	RELAY_9	Digital In_17		3	RELAY_1	Digital In_10
4	RELAY_2	RELAY_10	Digital In_18		4	RELAY_2	Digital In_11
5	RELAY_2	RELAY_10	Digital In_19		5	RELAY_2	Digital In_12
6	RELAY_2	RELAY_10	Digital In_20		6	RELAY_2	Digital In_13
7	RELAY_3	RELAY_11	Digital In_21		7	RELAY_3	Digital In_14
8	RELAY_3	RELAY_11	Digital In_22		8	RELAY_3	Digital In_15
9	RELAY_3	RELAY_11	Digital In_23		9	RELAY_3	Digital In_16
10	RELAY_4	RELAY_12	Digital In_24		10	RELAY_4	Digital In_17
11	RELAY_4	RELAY_12	Common		11	RELAY_4	Common
12	RELAY_4	RELAY_12	+24V		12	RELAY_4	+24V

Slots F,G,H with I/O options A, A, F					Slots F, G, H with I/O options A, N, F		
Terminal #	SLOT F	SLOT G	SLOT H		Terminal #	SLOT F	SLOT H
13	Digital In_1	Digital In_8	ARC FLASH Sensor 1 Sensor 2 Sensor 3 Sensor 4		13	Digital In_1	ARC FLASH Sensor 1 Sensor 2 Sensor 3 Sensor 4
14	Digital In_2	Digital In_9			14	Digital In_2	
15	Digital In_3	Digital In_10			15	Digital In_3	
16	Digital In_4	Digital In_11			16	Digital In_4	
17	Digital In_5	Digital In_12			17	Digital In_5	
18	Digital In_6	Digital In_13			18	Digital In_6	
19	Digital In_7	Digital In_14			19	Digital In_7	
20	Common	Common			20	Common	
21	+24V	+24V			21	+24V	
22	RELAY_8	RELAY_16			22	RELAY_8	
23	RELAY_8	RELAY_16			23	RELAY_8	
24	RELAY_8	RELAY_16			24	RELAY_8	

Slots B, C with I/O options C, C				Slots F, G, H with I/O options M, K, B			
Terminal #	SLOT B	SLOT C		Terminal #	SLOT F	SLOT G	SLOT H
1	Digital In_28	Digital In_43		1	RELAY_1	RELAY_9	RELAY_1
2	Digital In_29	Digital In_44		2	RELAY_1	RELAY_10	RELAY_16
3	Digital In_30	Digital In_45		3	Reserved	Common	RELAY_17
4	Digital In_31	Digital In_46		4	RELAY_2	RELAY_11	Common
5	Digital In_32	Digital In_47		5	RELAY_2	RELAY_12	RELAY_18
6	Common	Common		6	Reserved	RELAY_13	RELAY_19
7	Digital In_33	Digital In_48		7	RELAY_3	Common	RELAY_20
8	Digital In_34	Digital In_49		8	RELAY_3	RELAY_14	Common
9	Digital In_35	Digital In_50		9	Reserved	RELAY_14	RELAY_21
10	Digital In_36	Digital In_51		10	RELAY_4	RELAY_14	RELAY_22
11	Digital In_37	Digital In_52		11	RELAY_4	Digital In_8	RELAY_23
12	Common	Common		12	Reserved	Common	Common
13	Digital In_38	Digital In_53		13	Digital In_1	Digital In_9	Digital In_18
14	Digital In_39	Digital In_54		14	Digital In_2	Common	Digital In_19
15	Digital In_40	Digital In_55		15	Digital In_3	Digital In_10	Digital In_20
16	Digital In_41	Digital In_56		16	Digital In_4	Digital In_11	Digital In_21
17	Digital In_42	Digital In_57		17	Digital In_5	Digital In_12	Digital In_22
18	Common	Common		18	Digital In_6	Digital In_13	Common

Slots B, C with I/O options C, C				Slots F, G, H with I/O options M, K, B			
Terminal #	SLOT B	SLOT C		Terminal #	SLOT F	SLOT G	SLOT H
				19	Digital In_7	Common	Digital In_23
				20	Common	Digital In_14	Digital In_24
				21	+24V	Digital In_15	Digital In_25
				22	RELAY_8	Digital In_16	Digital In_26
				23	RELAY_8	Digital In_17	Digital In_27
				24	RELAY_8	Common	Common

Slots F, G, H with I/O options A, A, D (or P)				
Terminal #	SLOT F	SLOT G	SLOT H (with D Card)	SLOT H (with P Card)
1	RELAY_1	RELAY_9	RELAY_17-1	RELAY_17-1
2	RELAY_1	RELAY_9	RELAY_17-2	RELAY_17-2
3	RELAY_1	RELAY_9	RELAY_17 Common	Relay 17-1/18-1 Common
4	RELAY_2	RELAY_10	RELAY_18-1	RELAY_18-1
5	RELAY_2	RELAY_10	RELAY_18-2	RELAY_18-2
6	RELAY_2	RELAY_10	RELAY_18 Common	Relay 17-2/18-2 Common
7	RELAY_3	RELAY_11	RELAY_19-1	RELAY_19-1
8	RELAY_3	RELAY_11	RELAY_19-2	RELAY_19-2
9	RELAY_3	RELAY_11	RELAY_19 Common	Relay 19-1/20-1 Common
10	RELAY_4	RELAY_12	RELAY_20-1	RELAY_20-1
11	RELAY_4	RELAY_12	RELAY_20-2	RELAY_20-2
12	RELAY_4	RELAY_12	RELAY_20 Common	Relay 19-2/20-2 Common
13	Digital In_1	Digital In_8	RELAY_21-1	RELAY_21-1
14	Digital In_2	Digital In_9	RELAY_21-2	RELAY_21-2
15	Digital In_3	Digital In_10	RELAY_21 Common	Relay 21-1/22-1 Common
16	Digital In_4	Digital In_11	RELAY_22-1	RELAY_22-1
17	Digital In_5	Digital In_12	RELAY_22-2	RELAY_22-2
18	Digital In_6	Digital In_13	RELAY_22 Common	Relay 21-2/22-2 Common
19	Digital In_7	Digital In_14	RELAY_23-1	RELAY_23-1
20	Common	Common	RELAY_23-2	RELAY_23-2
21	+24V	+24V	RELAY_23 Common	Relay 23-1/24-1 Common
22	RELAY_8	RELAY_16	RELAY_24-1	RELAY_24-1
23	RELAY_8	RELAY_16	RELAY_24-2	RELAY_24-2
24	RELAY_8	RELAY_16	RELAY_24 Common	Relay 23-2/24-2 Common

2.22 SERIAL COMMUNICATIONS

One two-wire RS485 port is provided. Up to thirty-two relays can be daisy-chained together on a communication channel without exceeding the driver capability. For larger systems, additional serial channels must be added. Commercially available repeaters can also be used to add more than 32 relays on a single channel. Suitable cable should have a characteristic impedance of 120 ohms and total wire length should not exceed 1,200 meters (4,000 ft).

Voltage differences between remote ends of the communication link are not uncommon. For this reason, surge protection devices are internally installed across all RS485 terminals. Internally, an isolated power supply with an opto-coupled data interface is used to prevent noise coupling.

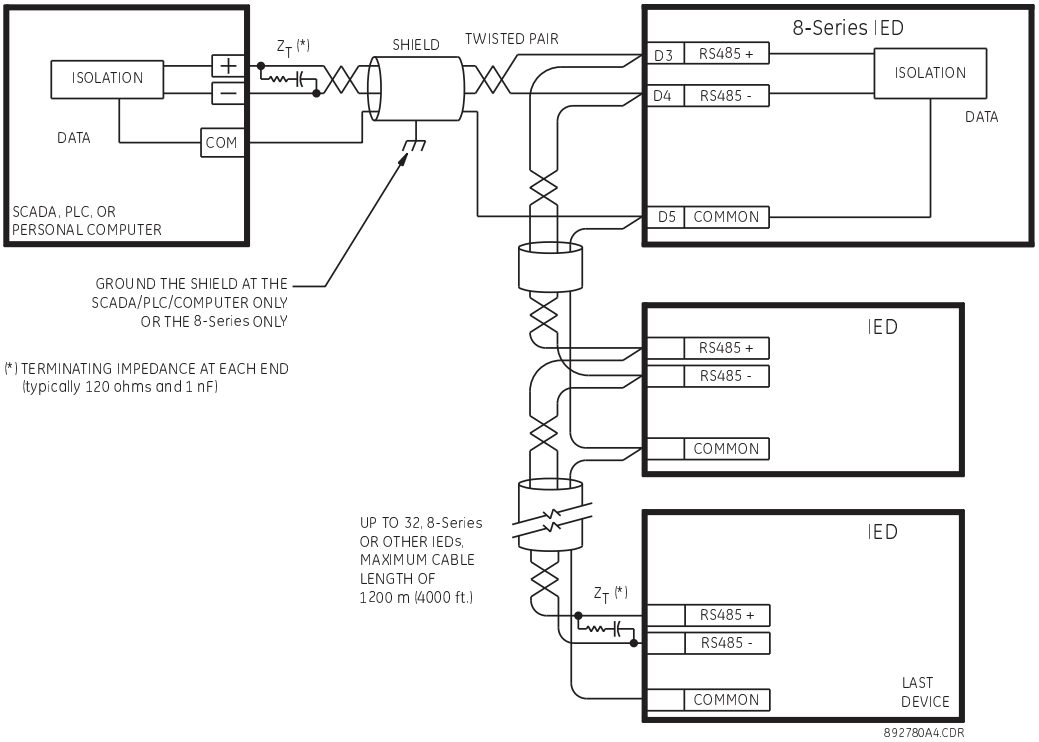

Figure 51: RS485 wiring diagram

Caution:
To ensure that all devices in a daisy-chain are at the same potential, it is imperative that the common terminals of each RS485 port are tied together and grounded at the master end. Failure to do so may result in intermittent or failed communications.

The source computer/PLC/SCADA system should have similar transient protection devices installed, either internally or externally. Ground the shield at one point only, as shown in the figure above, to avoid ground loops. Correct polarity is also essential. The relays must be wired with all the positive (+) terminals connected together and all the negative (–) terminals connected together. Each relay must be daisy-chained to the next one. Avoid star or stub connected configurations. The last device at each end of the daisy-chain should be terminated with a 120 ohm ¼ watt resistor in series with a 1 nF capacitor across the positive and negative terminals. Some systems allow the shield (drain wire) to be used as a common wire and to connect directly to the COM terminal; others function correctly only if the common wire is connected to the COM terminal, but insulated from the shield. Observing these guidelines ensure a reliable communication system immune to system transients.

2.23 IRIG-B

IRIG-B is a standard time code format that allows time stamping of events to be synchronized among connected devices within 1 millisecond. The IRIG-B time code formats are serial, width-modulated codes which can be either DC level shift or amplitude modulated (AM) form. The type of form is auto-detected by the relay. Third party equipment is available for generating the IRIG-B signal; this equipment may use a GPS satellite system to obtain the time reference so that devices at different geographic locations can also be synchronized.

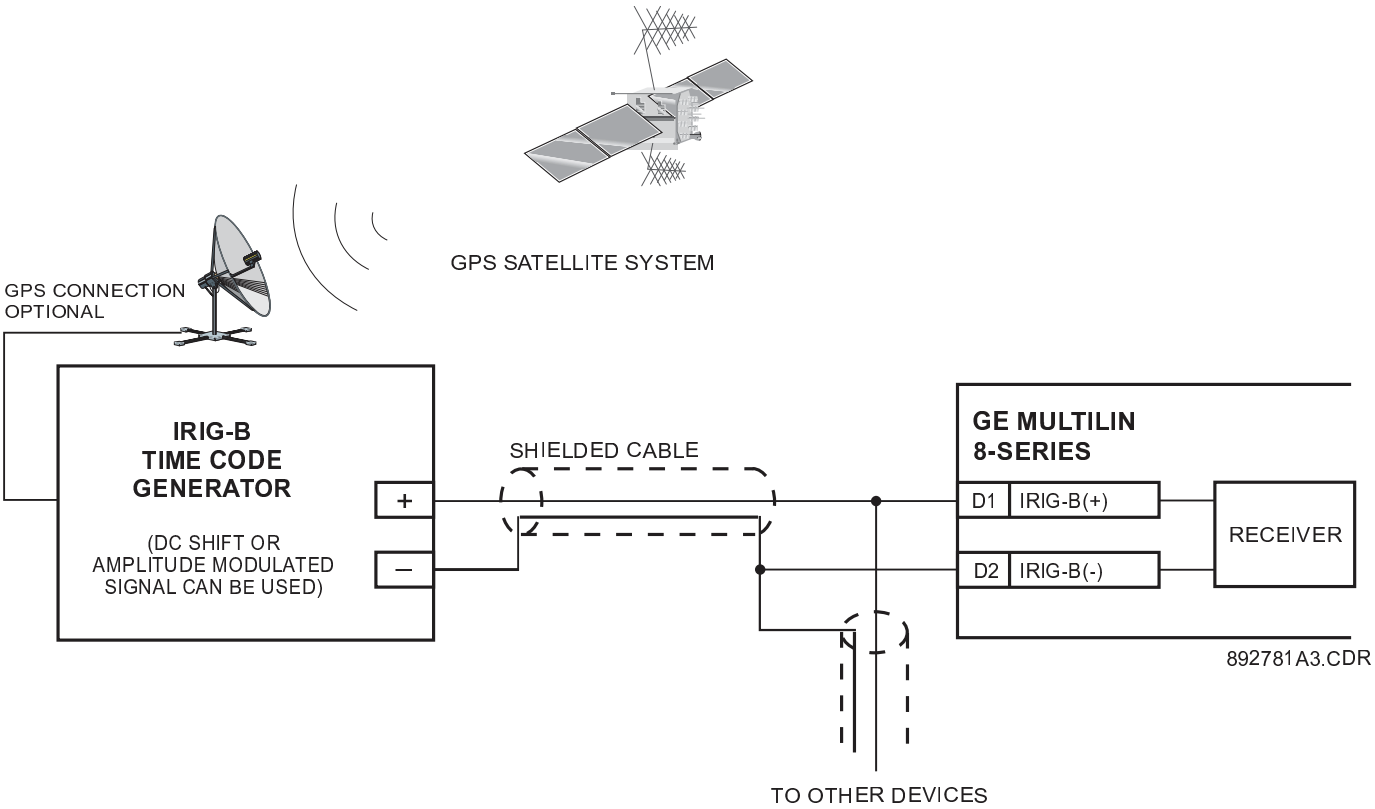

Figure 52: IRIG-B connection

2.24 TYPICAL WIRING DIAGRAM

The following illustrates the electrical wiring of the Draw out unit.

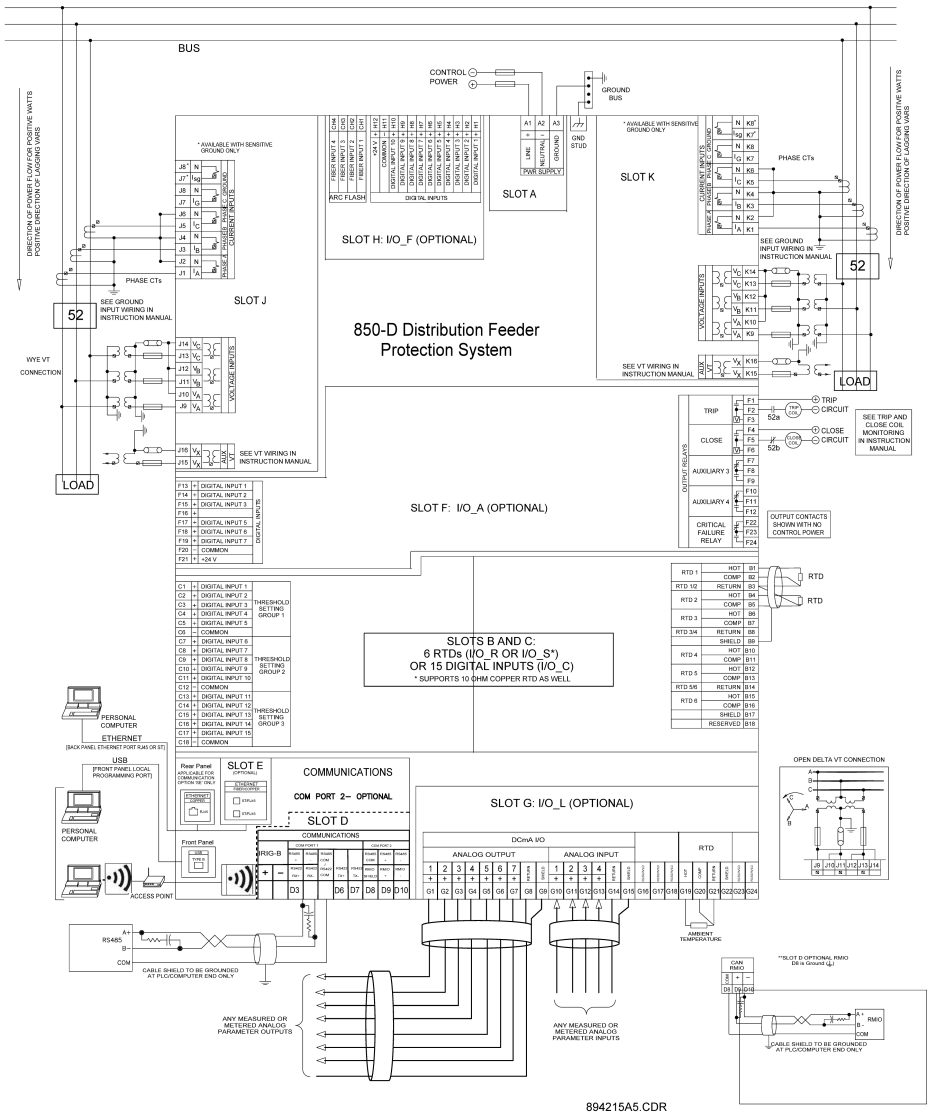

Figure 53: Typical wiring diagram – 850-D (894215A5)

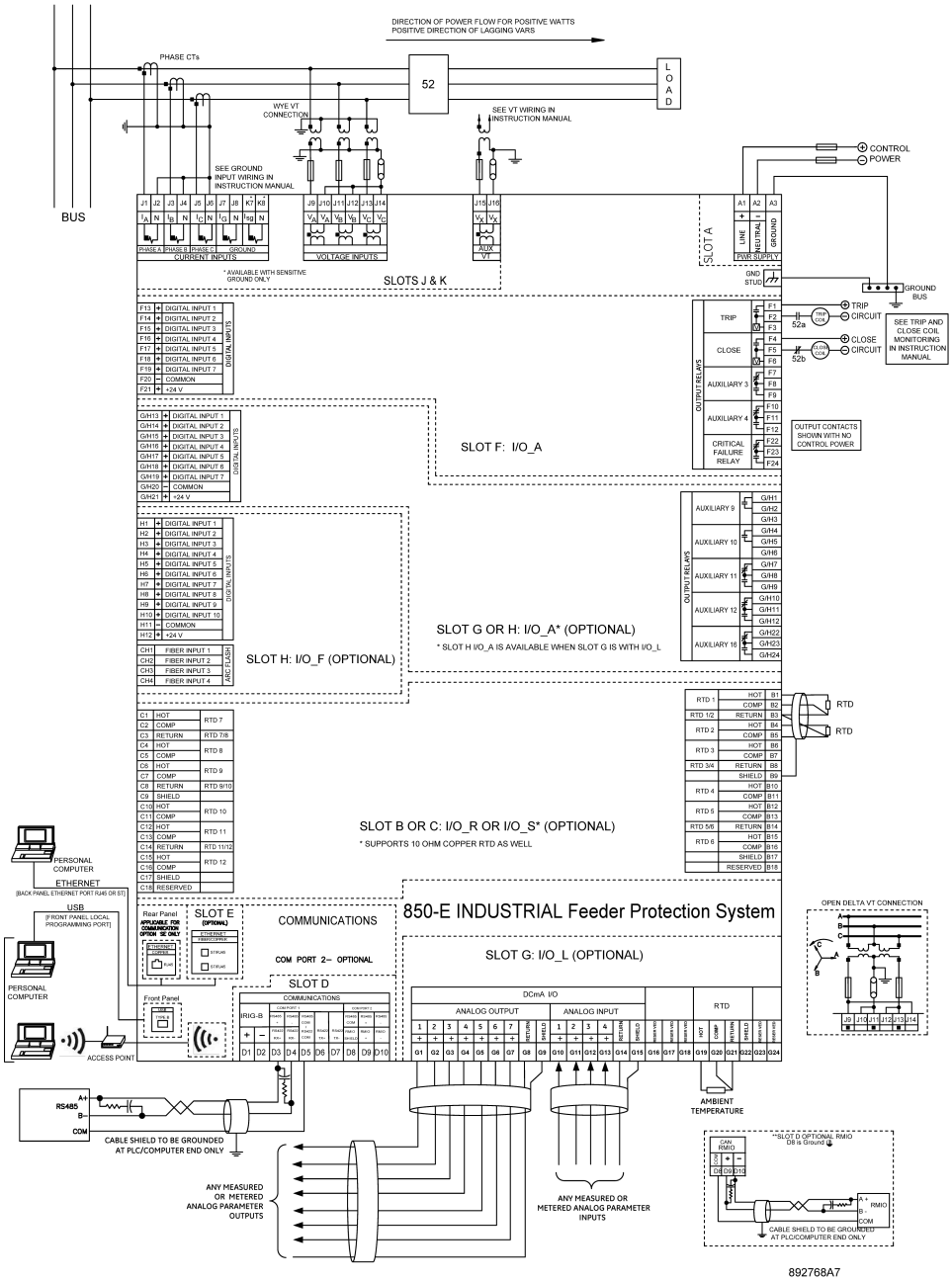

Figure 54: Typical wiring diagram – 850-E (892768A7)

CHAPTER 3

INTERFACES

3.1 CHAPTER OVERVIEW

This chapter contains the following sections:

Chapter Overview 82
First access 83
Front panel options 84
Software Interface 102

3.2 FIRST ACCESS

There are two methods of interfacing with the relay.

- Using the relay keypad and display.
- Using the EnerVista D&I Setup software software.

This section provides an overview of the interfacing methods using both of these methods.

When first accessing the relay, log in as Administrator either through the front panel or through EnerVista D&I Setup software connected serially (so that no IP address is required). Use the default password (the default password is **0**).

Basic Security

If the relay is in the commissioning phase and you want to bypass authentication, switch the ***SETPOINT ACCESS*** setting on or assign it to a contact input. Once the setting is on, you have complete administrator access from the front panel. If a contact input is chosen, the access is also conditional on the activation of the respective contact input.

CyberSentry

If logging in through EnerVista D&I Setup software, choose Device authentication and login as Administrator.

Note:
If the relay is in the commissioning phase, to bypass authentication use the setpoint access feature to gain administrative access to the front panel in the same way as with basic security.

3.3 FRONT PANEL OPTIONS

Relays from hardware version C (firmware version 4 onwards) can be delivered with following different front panels:

- The 10-pushbutton membrane faceplate
- The 3-pushbutton membrane faceplate

The front panels provide menu navigation through a selection of navigation pushbuttons and a high quality graphical display. The 3-button faceplate includes 3 programmable function pushbuttons and 17 programmable LEDs.

The 10-Pushbutton Membrane faceplate includes 10 programmable function pushbuttons for a total of 22 programmable LEDs.

The front panel provides menu navigation through a selection of navigation pushbuttons and a high quality graphical display. A USB type B port allows connection to a PC with EnerVista D&I Setup software software.

The following figures show the different options.

> *Note:*
> *These figures are representative only. They may not reflect the exact model that this manual describes.*

Figure 55: 3-pushbutton membrane front panel

Figure 56: 10-pushbutton membrane front panel

3.3.1 GRAPHICAL DISPLAY PAGES

The front panel liquid crystal display (LCD) allows visibility under various lighting conditions. When the keypad and display are not being used and there are no active Targets, the Home screen with system information is displayed after a user-defined period of inactivity. Pressing the **Escape** key during the display of the default message, returns the display to the previous display screen. Any Trip, Alarm, or Pickup operation causing a new active Target is displayed immediately, automatically overriding the Home screen.

3.3.1.1 MENU HIERARCHY

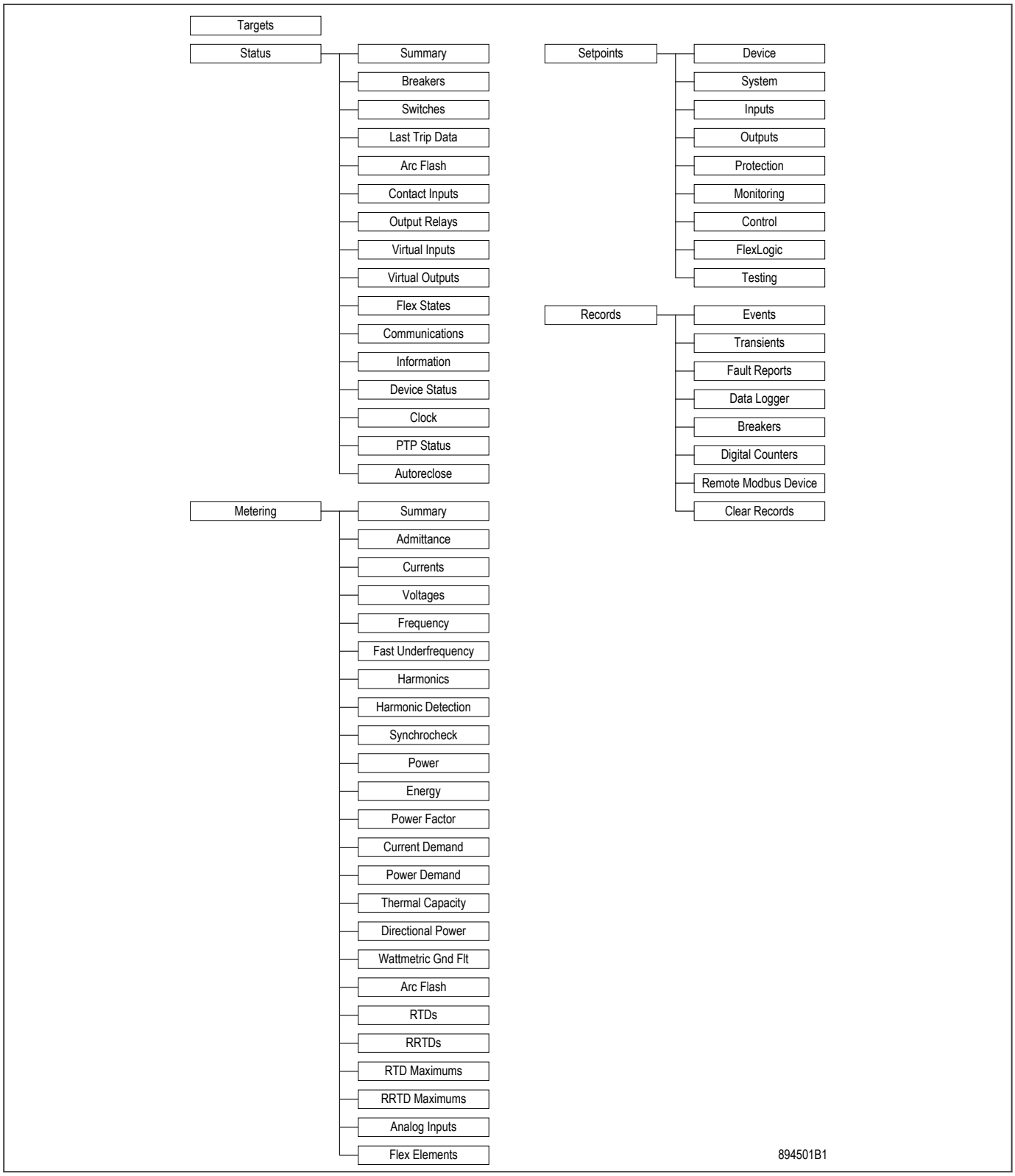

Figure 57: Menu hierarchy

3.3.1.2 WORKING WITH GRAPHICAL DISPLAY PAGES

The display contains five main menu items labeled Targets, Status, Metering, Setpoints, and Records located at the bottom of the screen. Choosing each main menu item displays the corresponding sub-menu.

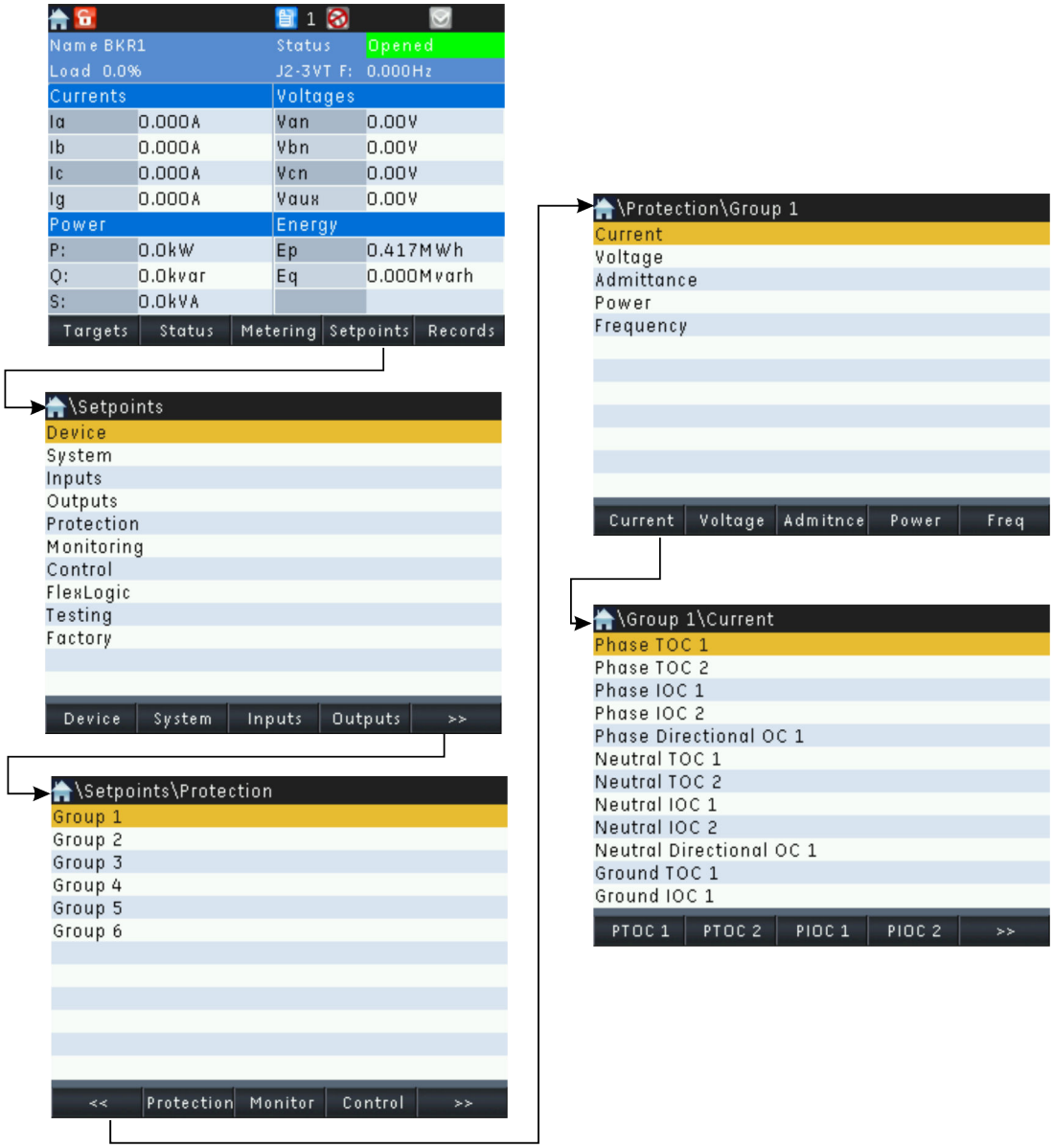

Figure 58: Typical paging

There are two ways of navigating through the menu:

- using the pushbuttons corresponding to the soft tabs from the screen
- by selecting the item from the list of items on the screen using the **Up** and **Down** pushbuttons to move the yellow highlighted line, and pressing the **Enter** pushbutton.

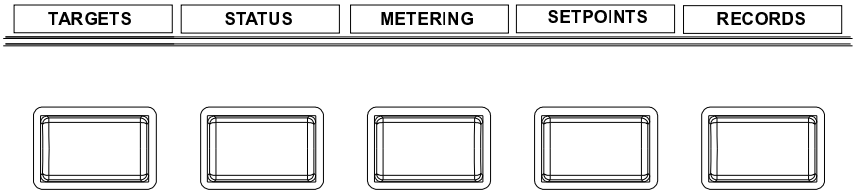

Figure 59: Tab Pushbuttons

The tab pushbuttons are used to enter the menu corresponding to the label on the tabs. If more than 5 tabs exist, the first and the last tab are labeled with arrows to allow you to scroll to the other tabs.

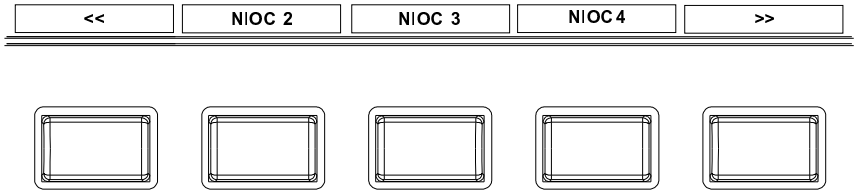

Figure 60: Keypad Pushbuttons

Each Keypad pushbutton serves the following function:

- The **Home** pushbutton is used to display the home screen, and all screens defined under the Front Panel/ Screens menu as default screens.
- The **Help** pushbutton is used to provide the Modbus address corresponding to the present location when in the Actual Values menu.
- The **Enter** pushbutton has a dual function. It is used to display a sub-menu when an item is highlighted. It is also used to save the desired value for any selected setpoint.

- The **Up**, and **Down** pushbuttons are used to select/highlight an item from a menu, as well as select a value from the list of values for a chosen item.
- The **Up**, **Down**, **Left** and **Right** pushbuttons on the membrane faceplate are used to move the yellow highlight. These pushbuttons are also used on special screens to navigate to multiple objects.
- The **Escape** pushbutton is used to display the previous menu. This pushbutton can also be used to cancel a setpoint change.
- The **Reset** pushbutton clears all latched LED indications, target messages, and latched output relays, providing the conditions causing these events are not present.

To change (or view) an item on (or from) the menus:

- Use the pushbuttons that correspond to the tabs (Targets, Status, Metering, Setpoints, Records) on the screen to select a menu.
- Use the **Up** and **Down** pushbuttons to highlight an item.
- Press **Enter** to view a list of values for the chosen item. (Some items are view-only.)
- Use the **Up** and **Down** pushbuttons to highlight a value.
- Press **Enter** to assign the highlighted value to the item.

3.3.1.3 SINGLE LINE DIAGRAM

BKR1 LED setting for Breaker symbol color configuration

In all devices the Breaker symbol color is configurable as per the color scheme setting in ***Setpoints*** > ***Device*** > ***Front Panel*** > ***Display Properties*** > ***Color Scheme***.

Single Line Diagram for 850 and Breaker status color

The relay has a single line diagram (SLD) that represents the power system. The single line diagram provided is pre-configured to show:

- Breaker status
- AC input connection
- System voltage

Accompanying the single line diagram are typical metered values associated with the power system.

The single line diagram is configured as the default menu but this can be changed under ***Setpoints*** > ***Device*** > ***Front Panel*** > ***Default Screen***.

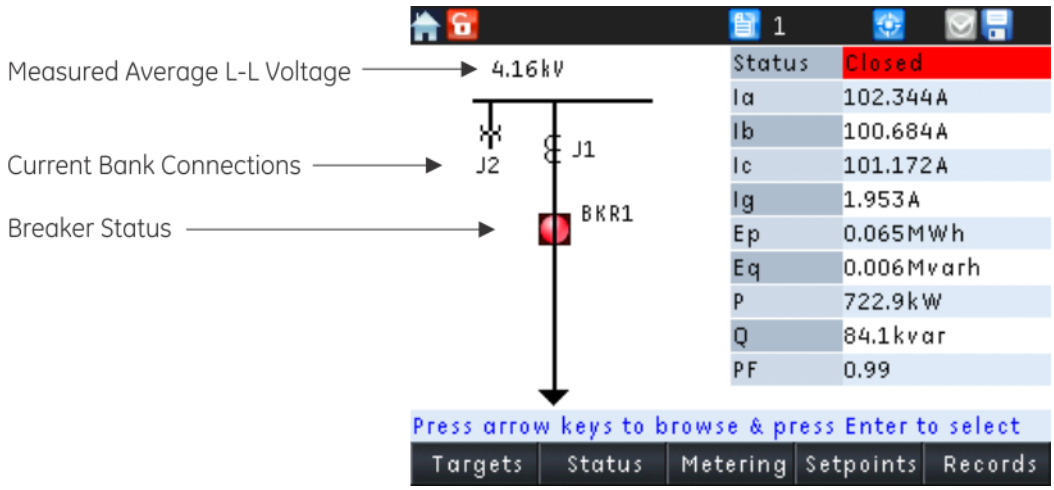

Figure 61: SLD and typical metered values screen

The breaker status icon changes state according to the breaker status input and the color of the icon changes in accordance with the color scheme setting (***Setpoints*** > ***Device*** > ***Front Panel*** > ***Display Properties*** > ***Color Scheme***).

	SLD Breaker Symbol Color				Breaker Status				
Color Scheme	Open Color	Close Color	Not Configured	Unknown	Open Color	Close Color	Not Configured	Unknown	Disconnected
Red (Open)					Red	Green	Orange	Orange	Orange
Green (Open)					Green	Red	Orange	Orange	Orange

Figure 62: Breaker Status Icons

When breaker detection Connected/Disconnected (Racked-In/Racked-Out) is configured, the symbols change with respect to the Connected/Disconnected state of the switching device.

Setpoint: Connected	Setpoint: Bkr Trolley	Breaker Trolley Status (Actual Value)	Connected/ Trolley (Flex Operand)	Symbol
Off	Off	Not Configured	NA*	
Any FlexLogic Operand (value of operand is 1)	Off	Not Configured	BKR # Connected	
Any FlexLogic Operand (value of operand is 1)	Any FlexLogic Operand (value of operand is 0)	Close	BKR # Connected	
Any FlexLogic Operand (value of operand is 0)	Off	Not Configured	BKR # Disconnected	
Any FlexLogic Operand (value of operand is 0)	Any FlexLogic Operand (value of operand is 1)	Open	BKR # Disconnected	
Any FlexLogic Operands	Any FlexLogic Operands	Unknown**	BKR # Trolley Bad Status**	

*If both the Connected and Bkr Trolley operands are equal (both 0 or both 1) the actual Breaker Trolley Status is unknown, and the Breaker Trolley Bad Status operand is generated. Refer to the Breaker Connected/Disconnected logic diagram for details.

The parameters displayed in the Front panel screen example are as follows:

Parameter	Input for the value
Ia	Metering\ CT Bank 1 -J1\ J1 Ia
Ib	Metering\ CT Bank 1 -J1\J1 Ib
Ic	Metering\ CT Bank 1 -J1\J1 Ic
Ig	Metering\ CT Bank 1 -J1\J1 Ig
Ep	Metering\ Energy 1\ Pwr1 Pos WattHours
Eq	Metering\ Energy 1\ Pwr1 Pos VarHours
P	Metering\ Power 1\ Pwr1 Real
Q	Metering\ Power 1\Pwr1 Reactive

Parameter	Input for the value
PF	Metering\ Power 1\Pwr1 PF

3.3.2 THREE-PUSHBUTTON FRONT PANEL LEDS

Front panel LED details:

- Number of LEDs: 17
- Programmability: Any FlexLogic operand
- Reset mode: self-reset or latched

The front panel provides two columns of 7 LED indicators each, and 3 LED pushbutton indicators. The **IN-SERVICE** (LED 1) indicator from the first LED column is a non-programmable LED. LED 3 in the first LED column is programmable and defaulted to **PICKUP**. The bottom 3 LED indicators from the first column, and the 7 LED indicators from the second LED column are fully programmable. The indicators **TRIP** (LED 2), and **ALARM** (LED 3), are also programmable, and can be triggered by either a selection of FlexLogic operand assigned in their own menu, or by the operation of any protection, control or monitoring element with function selected as `Trip`, `Alarm`, or `Latched Alarm`.

The **RESET** key is used to reset any latched LED indicator or Target Message once the condition has been cleared (latched conditions can also be reset via the **RESETTING** menu).

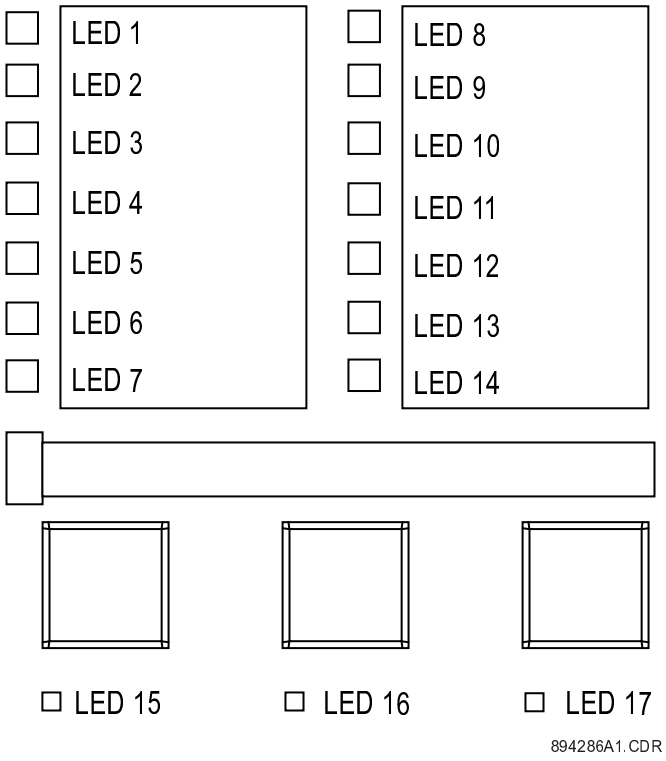

Figure 63: LED numbering

Some status indicators are common while some are feature specific which depend on the availability in the order code. The common status indicators in the first column are described below.

Status Indicator	Description
IN SERVICE	Green color = Relay powered up, passed self-test has been programmed, and ready to serve. This LED indicates that control power is applied, all monitored inputs, outputs, and internal systems are OK, and that the device has been programmed. Red color = Relay failed self test, has not been programmed, or out of service.

Status Indicator	Description
TRIP	This LED indicates that the element selected to produce a trip has operated. This indicator always latches; as such, a Reset command must be initiated to allow the latch to be reset.
ALARM	This LED indicates that the FlexLogic™ operand serving as an Alarm switch has operated. Latching of the indicator depends on the selected protection function. A Reset command must be initiated to allow the latch to be reset.
PICKUP	This LED indicates that at least one element is picked up. This indicator is never latched.
TEST MODE	This LED indicates that the relay has been set into Test Mode.
MESSAGE	This LED indicates the presence of Target Messages detected by the relay.
LOCAL MODE	This LED indicates that the relay is operating in local mode.

Breaker status indication is based on the breaker's 52a and 52b contacts. With both contacts wired to the relay and configured, closed breaker status is determined by closed 52a contact and opened 52b contact. Vice-versa the open breaker status is determined by opened 52a contact and closed 52b contact. If both 52a and 52b contacts are open, due to a breaker being racked out from the switchgear, both the Breaker Open and Breaker Closed LED Indicators will be off.

The Event Cause indicators in the first column are described as follows:

Events Cause LEDs are turned `On` or `Off` by protection elements that have their respective target settings selected as either `Self-Reset` or `Latched`. If a protection element target setting has `Self-Reset` selected, then the corresponding Event Cause LEDs remain `On` as long as the operate operand associated with the element remains asserted. If a protection element target setting is `Latched`, then the corresponding Event Cause LEDs turn `On` when the operate operand associated with the element is asserted and will remain `On` until the **RESET** button on the front panel is pressed after the operand is reset.

Default labels are shipped in the package of every product, together with custom templates. A custom LED template is available for editing and printing from the GE Vernova website. The default labels can be replaced by user-printed labels. Customization of LED operation is of maximum benefit in installations where languages other than English are used to communicate with operators.

3.3.3 TEN-PUSHBUTTON FRONT PANEL LEDS

Front panel LED details:

- Number of LEDs: 22 (LEDs 13 and 14 are not available)
- Programmability: Any FlexLogic operand
- Reset mode: self-reset or latched

The 10 Pushbutton-Membrane front panel provides one column of 12 multi-color LED indicators and 10 single-color LED pushbutton indicators. The **IN-SERVICE** (LED 1) and the **PICKUP** (LED 4) indicators from the first LED column are non-programmable LEDs. The indicators **TRIP** (LED 2), and **ALARM** (LED 3) are programmable, and can be triggered by either a selection of FlexLogic operand assigned in their own menu, or by the operation of any protection, control or monitoring element with function selected as `Trip`, `Alarm`, or `Latched Alarm`.

The **RESET** key is used to reset any latched LED indicator or Target Message once the condition has been cleared (latched conditions can also be reset via the **RESETTING** menu).

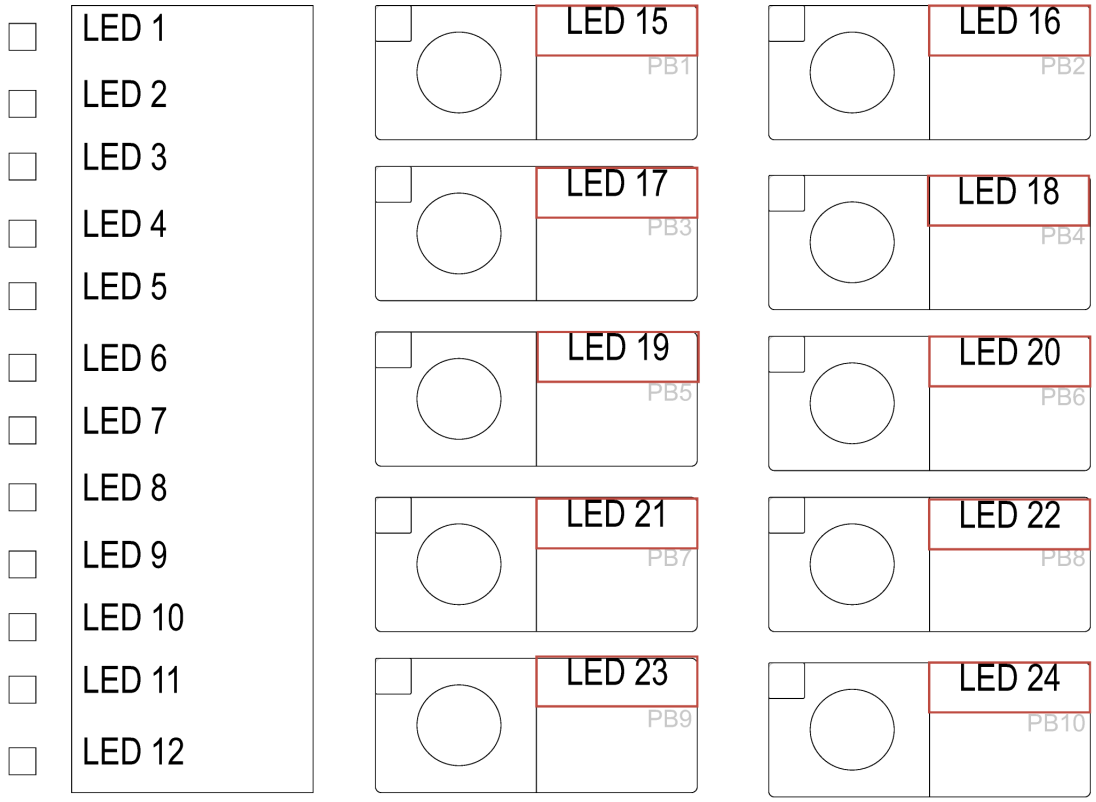

Figure 64: LED numbering

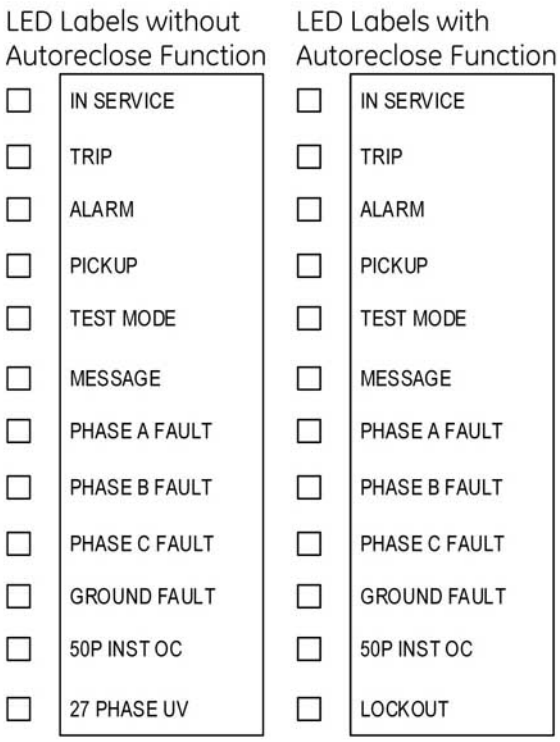

Figure 65: Typical LED Indicator Panel

Some status indicators are common while some are feature specific which is dependent upon the order code. The common status indicators in the first column are described below.

Status Indicator	Description
IN SERVICE	This LED indicates that control power is present, all monitored inputs, outputs, and internal systems are OK, and that the device is programmed.
TRIP	This LED indicates that the FlexLogic operand serving as a trip switch has operated. This indicator always latches so a reset command must be initiated to allow the latch to be reset.
ALARM	This LED indicates that the FlexLogic operand serving as an alarm switch has operated. Latching of the indicator depends on the selected protection function. The Reset command must be initiated to allow the latch to be reset.
PICKUP	This LED indicates that at least one element is picked up. This indicator is never latched.
TEST MODE	This LED indicates that the relay has been set into Test Mode.
MESSAGE	This LED indicates the presence of Target Messages detected by the relay.
PHASE A FAULT	This LED indicates that phase A of the Phase Time Overcurrent 1 function has operated.
PHASE B FAULT	This LED indicates that phase B of the Phase Time Overcurrent 1 function has operated.
PHASE C FAULT	This LED indicates that phase C of the Phase Time Overcurrent 1 function has operated.
GROUND FAULT	This LED indicates that the Ground Time Overcurrent 1 function has operated.
50P INST OC	This LED indicates that the Phase Instantaneous Overcurrent 1 function has operated.
27 PHASE UV (Order Code without Autoreclose)	This LED indicates that the Phase Undervoltage 1 function has operated.
LOCKOUT (Order Code with Autoreclose)	This LED indicates that the Autoreclose function has reached the lockout stage.

3.3.4 HOME SCREEN ICONS

The next figure shows the icons available on the front screen. For descriptions of these screen icons see the following table.

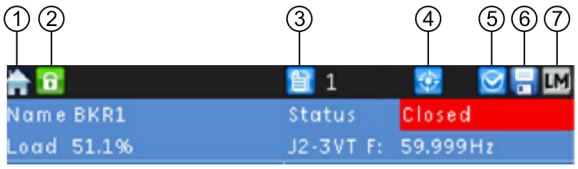

1. Home Icon
2. Security Access Icon
3. Setpoint Group Active Icon
4. Active Target Icon
5. Breaker Health Icon
6. Settings Save Icon
7. Local Mode Icon

Figure 66: Home Screen Icons

Icon Type	Description of Icon
Security Access	User not logged in - green and locked User logged in - Icon is red and unlocked
Setpoint Group	Identifies the active setpoint group

Icon Type	Description of Icon
Active Target	When the target auto navigation setting is disabled, the message LED and the Active Target icon are the only indication of active target messages.
Breaker Health	The Breaker Health icon is blue when the setting for the breaker health function is not disabled. When the setting is disabled the icon is gray.
Settings Save	Indicates that a setting is being saved on the relay (i.e., when changing one of relay settings). Icon is ON (relay is saving to flash memory) Icon is OFF (relay is not saving to flash memory)
Local Mode	Indicates that Local Mode is active. During Local Mode, the control for the breakers and disconnect switches can be performed only by the relay front panel.

Note:
The security icon only represents the security access level through the front panel.
Do not remove power from the relay whenever the Settings Save icon is ON. When power is removed the data being saved can also be lost.

3.3.5 RELAY MESSAGES

3.3.5.1 TARGET MESSAGES

Targets are messages displayed on the screen when any change of state of protection, control, monitoring, or digital signal takes place. Depending on the model, targets for each element are enabled, or latched by default. You can disable targets for any particular element if desired.

Target Messages are displayed in order of their activation, whereas in cases of simultaneous activation, they are displayed in the order outlined below (from highest to lowest priority):

1. Targets generated by pressing programmable pushbutton
2. Targets generated by Contact inputs
3. Targets generated by Protection, Control and Monitoring elements
4. Targets generated by communications.

In cases where the Pickup and Operate flags from an element are detected at the same time, the Pickup flag is not displayed. The Operate flag is displayed instead.

LED #6, from the first column of LEDs, is factory configured to be triggered by the FlexLogic operand ANY TARGET, to indicate the presence of at least one target message. This LED is labeled as **MESSAGE**. The LED can be programmed to any other FlexLogic operand by choice.

MESSAGE TIMEOUT

The timeout applies to every screen apart from the default screen. Examples include viewing, metering, or navigating to a screen with setting, etc. If no further navigation is performed, no pushbutton is touched, and/or no target is initiated for the time specified in the message timeout setpoint, the display goes back to the default screen (the metering summary screen).

The target message overrides the message timeout. The message timeout starts timing after each target message, and if no more activity is recorded for the specified time, the display goes back to the default screen.

Pressing a programmable pushbutton activates a new screen with a Target Message corresponding to the programmed pushbutton action. The pushbutton Target Message is displayed for 10 seconds then defaults to the screen that was displayed before pressing the pushbutton. The pushbutton Target Message is recorded in the list with other generated Target Messages.

Target Messages can be cleared either by pressing the pushbutton corresponding to the **CLEAR** tab, or by initiating a **RESET** command. The **CLEAR** command clears only the Target Messages, while initiating a **RESET** clears not only the Target Messages, but also any latched LEDs and output relays.

3.3.5.2 SELF-TEST ERRORS

The relay performs self-diagnostics at initialization (after power up), and continuously as a background task to ensure that the hardware and software are functioning correctly. There are two types of self-test warnings indicating either a minor or major problem. Minor errors indicate a problem with the relay that does not compromise protection and control functionality of the relay. Major errors indicate a problem with the relay which takes it out of service.

Caution:
Self-Test Warnings may indicate a serious problem with the relay hardware!

Upon detection of a minor problem, the relay does the following:

- Displays a detailed description of the error on the relay display as a target message
- Records the minor self-test error in the Event Recorder
- Flashes the **ALARM** LED

Upon detection of a major problem, the relay will:

- De-energize the relay assigned under setting Major Self-Test Relay if the relay is programmed for failsafe operation or energized if configured for non-failsafe operation.
- De-energize all output relays
- Turn off the **IN SERVICE** LED
- Flash the **TRIP** LED
- Assert the Self-Test Trip OP FlexLogic operand
- Display `Major Self-test error` with the error code as a target message
- Record the major self-test failure in the Event Recorder

When Alarm is selected as a function, upon detection of a major problem, the relay will:

- Flash the **ALARM** LED.
- Assert Self-Test Alarm OP FlexLogic operand.
- Display `Major Self-test error` with the error code as a target message
- Display `Major Self-test error` as a target message
- Record the major self-test failure in the Event Recorder.

Under both conditions, the targets cannot be cleared if the error is still active.

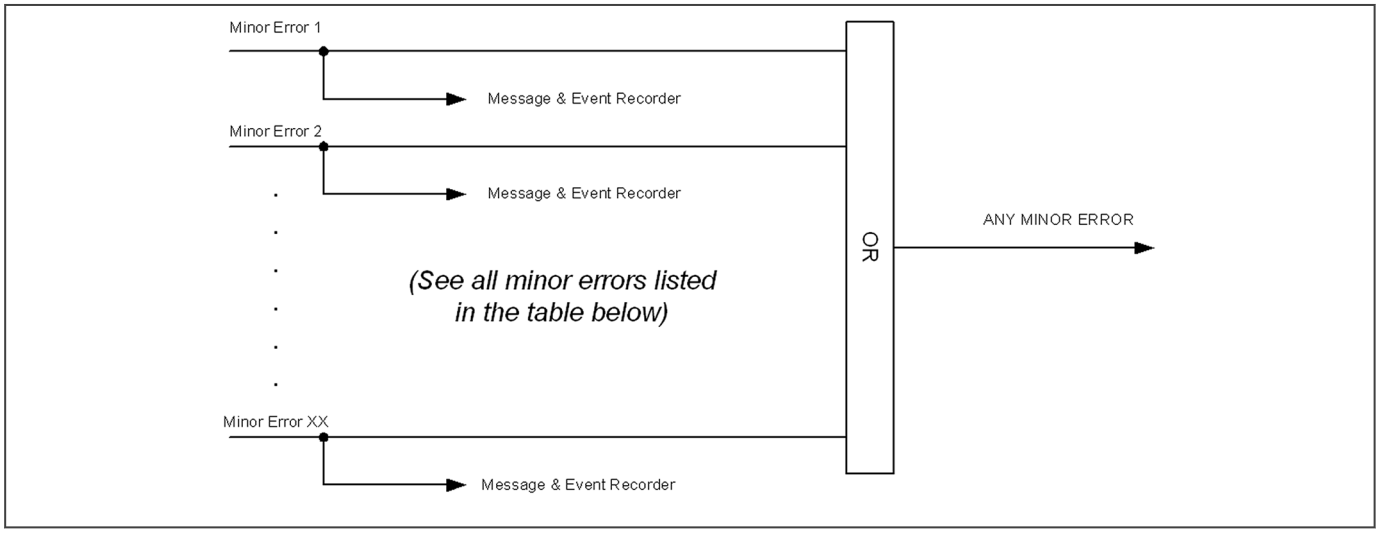

Figure 67: Minor Errors

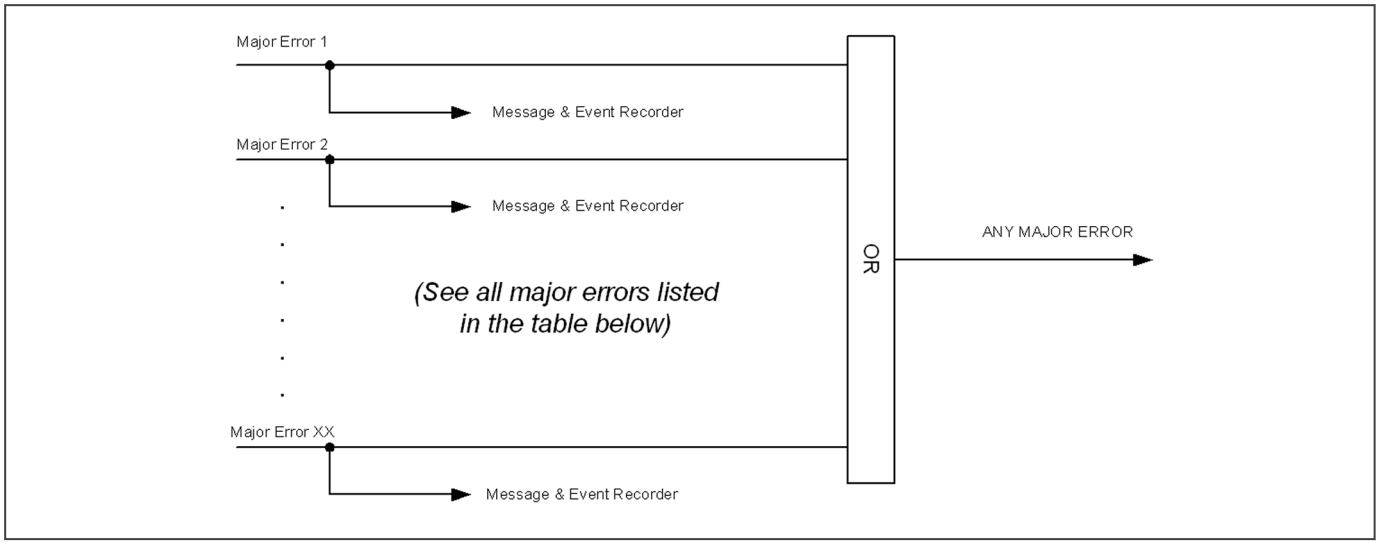

Figure 68: Major Errors

Minor self-test errors

Minor Self-test Error Message[1]	Description of Problem	Frequency of Test	What to Do
Order Code Error	Hardware doesn't match order code	Every 1 second	If alert doesn't self-reset then contact factory. Otherwise monitor re-occurrences as errors are detected and self-reset
CPU S/N Invalid	CPU card doesn't have valid data to match the order code.	Every 1 second	
Slot "$" IO S/N Invalid[2]	IO card located in slot $ doesn't have valid data to match the order code.	Every 1 second	
Comms S/N Invalid	Comms card doesn't have valid data to match the order code.	Every 1 second	
CPanel S/N Invalid	Control Panel doesn't have valid data to match the order code.	Every 1 second	
PSU S/N Invalid	Power Supply Unit doesn't have valid data to match the order code.	Every 1 second	
RTC Error	The CPU cannot read the time from the real time clock	Every 1 second	
Product Serial Invalid	The product serial number doesn't match the product type	Every 1 second	
Comm Alert #1	Communication error between CPU and Comms board	Every 1 second	
Comm Alert #2		Every 1 second	
Comm Alert #3		Every 1 second	
FLASH Error	The permanent storage memory has been corrupted	Every 1 second	
SPI Error	Communication error between CPU and LEDs, Keypad or peripheral memory devices	Every 1 second	
Invalid MAC Address	MAC address is not in the product range	Every 1 second	
Calibration Error	Unit has default calibration values	Boot-up and every 1 second	
Clock Not Set	Clock has the default time	Every 1 second	Set clock to current time
WiFi Default Settings	SSID and Passphrase is the factory default	Every 1 second	Set SSID and Passphrase
Link Error Primary[3]	Port 1 or Port 4 (depending on order code) is not connected	Every 1 second	Ensure Ethernet cable is connected, check cable functionality (i.e. physical damage or perform continuity test), and ensure master or peer device is functioning. If none of these apply, contact the factory.

Minor Self-test Error Message[1]	Description of Problem	Frequency of Test	What to Do
Link Error Secondary	Port 5 is not connected	Every 1 second	Ensure Ethernet cable is connected, check cable functionality (i.e. physical damage or perform continuity test), and ensure master or peer device is functioning. If none of these apply, contact the factory.
Traffic Error Primary	Abnormally high amount of Broadcast and Uni-cast traffic on port 1 or port 4	Every 1 second	Contact site IT department to check network for malfunctioning devices
Traffic Error Secondary	Abnormally high amount of Broadcast and Uni-cast traffic on port 5	Every 1 second	Contact site IT department to check network for malfunctioning devices
Ambient Temperature >80C	The ambient temperature surrounding the product has exceeded 80C	Every 1 second	Inspect mounting enclosure for unexpected heat sources (i.e loose primary cables) and remove accordingly
Event Rate High	Abnormally high amounts of events have been generated so the relay has stopped logging to prevent further issues	Every 1 second	Ensure settings are not set close to nominal ratings. Ensure FlexLogic equations do not have impractical timing for status events
IRIG-B Failure *Note:* *IRIG-B is not available for the 859*	A bad IRIG-B input signal has been detected	Every 1 second	Ensure IRIG-B cable is connected, check cable functionality (i.e. physical damage or perform continuity test), ensure IRIG-B receiver is functioning, and check input signal level (it may be less than specification). If none of these apply, contact the factory.
CAN_1 Error		Every 1 second	
CAN_2 Error		Every 1 second	
Version Mismatch	CPU and Comms do not have the same revision on firmware	Boot-up and Every 1 second	Ensure that both the CPU and Comms FW was uploaded during the upgrade process
SelfTestFWUpdate	The updating of the firmware failed	Every 1 second	Re-try uploading firmware. If the upload doesn't work a second time contact factory
Remote CAN IO Mismatch	RMIO card detection mismatch	Every 1 second	Check RRTD connections, check if the RRTD configuration is still valid, Validate CANBUS IO.

[1] Failure is logged after the detection of 5 consecutive failures

[2] $ is the slot ID (i.e. F, G, H etc.)

[3a] Link Error Primary can take up to 12 seconds to appear

[3b] To disable Link Error Primary target when not in use with SE order code, change IP address to 127.0.0.1

Major self-test errors

Major Self-test Error Message	Latched Target Message	Description of Problem	Frequency of Test	What to do
Relay Not Ready	No	***PRODUCT SETUP INSTALLATION*** setting indicates relay is not in a programmed state.	On power up and whenever the ***PRODUCT SETUP INSTALLATION*** setting is altered.	Program all required settings and then set the ***PRODUCT SETUP INSTALLATION*** setting to `Ready`.
Major Self-Test (error code)	Yes	Unit hardware failure detected	Every 1 second	Contact the factory and supply the failure code as noted on the display.

The following note is applicable to all 8S products apart from the 859

> *Note:*
> *When a total loss of power is present, the Critical Failure Relay (Output Relay 8) is de-energized.*

3.3.5.3 OUT OF SERVICE

When the relay is shipped from the factory, ***DEVICE IN SERVICE*** is set to `Not Ready`. The **IN SERVICE** LED will be orange and the critical fail relay will be de-energized but this will not be classified as a major self-test. An out of service event will be generated in the event recorder.

3.3.5.4 FLASH MESSAGES

Flash messages are warning, error, or general information messages displayed in response to pressing certain keys. The factory default flash message time is 2 seconds.

3.3.6 LABEL REMOVAL

For versions up to 3.xx, the front panels are supplied with a label removal tool for removing the LED label and user-programmable pushbutton label.

The following procedures describes how to use the label removal tool.

1. Bend the tabs of the tool upwards as shown in the image.

2. Slide the label removal tool under the LED label as shown in the next image. Make sure the bent tabs are pointing away from the relay. Move the tool inside until the tabs enter the pocket.

3. Remove the tool with the LED label.

The following describes how to remove the user-programmable pushbutton label from the front panel.

1. Slide the label tool under the user-programmable pushbutton label as shown in the next image. Make sure the bent tab is pointing away from the relay.

Remove the tool and user-programmable pushbutton label as shown in image.

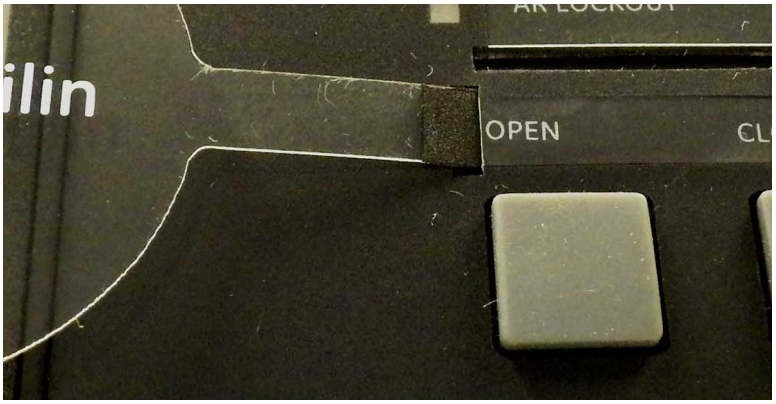

3.4 SOFTWARE INTERFACE

3.4.1 ENERVISTA D&I SETUP SOFTWARE

Although you can enter settings manually using the control panel keys, you can also use a PC to download setpoints through the communications port. EnerVista D&I Setup software is used to make this as convenient as possible. With EnerVista D&I Setup software, it is possible to:

- Program and modify settings
- Load setting files from a computer
- Save setting files to a computer
- Read actual values
- Monitor status
- Read pre-trip data and event records
- Get help on any topic
- Upgrade the firmware

The software allows immediate access to all features with easy to use pull down menus in the familiar Windows environment. This section provides the necessary information to install the software, upgrade the relay firmware, and write and edit setting files.

The software can run without a relay connected to the computer. In this case, settings may be saved to a file for future use. If a relay is connected to a PC and communications are enabled, you can configure the relay from the setting screens. In addition, measured values, status and trip messages can be displayed with the actual value screens.

3.4.1.1 HARDWARE & SOFTWARE REQUIREMENTS

EnerVista D&I Setup software has the following system requirements:

- Dual-core processor
- Microsoft Windows 10 or higher; 32-bit or 64-bit.
- At least 1 GB of free hard disk space is available.
- At least 2 GB of RAM is installed.
- 1280 x 800 display screen

The EnerVista D&I Setup software can be installed from the GE Multilin website.

3.4.1.2 INSTALLING ENERVISTA D&I SETUP SOFTWARE

Use the following procedure to install EnerVista D&I Setup software using the EnerVista D&I Setup software Launchpad application (found on the GE Multilin website).

1. Double-click the installation package and follow the instructions to install the software on the local PC.
2. When the installation is complete, start the EnerVista D&I Setup software Launchpad application.
3. Click the **IED Setup** section of the LaunchPad toolbar.
4. In the EnerVista D&I Setup software Launchpad window, click the **Add Product** button and select the required Protection System. Select the Web option to ensure the most recent software release.
5. Click the **Add Now** button to list software items. EnerVista D&I Setup software Launchpad obtains the latest installation software from the Web and automatically starts the installation process. A status window with a progress bar is shown during the downloading process.

6. Select the complete path, including the new directory name, where the software is to be installed.
7. Click on **Next** to begin the installation. The files are installed in the directory indicated, the USB driver is loaded into the computer, and the installation program automatically creates icons and adds the EnerVista D&I Setup software to the Windows start menu.
8. The required device is added to the list of installed IEDs in the EnerVista D&I Setup software Launchpad IED Setup window.

If you are going to communicate from your computer to the relay using the USB port:

1. Connect the USB cable from your computer to the relay's USB port.
2. Launch EnerVista D&I Setup software from the LaunchPad. Then in **EnerVista D&I Setup software 8 Series setup software > Device Setup**, select **USB** as the Interface type.
3. Select the **Read Order Code** button.

3.4.1.3 UPGRADING ENERVISTA D&I SETUP SOFTWARE

The latest software can be downloaded from the GE website.

After upgrading, check the version number under ***Help*** > ***About***. If the new version does not display, try uninstalling the software and reinstalling the new version.

3.4.2 CONNECTING ENERVISTA D&I SETUP SOFTWARE TO THE RELAY

3.4.2.1 USING THE QUICK CONNECT FEATURE

The **Quick Connect** button can be used to establish a fast connection through the front panel USB port of a relay.

Select **USB** and press the **Connect** button. Alternatively, Ethernet or WiFi (not all models) can be used as the interface.

When connected, a new site called **Quick Connect** appears in the **Site List** window.

The Site Device has now been configured via the Quick Connect feature for communications through whichever interface has been chosen.

3.4.2.2 CONFIGURING ETHERNET COMMUNICATIONS

Before starting, verify that the Ethernet cable is properly connected to the relevant Ethernet port.

> *Note:*
> *The relay supports a maximum of 3 TCP/IP sessions.*

1. Install and start the latest version of the software (available from the GE Multilin Website). See the previous section for the installation procedure.
2. Click on the **Device Setup** button to open the Device Setup window and click the **Add Site** button to define a new site.
3. Enter the desired site name in the Site Name field. If desired, a short description of the site can also be entered. In this example, we will use Substation 1 as the site name.
4. The new site appears in the upper-left list.
5. Click the **Add Device** button to define the new device.
6. Enter the desired name in the Device Name field, and a description (optional).
7. Select Ethernet from the Interface drop-down list. This displays a number of interface parameters that must be entered for proper Ethernet functionality.

8. Enter the IP address, slave address, and Modbus port values assigned to the relay (from the **Setpoints > Device > Communications** menu).
9. Click the **Read Order Code** button to connect to the relay and upload the order code. If a communications error occurs, ensure that the Ethernet communication values correspond to the relay setting values.
10. Click **OK** when the relay order code has been received. The new device will be added to the Site List window (or Online window) located in the top left corner of the main EnerVista D&I Setup software window.

The Site Device has now been configured for Ethernet communications.

3.4.2.3 CONNECTING TO THE RELAY

Now that the communications parameters have been properly configured, communications with the relay can be initiated.

1. Expand the Site list by double clicking on the site name or clicking on the **+** box to list the available devices for the given site.
2. The required device trees can be expanded by clicking the **+** box. The following list of headers is shown for each device:
   - Device Definition
   - Status
   - Metering
   - Quick Setup
   - Setpoints
   - Records
   - Maintenance
3. Expand the **Setpoints > Device > Front Panel** list item and double click on **Display Properties** or **Default Screens** to open the settings window.
4. The settings window opens with a corresponding status indicator on the lower left of the EnerVista D&I Setup software window.
5. If the status indicator is red, verify that the serial, USB, or Ethernet cable is properly connected to the relay, and that the relay has been properly configured for communications (steps described earlier).

The settings can now be edited, printed, or changed. Other setpoint and command windows can be displayed and edited in a similar manner. **Actual Values** windows are also available for display. These windows can be arranged and resized, if necessary.

3.4.2.4 CONFIGURING USB ADDRESS

By default, the relay USB port uses the network address 172.16.0.2. In some cases this IP is part of the corporate network for the computer and conflicts with existing computers or other devices on that network. To resolve this conflict, change the USB address to be in a different network. This change must be made to the computer settings, the relay settings, and the EnerVista D&I Setup software settings in order to connect to the relay through the USB port.

1. Open the Windows Control Panel and select **Network and Internet > Network Sharing**. The exact path may vary depending on the version of Windows.

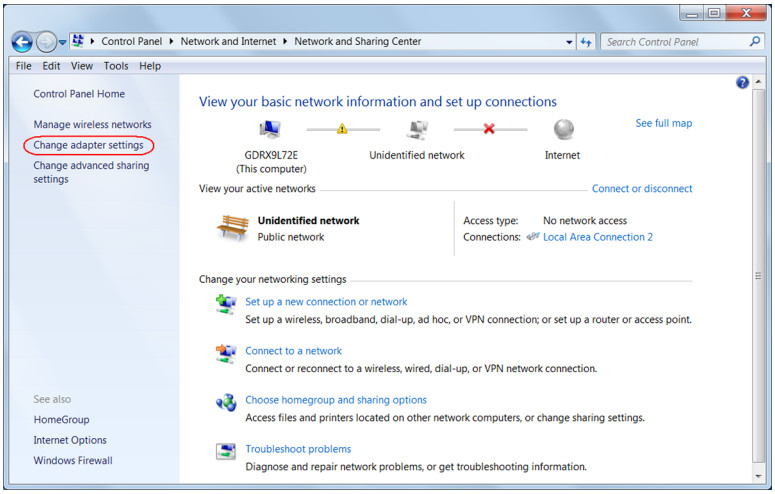

2. Click **Change adapter settings**.

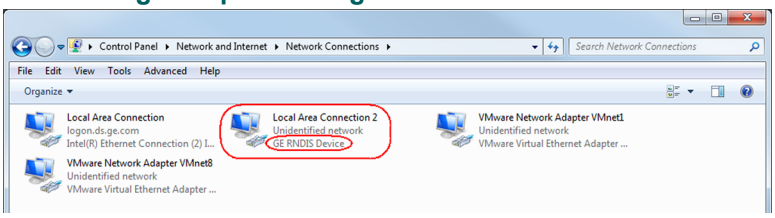

3. Find the **GE RNDIS Device** (or **GE RNDIS Device #2**) and right-click the network it is on to open the **Properties** window.
4. Select **Internet Protocol Version 4 (TCP/IPv4)** and click **Properties**.

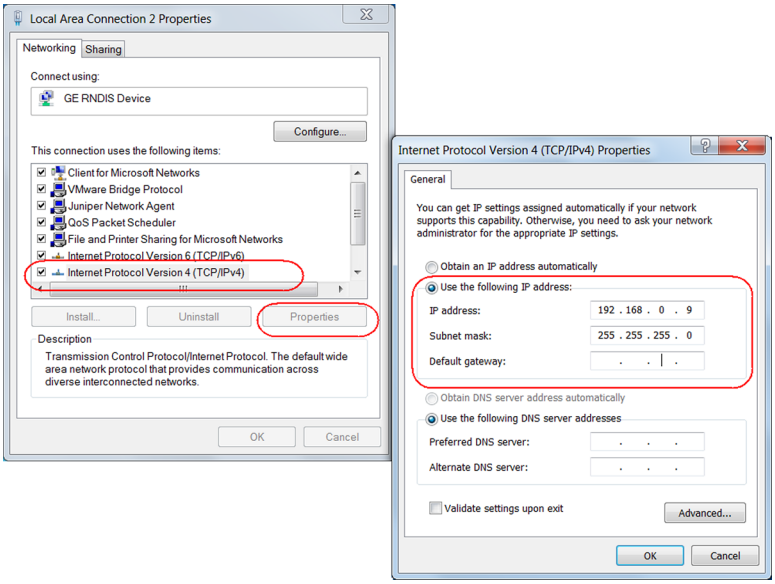

5. In the Internet Protocol Version 4 (TCP/IPv4) Properties window, ensure that **Use the following IP Address** is selected, and enter an appropriate IP address.
6. Click **OK** to save the new settings.
7. In the EnerVista D&I Setup software, navigate to **File > Preferences > USB** and change the IP address to match. This address will now be used by EnerVista D&I Setup software when the interface selected is USB.

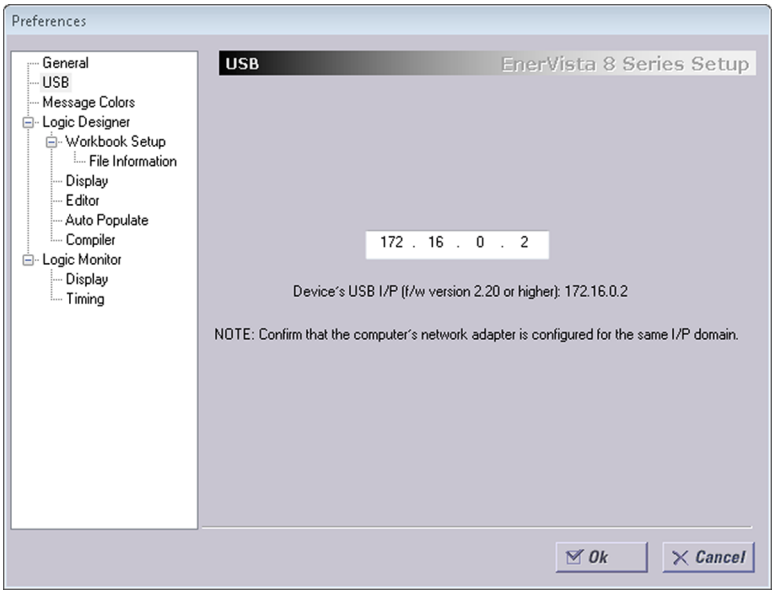

8. Click **OK** to save the new settings.
9. On the front panel of the relay, navigate to **Setpoint > Device > Communications > USB**.
10. Change both the **USB IP Address** and **USB GWY IP Address** setpoints to match the IP address the computer is now using.

The relay should now communicate with the computer through the USB port.

3.4.3 WORKING WITH SETPOINTS

When a settings file is being uploaded to a device, the ***DEVICE IN SERVICE*** setting switches to `Not Ready` for the duration of the upload. This ensures that all new settings are applied before the device is operational. A settings file uploads operations including the following:

- EnerVista D&I Setup software menu option **Write Settings File to Device**
- Logic Designer changes saved online
- SLD configuration saved online
- IEC 61850 configuration saved online
- FlexLogic configuration saved online
- CID file uploaded to device

Individual setting changes from the device front panel or the EnerVista D&I Setup software Online Window do not change the state of the ***DEVICE IN SERVICE*** setting.

3.4.3.1 ENGAGING A DEVICE

EnerVista D&I Setup software may be used in on-line mode (relay connected) to directly communicate with a relay. Communicating relays are organized and grouped by communication interfaces and into sites. Sites may contain any number of relays selected from the product series.

3.4.3.2 ENTERING SETPOINTS

The following **System Setup** page is used as an example to illustrate entering setpoints. In this example, we will changing the voltage sensing setpoints.

1. Establish communications with the relay.
2. Select the ***Setpoint*** > ***System*** > ***Voltage Sensing*** menu item.
3. Select the Aux. VT Secondary setpoint by clicking anywhere in the parameter box. This displays three arrows: two to increment/decrement the value and another to launch the numerical keypad.

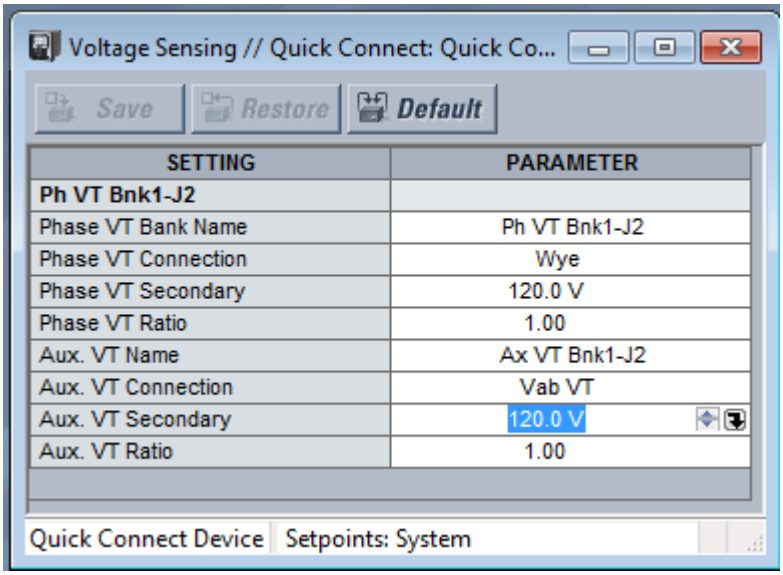

4. Clicking the arrow at the end of the box displays a numerical keypad interface used to enter values within the setpoint range displayed near the top of the keypad: Click **=** to exit from the keypad and keep the new value. Click on **X** to exit from the keypad and retain the old value.

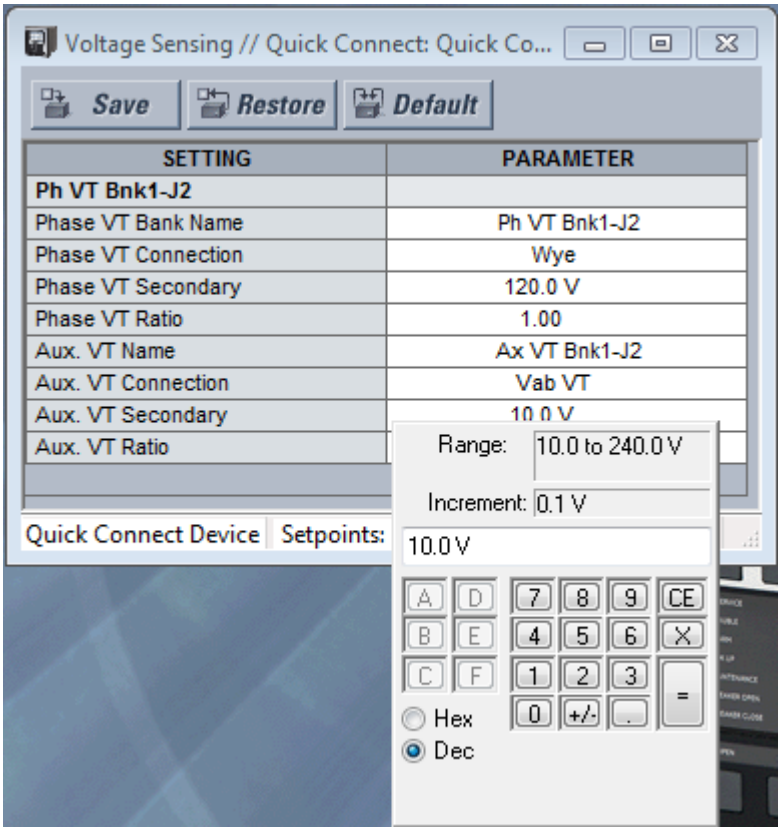

5. For setpoints requiring non-numerical pre-set values (e.g. ***Phase VT Connection*** below), clicking anywhere within the setpoint value box displays a drop-down selection menu arrow. Select the desired value from this list.

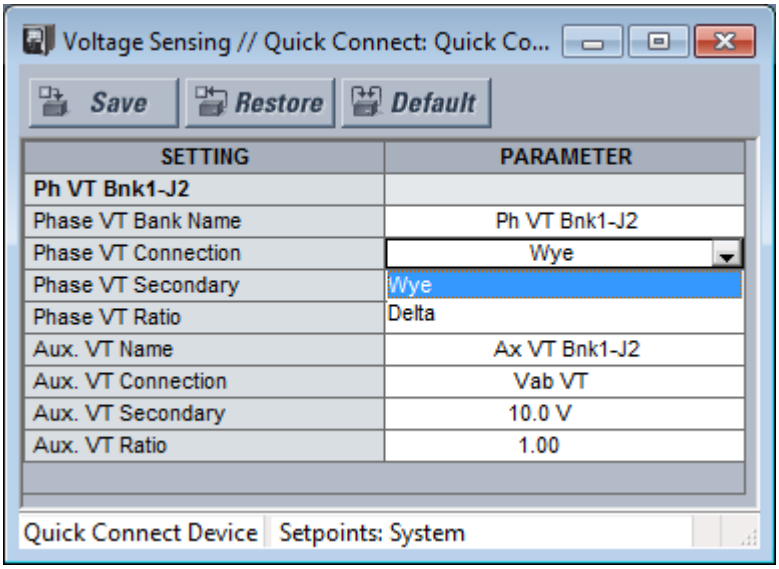

6. In the ***Setpoints*** > ***System Setup*** > ***Voltage Sensing*** dialog box, click on **Save** to save the values into the relay. Click **YES** to accept any changes and exit the window. Click **Restore** to retain previous values. Click **Default** to restore Default values.
7. For setpoints requiring an alphanumeric text string (e.g. relay name), the value may be entered directly within the setpoint value box.

> *Note:*
> *When using Setpoint Groups, an element from one group can be dragged and dropped on the same element in another group, copying all settings.*

3.4.3.3 USING SETPOINT FILES

The EnerVista D&I Setup software interface supports three ways of handling changes to relay settings:

1. In off-line mode (relay disconnected) to create or edit relay settings files for later download to communicating relays.
2. Directly modifying relay settings while connected to a communicating relay, then saving the settings when complete.
3. Creating/editing settings files while connected to a communicating relay, then saving them to the relay when complete.

Setting files are organized on the basis of file names assigned by the user. A setting file contains data pertaining to the following types of relay settings:

- Device Definition
- Relay Setup
- System Setup
- Protection
- Control
- Inputs/Outputs
- Monitoring
- FlexLogic
- Quick setup

- Protection summary
- IEC 61850 configurator
- Modbus user map

Factory default values are supplied and can be restored after any changes.

The relay displays relay setpoints with the same hierarchy as the front panel display.

3.4.3.4 DOWNLOADING AND SAVING SETPOINT FILES

You should make a backup of the in-service settings before any changes are made or any work undertaken on commissioned devices. This section describes how to backup settings to a file and how to use that file to restore settings to the original relay or to a replacement relay.

Setpoints must be saved to a file on the local PC before performing any firmware upgrades. Saving setpoints is also highly recommended before making any setpoint changes or creating new setpoint files.

The setpoint files in the EnerVista D&I Setup software window are accessed in the **Files** Window. Use the following procedure to download and save setpoint files to a local PC.

1. Ensure that the site and corresponding device(s) have been properly defined and configured.
2. Select the desired device from the site list.
3. Select **Read Device Settings** from the online menu item, or right-click on the device and select **Read Device Settings** to obtain settings information from the device.
4. After a few seconds, the software requests the name and destination path of the setpoint file. The corresponding file extension is automatically assigned. Press **Receive** to complete the process. A new entry is added to the tree, in the **File** pane, showing path and file name for the setpoint file.

3.4.3.5 ADDING SETPOINT FILES TO THE ENVIRONMENT

EnerVista D&I Setup software allows you to review and manage a large group of setpoint files. Use the following procedure to add an existing file to the list.

1. In the offline pane, right-click on **Files** and select the **Add Existing Settings File** item.
2. The **Open** dialog box is displayed, prompting to select a previously saved setpoint file.
3. Browse for the file to be added then click **Open**. The new file and complete path will be added to the file list.

3.4.3.6 CREATING A NEW SETPOINTS FILE

Eenrvista allows you to create a new setpoint files independent of a connected device. These can be uploaded to a relay at a later date. The following procedure illustrates how to create new setpoint files.

1. In the Offline pane, right click and select the **New Settings File** item. The **Create New Settings File** box appears, allowing for the configuration of the setpoint file for the correct firmware version. It is important to define the correct firmware version to ensure that setpoints not available in a particular version are not downloaded into the relay.
2. Select the Firmware Version, and Order Code options for the new setpoint file.
3. For future reference, enter some useful information in the **Description** box to facilitate the identification of the device and the purpose of the file.
4. To select a file name and path for the new file, click the button beside the **File Name** box.
5. Select the file name and path to store the file, or select any displayed file name to replace an existing file. All setpoint files should have the extension `.CID`.
6. Click **OK** to complete the process. Once this step is completed, the new file, with a complete path, is added to the software environment.

Note:
Offline settings files can be created for invalid order codes in order to support file conversion from different products, upgrades, and special orders. To validate an order code, visit the GE Multilin online store.
Filenames for setting files cannot have a period character (.) other than the one that is added in front of CID.

3.4.3.7 UPGRADING SETPOINT FILES TO A NEW REVISION

It is often necessary to upgrade the revision for a previously saved setpoint file after the firmware has been upgraded. This is illustrated in the following procedure:

1. Establish communications with the relay.
2. Select the ***Status*** > ***Information*** > ***Main CPU*** menu item and record the Firmware Version.
3. Load the setpoint file to be upgraded into the EnerVista D&I Setup software 8 Series setup software environment.
4. In the File pane, select the saved setpoint file.
5. From the main window menu bar, select the ***Offline*** > ***Edit Settings File Properties*** menu item and note the File Version of the setpoint file. If this version is different from the Firmware Revision noted in step 2, select a New File Version that matches the Firmware Revision from the pull-down menu. For example, if the firmware revision is J0J08AA150.SFD (Firmware Revision 1.50) and the current setpoint file revision is 1.10, change the New File Version to 1.5x.
6. Enter any special comments about the setpoint file in the **Description** field.
7. Select the desired firmware version from the **New File Version** field.
8. When complete, click **OK** to convert the setpoint file to the desired revision.

3.4.3.8 PRINTING SETPOINTS

EnerVista D&I Setup software allows you to print partial or complete lists of setpoints. Use the following procedure to print a list of setpoints:

1. Select a previously saved setpoints file in the File pane or establish communications with a relay.
2. If printing from an online device, select the ***Online*** > ***Print Device Information*** menu item. If printing from a previously saved setpoints file, select the ***Offline*** > ***Print Settings File*** menu item.
3. The Print/Export Options dialog box appears. Select **Setpoints** in the upper section and select either **Include All Features** (for a complete list) or **Include Only Enabled Features** (for a list of only those features which are currently used) in the filtering section and click **OK**.
4. Setpoint lists can be printed in the same manner by right clicking on the desired file (in the file list) or device (in the device list) and selecting the **Print Device Information** or **Print Settings File** options.

3.4.3.9 PRINTING VALUES FROM A CONNECTED DEVICE

A complete list of actual values can also be printed from a connected device with the following procedure:

1. Establish communications with the desired relay.
2. From the main window, select the ***Online*** > ***Print Device Information*** menu item
3. The Print/Export Options dialog box will appear. Select **Actual Values** in the upper section and select either **Include All Features** (for a complete list) or **Include Only Enabled Features** (for a list of only those features which are currently used) in the filtering section and click **OK**.

Actual values lists can be printed in the same manner by right clicking on the desired device (in the device list) and selecting the **Print Device Information** option.

3.4.3.10 LOADING SETPOINTS FROM A FILE

> *Note:*
> *An error message occurs when attempting to upload a setpoint file with a revision number that does not match the relay firmware.*

The following procedure illustrates how to load setpoints from a file. Before loading a setpoints file, it must first be added to the software environment.

1. Select the previously saved setpoints file from the File pane of the main window.
2. Select the ***Offline*** > ***Edit Settings File Properties*** menu item and verify that the corresponding file is fully compatible with the hardware and firmware version of the target relay.
3. Right-click on the selected file and select the **Write Settings File to Device** item.
4. Select the target relay from the list of devices shown and click **Send**. If there is an incompatibility, an Incompatible device order codes, versions or Serial Locks error will occur.

If there are no incompatibilities between the target device and the settings file, the data is transferred to the relay. An indication of the percentage completed is shown in the bottom of the main window.

3.4.3.11 UNINSTALLING FILES AND CLEARING DATA

The relay can be decommissioned by turning off the power to the unit and disconnecting the wires to it. Files can be cleared after uninstalling Emervista or the relay, for example to comply with data security regulations. On the computer, settings files can be identified by the `.CID` extension.

To clear the current settings file do the following:

1. Create a default settings file.
2. Write the default settings file to the relay.
3. Delete all other files with the `.CID` extension.
4. Delete any other data files, which can be in standard formats, such as `COMTRADE` or `.csv`.

You cannot directly erase the flash memory, but all records and settings in that memory can be deleted. Do this from the front panel or EnerVista D&I Setup software using: ***Command > Clear All Records***

3.4.4 QUICK SETUP

The **Quick Setup** item can be accessed online or offline in EnerVista D&I Setup software. Settings changes can be made from both of these screens.

Quick Setup is designed for quick and easy user programming. Power system parameters, and settings for some simple overcurrent elements are easily set. The **Quick Setup** screen works as follows:

- Settings names and units can be viewed at this screen. To view the range of the settings, hover the cursor over the setpoint value field.
- Configure and save the settings as required.
- The **Save**, **Restore** and **Default** buttons function the same as in the individual setting setup screens.
- If you enter a setting value which exceeds the range, when you attempt to save it a warning dialog box will appear. You must correct the setting value to ensure that it is within the permissible range and save it to proceed.

3.4.5 UPGRADING RELAY FIRMWARE

To upgrade the firmware, follow the procedures listed in this section. Upon successful completion of this procedure, the relay will have new firmware installed with the factory default setpoints.The latest firmware files are available from the GE website.

Note:
EnerVista D&I Setup software prevents incompatible firmware from being loaded into a relay.
Uploading firmware on a WiFi interface is not allowed.
Before upgrading firmware, it is very important to save the current settings to a file on your PC. After the firmware has been upgraded, it will be necessary to load this file back into the relay.

3.4.5.1 LOADING NEW RELAY FIRMWARE

Do the following to load new firmware into the relay's flash memory.

1. Connect the relay to the local PC and save the setpoints to a file.
2. Select the ***Maintenance*** > ***Update Firmware*** menu item. A screen appears with information on how long the upload will take. Select **OK** to proceed.
3. EnerVista D&I Setup software requests the new firmware file. Locate the folder that contains the firmware file to load into the relay.The firmware filename has the following format.

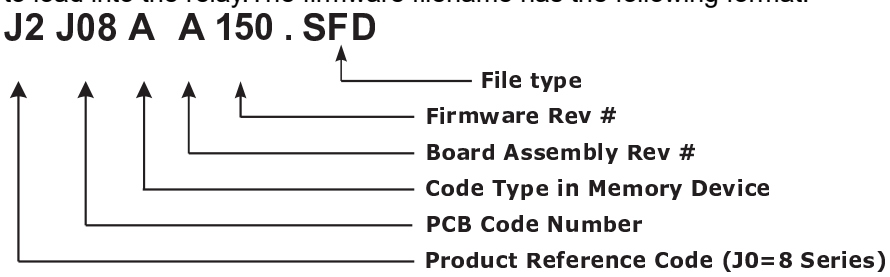

A screen appears advising that a backup of the settings file should be made before proceeding with the firmware upgrade. Select **YES** to proceed.

4. EnerVista D&I Setup software now prepares the relay to receive the new firmware file. The front panel momentarily displays `Upload Mode`.
5. A screen appears confirming the firmware versions of the target device and the selected `.SFD`. Click **YES** to proceed with the firmware loading process.
6. EnerVista D&I Setup software will prompt the user to reboot the relay after both the Boot 1 and Boot 2 uploads.

Note:
*The relay should be rebooted BEFORE pressing **OK**.*

7. Wait for the Comms upload process to complete.
8. Wait for the Mains upload process to complete.
9. EnerVista D&I Setup software notifies you when the relay is successfully updated.

Note:
Wait for the relay to boot up, then cycle power to the relay to complete the firmware update process.

After successfully updating the firmware, the relay is not in service and requires setpoint programming. To communicate with the relay, the communication settings may have to be manually reprogrammed.

When communication is established, you must reload the saved setpoints back into the relay.

Modbus addresses assigned to features, settings, and corresponding data items (i.e. default values, min/max values, data type, and item size) may change slightly from version to version of firmware. The addresses are rearranged when new features are added or existing features are enhanced or modified.

3.4.6 SLD CONFIGURATOR

The SLD Configurator allows users to create customized single line diagrams (SLD) for the front panel display. The SLDs must be configured from the SLD Configurator in the EnerVista D&I Setup software, located under ***Setpoints*** > ***SLD Configurator***. The SLD Configurator allows breakers, switches, metering, and status items on the SLD.

SLDs are viewed from the relay front panel and individual SLD pages can be selected for the default home screen pages. The relay provides several SLD pages. Each page can have a combination of active and passive objects. Status, metering, and control objects are active while the static images for bus, generator, motor, transformer, ground, etc. are passive objects.

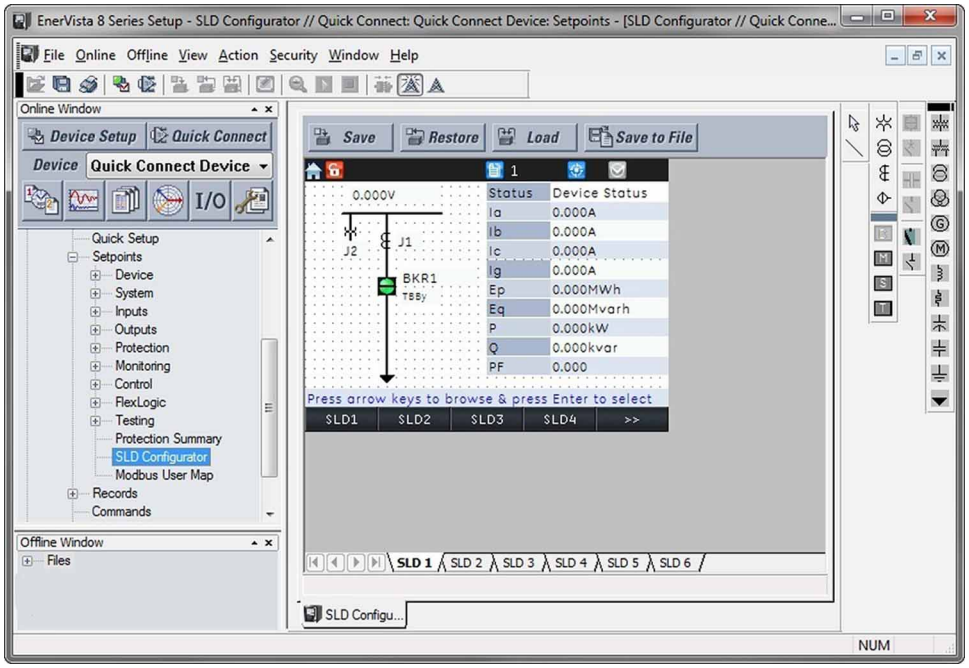

Figure 69: SLD Page

For optimum use, the first SLD page can be used for the overall SLD and the subsequent pages can be used for breaker/switch specific CT/VT placement, metering and status. Once the configurable SLDs are programmed, they are saved within the relay settings file. The SLD pages can also be saved individually as local XML files. The locally stored XML files can then be reloaded to generate another diagram. SLDs represent objects using GE symbols (similar to ANSI).

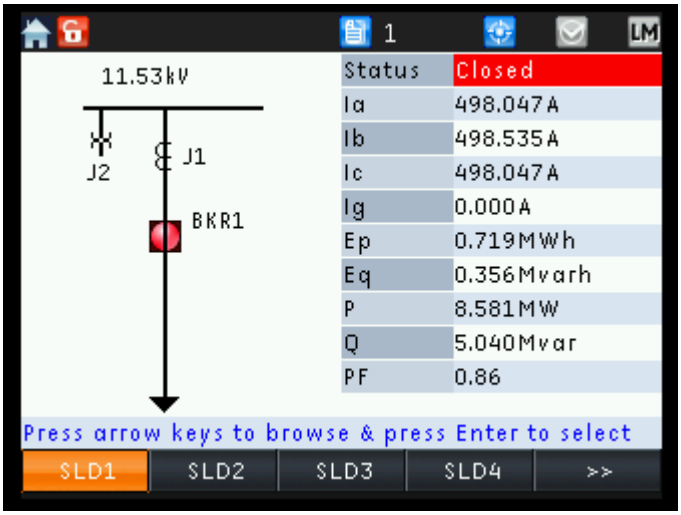

Figure 70: Template SLD

The following figure shows the objects that are available for design in the SLD Configurator and their maximum usage limits [X]. The maximum limit reflects the maximum possible order code.

Column1	Column2	Column3	Column4
Select	VT (GE) [12]	Breaker (GE) [1]	Transformer 2W (GE) [2]
Line [50]	VT (IEC) [12]	Breaker (IEC) [1]	Transformer 3W (GE) [2]
Separator	CT (GE) [12]	Separator	Transformer 2W (IEC) [2]
	CT (IEC) [12]		Transformer 3W (IEC) [2]
	Separator		Generator [2]
	Device Status [1]	Separator	Motor [2]
	Metering Object [15]	Disconnect Switch (GE) [9]	Reactor (for grounding) [5]
	Status Object [15]	Disconnect Switch (IEC) [9]	Resistor (for grounding) [5]
	Text Object [20]	Separator	Capacitor (polarity) [5]
	Remote Breaker (GE) [3] Remote Breaker (IEC) [3]		Capacitor (non-polarity) [5]
	Separator		Ground [10]
			Load [5]
			Separator

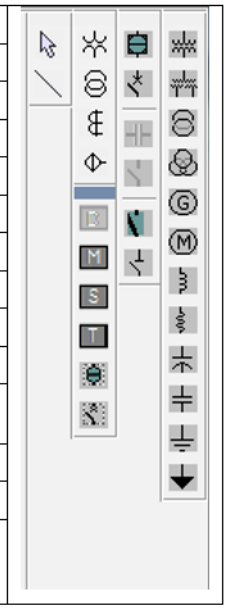

Figure 71: SLD Configurator Component Library

3.4.6.1 CONTROL OBJECTS

The control objects consist of selectable breakers and disconnect switches. The following figure shows the different symbols in the GE Standard style and IEC style. If the switching element is tagged, blocked, or bypassed, indicators with the letters **T**, **B**, and **By** appear on the lower right corner of the element. The breaker/switch name is displayed at the top of the object.

> *Note:*
> *The displayed breaker name is configured in the setpoint **Setpoints** > **System** > **Breakers** > **Breaker[X]** > **Name**. This setpoint has a 13-character limit. The name should be kept to a minimum so that it appears properly on the SLD.*

Component		Symbols	
		GE	IEC
Breaker	BKR Open		
	BKR Closed		
	BKR Bad Status		
	BKR Tagged (**T**) /Blocked (**B**) /Bypassed (**By**)	BKR1 TBBy	BKR1 TBBy
Breaker (Truck)	BKR Racked Out & Open		
	BKR Racked Out & Closed		
	BKR Racked Out & Bad Status		
	BKR Racked In & Open		
	BKR Racked In & Closed		
	BKR Racked In & Bad Status		
Contactor	Contactor Open		
	Contactor Closed		
	Contactor Unknown Status		
Disconnect Switch	SW Open		
	SW Closed		
	SW Unknown Status		
	SW Intermediate		
	SW Tagged (**T**) /Blocked (**B**) /Bypassed (**By**)	SW1 TBBy	SW1 TBBy

Figure 72: Control Object Symbols

> *Note:*
> *GE symbols are color-coded ANSI symbols.*

The control objects status follows the color scheme from the ***Setpoints*** > ***Device*** > ***Front Panel*** > ***Display Properties*** > ***Color Scheme*** setting. By default, this setting is set to `Green (open)`. If set to `Red (open)`, the status colors are reversed.

If the setting is used, the breaker symbols automatically change to the Truck CB symbols. The SLD assumes that if the Breaker Racked-In/Racked-Out input is used (anything other than `Off`), the appropriate Truck CB symbol will be used.

The following figure shows the orientation available for the control objects. The default position for the control objects is 0 degrees. Orientation in multiple directions allows for configuration of the single line diagram according to the existing drawings and ensure the correct side for the fixed/moving contacts.

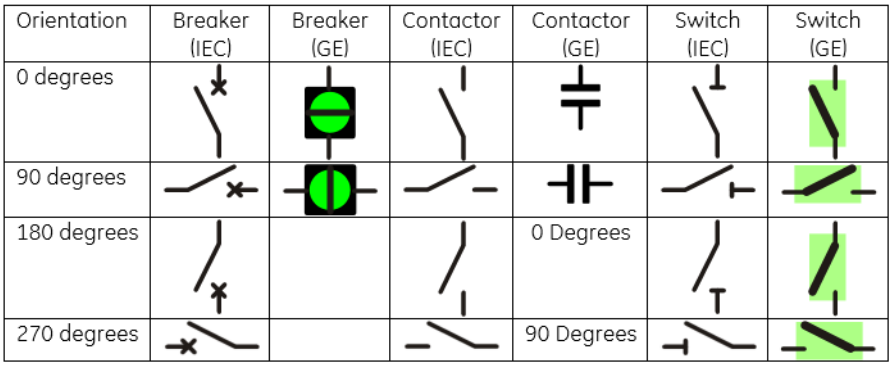

Figure 73: Orientation for Breakers and Switches

3.4.6.2 STATUS OBJECTS

The status objects consist of digital operands. Up to 15 digital status elements can be configured per SLD page. The status object acts as an LED on the screen. If the diagram shows a gray circle, it means the assigned input is low. If it shows a red circle, the assigned input is high. The following figure shows an example of the Reclose Blocked signal in both On and Off state.

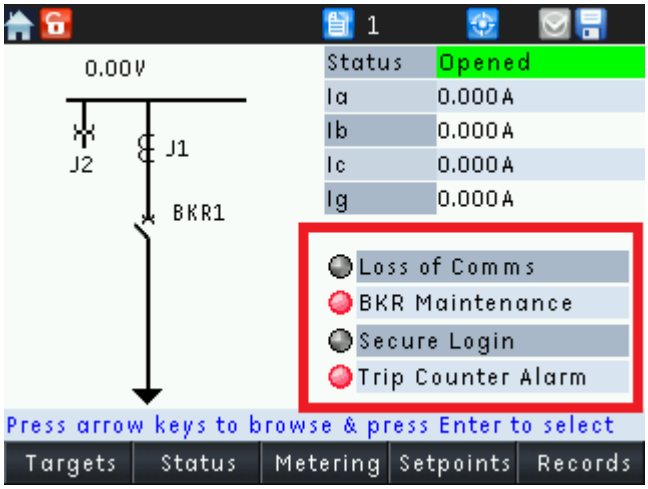

Figure 74: Reclose Blocked signal

In addition, Remote Breaker status objects are added for GE and IEC style. Remote breaker status allows monitoring of three distant breakers. These objects are not controllable and hence cannot be used for selection and operation.

3.4.6.3 METERING OBJECTS

The metering objects consist of metering elements. Up to 15 metering elements can be configured per SLD page. The metering object has an input for all the available FlexAnalog values. The units for these values are dynamically scaled as per the defaults. The following figure shows the metering element on a configured SLD.

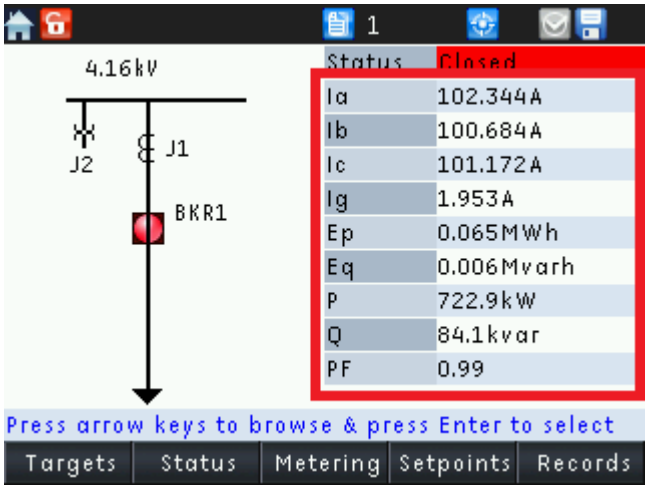

Figure 75: Metering Element on configured SLD

3.4.6.4 DEVICE STATUS OBJECT

The configurable SLD feature in the relay allows only one device status object per SLD page. The device status does not have any properties. It is simply shown as **Status: [device status]**.

3.4.6.5 STATIC OBJECTS

Static objects are used as simple bitmap images or text/drawing blocks to complete the single line diagram. There is no control associated with these static objects. The static objects consist of drawing tools, text object, and power system components.

3.4.6.6 FRONT PANEL INTERACTION

8 Series relays use the Select-Before-Operate (SBO) mechanism for local control of breakers and switches [IEC 61850-7-2]. Initially, the diagram can be browsed through all available breakers and switches by using the navigation keys. After navigation, selection must be made for the breaker or switch object by pressing the **Enter** key. After selecting the desired switch or breaker, control operations can then be carried out on the selected switch or breaker. The relay allows local opening, closing, tagging, blocking, and bypassing. Front panel control is only allowed when the relay is in Local Mode.

3.4.6.6.1 NAVIGATION

The SLD can be accessed in two ways from the front panel of the relay. The original location for the SLD pages is under ***Status > Summary > SLD (Single Line Diagram) [x]***. However, a more convenient way to access an SLD page is by setting it as a default home screen at ***Setpoints*** > ***Device*** > ***Front Panel*** > ***Home Screens*** > ***Home Screen1***. Pressing the home button more than once rotates through the configured home screens. If the desired SLD is set to ***Home Screen 2*** through ***Home Screen 10***, it can be activated by pressing home button until it appears on the screen. If no home screen is configured, the default screens become active. If the default screens are disabled, ***Status*** > ***Summary*** > ***Values*** screen is shown.

3.4.6.6.2 BREAKER/SWITCH BROWSING AND SELECTION

While in the SLD screen, only one page is active at any point of time. If SLD1 is active, only breakers and switches on SLD1 can be operated and controlled. By default, when entering the SLD menu, the screen displays SLD1. SLD2 through SLD6 can be accessed through the navigation pushbuttons as shown in the **Active element selection with flash message** figure, found later in this section.

To browse through the control elements on the SLD page, the navigation keys can be used. On the rugged front panel, the up and down keys can be pressed for navigation and on the membrane front panel, up, down, left, and right keys can be pressed. With the rugged front panel navigation, pressing down sequentially rotates through all

the available breakers and switches on the screen. Pressing the up key rotates through in a reverse order. With the membrane front panel, the up, down, left, and right keys can navigate to the closest breaker/switch depending on the key press direction.

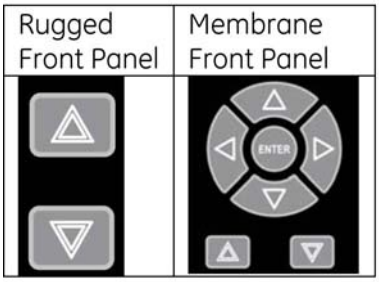

Figure 76: Navigation keys

While browsing through switches/breakers the active element is shown with a blue colored border around it. To select a breaker/switch, the browsing indicator border must be around the desired breaker or switch. The breaker or switch can then be selected by pressing the **Enter** key. As the breaker or switch is being selected, a flash message appears indicating that the breaker or switch has been selected as shown in the following figure. Once the element is selected for operation, the SLD control pushbuttons appear and the color of the highlighter will change to maroon indicating that the breaker or switch is selected. By default, the control pushbuttons are programmed for **Tag**, **Block**, and **Bypass**. For each control action, a flash message is displayed.

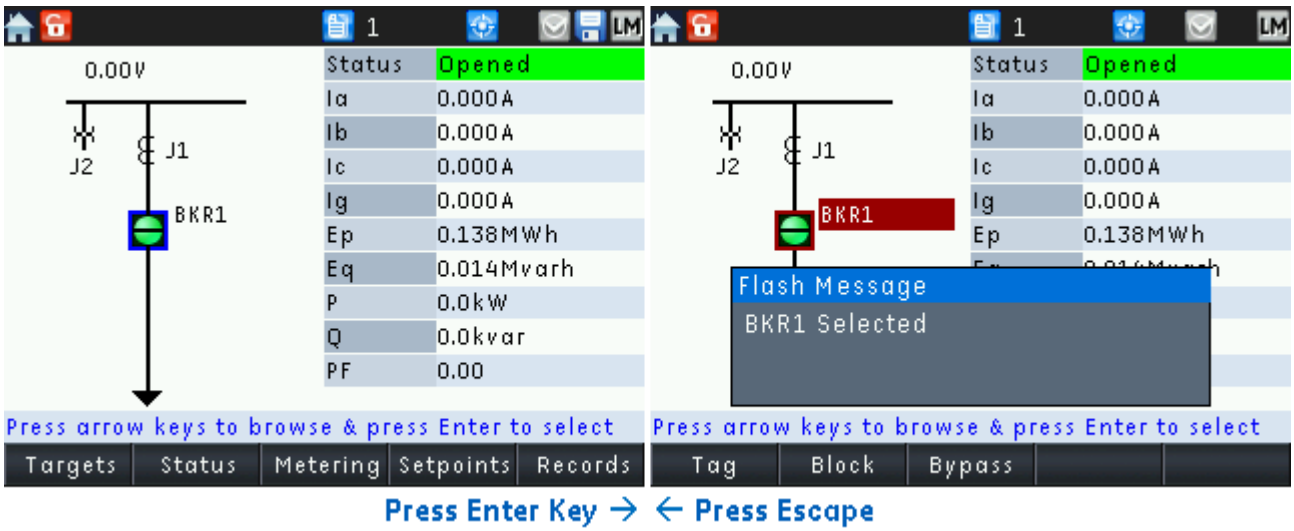

Figure 77: Active element selection with flash message

Browsing and selection is allowed only when the relay is in Local Mode and the user has security access of at least operator level. To check if the relay is in local mode, look for an **LM** symbol on the task pane at the top of the screen. Pressing navigation keys on SLD pages while in remote mode does nothing.

Control pushbuttons appearing on the SLD page are only active while a control object is selected.

The control object is deselected if you navigate to any screen other than the SLD or by pressing the **Escape** key. If no action is taken after selection, the object is automatically deselected after the Bkr/Sw Select timeout setting (***Setpoints*** > ***Control*** > ***Control Mode*** > ***Bkr/Sw Select Timeout***). Once deselected, the control pushbutton labels return to the SLD page navigation labels and the color of the box around the object changes back to blue for browsing. Pressing **Escape** once more removes the browsing highlight around the objects. If inactive during browsing for the timeout setting (***Setpoints*** > ***Device*** > ***Front Panel*** > ***Message Timeout***), the browsing highlight around the object disappears. If an object is selected, **Home** button operation is prohibited. The object must be de-selected by pressing **Escape** in order for the **Home** button to function.

After upgrading from firmware versions 1.3x to 1.7x, the breaker/contactor starting/stopping operations from the front panel now follow a select-before-operate mechanism. The breaker/contactor must be first selected by browsing and pressing the **Enter** key for selection. Once selected, the function can be started or stopped with the front panel's pushbuttons.

3.4.6.6.3 CONTROL OPERATIONS

The control operations carried out through the front panel of the relay are done only in Local Mode (***Setpoints*** > ***Control*** > ***Local Control Mode*** > ***Local Mode***). Opening and closing operations can be carried out by pressing the **Open** and **Close** pushbuttons on the relay front panel. Other operations such as tagging, blocking and bypassing can be carried out by pressing the control pushbuttons that appear after the control object selection.

> *Note:*
> *Remote operations are allowed for opening, closing, blocking, and bypassing. Tagging must be done locally.*
> *It is recommended that tagging is only used for maintenance purposes. When a breaker or a switch is tagged, it cannot be bypassed although the letters **By** may appear below the element on SLD.*
> *If breaker is selected and relay status is changed to Out-of-Service, the breaker control actions, such as tag, blocked, bypass and open/close are blocked. The breaker may remain in the selected state, but no action can be executed.*

Once the selected breaker or switch is tagged, a letter **T** appears below the associated element. Similarly, for blocking, letter **B** appears and for bypassing, letters **By** appear below the associated breaker or switch as shown in the last column of the following figure. The blocking and bypassing letters also appear if the breakers/switches are blocked or bypassed remotely. These are linked to their respective breaker/switch in the SLD Configurator window so that when that breaker/switch is deleted, the letters also get deleted.
Permitted breaker/switch operations are described in the following figure when various letter indications are present under the control element.

Breaker/Switch Position	Letter Indication	Operation	Sample Indication
Open	B	Closing is blocked.	
Closed	B	Opening is blocked.	
Open	B By	Closing is blocked but bypassing is allowed. Closing is permitted.	
Closed	B By	Opening is blocked but bypassing is allowed. Opening is permitted.	
Open or Closed	T	Tagged by operator. No operation allowed.	
Open or Closed	T By	Tagged by operator. No operation allowed.	
Open or Closed	T B By	Tagged by operator. No operation allowed.	

Figure 78: Permitted operations

3.4.7 FLEXCURVE EDITOR

The FlexCurve Editor is designed to graphically view and edit the FlexCurve. The FlexCurve Editor screen is shown as follows for FlexCurves A, B, C, and D:

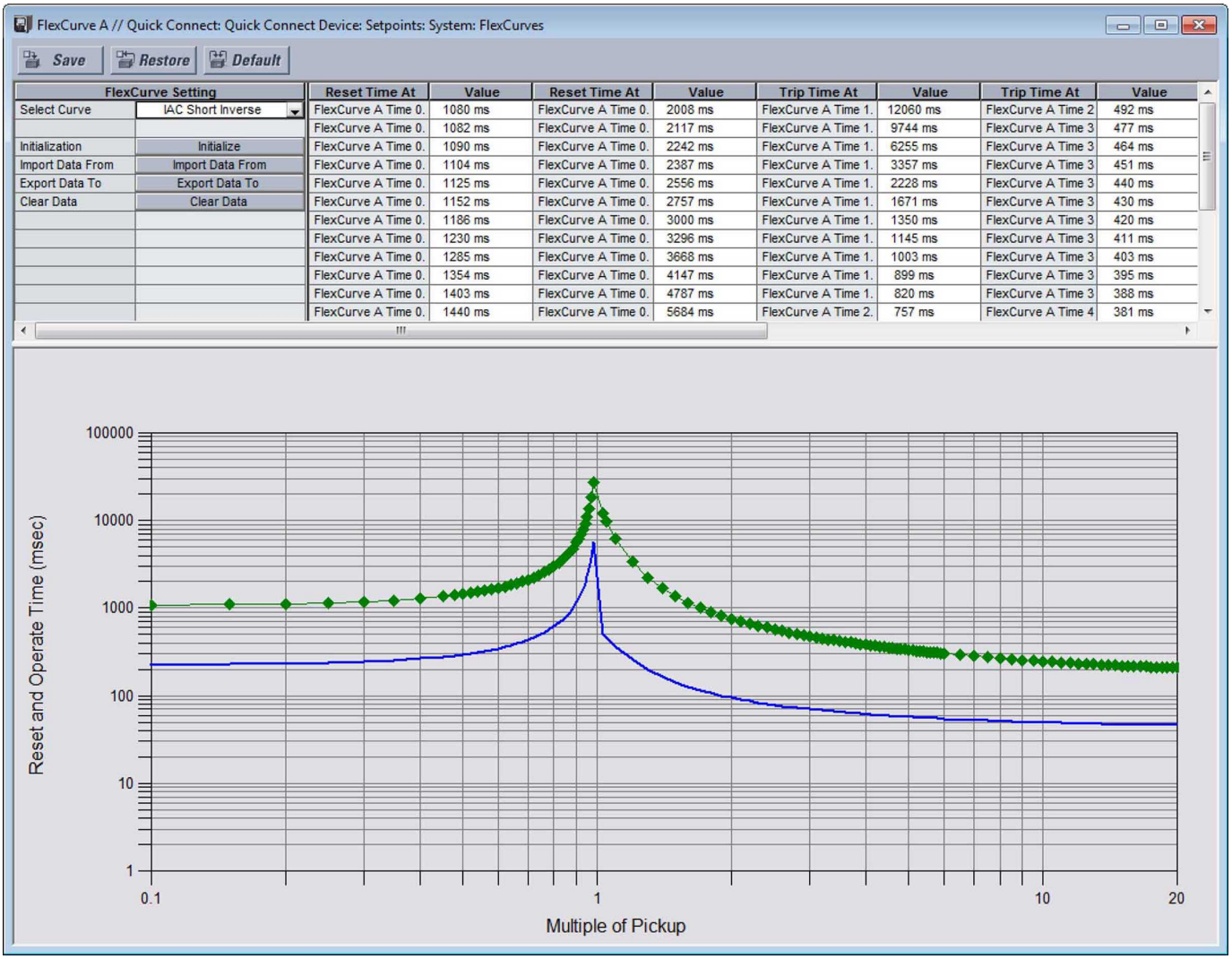

Figure 79: FlexCurve editor

- The Operate Curves are displayed, which can be edited by dragging the tips of the curves
- A Base curve can be plotted for reference, to customize the operating curve. The blue colored curve in the picture is a reference curve. It can be Extremely Inverse, Definite Time, etc.
- The Trip (Reset and Operate) Times in the tables and curves work interactively i.e., changing the table value affects the curve shape and vice versa.
- Save Configured Trip Times.
- Export Configured Trip Times to a CSV file
- Load Trip Times from a CSV File
- The screen above shows the model for viewing FlexCurves. Select **Initialize** to copy the trip times from the selected curve to the FlexCurve.

3.4.8 TRANSIENT RECORDER (WAVEFORM CAPTURE)

EnerVista D&I Setup software can be used to capture waveforms (or view trace memory) from the relay at the instance of a pickup, trip, alarm, or other condition.

Note:
The COMTRADE Version used on 8 Series relays is C37.111-1999.

- With EnerVista D&I Setup software running and communications established, select the ***Records*** > ***Transients*** > ***Transient Records*** menu item to open the Transient Recorder Viewer window.
- Click on **Trigger** to trigger a waveform capture.
- To view the captured waveforms, click on the **Launch Viewer** button. A detailed Waveform Capture window appears as shown below.
- Click on the **Save** button to save the selected waveform to the local PC. A new window appears, requesting the file name and path. One file is saved as a COMTRADE file, with the extension CFG. The other file is a DAT file, required by the COMTRADE file for proper display of waveforms.
- To view a previously saved COMTRADE file, click the **Open** button and select the corresponding COMTRADE file.

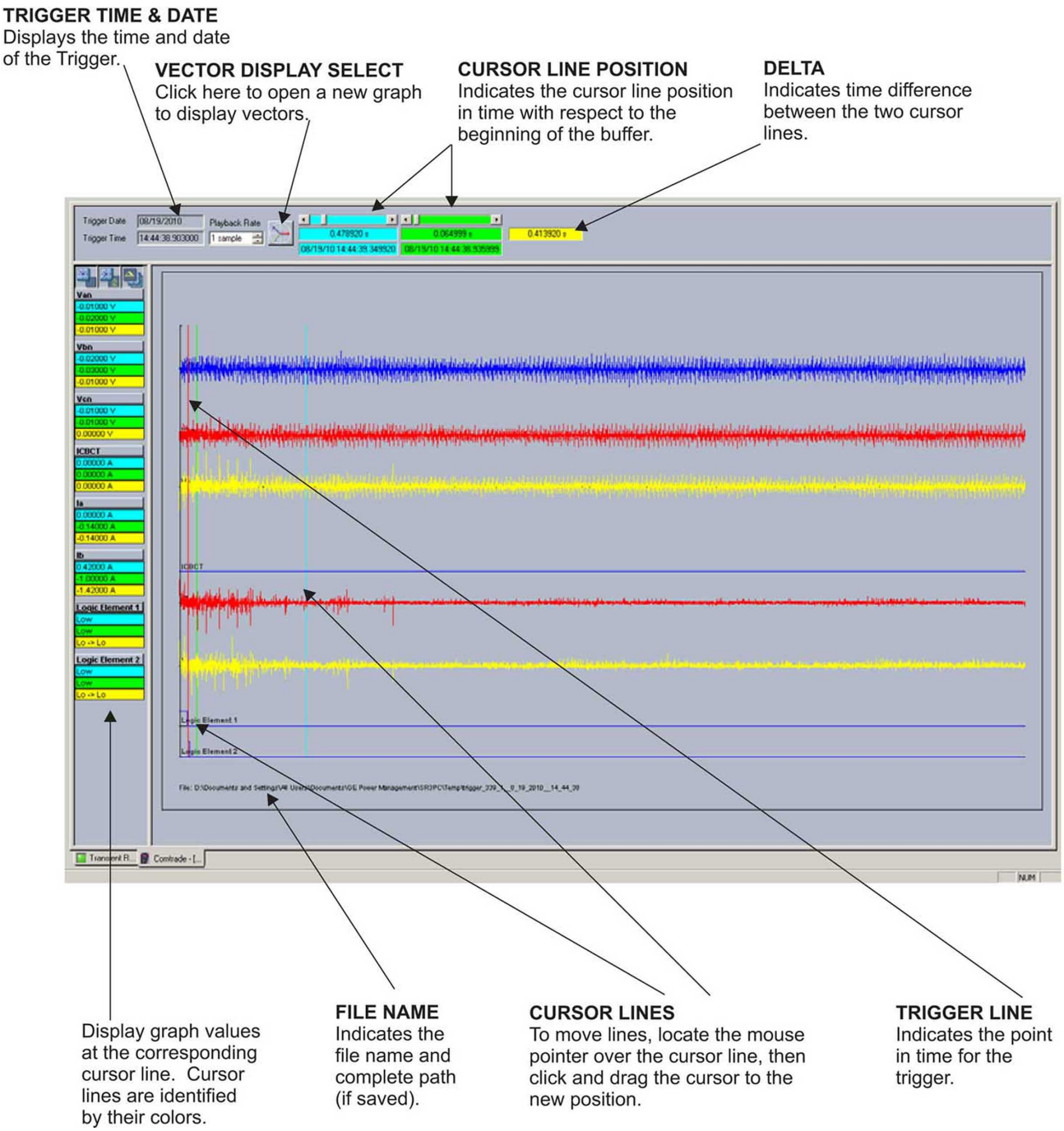

Figure 80: Oscillography

- The red vertical line indicates the trigger point.
- The date and time of the trigger are displayed at the top left corner of the window. To match the captured waveform with the event that triggered it, make note of the time and date shown in the graph, then find the

event that matches the same time in the event recorder. The event record provides additional information on the cause and system conditions at the time of the event.

- From the window main menu bar, press the **Preference** button

to open the COMTRADE Setup page, in order to change the graph attributes. Change the color of each graph as desired and select other options as required by checking the appropriate boxes. Click **OK** to store these graph attributes and to close the window. The Waveform Capture window reappears based on the selected graph attributes.

- To view a vector graph of the quantities contained in the waveform capture, press the **View Phasors** button to display the following window:

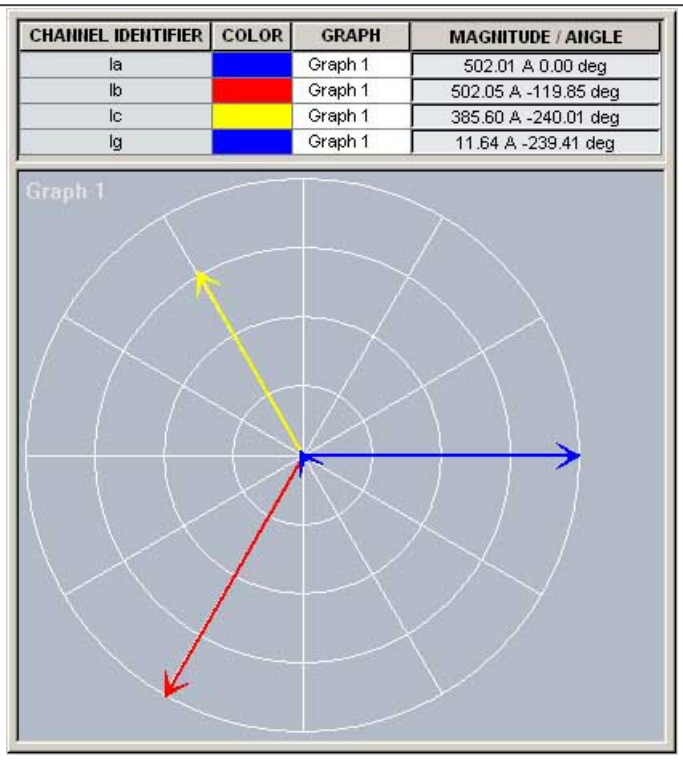

Figure 81: Vector graph

3.4.9 PROTECTION SUMMARY

Protection Summary is a single screen which holds the summarized information of different settings from Grouped Elements and Monitoring Elements.

The Protection Summary Screen allows the user to:

- view the output relay assignments for the elements
- modify the output relay assignments for the elements
- view the Function status for the elements
- navigate to the respective element screen on a button click.

With EnerVista D&I Setup software running and communications established, select the ***Setpoints*** > ***Protection Summary*** menu item to open the Protection Summary window.

3.4.10 FLEXLOGIC FAVOURITES

With EnerVista D&I Setup software version 2.70 and above, use the FlexLogic Favourites to create a customized list of FlexLogic operands that use Format Code FC142.

Select **Edit FlexLogic Favourites** from either the offline menu or the popup menu from an offline CID file to access a screen where the FlexLogic Favourite list can be modified. The FlexLogic Favourites screen includes a left tree that shows all the FlexLogic Operands available for the CID file. The right tree shows all the FlexLogic operands included in the Favourites list.

In the FlexLogic Favourites screen, press the **Smart Update** button to examine the CID file. Any FlexLogic operands associated with an enabled feature/element will be added to the FlexLogic Favourites list. Operands will never be automatically removed from the Favourites list, but can be removed manually by selecting the operand and pressing the **<<** button. Operands can also be added to the Favourites list by selecting the operands in the left tree and pressing the **>>** button.

Select the check-box to use FlexLogic Favourites in any screen with a setting that is configured using the FlexLogic operand (FC142).

FlexLogic Favourites is enabled when the settings are shown in **BOLD** and the background color of the setting is brighter.

3.4.11 OFFLINE SETTINGS FILE CONVERSION

EnerVista D&I Setup software supports conversion of offline settings files created in the SR Series platform. This feature allows the conversion of existing offline setting files to 8 Series files.

EnerVista D&I Setup software reduces the manual effort required when moving from an older product to a newer product. The settings file conversion feature takes an existing settings file and generates a new settings file compatible with the relay specified with the order code. After the import is complete, the results are displayed in an interactive results window.

3.4.11.1 CONVERTING LEGACY FILES

EnerVista D&I Setup software supports conversion of SR 750/760 files to 8-series settings files.

The conversion can only be initialized from the Offline/New Settings File commands located in the taskbar, as follows:

1. In the menu taskbar, click on **Offline** and select the **New Settings File** item. The **Create New Settings File** dialog box appears, which allows for the setpoint file conversion.
2. Select the Firmware Version and Order Code option for the new setpoint file.
3. For future reference, enter some useful information in the **Description** box to identify the device and purpose for the file.
4. To select the file name and path for the new file, click the button beside the **File Name** box.
5. To select the SR settings file used for initialization, check the box to the left of **Initialize Settings from SR Settings File**.
6. To locate and select the file to convert, click the ellipsis button beside the **Initialize Settings** from **SR Settings File** box.
7. Click **OK** to begin the conversion and complete the process. Once this step is completed, the new file, with a complete path, is added to the software environment.

Note:
EnerVista D&I Setup software version 1.2x and above supports the conversion of all 750/760 files as long as they are from a 32-bit PC. If the file is 16-bit, it must be converted to 32-bit using the latest 750/760 EnerVista D&I Setup software Setup before doing the conversion.

> *Note:*
> *If there are settings that are not applicable to the later model, they are ignored and will not appear in the settings list.*

3.4.11.2 CONVERSION SUMMARY REPORT

At the end of the conversion process, the results are summarized in a Settings Conversion Report.

The report is found under Device Definition in the offline file window.

> *Note:*
> *Print the Settings Conversion Report immediately following conversion for future reference in case the report is removed or the settings are modified from the EnerVista D&I Setup software.*

3.4.11.3 RESULTS WINDOW

The conversion summary results window has the following columns:

- **SettingName**: the same tree structure as in the offline window, but with status icons
- **SettingValue**: the converted value for the settings file
- **Original SettingName**: setting name of the input file
- **Original SettingValue**: setting value of the input file

> *Note:*
> *All other settings available (not shown in the conversion report) in the file are set to default and must be verified before putting the relay into service.*
> *Settings in the results window are linked to setting screens. Click in the results window to navigate to the corresponding settings window.*

Status Icons

The status icons show the conversion results:

Manual configuration required

Successful conversion

Value is not supported

Print Report

If desired, the conversion summary report can be printed using the File/Print command in the taskbar or it can be printed from the **GUI** print button.

> *Note:*
> *Even if the report shows that a conversion has been successful (green checkbox icon), all settings must still be verified before putting the relay in service.*

CHAPTER 4

CYBERSECURITY

4.1 OVERVIEW

In the past, substation networks were traditionally isolated and the protocols and data formats used to transfer information between devices were often proprietary.

For these reasons, the substation environment was very secure against cyber-attacks. The terms used for this inherent type of security are:

- Security by isolation (if the substation network is not connected to the outside world, it cannot be accessed from the outside world).
- Security by obscurity (if the formats and protocols are proprietary, it is very difficult to interpret them).

The increasing sophistication of protection schemes, coupled with the advancement of technology and the desire for vendor interoperability, has resulted in standardisation of networks and data interchange within substations. Today, devices within substations use standardised protocols for communication. Furthermore, substations can be interconnected with open networks, such as the internet or corporate-wide networks, which use standardised protocols for communication. This introduces a major security risk making the grid vulnerable to cyber-attacks, which could in turn lead to major electrical outages.

Clearly, there is now a need to secure communication and equipment within substation environments. This chapter describes the security measures that have been put in place for our range of Intelligent Electronic Devices (IEDs).

Note:
Cybersecurity compatible devices do not enforce NERC compliance, they merely facilitate it. It is the responsibility of the user to ensure that compliance is adhered to as and when necessary.

This chapter contains the following sections:

Overview 127

The Need for Cybersecurity 128

Standards 129

Cybersecurity Implementation 137

RBAC User Management Cybersecurity Configuration Tool 151

4.2 THE NEED FOR CYBERSECURITY

Cybersecurity provides protection against unauthorised disclosure, transfer, modification, or destruction of information or information systems, whether accidental or intentional. To achieve this, there are several security requirements:

- Confidentiality (preventing unauthorised access to information)
- Integrity (preventing unauthorised modification)
- Availability/Authentication (preventing the denial of service and assuring authorised access to information)
- Non-repudiation (preventing the denial of an action that took place)
- Traceability/Detection (monitoring and logging of activity to detect intrusion and analyse incidents)

The threats to Cybersecurity may be unintentional (e.g. natural disasters, human error), or intentional (e.g. cyber-attacks by hackers).

Good Cybersecurity can be achieved with a range of measures, such as closing down vulnerability loopholes, implementing adequate security processes and procedures and providing technology to help achieve this.

Examples of vulnerabilities are:

- Indiscretions by personnel (users keep passwords on their computer)
- Bad practice (users do not change default passwords, or everyone uses the same password to access all substation equipment)
- Bypassing of controls (users turn off security measures)
- Inadequate technology (substation is not firewalled)

Examples of availability issues are:

- Equipment overload, resulting in reduced or no performance
- Expiry of a certificate preventing access to equipment

To help tackle these issues, standards organisations have produced various standards. Compliance with these standards significantly reduces the threats associated with lack of Cybersecurity.

4.3 STANDARDS

There are several standards, which apply to substation Cybersecurity. The standards currently applicable to GE Vernova's IED's are NERC and IEEE1686.

Standard	Country	Description
NERC CIP (North American Electric Reliability Corporation)	USA	Framework for the protection of the grid critical Cyber Assets
BDEW (German Association of Energy and Water Industries)	Germany	Requirements for Secure Control and Telecommunication Systems
ANSI ISA 99	USA	ICS oriented then Relevant for EPU completing existing standard and identifying new topics such as patch management
IEEE 1686	International	International Standard for substation IED Cybersecurity capabilities
IEC 62351	International	Power system data and Comm. protocol
ISO/IEC 27002	International	Framework for the protection of the grid critical Cyber Assets
NIST SP800-53 (National Institute of Standards and Technology)	USA	Complete framework for SCADA SP800-82and ICS Cybersecurity
CPNI Guidelines (Centre for the Protection of National Infrastructure)	UK	Clear and valuable good practices for Process Control and SCADA security

4.3.1 NERC COMPLIANCE

The North American Electric Reliability Corporation (NERC) created a set of standards for the protection of critical infrastructure. These are known as the CIP standards (Critical Infrastructure Protection). These were introduced to ensure the protection of 'Critical Cyber Assets', which control or have an influence on the reliability of North America’s electricity generation and distribution systems.

These standards have been compulsory in the USA for several years now. Compliance auditing started in June 2007, and utilities face extremely heavy fines for non-compliance.

NERC CIP standards

CIP Standard	Description
CIP-002-1 Critical Cyber Assets	Define and document the Critical Assets and the Critical Cyber Assets
CIP-003-1 Security Management Controls	Define and document the Security Management Controls required to protect the Critical Cyber Assets
CIP-004-1 Personnel and Training	Define and Document Personnel handling and training required protecting Critical Cyber Assets
CIP-005-1 Electronic Security	Define and document logical security perimeters where Critical Cyber Assets reside. Define and document measures to control access points and monitor electronic access
CIP-006-1 Physical Security	Define and document Physical Security Perimeters within which Critical Cyber Assets reside
CIP-007-1 Systems Security Management	Define and document system test procedures, account and password management, security patch management, system vulnerability, system logging, change control and configuration required for all Critical Cyber Assets
CIP-008-1 Incident Reporting and Response Planning	Define and document procedures necessary when Cybersecurity Incidents relating to Critical Cyber Assets are identified

CIP Standard	Description
CIP-009-1 Recovery Plans	Define and document Recovery plans for Critical Cyber Assets

4.3.1.1 CIP 002

CIP 002 concerns itself with the identification of:

- Critical assets, such as overhead lines and transformers
- Critical cyber assets, such as IEDs that use routable protocols to communicate outside or inside the Electronic Security Perimeter; or are accessible by dial-up

Power Utility Responsibilities	GE Vernova's Contribution
Create the list of the assets	We can help the power utilities to create this asset register automatically. We can provide audits to list the Cyber assets

4.3.1.2 CIP 003

CIP 003 requires the implementation of a Cybersecurity policy, with associated documentation, which demonstrates the management's commitment and ability to secure its Critical Cyber Assets.

The standard also requires change control practices whereby all entity or vendor-related changes to hardware and software components are documented and maintained.

Power Utility Responsibilities	GE Vernova's Contribution
To create a Cybersecurity policy	We can help the power utilities to have access control to its critical assets by providing centralized Access control. We can help the customer with its change control by providing a section in the documentation where it describes changes affecting the hardware and software.

4.3.1.3 CIP 004

CIP 004 requires that personnel with authorized cyber access or authorized physical access to Critical Cyber Assets, (including contractors and service vendors), have an appropriate level of training.

Power Utility Responsibilities	GE Vernova's Contribution
To provide appropriate training of its personnel	We can provide Cybersecurity training

4.3.1.4 CIP 005

CIP 005 requires the establishment of an Electronic Security Perimeter (ESP), which provides:

- The disabling of ports and services that are not required
- Permanent monitoring and access to logs (24x7x365)
- Vulnerability Assessments (yearly at a minimum)
- Documentation of Network Changes

Power Utility Responsibilities	GE Vernova's Contribution
To monitor access to the ESP To perform the vulnerability assessments To document network changes	To disable all ports not used in the IED To monitor and record all access to the IED

4.3.1.5 CIP 006

CIP 006 states that Physical Security controls, providing perimeter monitoring and logging along with robust access controls, must be implemented and documented. All cyber assets used for Physical Security are considered critical and should be treated as such:

Power Utility Responsibilities	GE Vernova's Contribution
Provide physical security controls and perimeter monitoring Ensure that people who have access to critical cyber assets don't have criminal records	GE Vernova cannot provide additional help with this aspect

4.3.1.6 CIP 007

CIP 007 covers the following points:

- Test procedures
- Ports and services
- Security patch management
- Antivirus
- Account management
- Monitoring
- An annual vulnerability assessment should be performed

Power Utility Responsibilities	GE Vernova's Contribution
To provide an incident response team and have appropriate processes in place	Test procedures, we can provide advice and help on testing Ports and services, our devices can disable unused ports and services Security patch management, we can provide assistance Antivirus, we can provide advise and assistance Account management, we can provide advice and assistance Monitoring, our equipment monitors and logs access

4.3.1.7 CIP 008

CIP 008 requires that an incident response plan be developed, including the definition of an incident response team, their responsibilities and associated procedures.

Power Utility Responsibilities	GE Vernova's Contribution
To provide an incident response team and have appropriate processes in place.	GE Vernova cannot provide additional help with this aspect.

4.3.1.8 CIP 009

CIP 009 states that a disaster recovery plan should be created and tested with annual drills.

Power Utility Responsibilities	GE Vernova's Contribution
To implement a recovery plan	To provide guidelines on recovery plans and backup/restore documentation

4.3.2 IEEE 1686-2013

IEEE 1686-2013 is an IEEE Standard for substation IEDs' Cybersecurity capabilities. It proposes practical and achievable mechanisms to achieve secure operations.

The following features described in this standard apply:

- Passwords are 8 characters long and can contain upper-case, lower-case, numeric and special characters.
- Passwords are never displayed or transmitted to a user.
- IED functions and features are assigned to different password levels. The assignment is fixed.
- The audit trail is recorded, listing events in the order in which they occur, held in a circular buffer.
- Records contain all defined fields from the standard and record all defined function event types where the function is supported.
- No password defeat mechanism exists. Instead a secure recovery password scheme is implemented.
- Unused ports (physical and logical) may be disabled.

4.3.3 IEC 62351

IEC 62351 is a standard developed for handling the security of IEC TC 57 series of protocols including IEC 60870-

5 series, IEC 60870-6 series, IEC 61850 series, IEC 61970 series & IEC 61968 series. The different security objectives include authentication of data transfer through digital signatures, ensuring only authenticated access, prevention of eavesdropping, prevention of playback and spoofing, and intrusion detection.

The Roles described in chapter 62351-8 apply. The table below shows predefined roles, IDs and permissions assignment according to it:

VALUE	ROLE NAME (REVISION =1)	PERMISSION									
		LISTOBJECTS	READVALUES (READ)	DATASET	REPORTING	FILEREAD	FILEMNGT	CONTROL	CONFIG	SETTINGGROUP	SECURITY
<0>	VIEWER	x	C	x	C_1						
<1>	OPERATOR	x	x	x	C_1			x		x	
<2>	ENGINEER	x	x	x	X_1	X_1	X_1		x	x	
<3>	INSTALLER	x	x	x	X_2	X_2			x	x	
<4>	SECADM	x	x		X_4	X_4	X_4		x		x
<5>	SECAUD	x	x	x	X_1						
<6>	RBACMNT	x	x				X_4		x		
<7> (*1)	ADMINISTRATOR	x	x	x	x	x	x	x	x	x	x
<7, …, 32767>	RESERVED	For future use of IEC defined roles.									
<-32768, …, -1>	PRIVATE	Defined by external agreement. Not guaranteed to be interoperable.									

VALUE	ROLE NAME (REVISION =1)	PERMISSION									
		LISTOBJECTS	READVALUES (READ)	DATASET	REPORTING	FILEREAD	FILEMNGT	CONTROL	CONFIG	SETTINGGROUP	SECURITY

C = Conditional read access, clarification of specific data objects might be necessary (e.g., VIEWER may not access security settings, but process values)

C_1 = Conditional read access to files or filetype data

X_1 = Access to files of type data and config

X_2 = Access to files of type config and firmware (updates)

X_3 = Access to files of type audit log

X_4 = Access to files of type security (config)

(*1) ADMINISTRATOR is a LEGACY predefined role containing full permissions assignation. The ADMINISTRATOR is a pre-configured role using the <7> first available IEC RESERVED role. The role ID value is configurable in EnerVista for all roles (but the first 6 currently fixed by the standard), so the user can change the ID to another value if needed (from 7 till 32767 and from -1 till -32768).

Permissions Definition

As there is not enough granularity in the permissions to accomplish all the filters and assignments to the different roles, some new permissions have been added to the ones predefined by the standard, e.g. to differentiate the FILEMNGM, the FW Upgrade, etc.

Below is the list of permissions implemented:

Permission ID	Name	Comment
1	LISTOBJECTS	View settings names/traverse settings (except security settings)
2	READVALUES	View non security settings values, view PSL, view 61850
3	DATASET	Configure and edit 61850
4	REPORTING	View status, metering
5	FILEREAD	Read configuration file, read events reports, read waveforms reports, read fault reports, read disturbance records
6	FILEWRITE	Write configuration file, create/edit configuration project, import SCL
7	FILEMNGT	Clear records, restore defaults, export SCL, delete configuration project
8	CONTROL	Command Breaker, Reset
9	CONFIG	View non security settings, edit/configure all non-security settings, configure and Edit 61850, save settings
10	SETTINGGROUP	View non security settings, modify group control settings
11	SECURITY	View and modify security settings view, configure security, modify users and rbac
12 (*)	FILEREAD_SEC	Read sec audit log
13 (*)	FILEMNGT_SEC	Access to files of type security (config)
14 (*)	FWUPGRADE	Firmware upgrade

Note:
(*) ID's 1 to 11 are the set of permissions predefined by the standard, available for all device firmware releases.
ID's 12 to 14 are new customized permissions added, available from 08A release on.

With this permissions definition the roles are defined as follow:

Legacy Roles (Basic Security)

ID	Role	Permissions
0	VIEWER	1, 2, 4, 5
1	ADMINISTRATOR	1, 2, 3, 4, 5, 6, 7, 8, 9, 10, 11, 12, 13, 14
2	ENGINEER	1, 2, 3, 4, 5, 6, 7, 8, 9, 10
3	OPERATOR	1, 2, 4, 5, 8, 10

Standard Roles (Advanced Security):

ID	Role	Permissions
0 (*1)	VIEWER	1, 2, 4, 5
1 (*1)	OPERATOR	1, 2, 4, 5, 8, 10
2 (*1)	ENGINEER	1, 2, 3, 4, 5, 6, 7, 9, 10
3 (*1)	INSTALLER	1, 2, 4, 5, 6, 9, 10, 14
4 (*1)	SECADM	1, 2, 3, 5, 6, 9, 11, 13
5 (*1)	SECAUD	1, 2, 4, 12
6 (*1)	RBACMNT	1, 2, 9, 13
7 (*2)	ADMINISTRATOR	1, 2, 3, 4, 5, 6, 7, 8, 9, 10, 11, 12, 13, 14

Note:
*(*1) Role defined by the standard.*

Note:
*(*2) ADMINISTRATOR is a predefined role containing full permissions assignation. The ADMINISTRATOR role is pre-configured using the <7> first available IEC RESERVED role.*

There are two Cybersecurity options available in the Cortec.

Basic Security where there are 4 fixed roles/users: Administrator, Engineer, Operator and Viewer.

Administrator: Has all the permissions to perform a firmware upgrade, change of parameters, change of security settings, CID read/write, read data files, issue commands, and read all the values from the device.

Engineer: Change of parameters, CID read/write, read data files, issue commands, and read values from the device.

Operator: Issue commands and read values of the device.

Viewer: This user can only read values from the device.

In Advanced Security the device has up to 20 configurable users. Each user will have a configurable username and password, and it could select one role from the standard and new user defined roles. As stated in the standard, there is the possibility to redefine new roles, adjusting the name, ID and permissions for each new defined role. There is no possibility of role combination.

For more detailed information of users and rights/permission definition see the list below:

User/Role Definition:

VIEWER (*1): Can view what objects are present within a Logical-Device by presenting the type ID of those objects.

OPERATOR (*1): An operator can view what objects and values are present within a Logical Device by presenting the type ID of those objects as well as perform control actions.

ENGINEER (*1): An engineer can view what objects and values are present within a Logical Device by presenting the type ID of those objects. Moreover, an engineer has full access to DateSets and Files and can configure the server locally or remotely.

INSTALLER (*2): An installer can view what objects and values are present within a Logical Device by presenting the type ID of those objects. Moreover, an installer can write files and can configure the server locally or remotely.

SECADM (*2): Security administrator can change subject-to-role assignments (outside the device) and role-to-right assignment (inside the device) and validity periods; change security setting such as certificates for subject authentication and access token verification.

SECAUD (*2): Security auditor can view audit logs.

RBACMNT (*2): RBAC management can change role-to-right assignment.

ADMINISTRATOR (*1): Has All read/write access.

RESERVED (*2): This user/role can be defined by the user adjusting name, ID and permissions for each new defining role.

Note:
*(*1) Roles applying to both Basic and Advanced Cybersecurity.*

Note:
*(*2) Roles only applying to Advanced Cybersecurity.*

Rights/Permissions Definition:

- **VIEW/LISTOBJECTS (*1)**: Allows the subject/role to discover what objects are present within a Logical Device by presenting the type ID of those objects.
- **READ/READVALUES (*1)**: Allows the subject/role to obtain all or some of the values in addition to the type and ID of objects that are present within a Logical-Device.
- **DATASET (*1)**: Allows the subject/role to have full management rights for both permanent and non-permanent DataSets.
- **REPORTING (*1)**: Allows a subject/role to use buffered reporting as well as un-buffered reporting.
- **FILEREAD (*1)**: Allows the subject/role to have read rights for file objects.
- **FILEWRITE (*1)**: Allows the subject/role to have write rights for file objects. This right includes the FILEREAD right.
- **FILEMNGT (*1)**: Allows the role to transfer files to the Logical-Device, as well as delete existing files on the Logical- Device.
- **CONTROL (*1)**: Allows a subject to perform control operations.
- **CONFIG (*1):** Allows a subject to locally or remotely configure certain aspects of the server.
- **SETTINGGROUP (*1)**: Allows a subject to remotely configure Settings Groups.

- **SECURITY (*1)**: Allows a subject/role to perform security functions at both a Server/Service Access Point and Logical-Device basis.
- **FILEREAD_SEC (*2)**: Allows a subject/role to read sec audit log.
- **FILEMNGT_SEC (*2)**: Allows a subject/role to access to files of type security (config).
- **FWUPGRADE (*2)**: Allows a subject/role to perform firmware upgrade.

Note:
*(*1) Standard defined permissions. Available for all device firmware releases.*

Note:
*(*2) New customized permissions added. Available from 08A release on.*

4.4 CYBERSECURITY IMPLEMENTATION

GE Vernova's products have always been and will continue to be equipped with state-of-the-art security measures. Due to the ever-evolving communication technology and new threats to security, this requirement is not static. Hardware and software security measures are continuously being developed and implemented to mitigate the associated threats and risks.

This section describes the current implementation of Cybersecurity. The bulk of the implementation consists of RBAC (Role Based Access Control) Cybersecurity mode, Centralised Authentication, Remote Logging and System Hardening. The features are compliant with NERC-CIPv6 and IEEE 1686. This is valid for the release of platform software to which this manual pertains.

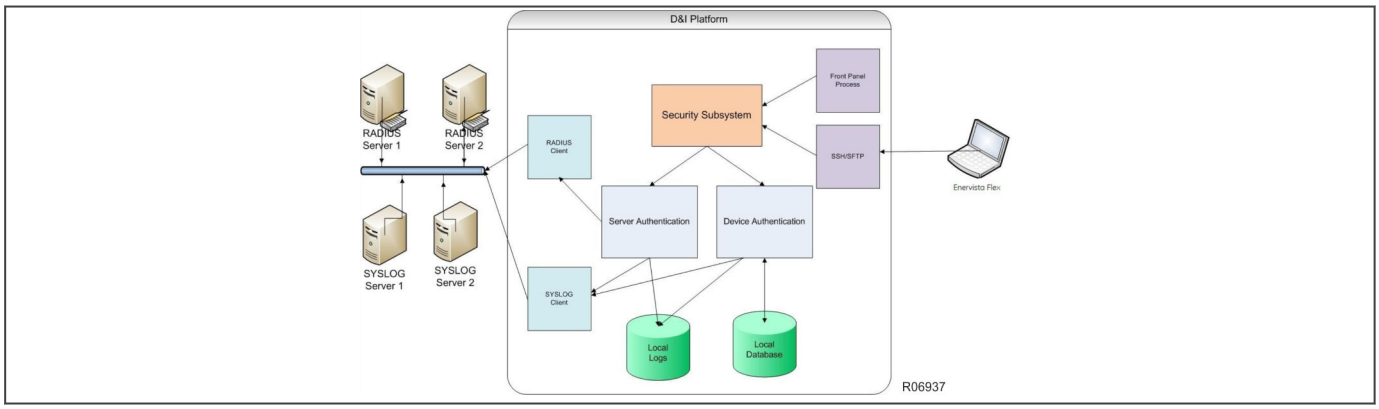

Figure 82: Cybersecurity implementation

Two levels of Cybersecurity are available:

- Basic Cybersecurity
- Advanced Cybersecurity

Basic Cybersecurity includes the following security features:

- Device/Local Authentication
- Four-level access: Fixed local users and roles (Administrator, Engineer, Operator, Viewer)
- ByPass Access
- Password complexity
- Disabling of unused physical and logical ports
- Flag for Failed authentication
- User lockout for configurable period
- Inactivity time out

Advanced security includes additional security features as follows:

- Remote/Server Authentication (supports RADIUS and Legacy LDAP)
- Local authentication with up to 20 configurable users, with configurable roles, username and passwords
- Secure encrypted communication (Modbus/SSH, SFTP)
- Syslog
- Increased product hardening

4.4.1 RBAC FUNCTIONALITY

Role based access control, RBAC, is the core of session management. Every login attempt will connect to the RBAC service and it will allow or deny the login of the user.

In Basic Security, default connection is done as Viewer, without password requirement.

In case of Advanced Security, a username and password will be required. If the login is successful, the access level will correspond to the role defined to this user.

The user cannot change its own role. So, in case of more rights needed, another different user with the corresponding role should be logged in.

The maximum number of concurrent sessions is only one for all roles, except of Viewer role, which has the limit of 5 sessions.

There is a session timeout adjustable by settings. This timeout means that open sessions are automatically closed if they remain inactive till the timer elapses. This inactivity timer defines the period that IED waits in idleness before a logged in user will be automatically logged out. This timeout is different for HMI interface and other interfaces (Serial, Ethernet, etc).

There is a lockout period adjustable by settings. For each account, when a maximum number of failed login attempts is reached, it is locked during the specified period. It doesn't matter the interface the login comes from. The account will be unlocked at the first successful login passed the lockout period.

If the Authentication Method setting is changed, the logged in user will be forced to logout.

4.4.2 BASIC SECURITY IMPLEMENTATION

4.4.2.1 DEVICE/LOCAL AUTHENTICATION

In Device Authentication mode, IED provide local RBAC Server security. The IED supports unique device usernames, and stores device passwords securely. For password encryption, PBKDF2 with SHA256 and a unique 64bits salt per user is used.

Only Administrator can change other user's passwords. All device users can change their own passwords. For password reset/recovery procedure the Administrator role will be required.

Viewer access level has no password associated and is the default connection to the device. Default password for Administrator, Engineer and Operator access levels is 0.

4.4.2.2 FOUR-LEVEL ACCESS

Basic IED Security supports 4 fixed roles: Administrator, Engineer, Operator and Viewer. The fixed local usernames match with these roles.

All the roles are password protected except the Viewer. A Viewer connection is directly logged in without entering a password using front panel or any communication port.

The different features of each role or access level are shown in the table below, for Basic Security (Legacy):

Feature		Administrator	Engineer	Operator	Viewer
Settings	Security settings	RW	R	R	R
	Change own PW	Yes	Yes	Yes	X
	Change own PW (Advanced security)	Yes	Yes	Yes	Yes
	Create New/Modify users, assign roles (advanced security OC)	RW	X	X	X
	Non-Security settings	RW	RW	R	R
	FlexLogic	RW	RW	R	R
	IEC 61850 settings	RW	RW	R	R
	Factory Settings	X	X	X	X
Commands	Date change	RW	RW	X	X
	BKR related	RW	RW	RW	X
	Clear records	RW	X	X	X
	Restore Defaults	RW	X	X	X
	RESET	W	W	W	X
File	Config File read	R	R	R	R
	Config File write	W	W	X	X
Firmware Upgrade		W	X	X	X
Upload FW		W	X	X	X
Actual Values	Status	R	R	R	R
	Metering	R	R	R	R
Reports	Events	R	R	R	R
	Waveforms	R	R	R	R
	Security Audit log	R	R	X	X

4.4.2.3 BYPASS ACCESS

This feature allows security authentication to be bypassed. Once this setting is anything other than `Disabled`, the user gets Administrator access rights on the configured interface for the period of time when the ***SETPOINT ACCESS*** setting is `On`. For example, if user configures ***BYPASS ACCESS*** as `Local`, then no user authentication is needed to access the device over USB or HMI when ***SETPOINT ACCESS*** is `On`. Another option is to configure ***BYPASS ACCESS*** as `HMI only` - enabling the user to view and modify all settings, view actual values or execute commands. The use of this feature should be restricted only in commissioning phase or when it is considered safe.

4.4.2.4 ENHANCED PASSWORD SECURITY

When Password complexity setpoint is set to 'Enabled", it allows user to configure password strings which adhere to complexity rules defined below. When the setting is configured as 'Disabled" then user can change the password to any string with max length of 20 characters.

Password complexity has the following features:

- Passwords cannot contain the user's account name or parts of the user's full name that exceed two consecutive characters.
- Must be at least 8 characters in length. Max length can be 20 ASCII char
- Passwords must contain characters from all four categories:
  - English uppercase characters (A through Z).
  - English lowercase characters (a through z).
  - Numeric: Base 10 digits (0 through 9).
  - Special non-alphanumeric (such as @,!,#,{, but not limited to only those, etc.)

The IED supports encryption for passwords. The encryption algorithm used is PBKDF2 with SHA256 and a unique 64bits salt per user, where this salt is generated randomly.

4.4.2.5 DISABLING PHYSICAL AND LOGICAL PORTS

To secure your system it is advised to harden the product (product hardening) by disabling the unused protocols and physical ports. This is the simplest method to ensure lesser security risk. The IED offers possibility to enable or disable protocols / ports based on the usage.

The IED supports the ability to turn off any of the following specific physical ports:

- front USB serial port
- rear port RS485
- Ethernet port

The IED supports the ability to turn off any of the following specific communication protocols:

- IEC 61850 (MMS and GOOSE)
- Modbus RTU
- Modbus TCP
- DNP3oE
- DNP3 Serial
- IEC 60870-5-103
- TFTP

Time synchronization protocols can be selectively enabled/disabled based on the configuration.

- IRIG-B
- SNTP

Services	Port Type	Port Numbers
Modbus TCP	TCP	502
DNP3oE	TCP	20000
	UDP	20000
IEC 61850 (MMS)	TCP	102
TFTP	UDP	69

Services	Port Type	Port Numbers
SFTP (SSH)	TCP	22

Note:
For data protocols, service availability and detailed information, refer to the Communication Interfaces section in the Communications chapter.

4.4.2.6 NON-ENCRYPTED/CLEAR TEXT MODBUS

Due to customers' requests to use 'plain' or 'non-encrypted' Modbus communication with SCADA applications for certain scenarios, the Modbus TCP setting under the ***DEVICE\COMMUNICATIONS\MODBUS*** path supports the following options:

Disabled: when the ***Modbus TCP*** setting is set to Disabled, the port 502 will be closed.

Enabled: when the ***Modbus TCP*** setting is set to Enabled, the legitimate user can read or write over plain Modbus using port 502 on successful authentication.

Read-Only (*): when the ***Modbus TCP*** setting is set to Read-Only, the legitimate user can only read over plain Modbus using port 502.

By default, the ***Modbus TCP*** Setting is set to Enabled.

User with 'Administrator' role can configure this setting. Once the setting is configured to other than Disabled, the IED will allow communication with a 3rd party SCADA application in plain text Modbus over port 502. Also, for configuration change, the relay will register a security event to identify the user.

Note:
EnerVista Configuration software will always communicate with the IED over SSH using port 22.

Note:
(*) Read-Only option only available for Basic Cybersecurity Cortec options. Advanced Cybersecurity will have just Disabled and Enabled options.

4.4.2.7 SECURITY EVENTS

Security Events can be displayed in EnerVista Configuration software at RECORDS\SECURITY EVENTS path.

'securelog.csv' file stores security events information. A total of minimum 1024 events are stored in a circular buffer in non-volatile memory. Once the file reaches its max limit, oldest event Will get over-written by newest security event.

The security events information supported & stored in events file for each event contains: Priority, Version, Timestamp, Host, Process Name, Message Id, IEC@41912 ID, Text and UsrID.

The timestamp is the UTC time.

This file will be stored on the IED and will be accessible from EnerVista Configuration software for user with "Administrator" role. For Basic security, this is the only file to give security audit information to user. And this file will be useful for advanced security user if in case syslog is not configured or non-functional due to some issue.

Note:
For 4.20 firmware release, the security events can be visualized at RECORDS\SECURITY EVENTS path. Security Events files (securelog) are available for download, in "csv" and "txt" format, from the Service Report zip file that can be downloaded from the Online Window of the EnerVista Configuration software, clicking on the last icon from the right, called "Service Report".

4.4.3 ADVANCED CYBERSECURITY IMPLEMENTATION

In advanced cybersecurity device authentication, all users: Viewer, Administrator, Engineer and Operator, need to enter username as well as password to get access privileges. Default advanced cybersecurity password is ChangeMe1#.

For early firmware releases: The Advance Cybersecurity was built on top of Basic Cybersecurity, providing Basic Cybersecurity options plus extra properties for Advance Cybersecurity that were not available in Basic Cybersecurity.

For later firmware releases: Basic Cybersecurity is a legacy implementation. Advance Cybersecurity is a separate Cybersecurity implementation fully configurable following the IEC 62351-8 standard.

4.4.3.1 PERMISSIONS VS ACCESS MATRIX/PERMISSION ASSIGNMENT

In Basic (legacy) security the access is managed with a matrix table based on roles (see Four-level Access in Basic Security Implementation section).

In Advanced Security the access is managed through permission set. The following table shows the different features managed by EnerVista Configuration software, and the permissions that the user shall have in order to write or read values in the different screens:

Feature		Write Permissions ID	Read Permission ID
Settings	Security settings	11+13	11+13
	Change own PW	Current User	N.A.
	Change all PW	13	13
	Create new/modify users, assign roles (advanced security)	13	13
	Non-security settings	9	2
	Flexlogic	9	2
	IEC 61850 settings	3	2
	Settings group	10	2
Commands	Data change	9	N.A.
	BKR related	8	N.A.
	Clear records	7	N.A.
	Restore defaults	7	N.A.
	RESET	8	N.A.
File Operations	Config file	6	5
Firmware Upgrade	Firmware upgrade	14	N.A.
Actual Values	Status	N.A.	2
	Metering	N.A.	2
Reports	Events	N.A.	5
	Waveforms	N.A.	5
	Security audit logs	N.A.	12

Note:
For permissions definition see Permission Definition table in IEC 62351 section.

4.4.3.2 SERVER/REMOTE AUTHENTICATION

The Server/Remote Authentication implementation varies between earlier releases and later releases.

For early firmware releases: The Server Authentication Mode **uses only RADIUS**.

Where the following RADIUS servers can be set as customer's central authentication server:

- FreeRADIUS server
- Microsoft NPS server
- RSA Authentication Manager

And where the RADIUS implementation supports the following authentication protocols:

- PEAPv0 with inner authentication method MS-CHAPv2 (To support Microsoft NPS server)
- EAP-TTLS with inner authentication method PAP (To support RSA AM)
- EAP with inner authentication method GTC (To support RSA AM)
- PAP (unsecured, to support any RADIUS server)

For later firmware releases 4.20: The Server Authentication Mode can use either **RADIUS** or **LDAP** where:

RADIUS:

Servers used as a central authentication server can be:

- FreeRADIUS server
- RSA Authentication Manager

Implementation supports the authentication protocols:

- PEAPv0 with inner authentication method MS-CHAPv2
- EAP-TTLS with inner authentication method PAP (To support RSA AM)
- PAP (unsecured, to support any RADIUS server)

LDAP:

Servers used as a central authentication server can be:

- Microsoft Active Directory server
- OpenLDAP

Implementation supports the authentication protocols:

- TCP
- STARTTLS

4.4.3.3 SERVER/REMOTE AUTHENTICATION (RADIUS)

In Server Authentication mode, the IED authenticates the user using RADIUS server. RADIUS client resides in the product and connects to the RADIUS server.

Customer can use any of the following RADIUS servers as their central authentication server

- FreeRADIUS server
- RSA Authentication Manager

RADIUS users and passwords are created in the server (in the Active Directory). Each RADIUS user should have a password (that meets the password policy of the Active Directory) and specific role assigned to in the Active Directory.

The relay supports 2 servers in the configuration for redundancy. The IED will try each in sequence until one respond. When the first RADIUS server is unavailable, the next server in the list is tried for RADIUS Authentication.

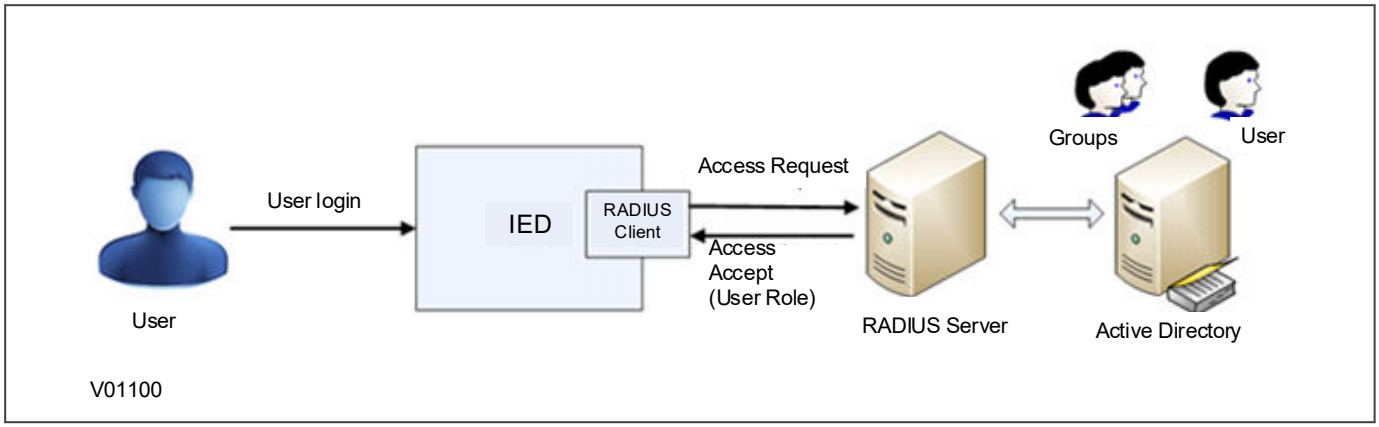

Figure 83: RADIUS server/client communication

The IED will first try the server 1 up to the configured number of retries leaving request timeout between each request. After this point, if it still does not have a valid answer from server 1, it switches to server 2 and repeats for up to the number of configured retries again. If it maxes out on retries on the second server, it gives up entirely on Server Authentication and fallback to device authentication (Only if Authentication Method Server and Device is selected). A "RADIUS Server unavailable" security event is also logged under this condition.

IED will authenticate and authorize RADIUS users using the following authentication stack:

- Primary Radius if enabled (stop on invalid credential failure, continue all other failures)
- Secondary Radius if enabled (stop on invalid credential failure, continue all other failures) The RADIUS implementation supports the following authentication protocols:
- PEAPv0 with inner authentication method MS-CHAPv2 (To support Microsoft NPS server)
- EAP-TTLS with inner authentication method PAP (To support RSA AM)
- PAP (unsecured, to support any RADIUS server)

The RADIUS implementation will query the Role ID vendor attribute and establish the logged in user security context with that role.

In case of Server Authentication mode but if the RADIUS server is not operational, IED will try Device Authentication.

> *Note:*
> *For release 8A and later, the default security settings are different to releases 6A and prior, (e.g., RADIUS Port Prim and Sec settings in 8A release are 2083, whereas in 6A they are 1812). Check the 8A default values set in your device and update them to the value needed for your security configuration.*

-

4.4.3.4 SERVER/REMOTE AUTHENTICATION (LEGACY LDAP PULL MODEL)

The relay supports Legacy LDAP Pull Model. The PULL model with LDAP is explained in the IEC 62351-8 section.

In legacy projects will an LDAP repository (e.g., Windows Active Directory), RBAC information is limited to roles, and they are returned in a simple LDAP response after successful authentication of the user. The relay implements this legacy usage of LDAP.

RBAC and Legacy LDAP

In the RBAC model, users are assigned to roles through which they acquire permissions. A mapping between these generic permissions and device-specific actions is used to determine if a user has the right to perform a given action on a resource (object).

The RBAC data that changes more frequently is stored outside the device in an idendity provider repositoy which is the LDAP server in this case. This data includes user credentials, roles and associations between users and roles.

The table below explains the RBAC data versus LDAP data representation:

RBAC Data	LDAP Data
subject (user)	user
password	password
role	group
role-user association	membership (of a user in a group)

Communication Protocols

The implementation of LDAP supports two protocols: TCP and TCP over TLS, and For TCP over TLS supports STARTTLS.

TLSv 1.2 and above are supported. TLS versions below 1.2 are not supported.

LDAP Query and Access Token

For an already authenticated user, LDAP returns a token containing IEC 62351-8 groups that the user is a member of upon request (LDAP search request).

For better performance (faster queries) and to forge the correct LDAP query, the following input is required:

- **users OU**: The organizational unit where users reside. It is assumed that even in an existing LDAP server like Active Directory with a large number of users, users all reside in the same organizational unit.
- **roles OU**: The organizational unit where groups reside. Again, it is assumed that roles reside in one OU dedicated to this purpose.
- **base DN**: Ideally the nearest node to the above OUs that is also a direct or indirect parent of both. In fact, this value is used to limit the search area for user-group memberships. Consequently, both users and roles OU must be part of this domain.

The following figure shows an example LDAP tree:

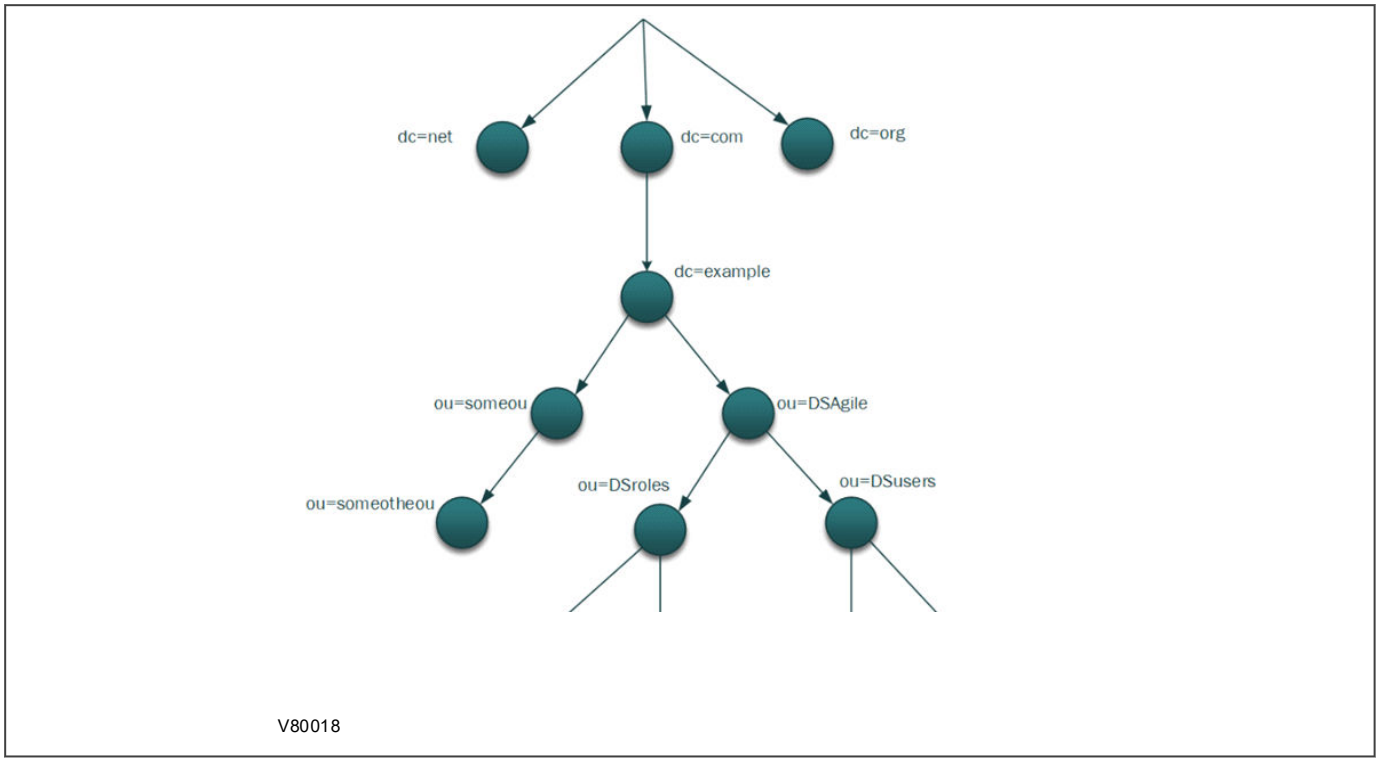

Figure 84: LDAP tree example

For the data structure shown above, the following shall be provided:

- **user OU**: ou=DSusers,ou=DSAgile,dc=example, dc=com
- **roles OU**: ou=DSroles,ou=DSAgile,dc=example, dc=om
- **based DN**: ou=DSAgile,dc=example,dc=com

Note:
For the base DN, we can also provide dc=example, dc=com but it will result in lower performance as the search area will be expanded unnecessarily.

Note:
In EnerVista configuration software user DN, roles DN and Based DN are to be provided for LDAP configuration. DN provided the full path, where OU provides the local path.

Configuration

The LDAP client in the device is configured using the "RBAC UserManagement" configuration tool embedded in the EnerVista configuration tool. For more information See LDAP configuration in the EnerVista configuration tool chapter.

Main and Backup Servers

Up to two LDAP servers can be defined. They will be called main and backup servers respectively. The main server is mandatory, and the backup server is optional.

At initialization, the main server is set as the working server.

If the main server becomes unavailable:

- The backup server is set as the working server.
- When the main server is up again, it will become the working server always taking precedence over the backup server.
- If the backup server also becomes inaccessible, the device will switch to local fallback mode.
- When the backup server is up again, it will become the working server and it will switch back to the remote mode, e.g. Legacy LDAP.

Summary:

- The main server always takes precedence over the backup server.
- Local fallback happens only when both servers are down.

An LDAP server can be considered down for a variety of reasons such as:

- It cannot be reached due to network issues or hardware issues.
- A secure TLS tunnel cannot be established due to a certificate issue, e.g., missing, invalid or revoked certificate, when communication protocol is set to StartTLS.

4.4.4 UNIQUE CONFIGURABLE USERNAMES

In 'Advanced Security', the user can configure up to 20 configurable user accounts. As part of this, user can configure a Username (length can be up to 20 ASCII char), Password for the username (in compliance with the Password complexity) and assign a supported user role (range: Administrator, Engineer, Operator, Viewer, any other role configured by the user).

The 'Administrator' is eligible to configure various accounts and modify passwords for all available accounts. Non-Admin users can only modify their own account password.

It is recommended to have more than one 'Administrator' account.

4.4.5 SECURE ENCRYPTED COMMUNICATION

4.4.5.1 MODBUS/SSH

Secure Shell (SSH) protocol provides a secure channel over an unsecured network by using a client-

server architecture. The SSH server reside in the IED. It securely encrypts the Modbus commands and data between the Toolsuite and itself using port forwarding.

SSH architecture is described in RFC4251 and is composed of three components:

- The transport Layer protocol (SSH-TRANS) – RFC 4253
- The User Authentication Protocol (SSH-USERAUTH) – RFC 4252
- The Connection Protocol (SSH-CONNECT) – RFC 4254

The port forwarding feature is available only on TCP/IP frames. UDP is not supported. The SSH server on the product runs on port 22.

It supports the Encryption Ciphers: RSA 2048, AES-128-CBC or AES-128-GCM, HMAC-SHA-256.

The SSH server has a timeout for authentication and disconnect if the authentication has not been accepted within the timeout period.

4.4.5.2 SFTP

SFTP (SSH File Transfer Protocol) is the file transfer protocol used with SSHv2. Provides secure file access, file transfer, and file management.

The SFTP commands will be limited for a given period of time to avoid DOS attacks and also implement role-based access to the file.

4.4.6 SYSLOG

The IED supports security event reporting through the Syslog protocol for supporting Security Information Event Management (SIEM) systems for centralized cyber security Monitoring over UDP and TCP protocols.

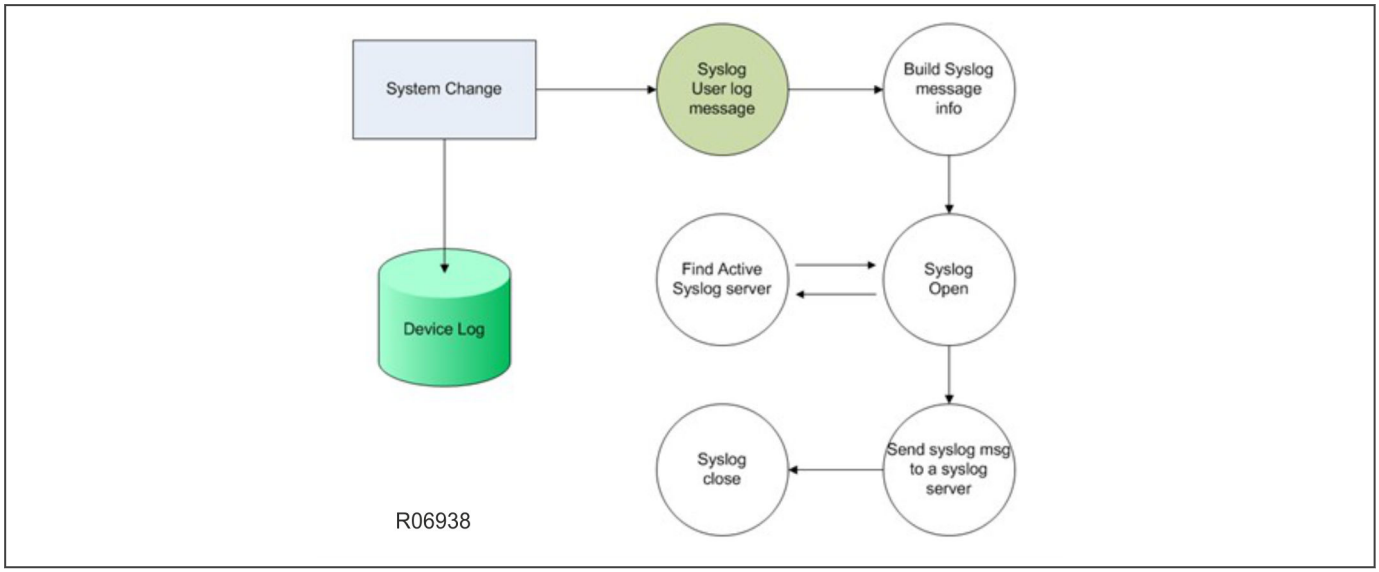

Figure 85: Syslog implementation

2 Syslog servers are supported in the configuration for redundancy. The IED will try each in sequence until one respond.

The IED logs to a remote syslog server:

- User log events, whether successful or unsuccessful
- Error log events
- Kernel error log events

Syslog Events

Mnemonic	LogType	IEC version	Severity	Cyber Security Event Numerical Event Identifier (ID)	Text (Single Space Between Each Consecutive Words)	Reference and Comments
LOGIN_OK	IEC 62351-14	1	notice	IEC 62351-14:1	Log-in successful	[IEEE 1686] specifies event logging for user successful login. In general, [IEC 62443-4-2] requires audit logs for access control.
LOGIN_OK_PW_EXPIRED	IEC 62351-14	1	notice	IEC 62351-14:2	Password expired, Log-in successful	[NERC-CIP-007-5] requires security policy. In case the entity local security policy allows a user to still login in, the course of its password expiry such as for handling a critical emergency situation, then this event would be useful. In general, [IEC 62443-4-2] requires audit logs for access control.
LOGIN_FAIL_WRONG_CR	IEC 62351-14	1	notice	IEC 62351-14:3	Log-in failed - wrong credentials	[NERC-CIP-007-5] requires cyber security respective logging for both successful and failed user logins. In general, [IEC 62443-4-2] requires audit logs for access control.
LOGIN_FAIL_3_TIMES	IEC 62351-14	1	alarm	IEC 62351-14:5	Log-in failed 3 times	[IEEE 1686] Although [IEEE 1686] mentions to log an event after 3 unsuccessful access attempts, the earlier this anomaly is logged the better cyber secured an entity can be.

Mnemonic	LogType	IEC version	Severity	Cyber Security Event Numerical Event Identifier (ID)	Text (Single Space Between Each Consecutive Words)	Reference and Comments
LOGIN_FAIL_SESSIONS_LIMIT	IEC 62351-14	1	alarm	IEC 62351-14:6	Log-in failed too many user sessions	[IEEE 1686] [NERC-CIP-007-5] requires cyber security respective logging for both successful and failed user logins. In general, [IEC 62443-4-2] requires audit logs for access control.
LOCK_USER_WRONG_CR	IEC 62351-14	1	alarm	IEC 62351-14:7	User locked - wrong credentials	[NERC-CIP-007-6] recommends limiting the number of unsuccessful access attempts and suggests measures for account lockout. In case the entity local security policy restricts its access to a user for a certain duration of time due to repeated certain failed number of logins attempts from that user, then it is necessary to generate a corresponding event. This type of event improves the security of an entity by reducing the brute force attack surface from an attacker.
LOGOUT_USER	IEC 62351-14	1	notice	IEC 62351-14:8	Log-out (user logged out)	[IEEE 1686] specifies event logging for user initiated log out.
LOGOUT_TIMEOUT	IEC 62351-14	1	notice	IEC 62351-14:9	Log-out by user inactivity (timeout)	[IEEE 1686] specifies event logging for user when the user is inactive after logging in for a certain duration of time.
SW_UPDATE_OK	IEC 62351-14	1	notice	IEC 62351-14:14	Software update was successful	[IEEE 1686] requires audit logging for firmware related aspects. A software is generic that also includes firmware.
SW_UPDATE_FAIL	IEC 62351-14	1	alarm	IEC 62351-14:15	Software update failed	
SYSLOG_EVENT_SETTING_CHANGE	IEC 62351-14	1	alarm	IEC 62351-14:1	Setting change	Setting change'. An event to indicate setting change(s). Origin: Username and IP address.
SYSLOG_EVENT_CLEAR_EVENT_RECORDS	IEC 62351-14	1	notice	IEC62351-14:1	Clear events	'Clear events command'. Clear event records command was issued. Origin: Username and IP address.
SYSLOG_EVENT_CLEAR_TRANSIENT_RECORDS	IEC 62351-14	1	notice	IEC62351-14:1	Clear transient records	'Clear transient records command'. Clear transient records command was issued. Origin: Username and IP address.
SYSLOG_EVENT_MODBUSTCP_ENABLED	IEC 62351-14	1	alarm	IEC62351-14:1	Modbus TCP enabled	ModbusTCP Enabled'. Port 502 has been opened for Read/ Write.
SYSLOG_EVENT_MODBUSTCP_DISABLED	IEC 62351-14	1	alarm	IEC62351-14:1	Modbus TCP disabled	ModbusTCP Disabled'. Port 502 closed
SYSLOG_EVENT_MODBUSTCP_READONLY	IEC 62351-14	1	alarm	IEC62351-14:1	Modbus TCP read only	'ModbusTCP ReadOnly'. Port 502 has been opened for Read Only operations.
SYSLOG_EVENT_BYPASS_ACCESS_ENABLED	IEC 62351-14	1	alarm	IEC62351-14:1	ByPass access enabled	'Bypass Access activated'. Bypass access has been activated.
SYSLOG_EVENT_BYPASS_ACCESS_DISABLED	IEC 62351-14	1	alarm	IEC62351-14:1	ByPass access disabled	'Bypass Access deactivated'. Bypass access has been deactivated.
	IEC 62351-14	1	notice	IEC62351-14:1 [IEC@41912 ID="2910:6"]	Configuration update has failed	Couldn't update configuration from given file. INVALID_CONFIGURATION_XML" UsrID="Application
	IEC62351-14	1	notice	IEC62351-14:1 [IEC@41912 ID="2910:8"]	Application configuration is valid	

Note:
For release 4.20 and later, forward, clear events, clear transient records syslog events are available for the user. FlexLogic operands are not available.
For all firmware releases, bypass access disabled, and bypass access enabled syslog events are available for the user. FlexLogic operands are not available.

4.4.7 INCREASED PRODUCT HARDENING

In Advanced security, the IED supports the ability to turn off the added features in encrypted communication. SSH and SFTP protocols on port 22 can be disabled.

4.4.7.1 ADDITIONAL FEATURES

The Advanced security option provides the properties listed below.

4.4.8 LOST PASSWORD

The relays allow modification of all user account passwords by user with “Administrator” privileges. Also, non-Admin users can update their own passwords.

For 'Advanced Security', it is recommended to have more than one user with 'Administrator' role. This will help in case 'Administrator' password is lost. Other local 'Administrator' account or Remote authentication user 'Administrator' can modify the password for the 'Administrator' whose password is lost.

If Remote authentication server is not configured or is unreachable, and if there is a single 'Administrator' configured on IED for Local authentication, then the only way to reset 'Administrator' password is to execute 'Service command' ***SETPOINTS\DEVICE\INSTALLATION*** path on HMI. This action will default passwords for all accounts.

To default passwords for all accounts, access IED from HMI as another role. Go to Settings -> Product setup -> Install: Screen will have option to enter 'Service command'. User can enter the command to reset passwords for all accounts.

Please, contact GE Vernova customer support to get the code to perform this action.

4.4.9 LOADING FACTORY CONFIGURATION

User needs to login as ‘Administrator’. Go to Security screen and then ‘Restore Defaults’ can be set to ‘Yes’.

4.4.10 ADDITIONAL FEATURES

In addition to all the Basic security features, the Advanced security option provides the properties listed below.

4.4.10.1 LOST PASSWORD

The relays allow modification of all user account passwords by user with “Administrator” privileges. Also, non-Admin users can update their own passwords.

For 'Advanced Security', it is recommended to have more than one user with 'Administrator' role. This will help in case 'Administrator' password is lost. Other local 'Administrator' account or Remote authentication user 'Administrator' can modify the password for the 'Administrator' whose password is lost.

If Remote authentication server is not configured or is unreachable, and if there is a single 'Administrator' configured on IED for Local authentication, then the only way to reset 'Administrator' password is to execute command from HMI. This action will default passwords for all accounts.

Access IED from HMI as another role. Go to Settings -> Product setup -> Install: Screen will have option to enter 'Service command'. User can enter the command to reset passwords for all accounts.

Please, contact GE customer support to get the code and perform this action.

4.4.10.2 LOADING FACTORY CONFIGURATION

User needs to login as ‘Administrator’. Go to Security screen and then ‘Restore Defaults’ can be set to ‘Yes’.

4.5 RBAC USER MANAGEMENT CYBERSECURITY CONFIGURATION TOOL

This section describes the "RBAC UserManagement" configuration tool used to configure Cybersecurity.

For early firmware releases: The Cybersecurity configuration was done fully on Modbus settings placed at ***SETPOINTS\DEVICE\SECURITY*** path. See the figures below for more detail.

For later firmware releases: The Cybersecurity configuration is done partially using Modbus settings placed at ***SETPOINTS\DEVICE\SECURITY*** path, plus the use of the RBAC UserManagement Cybersecurity configuration tool through EnerVista software.

The "**RBAC UserManagement**" Cybersecurity configuration tool can be found at EnerVista configuration tool under Setpoints, this is at ***SETPOINTS\RBAC USERMANAGEMENT*** path. RBAC UserManagement is only accessible online when communicating with the device. The Modbus settings available at ***SETPOINTS\DEVICE\SECURITY \SECURITY CONFIG*** path, such as Bypass Access, Acc Timeout HMI, Pswd Complexity, Factory Service, Require PW for Reset Key, Require PW for D/T Change, Require PW for Control, are both available in the offline and online mode of EnerVista and can also be changed through the HMI menus.

Note:
The default security settings are different for later releases

Note:
Enervista Software configuration tool file conversion will not convert Cybersecurity settings from 4.10 to 4.20. The Cybersecurity settings for 4.20 should be entered directly on the device.

4.5.1 CYBERSECURITY MODBUS SETTINGS CONFIGURATION

For 8A the Modbus Cybersecurity settings are placed at ***SETPOINTS\DEVICE\SECURITY\SECURITY CONFIG*** path. All Modbus settings are the same for Basic and Advanced Cybersecurity, but the ***Bypass PW for RC*** setting is only available for Basic.

See the list of Modbus Cybersecurity settings below:

Setting Name	Default Value	Basic/Advanced
Factory Service	Disabled	Disabled
Restore Defaults	No	No
Acc Timeout HMI	5 min	5 min
Pswd Complexity	Enabled	Enabled
Bypass Access	Disabled	Disabled
Require PW for Reset Key	Enabled	Enabled
Require PW for D/T Change	Enabled	Enabled
Require PW for Control	Enabled	Enabled
Bypass PW For RC	Off	Off

4.5.1.1 CYBERSECURITY NON-MODBUS SETTINGS CONFIGURATION

For 4.20 the non-Modbus Cybersecurity settings can be configured when connecting online to the device through the EnerVista configuration software, using the **Rback UserManagement** configuration tool at ***SETPOINTS\RBAC USERMANAGEMENT*** path.

Below is an example of **RBAC UserManagement** screens for Cybersecurity configuration, for Users and Roles, Security Settings and Syslog Configuration.

4.5.1.2 USER MANAGEMENT CONFIGURATION

The **USER MANAGEMENT** screen initial screen is similar for Basic and Advanced security. The difference is that for Basic security the 4 fixed available users/roles can be used (Viewer, Administrator, Engineer and Operator) and for Advanced Cybersecurity up to 20 users can be created and managed.

Basic Security

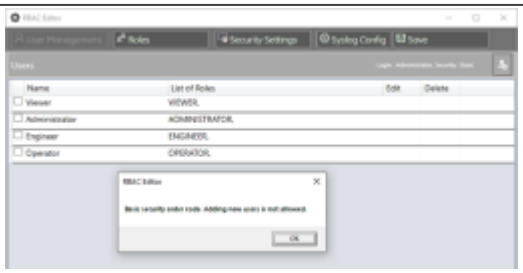

Figure 86: Basic secuity user management configuration (not configurable)

Advanced Security

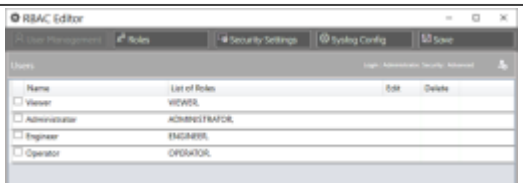

Figure 87: Advanced security user management configuration

In **Advanced Security** the device has up to 20 configurable users. Each user will have a configurable username and password, and can select one role from the standard and new user defined roles. As stated in the standard, there is the possibility to redefine new roles by adjusting the name, ID and permissions for each new defined role. It is not possible to combine roles.

The screens to configure new users in Advanced Security are as follows:

Click on the right side icon on the users screen:

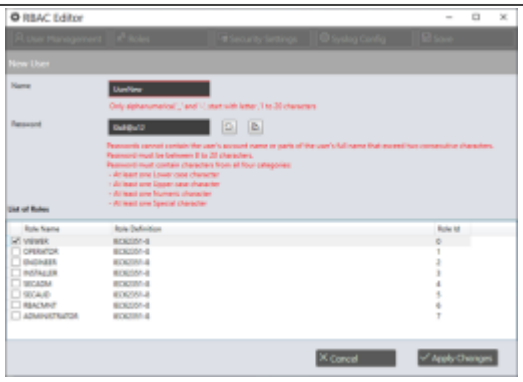

Figure 88: List of pre-configured users for advanced security

A **New User** window will open with a list of the already existing roles. In case a new role is needed it can be configured under the Roles window. See the list of pre-configured roles for Advanced Security.

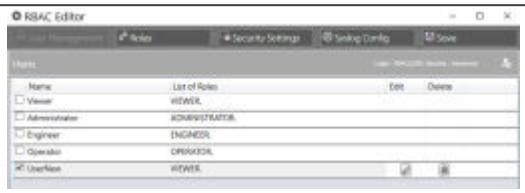

Figure 89: Example of new user creation for advanced security

For the configuration to be saved on the device, the **Save** button needs to be clicked, otherwise the configuration will not be saved. A warning message will appear if leaving the RBAC USERMANAGEMENT configurator without saving.

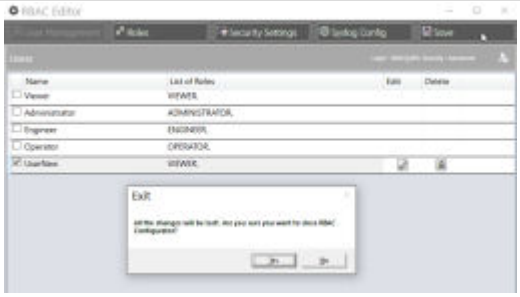

Figure 90: Save changes warning message before closing the RBAC USERMANAGEMENT configurator

4.5.1.3 ROLES CONFIGURATION

The **ROLES** initial screen is similar for Basic and Advanced security. The difference is that for Basic security the 4 fixed available roles can be used (VIEWER, ADMINISTRATOR, ENGINEER and OPERATOR) and they are not editable. For Advanced Cybersecurity 7 roles are pre-configured, the first 6 defined by the standard (VIEWER, OPERATOR, ENGINEER, INSTALLER, SECADM, SECAUD, RBACMNT), and the 7th one (ADMINISTRATOR), predefined with Role ID 7 that can be changed to any of the available private values allowed by the standard (See the IEC 62351 table in the IEC 62351 section).

Basic Security

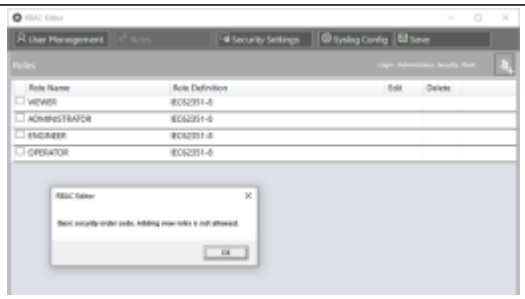

Figure 91: Basic security roles configuration (not configurable)

Advanced Security

The first 6 roles are defined by the standard and all their parameters are fixed. The 7th role, ADMINISTRATOR, is a pre-configured role to provide all of the set permissions together in a single role. The Role Name and Role Definition are not configurable, but the Role ID can be configured. The Role ID provided is set to 7, but it can be configured to -1 or any value from the Private Role ID's available.

To add a new role, click on the right side icon on the **Roles** window:

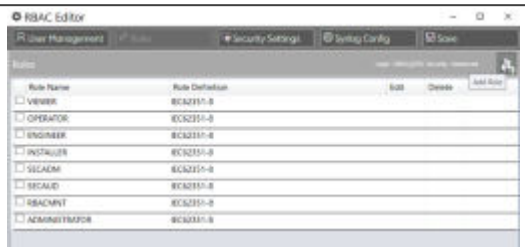

Figure 92: Advanced security roles configuration

A **New Role** window will open with a list of permissions that can be added to any role.

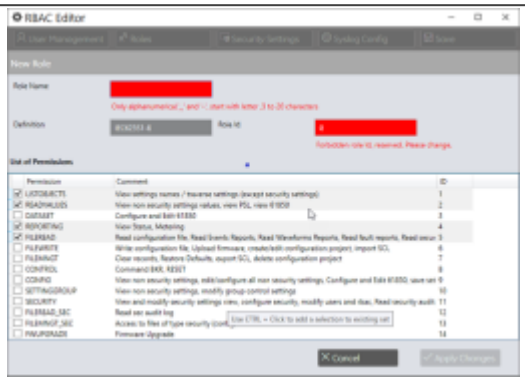

Figure 93: Advanced security new roles configuration

In order to select more than one of the available options, the CTRL+Click combination of keys must be selected. Only the Role Name and Role ID can be changed when a new role is created. The Role Definition is fixed to "IEC 62351-8" for all roles.

Follow the rules for Role Name and Role ID creation and press "Apply Changes". The new user will appear on the Roles' window:

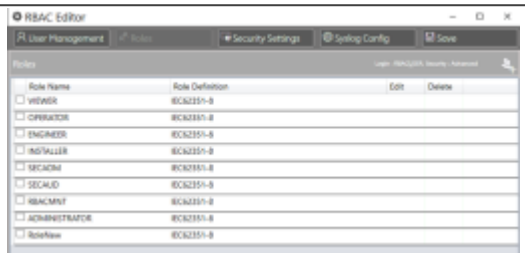

Figure 94: Example of new role creation for advance security

For the configuration to be saved on the device, the **Save** button needs to be clicked, otherwise the configuration will not be saved. A warning message will appear if leaving the RBAC USERMANAGEMENT configurator without saving.

4.5.1.4 SECURITY SETTINGS CONFIGURATION

Basic Security

For Basic Security ***Access Lockout***, ***Acc Lockout Time***, and ***Acc Timeout***, other settings are available.

Figure 95: Basic Security Settings

Advanced Security

For Advance Cybersecurity, besides the ***Access Lockout***, ***Acc Lockout Time*** and ***Acc Timeout Othr***, an ***Authentication Method*** setting is provided. Depending on the ***Authentication Method*** setting selection (`LOCAL, RADIUS LEGACY, LDAP_LEGACY`) different setting windows will be displayed.

Advanced Security Settings with Local Authentication Method

If the ***Authen. Method*** is set to `LOCAL`, ***Access Lockout***, ***Acc Lockout Time*** and ***Acc Timeout Othr*** settings are displayed.

Figure 96: Advanced security settings, authent. method set to local

Advance Security Settings with Radius Legacy Authentication Method

If the ***Authen. Method*** is set to `RADIUS_LEGACY`, the corresponding RADIUS setting will be displayed, number of retries, primary and secondary ports and IP addresses, path to certificate.

The Authentication Methods supported on RADIUS_LEGACY for the 4.20 release are as follows:

- PEAPv0 with inner authentication method MS-CHAPv2
- EAP-TTLS with inner authentication method PAP (To support RSA AM)
- PAP (unsecured, to support any RADIUS server)

Figure 97: Advance security settings with radius legacy as authentication method

To select the certificate needed to communicate through RADIUS_LEGACY, click on the ***Browse*** button and select the path to a valid certificate. The certificate for RADIUS should have a *.der extension.

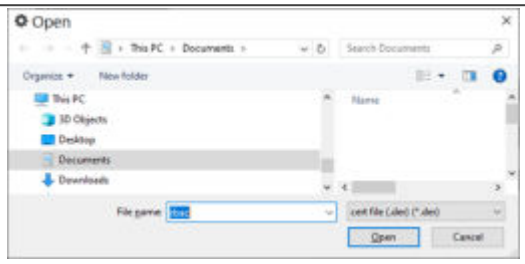

Figure 98: Advance security settings: radius legacy certificate

Advanced Security Settings with LDAP_LEGACY Authentication Method

If the ***Authen. Method*** is set to `LDAP_LEGACY`, the corresponding LDAP setting will be displayed, number of retries, primary and secondary ports and IP addresses, path to certificate, as well as the base DN, users DN, roles DN parameters. See the LDAP section for more details. The Certificate for LDAP should have a *.pem extension.

The LDAP Authentication Methods available are "TCP" and "STARTTLS".

Figure 99: Advanced security settings, authen. method set to LDAP LEGACY

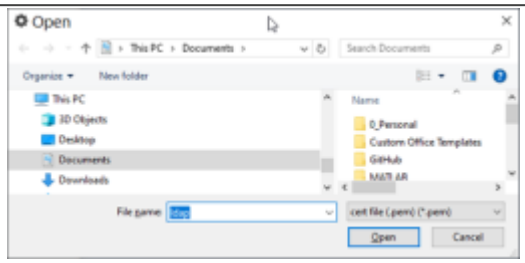

Figure 100: Advance security settings, LDAP LEGACY certificate

4.5.1.5 SYSLOG CONFIGURATION

The IED supports security event reporting through the Syslog protocol, supporting Security Information Event Management (SIEM) systems for centralized cyber security Monitoring over UDP and TCP protocols.

> *Note:*
> *For Basic security for releases 6.10 and earlier, Syslog is not available. For releases 4.20 and later, Syslog is available for both Basic and Advanced Security.*

Syslog configuration has the following settings:

- ***Network Protocol***: Available protocols for syslog configuration, to be selected between UDP and TCP
- ***Syslog IP Primary, Syslog IP Secondary***: IP Primary and secondary
- ***Syslog Primary Port, Syslog Secondary Port***: Primary and secondary port for syslog

> *Note:*
> *0.0.0.0 or 127.0.0.1 values are considered to be empty or unconfigured Ips. A valid IP value should be entered in each of the Syslog IP Primary and Syslog IP Secondary settings.*

Figure 101: Syslog configuration settings for both basic and advanced security

For any part of the Cybersecurity configuration to be saved on the device, the ***Save*** button needs to be clicked before leaving the **RBAC USERMANAGEMENT** configuration tool, otherwise the changes on the configuration will not be saved. A warning message will appear if the **RBAC USERMANAGEMENT** configurator is left without saving.

CHAPTER 5

ABOUT SETPOINTS

5.1 CHAPTER OVERVIEW

This chapter contains the following sections:

Chapter Overview 159
About Setpoints 160
Setpoints Entry Methods 161
Common Setpoints 162
Logic Diagrams 164

5.2 ABOUT SETPOINTS

The relay has a considerable number of programmable setpoints, all of which make the relay extremely flexible. These setpoints have been grouped into a variety of menus which are available from the paths shown below. Each setpoints menu has sub-sections that describe in detail the setpoints found on that menu.

Note:
Use the path provided to access the menus from the front panel and from the EnerVista D&I Setup software software. Certain named settings allow custom names. Do not create 13-character long names using the largest width characters (i.e. WWWWWWWWWWWWW). Doing so can cause the last 3 characters to overlap the setting name when viewed from the HMI or the EnerVista D&I Setup software software.

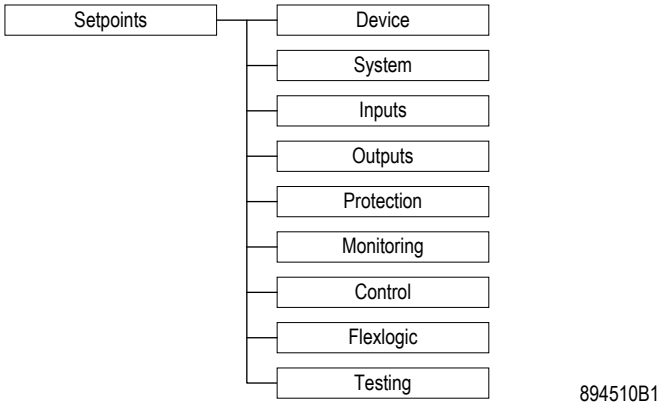

Figure 102: Main Setpoints Display Hierarchy

5.3 SETPOINTS ENTRY METHODS

Before placing the relay in operation, you must enter the setpoints, which define the system characteristics, inputs, relay outputs, and protection settings. You can use one of the following methods:

- Front panel, using the keypad and the display.
- Front USB port, connected to a portable computer running the EnerVista D&I Setup software software.
- Rear Ethernet, copper or fiber port connected to portable computer running the EnerVista D&I Setup software software.
- Rear RS485 port and a SCADA system running user-written software.
- If applicable for your model, using the Wi-Fi wireless connection to a portable computer running the EnerVista D&I Setup software software.

Using a computer is the easiest method, as files can be stored and downloaded for fast, error free entry. To facilitate this process, the EnerVista D&I Setup software software is is available for download. The relay leaves the factory with setpoints programmed to default values, and it is these values that are shown in all the setpoint message illustrations.

At a minimum, you must set the ***Setpoints > System*** setpoints for the system to function correctly. To safeguard against the installation of a relay whose setpoints have not been entered, the **Out-Of-Service** self-test warning is displayed. In addition, the Critical Failure relay is de-energized. Once the relay has been programmed for the intended application, you should change the ***Setpoints*** > ***Device*** > ***Installation*** > ***Device In Service*** setpoint from `Not Ready` (the default) to `Ready`. Before putting the relay in the Ready state, you should work through each page of setpoint messages, entering values either by keypad or computer.

5.4 COMMON SETPOINTS

To make the application of this device as simple as possible, similar methods of operation and similar types of setpoints are incorporated in various features. Rather than repeat operation descriptions for this class of setpoint throughout the manual, a general description is presented in this overview. Details that are specific to a particular feature are included in the discussion of the feature. The form and nature of these setpoints is described below.

FUNCTION

The ***<ELEMENT_NAME> FUNCTION*** setpoint determines the operational characteristic of each feature. The range for this setpoint is: `Disabled`, `Trip`, `Latched Trip`, `Alarm`, `Latched Alarm` and `Configurable`.

If the ***FUNCTION*** setpoint is selected as `Disabled`, then the feature is not operational.

If ***FUNCTION*** is selected as `Trip` or `Latched Trip`, then the feature is operational. When the `Trip` or `Latched Trip` function is selected and the feature operates, the output relay #1 `Trip` operates (when selected as Trip Relay), and the **TRIP** LED is lit.

When the `Latched Trip` function is selected and the feature operates, the **TRIP** LED and trip output operands will remain latched. The `Latched Trip` can be reset by issuing the reset command.

If ***FUNCTION*** is selected as `Alarm` or `Latched Alarm`, then the feature is operational. When this function is selected and the feature operates, the ALARM LED is lit and any assigned auxiliary output relays operate. The Trip output relay does not operate, and the TRIP LED is not lit.

When ***FUNCTION*** is selected as `Latched Alarm`, operation of the Latched Alarm function depends on the selection of the setting ***LATCH ALARM OPERATION***, configured under ***Path: Setpoints > Device > Installation***. When the setting ***LATCH ALARM OPERATION*** is set to `Self-Reset` while an element is set to `Latched Alarm`, only the Alarm LED will remain latched. When setting ***LATCH ALARM OPERATION*** to Latched, both Alarm LED and element will remain latched.

When `Alarm` is selected and the feature operates, the **ALARM** LED flashes, and it self-resets when the operating conditions are cleared.

If ***FUNCTION*** is selected as `Configurable`, the feature is fully operational but outputs are not driving any action, such as output relay #1, **ALARM** LED or anything else. Operands from this element must be programmed to the required action which may be as simple as the auxiliary output relay from the list of available relays in the element itself; FlexLogic, Trip Bus etc.

> *Note:*
> *The FlexLogic operands generated by the operation of each feature are active, and available to assign to outputs, or use in FlexLogic equations, regardless of the selected function, except when the function is set to* `Disabled`.

PICKUP

The setpoint selects the threshold equal to or above (for over elements) or equal to or below (for under elements) which the measured parameter causes an output from the measuring element.

PICKUP DELAY

The setpoint selects a fixed time interval to delay an input signal from appearing as an output.

DROPOUT DELAY

The setpoint selects a fixed time interval to delay dropping out the output signal after being generated.

TDM

The setting provides a selection for Time Dial Multiplier which modifies the operating times per the selected inverse curve. For example, if an IEEE Extremely Inverse curve is selected with TDM=2, and the fault current is 5 times bigger than the pickup level, operation of the element can not occur until 2.59 s after pickup.

OUTPUT RELAYS

The ***<ELEMENT_NAME> RELAYS*** setpoint selects the relays required to operate when the feature generates an output. The range is `Operate` or `Do Not Operate`, and can be applied to any combination of the auxiliary output relays. The default setting is `Do Not Operate`.

The available auxiliary relays vary depending on the order code.

DIRECTION

The ***<ELEMENT_NAME> DIRECTION*** setpoint is available for overcurrent features which are subject to control from a directional element. The range is `Disabled`, `Forward`, and `Reverse`. If set to `Disabled`, the element is allowed to operate for current flow in any direction. There is no supervision from the directional element. If set to `Forward`, the OC element is allowed to operate when the fault is detected by the directional element in forward direction. In this mode, the OC element does not operate for fault in reverse direction. If set to `Reverse`, the OC element is allowed to operate when the fault is detected in reverse direction, and does not operate in forward direction.

RESET

Selection of an `Instantaneous` or a `Timed` reset is provided by this setting. If `Instantaneous` is selected, the element resets instantaneously providing the quantity drops below 97 to 98% of the pickup level before the time for operation is reached. If `Timed` is selected, the time to reset is calculated based on the reset equation for the selected inverse curve.

BLOCK

The ***<ELEMENT_NAME> BLOCK*** setpoint selects an operand from the list of FlexLogic operands, which when active, blocks the feature from running. When set to `On` the feature is always blocked; when set to `Off`, block is disabled.

EVENTS

The ***<ELEMENT_NAME> EVENTS*** setpoint can be set to `Enabled`, or `Disabled`. If set to `Enabled`, the events associated with the pickup, operation, or other conditions of the feature are recorded in the Event Recorder.

TARGETS

The ***<ELEMENT_NAME> TARGETS*** setpoint can be set to `Disabled`, `Self-Reset`, or `Latched`. If disabled, all the target messages are disabled and do not appear on screen. If set to `Self-Reset`, or `Latched`, the targets associated with the pickup, operation, or another condition of the feature are displayed on the screen of the relay. The targets disappear from the screen when `Self-Reset` is selected, and the conditions are cleared. The targets stay on the screen, when `Latched` is selected, and the conditions are cleared.

> *Note:*
> *The targets of status, control and pickup conditions are always self-reset type, regardless of the `Self-Reset`, or `Latched` configuration of setpoint **<ELEMENT_NAME> TARGETS**.*
> *To ensure the settings file inside the relay is updated, wait 30 seconds after a setpoint change before cycling power.*
> *When IP addresses are changed and sent as a Settings file, the unit reboots twice.*

5.5 LOGIC DIAGRAMS

Refer to the logic diagrams provided for a complete understanding of the operation of each feature. These sequential logic diagrams illustrate how each setpoint, input parameter, and internal logic is used in a feature to obtain an output. In addition to these logic diagrams, the Setpoints chapter provides written descriptions for each feature.

- **Setpoints**: Shown as a block with a heading labeled SETPOINT. The exact wording of the displayed setpoint message identifies the setpoint. Major functional setpoint selections are listed below the name and are incorporated in the logic.
- **Comparator Blocks**: Shown as a block with an inset box labeled RUN with the associated pickup/dropout setpoint shown directly above. Element operation of the detector is controlled by the signal entering the RUN inset. The measurement/comparison can only be performed if a logic 1 is provided at the RUN input. The relationship between a setpoint and input parameter is indicated by the following symbols: < (less than), > (greater than), etc.
- **Pickup and Dropout Time Delays**: Shown as a block with indication of two timers – the t_{PKP} (Pickup Delay), and t_{DPO}(Dropout Delay).
- **LED Indicators**: Shown as the following schematic symbol **(X)**.
- **Logic**: Described with basic logic gates (AND, OR, XOR, NAND, NOR). The inverter (logical NOT), is shown as a circle: **O**
- **FlexLogic operands**: Shown as a block with a heading labeled FLEXLOGIC OPERANDS. Each feature produces output flags (operands) which can be used further for creating logic in the FlexLogic equation editor, or Trip Bus, or can be directly assigned to trigger an output. The operands from all relay features constitute the list of FlexLogic operands.

CHAPTER 6

DEVICE SETPOINTS

6.1 CHAPTER OVERVIEW

This chapter describes the Device setpoint menu settings in detail.

This chapter contains the following sections:

Chapter Overview	166
Device menu hierarchy	167
Custom Configuration	168
Real-time Clock	171
Communications	176
Transient Recorder	208
Data Logger	210
Fault Reports	213
Event Data	216
Flex states	217
Front Panel	218
Resetting	238
Installation	239
Self-Test Monitor	241
Clear Records	242

6.2 DEVICE MENU HIERARCHY

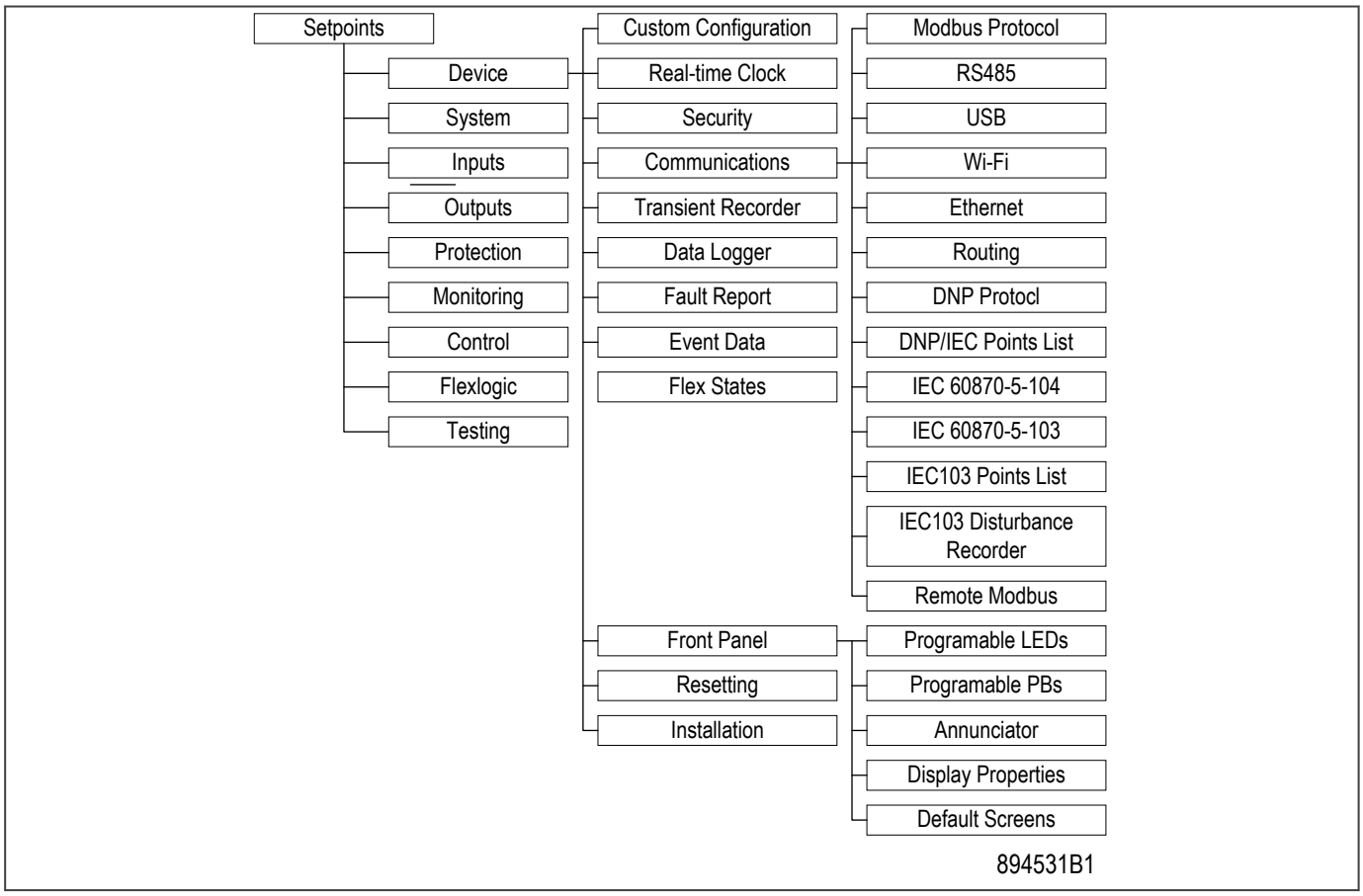

Figure 103: Device Display Hierarchy

6.3 CUSTOM CONFIGURATION

The custom configuration features allows you to customize the configurations as desired.

Configuration Mode

The 8-series platform, supports a multitude of functions and features including:

- Protection and Control (P&C)
- Asset Monitoring
- Flexible Logic Engine (FlexLogic)
- Records and Reporting
- Time Synchronization
- Testing/Simulation

Taking into consideration user experience, configuration mode controls how the Setpoints are presented by only displaying settings that are typically used, or settings that are important to configure.

Two configuration modes are supported:

- **Simplified** - In this mode, some of the functions, features and settings are hidden or made read-only (grayed out). All the settings made in Regular configuration mode are still applied during simplified mode (they are either hidden or read-only), so simplified configuration mode can also be seen as a way of locking advanced setpoints.
- **Regular** - In this mode, all function/features and setpoints of the device are editable and nothing is hidden or grayed out.

Configuration mode is applicable to the Setpoints items only and does not control view/presentation to other main menu items, such as Device Definition, Status, Metering, Records, Commands and Maintenance. The configuration mode setting is available to be changed by the Administrator role. The configuration mode control is applicable to device HMI and setup software, as well as online and offline setting files.

> *Note:*
> *Configuration mode does not disable the device functionality or settings. It only controls the view or presentation on the HMI and setup software screens. Therefore, settings which are hidden or Read-only are preserved and applied within the device.*

The home icon on the home page changes color according to the configuration mode. When in Simplified configuration mode, the home icon color is green. When in regular mode the home icon color is blue.

Example 1: Setting items view control

The ***Phase TOC 1*** function in Regular mode has 14 editable setpoints. In the Simplified mode this function has only 6 out of the 14 setpoints made available to edit. 5 setpoints are hidden, and 3 setpoints are read/view-only.

> *Note:*
> *All setpoints under Regular mode are still applied and used by the device. For example the **Input** is hidden but configured as `Phasor` during Regular mode, therefore **Phase TOC 1** still applies `Phasor` as an input. Similarly, **Reset** is read-only, and **Phase TOC 1** still applies `Instantaneous` for resetting. The read-only settings are greyed out.*

Regular

..\Current\Phase TOC 1

Item Name	Value	Unit
Function	Disabled	
Signal Input	CT Bank 1 -J1	
Input	Phasor	
Pickup	1.000	x CT
Curve	IEEE Mod Inverse	
TDM	1.00	
Reset	Instantaneous	
Direction	Disabled	
Voltage Restraint	Disabled	
Volt Lower Limit	0.1	p.u.
Block	Off	
Relays	Do Not Operate	
Events	Enabled	
Targets	Self-Reset	

PTOC 1

Simplified

..\Current\Phase TOC 1

Item Name	Value	Unit
Function	Disabled	
Signal Input	CT Bank 1 -J1	
Pickup	1.000	x CT
Curve	IEEE Mod Inverse	
TDM	1.00	
Reset	Instantaneous	
Direction	Disabled	
Voltage Restraint	Disabled	
Relays	Do Not Operate	

PTOC 1

Figure 104: Comparison of the setpoints for Regular and Simplified mode

Example 2: Function/Feature view control

The differences in the ***Inputs*** setpoint screens for Regular and Simplified mode are shown below. Under Simplified mode, the ***Virtual Inputs*** and ***Remote Inputs*** are hidden for any configuration change. However, the device will still accept and process virtual and remote inputs based on what is configured during Regular mode. This way, Simplified configuration mode does not change the behavior of the device.

Regular

..\Setpoints\Inputs

Item Name
Contact Inputs
Virtual Inputs
Analog Inputs
Remote Inputs

Inputs V Inputs MA In Rem In

Simplified

..\Setpoints\Inputs

Item Name
Contact Inputs
Analog Inputs

Inputs MA In

Figure 105: Comparison of the Inputs screens for Regular and Simplified mode

CONFIG MODE

Path: ***Setpoints*** > ***Device*** > ***Config Mode***

Range: Simplified, Regular

Default: Regular

This setting allows selection of the configuration mode while the device is accessed by the Administrator role. In `Regular` configuration mode, all values in settings/functions can be edited. In `Simplified` configuration mode, selected settings/functions are hidden or the values are read-only to enhance user experience with minimum setpoint changes.

6.4 REAL-TIME CLOCK

Path: ***Setpoints*** > ***Device*** > ***Real Time Clock***

The relay is capable of receiving a time reference from several time sources in addition to its own internal clock for the purpose of time-stamping events, transient recorders and other occurrences within the relay. The accuracy of the time stamp is based on the time reference that is used. The relay supports an internal clock, SNTP, IRIG-B, and PTP IEEE 1588 (version 2) as potential time references.

If two or more time sources are available, the time source with the higher priority shown in Time Sources table is used where 1 is considered to be the highest priority. Please note that the time source priority of PTP and IRIG-B can be swapped. If both PTP and IRIG-B are available, by default the clock syncs to PTP over IRIG-B. If PTP is not available, the CPU syncs the internal clock to IRIG-B.

Time Sources

Time Source	Priority
PTP (IEEE1588)	1*
IRIG-B	2*
SNTP	3
Internal Clock	4

* The priority of IRIG-B and PTP can be swapped.

Note:
Synchronization by IEC103, DNP, Modbus and IEC104 is not going to be issued if there is a sync source from IRIG-B, SNTP or PTP.

Note:
IRIG-B is not available for the 859

6.4.1 PTP CONFIGURATION

Path: ***Setpoints*** > ***Device*** > ***Real Time Clock*** > ***Precision Time***

PORT 4(5) PTP FUNCTION

Range: Disabled, Enabled

Default: Enabled

When the port setting is selected as `Disabled` PTP is disabled on the port. The relay does not generate, or listen to, PTP messages on the port.

PORT 4(5) PATH DELAY ADDER

Range: 0 to 60000 ns in steps of 1 ns

Default: 0 ns

The time delivered by PTP is advanced by the time value in the setting prior to the time being used to synchronize the relay's real time clock. This is to compensate for time delivery delays not compensated for in the network. In a fully compliant Power Profile (PP) network, the peer delay and the processing delay mechanisms compensate for all the delays between the grandmaster and the relay. In such networks, the setting is zero.

In networks containing one or more switches and/or clocks that do not implement both of these mechanisms, not all delays are compensated, so the time of message arrival at the relay is later than the time indicated in the message. The setting can be used to approximately compensate for the delay. Since the relay is not aware of

network switching that dynamically changes the amount of uncompensated delay, there is no setting that always completely corrects for uncompensated delay. A setting can be chosen that reduces worst-case error to half of the range between minimum and maximum uncompensated delay if these values are known.

PORT 4(5) PATH DELAY ASYMMETRY

Range: -1000 to +1000 ns in steps of 1 ns

Default: 0 ns

The setting corresponds to Delay Asymmetry in PTP, which is used by the peer delay mechanism to compensate for any difference in the propagation delay between the two directions of a link. Except in unusual cases, the two fibers are of essentially identical length and composition, so the setting is set to zero.

In unusual cases where the length of link is different in different directions, the setting is to be set to the number of nanoseconds longer the Ethernet propagation delay is to the relay compared with the mean of path propagation delays to and from the relay. For instance, if it is known say from the physical length of the fibers and the propagation speed in the fibers that the delay from the relay to the Ethernet switch it is connected to is 9000 ns and that the delay from the switch to the relay is 11000 ns, then the mean delay is 10000 ns, and the path delay asymmetry is +1000 ns.

STRICT POWER PROFILE

Range: Enabled, Disabled

Default: Enabled

Power profile (IEEE Std C37.238™ 2011) requires that the grandmaster clock be power profile compliant, that the delivered time have a worst-case error of ±1 µs, and that the peer delay mechanism be implemented. With the strict power profile setting enabled, the relay selects as master only clocks displaying the IEEE_C37_238 identification codes. It uses a port only when the peer delay mechanism is operational. With the strict power profile setting disabled, the relay uses clocks without the power profile identification when no power profile clocks are present, and uses ports even if the peer delay mechanism is non-operational.

The setting applies to all of the relay's PTP-capable ports.

PTP DOMAIN NUMBER

Range: 0 to 255

Default: 0

The setting is set to the domain number of the grandmaster-capable clock(s) to which they can be synchronized. A network may support multiple time distribution domains, each distinguished with a unique domain number. More commonly, there is a single domain using the default domain number zero.

The setting applies to all of the relay's PTP-capable ports.

PTP VLAN PRIORITY

Range: 0 to 7

Default: 4

The setting selects the value of the priority field in the 802.1Q VLAN tag in request messages issued by the relay's peer delay mechanism. In compliance with PP (Power Profile) the default VLAN priority is 4, but it is recommended that in accordance with PTP it be set to 7.

Depending on the characteristics of the device to which the relay is directly linked, VLAN Priority may have no effect.

The setting applies to all of the relay's PTP-capable ports.

PTP VLAN ID

Range: 0 to 4095

Default: 0

The setting selects the value of the ID field in the 802.1Q VLAN tag in request messages issued by the relay's peer delay mechanism. It is provided in compliance with PP (Power Profile). As these messages have a destination address that indicates they are not to be bridged, their VLAN ID serves no function, and so may be left at its default value.

Depending on the characteristics of the device to which the relay is directly linked, VLAN ID may have no effect.

The setting applies to all of the relay's PTP-capable ports.

PTP PRIORITY

Range: 1, 2

Default: 1

The setting sets the priority of PTP time for the relay. If set to 1 and IRIG-B is available, the relay syncs the relay's time reference to the PTP time. If set to 2 and IRIG-B is available, the relay syncs its reference to IRIG-B time.

> *Note:*
> *IRIG-B is not available for the 859*

6.4.2 CLOCK

Path:***Setpoints*** > ***Device*** > ***Real Time Clock*** > ***Clock***

DATE

Format: Month/Day/Year

Range: Month: 1 to 12; Day: 1 to 31; Year: 2008 to 2094

Default: 01/01/2008

TIME

Range: 0 to 23: 0 to 59:0 to 59

Default: 00:00:00

LOCAL TIME OFFSET FROM UTC

Range: –24.00 to 24.00 hrs in steps of 0.5 hrs

Default: 0.00 hrs

REAL TIME CLOCK EVENTS

Range: Disabled, Enabled

Default: Enabled (FW 3.00), Disabled (FW4.10)

IRIG-B

Range: Disabled, Enabled

Default: Disabled

Note:
IRIG-B is not available for the 859

DAYLIGHT SAVINGS TIME

Range: Disabled, Enabled

Default: Disabled

DST START MONTH

Range: January to December (all months)

Default: Not Set

DST START DAY

Range: SUN to SAT (all days of the week)

Default: Not Set

DST START WEEK

Range: 1st, 2nd, 3rd, 4th, Last

Default: Not Set

DST START HOUR

Range: 0 to 23

Default: 2

DST END MONTH

Range: January to December (all months)

Default: Not Set

DST END WEEK

Range: 1st, 2nd, 3rd, 4th, Last

Default: Not Set

DST END DAY

Range: SUN to SAT (all days of the week)

Default: Not Set

DST END HOUR

Range: 0 to 23

Default: 2

Note:
IRIG-B is available in all relays apart from the 859. A failure on IRIG-B triggers an event and a target message.
IRIG-B is auto-detected. The signal type is detected in the hardware, so there are no configurable options.

6.4.3 SNTP PROTOCOL

8 series relays accept time synchronization from up to two different SNTP servers. In order to define number of SNTP servers to be used, different settings for each SNTP server must be configured.

- If one SNTP server is used to synchronize the relay, the SNTP Server and UDP port settings must be configured with the corresponding settings.
- If two SNTP servers are used to synchronize the relay, the SNTP Server IP and UDP port for the main server must be configured, along with the SNP Server 2 IP and UDP port for the back-up server.

> *Note:*
> *8 Series relays only support SNTP unicast. It may take 2-3 minutes for the relay to synchronize with the SNTP server.*

Path: ***Setpoints*** > ***Device*** > ***Real Time Clock*** > ***SNTP***

SNTP FUNCTION

Range: Disabled, Enabled

Default: Disabled

SNTP SERVER IP ADDRESS

Range: Standard IP Address Format

Default: 0.0.0.0

SNTP UDP PORT NUMBER

Range: 0 to 65535 in steps of 1

Default: 123

SNTP SERVER 2 IP ADDRESS

Range: Standard IP Address Format

Default: 0.0.0.0

SNTP 2 UDP PORT NUMBER

Range: 0 to 65535 in steps of 1

Default: 123

> *Note:*
> *The SNTP and PTP settings take effect after rebooting the relay.*

6.5 COMMUNICATIONS

8-series relays relays have a two-stage communications capability. The base CPU supports the Modbus protocol through the Ethernet, USB and serial ports. In addition, the base CPU also supports the IEC 103, DNP serial, DNP TCP/IP, Ethernet and TFTP protocol. Once the communications module option is added to the base, the communications module supports IEC 61850 Ed.2. The communications CPU also supports Modbus TCP, DNP TCP, TFTP, SFTP, and SNTP protocol.

6.5.1 MODBUS PROTOCOL

All Ethernet ports and serial communication ports support the Modbus protocol. The only exception is if the serial port has been configured for DNP or IEC 60870-5-103 operation (see descriptions below). This allows the EnerVista D&I Setup software (which is a Modbus master application) to communicate with the relay.

The relay implements a subset of the Modicon Modbus RTU serial communication standard. The Modbus protocol is hardware-independent. That is, the physical layer can be any of a variety of standard hardware configurations. This includes USB, RS485, fiber optics, etc. Modbus is a single master / multiple slave type of protocol suitable for a multi-drop configuration.

The relay is always a Modbus slave with a valid slave address range 1 to 254.

DATA FRAME FORMAT AND DATA RATE

One data frame of an asynchronous transmission to or from a relay typically consists of 1 start bit, 8 data bits, and 1 stop bit. This produces a 10-bit data frame. This is important for transmission through modems at high bit rates. Modbus protocol can be implemented at any standard communication speed. The relay supports operation at 9600, 19200, 38400, 57600, and 115200 bps baud rate. The USB interface supports Modbus TCP/IP.

FUNCTION CODE SUPPORTED

The following functions are supported:

- FUNCTION CODE 03H - Read Setpoints
- FUNCTION CODE 04H - Read Actual Values
- FUNCTION CODE 05H - Execute Operation
- FUNCTION CODE 06H - Store Single Setpoint
- FUNCTION CODE 07H - Read Device Status
- FUNCTION CODE 08H - Loopback Test
- FUNCTION CODE 10H - Store Multiple Setpoints
- FUNCTION CODE 42H - Group Settings Read
- FUNCTION CODE 43H - Group Settings Write

When a Modbus master such as the EnerVista D&I Setup software communicates with the relay over Ethernet, the relay slave address, TCP port number and IP address for the associated port must be configured and are also configured within the Master for this device. The default Modbus TCP port number is 502.

6.5.2 MODBUS CONFIGURABLE PARAMETERS

The following Modbus parameters are configurable:

Path: ***Setpoints*** > ***Device*** > ***Communications*** > ***Modbus Protocol***

MODBUS SLAVE ADDRESS

Range: 1 to 254 in steps of 1

Default: 254

For the RS485 ports each 8 Series must have a unique address from 1 to 254. Address 0 is the broadcast address to which all Modbus slave devices listen. Addresses do not have to be sequential, but no two devices can have the same address, otherwise conflicts resulting in errors occur. Generally, each device added to the link uses the next higher address starting at 1.

MODBUS TCP PORT NUMBER

Range: 1 to 65535 in steps of 1

Default: 502

The TCP port number used with Modbus over Ethernet. Note that the maximum number of simultaneous Modbus connections supported over Ethernet is three for an 8 Series without the communications card and five for an 8 Series with the communications card.

COMPATIBILITY

Range: Disabled, FlexMap

Default: Disabled

Compatibility mode changes the Modbus actual value registers to emulate the SR relay. The emulation supports typical actual value data for common data items.

See the *8 Series Protective Relay Communications guide* for the list.

FLEXMAP FILE

Range: Up to 13 alphanumeric characters

Default: Depends on the type of the relay and order code options:

SR735XAFlexMap.000 for Current protection option "S"

SR750XAFlexMap.000 for Current Protection option "M", "D" or "A"

SR469XAFlexMap.000

SR745XAFlexMap.000

SR489XAFlexMap.000

369XAFlexMap.000

The ***Flexmap File*** describes the translation from the Modbus memory map to the target Modbus memory map.

The default Flexmap File can be changed by entering the filename. In the case where the default `SR735XAFlexMap.000` file requires to be changed to SR750 then enter `SR750XAFlexMap.000` file.

RS485 Port1

Range: Off, On

Default: Off

RS485 Port2

Range: Off, On

Default: Off

RS485 Port3 (only 859)

Range: Off, On

Default: Off

Ethernet Port1

Range: Off, On

Default: Off

Ethernet Port2

Range: Off, On

Default: Off

Ethernet Port4 (not 859)

Range: Off, On

Default: Off

Ethernet Port5 (not 859)

Range: Off, On

Default: Off

MODBUS ACTIVITY TIMEOUT

Range: 0 to 3600 s in steps of 1 s

Default: 0 s

The ***Modbus Activity Timeout*** specifies the minimum time without Modbus communication. This timeout is used to declare the Modbus **Loss of Communication** state.

The Modbus state is always Active if the ***Modbus Activity Timeout*** is `0 s`.

MODBUS 485 READ ACTUALS

Range: Function Code 03h, Function Code 04h

Default: Function Code 04h

The ***Modbus 485 Read Actuals*** setting configures the Function Code that the relay responds to from a Modbus Master when Actual Values are requested. Use this setting in scenarios where the Modbus Master can only communicate using Function Code 03h for requesting Actual Values.

> *Note:*
> *This setting applies only to the RS485 connection.*
> *When this setting is changed to Function Code 03h, retrieving configuration settings through the RS485 port is not possible.*

MODBUS ERROR RESPONSES

The following exception response codes are implemented.

Error ID	Exception	Description
01	ILLEGAL FUNCTION	The function code transmitted is not one of the functions supported by the 8 Series.
02	ILLEGAL DATA ADDRESS	The address referenced in the data field transmitted by the master is not an allowable address for the 8 Series.
03	ILLEGAL DATA VALUE	The value referenced in the data field transmitted by the master is not within range for the selected data address.

6.5.3 RS485

On the rear, the relay is equipped with two RS485 serial communication ports. The RS485 port has settings for baud rate and parity. It is important that these parameters agree with the settings used on the computer or other equipment connected to this port. A maximum of 32 relays can be daisy-chained and connected to a DCS, PLC or a PC using the RS485 port.

Path: ***Setpoints*** > ***Device*** > ***Communications*** > ***RS485***

BAUD RATE

Range: 2400, 4800, 9600, 1200, 19200, 38400, 57600, 115200

Default: 115200

PARITY

Range: None, Odd, Even

Default: None

PORT PROTOCOL

Range: Modbus, DNP 3.0, IEC 60870-5-103

Default: Modbus

6.5.4 WI-FI

Wi-Fi refers to Wireless Local Area Networks (WLANs) that are based on the 802.11 set of standards. WLANs provide Local Area Network (LAN) type of connectivity but without the need of cables, which makes them more convenient for use in limited spaces. The signal strength and its range is determined by the wireless device's antenna technology and standard, the best being IEEE 802.11n.

Wi-Fi defines two modes of operation, namely ad-hoc, used for small deployments, and infrastructure mode, which supports more robust types of security and better capabilities for centralized management. The infrastructure mode requires an Access Point (AP). Devices operating in this mode pass all data through the AP.

The integrated Wi-Fi module conforms to IEEE 802.11b/g/n standards. The devices operate in infrastructure mode. Security is optional, but enabled by default. We advise you to leave this switched on, as wireless traffic is very susceptible to cyber-attacks.

The security technology used is WPA2 (Wireless Protected Access version 2), based on the IEEE 802.11i standard for data encryption. WPA2 is a second version of WPA technology, designed to solve known security limitations found in one of the encryption algorithms used by WPA, namely TKIP (Temporal Key Integrity Protocol). WPA2 uses CCMP (Counter Mode with Cipher Block Chaining Message Authentication Code Protocol), which provides an enhanced data cryptographic encapsulation mechanism based on AES (Advanced Encryption Standard). CCMP makes WPA2 much stronger and secure than its predecessors, WPA and WEP.

Several forms of WPA2 security keys exist. The relay supports WPA2 PSK (Pre-Shared Key), which utilizes 64 hexadecimal digits. The key may actually be entered as a string of 64 hexadecimal digits or as a passphrase of 8 to 32 printable ASCII characters. For user convenience, the settings accept the key in the form of a passphrase. Internally the ASCII passphrase is used for deriving a 256-bit key.

The following are the Wi-Fi network settings. Only an Administrator has the rights to change them.

Path: *Setpoints* > ***Device*** > ***Communications*** > ***Wi-Fi***

WiFi Access

This setting switches WiFi functionality on/off using a Flexlogic operand. By default WiFi is off.

WiFi IP Address / Subnet Mask

The default IP address is 192.168.0.x, where x is calculated as:

X = (modulo 242 of the last 3 digits of the serial number) + 12 Example: A unit has a serial number of MJ3A16000405, the default IP address would be 192.168.0.175 (where 405 mod 242 = 163 + 12 = 175).

This is to ensure uniqueness of the default IP address for all 8 Series devices present on one wireless network and it creates a usable address space from 192.168.0.12 to 192.168.0.253 for the devices.

Note:
From the remaining range of unicast addresses 192.168.0.1 to 192.168.0.253, at least two are going to be used for the AP and a laptop installed with the relevant software version, which will be used to configure the devices. The AP should be configured with the address 192.168.0.1 and mask 255.255.255.0 and have DHCP enabled with a DHCP range from 192.168.0.2 to 192.168.0.253. This allows laptops, iPads and any other devices to connect to the local network without the need to statically configure their own IP address and mask.

WiFi Security

The setting enables Wi-Fi security. If set to “None”, there is no security and all traffic is open. By default WiFi Security is set to WPA2-PSK.

WiFi SSID

The SSID is the public name of a wireless network. All of the wireless devices on a WLAN must use the same SSID in order to communicate with each other. The default for the SSID is provided by the vendor with the shipment of any new device. We recommend that you modify this name as needed after initial startup, to ensure unique SSIDs if several WLANs are configured.

Note:
SSID broadcast should be disabled on AP. This provides some extra protection by requiring an SSID before connecting to the device and making it harder for casual outsiders looking for wireless networks to find the device and attempt to connect.

WiFi WPA2 Passphrase

The WPA2 Passphrase is used for generating the encryption key. The same passphrase must be set on AP and on all devices communicating on the same WLAN. The device supports a string of up to 14 printable ASCII characters. Internally a 256-bit key is calculated by applying the PBKDF2 key derivation function to this passphrase, using the SSID as the salt and 4096 iterations of HMAC-SHA1.

The devices are configured with a default passphrase, which is provided by the vendor with the shipment of any new device.

When choosing a new passphrase, the password complexity rules of CyberSentry must be used (see CyberSentry details in the relay Instruction manual).

This field is visible only if the security is set to WPA2-PSK.

Note:
Ideally the passphrase should be set through the software and not directly from the Keypad, where there are limitations in terms of space and types of characters supported. However, for convenience, the passcode setting is available from the Keypad as well.

WiFi Status

A Wi-Fi symbol is displayed in the caption area of the product front panel. The following table lists all possibilities for this icon:

Wi-Fi State	Wi-Fi Icon Color
Disabled	Icon is gray and crossed by a red line
Disconnected	Gray
Connecting	Yellow
Connected	Green

Wi-Fi Events

Event	Description
Wi-Fi Connected	This event is recorded to indicate a network connect.
Wi-Fi Disconnected	This event is recorded to indicate a network disconnect.

Note:
If the relay is in service mode and the settings are default a minor error is triggered.

6.5.5 WI-FI QUICK START PROCEDURE

The following provides the settings information and instructions to quickly setup Wi-Fi.

Required Equipment

- Relay with Wi-Fi functionality
- PC with Wi-Fi
- Access Point

Quick Start Procedure

1. The PC Wi-Fi Network Passphrase is provided with the relay
2. The Access Point settings are given in the table below.
3. Any relays in range are automatically connect to the configured Access Point.
4. Start EnerVista D&I Setup software on a PC and use the Discover function, all relays within range appear and are populated for initial configuration and commissioning.
5. Once the relay is configured, change the relay default Wi-Fi SSID and Passphrase settings before the relay goes into service.

Access Point Settings	
IP address:	192.168.0.1
Subnet Mask:	255.255.255.0
SSID:	same as entered on the PC (SSID provided with the relay)
Broadcast:	disabled
Security type:	WPA2-PSK (WPA2-Personal)
Encryption:	AES

Access Point Settings	
Passphrase:	same as entered on the PC (Passphrase provided with the relay)
DHCP enabled:	range of 192.168.0.12 to 192.168.0.253

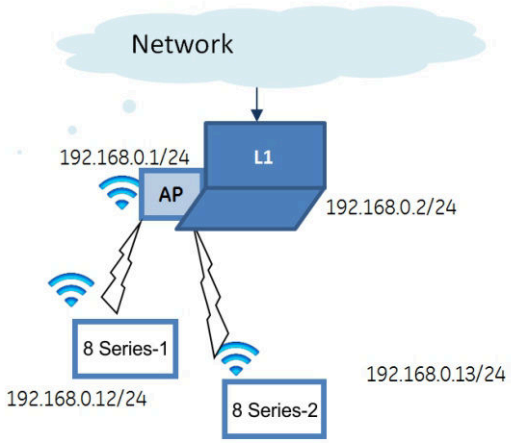

Figure 106: Example of Wi-Fi Deployment

6.5.6 USB

The USB parameters are as follows:

IP Address: 172.16.0.2

IP Subnet Mask: 255.255.255.0

IP GWY IP Address: 172.16.0.1

> *Note:*
> *Whenever the device is rebooted, the USB cable needs to be unplugged and plugged in again for proper communication to be established over USB.*

Connecting multiple relays over USB to a single PC is not possible because in the case of USB, the IP address of the device 172.16.0.2 is constant.

6.5.7 ETHERNET PORTS

The following communication offerings are available.

Base Offering

- 2x Copper (RJ45) Ports
- Modes: 10/100 Mbps
- Protocols: Modbus TCP, DNP 3.0, IEC 61850 GOOSE, SNTP, IEC 62439-3 clause 4 (PRP)

Advanced Offering

- 4x Copper (RJ45) Ports or 2x Fiber
- Modes: 10/100 Mbps (copper)
- 100Mbps (Fiber)
- Protocols: Modbus TCP, DNP 3.0, IEC 61850 GOOSE, SNTP, IEC 62439-3 clause 4 (PRP), HSR

> *Note:*
> *Always use Shielded Twisted Pair (STP) cable when connecting to RJ45 Ethernet ports*

6.5.7.1 NETWORK SETTINGS MENU

This section describes the network settings menu. If the communications card is installed network port 1 is no longer available. When using more than one Ethernet port, configure each to belong to a different network or subnet using the IP addresses and mask, else communication becomes unpredictable when more than one port is configured to the same subnet.

> *Note:*
> *Use the softkeys and **Down/Up** key to enter an IP address. When entering an IP address you must press the **BACK** key first to switch between softkey mode and the **Down/Up** key mode.*

NETWORK 1, 2, 4, 5

Range: Standard IPV4 Address format

Default: 192.168.11.11 (Port 1)

Default: 192.168.11.12 (Port 2)

Default: 192.168.11.13 (Port 4)

Default: 192.168.11.14 (Port 5)

The setting sets the port's IPV4 address in standard IPV4 format.

> *Note:*
> *The setting is valid on Port 2(5) if Prt1(4) is set to Independent*

> *Note:*
> *The setting is valid on Port 2 if **Prt1 Operation** is set to* `Independent`.

> *Note:*
> *172.17.X.X/16 and 172.18.X.X/16 are reserved IPs.*

PRT1<n> SUBNET IP MASK

Range: Standard IPV4 mask format

Default: 255.255.255.0 (Port 1, 2, 4, 5)

This setting specifies the IPv4 mask associated with the corresponding port IP address.

PRT<n> OPERATION

Range: Independent, LLA, PRP, HSR

Default: Independent

This setting determines the mode of operation for ports 1 and 2: `Independent`, `LLA, PRP, HSR`

Independent operation: Ports 1, 2, 4 and 5 operate independently with their own MAC and IP address.

LLA operation: Ports 1, 2, 4 and 5 use port 1's MAC and IP address settings while port 2 is in standby mode in that it does not actively communicate on the Ethernet network but monitors its link. If port 1 is active and the link loss problem is detected, communications is switched to port 2 immediately. Port 2 is, in effect, acting as a redundant or backup link to the network for port 1.

LLA (Link Loss Alert)*:** is a proprietary feature supported by the fiber optic ports. When enabled, this feature is able to detect a failure of the fiber link. If ***Prt1 Operation is set to `LLA`, the detection of a link failure by this feature triggers the transfer of communications. If LLA is enabled on a port with a non-fiber SFP, the target message `LLA not supported by Prt (1 or 2)` is displayed on the keypad and an event is logged.

> *Note:*
> *LLA is not available on port 4,5 copper (RJ45). When the port operation is selected, the relay requires a reboot for the setting to be applied.*

Parallel Redundancy Protocol (PRP) operation: Ports 1 and 2 use the same MAC address and combine information at the link layer. It is intended to only be used if the two ports are connected to separate parallel LAN's. In this mode of operation, both ports cannot be connected to the same LAN. The receiving devices (8 Series) process the first frame received and discard the duplicate through a link redundancy entity (LRE) or similar service that operates below layer 2. Aside from LRE, PRP uses conventional Ethernet hardware but both ports must know they are in PRP. Ports of PRP devices operating with the same Internet Protocol (IP) addresses for traffic that uses IP Management protocols such as Address Resolution Protocol (ARP) must operate correctly.

Duplicate Discard mode: This is the normal setting for PRP operation and once set it allows the sender LRE to append a six-octet field that contains a sequence number, the Redundancy Control Trailer (RCT) to both frames it sends. The receiver LRE uses the sequence number of the RCT and the source MAC address to detect duplicates. It forwards only the first frame of a pair to its upper layers.

HSR operation: When set to HSR (High-availability Seamless Redundancy Protocol), PRT1 is paired with PRT2, or PRT4 is paired with PRT5. Each pair of ports use the same MAC address. In this mode, all the participating devices are connected in ring topology. In normal condition (fault-free state), both identical frames will reach the destination device within a certain interval. The first frame will be sent up the OSI stack to the destination application, while the second one will be discarded.

For more information, see the Communications Guide.

> *Note:*
> *NOTE: redundancy operations work in pairs Port1/2 and Port4/5 only. It is not interchangeable between all ports.*

> *Note:*
> *Always use Shielded Twisted Pair (STP) cable when connecting to RJ45 Ethernet ports*

6.5.8 ROUTING

When the configuration card is present, a default route and a maximum number of 6 static routes can be configured. The default route is used as the last choice, if no other route towards a given destination is found.

Path: *Setpoints* > *Device* > *Communications* > *Routing* > *Default Route*

GATEWAY ADDRESS

Range: Standard IPV4 unicast address format (0.0.0.1 to 223.255.255.254)

Default: 127.0.0.1

This setting sets the gateway of the default route to be used by IP traffic sent from the relay, if no other route towards a given IP destination is found.

This setting is available only if the communications card is present.

Path: *Setpoints* > *Device* > *Communications* > *Routing* > *Static RT1 (2 to 6)*

RT1 (2,3,4,5,6) DESTINATION

Range: Standard IPV4 network address format (0.0.0.1 to 223.255.255.254)

Default: 127.0.0.1

This setting sets the destination IPv4 route. This setting is available only if the communications card is present.

RT1 (2,3,4,5,6) MASK

Range: Standard IPV4 network mask format

Default: 255.0.0.0

This setting sets the IP mask associated with the route. This setting is available only if the communications card is present.

RT1 (2,3,4,5,6) GATEWAY

Range: Standard IPV4 unicast address format (0.0.0.1 to 223.255.255.254)

Default: 127.0.0.1

This setting sets the destination IP route. This setting is available only if the communications card is present.

RULES FOR ADDING AND DELETING STATIC ROUTES

1. By default, the value of the destination field is 127.0.0.1 for all static routes (1 to 6). This is equivalent to saying that the static routes are not configured. When the destination address is 127.0.0.1, the mask and gateway must also be kept as default values.
2. By default, the value of the default route gateway address is 127.0.0.1. This means the default route is not configured.
3. Use any of the static network route entries numbered 1 to 6 to configure a static network route. Once a route destination is configured for any of the entries 1 to 6, that entry becomes a static route and it must meet all the rules listed in *Important Notes* below.
4. To configure the default route, enter a default gateway address. A default gateway address configured must be validated against Rule #5, the next rule.
5. Routes are deleted by replacing the route destination with the default address (127.0.0.1). When deleting a route, the mask and gateway must also be put back to their default values.
6. The default route is deleted by replacing the default gateway with the default value 127.0.0.1.

Note:
Host routes are not supported at present.
The route mask has IPv4 mask format. In binary this is a set of contiguous bits of 1 from left to right, followed by one or more contiguous bits of 0.
The route destination and mask must match. This can be verified by checking that RtDestination & RtMask == RtDestination
This is an example of a good configuration: RtDestination= 10.1.1.0; Rt Mask= 255.255.255.0
This is an example of a bad configuration: RtDestination = 10.1.1.1; Rt Mask= 255.255.255.0
The route destination must not be a connected network.
The route gateway must be on a connected network. This rule applies to the gateway address of the default route as well. This can be verified by checking that: RtGwy & Prt4Mask) == (Prt4IP & Prt4Mask) || (RtGwy & Prt5Mask) == (Prt5IP & Prt5Mask)

TARGETS

Wrong Route Config

Description: A route with mismatched destination and mask has been configured.

Message: Wrong route configuration.

Solution: Rectify the IP address and mask of the mis-configured route.

TOPOLOGY

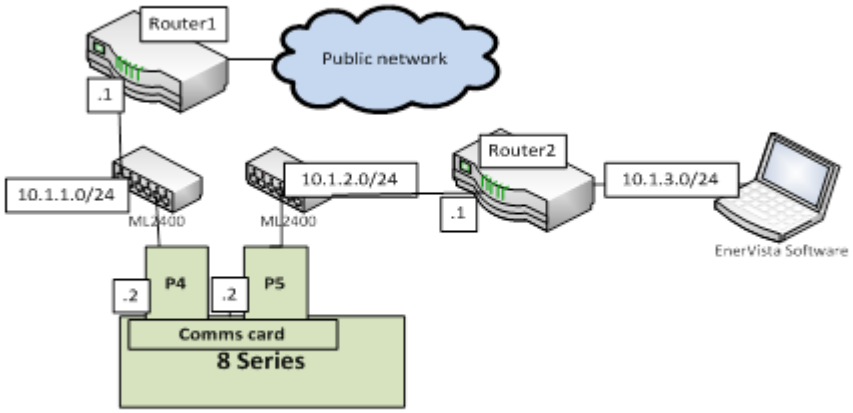

Figure 107: Topology Example

In the topology example above, the device is connected through the two Ethernet ports available on the communications card.

Note:
Always use Shielded Twisted Pair (STP) cable when connecting to RJ45 Ethernet ports

Port 4 (IP address 10.1.1.2) connects to LAN 10.1.1.0/24 and to the Internet through Router1. Router 1 has an interface on 10.1.1.0/24 and the IP address of this interface is 10.1.1.1.

Port 5 (IP address 10.1.2.2) connects to LAN 10.1.2.0/24 and to EnerVista D&I Setup software through Router 2. Router 2 has an interface on 10.1.2.0/24 and the IP address of this interface is 10.1.2.1.

Network addresses:

- PRT4 IP ADDRESS = 10.1.1.2
- PRT4 SUBNET IP MASK = 255.255.255.0
- PRT5 IP ADDRESS = 10.1.2.2
- PRT5 SUBNET IP MASK = 255.255.255.0

Routing Settings:

IPV4 DEFAULT ROUTE: GATEWAY ADDRESS = 10.1.1.1

STATIC NETWORK ROUTE 1: RT1 DESTINATION = 10.1.3.0/24RT1 NET MASK = 255.255.255.0RT1 GATEWAY = 10.1.2.1

Behavior:

One static network route was added to the destination 10.1.3.0/24, where a laptop running EnerVista D&I Setup software is located. This static route uses a different gateway (10.1.2.1) than the default route. This gateway is the address of Router 2, which is aware of destination 10.1.3.0 and is able to route packets coming from the device and destined to EnerVista D&I Setup software.

6.5.9 DNP PROTOCOL SETTINGS

Path: *Setpoints* > *Device* > *Communications* > *DNP protocol*

DNP CHANNEL 1(2) PORT

Range: None, Network - TCP, Network - UDP

Default: None

The ***DNP Channel 1 Port*** and ***DNP Channel 2 Port*** settings select the communications port assigned to the DNP protocol for each channel. When set to `Network - TCP`, the DNP protocol can be used over TCP/IP on channels 1 or 2. When set to `Network - UDP`, the DNP protocol can be used over UDP/IP.

DNP ADDRESS

Range: 0 to 65519 in steps of 1

Default: 65519

The DNP address sets the DNP slave address. This number identifies the device on a DNP communications link. Each DNP slave must be assigned a unique address.

DNP CLIENT ADDRESS 1(2)

Range: standard IP address

Default: 0.0.0.0

The DNP Client Address settings can force the device to respond to a maximum of two specific DNP masters.

DNP TCP/UDP PORT 1(2)

Range: 1 to 65535 in steps of 1

Default: 2000

> *Note:*
> ***DNP Channel 1 Port** will take the **DNP TCP/UDP Port 1** and **DNP Client Address 1** to allow/reject connections. The same relation is used by channel 2.*

DNP UNSOL RESP FUNCTION

Range: Enabled, Disabled

Default: Disabled

This setting will take effect for Ethernet communication only if the main card is present or a comms card is available in the device. This setting enables/disables the unsolicited response functionality. It is disabled for RS485 applications since there is no collision avoidance mechanism.

DNP UNSOL RESP TIMEOUT

Range: 0 to 60 s in steps of 1

Default: 5 s

Sets the time the relay waits for a DNP master to confirm an unsolicited response.

UNSOL RESP MAX RETRIES

Range: 1 to 255 in steps of 1

Default: 10

Sets the number of times the device retransmits an unsolicited response without receiving confirmation from the master; a value of `255` allows infinite re-tries.

UNSOL RESP AT STARTUP

Range: Enabled, Disabled

Default: Disabled

When relay is rebooting, unsolicited responses work without an Enable message needed, but this is only possible once the Master resets the communications with the relay. This happens with both Reset Link or Class 1 request messages.

DNP UNSOL RESP DEST ADDRESS

Range: 1 to 65519 in steps of 1

Default: 1

Sets the DNP address to which all unsolicited responses are sent. The IP address to which unsolicited responses are sent is determined by the device from the current TCP connection or the most recent UDP message.

DNP TIME SYNC IIN PERIOD

Range: 1 to 10080 min. in steps of 1

Default: 1440 min

This setting determines how often the Need Time Internal Indication (IIN) bit is set by the device. Changing this time allows the DNP master to send time synchronization commands more or less often, as required.

Note:
If the requirement for synchronization is more than a couple of seconds, consider synchronization via other means such as IRIG-B or 1588. Given network asymmetry, the consistency of the network latency, clock drift, and additional delays due to routers located between the client and the device all contribute error.

Note:
IRIG-B is not available for the 859

DNP MESSAGE FRAGMENT SIZE

Range: 30 to 2048 in steps of 1

Default: 240

This setting determines the size, in bytes, at which message fragmentation occurs. Large fragment sizes allow for more efficient throughput; smaller fragment sizes cause more application layer confirmations to be necessary which can provide for more robust data transfer over noisy communication channels.

DNP OBJECT DEFAULT VARIATION SETTINGS

These settings allow selection of the DNP default variation number for object types 1, 2, 20, 21, 22, 23, 30, and 32. The default variation refers to the variation response when variation 0 is requested and/or in class 0, 1, 2, or 3 scans. The DNP binary outputs typically map one-to-one to IED data points. That is, each DNP binary output controls a single physical or virtual control point in an IED. In the 8 Series relay, DNP binary outputs are mapped to virtual inputs. See below for details

DNP OBJECT 1(2) DEFAULT VARIATION

Range: 1, 2

Default: 2

DNP OBJECT 20(22) DEFAULT VARIATION

Range: 1, 2, 5, 6

Default: 1

DNP OBJECT 21 DEFAULT VARIATION

Range: 1, 2, 9, 10

Default: 1

DNP OBJECT 23 DEFAULT VARIATION

Range: 1, 2, 5, 6

Default: 2

DNP OBJECT 30 DEFAULT VARIATION

Range: 1, 2, 3, 4, 5

Default: 1

TCP CONNECTION TIMEOUT

Range: 10 to 300 s in steps of 1

Default: 120 s

This setting specifies a time delay for the detection of dead network TCP connections. If there is no data traffic on a DNP TCP connection for greater than the time specified by this setting, the connection will be aborted.. This frees up the connection to be re-used by a client.

6.5.10 DNP AND IEC104 POINT LISTS

The menu path for the DNP/IEC104 point lists is shown below.

Path: ***Setpoints*** > ***Device*** > ***Communications*** > ***DNP/IEC104 Point Lists***

Binary Input/MSP Points

Analog Input/MME Points

Binary Outp/CSC/CDC Pnts

Binary input points (DNP) or MSP points (IEC 60870-5-104)

You can configure the binary inputs points for the DNP protocol, or the MSP points for IEC 60870-5-104 protocol to a maximum of 96 points. The data source for each point is user-programmable and can be configured by assigning FlexLogic operands. For a complete list, see Format Code FC142.

The menu path for the binary input points (DNP) or MSP points (IEC 60870-5-104) is shown below.

Path: ***Setpoints*** > ***Device*** > ***Communications*** > ***DNP/IEC104 Point Lists*** > ***Binary Input/MSP Points***

Point 0 Entry

...

Point 255 Entry

Analog input points (DNP) or MME points (IEC 60870-5-104)

You can configure up to 255 analog input points for the DNP or IEC 60870-5-104 protocols. The menu path for the analog input point (DNP) or MME points (IEC 60870-5-104) is shown below.

Path: ***Setpoints*** > ***Device*** > ***Communications*** > ***DNP/IEC104 Point Lists*** > ***Analog Input / MME Points***

Analog IP Point 0 Entry

Point 0 Scale Factor

Point 0 Deadband

DNP ANALOG INPUT POINT 0(255) SCALE FACTOR

Range: / 0.001, / 0.01, / 0.1, / 1, / 10, / 100, / 1000, / 10000, / 100000

Default: /1

These are numbers used to scale analog input point values. Each setting represents the scale factor for the analog input point. For example, if the ***DNP PHASE A VOLTAGE SCALE FACTOR*** setting is set to `/ 1000`, and the Phase A voltage is 72000 V, the Phase A voltage sent on to the relay is 72 V. The settings are useful when analog input values must be adjusted to fit within certain ranges in DNP masters.

> *Note:*
> *A scale factor of `/ 0.1` is equivalent to a multiplier of 10.*

DNP ANALOG INPUT POINT 0(255) DEADBAND

Range: 1 to 100000000 in steps of 1

Default: 30000

The setting is the threshold value to define the condition to trigger unsolicited responses containing analog input data. Each setting represents the default deadband value for the associated analog input. For example, to trigger unsolicited responses from the relay when phase A current changes by 15 A, the DNP Current Deadband for Phase A current should be set to `15`. Note that these settings are the deadband default values. DNP object 34 points can be used to change deadband values from the default for each individual DNP analog input point. Whenever power is removed and re-applied, the new deadbands are in effect.

Binary output points (DNP) or CSC/CDC points (IEC 60870-5-104)

You can configure the binary output points for the DNP protocol, or the CSC/CDC points for IEC 60870-5-104 protocol to a maximum of 16 points. The data source for each point is user-programmable and can be configured by

assigning FlexLogic operands. The menu path for the binary output points (DNP) or CSC/CDC points (IEC 60870-5-104) is shown below.

Path: ***Setpoints*** > ***Device*** > ***Communications*** > ***DNP/IEC104 Point Lists*** > ***Binary Output / CSC/CDC Points***

Binary Output Point 0 ON

Binary Output Point 0 OFF

...

Binary Output Point 31 ON

Binary Output Point 31 OFF

> *Note:*
> *The DNP/IEC 60870-5-104 point lists always begin with point 0 and end at the first `Off` value. Since DNP / IEC 60870-5-104 point lists must be in one continuous block, any points assigned after the first `Off` point are ignored.*

BINARY INPUT POINTS

The DNP binary input data points are configured through the **DNP/IEC104 POINT LISTS BINARY INPUT/MSP POINTS** menu. When a freeze function is performed on a binary counter point, the frozen value is available in the corresponding frozen counter point.

- Static (Steady-State) Object Number: **1**
- Change Event Object Number: **2**
- Request Function Codes supported: **1 (read), 22 (assign class)**
- Static Variation reported when variation 0 requested: **2 (Binary Input with status), Configurable**
- Change Event Variation reported when variation 0 requested: **2 (Binary Input Change with Time), Configurable**
- Change Event Scan Rate: **8 times per power system cycle**
- Change Event Buffer Size: **1024**
- Default Class for All Points: **1**

POINT NAME/DESCRIPTION COUNTERS

The following details lists both Binary Counters (Object 20) and Frozen Counters (Object 21). When a freeze function is performed on a Binary Counter point, the frozen value is available in the corresponding Frozen Counter point. Digital Counter values are represented as 16 or 32-bit integers. The DNP 3.0 protocol defines counters to be unsigned integers. Care should be taken when interpreting negative counter values.

BINARY COUNTERS

- Static (Steady-State) Object Number: **20**
- Change Event Object Number: **22**
- Request Function Codes supported: **1 (read), 7 (freeze), 8 (freeze noack), 9 (freeze and clear), 10 (freeze and clear, noack), 22 (assign class)**
- Static Variation reported when variation 0 requested: **1 (32-Bit Binary Counter with Flag)**
- Change Event Variation reported when variation 0 requested: **1 (32-Bit Counter Change Event without time)**
- Change Event Buffer Size: **10**
- Default Class for all points: **3**

FROZEN COUNTERS

- Static (Steady-State) Object Number: **21**
- Change Event Object Number: **23**
- Request Function Codes supported: **1 (read)**
- Static Variation reported when variation 0 requested: **1 (32-Bit Frozen Counter with Flag)**
- Change Event Variation reported when variation 0 requested: **1 (32-Bit Counter Change Event without time)**
- Change Event Buffer Size: **10**
- Default Class for all points: **3**

BINARY AND FROZEN COUNTERS POINT INDEX NAME/DESCRIPTION

- 0 Digital Counter 1
- 1 Digital Counter 2
- 2 Digital Counter 3
- 3 Digital Counter 4
- 4 Digital Counter 5
- 5 Digital Counter 6
- 6 Digital Counter 7
- 7 Digital Counter 8
- 8 Digital Counter 9
- 9 Digital Counter 10
- 10 Digital Counter 11
- 11 Digital Counter 12
- 12 Digital Counter 13
- 13 Digital Counter 14
- 14 Digital Counter 15
- 15 Digital Counter 16

ANALOG INPUTS

It is important to note that 16-bit and 32-bit variations of analog inputs are transmitted through DNP as signed numbers. Even for analog input points that are not valid as negative values, the maximum positive representation is 32767 for 16-bit values and 2147483647 for 32-bit values. This is a DNP requirement. The deadbands for all Analog Input points are in the same units as the Analog Input quantity. For example, an Analog Input quantity measured in volts has a corresponding deadband in units of volts. Relay settings are available to set default deadband values according to data type. Deadbands for individual Analog Input Points can be set using DNP Object 34.

A default variation refers to the variation response when variation 0 is requested and/or in class 0, 1, 2, or 3 scans. The default variations for object types 1, 2, 20, 21, 22, 23, 30, and 32 are selected via relay settings. This optimizes the class 0 poll data size.

For static (non-change-event) objects, qualifiers 17 or 28 are only responded when a request is sent with qualifiers 17 or 28, respectively. Otherwise, static object requests sent with qualifiers 00, 01, 06, 07, or 08, are responded with qualifiers 00 or 01. For change event objects, qualifiers 17 or 28 are always responded.

Cold restarts are implemented the same as warm restarts – the relay is not restarted, but the DNP process is restarted.

6.5.11 IEC60870-5-104

The IEC 60870-5-104 communications protocol is supported on Ethernet ports 4 and 5 only. Setting changes become active after rebooting.

> *Note:*
> *Both DNP and IEC104 protocol can work at the same time, but consider that there is only one point map. So, the two protocols use the same data mapping, i.e., same point index and same point source.*
> *The relay supports up to two IEC104 client connections simultaneously.*

Path: ***Setpoints*** > ***Device*** > ***Communications*** > ***IEC 60870-5-104***

Channel 1 Port

Channel 2 Port

Common Address of ASDU

Client Address 1

Client Address 2

TCP Port Number 1

TCP Port Number 2

Cyclic Data Period

Object Info Addrs Bnry

Object Info Addrs Analog

Object Info Addrs Countrs

Object Info Addrs Cmnd

Object Info Analog Param

By default the Object Information Address for the different data is as follows:

M_SP (Single Points) = 1000

M_ME (Measured value) = 2000

M_IT (Integrated Totals) = 3000

C_SC or C_DC (Single or Double Command) = 4000

P_ME_NB (Parameter of measured value) = 5000

Each Measured value has a Parameter of measured value (P_ME_NB) associated to its threshold.

The IEC 60870-5-104 Deadbands settings are used to determine when to trigger spontaneous responses containing M_ME_NB_1 analog data. Each setting represents the threshold value for each M_ME_NB_1 analog point.

For example, to trigger spontaneous responses when a current value changes by 15 A, the ***Analog Point xx Deadband*** setting should be set to `15`. Note that these settings are the default values of the deadbands. P_ME_NB_1 (parameter of measured value, scaled value) points can be used to change threshold values, from the default, for each individual M_ME_NB_1 analog point. There are three ways to send the measurands to the Master station. The measurands are part of the General Group and Group 2, so when a general interrogation or group 2 interrogation takes place all the measurands are included in the response. Also, there is a cyclic data period setting where it is configured in the scan period to send the measurands to the Master. And the last way, is by sending spontaneously when a deadband overflow takes place. The IEC104 Channels sub-menu information is shown below.

Commands are executed over the Binary Outputs. The first 8 Binary Outputs are configured to receive Select/Operate Commands and the next 8 Binary Outputs are configured to receive Direct Execute Commands.

The ***IEC104 CHANNEL 1 PORT*** and ***IEC104 CHANNEL 2 PORT*** settings select the communications port assigned to the IEC104 protocol for each channel. When this setting is set to `Network - TCP`, the IEC104 protocol can be used over TCP/IP on channels 1 or 2. The ***IEC104 NETWORK CLIENT ADDRESS*** settings can force the relay to

respond to a maximum of two specific IEC104 masters which own the configured IP Addresses. The settings in this sub-menu are shown below.

> *Note:*
> ***IEC104 CHANNEL 1 PORT** takes the **Port Number 1** and **Client Address 1** to allow or reject connections. The same method is used by channel 2.*

GROUPS OF DATA

The data is organized into groups in order to provide values when the controlling station requests them by a general or group interrogation.

Group 1 is set by the 96 Single Points (M_SP).

Group 2 is set by the 32 Measured values (M_ME).

Group 3 is set by the 32 Measured thresholds (P_ME).

These 96 Single Points and 32 Measured Values are also sent as a response to a General Interrogation.

The Integrated Totals (M_IT) has its own Counter Group 1, and it is sent as a response to a General Request Counter.

6.5.12 IEC60870-5-103

The point map for the 103 is different from the one shared by the IEC104 and DNP protocols. IEC 60870-5-103 serial communications protocol is supported on the rear RS485 port only.

The DNP, IEC 103 and Modbus cannot be enabled simultaneously. Only one instance of DNP 3.0, IEC 103 or Modbus can run on the RS485 serial port.

Path: *SETPOINTS* > *DEVICE* > *COMMUNICATIONS* > *IEC 60870-5-103 PROTOCOL*

IEC103 Common ASDU Addrs

Range: 0 to 254 in steps of 1

Default: 0

IEC103 Sync Timeout

Range: 0 to 1440 minutes in steps of 1 min

Default: 0 min

All binary inputs are configured from FlexLogic operands. For a complete list, see Format Code FC142.

> *Note:*
> *Pay attention when configuring the function type and information number of the different points, because they must be unique. There is no mechanism in the EnerVista D&I Setup software or the front panel HMI to detect duplication of the information index.*
> *The IEC 60870-5-103 point lists always begin with point `0` and end at the first `Off` value. Since IEC 60870-5-103 point lists must be in one continuous block, any points assigned after the first `Off` point are ignored.*

6.5.13 IEC 103 POINT LISTS

6.5.13.1 BINARY INPUT POINTS

SETPOINTS* > *DEVICE* > *COMMUNICATIONS* > *IEC 103 POINTS LISTS* > *BINARY INPUTS

Point [x] Func Type

Range: 0 to 255

Default: 0

Point [x] Info Num

Range: 0 to 255

Default: 0

Point [x]

Range: Off, On, No, Yes, Cl 1 on, Cl 2 on, Cl 3 on, Cl 4 on,

Default: Off

Present in Gen Interrogation

Range: No, Yes

Default: No

6.5.13.2 MEASURANDS

SETPOINTS* > *DEVICE* > *COMMUNICATIONS* > *IEC 103 POINTS LISTS* > *IEC 103 MEASURANDS

There are five ASDUs: First ASDU, Second ASDU, Third ASDU, fourth ASDU and Fifth ASDU. Each ASDU has the following settings for up to nine instances for each ASDUach of the following settings are applicable only to to the selected ASDU:

nth ASDU Ident type

Range: 3, 9

Default: 3

nth ASDU Func Type

Range: 0 to 255

Default: 0

nth ASDU Info Num

Range: 0 to 255

Default: 0

nth ASDU Scan Timeout

Range: 0 to 100 seconds

Default: 0 s

Each of the following settings are common to all instances

nth Analog Entry

Range: Off, [Protection function]

Default: off

nth Analog Factor

Range: 0.000 to 65.535

Default: 0.000

nth Analog Offset

Range: -32768 to 32767

Default: 0

6.5.13.3 COMMANDS

SETPOINTS* > *DEVICE* > *COMMUNICATIONS* > *IEC 103 POINTS LISTS* > *COMMANDS

There are 32 instances of commands: Commands 0 to Commands 31

Command [x] Func Type

Range: 0 to 255

Default: 0

Command [x] Info Num

Range: 0 to 255

Default: 0

Command [x] ON

Range: OFF, [options]

Default: OFF

Command [x] OFF

Range: OFF, [Breaker and Switch open close options, Virtual input options]

Default: OFF

6.5.14 IEC 103 DISTURBANCE RECORDER

SETPOINTS* > *DEVICE* > *COMMUNICATIONS* > *IEC103 DISTURBANCE RECORDER* > *DIGITAL CHANNEL 1(64)

There are 64 digital channels, each with the following settings:

FUNC TYPE

Range: 0 to 255

Default: 0

INFO NUM

Range: 0 to 255

Default: 0

6.5.15 GOOSE SUBSCRIBE

6.5.15.1 REMOTE INPUTS

SETPOINTS > ***DEVICE*** > ***COMMUNICATIONS > GOOSE SUBSCRIBE > REMOTE INPUTS***

There are 256 remote inputs, each with the following settings:

NAME

Range: Up to 13 alphanumeric characters

Default RI [x]

DEFAULT STATE

Range: Off, On, Latest/Off, Latest/On

Default: Off

EVENTS

Range: Disabled, Enabled

Default: Enabled

6.5.15.2 REMOTE INPUTS DPS

SETPOINTS > ***DEVICE*** > ***COMMUNICATIONS > GOOSE SUBSCRIBE > REMOTE INPUTS DPS***

There are 16 remote inputs, each with the following settings:

NAME

Range: Up to 13 alphanumeric characters

Default RI DPS [x]

DEFAULT STATE

Range: Intermediate, Off, On, Bad State, Latest

Default: Latest

6.5.15.3 GOOSE ANALOG

Range: Up to 13 alphanumeric characters

*Default: Blank****SETPOINTS*** > ***DEVICE*** > ***COMMUNICATIONS > GOOSE SUBSCRIBE > GOOSE ANALOG***

Float settings (1 to 24)

FLOAT NAME

Range: Up to 13 alphanumeric characters

Default GOOSE Float[x]

FLOAT ID

Range: Up to 13 alphanumeric characters

Default: Blank

DEFAULT MODE

Range: Default value, Last known

Default: Default Value

DEFAULT VALUE

Range: -10000000.000 to 10000000.000

Default: 1000.000

UNITS

Range: Up to 13 alphanumeric characters

Default: Blank

PU BASE

Range: 0.001 to 10000000.000

Default: 1.000

SINT32 settings (1 to 8)

SINT32 NAME

Range: Up to 13 alphanumeric characters

Default: GOOSE Sint [x]

SINT32 ID

Range: Up to 13 alphanumeric characters

Default: Blank

DEFAULT MODE

Range: Default value, Last known

Default: Default Value

DEFAULT VALUE

Range: -10000000.000 to 10000000.000

Default: 1000

UNITS

Range: Up to 13 alphanumeric characters

Default: Blank

PU BASE

Range: 0.001 to 10000000.000

Default: 1.000

6.5.16 IEC 61850 MMS

SETPOINTS* > *DEVICE* > *COMMUNICATIONS* > *IEC61850 MMS

MMS PROTOCOL

Range: Disabled, Enabled

Default: Enabled

6.5.17 TFTP

SETPOINTS* > *DEVICE* > *COMMUNICATIONS* > *TFTP

TFTP Protocol

Range: Disabled, Enabled

Default: Enabled

6.5.18 SFTP/SSH

SETPOINTS* > *DEVICE* > *COMMUNICATIONS* > *SFTP/SSH

SFTP/SSH

Range: Disabled, Enabled

Default: Enabled

6.5.19 SNMP

The Simple Network Management Protocol (SNMP) is a network protocol designed to manage devices in an IP network.The SNMP system consists of an agent, a manager and the communication protocol between agent and manager. 8-series relays implement the SNMP agent functionality to provide SNMP services to the SNMP manager. The SNMP manager is the client and is not in the scope of this specification.

SNMP implementation uses UDP as the transport protocol. The SNMP agent running in the device, uses port 161 to process SNMP manager's request. For the SNMP agent to report the trap messages, SNMP manager uses port 162. SNMPv2c and SNMPv3 both use UDP and the same port. SNMPv2c provides a security mechanism via the use of a community name in plain text. An SNMP Read-Only Community String is implemented in the device, which is like a user id or password that is sent along with each SNMP Get-Request. SNMPv3 uses User-based Security Model (USM) and provides security via authentication and privacy. SNMPv3 uses HMAC-MD5-96 and HMAC-SHA-96 as the authentication protocols and uses Cipher Block Chaining Data Encryption Standard (CBC-DES) symmetric encryption protocol as the privacy protocol.

SNMP Protocol Operations	Supported by product?
GET REQUEST	YES
GET NEXT REQUEST	YES
GET RESPONSE	YES
SET REQUEST	NO
TRAP	YES
GETBULK REQUEST	YES
INFORM	NO

Note:
A full list of supported SNMP services are listed in RFC1905 for SNMPv2c and RFC3416 for SNMPv3.

Path: *Device* > *Communications* > *SNMP*

SNMP FUNCTION

Range: Disabled, Enabled

Default: Disabled

This setting enables and disables the SNMP functionality. When set to Disabled, SNMP services are disabled. When set to enabled, SNMP services are enabled and MIBs are reported to SNMP client.

SNMP VERSION

Range: V3, V2C

Default: V3

This setting specifies the SNMP version to be used.

TRAP DEST. IP1

Range: 0.0.0.0 to 223.255.255.254 in steps of 1

Default: 0.0.0.0

This is the Trap destination IP for the SNMP interface, which needs to be set to the SNMP manager IP address. Setting this cell to 0.0.0.0 disables the Trap interface.

TRAP DEST. IP2

Range: 0.0.0.0 to 223.255.255.254 in steps of 1

Default: 0.0.0.0

This is the Trap destination IP for the SNMP interface, which needs to be set to the SNMP manager IP address. Setting this cell to 0.0.0.0 disables the Trap interface.

COMMUNITY NAME

Range: 8 ACSII characters

Default: AAAAAAAA

This is the SNMP v2c community name setting, used for authentication between the SNMP manager and the relay. The community name must be the same in both the SNMP Manager and the IED.

USER NAME

Range: 16 ACSII characters

Default: ReadOnlyUserName

This setting is the SNMP v3 user name.

SECURITY LEVEL

Range: NoAuthNoPriv, AuthNoPriv, AuthPriv

Default: AuthNoPriv

This represents the SNMP v3 security level. The levels of security are defined by the SNMP standard: 0 - Without authentication and without privacy (NoAuthNoPriv) 1 - With authentication but without privacy (AuthNoPriv) 2 - With authentication and with privacy (AuthPriv) Authentication is used to check the identity of users. Privacy allows for encryption of SNMP messages.

AUTH PROTOCOL

Range: HMAC-MD5-96, HMAC-SHA-96

Default: HMAC-MD5-96

This is the SNMP v3 Authentication Protocol, which sets the hash-based message authentication code function used for the authentication of messages. MD5 - Message Digest implementationSHA - Secure Hash Algorithm implementationSHA is considered cryptographically stronger than MD5 but takes a longer time to compute. Both implementations are considered secure. The SNMP Manager and the IED must use the same Authentication Protocol.

AUTH PASSWORD

Range: 8 ACSII characters

Default: AAAAAAAA

The setting used for the SNMP v3 Authentication Password.

ENCRYPT PROTOCOL

Range: CBC-DES

Default: CBC-DES

This is the SNMP v3 encryption protocol, which is a read-only setting.

ENCRYPT PASSWORD

Range: 8 ACSII characters

Default: BBBBBBBB

This is the SNMP v3 encryption protocol, which is a read-only setting.

6.5.19.1 SNMP MIB

SNMP uses a Management Information Base (MIB), which contains information about parameters to supervise. The MIB format is a tree structure, with each node in the tree identified by a numerical Object Identifier (OID). Each OID identifies a variable that can be read using SNMP with the appropriate software. The information in the MIB is standardized. Each device in a network (workstation, server, router, bridge, etc.) maintains a MIB that reflects the status of the managed resources on that system, such as the version of the software running on the device, the IP address assigned to a port or interface, the amount of free hard drive space, or the number of open files. The MIB does not contain static data, but is instead an object-oriented, dynamic database that provides a logical collection of managed object definitions. The MIB defines the data type of each managed object and describes the object.The following table lists all the MIB points and the data sources mapping. The data source mapping may differ between products.

Address				Name	Trigger Map
1.3.6.1.4.1.13248.				OID Prefix	
	1			8 Series	
		1		System Data	
			1	Model Number	No
			2	Serial Number	No
			3	Software Revision	No
			4	Frequency	No
		2		Date and Time	
			1	Date Time	No
			2	IRIG-B Status (not for 859)	Yes
			3	Active Sync Source	Yes

Address				Name	Trigger Map
			5	SNTP Server 1	No
			6	SNTP Server 2	No
			7	SNTP Status	Yes
			8	PTP Status	Yes
		3		System Alarms	
			1	Settings File Rejected	Yes
			2	Major Error	Yes
			3	Minor Error	Yes
			4	Port 4 Fails	Yes
			5	Port 5 Fails	Yes
			6	SNTP Failure	Yes
			7	PTP Failure	Yes
			8	IRIG-B Failure (not for 859)	Yes
			9	Device Out Of Service	Yes
		4		Device Mode	
			1	IED Mod/Beh	Yes
			2	Simulation Mode of Subscription	Yes

SNMPv3 SNMP-USER-BASED-SM-MIB

When the SNMP version is set to **V3**, SNMP client can access **MIB SNMP-USER-BASED-SM-MIB** as defined in RFC3414. When the version is set to **V2C**, this MIB is not accessible. SNMPv3 must implement this MIB to satisfy USM conformance statement if SNMPv3 adopts USM as its security model. The following table shows the SNMP user-based security model MIB.

Address						Name	Trigger Map
1.3.6.1.6.3.15						snmpUsmMIB	
	1					usmMIBObjects	
		1				usmStats	
			1			usmStatsUnsupportedSecLevels	No
			2			usmStatsNotInTimeWindows	No
			3			usmStatsUnknownUserNames	No
			4			usmStatsUnknownEngineIDs	No
			5			usmStatsWrongDigests	No
			6			usmStatsDecryptionErrors	No
		2				usmUser	
			1			usmUserSpinLock	No
			2			usmUserTable	
				1		usmUserEntry	

Address						Name	Trigger Map
					1	usmUserEngineID	No
					2	usmUserName	No
					3	usmUserSecurityName	No
					4	usmUserCloneFrom	No
					5	usmUserAuthProtocol	No
					6	usmUserAuthKeyChange	No
					7	usmUserOwnAuthKeyChange	No
					8	usmUserPrivProtocol	No
					9	usmUserPrivKeyChange	No
					10	usmUserOwnPrivKeyChange	No
					11	usmUserPublic	No
					12	usmUserStorageType	No
					13	usmUserStatus	No

The below table shows the SNMP MIB for PRP:

Address												Name
0												ITU
	1											ISO
		0										Standard
			62439									IECHighavailibility
				3								PRP
					1							linkRedundancyEntityObjects
						0						lreConfiguration
							0					lreConfigurationGeneralGroup
								1				lreManufacturerName
								2				lreInterfaceCount
							1					lreConfigurationInterfaceGroup
								0				lreConfigurationInterfaces
									1			lreInterfaceConfigTable
										1		lreInterfaceConfigEntry
											1	lreInterfaceConfigIndex
											2	lreRowStatus
											3	lreNodeType
											4	lreNodeName
											5	lreVersionName
											6	lreMacAddressA
											7	lreMacAddressB

Address												Name
											8	lreAdapterAdminStateA
											9	lreAdapterAdminStateB
											10	lreLinkStatusA
											11	lreLinkStatusB
											12	lreDuplicateDiscard
											13	lreTransparentReception
											14	lreHsrLREMode
											15	lreSwitchingEndNode
											16	lreRedBoxIdentity
											17	lreSanA
											18	lreSanB
											19	lreEvaluateSupervision
											20	lreNodesTableClear
											21	lreProxyNodeTableClear
						1						lreStatistics
							1					lreStatisticsInterfaceGroup
								0				lreStatisticsInterfaces
									1			lreInterfaceStatsTable
											1	lreInterfaceStatsIndex
											2	lreCntTotalSentA
											3	lreCntTotalSentB
											4	lreCntErrWrongLANA
											5	lreCntErrWrongLANB
											6	lreCntReceivedA
											7	lreCntReceivedB
											8	lreCntErrorsA
											9	lreCntErrorsB
											10	lreCntNodes
											11	lreOwnRxCntA
											12	lreOwnRxCntB
									3			lreProxyNodeTable
										1		lreProxyNodeEntry
											1	reProxyNodeIndex
											2	reProxyNodeMacAddress

6.5.20 IEC 61850

The optional communications processor supports both the IEC 61850 GOOSE and IEC 61850 MMS Server service as per IEC 61850 standard Ed. 2. The GOOSE messaging service provides the ability for the relay to Publish/ Subscribe Digital Input and other element statuses and its Quality and Timestamp to/from other IEDs with supporting GOOSE messaging service. Server support allows remote control center, RTU/Gateway, local HMI or other client role devices access to the relay for monitoring and control. The configuration of IEC 61850 services is accomplished using the EnerVista D&I Setup software.

The IEC 61850 Server (i.e. the relay) reports information to the IEC 61850 Client, such as the Local HMI, RTU and Gateway. This information consists of logical device data, data sets, data control block, logical nodes and their data attributes.

Appendix B lists the implementation details of IEC 61850, including the logical nodes and number of instances for each that are supported..

Data Obj	data attribute	Type	FC	Name	Description
PhyHealth		ENS			This physical device's health
	stVal	ENUMERATED	ST		3 when ANY MAJOR ERROR ==On; 2 when ANY MINOR ERROR==On; 1 otherwise

6.5.20.1 IEC61850 CONFIGURATOR

The relay supports the IEC 61850 protocol, which is an order code option.

The IEC 61850 configurator is found in both the online and offline section of the EnerVista D&I Setup software for configuring the online and offline settings file respectively.

ONLINE SETTINGS FILE

Two options are available to configure the relay's online settings file.

1. Configuration
   - Configure the device through the Device Setup or Quick connect screen.
   - The IEC 61850 Configurator item is displayed after Maintenance.

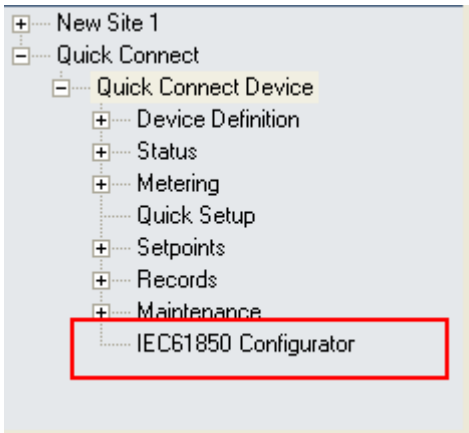

   - Launch the online IEC 61850 configurator screen, by double-clicking on **IEC61850 Configurator**.
   - Select the required settings from the different tab displays (in the configurator screen) to complete the IEC 61850 configuration.
2. Online right-click option
   - Select any online relay and right click on the selected item. More options become available for selection, as described below.

ADDITIONAL OPTIONS

Generate ICD file: The menu option generates a default ICD file with the respective order code option and saves the file to the path selected previously.

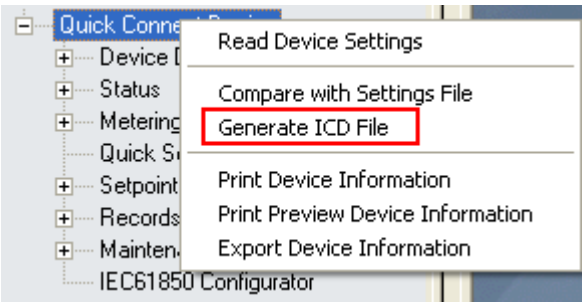

Read Device Settings: The menu option reads all the settings from the relay by TFTP and creates a file with extension *.CID. The created *.CID file consists of two sections. A private section where all non IEC 61850 settings are available, and a public section in which IEC 61850 related settings are implemented.

When creating a CID file using a 3rd party ICT/SCL tool, ensure the following:

- The order code in the CID file must match the device order code if writing the CID file directly into the relay. The ***Desc*** value in communication settings of the CID file must match the relay's order code.
- The maximum allowed services must be equal or below the specified limits as in ICD/CID.
- Configure Datasets only in LLN0 logical node.
- Creating new LD, LN, and communication-AP settings is not recommended.

OFFLINE SETTINGS FILE

The **Generate ICD File** menu option generates a default ICD file with the respective order code option and saves the file to the path selected previously.

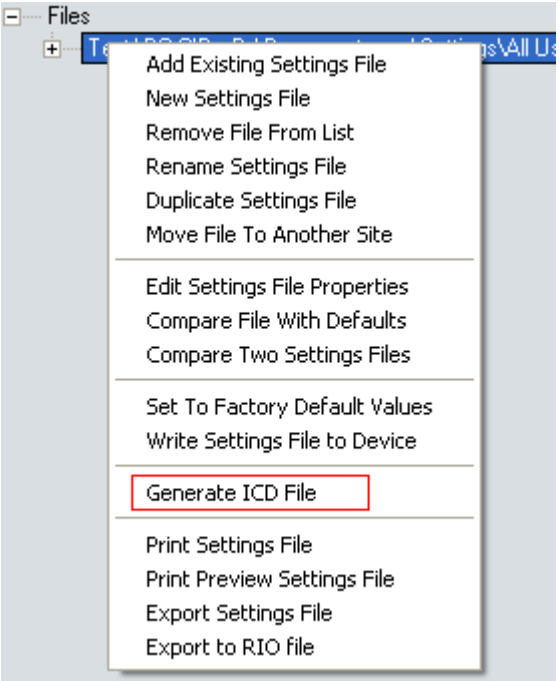

IEC 61850 CONFIGURATOR DETAILS

The IEC61850 Configurator allows editing of all sections of the IEC 61850 CID and ICD file. No other operations can be performed in the EnerVista D&I Setup software if the IEC61850 Configurator is open. Close the IEC 61850 session to perform other operations.

Note:
*When the IEC 61850 configuration is saved while online, the **DEVICE IN SERVICE** state (**Setpoints** > **Device** > **Installation**) switches to `Not Ready` for the duration of the upload. This ensures that all new settings are applied before the device is operational.*

The IEC61850 Configurator for firmware V4.1 and later consists of these items in the hierarchy menu.

- Access Point Addressing
- Settings
- DataSets
- Reports
- GOOSE

:

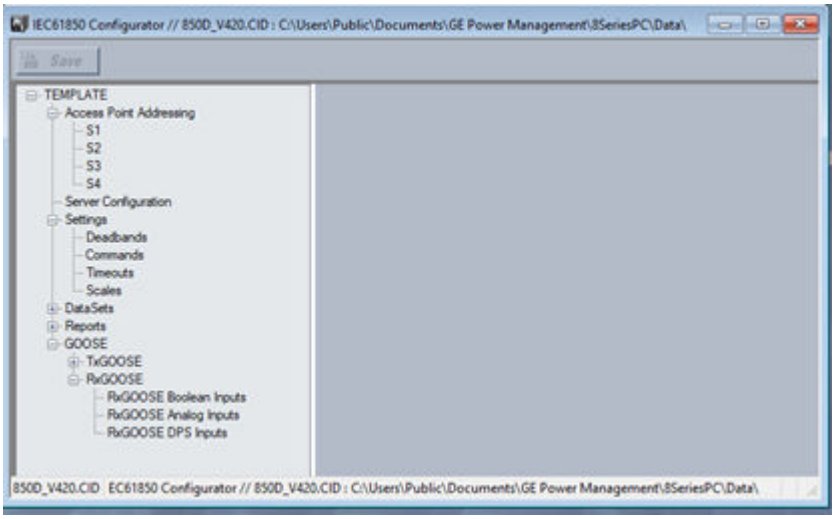

6.6 TRANSIENT RECORDER

The Transient Recorder contains waveforms captured at the same sampling rate as the other relay data at the point of trigger. By default, data is captured for all AC current and voltage inputs available on the relay as ordered. Transient record is generated upon change of state of at least one of the assigned triggers: ***Trigger Source***, ***Trigger on Any Pickup***, ***Trigger on Any Operate***, ***Trigger on Alarm***, or ***Trigger on Trip***.

The number of cycles captured in a single transient record varies based on the number of records, sample rate, and the number of selected channels. There is a fixed amount of data storage for the Transient Recorder: the more data captured, the less the number of cycles captured per record.

Path: ***Setpoints*** > ***Device*** > ***Transient Recorder***

NUMBER OF RECORDS

Range: 1 to 16 in steps of 1

Default: 5

The selection from the range defines the desired number of records.

SAMPLES PER CYCLE

Range: 8/c, 16/c, 32/c, 64/c, 128/c

Default: 32/c

This setpoint provides a selection of samples-per-cycle for representing the waveform. The waveform records can be viewed using the EnerVista D&I Setup software software.

TRIGGER MODE

Range: Overwrite, Protected

Default: Overwrite

When `Overwrite` setting is selected, the new records overwrite the old ones, meaning the relay will always keep the newest records as per the selected number of records. In `Protected` mode, the relay will keep the number of records corresponding to the selected number of records, without saving further records that are beyond the selected number of records.

TRIGGER POSITION

Range: 0 to 100% in steps of 1%

Default: 20%

This setting indicates the location of the trigger with respect to the selected length of record. For example at 20% selected trigger position, the length of each record will be split on 20% pre-trigger data, and 80% post-trigger data.

TRIGGER SOURCE:

Range: Off, Any FlexLogic operand

Default: Off

The trigger source can be any digital input: an operand from the list of FlexLogic operands, a contact input, a contact output, a virtual input or output, or a remote input or output.

TRIGGER ON ANY PICKUP

Range: On, Off

Default: Off

Selection of `On` enables triggering of the recorder upon pickup condition detected by any of the protection or control elements.

TRIGGER ON ANY OPERATE

Range: On, Off

Default: Off

Selection of `On` enables triggering of the recorder upon operate state of any of the enabled protection or control elements.

TRIGGER ON TRIP

Range: On, Off

Default: Off

Selecting the `On` setting enables triggering of the recorder when any of the protection elements configured as a `Trip` function operates, or the state of the operand assigned to operate the #1 Trip output relay changes to High.

TRIGGER ON ALARM

Range: On, Off

Default: Off

Selecting `On` setting enables triggering of the recorder when any of the protection elements configured as `Alarm`, or `Latched Alarm` function operates, or the state of the operand assigned to trigger the Alarm LED changes to High.

DIGITAL INPUT 1 to 64

Range: Off, Any FlexLogic operand

Default: Off

ANALOG INPUT 1 to 16

Range: Off, Any FlexLogic analog parameter

Default: Off

Note:
A consecutive transient record cannot be triggered until the first record has been completed.

6.7 DATA LOGGER

The data logger samples and records up to 16 analog parameters at a configured rate. All data is stored in non-volatile memory, where the information is retained upon a relay control power loss.

The data logger can be configured with a few channels over a long period of time, or with larger number of channels for a shorter period of time. The relay automatically partitions the available memory between the channels in use.

The selection of the rate for logging data also affects the duration of recorded data. The data logger has longer duration for sampling rates at longer periods of time (i.e. 1 minute, 30 minutes, 1 hour), as compared to sampling rates at short periods (i.e. per cycle, or per second).

The recorded data can be downloaded to EnerVista D&I Setup software and displayed with parameters on the vertical axis and time on the horizontal axis.

> *Note:*
> *If data is not available for the entire duration of pre-trigger, the trigger position will be based on available pre-trigger.*

Path: ***Setpoints*** > ***Device*** > ***Data Logger***

FUNCTION

Range: Disabled, Continuous, Triggered

Default: Continuous

This setting configures the mode in which the data logger operates. When set to `Continuous`, the data logger actively records any configured channels at the rate defined in the Data Logger Rate setting. The data logger is idle in this mode if no channels are configured. When set to `Triggered`, the data logger begins to record any configured channels at the instance of the rising edge of the trigger (FlexLogic operand). The data logger ignores all subsequent triggers and continues to record data until the active record is full. Once the data logger is full, capturing of data stops until it is cleared.

Clear Data Logger

Once the data logger is full, a Clear Data Logger command is required to clear the data logger record, before a new record can be started. Performing the Clear Data Logger command also stops the current record and resets the data logger to be ready for the next trigger. The Clear Data Logger command is located at ***Setpoints*** > ***Records*** > ***Clear Records***. The Data Logger Storage Capacity table below shows an example of the dependency of the data logger storage capacity with respect to the selected number of channels, and the selected rate (time interval) at which the logged values are taken. The Data Logger buffer space can be monitored to produce an alarm when the logged data occupies 80% of the data logger storage space. Target message, and operand Data Logger ALRM is generated at this time.

TRIGGER

Range: Off, Any FlexLogic operand

Default: Off

This setting selects the signal used to trigger the start of a new data logger record. Any FlexLogic operand can be used as a trigger source. The Triggered setting only applies when the Data Logger Function is set to “Triggered”.

TRIGGER POSITION

Range: 0 to 50% steps of 1%

Default: 20%

This setpoint defines the percentage of buffer space that is used for recording pre-trigger samples.

DATA LOG FULL ALARM (4.10 onwards)

Range: Disabled, Enabled

Default: Enabled

This setpoint disables/enables the *Data Logger Full* event and target message.

RATE

Range: 1 cycle, 1 second, 30 seconds, 1 minute, 15 minutes, 30 minutes, 1 hour, 6 hours, 8 hours, 12 hours, 24 hours

Default: 1 minute

This setting selects the time interval at which the actual value is recorded.

CHANNEL 1(16) SOURCE

Range: Off, Any FlexAnalog parameter

Default: Off

This setpoint selects the metering analog value that is to be recorded in Channel 1(16) of the data log. The parameters available in a given relay are dependent on: the type of relay, the type and number of CT/VT hardware installed, and the type and number of Analog Inputs hardware installed. Upon startup, the relay automatically prepares the parameter list.

CHANNEL 1(16) MODE

Default: Sample

Range: Sample, Min, Max, Mean

This setpoint defines the type of sample to be logged in the data logger record with respect to the selected rate, i.e the time interval selected under the setpoint ***Rate***.

While enabled the Data Logger executes every protection pass and each of the four modes —`Sample`, `Max`, `Min` or `Mean`. The FlexAnalog values are updated at protection-pass rate:

In `Sample` mode the data logger records the FlexAnalog value updated in the first protection-pass from the time interval selected under setpoint ***Rate***.

In `Max` mode the data logger records the maximum protection pass value of the selected FlexAnalog parameter from all protection pass values from the time interval selected under setpoint ***Rate***.

In `Min` mode the data logger records the minimum protection pass value of the selected FlexAnalog parameter from all protection pass values from the time interval selected under setpoint ***Rate***.

In `Mean` mode, the data logger records the average value among all the values at protection-pass rate, from the time interval selected under setpoint ***Rate***.

The mean (average) is calculated simply using the well known ratio between the sum of all the values and their number over the time interval.

Sampling Rate [sec]		Number of Channels	Time-Window covered			
			[sec]	[min]	[hour]	[day]
1 cycle	50Hz	1	1310.7	21.8	0.4	0.0
		8	546.1	9.1	0.2	0.0
		16	327.7	5.5	0.1	0.0
	60Hz	1	1092.3	18.2	0.3	0.0
		8	455.1	7.6	0.1	0.0
		16	273.1	4.6	0.1	0.0
1		1	65536.0	1092.3	18.2	0.8
		8	27306.0	455.1	7.6	0.3
		16	16384.0	273.1	4.6	0.2
30		1	1966080.0	32768.0	546.1	22.8
		8	819180.0	13653.0	227.6	9.5
		16	491520.0	8192.0	136.5	5.7
60		1	3932160.0	65536.0	1092.3	45.5
		8	1638360.0	27306.0	455.1	19.0
		16	983040.0	16384.0	273.1	11.4
900		1	58982400.0	983040.0	16384.0	682.7
		8	24575400.0	409590.0	6826.5	284.4
		16	14745600.0	245760.0	4096.0	170.7
1800		1	117964800.0	1966080.0	32768.0	1365.3
		8	49150800.0	819180.0	13653.0	568.9
		16	29491200.0	491520.0	8192.0	341.3
3600		1	235929600.0	3932160.0	65536.0	2730.7
		8	98301600.0	1638360.0	27306.0	1137.8
		16	58982400.0	983040.0	16384.0	682.7

Figure 108: Data Logger Storage Capacity

6.8 FAULT REPORTS

The relay supports up to 15 fault reports and an associated fault locator before overwriting the oldest one. The trigger conditions and the characteristics of the feeder, as well as the analog quantities to be stored, are entered in this menu.

When enabled, this function monitors the pre-fault trigger. The pre-fault data are stored in the memory for prospective creation of the fault report on the rising edge of the pre-fault trigger. The element waits for the fault trigger as long as the pre-fault trigger is asserted, but not shorter than 1 second. When the fault trigger occurs, the fault data is stored and the complete report is created. If the fault trigger does not occur within 1 second after the pre-fault trigger drops out, the element resets and no record is created.

The user-programmable fault report contains a header with the following information:

- Relay model
- Device name
- Firmware revision
- Date and time of trigger
- Name of pre-fault trigger (FlexLogic operand)
- Name of Fault trigger (FlexLogic operand)
- Active setting group at the time of pre-fault trigger
- Active setting group at the time of fault trigger.

The fault report continues with the following information:

- All current and voltage phasors (one cycle after the fault trigger)
- Pre-fault values for all programmed analog channels (one cycle before pre-fault trigger)
- Fault values of all programmed analog channels (one cycle after the fault trigger)

Each Fault Report created can be saved as a text file using the EnerVista D&I Setup software. The file names are numbered sequentially to show which file is older than the other.

The captured data also includes the fault type and the distance to the fault location, as well as the reclose shot number (when applicable).

The relay allows locating faults, including ground faults, from delta-connected VTs. In this case, the missing zero-sequence voltage is substituted either by the externally provided neutral voltage (broken delta VT) connected to the auxiliary voltage channel of a VT bank, or by the zero-sequence voltage approximated as a voltage drop developed by the zero-sequence current, and user-provided zero-sequence equivalent impedance of the system behind the relay.

The trigger can be any FlexLogic operand, but in most applications it is expected to be the same operand, usually a virtual output, that is used to drive an output relay to trip a breaker. A Fault Rpt Trig event is automatically created when the report is triggered.

If a number of protection elements, such as overcurrent elements, are ORed to create a fault report trigger, the first operation of any element causing the OR gate output to become high triggers the fault report. However, If other elements operate during the fault and the first operated element has not been reset (the OR gate output is still high), the fault report is not triggered again. Considering the reset time of protection elements, there is very little chance that fault report can be triggered twice in this manner. As the fault report must capture a usable amount of pre and post-fault data, it cannot be triggered faster than every 20 ms.

The fault report stores data, in non-volatile memory, pertinent to an event when triggered. Each fault report is stored as a file to a maximum capacity of fifteen files. A sixteenth trigger overwrites the oldest file.

The <SoftwareLong is required to view all captured data. The relay faceplate display can be used to view the date and time of trigger, the fault type and the distance location of the fault.

Path: ***Setpoints*** > ***Device*** > ***Fault Report***

FUNCTION

Range: Disabled, Enabled

Default: Disabled

PRE-FAULT TRIGGER

Range: Off, Any FlexLogic operand

Default: Off

This setpoint specifies the FlexLogic operand to capture the pre-fault data. The rising edge of this operand stores one cycle-old data for subsequent reporting. The element waits for the fault trigger to actually create a record as long as the operand selected as Pre-Fault Trigger is On. If the operand remains Off for 1 second, the element resets and no record is created.

FAULT TRIGGER

Range: Off, Any FlexLogic operand

Default: Off

This setpoint specifies the FlexLogic operand to capture the fault data. The rising edge of this operand stores the data as fault data and results in a new report. The trigger (not the pre-fault trigger) controls the date and time of the report. The distance to fault calculations are initiated by this signal.

UNITS OF LENGTH

Range: km, Miles

Default: km

This setting provides the units of measurement, in kilometers or miles.

LENGTH OF FEEDER

Range: 0.1 to 99.9 km/Miles in steps of 0.1 km/Miles

Default: 0.1 km/Miles

This setting provides the total length of the feeder, in kilometers or miles as selected by the ***Units Of Length*** setpoint.

Z_1 (RESISTIVE/INDUCTIVE) OF FEEDER

Range: 0.01 to 250.00 Ω in steps of 0.01 Ω

Default: 0.01 Ω

This setting sets the total real/imaginary component of the feeder positive sequence impedance, in secondary ohms.

Z_0 (RESISTIVE/INDUCTIVE) OF FEEDER

Range: 0.01 to 650.00 Ω in steps of 0.01 Ω

Default: 0.01 Ω

This setting sets the total real/imaginary component of the feeder zero sequence impedance, in secondary ohms.

VT SUBSTITUTION

Range: None, I0, V0

Default: None

This setting is set to *None* if the relay is fed from wye-connected VTs. If delta-connected VTs are used, and the relay is supplied with the neutral (3V0) voltage, this setting should be set to *V0*. The method is still exact, as the fault locator would combine the line-to-line voltage measurements with the neutral voltage measurement to re-create the line-to-ground voltages. It is required to configure the delta and neutral voltages under ***Voltage Sensing***. In addition, the relay will check if the auxiliary signal configured is marked as *Vn* (under VT setup), and inhibit the fault location if the auxiliary signal is labeled differently.

If the broken-delta neutral voltage is not available to the relay, an approximation is possible by assuming the missing zero sequence voltage to be an inverted voltage drop produced by the zero-sequence current and the user-specified equivalent zero-sequence system impedance behind the relay: V0 = –Z0 × I0. In order to enable this mode of operation, this setting should be set to `I0`.

Z_0 (RESISTIVE/INDUCTIVE) OF SYSTEM

Range: 0.01 to 99.99 Ω in steps of 0.01 Ω

Default: 0.01 Ω

This setting sets the total real/imaginary component of the system zero sequence impedance, in secondary ohms.

The settings are used only when the ***VT Substitution*** setting value is `I0`. The magnitude is to be entered in secondary ohms. This impedance is an average system equivalent behind the relay. It can be calculated as zero-sequence Thevenin impedance at the local bus with the protected line/feeder disconnected. The method is accurate only if this setting matches perfectly the actual system impedance during the fault. If the system exhibits too much variability, this approach is questionable and the fault location results for single-line-to-ground faults should be trusted accordingly. It should be kept in mind that grounding points in the vicinity of the installation impact the system zero-sequence impedance (grounded loads, reactors, zig-zag transformers, shunt capacitor banks, etc.).

ANALOG CHANNELS 1 to 32

These settings specify an actual value such as voltage or current magnitude, true RMS, phase angle, frequency, temperature, etc., to be stored should the report be created. Up to 32 analog channels can be configured.

6.9 EVENT DATA

The Event Data feature stores 64 FlexAnalog quantities each time an event occurs. The relay is able to capture a maximum of 1024 records. The Event Data behavior matches that of the Event Recorder. This is a Platform feature and a Basic option so it has no dependencies.

There is no enabling or disabling of the feature. It is always on.

When changes are made to the Event Data settings, the Event data is cleared and the Snapshot.txt file is deleted. The Event Record remains as is and is not cleared.

Path: ***Setpoints*** > ***Device*** > ***Event Data***

PARAMETER 1 to 64

Range: Off, any FlexAnalog Parameter

Default: Off

6.10 FLEX STATES

The Flex State feature provides a mechanism where any of 256 selected FlexLogic operand states or any inputs can be used for efficient monitoring.

The feature allows user-customized access to the FlexLogic operand states in the relay. The state bits are packed so that 16 states may be read out in a single Modbus register. The state bits can be configured so that all of the states which are of interest are available in a minimum number of Modbus registers.

Path: ***Setpoints*** > ***Device*** > ***Flex States***

PARAMETER 1 (to 256)

Range: Off, Any FlexLogic operand

Default: Off

6.11 FRONT PANEL

The relay provides an easy to use faceplate for menu navigation through five navigation pushbuttons and high quality graphical display. Conveniently located on the panel is a group of seven pushbuttons for **Up**/**Down** value selection, **Enter**, **Home**, **Escape**, **Help**, and **Reset** functions. The faceplate includes three programmable function pushbuttons with LEDs.

The ten pushbutton membrane faceplate (available for 850 only for hardware versions A and B, and all models for hardware version C) includes ten programmable function pushbuttons and twelve programmable LEDs.

> *Note:*
> *The USB port on the Front Panel is intended for connection to a portable PC.*

6.11.1 PROGRAMMABLE LEDS

Path: ***Setpoints*** > ***Device > Front panel >Programmable LEDs***

LED “IN SERVICE”

Range: Off, Any FlexLogic operand

Default: In-Service

This setpoint requires assigning of FlexLogic operand to turn on the LED “In Service” This LED indicates that control power is applied, all monitored inputs, outputs, and internal systems are OK, and that the device has been programmed.

LED “TRIP”

Range: Off, Any FlexLogic operand

Default: Any Trip

The setpoint requires a FlexLogic operand to be assigned in order to turn on the **TRIP** LED, when triggered. This indicator always latches, and a reset command must be initiated to allow the latch to be reset.

The LED can be also triggered by the operation of a protection, control, or monitoring element with its function selected as `Trip`.

LED “ALARM”

Range: Off, Any FlexLogic operand

Default: Any Alarm

The setpoint requires a FlexLogic operand to be assigned in order to turn on the **ALARM** LED, when triggered. The indicator is a self-reset indicator, unless it is initiated from a protection, control, or monitoring element whose function is selected as `Latched Alarm`. Resetting the Latched Alarm LED is performed by initiating a Reset command.

LED “PICKUP”

Range: Off, Any FlexLogic operand

Default: Any Pickup

The setpoint requires a FlexLogic operand to be assigned in order to turn on the **PICKUP** LED , when triggered. The indicator is a self-rest indicator and will turn off if the condition evolves into a fault or the measured parameter drops below the pickup level.

LED x NAME

Range: Up to 13 alphanumeric characters

Default: LED 5

The setpoint is used to select the LED name by choosing up to 13 alphanumeric characters.

LED x COLOR

Range: Off, Red, Green, Orange

Default: Orange

The setpoint selects the color of the LED. Three colors are available for selection: `Red`, `Green`, and `Orange`.

> *Note:*
> *This setting is not available for LEDs 18 to 24.*

LED x TRIGGER

Range: Off, Any FlexLogic operands

Default: Testing On

This setpoint requires the assigning of a FlexLogic operand to trigger the selected LED upon operation.

LED x TYPE

Range: Self-reset, Latched

Default: Testing On

The setpoint defines the type of LED indication as either `Self-Reset` (the LED resets after the FlexLogic operand drops out), or `Latched` (the LED stays latched upon dropping out of the FlexLogic operand).

6.11.1.1 LED ALLOCATION TABLES

Default LED setpoints for 3 Pushbutton Front Panels

	Name	Color	Trigger	Type
LED1	In Service	Green	In-Service	Self-Reset
LED2	Trip	Red	Any Trip	Latched
LED3	Alarm	Orange	Any Alarm	Self-Reset
LED4	Pickup	Green	Any Pickup	Self-Reset
LED5	TEST MODE	Orange	Testing ON	Self-Reset
LED6	MESSAGE	Orange	Active Target	Self-Reset
LED7	LOCAL MODE	Orange	Local Mode ON	Self-Reset
LED8	BKR OPEN	Green	BKR Opened	Self-Reset
LED9	BKR CLOSED	Red	BKR Closed	Self-Reset
LED10	LED 10	Green	Off	Self-Reset
LED11	SYNCHECK OK	Green	Sync 1 Check OK	Self-Reset
LED12 850 with AR Function	AR Enabled	Orange	AR1 Enabled	Self-Reset
LED12 850 without AR Function	LED 12	Orange	AR1 Enabled	Self-Reset

	Name	Color	Trigger	Type
LED13 850 with AR Function	AR In Progress	Orange	AR1 In Progress	Self-Reset
LED13 850 without AR Function	LED 13	Orange	AR1 Enabled	Self-Reset
LED14 850 with AR Function	AR Lockout	Orange	AR1 Lockout	Self-Reset
LED14 850 without AR Function	LED 14	Orange	AR1 Enabled	Self-Reset
LED12	AR ENABLED	Orange	AR1 Enabled	Self-Reset
LED13	AR IN PROGRESS	Orange	AR1 In Progress	Self-Reset
LED14	AR LOCKOUT	Orange	AR1 Lockout	Self-Reset
LED15	PB 1	Orange	Pushbutton 1 ON	Self-Reset
LED16	PB 2	Orange	Pushbutton 2 ON	Self-Reset
LED17	PB 3	Orange	Pushbutton 3 ON	Self-Reset

Default LED setpoints for 10 Pushbutton Membrane Front Panel

	Name	Color	Trigger	Type
LED1	In Service	Green	In-Service	Self-Reset
LED2	Trip	Red	Any Trip	Latched
LED3	Alarm	Orange	Any Alarm	Self-Reset
LED4	Pickup	Green	Any Pickup	Self-Reset
LED5	TEST MODE	Orange	Testing ON	Self-Reset
LED6	MESSAGE	Orange	Active Target	Self-Reset
LED7	PHASE A FAULT	Orange	Ph TOC 1 OP A	Self-Reset
LED8	PHASE B FAULT	Green	Ph TOC 1 OP B	Self-Reset
LED9	PHASE C FAULT	Red	Ph TOC 1 OP C	Self-Reset
LED10	GROUND FAULT	Green	GND TOC 1 OP	Self-Reset
LED11	50P INST OC	Green	Ph IOC 1 OP	Self-Reset
LED12 850 with AR Function	AR Lockout	Orange	AR1 LOCKOUT	Self-Reset
LED12 850 without AR Function	27 Phase UV	Orange	AR1 LOCKOUT	Self-Reset
LED 13	Not available	Not available	Not available	Not available
LED 14	Not available	Not available	Not available	Not available
LED15	PB 1	Orange	PB 1 On (Open)	Self-Reset
LED16	PB 2	Orange	PB 2 On (Close)	Self-Reset
LED17	PB 3	Orange	PB 3 On (Reclose Enbld)	Self-Reset
LED18	PB 4	Orange	PB 4 On (GndTrip Enbld)	Self-Reset

	Name	Color	Trigger	Type
LED19	PB 5	Orange	PB 5 On (Remote Enbld)	Self-Reset
LED20	PB 6	Orange	PB 6 On (Hot Line Tag)	Self-Reset
LED21	PB 7	Orange	PB 7 On (Demand Reset)	Self-Reset
LED22	PB 8	Orange	PB 8 On (Alt Settings)	Self-Reset
LED23	PB 9	Orange	PB 9 On (Trig Osc)	Self-Reset
LED24	PB 10	Orange	PB 10 On (PB Block)	Self-Reset

6.11.2 PROGRAMMABLE PUSHBUTTONS

Note:
The 10 pushbutton panel is available only for the 850 for hardware versions A and B, and for all models from hardware version C.

The user-programmable pushbuttons provide an easy and error-free method of entering digital state (on, off) information. Depending on the faceplate three to ten pushbuttons are available for programming.

The digital state of the pushbuttons can be entered only locally (by directly pressing the front panel pushbutton). Typical applications include breaker control, autorecloser blocking and settings groups changes. The user-programmable pushbuttons are under the control level of password protection.

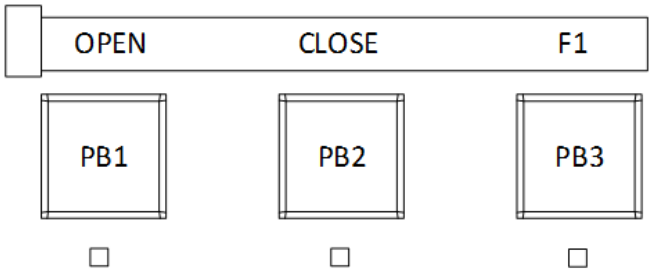

Figure 109: 3 Pushbutton Front Panel

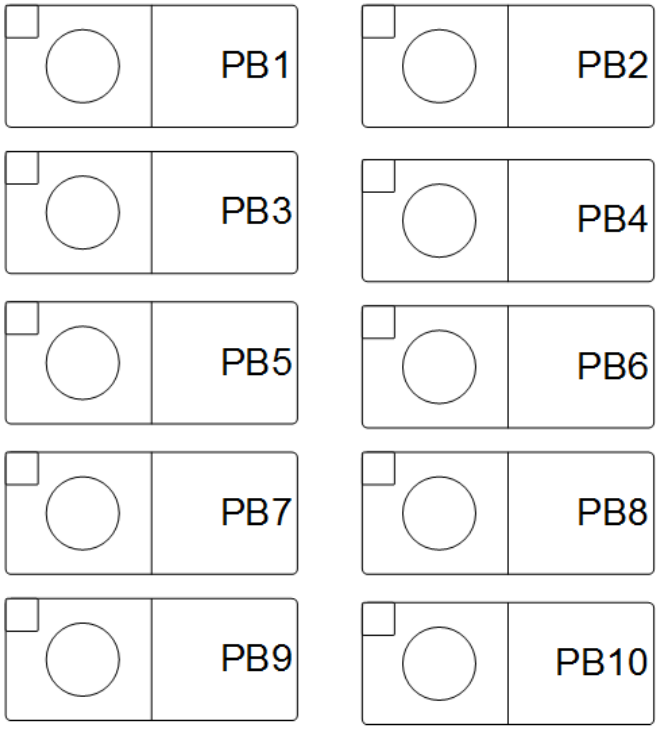

Figure 110: 10 Pushbutton Front Panel

Each pushbutton asserts its own on and off FlexLogic operands (for example, PUSHBUTTON 1 ON and PUSHBUTTON 1 OFF). These operands are available for each pushbutton and are used to program specific actions. Each pushbutton has an associated LED indicator. By default, this indicator displays the present status of the corresponding pushbutton; ON or OFF. This can be changed by programming the ***LED Trigger*** setting in the Programmable LED settings menu.

The activation and deactivation of user-programmable pushbuttons is dependent on whether latched or self-reset mode is programmed.

LATCHED MODE

In Latched Mode, a pushbutton can be set (activated) by directly pressing the associated front panel pushbutton. The pushbutton maintains the set state until deactivated by a ***Reset*** command or after a user-specified time delay. The state of each pushbutton is stored in non-volatile memory and maintained through loss of control power.

The pushbutton is Reset (deactivated) in Latched Mode by directly pressing the associated active front panel pushbutton. It can also be programmed to Reset automatically through the ***PB 1 AUTORESET*** and ***PB 1 AUTORESET DELAY*** settings. These settings enable the auto-reset timer and specify the associated time delay. The auto-reset timer can be used in select-before-operate (SBO) switching device control applications, where the command type (CLOSE/OPEN) must be selected prior to command execution. The selection must Reset automatically if control is not executed within a specified time period.

SELF-RESET MODE

In Self-reset mode, a pushbutton remains active for the time it is pressed (the pulse duration) plus the Dropout time specified in the ***PUSHBTN 1 DROPOUT TIME*** setting. The pushbutton is Reset (deactivated) in Self-reset mode when the dropout delay specified in the ***PUSHBTN 1 DROPOUT TIME*** setting expires.The pulse duration of the pushbutton must be at least 50 ms to operate the pushbutton. This allows the user-programmable pushbuttons to properly operate during power cycling events and various system disturbances that may cause transient assertion of the operating signals.

The operation of each user-programmable pushbutton can be inhibited through the ***PUSHBTN 1 LOCK*** setting. If locking is applied, the pushbutton ignores the commands executed through the front panel pushbuttons. The locking functions are not applied to the auto-reset feature. In this case, the inhibit function can be used in SBO control operations to prevent the pushbutton function from being activated and ensuring “one-at-a-time” select operation.

The locking functions can also be used to prevent accidental pressing of the front panel pushbuttons.

Pushbutton states can be logged by the Event Recorder and displayed as Target Messages. In latched mode, user-defined messages can also be associated with each pushbutton and displayed when the pushbutton is ON or changing to OFF.

Path:***Setpoints*** > ***Device*** > ***Programmable PBs*** > ***Pushbutton 1(X)***

FUNCTION

Range: Self-reset, Latched, Disabled

Default: Self-reset

This setting selects the characteristic of the pushbutton. If set to `Disabled` the pushbutton is not active and the corresponding FlexLogic operands (both ON and OFF) are de-asserted. If set to ***Self-reset*** the control logic is activated by the pulse (longer than 100 ms) issued when the pushbutton is being physically pressed.

When in `Self-reset` mode and activated locally, the pushbutton control logic asserts the ON corresponding FlexLogic operand as long as the pushbutton is being physically pressed, and after being released the deactivation of the operand is delayed by the ***PUSHBTN 1 DROPOUT TIME*** setting. The OFF operand is asserted when the pushbutton element is deactivated.

If set to `Latched`, the control logic alternates the state of the corresponding FlexLogic operand between ON and OFF on each button press or by virtually activating the pushbutton (assigning Set and Reset operands). When in `Latched` mode, the states of the FlexLogic operands are stored in a non-volatile memory. Should the power supply be lost, the correct state of the pushbutton is retained upon subsequent power-up of the relay.

ID TEXT

Range: Up to 13 alphanumeric characters

Default: Open (PB1), Close (PB2), F1 (PB3), Gnd Trip Enabled (PB4), SCADA Enabled (PB5), Hot Line Tag (PB6), Demand Reset (PB7), Alt Settings (PB8), Target Reset (PB9), PB Block (PB10)

Default: Start (PB1), Stop (PB2), F1 (PB3), Gnd Trip Enabled (PB4), SCADA Enabled (PB5), Hot Line Tag (PB6), Demand Reset (PB7), Alt Settings (PB8), Target Reset (PB9), PB Block (PB10)

This setting specifies the 13-character line of the user-programmable message and is intended to provide the ID information of the pushbutton.

ON TEXT

Range: Up to 13 alphanumeric characters

Default: PB1 On (or PB[X] On)

This setting specifies the 13-character line of the user-programmable message and is displayed when the pushbutton is in the ON position.

OFF TEXT

Range: Up to 13 alphanumeric characters

Default: PB1 Off (or PB[X] On)

This setting specifies the 13-character line of the user-programmable message and is displayed when the pushbutton is activated from the ON to the OFF position and the ***PUSHBUTTON 1 FUNCTION*** is `Latched`. This message is not displayed when the ***PUSHBUTTON 1 FUNCTION*** is `Self-reset` as the pushbutton operand

status is implied to be “OFF” upon its release. The length of the “OFF” message is configured with the ***PRODUCT SETUP/DISPLAY PROPERTIES/FLASH MESSAGE TIME*** setting.

The message programmed in the ***PUSHBTN 1 ID*** and ***PUSHBTN 1 ON TEXT*** settings will be displayed as long as Pushbutton 1 On operand is asserted, but not longer than the time period specified by the ***FLASH MESSAGE TIME*** setting. After the flash time has expired, the default message or other active target message is displayed. The instantaneous Reset of the flash message will be executed if any relay front panel button is pressed or if any new target or message becomes active.

The ***PUSHBTN 1 OFF TEXT*** setting is linked to Pushbutton 1 Off operand and will be displayed in conjunction with ***PUSHBTN 1 ID*** only if the pushbutton element is in `Latched` mode.

HOLD PRESSED

Range: 0.0 to 10.0 s in steps of 0.1 s

Default: 0.1 s

This setting specifies the time required for a pushbutton to be pressed before it is deemed active.

The timer is Reset upon release of the pushbutton. Note that any pushbutton operation will require the pushbutton to be pressed a minimum of 60 ms. This minimum time is required prior to activating the pushbutton hold timer.

AUTORESET

Range: Disabled, Enabled

Default: Disabled

This setting enables the user-programmable pushbutton Autoreset feature. The setting is applicable only if the pushbutton is in `Latched` mode.

AUTORESET DELAY

Range: 0.2 to 600.0 s in steps of 0.1 s

Default: 1.0 s

This setting specifies the time delay for automatic Reset of the pushbutton when in the `Latched` mode.

LOCK

Range: Off, Any FlexLogic operand

Default: Off

This setting assigns a FlexLogic operand serving to inhibit pushbutton operation from the front panel pushbuttons. This locking functionality is not applicable to pushbutton autoreset.

DROPOUT TIME

Range: 0.0 to 600.0 s in steps of 0.1 s

Default: 0.0 s

This setting applies only to `Self-reset` mode and specifies the duration of the pushbutton “active” status after the pushbutton has been released. The length of time the operand remains on has no effect on the pulse duration.

The setting is required to set the duration of the pushbutton operating pulse.

EVENTS

Range: Disabled, Enabled

Default: Enabled

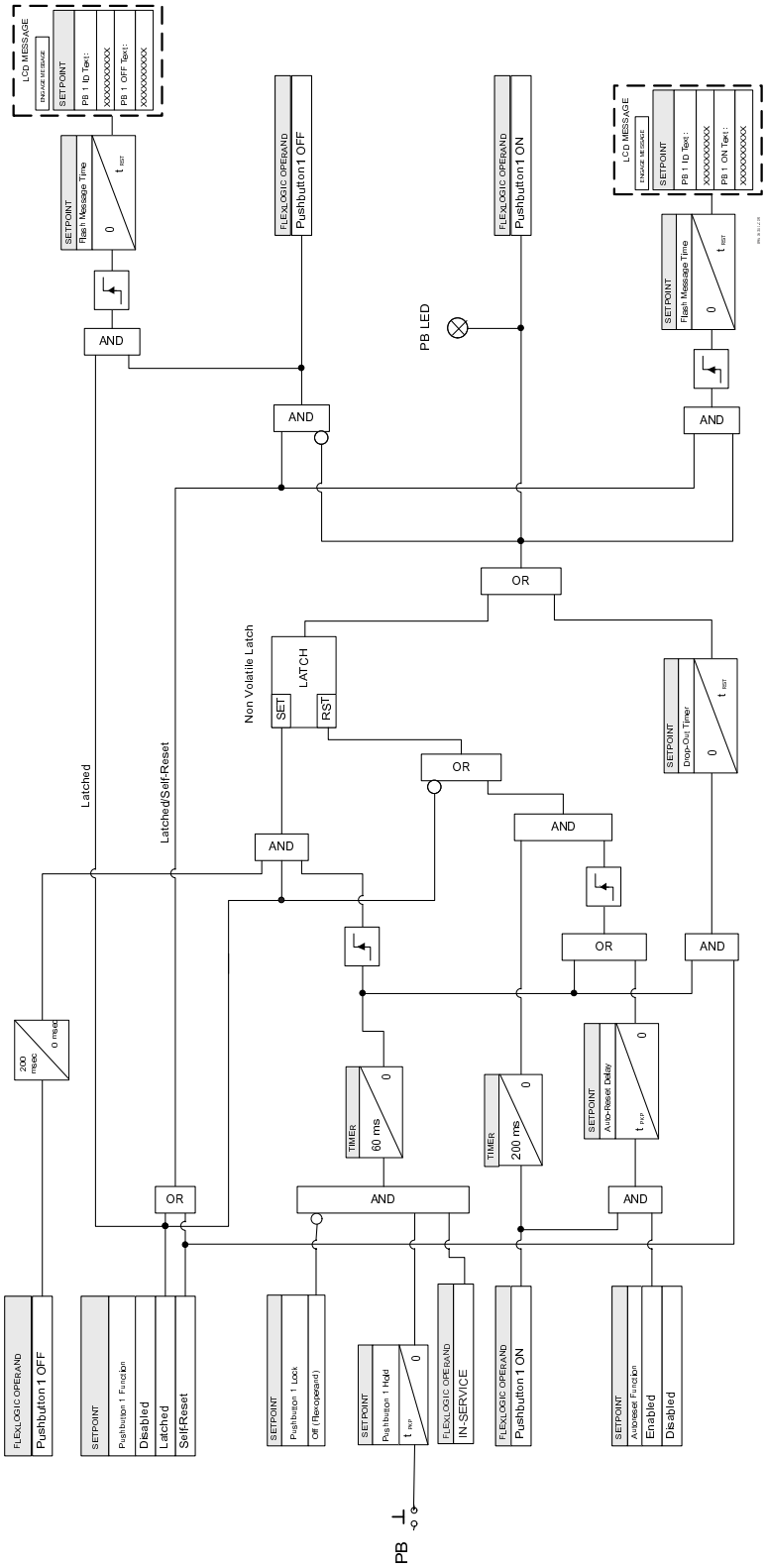

Figure 111: Pushbuttons Logic Diagram

6.11.2.1 TEN PUSHBUTTON ALLOCATION TABLES

PB1 to PB3 Default Values (3 pushbutton Front Panels)

	PB1	PB2	PB3
Function	Self-Reset	Self-Reset	Self-Reset
ID Text	Open	Close	F1
ON Text	PB1 ON	PB2 ON	PB3 ON
OFF Text	PB1 OFF	PB2 OFF	PB3 OFF
LED Trigger	PB1 ON	PB2 ON	PB3 ON
Hold Pressed	0.1s	0.1s	0.1s
Autoreset	Disabled	Disabled	Disabled
Autoreset Delay	1.0s	1.0s	1.0s
Lock	Off	Off	Off
Dropout Time	0.0s	0.0s	0.0s
Events	Enabled	Enabled	Enabled

PB1 to PB10 Default Values (10 Pushbutton Membrane Front Panel)

	PB1	PB2	PB3	PB4	PB5	PB6	PB7	PB8	PB9	PB10
Function	Self-Reset	Self-Reset	Latched	Latched	Latched	Latched	Self-Reset	Latched	Self-Reset	Latched
ID Text	Open	Close	Reclose Enabled	Ground Trip Enabled	Remote Enabled	Hot Line Tag	Demand Reset	Alternate Settings	Trigger Transient Recorder	PB Lock
ON Text	PB1 ON	PB2 ON	PB3 ON	PB4 ON	PB5 ON	PB6 ON	PB7 ON	PB8 ON	PB9 ON	PB10 ON
OFF Text	PB1 OFF	PB2 OFF	PB3 OFF	PB4 OFF	PB5 OFF	PB6 OFF	PB7 OFF	PB8 OFF	PB9 OFF	PB10 OFF
LED Trigger	PB1 ON	PB2 ON	PB3 ON	PB4 ON	Local Mode OFF	PB6 ON	PB7 ON	PB8 ON	PB9 ON	PB10 ON
Hold Pressed	0.1s	0.1s	0.1s	0.1s	0.1s	0.1s	0.1s	0.1s	0.1s	3.0s
Autoreset	Disabled	Disabled	Disabled	Disabled	Disabled	Disabled	Disabled	Disabled	Disabled	Disabled
Autoreset Delay	1.0s	1.0s	1.0s	1.0s	1.0s	1.0s	1.0s	1.0s	1.0s	1.0s
Lock	PB10 ON	PB10 ON	PB10 ON	PB10 ON	PB10 ON	PB10 ON	PB10 ON	PB10 ON	PB10 ON	Off
Dropout Time	0.0s	0.0s	0.0s	0.0s	0.0s	0.0s	0.0s	0.0s	0.0s	0.0s
Events	Enabled	Enabled	Enabled	Enabled	Enabled	Enabled	Enabled	Enabled	Enabled	Enabled

6.11.3 TAB PUSHBUTTONS

The Tab Pushbuttons provide an easy and error-free method of entering digital state (on, off) information. Twenty (20) Tab Pushbuttons are available for programming.

The digital state of the Tab Pushbuttons can be entered locally (by directly pressing the front panel pushbutton) or through Modbus by specifying the correct COMMAND sequence. Typical applications include breaker control, autorecloser blocking, and settings groups changes. The Tab Pushbuttons are under the control level of password protection. Only one pushbutton can be pressed at a time. If multiple pushbuttons are pressed simultaneously, the button pressed first takes the priority.

The Tab Pushbutton settings can be accessed from ***Setpoints*** > ***Device*** > ***Front Panel*** > ***Tab Pushbuttons*** > ***Tab PB1***. The Tab Pushbutton control can be executed by navigating to ***Status*** > ***Summary*** > ***Tab Pushbuttons***. By default, the summary page is shown to quickly glance at the active tab pushbuttons. The individual pages can then be accessed from the summary page. Each Tab Pushbutton asserts its own OFF and ON FlexLogic operands (for example, TAB PB 1 ON and TAB PB 1 OFF). These operands are available for each pushbutton and can be used to program specific actions. Each pushbutton has an associated “LED” indicator. By default, this indicator displays the present status of the corresponding pushbutton ON state.

The activation and deactivation of Tab Pushbuttons is dependent on whether latched or self-reset mode is programmed.

SELF-RESET MODE: In Self-reset mode, a Tab Pushbutton remains active for the time it is pressed (the pulse duration) plus the Dropout time specified in the settings. The pushbutton is deactivated in Self-reset mode when the dropout delay specified in the Dropout Time setting expires. The pulse duration of the pushbutton must be at least 100ms to operate the pushbutton.

LATCHED MODE: In Latched Mode, a pushbutton can be set (activated) by directly pressing the associated tab pushbutton. The pushbutton maintains the set state until deactivated by another press of the same button. The state of each pushbutton is stored in non-volatile memory and maintained through the loss of control power.

Path: ***Setpoints*** > ***Device*** > ***Front Panel*** > ***Tab PBs*** > ***Tab PB1(X)***

FUNCTION

Range: Self-reset, Latched, Disabled

Default: Self-reset (up to 3.xx)

Default: Disabled (from 4.10)

This setting selects the characteristic of the pushbutton. If disabled, the pushbutton is not active and the corresponding FlexLogic operands (both ON and OFF) are de-asserted. If set to Self-reset the control logic is activated by the pulse issued when the pushbutton is being physically pressed.

When in Self-Reset mode and activated locally, the pushbutton control logic asserts the Tab PB [X] ON FlexLogic operand as long as the pushbutton is being physically pressed, and after being released the deactivation of the operand is delayed by the Dropout Time setting. The OFF operand is asserted when the pushbutton element is deactivated.

If set to Latched, the control logic alternates the state of the corresponding FlexLogic operand between ON and OFF on each button press. When in Latched mode, the states of the FlexLogic operands are stored in a non-volatile memory. Should the power supply be lost, the correct state of the pushbutton is retained upon subsequent power-up of the relay. When the pushbutton operand is in the ON state, the operand appears on the target message until the pushbutton is pressed again to change it to the OFF state.

ID TEXT

Range: Up to 13 alphanumeric characters

Default: Tab PB 1 (or Tab PB[X])

This setting specifies the 13-character line of the user-programmable message and is intended to provide the ID information of the pushbutton. This text is used to describe the pushbutton in the FlexLogic operands.

LINE 1 TEXT

Range: 2 lines of alphanumeric characters

Default: [blank]

This setting specifies the text that is displayed on Line 1 of the button when in the normal view.

LINE 2 TEXT

Range: 2 lines of alphanumeric characters

Default: [blank]

This setting specifies the text that is displayed on Line 2 of the button when in the normal view.

LINE 1 SHORT TEXT

Range: 2 lines of alphanumeric characters

Default: [blank]

This setting specifies the text that is displayed on Line 1 of the button when in the summary view. This is also the text that appears on the tabs when operating the pushbuttons from the Single Line Diagram view.

LINE 2 SHORT TEXT

Range: 2 lines of alphanumeric characters

Default: [blank]

This setting specifies the text that is displayed on Line 2 of the button when in the summary view.

BUTTON COLOR

Range: Black, Red, Yellow, Blue, Green, Teal, Purple, White

Default: Black

This setting specifies the background color of the Tab Pushbutton. If the button is disabled, the button color by default is shown as gray.

TEXT COLOR

Range: Black, Red, Yellow, Blue, Green, Teal, Purple, White

Default: White

This setting specifies the text color of the Tab Pushbutton.

INDICATOR COLOR

Range: Black, Red, Yellow, Blue, Green, Teal, Purple, White

Default: Yellow

This setting specifies the color of the “LED” indicator for the Tab Pushbutton.

INDICATOR TRIGGER

Range: TAB PB 1 ON, Any FlexLogic operand

Default: TAB PB 1 ON

This setting assigns a FlexLogic operand to trigger the Indicator to change color from the default color (white) to the selected color.

HOLD PRESSED

Range: 0.1 to 10.0 s in steps of 0.1 s

Default: 0.1 s

This setting specifies the time required for a pushbutton to be pressed before it is deemed active.

The timer is Reset upon release of the pushbutton. Note that any pushbutton operation will require the pushbutton to be pressed a minimum of 100ms.

AUTORESET

Range: Disabled, Enabled

Default: Disabled

This setting enables the Tab Pushbutton Autoreset feature. The setting is applicable only if the pushbutton is in “Latched” mode.

AUTORESET DELAY

Range: 0.2 to 600.0 s in steps of 0.1 s

Default: 1.0 s

This setting specifies the time delay for automatic Reset of the pushbutton when in the “Latched” mode.

LOCK

Range: Any FlexLogic operand

Default: Off

This setting assigns a FlexLogic operand to inhibit pushbutton operation from the front panel pushbuttons. This locking functionality is not applicable to pushbutton autoreset.

DROPOUT TIME

Range: 0.0 s to 600.0 s in steps of 0.1 s

Default: 0.0 s

This setting applies only to “Self-reset” mode and specifies the duration of the pushbutton “active” status after the pushbutton has been released. The length of time the operand remains on has no effect on the pulse duration.

The setting is required to set the duration of the pushbutton operating pulse.

EVENTS

Range: Disabled, Enabled

Default: Enabled

6.11.4 ANNUNCIATOR

The graphical annunciator panel provides an emulation of a conventional physical annunciator panel with backlit indicators each inscribed with a description of the alarm condition that lights the indicator. The annunciator has 36 user-configurable (programmable) indicators. The indicators can be arranged in pages of 3x3 or 2x2 grids. Each indicator can have up to 3 lines of configurable text. When the indicators are not active (i.e. a configured FlexOperand for the annunciator is not triggered), the background is black and the foreground text color is gray. When the associated FlexOperand becomes active, the background and the foreground turns brighter in color per the color configuration. When disabled, the indicators are grayed out with no text.

Layout

If the grid layout is selected to be 3x3, the annunciator has 4 pages. If the grid layout is 2x2, the annunciator has 9 pages. The numbering of the indicators is shown as follows.

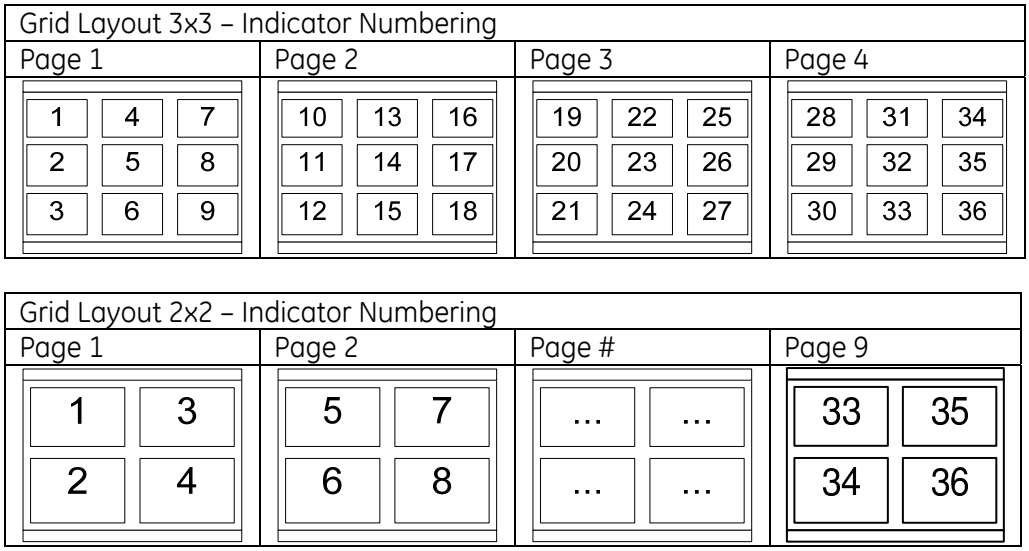

Figure 112: Annunciator grid layout

Navigation

The annunciator panel can be displayed in two ways. By default, the annunciator panel is programmed as one of the homescreens. This means that when on the home page, pressing the home button multiple times rotates through all the homescreens. Alternatively, the annunciator can be accessed by navigating to **Status\Summary \Annunciator\Page1**. Individual annunciator pages can also be assigned as a homepage. If the auto navigation setting is enabled in the setup, the screen automatically jumps from home to the annunciator page with the first active alarm. Pages with active alarms will have a maroon flashing tab pushbutton label. If other pages have active alarms, the **>>** button will show a flashing label.

Path:***Setpoints*** > ***Device*** > ***Front Panel*** > ***Annunciator*** > ***Annunciator Setup***

RESET ANNUNCIATOR

Range: Off, any FlexLogic operand

Default: Off

This setting designates a FlexLogic operand that, when activated, acknowledges/resets all annunciator windows in the graphical front panel. This setting is the same as that defined under **Setpoints > Device > Resetting > Reset Annunciator**.

The Reset Annunctr OP (OPRD) FlexLogic operand is activated by the two sources of ***RESET*** command, operand source and manual source. Each individual source of a ***RESET ANNUNCIATOR*** command also activates its individual operand Reset Annunctr OP (OPRD) or Reset Annunctr OP (MNUL) to identify the source of the command. Both of these operands generate an event in the event record when activated. The Reset Annunciator setting selects the operand that activates the Reset Annunctr OP (OPRD) operand. The ***RESET*** pushbutton in the front panel or the reset command from the EnerVista D&I Setup software 8 Series Setup software activates the Reset Annunctr OP (MNUL) operand.

PAGE LAYOUT

Range: 3x3, 2x2

Default: 3x3

This setting selects the grid layout of the annunciator pages. The default 3x3 grid layout provides 4 annunciator pages and 2x2 provides 9 pages.

AUTO NAVIGATION

Range: Disabled, Enabled

Default: Enabled

This setting when enabled, automatically navigates to the annunciator panel page from where the indication was triggered. While in the annunciator panel, if no action is taken, the screen returns back to the home page after the timeout setting.

FOCUSED NAVIGATION

Range: Disabled, Enabled

Default: Disabled

When this setting is enabled at the same time as the ***AUTO NAVIGATION*** setting, the page that has the active indicator will come into focus. The focus will change to the newest indicator as soon as that becomes active. Target Messages and Default Screens both have a lower priority than the ***FOCUSED NAVIGATION*** setting of the Annunciator Panel.

Path:***Setpoints*** > ***Device*** > ***Front Panel*** > ***Annunciator*** > ***Indicator 1(36)***

ALARM INPUT

Range: Off, any FlexLogic Operand

Default: Off

This setting specifies the input operand used to activate the corresponding indicator.

ALARM TYPE

Range: Off, Self-Reset, Latched

Default: Off

This setting specifies the alarm type. Self-Reset alarms track the state of the corresponding input operand. Latched alarms can be reset using Reset pushbutton or through Acknowledgment via graphical front panel.

The alarm type of each annunciator indicator may be configured as `Off`, `Self-Reset`, or `Latched`. The default mode is Off. In this mode, the indicator is grayed out without any text. In self-reset mode, the indicator's inactive state is by default in black background with dark gray color text. When the associated operand becomes active (i.e. the assigned FlexOperand is triggered), the configured background color and foreground text color appears. In latched mode, the configured operand causes the background to flash when it becomes active. If the alarm is then acknowledged or reset, the background stops flashing. If the operand becomes inactive, the indicator returns to its default colors. The behavior of these modes conforms to ISA-18.1-1979 (R2004) standard - A-4-5-6 (self-reset), and M-6 (latched).

Note:
If the Annunciator Alarm was initiated by another element that is of a Latched type (e.g. Trip Bus), you must navigate out of the Annunciator and then reset the latched element. This action will reset the latched element, the Annunciator Alarm and also the Trip LED if applicable.

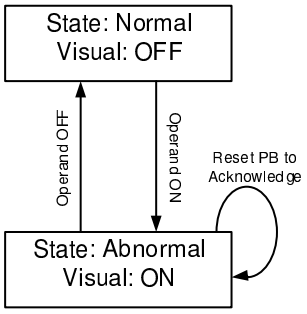

Figure 113: Self-Reset Mode

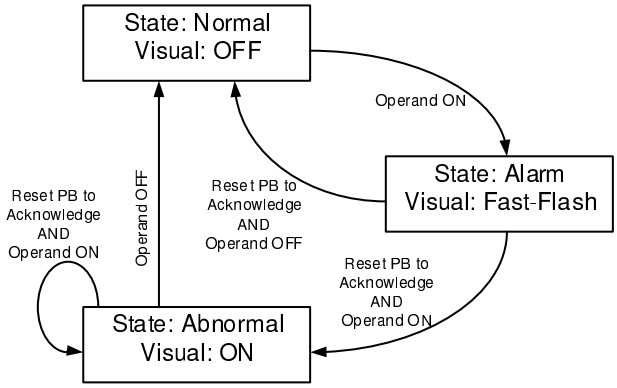

Figure 114: Latched Mode

When any annunciator page is displayed with an alarm condition, the navigation keys can be used to select an indicator. Once selected, the alarm condition can be acknowledged by pressing the reset pushbutton or by pressing the enter key. A confirmation message is displayed for acknowledging the alarm. Pressing the **Reset** or **Enter** key again acknowledges the alarm and pressing the Escape button discards the message. When the alarms are active under latched mode, a power loss retains the previous state of the alarm as the alarm states are stored in non-volatile memory.

TEXT LINE 1 (2,3)

Range: 15 Alphanumeric Characters

Default: [blank]

These settings specify the displayed text on the corresponding line in the alarm indicator. Three lines can be displayed with each line allowing up to 15 alphanumeric characters.

TEXT COLOR

Range: Black, Red, Yellow, Blue, Green, Teal, Purple, White

Default: White

This setting specifies the color of the alarm indicator text.

BACK COLOR

Range: Black, Red, Yellow, Blue, Green, Teal, Purple, White

Default: Red

This setting specifies the color of the alarm indicator background. When the indicator becomes active, the background changes color from the default Black to the programmed alarm back color.

6.11.5 DISPLAY PROPERTIES

Some relay messaging characteristics can be modified to suit different situations using the Front Panel Display Properties setting.

Path: ***Setpoints*** > ***Device*** > ***Front Panel*** > ***Display Properties***

COLOR SCHEME

Range: Green (open), Red (open)

Default: Green (open)

This setting defines the color scheme for the breaker status. If it is programmed Green (open), the breaker open status is shown in the color green on the single line diagram and on the device status.

FLASH MESSAGE TIME

Range: 1 to 10 s in steps of 1 s

Default: 5 s

Flash messages are status, warning, error, or information messages displayed for several seconds in response to certain key presses during programming. These messages override any normal messages. The duration of a flash message on the display can be changed to accommodate different reading rates.

SCREEN TIMEOUT

Range: 10 to 900 s in steps of 1 s

Default: 120 s

If no pushbutton has been pressed for certain period of time, the relay automatically reverts to its default screen.

If the Default Screens are Enabled, Default Screens will become active after the Screen Timeout expires. If the Default Screens are Disabled, The Actuals\Summary page is displayed after the Screen Timeout expires.

DISPLAY INTENSITY

Range: 10%-100%

Default: 100%

The backlight can be reduced be make the screen easier to view under higher atmosphere lighting.

> *Note:*
> *Only available on Membrane and 10 Pushbutton front panel*

INACTIVITY TIMEOUT

Range: 10 to 900 s in steps of 1 s

Default: 300 s

When the Inactivity Timeout expires, the screen will dim to Inactivity Intensity.

If the Default Screens are Disabled, the Screen Saver images will become active when the Inactivity Timeout expires. If the Defaults Screens are Enabled, the Default Screens will be displayed at the Inactivity Intensity when the Inactivity Timeout expires.

If a new Target occurs and the Target Auto Navigation is enabled, the Target Screen will become active. If the system is in an inactive state, the system will switch to an active state. The intensity will return to Display Intensity. If targets are present, the Default Screens will still become operational after the Inactivity Timeout.

INACTIVITY INTENSITY

Range: 10% - 100%

Default: 50%

The inactivity intensity can be varied so that backlight is on at a low intensity instead of being fully shut off.

TARGET AUTO NAVIGATION

Range: Disabled, Enabled

Default: Disabled

When the target auto navigation is set to Enabled, it will override the current menu page and go to the target message page when a target is active.

The Active target Icon shown above, will be the only indication of active target messages.

LANGUAGE

Range: English, French, German, Polish, Russian, Ukrainian,

Default: English

This setting selects the language used to display the settings, metering, status, and targets. The range is dependent on the order code of the relay.

6.11.5.1 SUPPORT FOR CYRILLIC LANGUAGES

The 8 Series of relays support the Russian and Ukrainian languages, but for this to work you also need to configure your Windows system accordingly. You can do this by selecting the required language. Modify the settings in the following locations:

- **Control panel > Region > Adminstrative tab > Change System Locale > Language for non-Unicode programs**
- **Control panel > Region > Language Preferences**

For more information, refer to your Microsoft documentation.

6.11.6 DEFAULT SCREENS

The relay provides the convenience of configuring and displaying up to three default screens from a predefined list. Each type of screen to display can be selected, and the display time programmed. The sequence of displaying the screens starts after the time of inactivity programmed in the ***MESSAGE TIMEOUT*** setpoint, when no PB has been pressed, and no target message is present. Pressing a pushbutton, or the presence of a target message inhibits the sequential display of default screens. The screen displays resume only after the target messages are cleared, and no PB pressing is recorded for 30 seconds. When configured the home screen is changed to the first screen defined by this feature. Display timeouts also return to this first screen (i.e. default screen 1).

If the default screens feature is disabled and there are no home screens programmed, the home page will show the **Metering > Summary > Values** screen after the message timeout inactivity period.

Path: ***Setpoints*** > ***Device*** > ***Front Panel*** > ***Default Screen***

FUNCTION

Range: Disabled, Enabled

Default: Enabled

This setpoint enables the feature. Displaying of the screen starts 30 s after setting the feature to “Enabled”, providing no targets have been issued, nor a PB has been pressed.

DISPLAY TIME

Range: 5 to 900 s in steps of 1 s

Default: 10 s

The display time is the amount of time that each of the three screens are displayed within the display sequence.

DEFAULT SCREEN X

Range: varieties of screens for selection

Default: SLD (for Default Screen 1 only), Off (for others)

This setpoint enables the user to input the default screens.

DEFAULT SCREEN INTENSITY (not available for all FW versions)

Range: 0 to 100% in steps of 10%

Default: 100%

The default screen intensity can be varied so that the backlight is at a low intensity instead of being fully shut off.

6.11.7 HOME SCREENS

The home screens allow the selection of a set of pages as home pages (max. 10). Multiple home pages are configured and navigated to by pressing the home button repeatedly. Navigate through all available home screens by repeatedly pressing the home button.

When returning to the home screen (either by pressing escape or directly pressing the Home button) through the different menus, the last accessed home screen is shown. Subsequent presses of the Home button navigates to the next programmed home screen on the list.

While accessing the home screens, the tab pushbutton navigation labels show the root menu – i.e. Targets, Status, Metering, Setpoints, and Records. The exceptions are the Tab Pushbuttons screens which instead show pushbuttons in the navigation labels.

If the default screens are enabled, the first default screen is shown after 30 seconds plus the inactivity period defined in **Setpoints > Device > Front Panel > Display Properties > Message Timeout**. If the default screens feature and screen saver are disabled, the screen defaults to the Values screen after the inactivity period.

When the home screens are programmed and the default screens feature is enabled but the screens are set to Off, the last accessed home screen is shown as the home page.

By Default, the first home screen is configured to show the first single line diagram.

> *Note:*
> *When on any single line diagram page, if an object is selected, the home button will not function. The selected object must first be de-selected by pressing the escape button to be able to use the home button functionality again.*

Path: ***Setpoints*** > ***Device*** > ***Front Panel*** > ***Home Screens***

HOME SCREEN 1

Range: All available pages

Default: SLD1

HOME SCREEN 2

Range: All available pages

Default: Tab PB Summary

HOME SCREEN 3

Range: All available pages

Default: Annunciator Pg 1

HOME SCREEN 4

Range: All available pages

Default: Values

HOME SCREEN 5 to 10

Range: All available pages

Default: Off

6.11.8 FLEXSCREENS

The FlexScreens allow you to select a page to appear on the display based on the results of an ***OPERATE*** setting. Up to five FlexScreens can be configured. When the ***OPERATE*** setting evaluates to a `TRUE`, the FlexScreen configured will be displayed.

> *Note:*
> *A pulse of 500 ms (or greater) is required to activate a FlexScreen condition.*

Path: Setpoints > Device > Front Panel > FlexScreens

FLEXSCREEN 1

Range: All available pages

Default: Off

FLEXSCREEN 1 OPERATE

Range: Off, Any FlexLogic operand

Default: Off

This setpoint requires the assignment of a FlexLogic operand to turn on FlexScreen 1.

FLEXSCREEN 2

Range: All available pages

Default: Off

FLEXSCREEN 2 OPERATE

Range: Off, Any FlexLogic operand

Default: Off

This setpoint requires the assignment of a FlexLogic operand to turn on FlexScreen 2.

FLEXSCREEN 3

Range: All available pages

Default: Off

FLEXSCREEN 3 OPERATE

Range: Off, Any FlexLogic operand

Default: Off

This setpoint requires the assignment of a FlexLogic operand to turn on FlexScreen 3.

FLEXSCREEN 4

Range: All available pages

Default: Off

FLEXSCREEN 4 OPERATE

Range: Off, Any FlexLogic operand

Default: Off

This setpoint requires the assignment of a FlexLogic operand to turn on FlexScreen 4.

FLEXSCREEN 5

Range: All available pages

Default: Off

FLEXSCREEN 5 OPERATE

Range: Off, Any FlexLogic operand

Default: Off

This setpoint requires the assignment of a FlexLogic operand to turn on FlexScreen 5.

6.12 RESETTING

Some events can be programmed to latch the faceplate LED event indicators and target message on the display. Depending on the application some auxiliary output relays can be programmed to latch after the triggering event is cleared. Once set, the latching mechanism holds all the latched indicators, messages, and auxiliary output relays in the set state, after the initiating condition has cleared, until a ***RESET*** command is received to return these latches (except the FlexLogic latches) to the reset state.

The ***RESET*** command can be sent from the faceplate **Reset** pushbutton, a remote device via a communication channel, or any programmed FlexLogic operand. Executing the ***RESET*** command from either source creates a general FlexLogic operand RESET OP. Each individual source of a ***RESET*** command also creates its individual operand RESET OP (PB), RESET (COMMS), and RESET OP (OPERAND) to identify the source of the command.

RESET INPUT 1(2,3):

Range: Off, Any FlexLogic operand

Default: Off

The setpoint selects an operand from the list of FlexLogic operands. The targets, LEDs, and latched output relays reset upon assertion from any of the operands selected as Reset Inputs.

RESET ANNUNCIATOR

Range: Off, Any FlexLogic operand

Default: Off

The setpoint selects an operand from the list of FlexLogic operands. When activated it resets all annunciator windows on the graphical front panel.

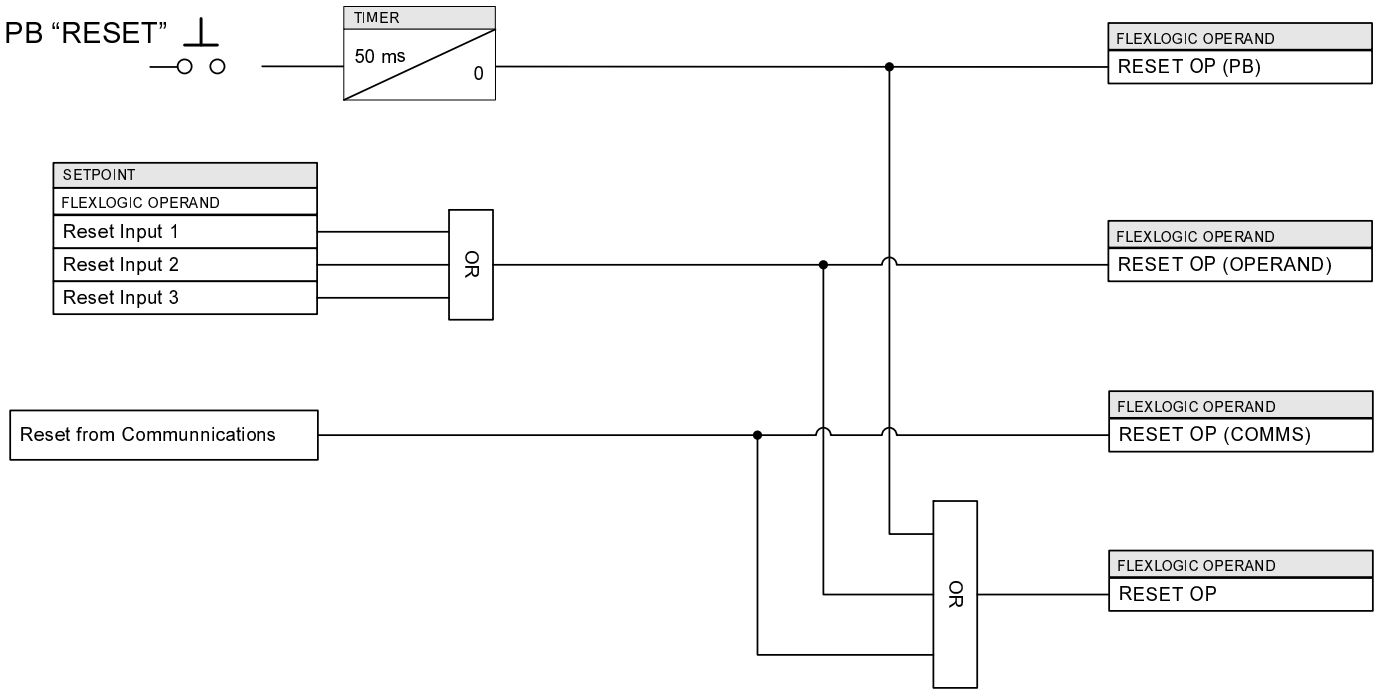

Figure 115: Reset logic

6.13 INSTALLATION

Path: ***Setpoints*** > ***Device*** > ***Installation***

DEVICE NAME

Range: Up to 13 alphanumeric characters

An alphanumeric name may be assigned to the device.

DEVICE IN SERVICE

Default: Not Ready

Range: Not Ready, Ready

The relay is defaulted to the “Not Ready” state when it leaves the factory. This safeguards against the installation of a relay whose settings have not been entered. When powered up successfully, the “IN SERVICE” LED becomes red. The relay in the “Not Ready” state blocks signaling of any output relay. These conditions remain until the relay is explicitly put in the “Ready” state.

SERVICE COMMAND

Range: 0 to 65535

Default: 0

TEMPERATURE DISPLAY

Range: Celsius, Fahrenheit

Default: Celsius

Selects engineering unit of temperature display.

LATCHED ALARM OPERATION

Range: Self-Reset, Latched

Default: Latched

This setting applies to all the elements programmed to `Latched Alarm` function. It does not apply to the elements that are programmed to Alarm function.

When this setting is programmed to `Latched`, all the elements programmed to `Latched Alarm` will keep the Alarm LED and outputs (OP signal and assigned Output Relay) latched until the operating condition clears and a Reset command is issued.

When this setting is programmed to `Self-Reset`, all the elements programmed to `Latched Alarm` will keep the Alarm LED latched but resets outputs (OP signal and assigned Output Relay) automatically once the operating condition clears.

REMOTE IO DETECT VALUE

Range: Up to 6 alphanumeric characters

Shows the letter type of the Remote RTD card Board ID installed (e.g. GGGG).

CURRENT CUTOFF

Range: 0.000 to 1.000 p.u. in steps of 0.001 p.u.

Default: 0.020 p.u.

VOLTAGE CUTOFF

Range: 0.0 to 300.0 in steps of 0.1 V

Default: 1.0 V

> *Note:*
> *Lower the Voltage Cutoff and Current Cutoff levels with care as the relay accepts lower signals as valid measurements. Unless dictated otherwise by a specific application, the default settings of "0.020 pu" for current and "1.0 V" for voltage are recommended.*

OV/UV DPO RANGE

Range: 2% , 4%

Default: 2%

This setpoint determines the threshold of the drop-out level. There are two possible ranges, 2% or 4%. This setting affects to all voltage protection functions located under the menu Protection\Voltage Prot.

For overvoltage elements:

The enumerate value of 2% specifies that the dropout voltage level is achieved when the voltage level drops below 2% of the pickup value.

For 4%, the drop-out voltage level is specified when the voltage level drops below 4% of the pickup voltage level.

For Undervoltage elements:

The 2% value determines than the drop-out condition of the pickup flag is given when the voltage level is higher than 2% of the pickup voltage level.

On the other hand, the 4% value establishes that the drop-out level of the pickup flag is given when the voltage is higher than the 4% of the pickup voltage level.

The next table summarizes both conditions:

OV/UV DPO Range	OV Functions (Dpo Level)	UV Functions (Dpo Level)
2%	98%	102%
4%	96%	104%

BKR 1 STATUS

Range: Enabled, Disabled

Default: Enabled

Target Message for the breaker status is shown when the set to 'Enabled'. When 'Disabled', all target messages related to breaker status will be blocked.

BKR 2 STATUS

Range: Enabled, Disabled

Default: Enabled

BKR 3 STATUS

Range: Enabled, Disabled

Default: Enabled

6.14 SELF-TEST MONITOR

6.15 CLEAR RECORDS

The Clear Records command is accessible from the front panel and from the EnerVista D&I Setup software.

Path: ***Device > Clear Records***

Records can be cleared by assigning `On` to the appropriate setting.

> *Note:*
> *The Clear Records command is also available from **Records> Clear Records**, where the allowable settings also include FlexLogic operands.*

CHAPTER 7

SYSTEM SETPOINTS

7.1 CHAPTER OVERVIEW

This chapter describes the Device setpoint menu settings in detail.

This chapter contains the following sections:

Chapter Overview 244
System menu hierarchy 245
Current Sensing 246
Voltage sensing 248
Power Sensing 250
Power System 251
Breakers 252
Switches 255
FlexCurves 259

7.2 SYSTEM MENU HIERARCHY

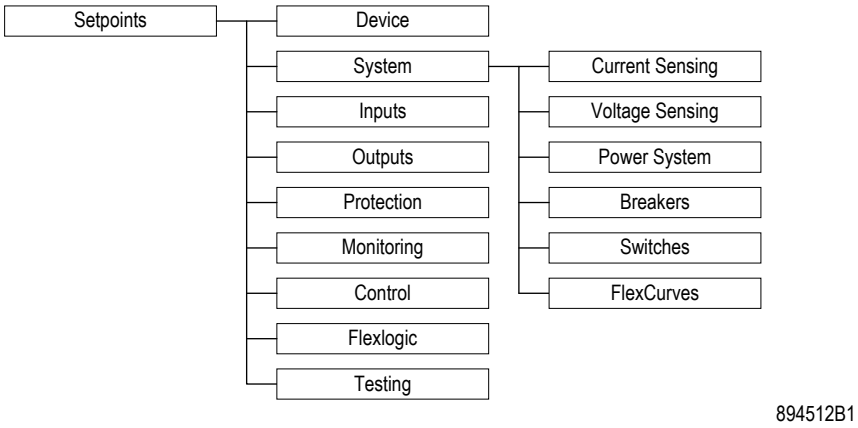

Figure 116: Device Display Hierarchy

7.3 CURRENT SENSING

The Current Sensing menu provides the setup menu for the Current Transformers (CTs) connected to the 850 terminals. The setup of the three-phase CTs, the Ground CT, and the Sensitive Ground CT requires a selection of primary CT ratings. The secondary CT ratings are selected in the relevant order code. The basic AC card has two AC banks, definable at the time of ordering the relay with one bank currents and one bank voltages.

The 850-E Feeder Protection System has three inputs for phase currents A, B, and C, and one input for ground/residual current, all in slot J.

The 850-D Dual Feeder Protection System has two three-phase currents, and one input for ground/residual current in slots J and K respectively.

The single AC input from the card inserted in slot K for 850-D and 850-E is used to connect to the sensitive ground CT for measuring small currents which cannot be correctly measured by a standard type of current input.

The Current sensing selection is organized in a menu as shown:

Path:*Setpoints* > *System* > *Current Sensing* > *CT Bank 1-J1*

CT BANK NAME

Range: up to 13 alphanumeric characters

Default: CT Bank 1-J1

The name entered here is displayed in the Signal Input setpoint for applicable functions, and in the Metering menu.

PHASE CT PRIMARY

Range: 1 A to 50000 A in steps of 1A

Default: 500 A

Enter the primary rating of the three-phase feeder CTs wired to the relay phase CT terminals. With the phase CTs connected in wye (star), the calculated phasor sum of the three phase currents (Ia + Ib + Ic = Neutral Current = 3I0) is used as the input for the neutral.

GROUND CT PRIMARY

Range: 1 A to 50000 A in steps of 1A

Default: 500 A

Enter the primary rating of the ground CT wired to the relay ground CT terminals. When the ground input is used for measuring the residual 3I0 current, the primary current must be the same as the one selected for the phase CTs.

SENSITIVE GROUND CT PRIMARY (displayed only if the Sensitive ground input is installed)

Range: 1 A to 50000 A in steps of 1A (from FW 4.10)

Default: 500 A

Enter the primary rating of the sensitive ground CT wired to the relay sensitive ground CT terminals.

Note:
*The **Setpoints** > **System** > **Current Sensing** > **CT Bank 3-K2** option is available with order code option R1/R5 for Phase Current Slot K.*

Note:
*The **Setpoints** > **System** > **Current Sensing** > **CT Bank 4-JK** option is available with order code option P1/P5 for Ground Currents.*

7.4 VOLTAGE SENSING

The Voltage Sensing menu provides the setup for all VTs (PTs) connected to the relay voltage terminals.

The 850-E can be connected to 4 VTs, i.e. three-phase VTs from either a Wye (Star) or a Delta connection, and one auxiliary VT (Slot J).

The 850-D can be connected to 2 three-phase VT banks from either a Wye (Star) or a Delta connection, and one auxiliary VT (Slots J and K).

Path: ***Setpoints*** > ***System*** > ***Voltage Sensing*** > ***Ph VT Bnk1-J2***

PHASE VT BANK NAME

Range: Any combination of 13 alphanumeric characters

Default: Ph VT Bnk 1-J2

Enter the name of the phase voltage from bank J2.

PHASE VT CONNECTION

Range: Wye, Delta, Single

Default: Wye

Select the type of phase VT connection to match the VTs (PTs) connected to the relay.

In cases when the distribution feeder has only one VT source (to measure single phase to neutral voltage or phase-to-phase voltage), the relay facilitates 3-phase power and energy measurements derived from pseudo 3-phase voltages. The pseudo 3-phase voltages are derived from any one VT source connected by considering a balanced 3-phase system (i.e. all three phase voltages and currents same in magnitude and placed 120 degrees apart with individual phases). Since the pseudo 3-phase voltage calculation relies on a balanced power system, the calculation accuracies are influenced by system unbalance conditions. In case of a perfectly balanced system, the calculated pseudo voltages are the same as the actual system voltages. However, the errors in the 3-phase power and from a single-phase reference input are only used for calculating the 3-phase metering quantities.

PSEUDO VOLTAGE REFERENCE

Range: Van, Vbn, Vcn, Vab, Vbc, Vca

Default: Van

This setting is only applicable when ***PHASE VT CONNECTION*** is set to `Single`. This means there is only one VT source available for metering. The relay allows any type of connection (A to neutral, B to neutral, C to neutral, A to B phase, B to C phase, and C to A phase) with a single VT reference input. It derives all 3-phase voltages from the provided single voltage reference input by considering a 3- phase balanced system.

When the setpoint ***PSEUDO VOLTAGE REFERENCE*** is configured to Van or Vab, single-phase VT inputs are connected to VT Channel 1. Similarly, when ***PSEUDO VOLTAGE REFERENCE*** is configured to Vbn(Vbc) and Vcn(Vca), the VT inputs are connected to VT Channel 2 and Channel 3, respectively.

> *Note:*
> *When Pseudo Voltage is used, sequence components (positive, negative and zero sequence voltage) displayed in the metering value are not a measured quantity, so sequence components should be ignored when* ***PHASE VT CONNECTION*** *is set to* `Single`*.*

PHASE VT SECONDARY

Range: 10.0 to 240.0 V in steps of 0.1 V

Default: 120.0 V

Select the output secondary voltage for phase VTs connected to the J2 bank.

PHASE VT RATIO

Range: 1.00 to 5000.00 in steps of 0.01

Default: 1.00

Select the phase VT ratio to match the ratio of the VTs connected to the J2 bank.

AUX. VT NAME

Range: Any combination of 13 alphanumeric characters

Default: Ax VT Bnk1-J2

Enter the name of the auxiliary voltage from bank J2.

AUX. VT CONNECTION

Range: Van, Vbn, Vcn, Vab, Vbc, Vca, Vn

Default: Van

Select the voltage type corresponding to the one applied to the Aux VT relay terminals from bank J2. Select Vn (neutral voltage), if the neutral voltage is applied to the relay auxiliary VT.

AUX. VT SECONDARY

Range: 10.0 to 240.0 V in steps of 0.1 V

Default: 120.0 V

Select the output secondary voltage of the aux. VT connected to the aux. VT input from bank J2.

AUX. VT RATIO

Range: 1.00 to 5000.00 in steps of 0.01

Default: 1.00

Select the aux. VT ratio to match the ratio of the VT connected to the aux. VT input from bank J2.

Note:
*The nominal **PHASE VT SECONDARY** and the **AUX VT SECONDARY** voltage settings are the voltages across the phase VT terminals and the auxiliary VT terminals correspondingly when nominal voltage is applied.*

Note:
*For example, on a system of 13.8kV nominal primary voltage, and a 14400:120 volt VT in a Delta connection, the secondary voltage would be 115V, i.e. (13800/14400)*120. For a Wye connection, the voltage value entered must be the phase to neutral voltage which would be 115/√3 = 66.4 V.*

Note:
On a 14.4 kV system with a Delta connection and a VT primary to secondary turns ratio of 14400:120, the voltage value entered would be 120 V, i.e. 14400/120.

7.5 POWER SENSING

The power computation is performed using the voltage and current inputs from the card inserted in slot J. In cases when the connected VTs and CTs have opposite polarity, the power sensing menu provides for inverting the power measurement.

Path: ***Setpoints*** > ***System*** > ***Power Sensing***

3PH VT BANK INPUT

Range: Dependent upon the order code

Default: J2-3VT

This setpoint selects the 3-phase VT inputs used for Power (X) computation.

3PH CT BANK INPUT

Range: Dependent upon the order code

Default: J1-3CT

This setpoint selects the 3-phase CT inputs for Power (X) computation.

PHASE CT&VT POLARITY

Range: Same, Inverse

Default: Same

When `Inverse` is selected, this setpoint inverts (multiplies phase currents by -1) the CT polarity for the phase currents from CT bank J1, with respect to the phase voltages from the VT bank J2.

> *Note:*
> *The setpoint for inversion of the power metering will be useful to avoid the physical inversion of the CT connections on the relay. As the power metering will affect the power directional elements, the user must determine the correct forward and reverse direction of the power, before setup.*

RESET EVENT ENERGY

Range: Off, Any FlexLogic operand

Default: Off

At the rising edge of the FlexLogic operand selected under this setpoint, all energy metering values (under ***Metering*** > ***Energy 1(X)*** > ***Energy***) are logged and reset to zero, and Reset Energy D/T is recorded and displayed.

The logged values are displayed as the Last Event Pos(Neg) WattHours and Last Event Pos(Neg) VarHours under ***Metering*** > ***Energy 1(X)*** > ***Energy Log***.

An application example could be monitoring of the total energy accumulated at the end of an event or a shift interval. An event/shift interval can be defined by the breaker status operand (open or closed) or, if applicable, by the operand derived by the Time of Day Timer element. If applicable, time-based shift schedules can be set in the Time of Day Timer element.

7.6 POWER SYSTEM

Path: ***Setpoints*** > ***System*** > ***Power System***

NOMINAL FREQUENCY

Range: 60 Hz, 50 Hz

Default: 60 Hz

The power system ***NOMINAL FREQUENCY*** is used as a default to set the digital sampling rate if the system frequency cannot be measured from available AC signals. This may happen if the signals selected for frequency tracking are not present, or a valid frequency is not detected. Before reverting to the nominal frequency, the frequency tracking algorithm holds the last valid frequency measurement for a safe period of time while waiting for the signals to reappear or for the distortions to decay.

PHASE ROTATION

Range: ABC, ACB

Default: ABC

The selection of the PHASE ROTATION setting must match the power system phase rotation. The phase sequence setting is required to properly calculate sequence components and power parameters. Note that this setting informs the relay of the actual system phase sequence, either ABC or ACB. CT and VT inputs on the relay labeled as a, b, and c, must be connected to system phases A, B, and C for correct operation.

FREQUENCY TRACKING

Range: Disabled, Enabled

Default: Enabled

The frequency reference is provided by composite signal derived by the Clarke transformation ($V_{FREQUENCY} = (2V_A – V_B – V_C) / 3$) for better performance during fault, open pole, and VT and CT fail conditions.

If present, the three-phase voltages are used for frequency tracking. Phase A voltage is used as a phase reference.

FREQUENCY TRACKING is switched automatically by an algorithm, to the three-phase currents (or auxiliary voltage signal for the tie-breaker configuration), if the frequency detected from the three-phase voltage inputs is declared invalid. The switching is not performed if the frequency from the alternative reference signal is detected invalid.

Upon detecting valid frequency on the main frequency and phase reference signal, tracking is switched back to that reference.

> *Note:*
> ***FREQUENCY TRACKING*** *should be set to* `Disabled` *only under very unusual circumstances. Consult the factory for special variable-frequency applications.*

COST OF ENERGY

Range: Range: 0.1 to 100.0 c/kWh in step of 0.1 c/kWh

Default: 5.0 c/kWh

This setpoint allows selection of the cost of energy in cents per kilowatthour.

7.7 BREAKERS

The status of each winding breaker is detected by monitoring the state of either one, or two contact inputs. We recommend you monitor the status of the breaker using both breaker auxiliary contacts 52a, and 52b. However using only one of them is also acceptable.

The breaker connection/disconnection to/from the power system is provided by monitoring the contact input ***BKR CONNECTED***. If the contact input is asserted, the breaker is considered to be connected to the primary system. When the breaker is determined to be disconnected, the breaker state is shown to be neither open, nor closed. The trolley is integrated with a circuit breaker (CB), which works as a Disconnect Switch. CB Trolley status based on the contact input selected under the ***CONNECTED*** and ***BKR TROLLEY*** setpoints.

Path: ***Setpoints*** > ***System*** > ***Breakers***

NAME

Range: Up to 13 alphanumeric characters

Default: BKRX

CONTACT INPUT 52a

Range: Off, Any FlexLogic operand

Default: Off

Selects the Contact Input connected to the Breaker auxiliary contact 52a.

CONTACT INPUT 52b

Range: Off, Any FlexLogic operand

Default: Off

Selects the Contact Input connected to the Breaker auxiliary contact 52b.

CONNECTED

Range: Off, Any FlexLogic operand

Default: Off

Select a contact input to show whether the breaker is connected (Racked-in, or disconnect switches switched-on), or disconnected (racked-out, or disconnect switches switched-off) from the system.

BKR TROLLEY

Range: Off, Any FlexLogic operand

Default: Off

Select a contact input to show whether the Breaker Trolley is connected or disconnected from the system.

TRIP RELAY SELECT

Range: Off, Any Output Relay

Default: Relay 1

This setting is typically available for two or more breaker applications. For single breaker applications, the setting is hidden and trip relay selection is defaulted to Relay 1.Any output relay from the list of available output relays can be programmed for breaker tripping action.

CLOSE RELAY SELECT

Range: Off, Relay X

Default: Relay 2

This setting is typically available for two or more breaker applications. For single breaker applications, the setting is hidden and close relay selection is defaulted to Relay 2.Any output relay from the list of available output relays can be programmed for breaker closing action.

Breaker status depending on availability of contacts 52a and 52b

52a Contact Configured	52b Contact Configured	Breaker Status	
		Open	Closed
Yes	Yes	52a contact open 52b contact closed	52a contact closed 52b contact open
Yes	No	52a contact open	52a contact closed
No	Yes	52b contact closed	52b contact open
No	No	Breaker Not Configured	Breaker Not Configured

Breaker status with both contacts 52a and 52b configured

52a Contact Configured	52b Contact Configured	Breaker Status
Off	On	BKR Opened
On	Off	BKR Closed
On	On	BKR Unknown State
Off	Off	BKR Unknown State

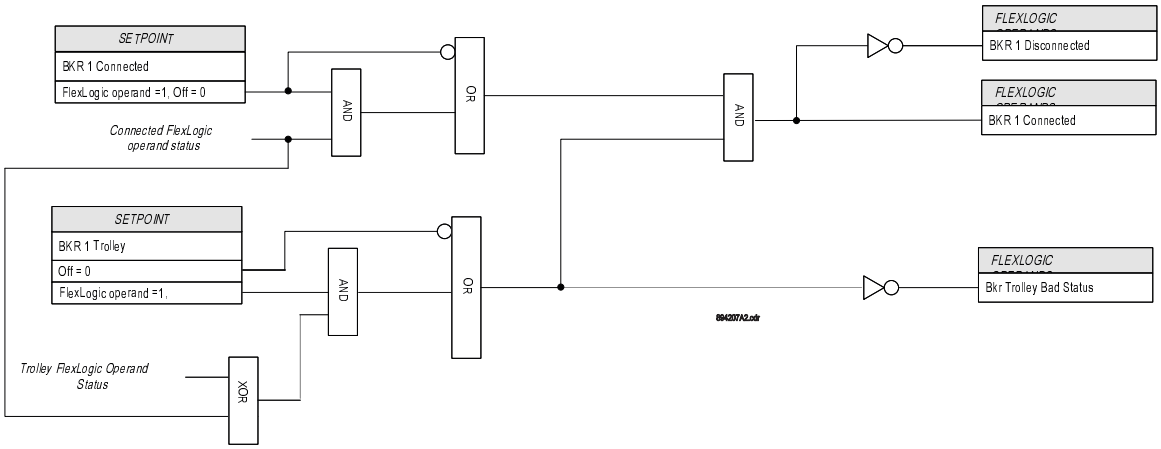

Figure 117: Breaker Connected/Disconnected (Racked-In/Racked-Out) Detection

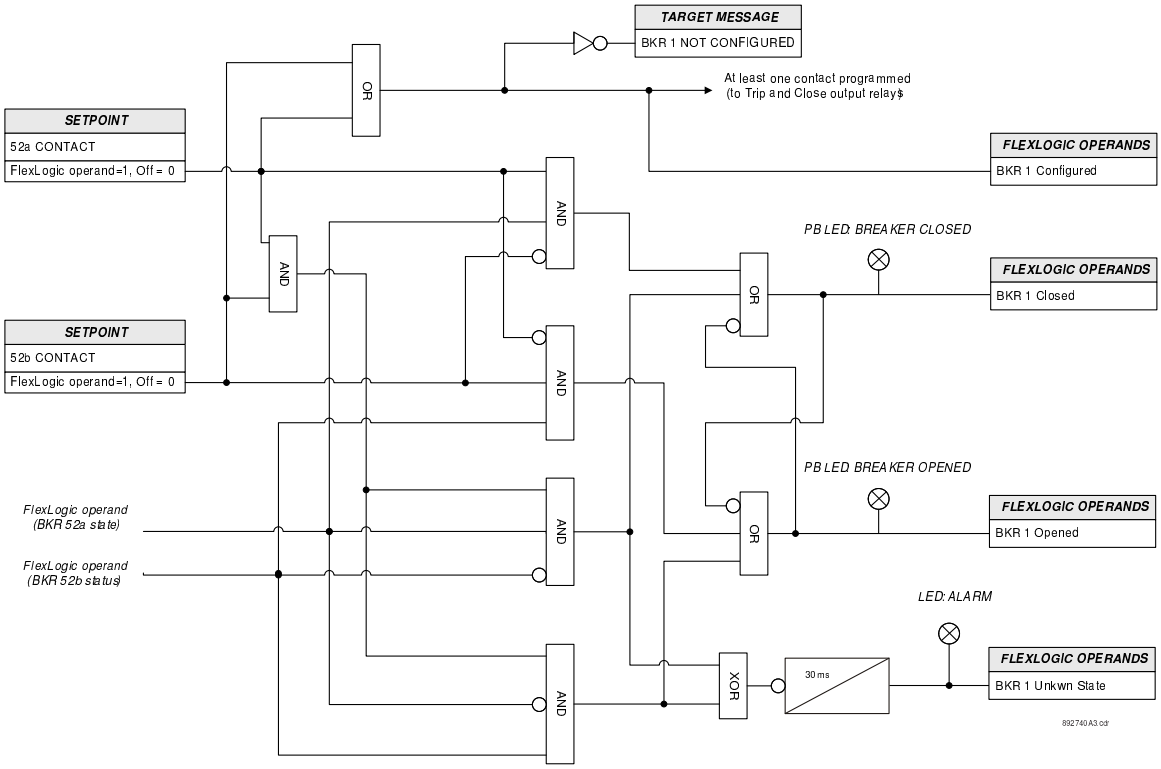

Figure 118: Breaker State Detection logic diagram

7.8 SWITCHES

The Single Line Diagram (SLD) relays can be configured with up to 9 disconnect switches. The disconnect switch detection is performed by monitoring the state/states of either one or preferably two contact inputs 89a and 89b. Monitoring the status of the switch using both auxiliary contacts 89a, and 89b is recommended, however using only one of them is also possible.When both contacts are programmed, the switch can be monitored for state discrepancy, i.e. both auxiliary contacts OFF, or both auxiliary contacts ON during operation. Discrepancy Alarm Delay can be programmed to reflect the transition of the switch during operation from Closed to Opened, and Opened to Closed. If no auxiliary contact discrepancy is detected after the time delay expires, the switch will be in one of its normal states, i.e. Opened or Closed. However, if contact inputs discrepancy is detected after the time delay expires, the relay will issue a `SW1(9) Discrepancy` target message and illuminate the ALARM LED. The switch discrepancy condition can be reset by the operand assigned under Reset Alarm setpoint, providing both contact inputs 89a and 89b show normal states on the relay.

Path: ***Setpoints*** > ***System*** > ***Switches*** > ***Switch 1(9)***

NAME

Range: 13 alphanumeric characters

Default: SW 1

Assign a user-defined name to the disconnect switch. This name is used in the SLD, flash messages related to disconnect switch 1, and the event recorder.

CONTACT INPUT 89a

Range: Off, Any FlexLogic operand

Default: Off

Select an operand (usually NO aux. contact wired to contact input in the relay) to reflect the status of the Disconnect Switch auxiliary contact 89a.

CONTACT INPUT 89b

Range: Off, Any FlexLogic operand

Default: Off

Select an operand (usually NC auxiliary contact wired to contact input in the relay) to reflect the status of the Disconnect Switch auxiliary contact 89b.

ALARM DELAY

Range: 0.000 to 6000.000 s in steps of 0.001 s

Default: 2.000 s

This setting specifies the required time interval to overcome transient disagreement between the 89a and 89b auxiliary contacts during disconnect switch operation. If transient disagreement still exists after this time has expired, SW1(9) Discrepancy FlexLogic operand is asserted for alarm and/or blocking purposes.

RESET ALARM

Range: Off, Any FlexLogic operand

Default: Off

Select an operand from the list of FlexLogic operands, which when asserted resets the Switch Discrepancy state. Please note that resetting the discrepancy alarm will work only after no discrepancy condition exists between the switch aux contacts 89a and 89b.

OPEN RELAY SELECT

Range: Off, Relay 1, ..., Relay X

Default: Off

This setpoints selects an output relay from the list of available output relays that is used to open the Disconnect Switch once an open command is issued either from the front panel or remotely. This output relay is controlled from the Switch Control menu.

CLOSE RELAY SELECT

Range: Off, Relay 1, ..., Relay X

Default: Off

This setpoint selects an output relay from the list of available output relays that is used to close the Disconnect Switch upon issued close command from either front panel or remotely. This output relay is controlled from Switch Control menu.

Note:
The selection of Output Relay for Open Relay Select and Close Relay Select has higher priority than other settings as follows: If an Output Relay is first set to `Operate`*"under a protection element for example, and then this same Output Relay is selected under either* ***Open Relay Select*** *or* ***Close Relay Select****, this Output Relay is automatically reverted to* `Do Not Operate` *and hidden from the menu of the protection element. Deselecting the Output Relay from* ***Open Relay Select*** *or* ***Close Relay Select*** *unhides the output in the menu of the protection element showing the setting value* `Do Not Operate`*.*

EVENTS

Range: Disabled, Enabled

Default: Enabled

This setting disables or enables the disconnect switch operation events.

TARGETS

Range: Disabled, Self-Reset, Latched

Default: Enabled

This setting disables or enables the disconnect switch operation Targets.

The logic for Switch configuration and the Open, and Close status is shown in the following tables.

Switch configuration with Open and Close status

Contact Input 89a setpoint programming	Contact Input 89b setpoint programming	SwitchStatus	
		Open	Closed
Yes	Yes	89a contact open 89b contact closed	89a contact closed 89b contact open
Yes	No	89a contact open	89a contact closed
No	Yes	89b contact closed	89b contact open
No	No	Not Configured	Not Configured

Switch status with both contacts 89a and 89b programmed

89a Contact Status	89b Contact Status	Disconnect Switch Status
Off	On	SW[X] Opened
On	Off	SW[X] Closed
On	On	SW[X] Intermittent, SW[X] Discrepancy
Off	Off	SW[X] Intermittent, SW[X] Discrepancy

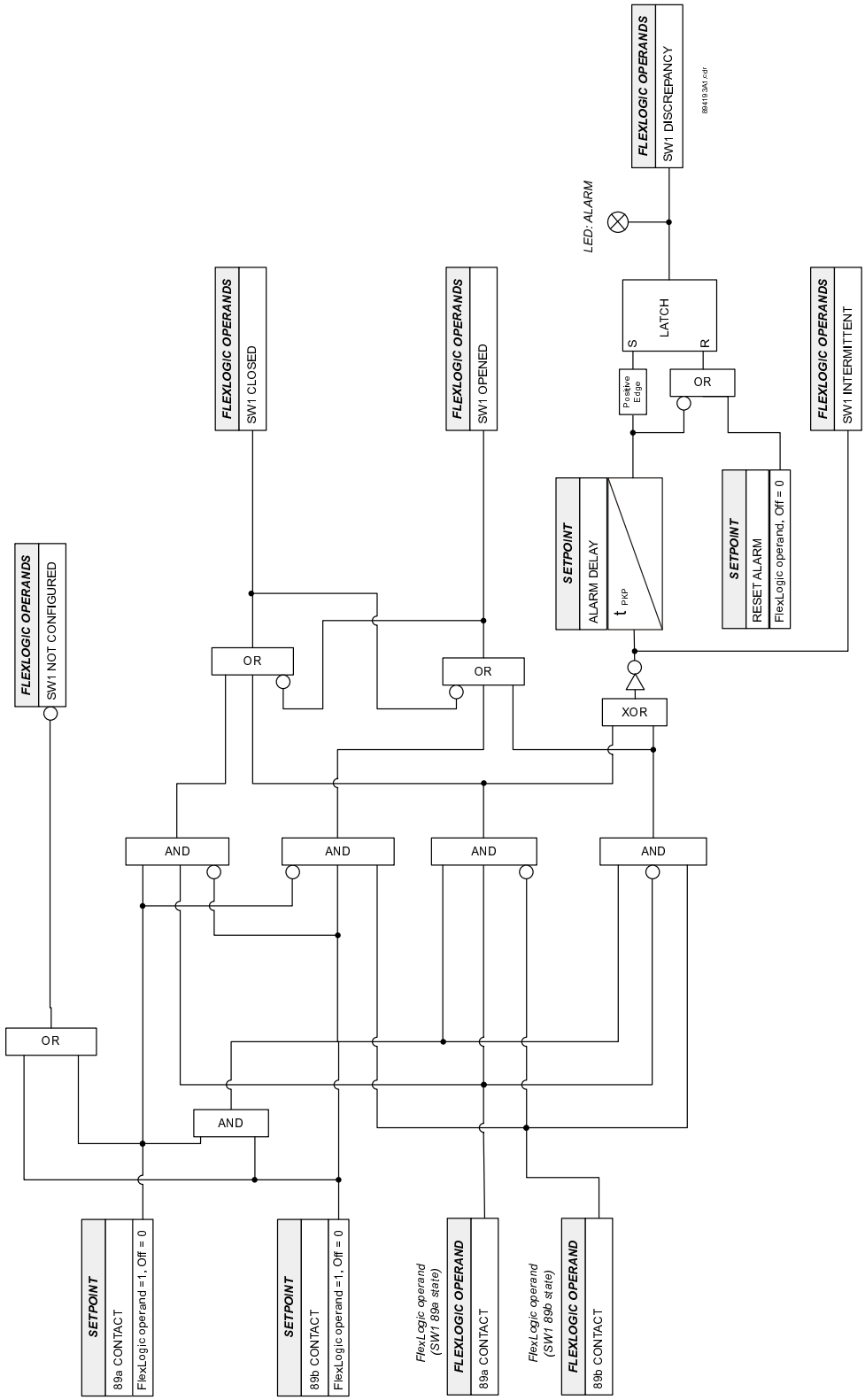

Figure 119: Disconnect Switch State Detection logic diagram

7.9 FLEXCURVES

The relay incorporates four programmable FlexCurves - FlexCurve A, B, C and D. The points for these curves are defined in the EnerVista D&I Setup software. User-defined curves can be used for Time Overcurrent protection in the same way as IEEE, IAC, ANSI, and IEC curves. Each of the four FlexCurves has 120-point settings for entering times to reset and operate, 40 points for reset (from 0 to 0.98 times the Pickup value) and 80 for operate (from 1.03 to 20 times the Pickup). This data is converted into two continuous curves by linear interpolation between data points.

Path: ***Setpoints*** > ***System*** > ***FlexCurves***

> *Note:*
> *Use EnerVista D&I Setup software to select, design or modify any of the Flexcurves*

Note:

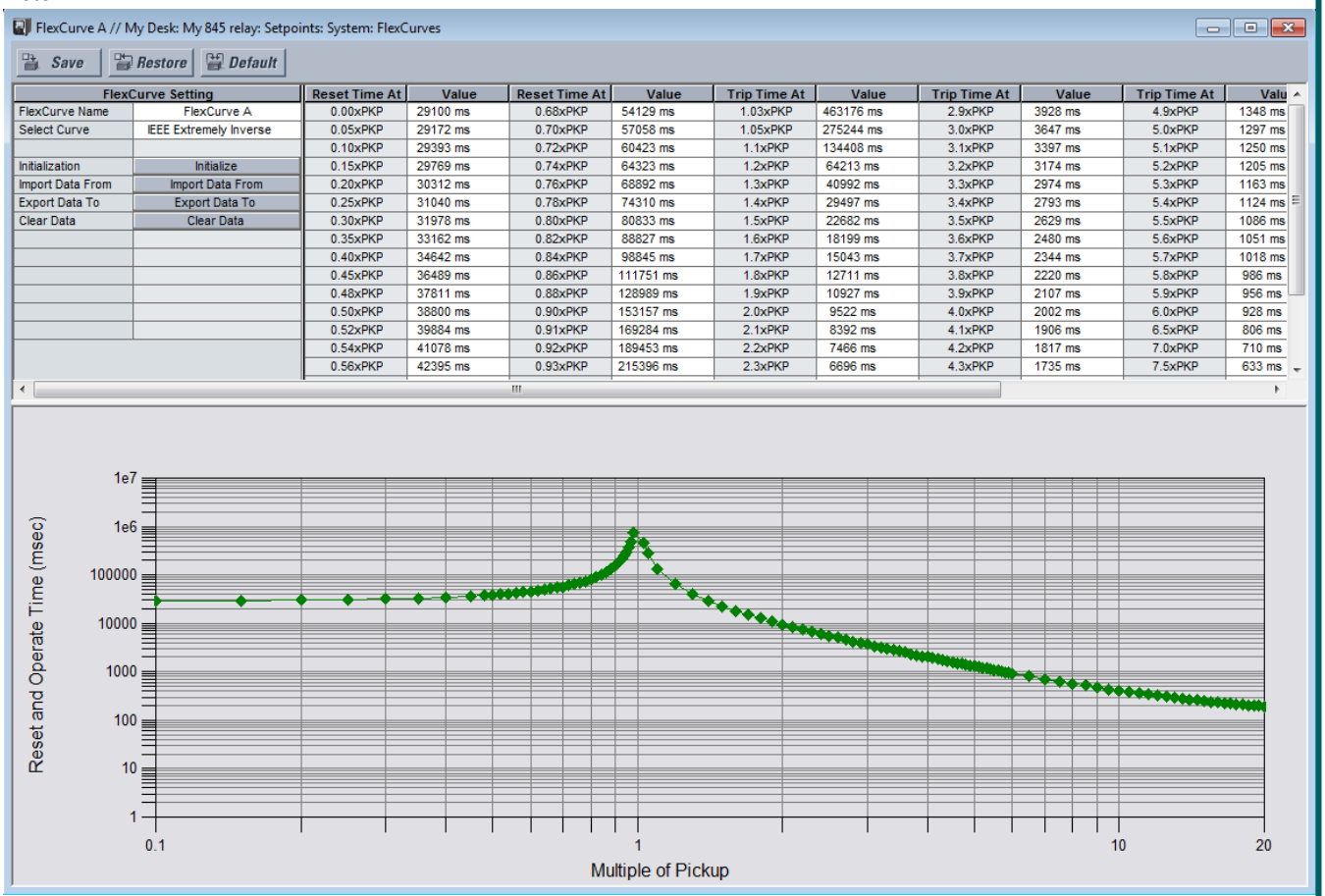

FlexCurve Setting		Reset Time At	Value	Reset Time At	Value	Trip Time At	Value	Trip Time At	Value	Trip Time At	Valu
FlexCurve Name	FlexCurve A	0.00xPKP	29100 ms	0.68xPKP	54129 ms	1.03xPKP	463176 ms	2.9xPKP	3928 ms	4.9xPKP	1348 ms
Select Curve	IEEE Extremely Inverse	0.05xPKP	29172 ms	0.70xPKP	57058 ms	1.05xPKP	275244 ms	3.0xPKP	3647 ms	5.0xPKP	1297 ms
		0.10xPKP	29393 ms	0.72xPKP	60423 ms	1.1xPKP	134408 ms	3.1xPKP	3397 ms	5.1xPKP	1250 ms
Initialization	Initialize	0.15xPKP	29769 ms	0.74xPKP	64323 ms	1.2xPKP	64213 ms	3.2xPKP	3174 ms	5.2xPKP	1205 ms
Import Data From	Import Data From	0.20xPKP	30312 ms	0.76xPKP	68892 ms	1.3xPKP	40992 ms	3.3xPKP	2974 ms	5.3xPKP	1163 ms
Export Data To	Export Data To	0.25xPKP	31040 ms	0.78xPKP	74310 ms	1.4xPKP	29497 ms	3.4xPKP	2793 ms	5.4xPKP	1124 ms
Clear Data	Clear Data	0.30xPKP	31978 ms	0.80xPKP	80833 ms	1.5xPKP	22682 ms	3.5xPKP	2629 ms	5.5xPKP	1086 ms
		0.35xPKP	33162 ms	0.82xPKP	88827 ms	1.6xPKP	18199 ms	3.6xPKP	2480 ms	5.6xPKP	1051 ms
		0.40xPKP	34642 ms	0.84xPKP	98845 ms	1.7xPKP	15043 ms	3.7xPKP	2344 ms	5.7xPKP	1018 ms
		0.45xPKP	36489 ms	0.86xPKP	111751 ms	1.8xPKP	12711 ms	3.8xPKP	2220 ms	5.8xPKP	986 ms
		0.48xPKP	37811 ms	0.88xPKP	128989 ms	1.9xPKP	10927 ms	3.9xPKP	2107 ms	5.9xPKP	956 ms
		0.50xPKP	38800 ms	0.90xPKP	153157 ms	2.0xPKP	9522 ms	4.0xPKP	2002 ms	6.0xPKP	928 ms
		0.52xPKP	39884 ms	0.91xPKP	169284 ms	2.1xPKP	8392 ms	4.1xPKP	1906 ms	6.5xPKP	806 ms
		0.54xPKP	41078 ms	0.92xPKP	189453 ms	2.2xPKP	7466 ms	4.2xPKP	1817 ms	7.0xPKP	710 ms
		0.56xPKP	42395 ms	0.93xPKP	215396 ms	2.3xPKP	6696 ms	4.3xPKP	1735 ms	7.5xPKP	633 ms

Figure 120: Flexcurve setpoints

The following table for FlexCurves A, B, C, and D details the 120 points as well as the characteristic for each of them, and a blank cell to write the time value when the operation (for $I > I_{pickup}$) or the reset (for $I < I_{pickup}$) is required.

RESET TIME ms		RESET TIME ms		OPERATE TIME ms		OPERATE TIME ms		OPERATE TIME ms		OPERATE TIME ms	
0.00		0.68		1.03		2.9		4.9		10.5	
0.05		0.70		1.05		3.0		5.0		11.0	
0.10		0.72		1.1		3.1		5.1		11.5	
0.15		0.74		1.2		3.2		5.2		12.0	
0.20		0.76		1.3		3.3		5.3		12.5	
0.25		0.78		1.4		3.4		5.4		13.0	
0.30		0.80		1.5		3.5		5.5		13.5	
0.35		0.82		1.6		3.6		5.6		14.0	
0.40		0.84		1.7		3.7		5.7		14.5	
0.45		0.86		1.8		3.8		5.8		15.0	
0.48		0.88		1.9		3.9		5.9		15.5	
0.50		0.90		2.0		4.0		6.0		16.0	
0.52		0.91		2.1		4.1		6.5		16.5	
0.54		0.92		2.2		4.2		7.0		17.0	
0.56		0.93		2.3		4.3		7.5		17.5	
0.58		0.94		2.4		4.4		8.0		18.0	
0.60		0.95		2.5		4.5		8.5		18.5	
0.62		0.96		2.6		4.6		9.0		19.0	
0.64		0.97		2.7		4.7		9.5		19.5	
0.66		0.98		2.8		4.8		10.0		20.0	

The first two columns (40 points) correspond to the RESET curve. The other 4 columns, with 80 points in total, correspond to the OPERATE curve. The reset characteristic values are between 0 and 0.98xPKP, and the operation values are between 1.03 and 20xPKP.

The final curve is created by means of a linear interpolation from the defined points. This is a separate process for the RESET and the OPERATE curve.

The definition of these points is performed in a separate module from the relay, using a configuration program included in EnerVista D&I Setup software, which incorporates a graphical environment for viewing the curve, thus making it easy to create.

Note:
*The relay using a given FlexCurve applies linear approximation for times lying between the user-entered points. Therefore, special care must be taken when setting the points close to a Pickup multiple of 1; that is, 0.97*Ipickup and 0.98*Ipickup should be set to a similar value as 1.03*Ipickup. Otherwise, the thermal model may incorrectly estimate the TCU% level resulting in undesired behavior.*

FLEXCURVE A, B, C, D CONFIGURATION WITH EnerVista D&I Setup software

EnerVista D&I Setup software allows for easy configuration and management of FlexCurves and their associated data points. Prospective FlexCurves can be configured from a selection of standard curves to provide the best approximate fit, then specific data points can be edited afterwards. Alternately, curve data can be imported from a specified file (.csv format) by selecting the Import Data From setting.

Curves and data can be exported, viewed, and cleared by clicking the appropriate buttons. FlexCurves A, B, C, and D are customized by editing the operating time (ms) values at pre-defined per-unit current multiples. Note that the pickup multiples start at zero (implying the “reset time”), operating time below Pickup, and operating time above Pickup.

7.9.1 RECLOSER CURVE EDITING

Recloser curve selection is special in that recloser curves can be shaped into a composite curve with a minimum response time and a fixed time above a specified Pickup multiple. There are many recloser curve types supported. These definite operating times are useful to coordinate operating times, typically at higher currents and where upstream and downstream protective devices have different operating characteristics. The recloser curve configuration window shown in the next figure appears when the Initialize From setting is set to **Recloser Curve**.

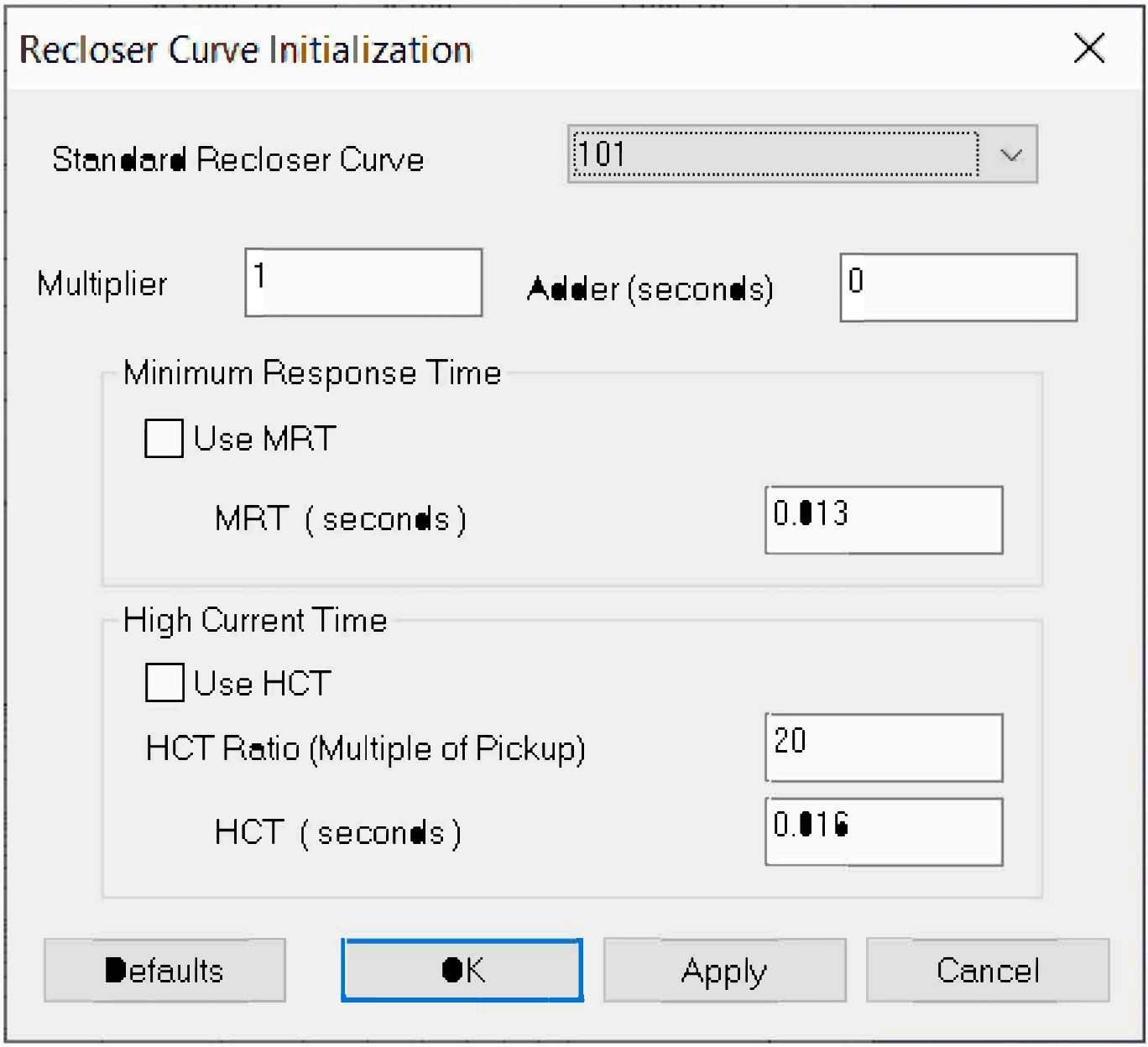

Figure 121: Recloser Curve Initialization

Multiplier: Scales (multiplies) the curve operating times.

Adder: Adds the time specified in this field (in ms) to each curve operating time value.

Minimum Response Time (MRT): If enabled, the MRT setting defines the shortest operating time even if the curve suggests a shorter time at higher current multiples. A composite operating characteristic is effectively defined. For current multiples lower than the intersection point, the curve dictates the operating time; otherwise, the MRT does. An information message appears when attempting to apply an MRT shorter than the minimum curve time.

High Current Time: Sets a pickup multiple from which point onwards the operating time is fixed. This is normally only required at higher current levels. The **HCT Ratio** defines the high current pickup multiple; the **HCT** defines the operating time.

Note:
The multiplier and adder settings only affect the curve portion of the characteristic and not the MRT and HCT settings. The HCT settings override the MRT settings for multiples of Pickup greater than the HCT ratio.

Note:
The "Total Multiplier" used for calculation is equal to the product of the multiplier in the TOC element and the multiplier in the recloser curve.

EXAMPLE

A composite curve can be created from the GE_111 standard with MRT = 200 ms and HCT initially disabled and then enabled at eight (8) times Pickup with an operating time of 30 ms. At approximately four (4) times Pickup, the curve operating time is equal to the MRT and from then onwards the operating time remains at 200 ms (see below).

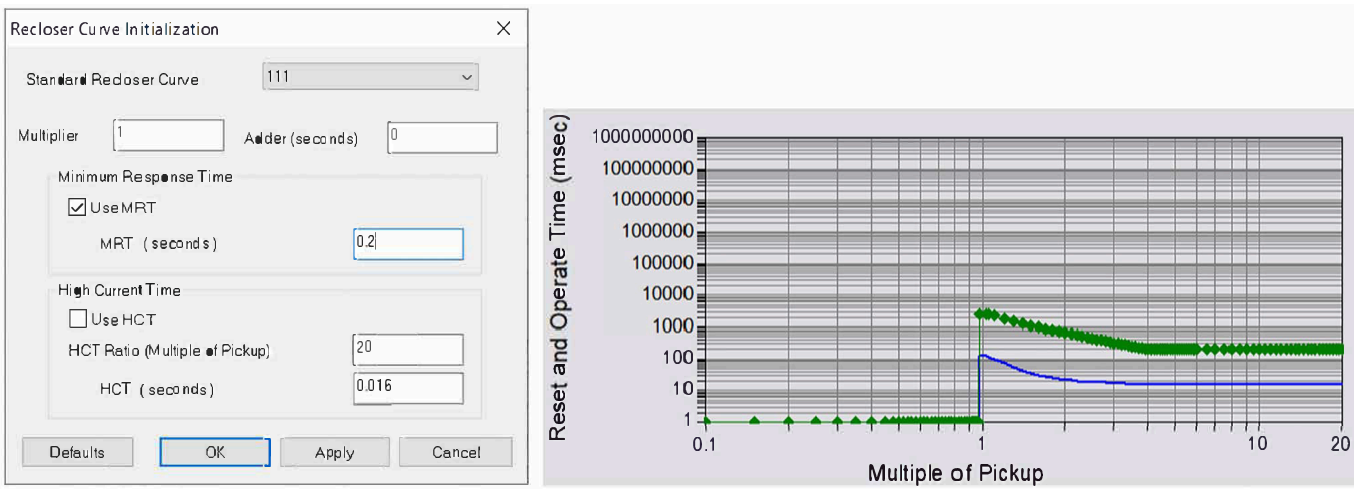

Figure 122: Composite Recloser Curve with HCT Disabled

With the HCT feature enabled, the operating time reduces to 30 ms for Pickup multiples exceeding 8 times Pickup.

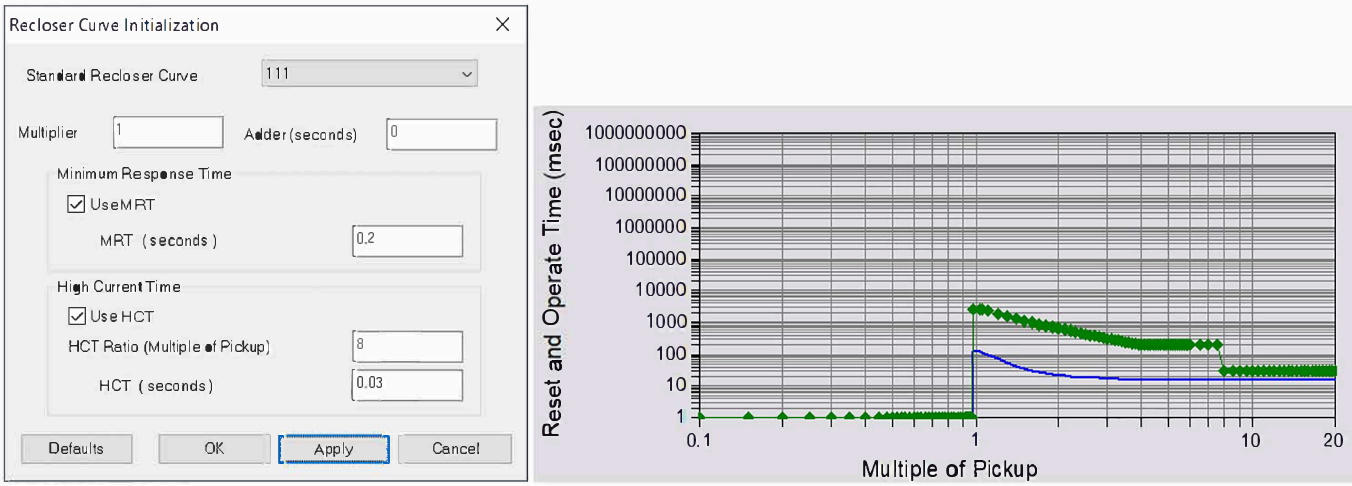

Figure 123: Composite Recloser Curve with HCT Enabled

Configuring a composite curve with an increase in operating time at increased Pickup multiples is not allowed. If this is attempted, the software generates an error message and discards the proposed changes.

7.9.2 STANDARD RECLOSER CURVES

STANDARD RECLOSER CURVES

The standard recloser curves are displayed in the following graphs.

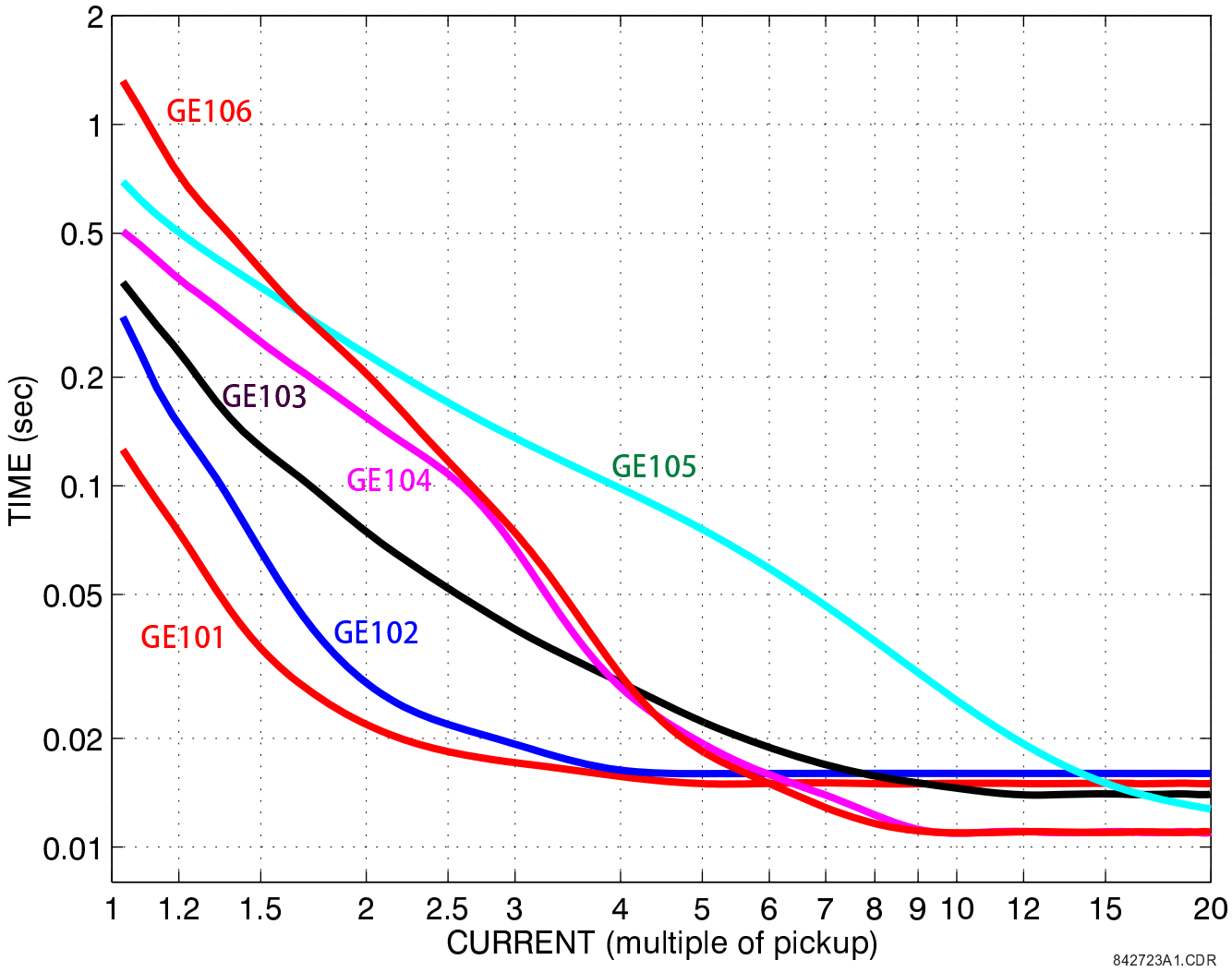

Figure 124: Recloser Curves GE101 TO GE106

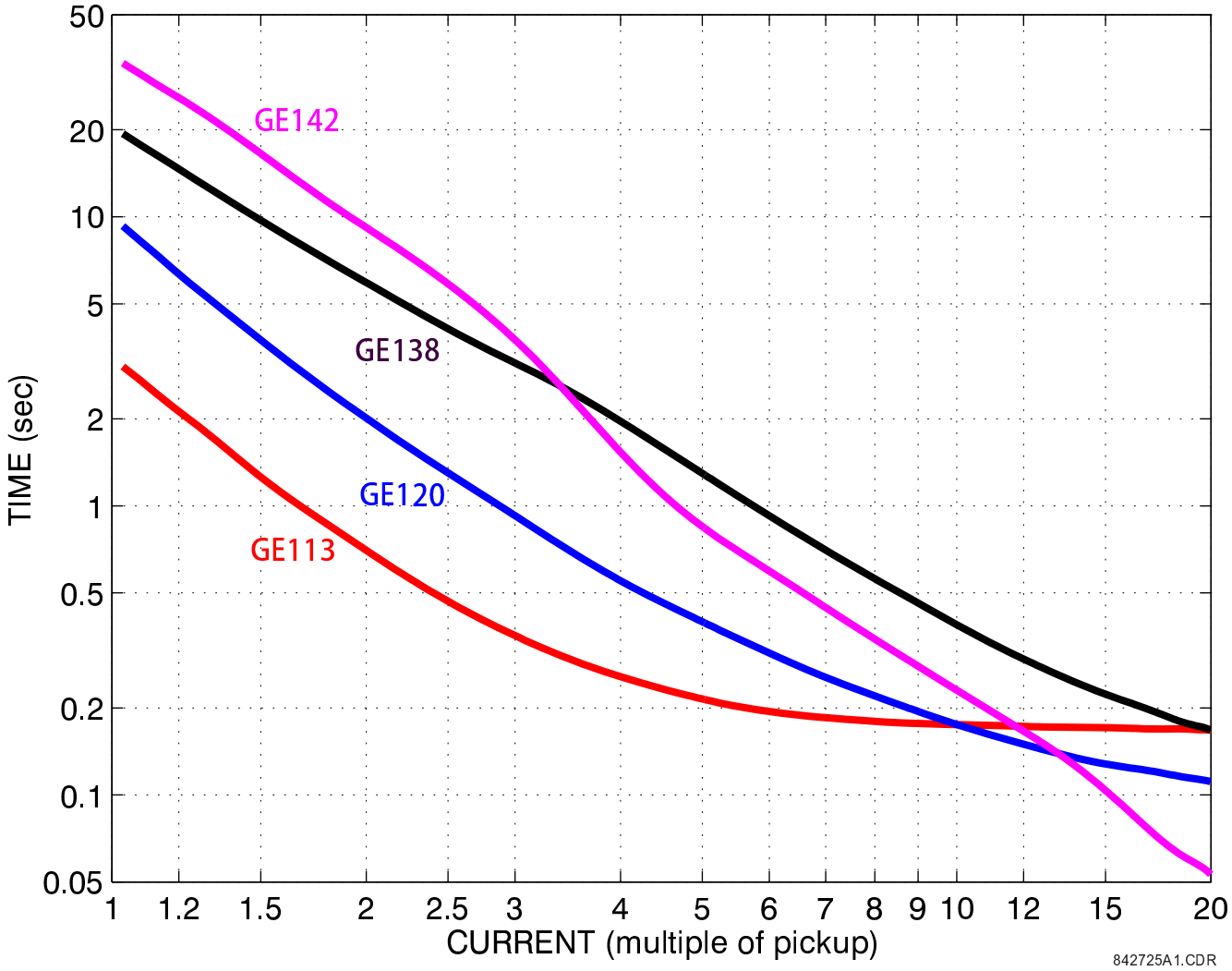

Figure 125: Recloser Curves GE113, GE120, GE138 AND GE142

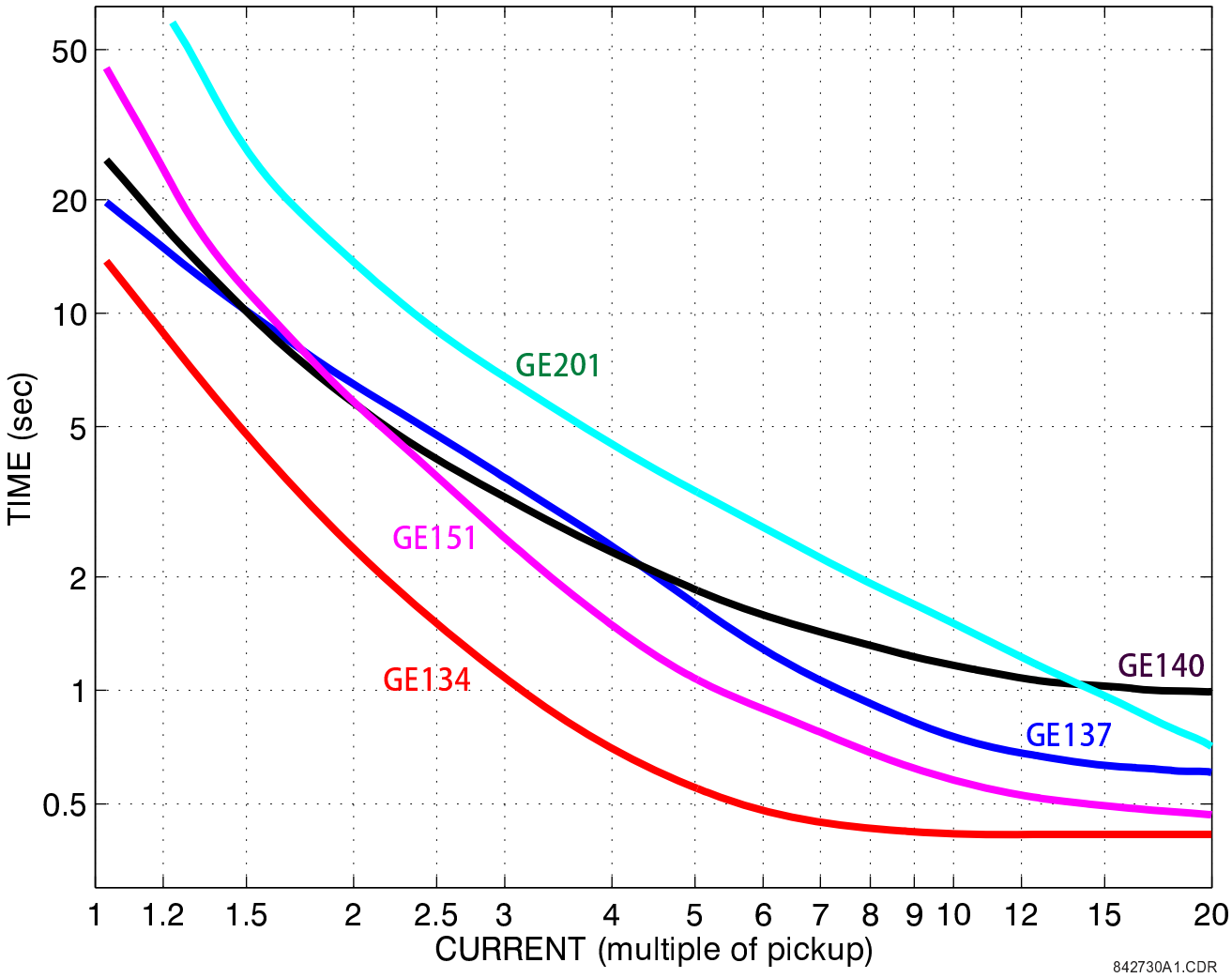

Figure 126: Recloser Curves GE134, GE137, GE140, GE151 AND GE201

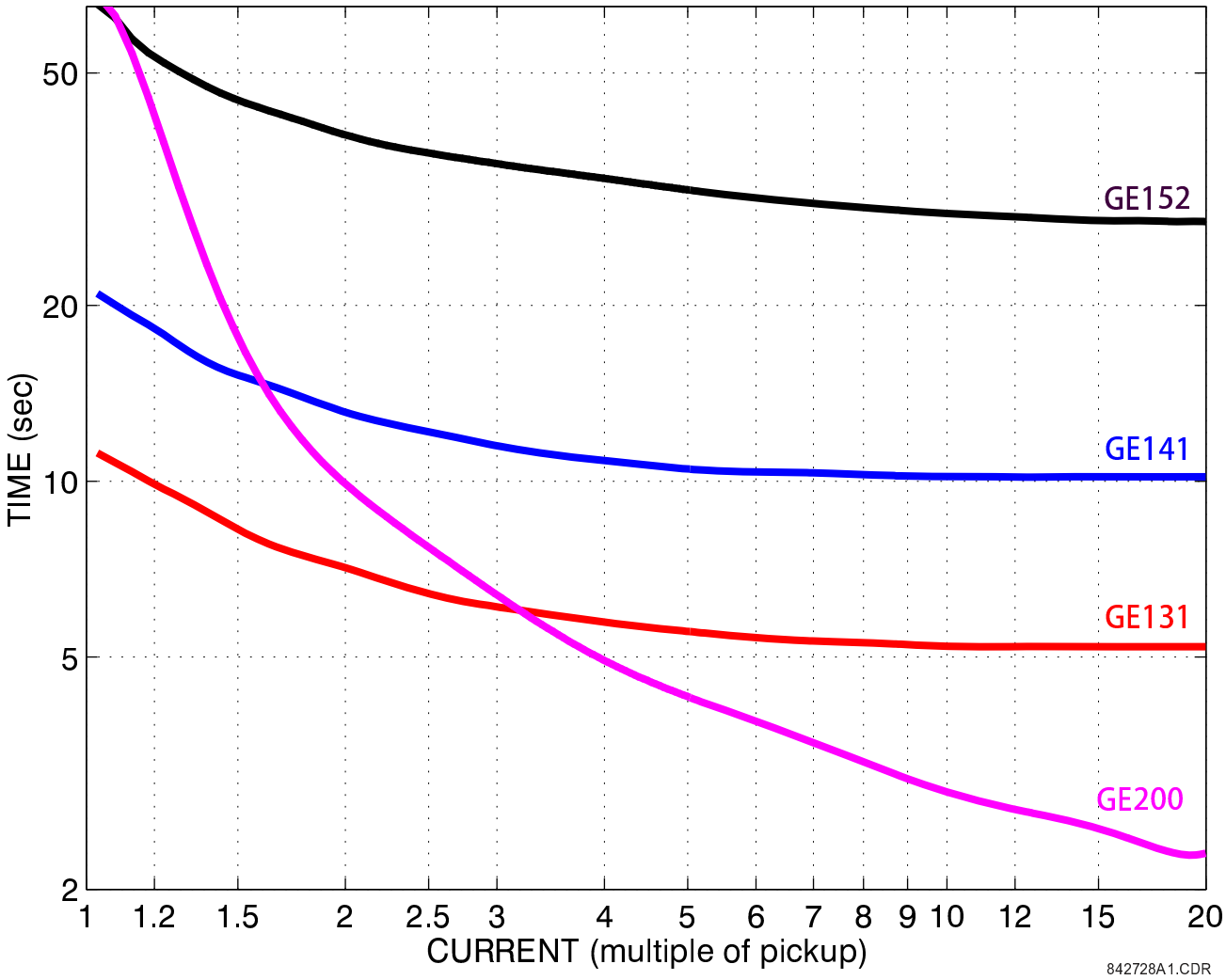

Figure 127: Recloser Curves GE131, GE141, GE152, AND GE200

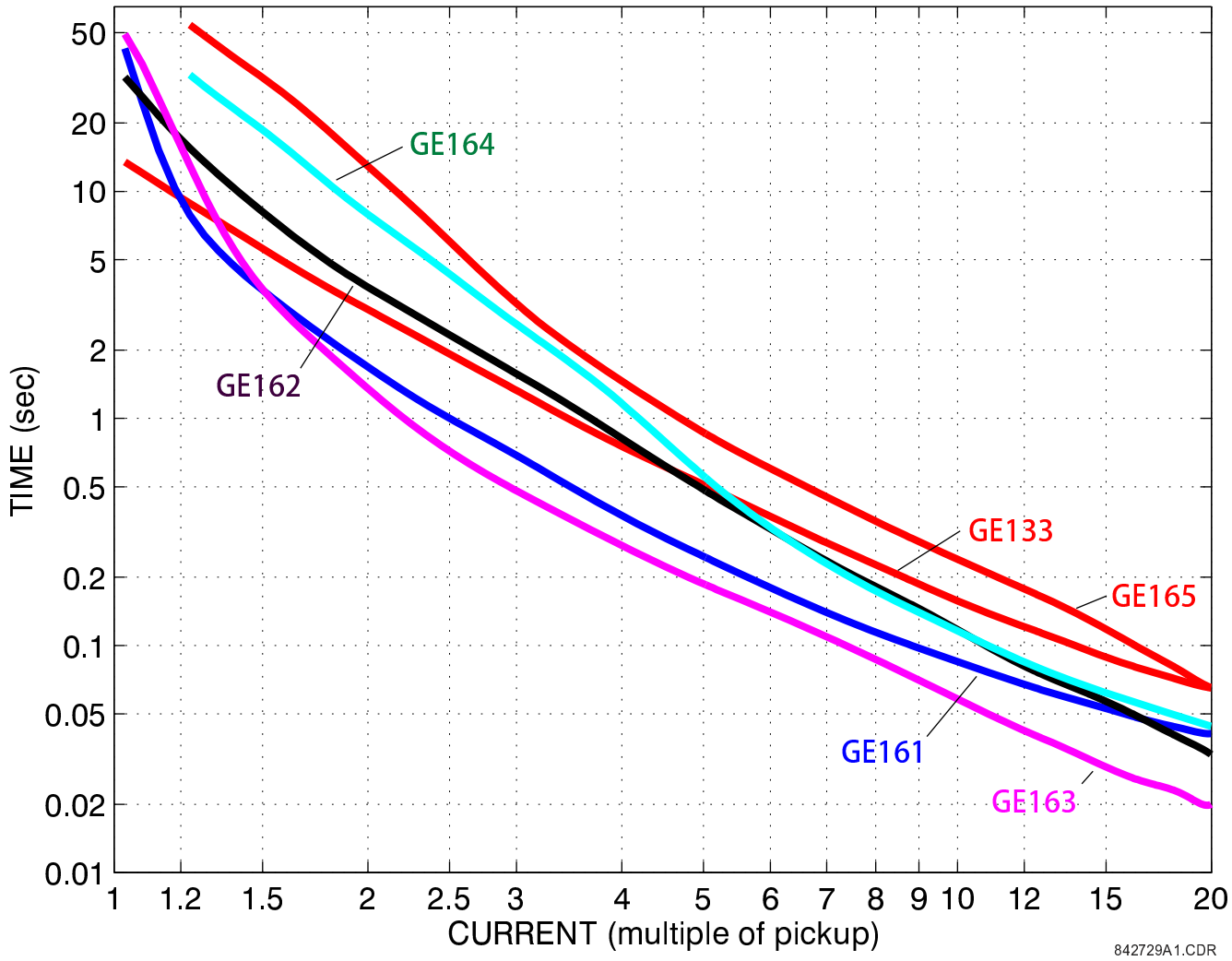

Figure 128: Recloser Curves GE133, GE161, GE162, GE163, GE164 and GE165

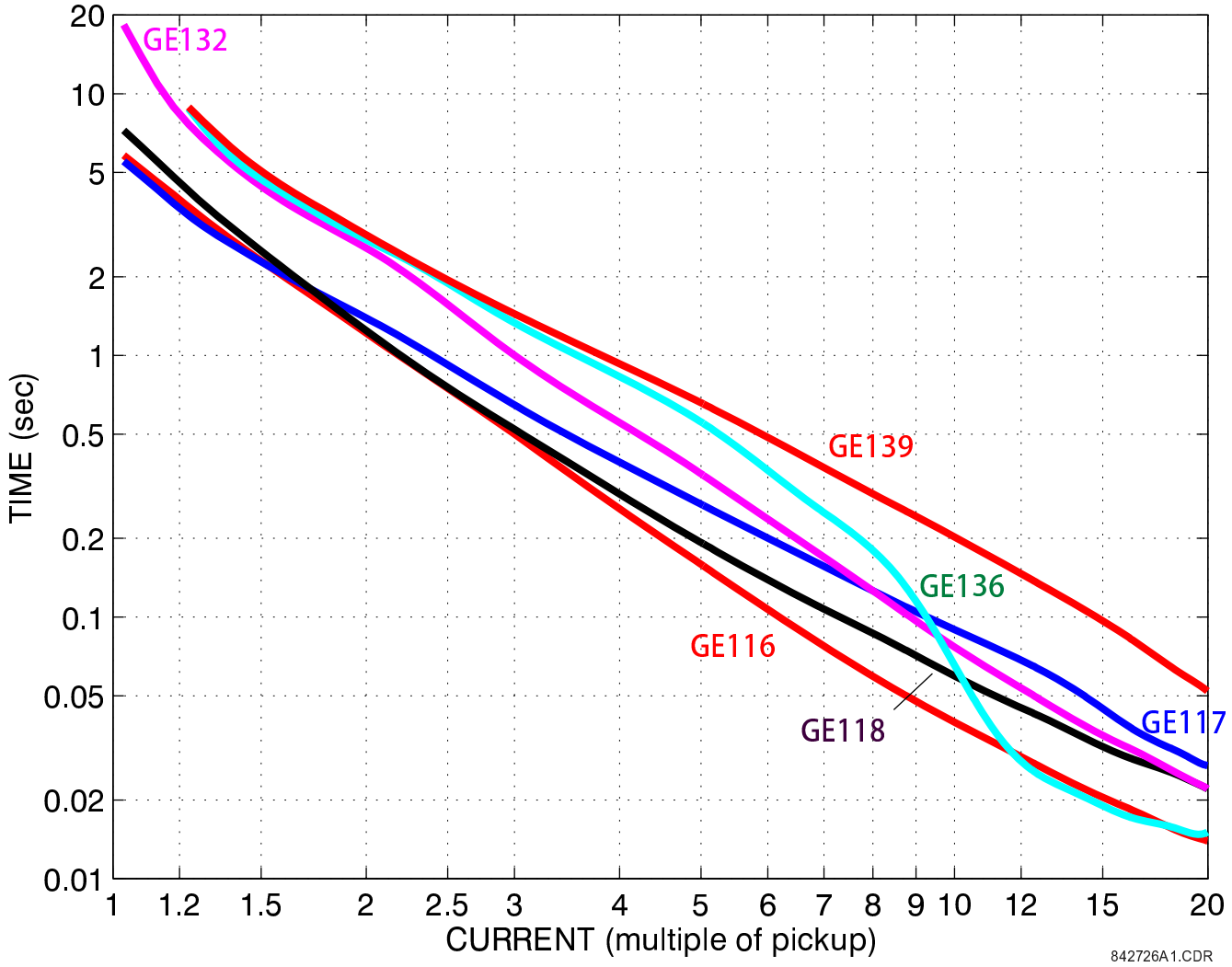

Figure 129: Recloser Curves GE116, GE117, GE118, GE132, GE136, AND GE139

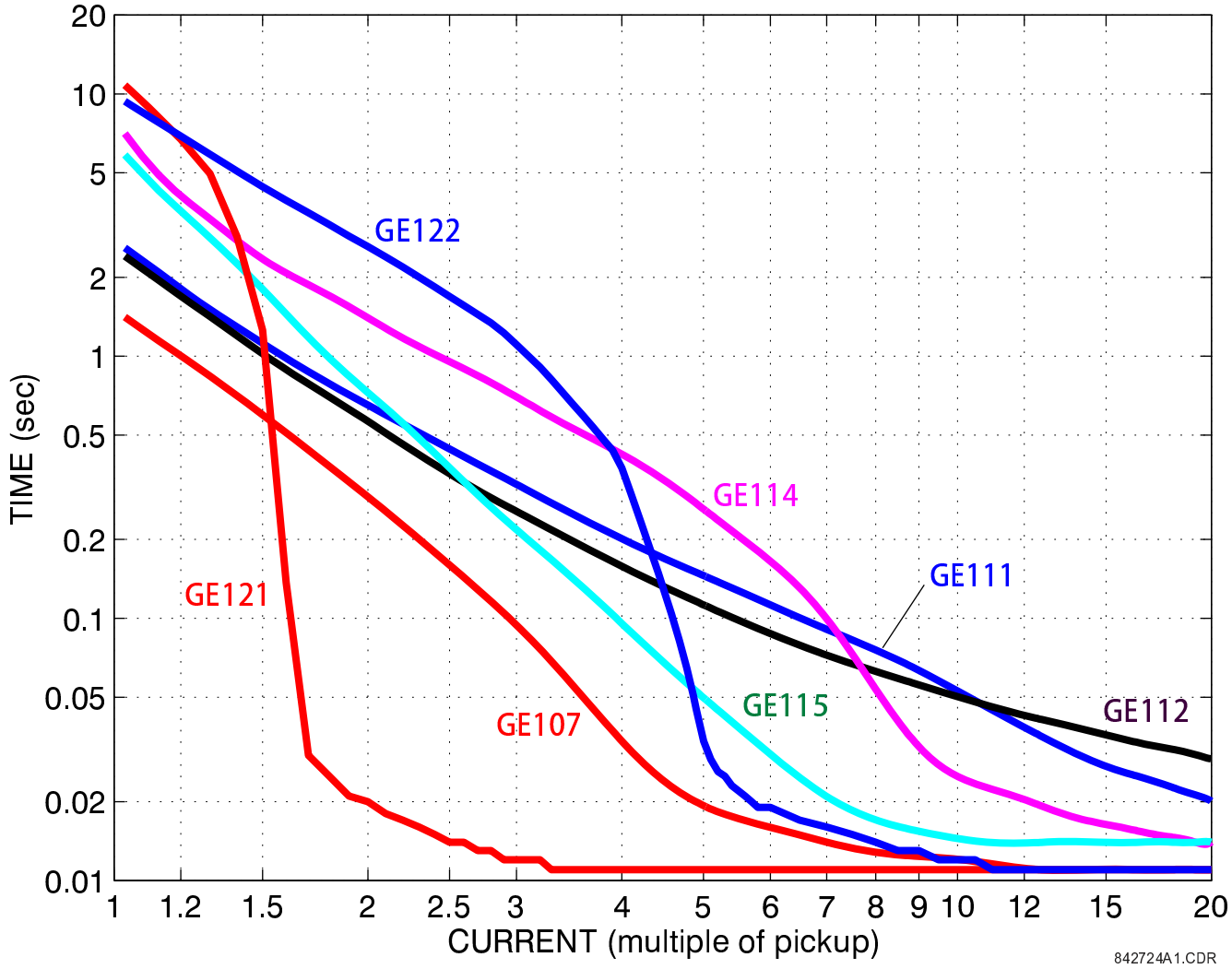

Figure 130: Recloser Curves GE107, GE111, GE112, GE114, GE115, GE121, AND GE122

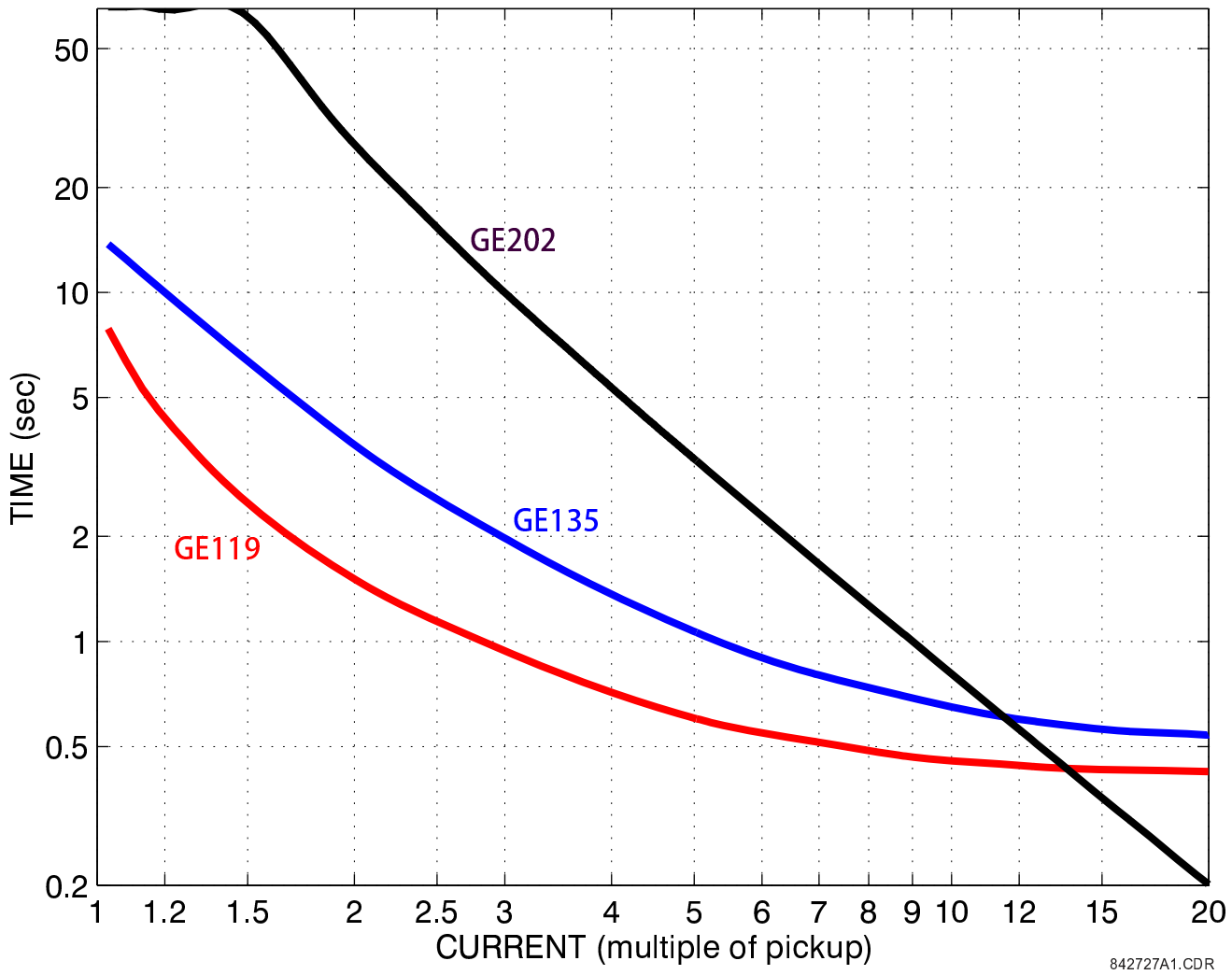

Figure 131: Recloser Curves GE119, GE135, AND GE202

CHAPTER 8

INPUT AND OUTPUT SETPOINTS

8.1 CHAPTER OVERVIEW

This chapter describes the Device setpoint menu settings in detail.

This chapter contains the following sections:

Chapter Overview 273

Inputs 274

Outputs 280

8.2 INPUTS

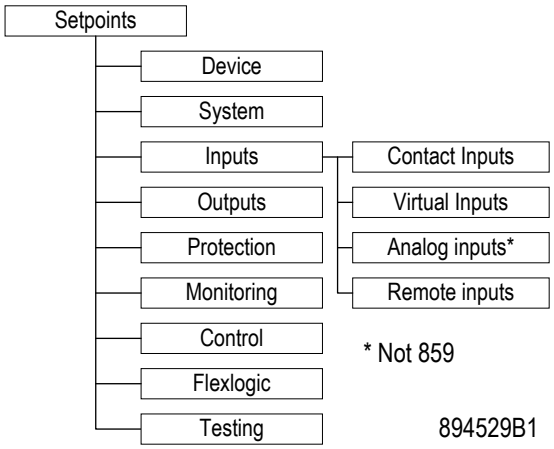

Figure 132: Inputs Display Hierarchy

8.2.1 CONTACT INPUTS

The relay is equipped with a number of Contact Inputs, specified by the Order Code. These can be used to provide a variety of functions such as for circuit breaker control, external trips, blocking of protection elements, etc. Contact inputs accept wet and dry input signals. A wet type contact input signal requires an external DC voltage source. A dry type contact input signal uses an internal DC voltage source. Depending on the DC source level, you can select the voltage threshold (17V, 33V, 84V, 166V). The Contact Inputs can be located on the HV I/O and Arc Flash cards located on slots B or C or F or G or H or all.

Note:
The maximum load current that can be delivered by the relay +24 V voltage supply is 100 mA. When the internal +24 V supply is used, the current limitations of the 24V supply must be considered.

The Contact Inputs are either open or closed with a programmable debounce time to prevent false operation from induced voltage. The debounce time is adjustable as per manufacturer specifications.

A raw status is scanned for all Contact Inputs synchronously at the constant rate of one protection pass (1/8 cycle) as shown in the figure below. The DC input voltage is compared to a user-settable threshold. A new Contact Input state must be maintained for a user-configurable debounce time in order for the relay to validate the new contact state. In the figure below, the debounce time is set at 2.5 ms; thus the 3rd sample in a row validates the change of state (mark no. 2 in the diagram). Once validated (debounced), the new state will be declared and a FlexLogic operand will be asserted at the time of a new protection pass. A time stamp of the first sample in the sequence that validates the new state is used when logging the change of the Contact Input into the Event Recorder (mark no. 1 in the diagram).

Protection and control elements, as well as FlexLogic equations and timers, are executed eight times in a power system cycle. The protection pass duration is controlled by the frequency tracking mechanism. The FlexLogic operand reflecting the debounced state of the contact is updated at the protection pass following the debounce (marked no. 2 on the figure below). The update is performed at the beginning of the protection pass so all protection and control functions, as well as FlexLogic equations, are fed with the updated states of the Contact Inputs.

The FlexLogic operand response time to the Contact Input change is related to the debounce time setting plus up to one protection pass (variable and depending on system frequency if frequency tracking enabled). For example, 8 protection passes per cycle on a 60 Hz system correspond to a protection pass every 2.1 ms. With a contact debounce time setting of 3.0 ms, the FlexLogic™ operand-assert time limits are: 4.2 + 0.0 = 4.2 ms and 4.2 + 2.1 = 6.3 ms. The 4.2 ms is the minimum protection pass period that contains a debounce time, 3.0 ms.

Regardless of the contact debounce time setting, the Contact Input event is time-stamped with 1 protection pass accuracy using the time of the first scan corresponding to the new state (mark no. 1 below). Therefore, the time stamp reflects a change in the DC voltage across the Contact Input terminals that was not accidental as it was subsequently validated using the debounce timer. The debounce algorithm is symmetrical: the same procedure and debounce time are used to filter the LOW-HIGH (marks no.1 and 2 in the figure below) and HIGH-LOW (marks no. 3 and 4 below) transitions.

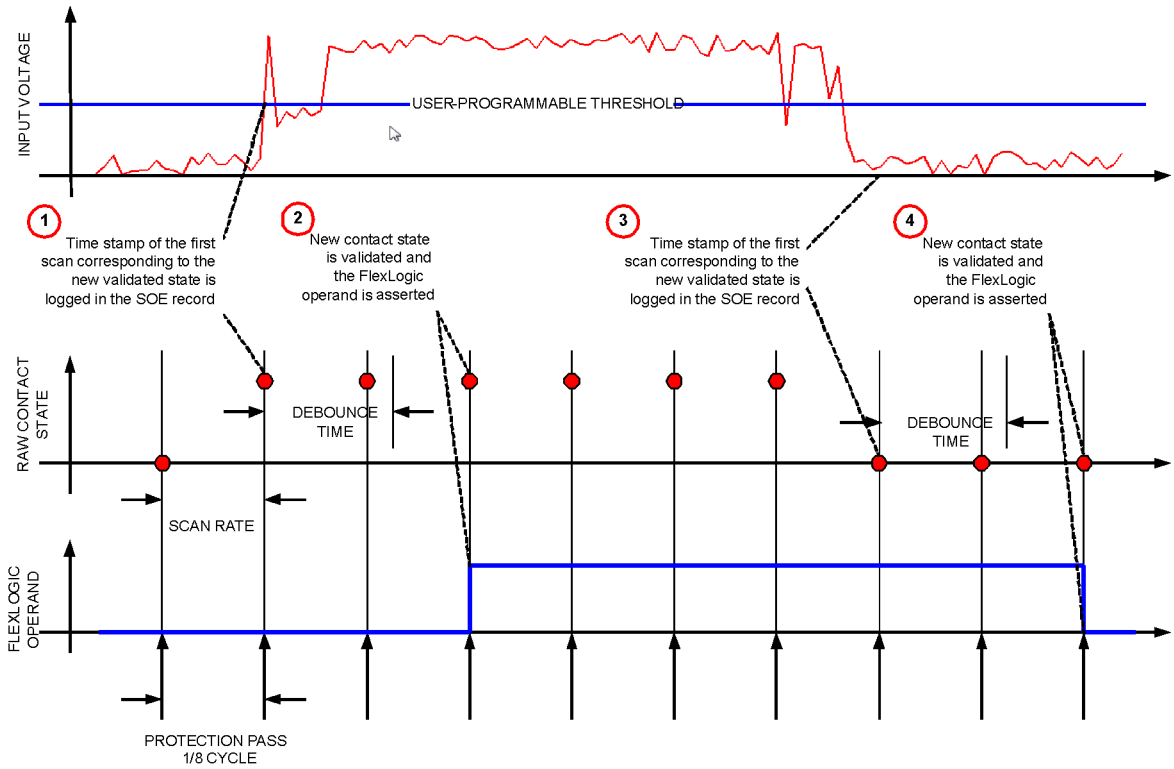

Figure 133: Contact Input Debouncing Mechanism and Time-stamping Sample Timing

Path: ***Setpoints*** > ***Inputs*** > ***Contact Inputs***

The Contact Inputs menu contains configuration settings for each Contact Input as well as voltage threshold for all Contact Inputs.

..\Inputs\Contact Inputs				
Item Name				
CI Voltage Threshold				
Contact Input 1				
Contact Input 2				
Contact Input 3				
Contact Input 4				
Contact Input 5				
Contact Input 6				
Contact Input 7				
Contact Input 8				
Contact Input 9				
Contact Input 10				
CI DC Volt	CI 1	CI 2	CI 3	>>

Path: ***Setpoints*** > ***Inputs*** > ***Contact Inputs*** > ***CI Voltage Threshold***

Depending on the order code, Voltage Threshold value can be configured for all the Contact Inputs (Slot F/G/H with order code A or M or F) or for each group of Contact Inputs (Slot F/G/H with order code B or K and Slot B/C with order code C).

As an example, the following section shows description of the settings for Slot F with order code A, Slot G with order code B and Slot B with order code C.

..\Contact Inputs\CI Voltage Threshold		
Item Name	Value	Unit
Voltage Threshold/Slot F	33	Vdc
Voltage Threshold /G13-G17	33	Vdc
Voltage Threshold /G19-G23	33	Vdc
Voltage Threshold/B1-B5	33	Vdc
Voltage Threshold /B7-B11	33	Vdc
Voltage Threshold /B13-B17	33	Vdc
CI DCVolt		

Contact input card type A allocated at Slot F requires one Voltage Threshold configuration for all the contact inputs. Contact input card type B allocated at Slot G has two groups of five contact inputs and therefore requires two Voltage Threshold settings. While Contact input card type C allocated at Slot B has three groups of five contact inputs, and therefore requires three Voltage Threshold settings.

Each Voltage Threshold setting is distinct by the slot or terminal numbers. For example: Voltage Threshold/Slot F specifies the threshold setting of all the contact inputs in Slot F with order code A; while Voltage Threshold/G13-G17 specifies the threshold setting for group of five contact inputs with terminals G13 to G17.

Upon start-up, the relay processor determines (from an assessment of the installed modules) which Contact Inputs are available, then displays settings for only these inputs.

VOLTAGE THRESHOLD /[X]

Range: 17, 33, 84, 166 VDC

Default: 17 VDC

The setting determines the minimum voltage required to detect a closed Contact Input. The value is selected according to the following criteria: 17 for 24 V sources, 33 for 48 V sources, 84 for 110 to 125 V sources and 166 for 250 V sources.

> *Note:*
> *For internal wetting set the Voltage Threshold to 17V.*

> *Note:*
> *When thresholds above 17V are selected, the internal +24V is disabled.*

Path: ***Setpoints*** > ***Inputs*** > ***Contact Inputs*** > ***Contact Input X***

NAME

Range: Up to 13 alphanumeric characters

Default: CI 1

An alphanumeric name may be assigned to a Contact Input for diagnostic, setting, and event recording purposes. The CI X ON (Logic 1) FlexLogic operand corresponds to Contact Input X being closed, while CI X OFF corresponds to Contact Input X being open.

DEBOUNCE TIME

Range: 0.0 to 16.0 ms in steps of 0.5 ms

Default: 10.0 ms

The Debounce Time defines the time required for the contact to overcome ‘contact bouncing’ conditions. As this time differs for different contact types and manufacturers, set it as a maximum contact debounce time (per manufacturer specifications) plus some margin to ensure proper operation.

EVENTS

Range: Enabled, Disabled

Default: Enabled

For example, to use Contact Input F1 as a status input from the breaker 52b contact, to seal-in the trip relay and record it in the Event Records menu, make the following settings changes:

CONTACT INPUT 1 NAME: `52b`

CONTACT INPUT 1 EVENTS: `Enabled`

> *Note:*
> *The 52b contact is closed when the breaker is open and open when the breaker is closed.*

8.2.2 VIRTUAL INPUTS

The relay is equipped with 64 Virtual Inputs that can be individually programmed to respond to input signals from the keypad or from communications protocols. This has the following advantages over Contact Inputs only:

- The number of logic inputs can be increased without introducing additional hardware.
- Logic functions can be invoked from a remote location over a single communication channel.
- The same logic function can be invoked both locally via contact input or front panel keypad, and/or remotely via communications.
- Panel switches can be replaced entirely by virtual switches to save cost and wiring.

All Virtual Input operands are defaulted to `Off` (logic 0) unless the appropriate input signal is received.

Path: ***Setpoints*** > ***Inputs*** > ***Virtual Inputs*** > ***Virtual Input***

FUNCTION

Range: Disabled, Enabled

Default: Disabled

If this setting is disabled, the input is OFF (logic 0) regardless of any attempt to alter the input. If enabled, the input operates as shown on the logic diagram below, and generates output FlexLogic operands in response to received input signals and the applied settings.

NAME

Range: Up to 13 Alphanumeric Characters

Default: VI 1

An alphanumeric name may be assigned to a Virtual Input for diagnostic, setting, and event recording purposes.

> *Note:*
> *Do not use special characters (e.g. <) as this could result in an error. Use only letters from the alphabet and numbers.*

TYPE

Range: Latched, Self-reset

Default: Latched

There are two types of operation: self-reset and latched. If VIRTUAL INPUT x TYPE is “Self-Reset,” when the input signal transits from OFF to ON the output operand will be set to ON for only one evaluation of the FlexLogic equations, then return to OFF. If set to “Latched,” the virtual input sets the state of the output operand to the same state as the most recent received input.

The self-reset operating mode generates the output operand for a single evaluation of the FlexLogic equations (i.e., a pulse of one protection pass). If the operand is to be used anywhere other than internally in a FlexLogic equation, it will likely have to be lengthened in time. A FlexLogic timer with a delayed reset time can perform this function.

EVENTS

Range: Enabled, Disabled

Default: Enabled

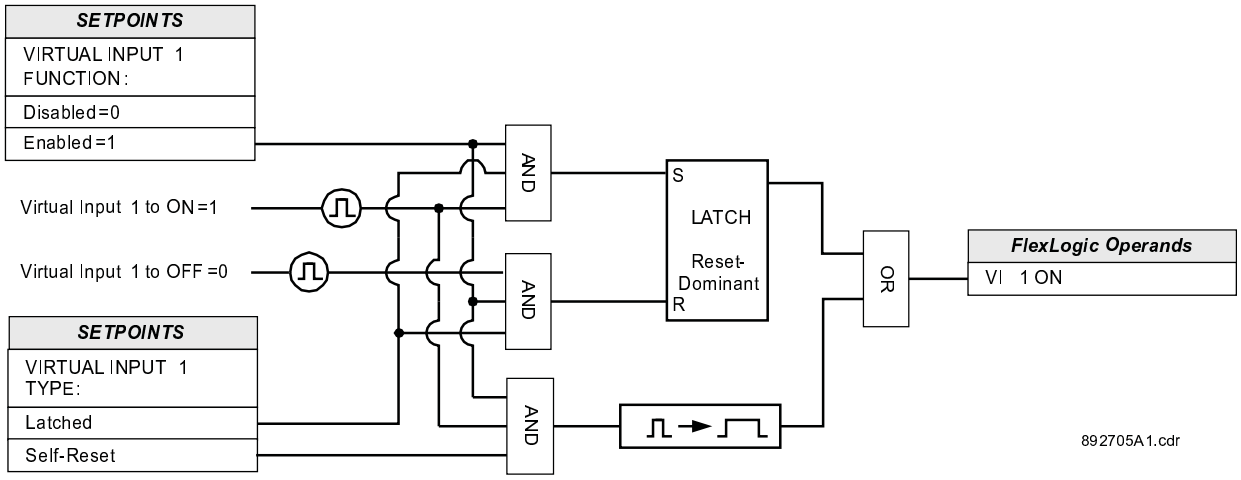

Figure 134: Virtual Inputs Scheme Logic

8.2.3 REMOTE INPUTS

Remote inputs provide a means of exchanging digital state information between Ethernet-networked devices supporting IEC 61850. Remote inputs that create FlexLogic operands at the receiving relay are extracted from GOOSE messages originating in remote devices.

Remote input 1 must be programmed to replicate the logic state of a specific signal from a specific remote device for local use. The programming is performed by the three settings shown in the *Virtual Inputs* section.

Path: ***Setpoints*** > ***Inputs*** > ***Remote Inputs***

NAME

Range: Up to 13 Alphanumeric Characters

Default: VI 1

An alphanumeric name may be assigned to a Remote Input for diagnostic, setting, and event recording purposes.

EVENTS

Range: Enabled, Disabled

Default: Enabled

This setting enables event generation whenever ***Remote Input Status*** is updated.

8.3 OUTPUTS

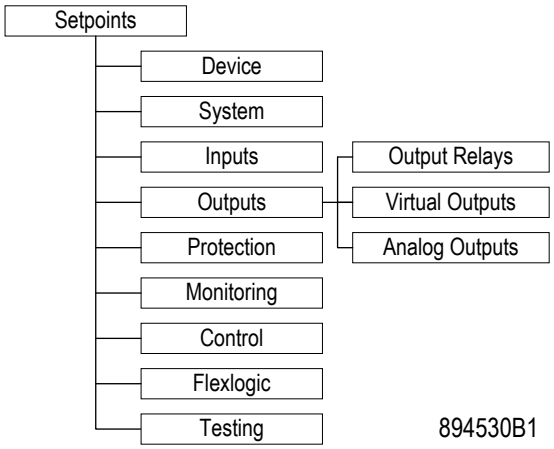

Figure 135: Outputs Display Hierarchy

8.3.1 OUTPUT RELAYS

> *Note:*
> *In this section the product itself is referred to as a "Device" rather than a relay, to prevent confusion with the term "output relay".*

The 8 Series devices are equipped with a number of electromechanical output relays or solid state output relays specified at the time of ordering. The exact configuration of the output relays depend on the model and the order code. For this reason, this description covers the 5 models of the 8 series and their possible configurations. The I/O modules for slot F provides 5 contact outputs for 5 output relays

Devices with one breaker

Output Relay 1 is a Form A relay, which can be used for Trip Coil monitoring and is used for tripping the breaker. The relay is energized upon operation of any element when the setpoint ***Function*** is set to `Trip`. The relay can be customized by changing the name, type, adding triggers, blocking. Output Relay 1 is configured internally for tripping the breaker, and it cannot be changed, disabled, or replaced by any other relay. Additional output relays can be selected to operate, and this can be done from the menu of each protection, control, or monitoring element.

Output Relay 2 is a Form A relay which can be used for *Close Coil monitoring*. It is selected by default for closing the breaker, but it it can be used for any other purposes for some models by configuring the setpoint ***Breaker/Close Relay Select***.

Devices with two breakers

Devices with two breakers are equipped with a number of Auxiliary Relays. The Auxiliary Relays can be energized by assigning a FlexLogic operand (trigger) under the setpoint ***Aux Rly # Operate.*** The Auxiliary Relays can be used for different applications. Any of these auxiliary output relays can be configured for either tripping or closing a breaker. For each of the breakers, you can select a pair of Auxiliary Relays for tripping and closing.

Depending on how an auxiliary relay is assigned, one of the following logic diagrams apply:

- If the auxiliary output relay is configured under the Breaker menu for breaker tripping, the operation of the output follows the *Trip* logic diagram.
- If the auxiliary output relay is configured under the Breaker menu for breaker closing, the operation of the output follows the *Close* logic diagram.
- If the auxiliary output is not configured for tripping or closing a breaker, the operation of the output follows the Auxiliary Relay Generic logic from logic diagram.

The *Trip* and *Close* auxiliary relays follow the respective *Trip* and *Close* logic, meaning they will have fixed operating characteristics as they depend on breaker feedback for resetting.

The auxiliary relays selected for breaker tripping are also available for selection from the menus of all protection elements. However, the auxiliary relays selected for breaker closing are excluded from the list for selection from the menu of all elements. Refer to the Breaker setup section on how to select an auxiliary relay for tripping and closing breakers.

Trip and Close output relay operation

The operation of the Trip and Close output relays is designed to be controlled by the 52a and 52b contacts.

If ***TYPE*** is set to `Dropoff`, the Trip and Close relay operation follows the logic outlined below:

- The Trip and Close relays reset after a breaker is detected in a state corresponding to the command. When a command is sent to one of these special relays, it remains operated until the requested change of the breaker state is confirmed and the initiating condition has reset.
- If the command resets without a change of the breaker state, the output relay is reset after a default interval of 2 seconds plus the Dropoff time.
- If neither of the breaker auxiliary contacts 52a nor 52b is assigned to a logic input, the Trip Relay resets after a default interval of 100 ms after the initiating input resets. The Close Relay is reset after 200 ms plus the Dropoff time.

If the selection is `Latched`, the relay is energized by any trip or open command and remains energized upon element dropout. Latched auxiliary outputs can be reset with a reset command.

If `Self-Reset` type is selected, the output relay is energized when the corresponding element operates and it stays energized until the element drops out.

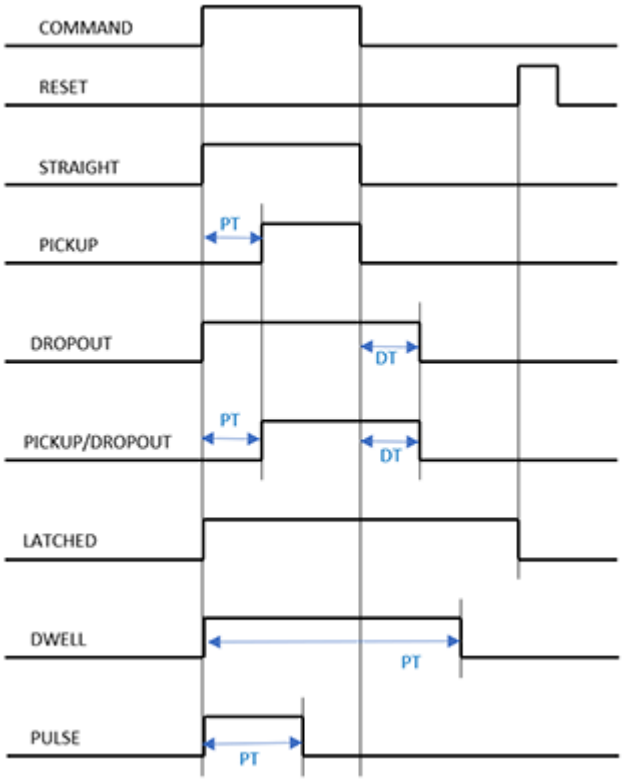

Figure 136: Switch timing of relay types

DWELL TIMER

When the input energizing quantity is true, the output is also activated at the same time instance. If the input energizing quantity stays activated for a time period shorter than the amount of time defined by the setpoint ***pickup value***, the output stays activated for the specified time, even if the input energizing quantity is activated again in between.

If the input energizing quantity stays activated for a time period longer than the predefined amount of the pickup value time, the output is deactivated when the input energizing quantity is deactivated.

The following tables summarize the operation

Setpoint 'Type'	Reset Operation	Setpoint 'Pickup Value'	Setpoint 'Dropoff Value'
Pickup	Self-Reset	Visible	Hidden
Dropoff	Self-Reset	Hidden	Visible
Pickup/Dropoff	Self-Reset	Visible	Visible
Self-Reset	Self-Reset	Hidden	Hidden
Latched	Latched, can reset only by Reset Command.	Hidden	Hidden
Pulsed	Pulsed	Visible	Hidden
Dwell	Dwell	Visible	Hidden

52a Contact Configured	52b Contact Configured	Relay Operation
Yes	Yes	Trip Relay and Close Relays continue operating until the breaker is detected open or closed using both 52a and 52b contacts as per breaker detection logic.
Yes	No	The Trip Relay continues operating until 52a indicates an open breaker. The Close Relay continues operating until 52a indicates a closed breaker.

52a Contact Configured	52b Contact Configured	Relay Operation
No	Yes	The Trip Relay continues operating until 52b indicates an open breaker. The Close Relay continues operating until 52b indicates a closed breaker.
No	No	The Trip Relay operates upon a trip command and stays “high” until the 100 ms default time expires. The Close Relay operates upon close command and resets after the 200 ms time expires.

8.3.1.1 OUTPUT RELAY AVAILABILITY

The output relays can be used for many different purposes such as opening and closing breakers, contactors, switches, control of primary equipment such as motor, transformer, generator, for blocking or supervision purposes, for interlocking, etc. To avoid using the same output relay for two totally different actions, the 8series relays checks the assignments of these output relays, and prevents their usage for some other actions. For this purpose, the output relays that have been already assigned for some action, are hidden from the menus of other elements.

For example, if output relay 1 has been assigned under Trip Relay Select setpoint to trip breaker 1, this output relay will be hidden from the list of outputs available to select in the menu for opening or closing a Switch, and vice versa. The table below defines the dependency of output relay availability based on the first come-first serve principal.

Place selected	Assigned/Non-assigned Output Relays	Available/Hidden
Output Relays in: ***Setpoints*** > ***Protection*** > ***Control*** > ***Monitoring Elements***	BKR [1-3] Trip Relay Select BKR [1-3] Close Relay Select SW [1-9] Open Relay Select SW [1-9] Close Relay Select Other Auxiliary Relays	Available Hidden Hidden Hidden Available
Output Relays in Control Elements with Restoration Ability	BKR [1-3] Trip Relay Select BKR [1-3] Close Relay Select SW [1-9] Close Relay Select SW [1-9] Open Relay Select Other Auxiliary Relays **NOTE**: The elements producing close commands are directly linked to their respective breakers for closing/restoring.	Hidden Hidden Hidden Hidden Available
Setpoints > ***System*** > ***Switch [X]*** > ***Open Relay Select***	BKR [1-3] Trip Relay Select BKR [1-3] Close Relay Select SW [1-9] Close Relay Select Other Auxiliary Relays	Hidden Hidden Hidden Available
Setpoints > ***System*** > ***Switch [X]*** > ***Close Relay Select***	BKR [1-3] Trip Relay Select BKR [1-3] Close Relay Select SW [1-9] Open Relay Select Other Auxiliary Relays	Hidden Hidden Hidden Available
Setpoints > ***System*** > ***Breaker [X]*** > ***Trip Relay Select***	BKR [1-3] Close Relay Select SW [1-9] Open Relay Select SW [1-9] Close Relay Select Other Auxiliary Relays	Hidden Hidden Hidden Available
Setpoints > ***System*** > ***Breaker [X]*** > ***Close Relay Select***	BKR [1-3] Trip Relay Select SW [1-9] Open Relay Select SW [1-9] Close Relay Select Other Auxiliary Relays	Hidden Hidden Hidden Available

8.3.1.2 CRITICAL FAILURE RELAY

The 8 Series relay is equipped with one output relay (# 8 - Critical Failure Relay) for failsafe indication. The Critical Failure Relay is a Form-C contact with one normally open (NO) and one normally closed (NC) contact. There are no user-programmable setpoints associated with this output relay.

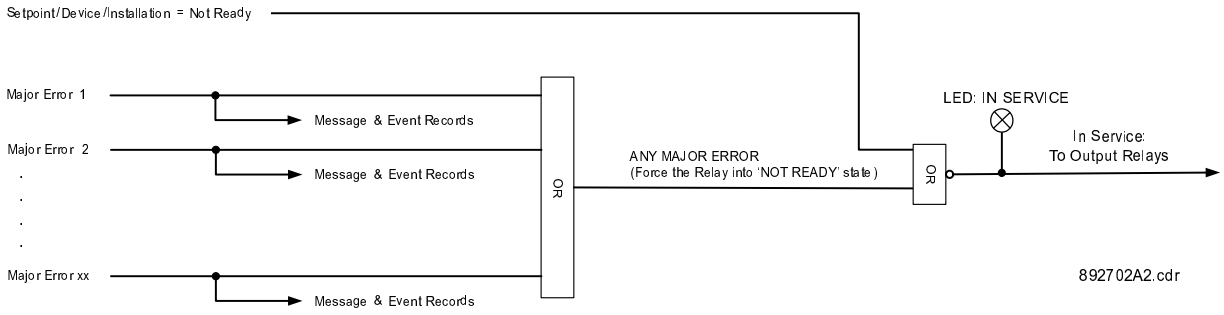

Note:
Please refer to the Self-Test Errors"section from the manual for details on the status of the output relays during Relay Not Ready state, or detection of Major Self-Test error.

MAINTAINING AN UNINTERRUPTED PROCESS

The Output Relays are operational (can be closed/opened) while the is In-Service. If the relay goes into "Out-of-Service" mode, the status of all previously energized output relays changes to de-energized. If an output relay was used to maintain a running process, or to hold a motor contactor while energized, the process or the motor contactor will be interrupted. To keep the process uninterrupted, the following connection scheme can be applied:

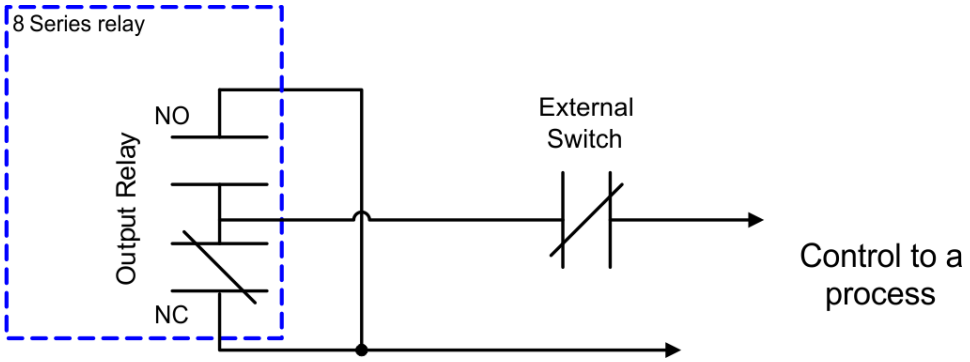

Figure 137: Maintaining an uninterrupted process upon a relay Major Error

If the output relay is energized during the In-Service relay condition, the NO contact will be closed, and the NC contact will be open. The process is running. If the relay goes into "Out-of-Service" mode, the output relay will be de-energized, and the process will still be running, as the NC contact will be closed. An external switch, or stop pushbutton must be installed in series to the relay output contacts, so that one can stop the process if needed.

8.3.1.3 RELAY SELECTED FOR BREAKER TRIP

When any Auxiliary Relay is selected under ***Setpoints > System > Breakers (Contactor) > Breakers 1 (Contactor 1) > Trip Relay Select***, the Trip Relay logic is applied to energize the selected Relay. If the selected value of Trip Relay Select is `Off`, the output relay functions as an Auxiliary relay. The description below applies to the Relay 1 Trip functionality

NAME

Range: Up to 13 alphanumeric characters

Default: Trip

The setpoint is used to name the Trip relay by selecting up to 13 alphanumeric characters.

Note:
If Aux Relay 1 is selected for Breaker Trip or Contactor Trip, the relay name from the Output Relays menu changes to “Trip”. If Aux Relay 1 is not selected, the name reverts to “Aux Relay 1".

BLOCK

Range: Disabled, Any FlexLogic operand

Default: Disabled

This setting defines a Block to the Trip output relay. When the selected input is asserted, the Trip output relay is blocked.

OPERATE

Range: Off, On, Any FlexLogic operand

Default: Off

This setpoint provides a selection of any operand from the list of FlexLogic or communications, which can be used to energize the Trip output relay.

When set to On, the output relay is constantly asserted (On=1).

When set to Off and no FlexLogic operand is selected, the output relay operates as set in individual protection elements.

Note:
Setting OPERATE to On supersedes individual protection function settings.

PICKUP VALUE

Range: 0 to 14400000 in steps of 1 ms

Default: 0 ms

This setting is used to set the time/time delay for Pickup, Dwell, Pulse, Pickup/Dropoff.

DROPOFF VALUE

Range: 0 to 14400000 in steps of 1 ms

Default: 0 ms

This setting is used to set the drop-off time delay for Dropoff, Pickup/Dropoff.

BLOCK

Range: Disabled, Any FlexLogic operand

Default: Disabled

This setting defines a Block to the Trip output relay. When the selected input is asserted, the Trip output relay is blocked.

OPERATE

Range: Off, Any FlexLogic operand

Default: Off

This setpoint provides a selection of any operand from the list of FlexLogic or communications, which can be used to energize the Trip output relay.

TYPE

Range: Pickup, Dropoff, Dwell, Pulse, Pickup/Dropoff, Self-Reset, Latched

Default: Self-Reset

If Self-Reset type is selected, the output relay is energized as long as the element is in operating mode and resets when the element drops out. If Latched type is selected, the output relay stays energized upon element dropout. The latched auxiliary outputs can be reset by issuing a reset command. More detail is provided in description of the Output Relays

OPERATION

Range: Non-Failsafe, Failsafe

Default: Failsafe

Failsafe operation causes the output relay to be energized when the Trip condition signal is low and de-energized when the same signal is high. A failsafe relay also changes state (if not already activated by an operand driving this output relay) when control power is removed from the 859. Conversely a non-failsafe relay is de-energized in its normal non-activated state and will not change state when control power is removed from the relay (if not already activated by a protection element).

The default value depends on the selection made in: Setpoints > System > Motor > Setup > Switching Device Type. If the Switching Device Type is “Breaker”, the Operation default is “Non-Failsafe”. If the Switching Device Type is “Contactor”, the Operation default is “Failsafe”.

Note:
Changing the default setting will result in losing the basic functionality of the output relay.

Caution:
A failsafe relay changes state when control power is removed from the relay. When Switching Device Type is “Contactor”, output relay in failsafe mode can result into tripping of the motor when relay power is removed.

EVENTS

Range: Disabled, Enabled

Default: Enabled

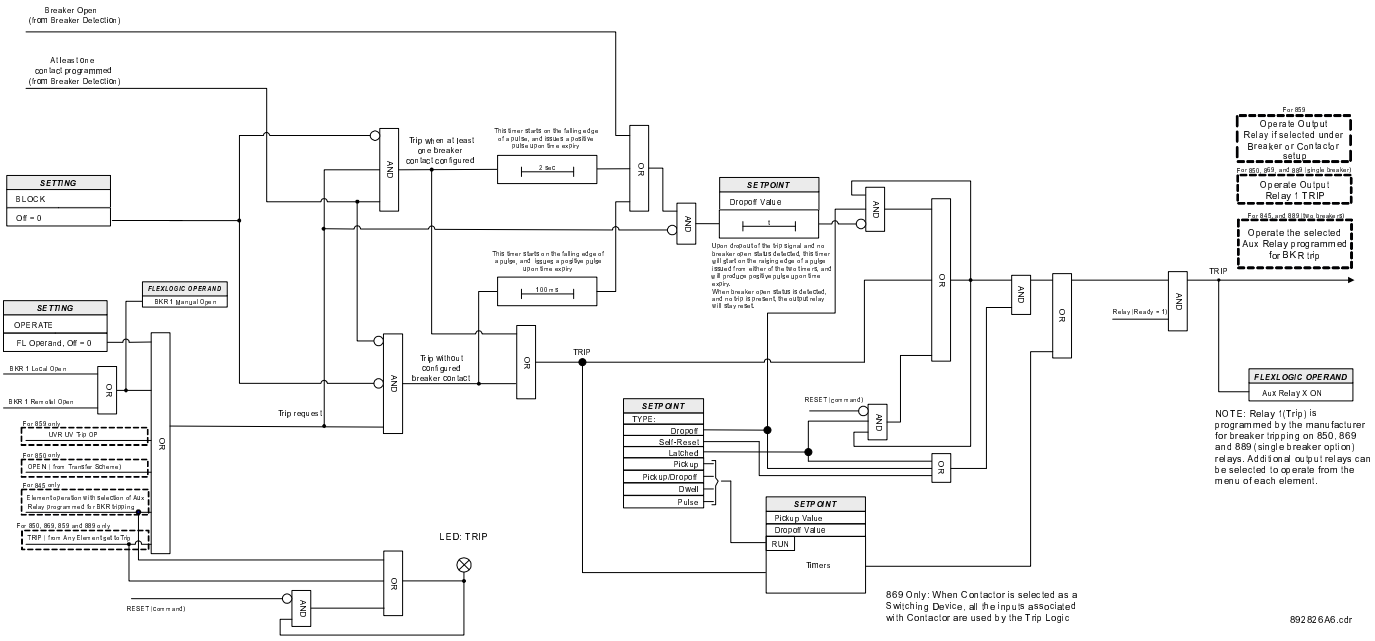

Figure 138: Relay 1 “TRIP” Selected for Breaker 1 logic diagram

8.3.1.4 RELAY SELECTED FOR BREAKER CLOSE

Output Relay 2 (F4) is labeled CLOSE/AUX on the wiring diagram. As suggested by that name, it can be used as a Close relay or an Auxiliary relay. This selection is made at Setpoints > System > Breakers (Contactor) > Breakers 1 (Contactor 1) > Close Relay Select. If the selected value of the CLOSE RELAY SELECTsetting is Off, Output Relay 2 functions as an Auxiliary relay. If the selected value is Relay 2, Output Relay 2 functions as a Close relay. The default value is Off. The description below applies to both Relay 2 “Close” functionality.

Path:Setpoints > Outputs > Output Relays > Aux Relay 2 (Close)

> *Note:*
> *The output relays selected under the Breaker menu for breaker closing are excluded from the list of outputs for selection under the menus of all elements providing such output relay selection.*

> *Note:*
> *For relays with a single breaker, if Aux Relay 2 is selected for Breaker Close, the relay name from the Output Relays menu changes to “Close”. If Aux Relay 2 is not selected, the name reverts to “Aux Relay 2”.*

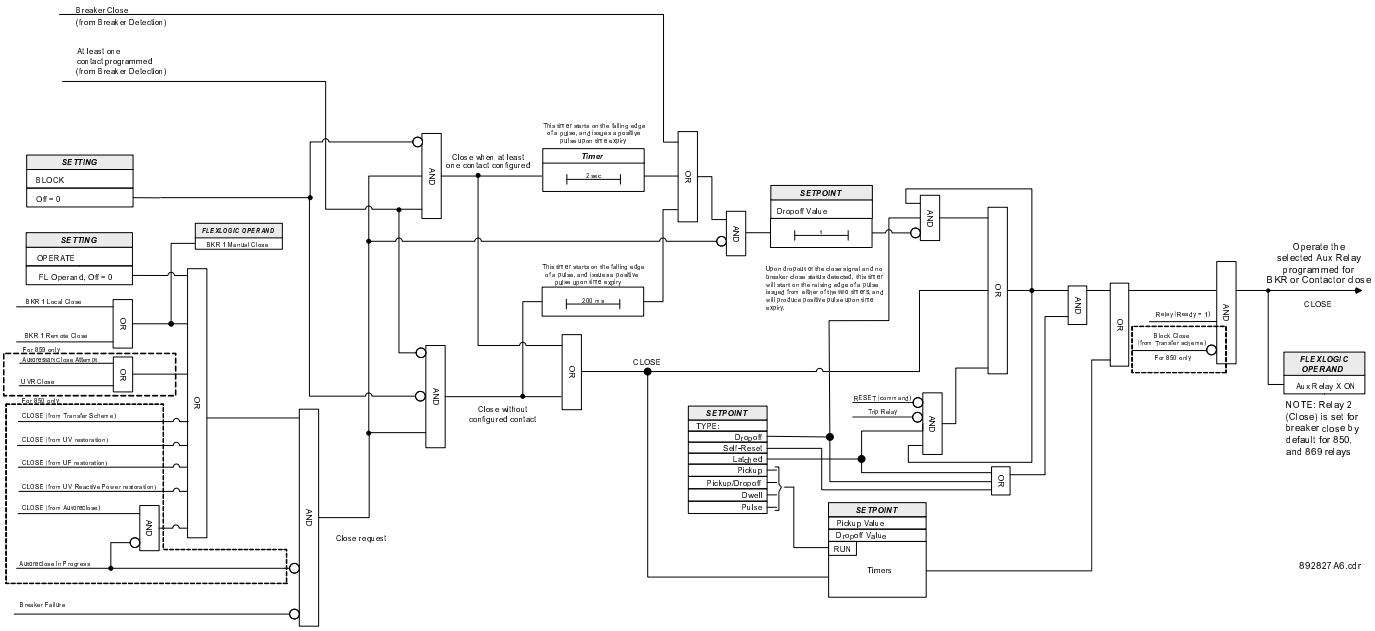

Figure 139: Close" Selected for Breaker 1 logic diagram

8.3.2 VIRTUAL OUTPUTS

The relay is equipped with 96 virtual outputs that may be assigned for use via FlexLogic. Virtual outputs not assigned for use are set to `OFF` (Logic 0).

A name can be assigned to each virtual output. Any change of state to a virtual output can be logged as an event if programmed to do so. Virtual outputs are resolved in each protection pass via the evaluation of FlexLogic equations.

For example, if Virtual Output 1 is the trip signal from FlexLogic and the trip relay is used to signal events, the settings would be programmed as follows:

VIRTUAL OUTPUT 1 NAME: *Trip*

VIRTUAL OUTPUT 1 EVENTS: *Enabled*

Path: ***Setpoints*** > ***Outputs*** > ***Virtual Outputs*** > ***Virtual Outputs 1 (32)***

NAME

Range: up to 13 alphanumeric characters

Default: VO 1

An alphanumeric name may be assigned to a virtual output for diagnostic, setting, and event recording purposes.

> *Note:*
> *Do not use special characters (e.g. <) as this could result in an error. Use only letters from the alphabet and numbers.*

EVENTS

Range: Disabled, Enabled

Default: Disabled

8.3.3 ANALOG OUTPUTS

Depending on the order code, the relay supports one optional DC analog card. The Analog card has 4 analog inputs and 7 analog outputs.There are three Analog Output channel scenarios for analog minimum and maximum output range shown in the figure below. Type A characteristics apply when the minimum range is 0 and the maximum range is a positive (+ve) value. Type B characteristics apply when the minimum and maximum ranges are definitely positive (+ve) values. Type C characteristics apply when the minimum range is a negative (-ve) and the maximum range is a positive (+ve) value. The following diagram illustrates these characteristics.

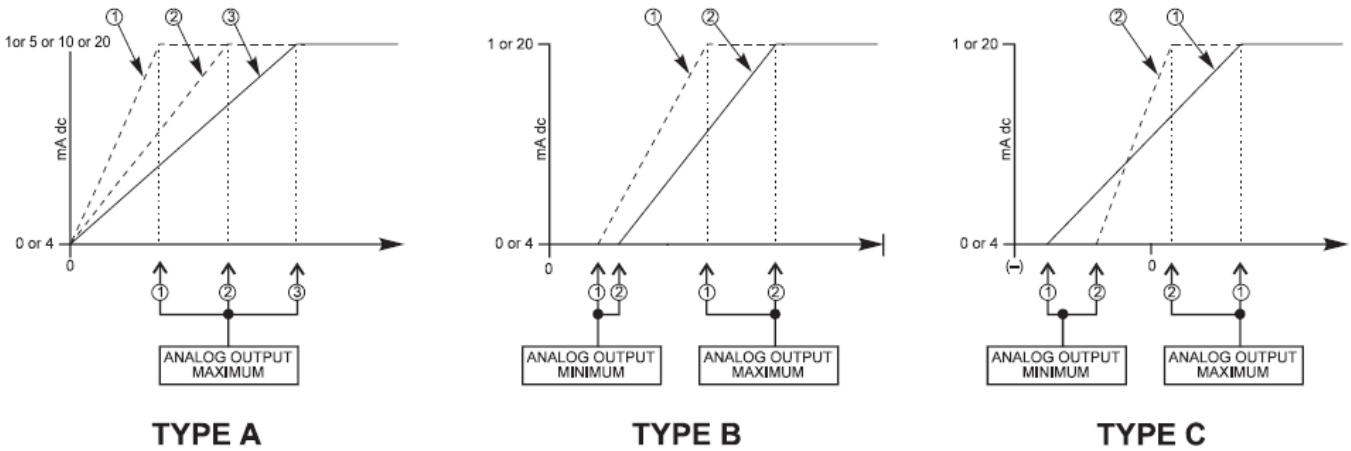

Figure 140: Analog Outputs Channel Characteristics

Path: ***Setpoints*** > ***Outputs*** > ***Analog Outputs*** > ***Analog Output 1(X)***

FUNCTION

Range: Disabled, Enabled

Default: Disabled

RANGE

Range: 0 to 1 mA, 0 to 5 mA, 0 to 10 mA, 0 to 20 mA, or 4 to 20 mA

Default: 0 to 1 mA

This setting provides the selection for the analog output range.

PARAMETER

Range: Off, any Flex Analog Parameter

Default: Off

This setting selects the measured parameter to control the Analog Output level.

MIN VALUE

Range: Populates per selection of the analog parameter

Default: 0

This setting defines the minimum value of the analog output quantity. It populates based on the selection of the analog parameter.

MAX VALUE

Range: Populates per selection of the analog parameter

Default: 0

This setting defines the maximum value of the analog output quantity. It populates based on the selection of the analog parameter.

Each channel can be programmed to represent a FlexAnalog parameter available in the respective relay. The range and steps is the same as the range of the FlexAnalog.

PF SCALING TYPE

Range: Flat, Step

Default: Flat

The measured Power Factor values can be transferred to any of the available analogue outputs. There are two options for scaling power factor: Flat and Step.

> *Note:*
> *This setting is only available when Analog Output is selected as Power Factor.*

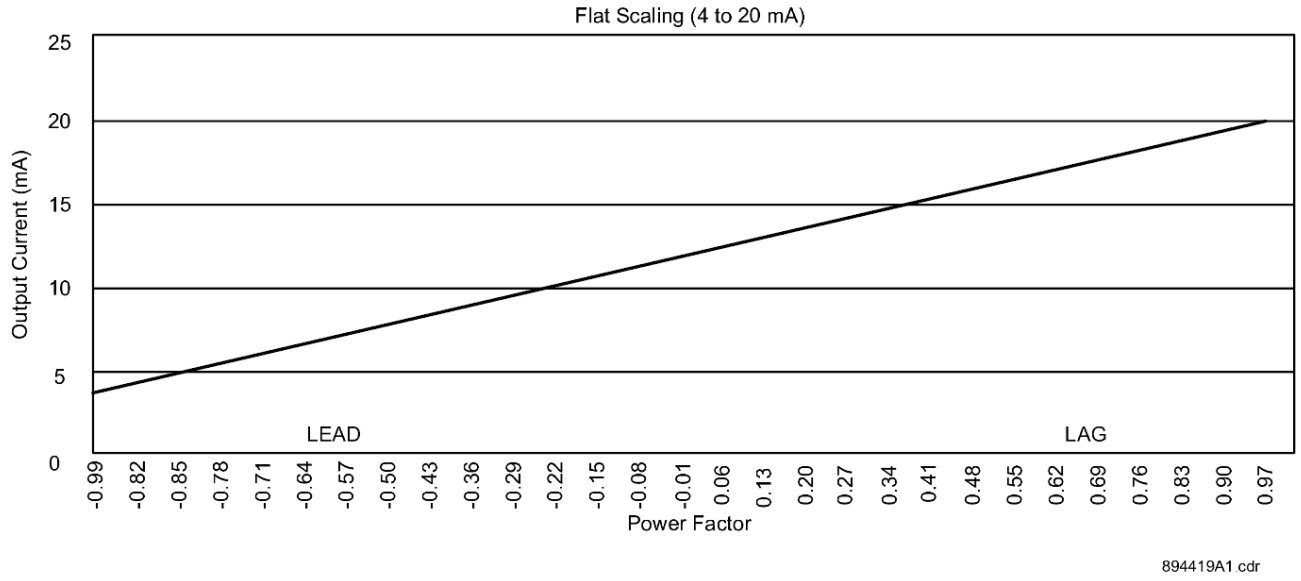

Figure 141: Flat Scaling

Flat scaling is a simple ascending linear function. It covers all selected ranges. The above figure shows the graph for the 4 to 20 mA output range in Flat Scaling. It covers the entire selected power factor range from the minimum (-0.99) to the maximum setting (+1.00).

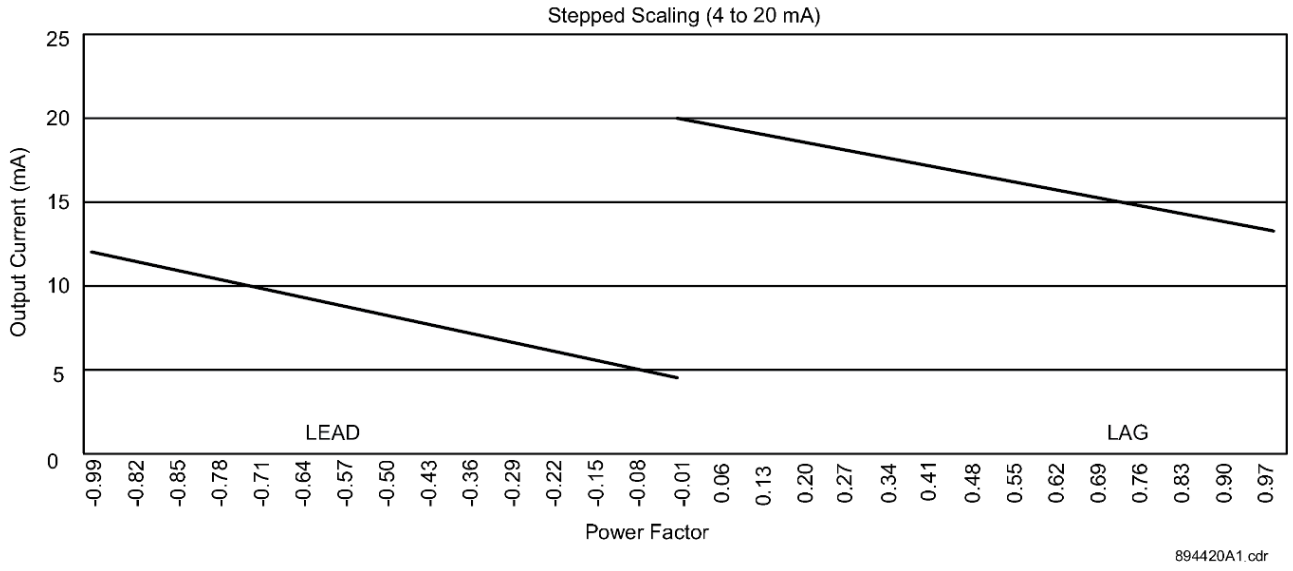

Figure 142: Step Scaling

Step scaling is a discontinuous descending linear function with one step-up point. The figure above shows the related graph for the 4 to 20 mA output range in Step Scaling. It covers all the entire selected power factor range from the minimum (-0.01) to the maximum setting (+0.00).

CHAPTER 9

PROTECTION

9.1 CHAPTER OVERVIEW

This chapter contains the following sections:

Chapter Overview 293
Protection 294

9.2 PROTECTION

The protection elements are organized in six (6) identical setpoint groups: Setpoint Group 1 to Setpoint Group 6.

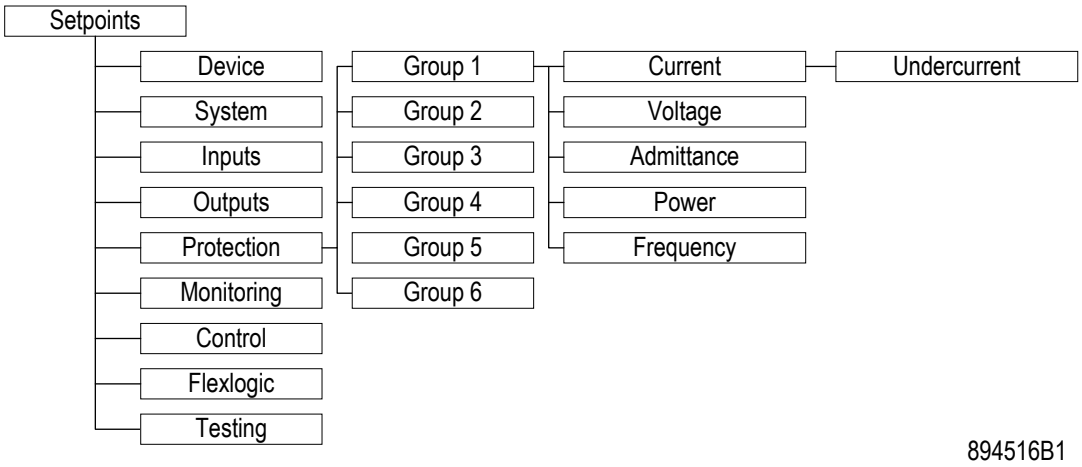

Figure 143: Protection Display Hierarchy

Each Setpoint Group has the same protection functions, depending on the relay order code.

9.2.1 CURRENT ELEMENTS OVERVIEW

The 850 feeder protection relay provides the following current protection elements:

- Phase time overcurrent (Phase TOC)
- Phase instantaneous overcurrent (Phase IOC)
- Phase directional overcurrent (Phase Directional OC)
- Neutral time overcurrent (Neutral TOC)
- Neutral instantaneous overcurrent (Neutral IOC)
- Neutral directional overcurrent (Neutral Directional OC)
- Ground time overcurrent (Ground TOC)
- Ground instantaneous overcurrent (Ground IOC)
- Ground directional overcurrent (Ground Directional OC)
- Sensitive ground time overcurrent (Sensitive Ground TOC)
- Sensitive ground instantaneous overcurrent (Sensitive Ground IOC)
- Sensitive ground directional overcurrent (Sens. Ground Directional OC)
- Restricted Ground Fault
- Switch On To Fault
- Negative sequence time oververcurrent (Negative Sequence TOC)
- Negative sequence instantaneous overcurrent (Negative Sequence IOC)
- Negative sequence directional overcurrent (Negative Sequence Dir. OC)
- Broken Conductor
- Load Encroachment
- Undercurrent
- Thermal Overload

The relay has six setpoint groups with several protection elements repeated in each group. (Available protection elements depend on the 850 model: 850D, 850E, and on the exact relay order code). The programming of the time-current characteristics of these elements is identical in all cases and is only covered in this section. The required curve is established by programming a Pickup Current, Curve Shape, Curve Multiplier, and Reset Time. The Curve Shape can be either a standard shape or a user-defined shape programmed with the FlexCurve feature. Accurate coordination may require changing the time overcurrent characteristics of particular elements under different conditions. For manual closing or picking up a cold load, a different time-current characteristic can be produced by increasing the pickup current value. In the 850 relay, the pickup current can be raised between autoreclose shots.

9.2.1.1 INVERSE TIME OVERCURRENT CURVES

The Inverse Time Overcurrent Curves used by the Time Overcurrent elements are the IEEE, IEC, GE Type IAC, ANSI, I^2t and I^4t standard curve shapes. This allows for simplified coordination with downstream devices.

If none of these curve shapes are adequate, FlexCurves may be used to customize the inverse time curve characteristics. The definite time curve is also an option that may be appropriate if only simple protection is required.

OVERCURRENT CURVE TYPES

IEEE	ANSI	IEC	GE TYPE IAC	OTHER
IEEE Extremely Inverse	ANSI Extremely Inverse	IEC Standard Inverse	IAC Extremely Inverse	I2t
IEEE Very Inverse	ANSI Very Inverse	IEC Very Inverse	IAC Very Inverse	I4t
IEEE Moderately Inverse	ANSI Normally Inverse	IEC Extremely Inverse	IAC Inverse	FlexCurves™ A, B, C and D
US Inverse	ANSI Moderately Inverse	UK Long Time Inverse	IAC Short Inverse	Recloser Curve
US Short Time Inverse		Rectifier		Definite Time
		FR Short Time Inverse		RI
		Standard Inverse (1.3s)		
		BPN EDF		

A time dial multiplier setting allows the selection of a multiple of the base curve shape (where the time dial multiplier = 1) with the curve shape setting. Unlike the electromechanical time dial equivalent, operate times are directly proportional to the time multiplier (***TD MULTIPLIER***) setting value. For example, all times for a multiplier of 10 are 10 times the multiplier 1 or base curve values. Setting the multiplier to zero results in an instantaneous response to all current levels above Pickup.

Time Overcurrent time calculations are made with an internal *energy capacity* memory variable. When this variable indicates that the energy capacity has reached 100%, a Time Overcurrent element will operate. If less than 100% energy capacity is accumulated in this variable and the current falls below the dropout threshold of 97 to 98% of the Pickup value, the variable must be reduced.

Two types of this resetting operation are available: `DT` and `Inverse`. The `Inverse` selection can be used where the relay must coordinate with electromechanical relays. The `DT` selection is intended for applications with other relays, such as most static relays, which set the energy capacity directly to zero or some fixed time delay when the current falls below the reset threshold or when inverse curve coordination is not available.

> *Note:*
> *In IEEE, ANSI, IAC, I2T, I4T User Curves, multiplier setting TDM value is provided by the* ***Time Dial s****etting*

IEEE CURVES

The IEEE Time Overcurrent curve shapes conform to industry standards and the IEEE C37.112-1996 curve classifications for extremely, very, and moderately inverse. The IEEE curves are derived from the formula:

$$T = TDM \times \left[\frac{A}{\left(I / I_{pickup}\right)^{p} - 1} + B \right], \quad T_{RESET} = TDM \times \left[\frac{t_r}{1 - \left(I / I_{pickup}\right)^{2}} \right]$$

Where:

- T = operate time (in seconds)
- TDM = Multiplier setting
- I = input current
- I_{pickup} = Pickup Current setting
- A, B, p = constants
- T_{RESET} = reset time in seconds (assuming energy capacity is 100% and RESET is `Timed`)
- t_r = characteristic constant

IEEE INVERSE TIME CURVE CONSTANTS

IEEE CURVE SHAPE	A	B	P	tr
IEEE Extremely Inverse	28.2	0.1217	2.000	29.1
IEEE Very Inverse	19.61	0.491	2.000	21.6
IEEE Moderately Inverse	0.0515	0.1140	0.02000	4.85
US Inverse	5.95	0.180	2.000	5.95
US Short Time Inverse	0.16758	0.11858	0.02000	2.261

IEEE CURVE TRIP TIMES (IN SECONDS)

TDM	CURRENT (I/I_{pickup})									
	1.5	2.0	3.0	4.0	5.0	6.0	7.0	8.0	9.0	10.0
IEEE EXTREMELY INVERSE										
0.5	11.341	4.761	1.823	1.001	0.648	0.464	0.355	0.285	0.237	0.203
1.0	22.682	9.522	3.647	2.002	1.297	0.927	0.709	0.569	0.474	0.407
2.0	45.363	19.043	7.293	4.003	2.593	1.855	1.418	1.139	0.948	0.813
4.0	90.727	38.087	14.587	8.007	5.187	3.710	2.837	2.277	1.897	1.626
6.0	136.090	57.130	21.880	12.010	7.780	5.564	4.255	3.416	2.845	2.439
8.0	181.454	76.174	29.174	16.014	10.374	7.419	5.674	4.555	3.794	3.252
10.0	226.817	95.217	36.467	20.017	12.967	9.274	7.092	5.693	4.742	4.065
IEEE VERY INVERSE										
0.5	8.090	3.514	1.471	0.899	0.654	0.526	0.450	0.401	0.368	0.345
1.0	16.179	7.028	2.942	1.798	1.308	1.051	0.900	0.802	0.736	0.689
2.0	32.358	14.055	5.885	3.597	2.616	2.103	1.799	1.605	1.472	1.378
4.0	64.716	28.111	11.769	7.193	5.232	4.205	3.598	3.209	2.945	2.756
6.0	97.074	42.166	17.654	10.790	7.849	6.308	5.397	4.814	4.417	4.134
8.0	129.432	56.221	23.538	14.387	10.465	8.410	7.196	6.418	5.889	5.513
10.0	161.790	70.277	29.423	17.983	13.081	10.513	8.995	8.023	7.361	6.891
IEEE MODERATELY INVERSE										
0.5	3.220	1.902	1.216	0.973	0.844	0.763	0.706	0.663	0.630	0.603
1.0	6.439	3.803	2.432	1.946	1.688	1.526	1.412	1.327	1.260	1.207

TDM	CURRENT (I/I_{pickup})									
	1.5	2.0	3.0	4.0	5.0	6.0	7.0	8.0	9.0	10.0
2.0	12.878	7.606	4.864	3.892	3.377	3.051	2.823	2.653	2.521	2.414
4.0	25.756	15.213	9.729	7.783	6.753	6.102	5.647	5.307	5.041	4.827
6.0	38.634	22.819	14.593	11.675	10.130	9.153	8.470	7.960	7.562	7.241
8.0	51.512	30.426	19.458	15.567	13.507	12.204	11.294	10.614	10.083	9.654
10.0	64.390	38.032	24.322	19.458	16.883	15.255	14.117	13.267	12.604	12.068
US Inverse										
0.5	2.470	1.082	0.462	0.288	0.214	0.175	0.152	0.137	0.127	0.120
1.0	4.940	2.163	0.924	0.577	0.428	0.350	0.304	0.274	0.254	0.240
2.0	9.880	4.327	1.848	1.153	0.856	0.700	0.608	0.549	0.509	0.480
4.0	19.760	8.653	3.695	2.307	1.712	1.400	1.216	1.098	1.018	0.960
6.0	29.640	12.980	5.543	3.460	2.568	2.100	1.824	1.647	1.526	1.441
8.0	39.520	17.307	7.390	4.613	3.423	2.800	2.432	2.196	2.035	1.921
10.0	49.400	21.633	9.238	5.767	4.279	3.500	3.040	2.744	2.544	2.401
US Short Time Inverse										
0.5	10.350	6.062	3.831	3.040	2.621	2.356	2.171	2.032	1.924	1.837
1.0	20.700	12.123	7.662	6.079	5.241	4.712	4.341	4.065	3.849	3.674
2.0	41.400	24.247	15.324	12.159	10.483	9.423	8.683	8.130	7.698	7.349
4.0	82.800	48.493	30.648	24.317	20.966	18.847	17.365	16.259	15.395	14.698
6.0	124.200	72.740	45.972	36.476	31.448	28.270	26.048	24.389	23.093	22.046
8.0	165.600	96.987	61.296	48.635	41.931	37.694	34.730	32.519	30.791	29.395
10.0	207.001	121.233	76.620	60.793	52.414	47.117	43.413	40.648	38.489	36.744

ANSI CURVES

The ANSI time overcurrent curve shapes conform to industry standards and the ANSI C37.90 curve classifications for extremely, very, and moderately inverse. The ANSI curves are derived from the following formulae:

$$T = TDM \times \left[A + \frac{B}{(I/I_{pickup}) - C} + \frac{D}{((I/I_{pickup}) - C)^2} + \frac{E}{((I/I_{pickup}) - C)^3} \right], \quad T_{RESET} = TDM \times \left[\frac{t_r}{1 - (I/I_{pickup})^2} \right]$$

Where:

- T = operate time (in seconds)
- TDM = Multiplier setting
- I = input current
- I_{pickup} = Pickup Current setting
- A to E = constants
- T_{RESET} = reset time in seconds (assuming energy capacity is 100% and RESET is `Timed`)
- t_r = characteristic constant

ANSI INVERSE TIME CURVE CONSTANTS

ANSI CURVE SHAPE	A	B	C	D	E	t_r
ANSI Extremely Inverse	0.0399	0.2294	0.5000	3.0094	0.7222	5.67
ANSI Very Inverse	0.0615	0.7989	0.3400	-0.2840	4.0505	3.88
ANSI Normally Inverse	0.0274	2.2614	0.3000	-4.1899	9.1272	5.95
ANSI Moderately Inverse	0.1735	0.6791	0.8000	-0.0800	0.1271	1.08

ANSI CURVE TRIP TIMES (IN SECONDS)

TDM	CURRENT (I/Ipickup)									
	1.5	2.0	3.0	4.0	5.0	6.0	7.0	8.0	9.0	10.0
ANSI EXTREMELY INVERSE										
0.5	2.000	0.872	0.330	0.184	0.124	0.093	0.075	0.063	0.055	0.049
1.0	4.001	1.744	0.659	0.368	0.247	0.185	0.149	0.126	0.110	0.098
2.0	8.002	3.489	1.319	0.736	0.495	0.371	0.298	0.251	0.219	0.196
4.0	16.004	6.977	2.638	1.472	0.990	0.742	0.596	0.503	0.439	0.393
6.0	24.005	10.466	3.956	2.208	1.484	1.113	0.894	0.754	0.658	0.589
8.0	32.007	13.955	5.275	2.944	1.979	1.483	1.192	1.006	0.878	0.786
10.0	40.009	17.443	6.594	3.680	2.474	1.854	1.491	1.257	1.097	0.982
ANSI VERY INVERSE										
0.5	1.567	0.663	0.268	0.171	0.130	0.108	0.094	0.085	0.078	0.073
1.0	3.134	1.325	0.537	0.341	0.260	0.216	0.189	0.170	0.156	0.146
2.0	6.268	2.650	1.074	0.682	0.520	0.432	0.378	0.340	0.312	0.291
4.0	12.537	5.301	2.148	1.365	1.040	0.864	0.755	0.680	0.625	0.583
6.0	18.805	7.951	3.221	2.047	1.559	1.297	1.133	1.020	0.937	0.874
8.0	25.073	10.602	4.295	2.730	2.079	1.729	1.510	1.360	1.250	1.165
10.0	31.341	13.252	5.369	3.412	2.599	2.161	1.888	1.700	1.562	1.457
ANSI NORMALLY INVERSE										
0.5	2.142	0.883	0.377	0.256	0.203	0.172	0.151	0.135	0.123	0.113
1.0	4.284	1.766	0.754	0.513	0.407	0.344	0.302	0.270	0.246	0.226
2.0	8.568	3.531	1.508	1.025	0.814	0.689	0.604	0.541	0.492	0.452
4.0	17.137	7.062	3.016	2.051	1.627	1.378	1.208	1.082	0.983	0.904
6.0	25.705	10.594	4.524	3.076	2.441	2.067	1.812	1.622	1.475	1.356
8.0	34.274	14.125	6.031	4.102	3.254	2.756	2.415	2.163	1.967	1.808
10.0	42.842	17.656	7.539	5.127	4.068	3.445	3.019	2.704	2.458	2.260
ANSI MODERATELY INVERSE										
0.5	0.675	0.379	0.239	0.191	0.166	0.151	0.141	0.133	0.128	0.123
1.0	1.351	0.757	0.478	0.382	0.332	0.302	0.281	0.267	0.255	0.247
2.0	2.702	1.515	0.955	0.764	0.665	0.604	0.563	0.533	0.511	0.493
4.0	5.404	3.030	1.910	1.527	1.329	1.208	1.126	1.066	1.021	0.986
6.0	8.106	4.544	2.866	2.291	1.994	1.812	1.689	1.600	1.532	1.479

TDM	CURRENT (I/Ipickup)									
	1.5	2.0	3.0	4.0	5.0	6.0	7.0	8.0	9.0	10.0
8.0	10.807	6.059	3.821	3.054	2.659	2.416	2.252	2.133	2.043	1.972
10.0	13.509	7.574	4.776	3.818	3.324	3.020	2.815	2.666	2.554	2.465

IEC CURVES

For European applications, the relay offers three standard curves defined in IEC 255-4 and British standard BS142. These are defined as IEC Curve A, IEC Curve B, and IEC Curve C. The formula for these curves is:

$$T = TDM \times \left[\frac{K}{\left(I / I_{pickup}\right)^{E} - 1} \right], \quad T_{RESET} = TDM \times \left[\frac{t_r}{1 - \left(I / I_{pickup}\right)^{2}} \right]$$

BPN EDF Curve Operate Equation

$$T = TDM \times \left[\frac{K}{\left({}^{I}/_{I_{pickup}} \right)^{E} - 1} + L \right]$$

Where:

- T = operate time (in seconds)
- TDM = Multiplier setting
- I = input current
- I_{pickup} = Pickup Current setting
- K, E = constants
- t_r = characteristic constant
- T_{RESET} = reset time in seconds (assuming energy capacity is 100% and RESET is `Timed`)

IEC (BS) INVERSE TIME CURVE CONSTANTS

IEC (BS) CURVE SHAPE	K	E	tr
IEC Curve A (BS142)	0.140	0.020	9.7
IEC Curve A (BS142)	13.500	1.000	43.2
IEC Curve A (BS142)	80.000	2.000	58.2
IEC Short Inverse	0.050	0.040	0.500
Long Time Inverse	120	1	-
Rectifier	45900	5.6	-
Standard Inverse (1.3s)	0.0607	0.02	3.55

IEC (BS) CURVE SHAPE	K	E	L
BPN EDF	1000	2	0.655

Note:
When using Long Time Inverse, Rectifier, IEC Short Time Inverse, BPN EDF curves for the operate characteristic, DT (Definite Time) is always used for the Reset characteristic

IEC CURVE TRIP TIMES (IN SECONDS)

TDM	CURRENT (I/I_{pickup})									
	1.5	2.0	3.0	4.0	5.0	6.0	7.0	8.0	9.0	10.0
IEC CURVE A										
0.05	0.860	0.501	0.315	0.249	0.214	0.192	0.176	0.165	0.156	0.149
0.10	1.719	1.003	0.630	0.498	0.428	0.384	0.353	0.330	0.312	0.297
0.20	3.439	2.006	1.260	0.996	0.856	0.767	0.706	0.659	0.623	0.594
0.40	6.878	4.012	2.521	1.992	1.712	1.535	1.411	1.319	1.247	1.188
0.60	10.317	6.017	3.781	2.988	2.568	2.302	2.117	1.978	1.870	1.782
0.80	13.755	8.023	5.042	3.984	3.424	3.070	2.822	2.637	2.493	2.376
1.00	17.194	10.029	6.302	4.980	4.280	3.837	3.528	3.297	3.116	2.971
IEC CURVE B										
0.05	1.350	0.675	0.338	0.225	0.169	0.135	0.113	0.096	0.084	0.075
0.10	2.700	1.350	0.675	0.450	0.338	0.270	0.225	0.193	0.169	0.150
0.20	5.400	2.700	1.350	0.900	0.675	0.540	0.450	0.386	0.338	0.300
0.40	10.800	5.400	2.700	1.800	1.350	1.080	0.900	0.771	0.675	0.600
0.60	16.200	8.100	4.050	2.700	2.025	1.620	1.350	1.157	1.013	0.900
0.80	21.600	10.800	5.400	3.600	2.700	2.160	1.800	1.543	1.350	1.200
1.00	27.000	13.500	6.750	4.500	3.375	2.700	2.250	1.929	1.688	1.500
IEC CURVE C										
0.05	3.200	1.333	0.500	0.267	0.167	0.114	0.083	0.063	0.050	0.040
0.10	6.400	2.667	1.000	0.533	0.333	0.229	0.167	0.127	0.100	0.081
0.20	12.800	5.333	2.000	1.067	0.667	0.457	0.333	0.254	0.200	0.162
0.40	25.600	10.667	4.000	2.133	1.333	0.914	0.667	0.508	0.400	0.323
0.60	38.400	16.000	6.000	3.200	2.000	1.371	1.000	0.762	0.600	0.485
0.80	51.200	21.333	8.000	4.267	2.667	1.829	1.333	1.016	0.800	0.646
1.00	64.000	26.667	10.000	5.333	3.333	2.286	1.667	1.270	1.000	0.808
IEC SHORT INVERSE										
0.05	0.153	0.089	0.056	0.044	0.038	0.034	0.031	0.029	0.027	0.026
0.10	0.306	0.178	0.111	0.088	0.075	0.067	0.062	0.058	0.054	0.052
0.20	0.612	0.356	0.223	0.175	0.150	0.135	0.124	0.115	0.109	0.104
0.40	1.223	0.711	0.445	0.351	0.301	0.269	0.247	0.231	0.218	0.207
0.60	1.835	1.067	0.668	0.526	0.451	0.404	0.371	0.346	0.327	0.311
0.80	2.446	1.423	0.890	0.702	0.602	0.538	0.494	0.461	0.435	0.415
1.00	3.058	1.778	1.113	0.877	0.752	0.673	0.618	0.576	0.544	0.518

TDM	CURRENT (I/I_{pickup})									
	1.5	2.0	3.0	4.0	5.0	6.0	7.0	8.0	9.0	10.0
Rectifier										
0.05	264.241	48.313	4.896	0.976	0.280	0.101	0.042	0.020	0.010	0.006
0.10	528.482	96.626	9.792	1.952	0.559	0.201	0.085	0.040	0.021	0.012
0.20	1056.964	193.251	19.583	3.904	1.119	0.403	0.170	0.080	0.042	0.023
0.40	2113.928	386.502	39.167	7.808	2.237	0.806	0.340	0.161	0.083	0.046
0.60	3170.891	579.754	58.750	11.712	3.356	1.209	0.510	0.241	0.125	0.069
0.80	4227.855	773.005	78.334	15.615	4.474	1.612	0.680	0.322	0.166	0.092
1.00	5284.819	966.256	97.917	19.519	5.593	2.015	0.850	0.402	0.208	0.115
Standard Inverse (1.3s)										
0.05	0.373	0.217	0.137	0.108	0.093	0.083	0.076	0.071	0.068	0.064
0.10	0.745	0.435	0.273	0.216	0.186	0.166	0.153	0.143	0.135	0.129
0.20	1.491	0.870	0.546	0.432	0.371	0.333	0.306	0.286	0.270	0.258
0.40	2.982	1.739	1.093	0.864	0.742	0.665	0.612	0.572	0.540	0.515
0.60	4.473	2.609	1.639	1.295	1.113	0.998	0.918	0.858	0.811	0.773
0.80	5.964	3.479	2.186	1.727	1.484	1.331	1.224	1.144	1.081	1.030
1.00	7.455	4.348	2.732	2.159	1.856	1.664	1.530	1.429	1.351	1.288

IAC CURVES

The curves for the General Electric type IAC relay family are derived from the formula:

$$T = TDM \times \left[A + \frac{B}{\left(I/I_{pickup}\right) - C} + \frac{D}{\left(\left(I/I_{pickup}\right) - C\right)^2} + \frac{E}{\left(\left(I/I_{pickup}\right) - C\right)^3} \right], \quad T_{RESET} = TDM \times \left[\frac{t_r}{1 - \left(I/I_{pickup}\right)^2} \right]$$

Where:

- T = operate time (in seconds)
- TDM = Multiplier setting
- I = input current
- I_{pickup} = Pickup Current setting
- A to E = constants
- t_r = characteristic constant
- T_{RESET} = reset time in seconds (assuming energy capacity is 100% and RESET is `Timed`)

GE TYPE IAC INVERSE TIME CURVE CONSTANTS

IAC CURVE SHAPE	A	B	C	D	E	t_r
IAC Extremely Inverse	0.0040	0.6379	0.6200	1.7872	0.2461	6.008
IAC Very Inverse	0.0900	0.7965	0.1000	-1.2885	7.9586	4.678
IAC Inverse	0.2078	0.8630	0.8000	-0.4180	0.1947	0.990
IAC Short Inverse	0.0428	0.0609	0.6200	-0.0010	0.0221	0.222

IAC CURVE TRIP TIMES (IN SECONDS)

TDM	CURRENT (I/I_{pickup})									
	1.5	2.0	3.0	4.0	5.0	6.0	7.0	8.0	9.0	10.0
IAC EXTREMELY INVERSE										
0.5	1.699	0.749	0.303	0.178	0.123	0.093	0.074	0.062	0.053	0.046
1.0	3.398	1.498	0.606	0.356	0.246	0.186	0.149	0.124	0.106	0.093
2.0	6.796	2.997	1.212	0.711	0.491	0.372	0.298	0.248	0.212	0.185
4.0	13.591	5.993	2.423	1.422	0.983	0.744	0.595	0.495	0.424	0.370
6.0	20.387	8.990	3.635	2.133	1.474	1.115	0.893	0.743	0.636	0.556
8.0	27.183	11.987	4.846	2.844	1.966	1.487	1.191	0.991	0.848	0.741
10.0	33.979	14.983	6.058	3.555	2.457	1.859	1.488	1.239	1.060	0.926
IAC VERY INVERSE										
0.5	1.451	0.656	0.269	0.172	0.133	0.113	0.101	0.093	0.087	0.083
1.0	2.901	1.312	0.537	0.343	0.266	0.227	0.202	0.186	0.174	0.165
2.0	5.802	2.624	1.075	0.687	0.533	0.453	0.405	0.372	0.349	0.331
4.0	11.605	5.248	2.150	1.374	1.065	0.906	0.810	0.745	0.698	0.662
6.0	17.407	7.872	3.225	2.061	1.598	1.359	1.215	1.117	1.046	0.992
8.0	23.209	10.497	4.299	2.747	2.131	1.813	1.620	1.490	1.395	1.323
10.0	29.012	13.121	5.374	3.434	2.663	2.266	2.025	1.862	1.744	1.654
IAC INVERSE										
0.5	0.578	0.375	0.266	0.221	0.196	0.180	0.618	0.160	0.154	0.148
1.0	1.155	0.749	0.532	0.443	0.392	0.360	0.337	0.320	0.307	0.297
2.0	2.310	1.499	1.064	0.885	0.784	0.719	0.674	0.640	0.614	0.594
4.0	4.621	2.997	2.128	1.770	1.569	1.439	1.348	1.280	1.229	1.188
6.0	6.931	4.496	3.192	2.656	2.353	2.158	2.022	1.921	1.843	1.781
8.0	9.242	5.995	4.256	3.541	3.138	2.878	2.695	2.561	2.457	2.375
10.0	11.552	7.494	5.320	4.426	3.922	3.597	3.369	3.201	3.072	2.969
IAC SHORT INVERSE										
0.5	0.072	0.047	0.035	0.031	0.028	0.027	0.026	0.026	0.025	0.025
1.0	0.143	0.095	0.070	0.061	0.057	0.054	0.052	0.051	0.050	0.049
2.0	0.286	0.190	0.140	0.123	0.114	0.108	0.105	0.102	0.100	0.099
4.0	0.573	0.379	0.279	0.245	0.228	0.217	0.210	0.204	0.200	0.197
6.0	0.859	0.569	0.419	0.368	0.341	0.325	0.314	0.307	0.301	0.296
8.0	1.145	0.759	0.559	0.490	0.455	0.434	0.419	0.409	0.401	0.394
10.0	1.431	0.948	0.699	0.613	0.569	0.542	0.524	0.511	0.501	0.493

I2T CURVES

The curves for the I^2t are derived from the formula:

$$T = TDM \times \left[\frac{100}{\left(I / I_{pickup}\right)^{2}} \right], \quad T_{RESET} = TDM \times \left[\frac{100}{\left(I / I_{pickup}\right)^{-2}} \right]$$

Where:

- T = operate time (in seconds)
- TDM = Multiplier setting
- I = input current
- I_{pickup} = Pickup Current setting
- T_{RESET} = reset time in seconds (assuming energy capacity is 100% and RESET is `Timed`)

I2T CURVE TRIP TIMES (IN SECONDS)

TDM	CURRENT (I/I_{pickup})									
	1.5	2.0	3.0	4.0	5.0	6.0	7.0	8.0	9.0	10.0
0.05	2.22	1.25	0.55	0.31	0.20	0.14	0.10	0.08	0.06	0.05
0.10	4.44	2.50	1.11	0.63	0.40	0.28	0.20	0.16	0.12	0.10
1.00	44.44	25.00	11.11	6.25	4.00	2.78	2.04	1.56	1.23	1.00
10.00	444.44	250.00	111.11	62.50	40.00	27.78	20.41	15.63	123.5	10.00
100.00	4444.44	2500.00	1111.1	625.00	400.00	277.78	204.08	156.25	123.46	100.00
600.00	26666.7	15000.0	6666.7	3750.0	2400.0	1666.7	1224.5	937.50	740.74	600.00

I4T CURVES

The curves for the I^4t are derived from the formula:

$$T = TDM \times \left[\frac{100}{\left(I / I_{pickup}\right)^{4}} \right], \quad T_{RESET} = TDM \times \left[\frac{100}{\left(I / I_{pickup}\right)^{-4}} \right]$$

Where:

- T = operate time (in seconds)
- TDM = Multiplier setting
- I = input current
- I_{pickup} = Pickup Current setting
- T_{RESET} = reset time in seconds (assuming energy capacity is 100% and RESET is `Timed`)

I4T CURVE TRIP TIMES (IN SECONDS)

TDM	CURRENT (I/I_{pickup})									
	1.5	2.0	3.0	4.0	5.0	6.0	7.0	8.0	9.0	10.0
0.05	0.9876	0.3125	0.0617	0.0198	0.0008	0.0038	0.0021	0.0012	0.0007	0.0005
0.10	1.9753	0.6250	0.1235	0.0391	0.0160	0.0077	0.0042	0.0024	0.0015	0.0010
1.00	19.753	6.250	1.235	0.391	0.160	0.077	0.042	0.024	0.015	0.010
10.00	197.531	62.500	12.346	3.906	1.600	0.772	0.416	0.244	0.152	0.100

TDM	CURRENT (I/I_{pickup})									
	1.5	2.0	3.0	4.0	5.0	6.0	7.0	8.0	9.0	10.0
100.00	1975.31	625.00	123.46	39.06	16.00	7.72	4.16	2.44	1.52	1.00
600.00	11851.9	3750.0	740.7	234.4	96.00	46.3	25.0	14.65	9.14	6.00

RI (RAPID INVERSE) CHARACTERISTIC

The RI operate curve is represented by the following equation

$$T = k(RI) * \left[\frac{1}{0.339 - \frac{0.236}{\left({}^{I}/_{I_{pickup}} \right)}} \right]$$

where:

- T is the operating time
- k(RI) is the Time Multiplier setting.
- I = input current,
- I_{pickup} = Pickup Current setting

> *Note:*
> *When using RI for the Operate characteristic, DT (Definite Time) is always used for the Reset characteristic.*

RI CURVE TRIP TIMES (IN SECONDS)

MULTIPLIER (k(RI))	CURRENT (I/Ipickup)									
	1.5	2.0	3.0	4.0	5.0	6.0	7.0	8.0	9.0	10.0
0.1	0.550	0.452	0.384	0.357	0.343	0.334	0.328	0.323	0.320	0.317
0.2	1.101	0.905	0.768	0.714	0.685	0.667	0.655	0.646	0.639	0.634
0.4	2.202	1.810	1.536	1.429	1.371	1.335	1.310	1.292	1.279	1.268
0.6	3.303	2.715	2.305	2.143	2.056	2.002	1.965	1.939	1.918	1.902
0.8	4.404	3.620	3.073	2.857	2.742	2.670	2.620	2.585	2.558	2.536
1.0	5.505	4.525	3.841	3.571	3.427	3.337	3.276	3.231	3.197	3.171

IDG CURVE

The IDG curve is commonly used for time delayed neutral/ground fault protection in the Swedish market. The IDG curve is represented by the following equation:

$$T = 5.8 - 1.35 \times \log_e (I/I_{pickup})$$

where:

- T is the operating time
- I = input current,
- I_{pickup} = Pickup Current setting.

The ***IDG Is*** setting is set as a multiple of the Ground/Neutral overcurrent setting I_{pickup} for the IDG curve. It determines the actual current threshold at which the element starts.

The ***IDG Time*** setting sets the minimum operate time at high levels of fault current for IDG curves.

> *Note:*
> *When using IDG for the Operate characteristic, DT (Definite Time) with a value of zero is recommended to use for the Reset characteristic.*

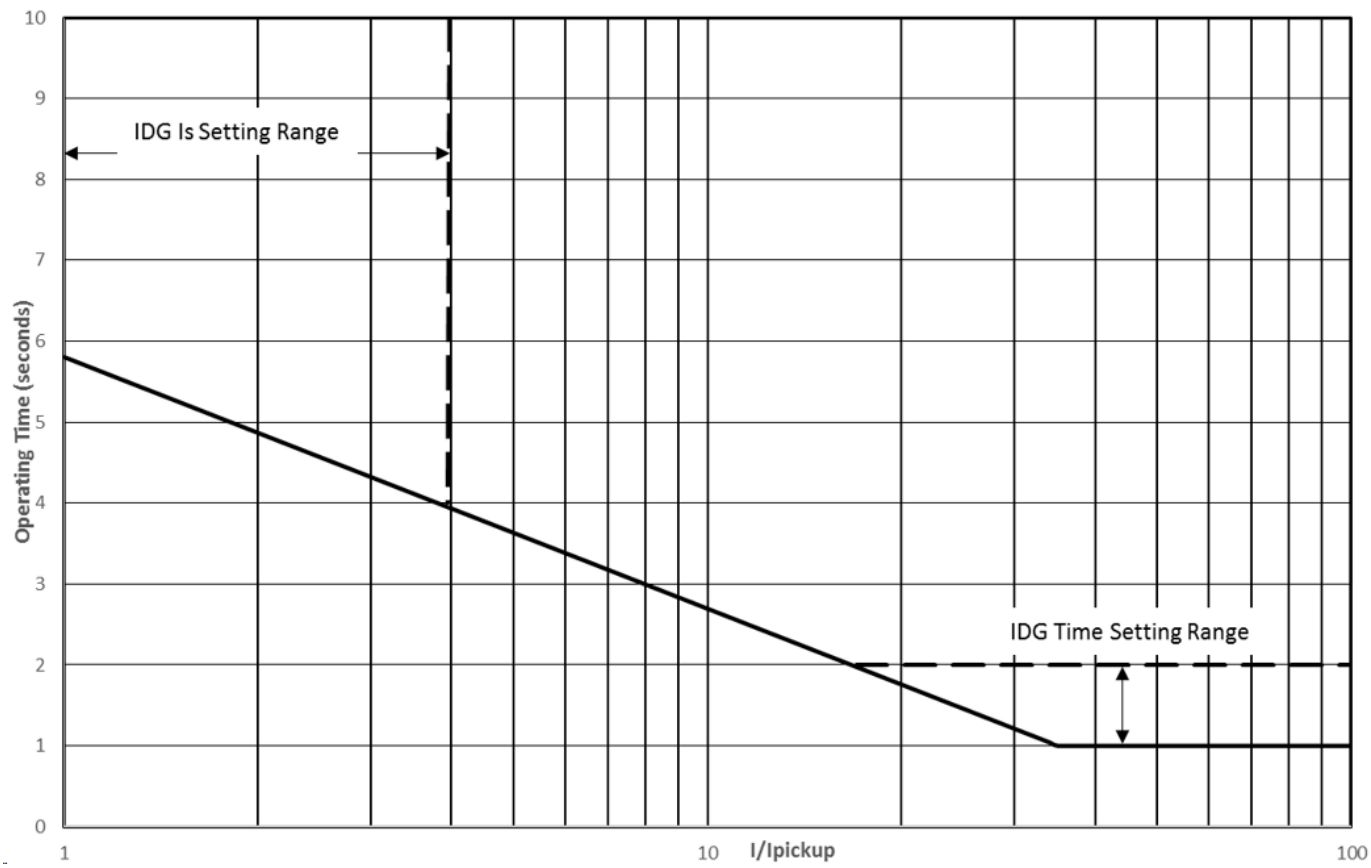

Figure 144: IDG Characteristic

EPATR B CURVE

The EPATR B curve is commonly used for Sensitive Earth Fault protection. It is based on primary current settings, employing a SEF CT ratio of 100:1 A. The EPATR_B curve has 3 separate segments defined in terms of the primary current. It is defined as follows:

Segment	Primary Current Range Based on 100A: 1A CT Ratio	Current/Time Characteristic
1	ISEF = 0.5A to 6.0A	t = 432 X TMS / $ISEF^{0.655}$ sec
2	ISEF = 6.0A to 200A	t = 800xTMS / ISEF sec
3	ISEF > 200A	t = 4 x TMS sec

where TMS (time multiplier setting) is 0.025 - 1.2 in steps of 0.025.

Note:
When using EPATR B curve, DT (Definite Time) is always used for the Reset characteristic.

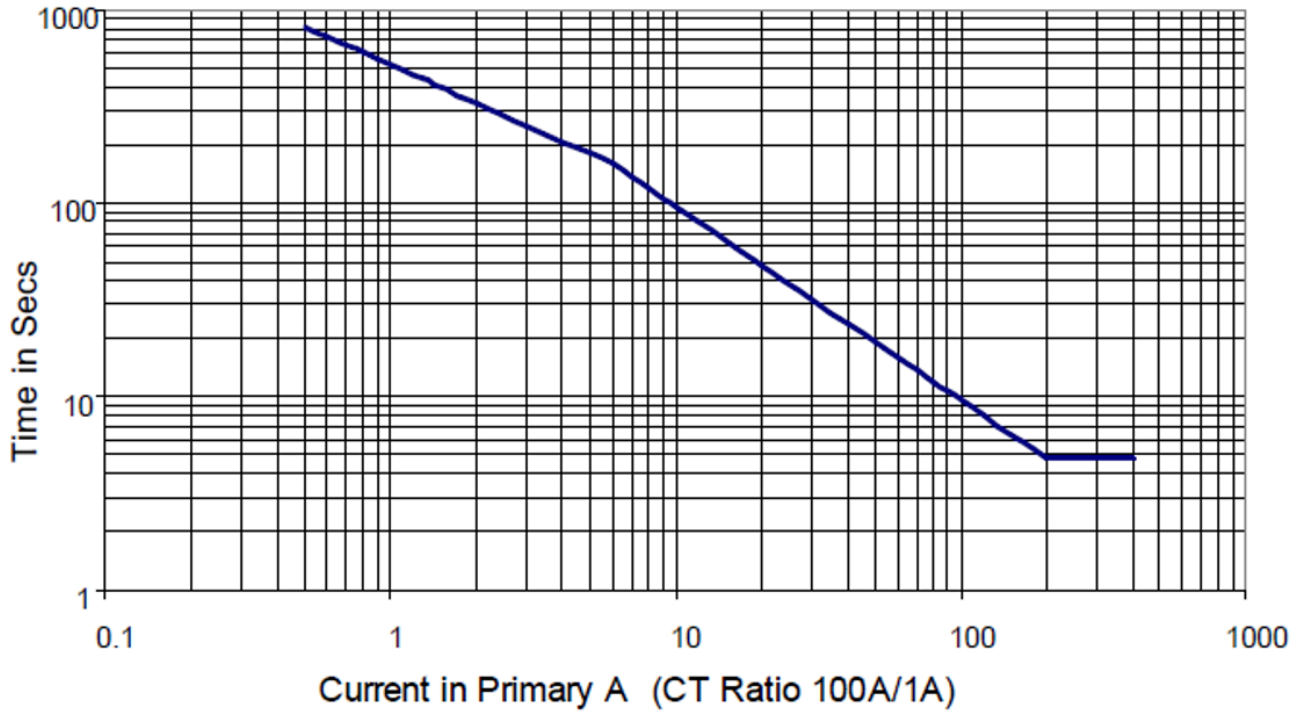

Figure 145: EPATR B characteristic shown for TMS = 1.0

FLEXCURVES

The custom FlexCurves are described in detail in the FlexCurves section of this chapter. The curve shapes for the FlexCurves are derived from the formulae:

$$T = TDM \times [FlexCurveTime \text{ at } (I/I_{pickup})] \text{ when } (I/I_{pickup}) \geq 1.00$$

$$TRESET = TDM \times [FlexCurveTime \text{ at } (I/I_{pickup})] \text{ when } (I/I_{pickup}) \leq 0.98$$

Where:

- T = operate time (in seconds),
- TDM = Multiplier setting,
- I = input current,
- Ipickup = Pickup Current setting,
- T_{RESET} = reset time in seconds (assuming energy capacity is 100% and RESET is timed)

Note:
Flexcurve A/B/C/D is renamed as Def User Curve A/B/C/D

DEFINITE TIME CURVES

The Definite Time curve shape operates as soon as the pickup level is exceeded for a specified period of time. The base Definite Time curve delay is in seconds. The curve multiplier of 0.05 to 600 makes this delay adjustable from 50 to 600000 milliseconds.

$$T = TDM \text{ in seconds, when } I > I_{pickup}$$

$$T_{reset} = TDM \text{ in seconds}$$

Where:

- T = operate time (in seconds)
- TDM = Multiplier setting
- I = input current
- I_{pickup} = Pickup Current setting
- T_{RESET} = reset time in seconds (assuming energy capacity is 100% and RESET is `Timed`)

> *Note:*
> *Note: In Definite Time Curves, Multiplier setting value is provided by 'Time Delay' setting.*

9.2.1.2 PHASE TIME OVERCURRENT PROTECTION (51P)

You can configure the TOC element as follows:

- Apply any of the IEEE, ANSI, IEC, and IAC standard inverse curves
- Apply any of the four FlexCurves
- Set it to definite time.

The selection of Time Dial Multiplier and minimum Pickup helps to fine tune the protection for accurate upstream/downstream coordination and during certain conditions, such as manual closing and maintenance.

The settings of this function are applied to each of the three phases to produce *Pickup* and *Trip* flags per phase. There is no intentional dead band when the current is above the Pickup level. However the Pickup accuracy is guaranteed within the current input accuracy of 1.5% above the set pickup value. The time overcurrent (TOC) Pickup flag is asserted, when the current on any phase is above the pickup value. The TOC Trip flag is asserted if the element stays picked up for the time defined by the selected inverse curve and the magnitude of the current. The element drops from Pickup without operating if the measured current drops below 97 to 98% of the Pickup value before the time for operation is reached. When Definite Time is selected, the time for TOC operation is defined only by the ***TDM*** setting. When in Definite Time mode, ***TDM*** sets the time to operate in seconds.

Path: ***Setpoints*** > ***Protection*** > ***Group 1(6)*** > ***Current*** > ***Phase TOC*** > ***Phase TOC 1(X)***

FUNCTION

Range: Disabled, Trip, Alarm, Latched Alarm, Latched Trip, Configurable

Default: Disabled

SIGNAL INPUT

Range: dependent upon the order code

Default: CT Bank 1-J1

This setting provides the CT Bank input. The default bank names can be changed in: ***Setpoints > System > Current Sensing > [Name] > CT Bank Name***.

INPUT

Range: Phasor, RMS

Default: Phasor

This selection defines the method of processing of the current signal. It could be Root Mean Square (RMS) or Fundamental Phasor Magnitude.

PICKUP

Range: 0.020 to 30.000 x CT in steps of 0.001 x CT

Default: 1.000 x CT

CURVE

Range: Definite Time, IEC Curve A, IEC Curve B, IEC Curve C, IEC Short Inverse, Long Time Inverse, Rectifier,SI(1.3s), BPN EDF, IEEE Mod Inverse, IEEE Very Inverse, IEEE Extr. Inverse, US Inverse, US ST Inverse, ANSI Extr. Inverse, ANSI Very Inverse, ANSI Norm Inverse, ANSI Mod Inverse, IAC Extr. Inverse, IAC Very Inverse, IAC Inverse, IAC Short Inverse, I^2t, I^4t, Rapid Inverse, FlexCurve A, FlexCurve B, FlexCurve C, FlexCurve D.

Default: IEEE Mod Inverse

This setting sets the shape of the selected over-current inverse curve. If none of the standard curve shapes is appropriate, a FlexCurve can be created. Refer to the User curve and the FlexCurve setup for more details on their configurations and usage.

TDM

Range: 0.01 to 28800.00 in steps of 0.01

Default: 1.00

This is the Time Multiplier Setting to adjust the operate time of IEC Curve A/B/C, IEEE M/V/E Inverse, US Inverse, US Short Time, ANSI E/V/N/M Inverse, IAC E/V/N/S Inverse, I2T and I4T curves. For example, if an IEEE Extremely Inverse curve is selected with TDM = 2, and the fault current is 5 times bigger than the PKP level, the operation of the element will not occur before 2.59 s have elapsed after Pickup.

TMS

Range: 0.025 to 1.200 in steps of 0.005

Default: 1.00

This is the Time Multiplier Setting to adjust the operate time of IEC Short Inverse, Long Time Inverse, Rectifier, Standard Inverse SI(1.3s), and BPN EDF curves.

K (RI)

Range: 0.10 to 10.00 in steps of 0.05

Default: 1.00

This setting defines the Time multiplier constant to adjust the operate time of the Rapid Inverse (RI) curve.

This k(RI) setting can be made visible from setting management, only when the ***Curve*** setting is selected as `Rapid Inverse`.

TIME DELAY

Range: 0.000 s to 28800.000 s in steps of 0.001 s

Default: 1.000

This setting defines the time delay for operation. This Time Delay setting can be made visible from setting management, only when the ***Curve*** setting is selected as Definite Time.

DT ADDER

Range: 0.00 to 100.00 s in steps of 0.01 s

Default: 0.00

This setting adds an additional fixed time delay to the ***IDMT Operate*** characteristic.The ***DT Adder*** setting will be visible for when any IDMT curves are selected under the ***Curve*** setting.

RESET

Range: DT, Inverse

Default: DT

Selection of a Definite Time (DT) or Inverse reset time is provided using this setting.

If Definite Time (DT) reset is selected, the Phase TOC element will reset after a time delay provided by the ***Reset Time*** setting. If Inverse reset is selected, the time to reset is calculated based on the reset equation for the selected inverse curve.

Note: When using IEC Short Inverse, Long Time Inverse, BPN EDF, Rectifier, Rapid Inverse curves for the Operate characteristic, Definite Time is used by default as Reset characteristic.

RESET TIME

Range: 0.000 to 28800.000 in steps of 0.001

Default: 0.000

This setting provides selection for dropout time delay used to delay the dropout of the detection of the overcurrent condition.

This can be made visible from setting management when the ***Reset*** setting is selected as DT or when using Long Time Inverse, IEC Short Inverse, BPN EDF, Rectifier, and Rapid Inverse curves.

DIRECTION

Range: Disabled, Forward (Ph Dir OCx FWD), Reverse (Ph Dir OCx REV)

Default: Disabled

This setting determines the direction of Phase TOC element.

V DEP OC

Range: Disabled, VCO, VRO

Default: Disabled

V Dep OC (Voltage Dependent Overcurrent) replaces the legacy Voltage Restrained Overcurrent (VRO) function by adding Voltage Controlled Overcurrent functionality to it. This setting can now select Disabled, VCO or VRO. When enabled, this feature controls the Pickup value of each individual Phase Time Overcurrent element in a fixed relationship with its corresponding phase input voltage.

An overcurrent protection scheme is co-ordinated throughout a system such that cascaded operation is achieved. This means that if for some reason a downstream circuit breaker fails to trip for a fault condition, the next upstream circuit breaker should trip.

If the current seen by a local device for a remote fault condition is below its overcurrent setting, a voltage dependent element may be used to increase the sensitivity to such faults. As a reduction in system voltage will occur during overcurrent conditions, this may be used to enhance the sensitivity of the overcurrent protection by reducing the pick-up level.

If cold load pickup, autoreclosing, or manual close blocking features are controlling the protection, the Phase TOC Voltage Restraint does not work, even when enabled.

In Voltage Controlled Operation (VCO) mode of operation, the under-voltage detector is used to produce a step change in the current setting, when the voltage falls below the voltage setting V Dep OC V<1. The operating characteristic of the current setting when voltage-controlled mode is selected is as follows:

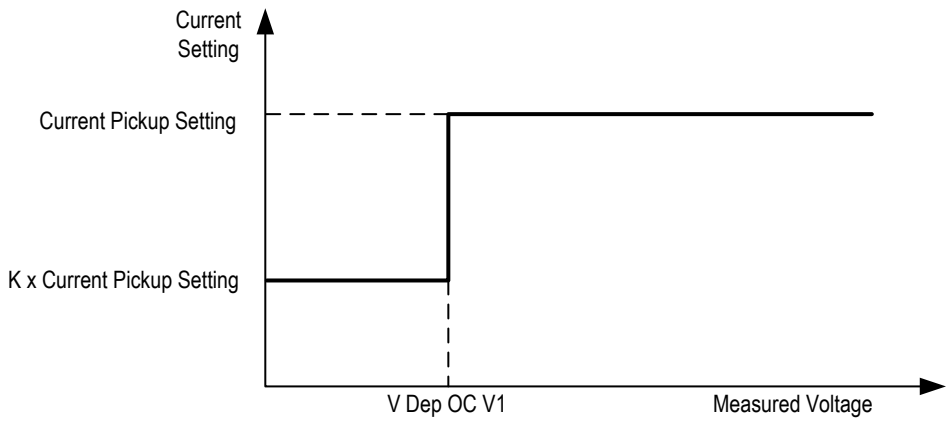

Figure 146: VCO operation

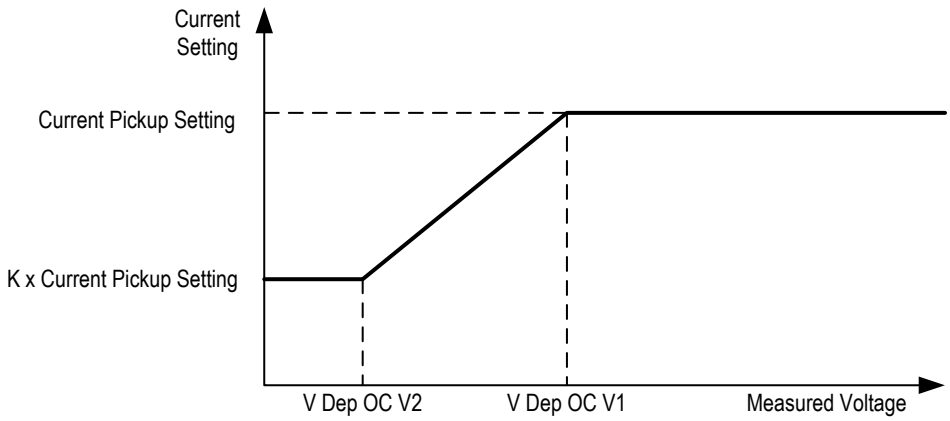

Figure 147: VRO operation

VT INPUT

Range: Dependent upon the order code

Default: Ph VT Bank 1-J2

This setting provides the selection for the voltage input bank, when ***V Dep OC*** is enabled.

V Dep OC V1

Range: 0.01 to 1.20 x VT in steps of 0.01 x VT

Default: 0.72 x VT

This setting sets the voltage V1 threshold at which the current setting of the overcurrent stage becomes reduced. This is on a per phase basis.

V Dep OC k

Range: 0.10 to 1.00 in steps of 0.05

Default: 0.25

This setting determines the Overcurrent multiplier factor used to reduce the pick-up overcurrent setting.

V Dep OC V2

Range: 0.01 to 1.2 x VT in steps of 0.01 x VT

Default: 0.54 x VT

This setting sets the voltage V2 threshold at which the current setting of the overcurrent stage becomes reduced. This is on a per phase basis.

BLOCK

Range: Off, Any FlexLogic operand

Default: Off

OUTPUT RELAY X

Range: Operate, Do Not Operate

Default: Do Not Operate

EVENTS

Range: Enabled, Disabled

Default: Enabled

TARGETS

Range: Self-reset, Latched, Disabled

Default: Self-reset

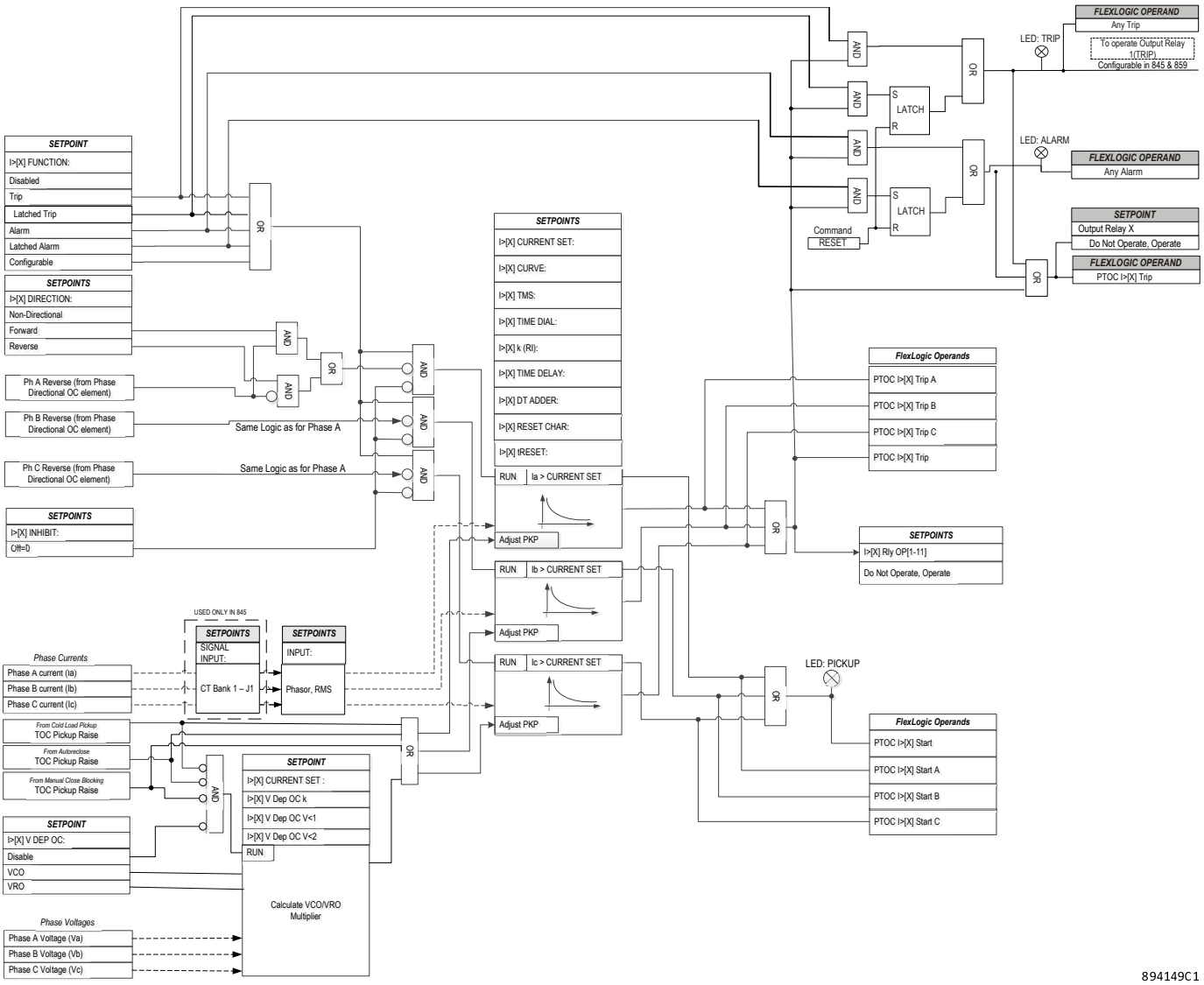

Figure 148: Phase Time Overcurrent Protection logic diagram

9.2.1.3 PHASE INSTANTANEOUS OVERCURRENT PROTECTION (50P)

The PIOC protection consists of three identical instantaneous overcurrent elements, one for each phase. All three have identical characteristics. The settings of this function are applied to each of the three phases to produce *Pickup* and *Trip* flags per phase. There is no intentional dead band when the current is above the Pickup level. However the Pickup accuracy is guaranteed within the current input accuracy of 3% above the set pickup value. The IOC Pickup flag is asserted, when the current of any phase is above the pickup value. The IOC Operate flag is asserted if the element stays picked up for the time defined in ***PH IOC PKP DELAY***. The element drops from Pickup without operating if the measured current drops below 97-98% of the Pickup value before the time for operation is reached.

Path: ***Setpoints*** > ***Protection*** > ***Group1(6)*** > ***Current*** > ***Phase IOC 1(X)***

FUNCTION

Range: Disabled, Trip, Alarm, Latched Alarm, Configurable

Note: Relays with firmware version 4 and later have a `Latched Trip` *option*

Default: Disabled

SIGNAL INPUT

Range: dependent upon the order code

Default: CT Bank 1-J1

This setting provides the CT Bank input. The default bank names can be changed in: ***Setpoints > System > Current Sensing > [Name] > CT Bank Name***.

INPUT

Range: Phasor, RMS

Default: Phasor

PICKUP

Range: 0.010 to 30.000 x CT in steps of 0.001 x CT

Default: 1.000 x CT

DIRECTION

Range: Disabled, Forward (Ph Dir OCx FWD), Reverse (Ph Dir OCx REV)

Default: Disabled

PICKUP DELAY

Range: 0.000 to 28800.000 s in steps of 0.001 s

Default: 0.000 s

DROPOUT DELAY

Range: 0.000 to 28800.000 s in steps of 0.001 s

Default: 0.000 s

BLOCK

Range: Off, Any FlexLogic operand

Default: Off

OUTPUT RELAY X

Range: Operate, Do Not Operate

Default: Do Not Operate

EVENTS

Range: Enabled, Disabled

Default: Enabled

TARGETS

Range: Self-reset, Latched, Disabled

Default: Self-reset

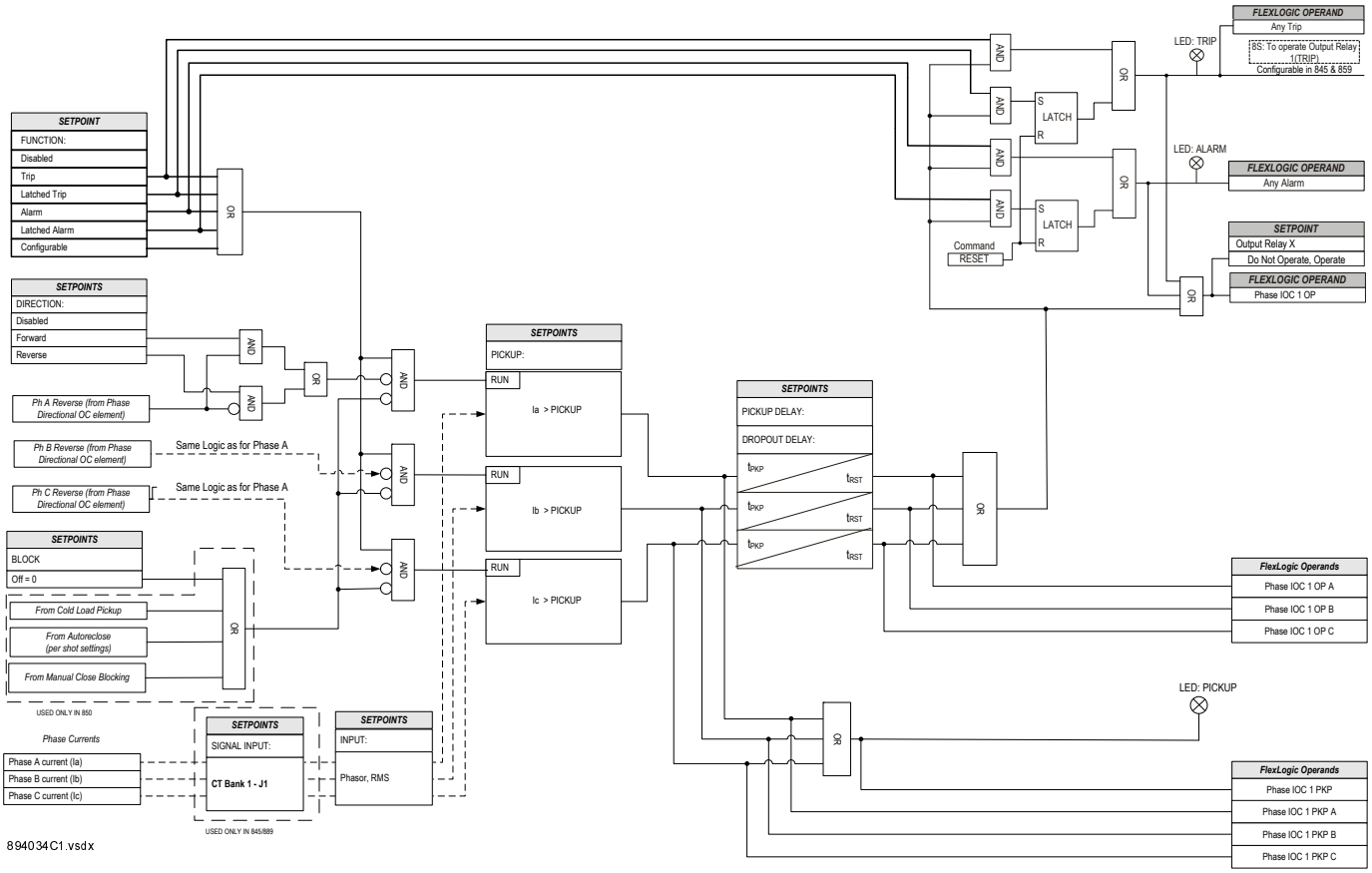

Figure 149: Phase Instantaneous Overcurrent logic diagram

9.2.1.4 PHASE DIRECTIONAL OVERCURRENT PROTECTION (67P)

The Phase Directional Overcurrent protection elements (one for each of phases A, B, and C) determine the phase current flow direction for steady state and fault conditions and can be used to control the operation of the phase overcurrent elements by sending directional bits to inputs of these elements.

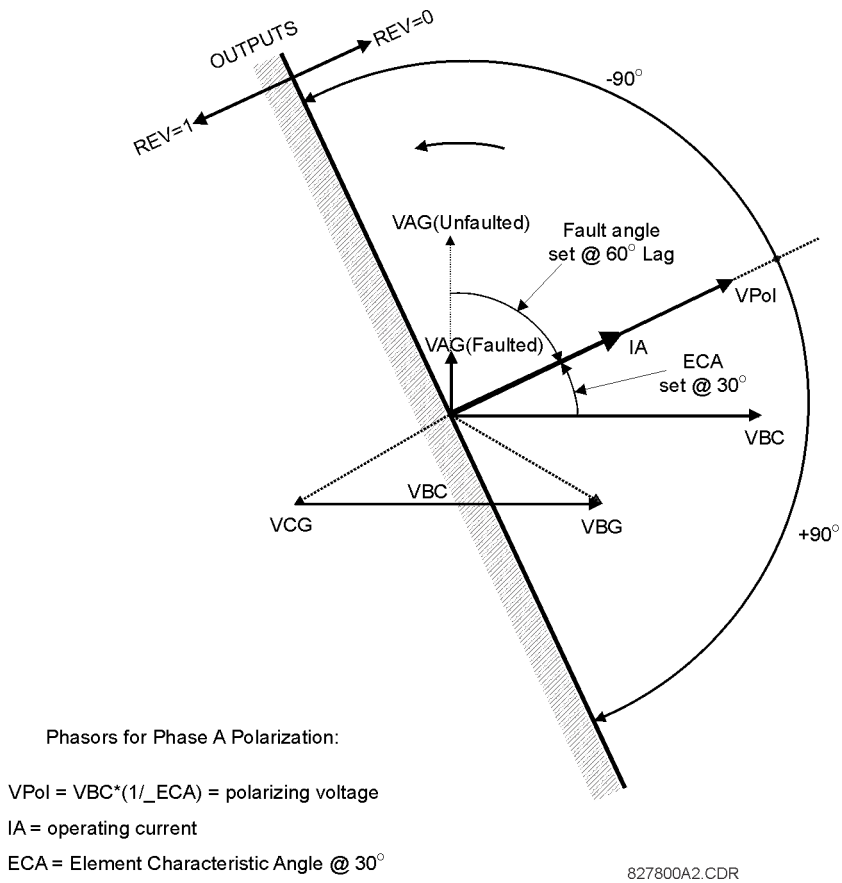

Figure 150: Phasors for phase A polarization

The element is intended to send a directional signal to an overcurrent element to prevent an operation when current is flowing in a particular direction. The direction of current flow is determined by measuring the phase angle between the current from the phase CTs and the line-line voltage from the VTs, based on the 90° or quadrature connection. To increase security for three phase faults very close to the VTs used to measure the polarizing voltage, a voltage memory feature is incorporated. This feature remembers the measurement of the polarizing voltage 3 cycles back and uses it to determine direction. The voltage memory remains valid for one second after the voltage has collapsed.

The main component of the phase directional element is the phase angle comparator with two inputs: the operating signal (phase current) and the polarizing signal (the line voltage, shifted in the leading direction by the characteristic angle, ECA).

The following table shows the operating and polarizing signals used for phase directional control:

PHASE	OPERATING SIGNAL	POLARIZING SIGNAL (Vpol)	
		ABC PHASE SEQUENCE	ACB PHASE SEQUENCE
A	Angle of Ia	Angle of Vbc × (1∠ECA)	Angle of Vcb × (1∠ECA)
B	Angle of Ib	Angle of Vca × (1∠ECA)	Angle of Vac × (1∠ECA)
C	Angle of Ic	Angle of Vab × (1∠ECA)	Angle of Vba × (1∠ECA)

Note:
For 850D dual feeder applications, when the signal input is from CT Bank 1 – J1, VT Bank 1-J2 is used as the polarizing voltage source. Similarly, when the signal input is from CT Bank 2 – K1, VT Bank 2 – K2 is used as the polarizing voltage source.

Path: ***Setpoints*** > ***Protection*** > ***Group1(6)*** > ***Current*** > ***Phase Dir OC 1(X)***

FUNCTION

Range: Disabled, Enabled

Default: Disabled

SIGNAL INPUT

Range: dependent upon the order code

Default: CT Bank 1-J1

This setting provides the CT Bank input. The default bank names can be changed in: ***Setpoints > System > Current Sensing > [Name] > CT Bank Name***.

ECA

Range: 0° to 359° in steps of 1°

Default: 30°

The setting is used to select the element characteristic angle, i.e. the angle by which the polarizing voltage is shifted in the leading direction to achieve dependable operation.

POLARIZING V THRESHOLD

Range: 0.015 to 3.000 x VT in steps of 0.001 x VT

Default: 0.700 x VT

The setting is used to establish the minimum level of voltage for which the phase angle measurement is reliable. The setting is based on VT accuracy.

REV WHEN V MEM EXP

Range: No, Yes

Default: No

The setting is used to select the required operation upon expiration of voltage memory. When set to “Yes” the directional element output value is forced to Reverse when voltage memory expires; when set to “No” the directional element is Forward when voltage memory expires.

BLOCK

Range: Off, Any FlexLogic operand

Default: Off

EVENTS

Range: Enabled, Disabled

Default: Enabled

TARGETS

Range: Self-reset, Latched, Disabled

Default: Self-reset

Note:
The Phase Directional element responds to the forward load current. In the case of a following reverse fault, the element needs some time – in the order of 8 ms – to change the directional signal. Some protection elements such as Instantaneous Overcurrent may respond to reverse faults before the directional signal has changed. A coordination time of at least 10 ms must therefore be added to all the instantaneous protection elements under the supervision of the Phase Directional element. If current reversal is a concern, a longer delay – in the order of 20 ms – is needed.

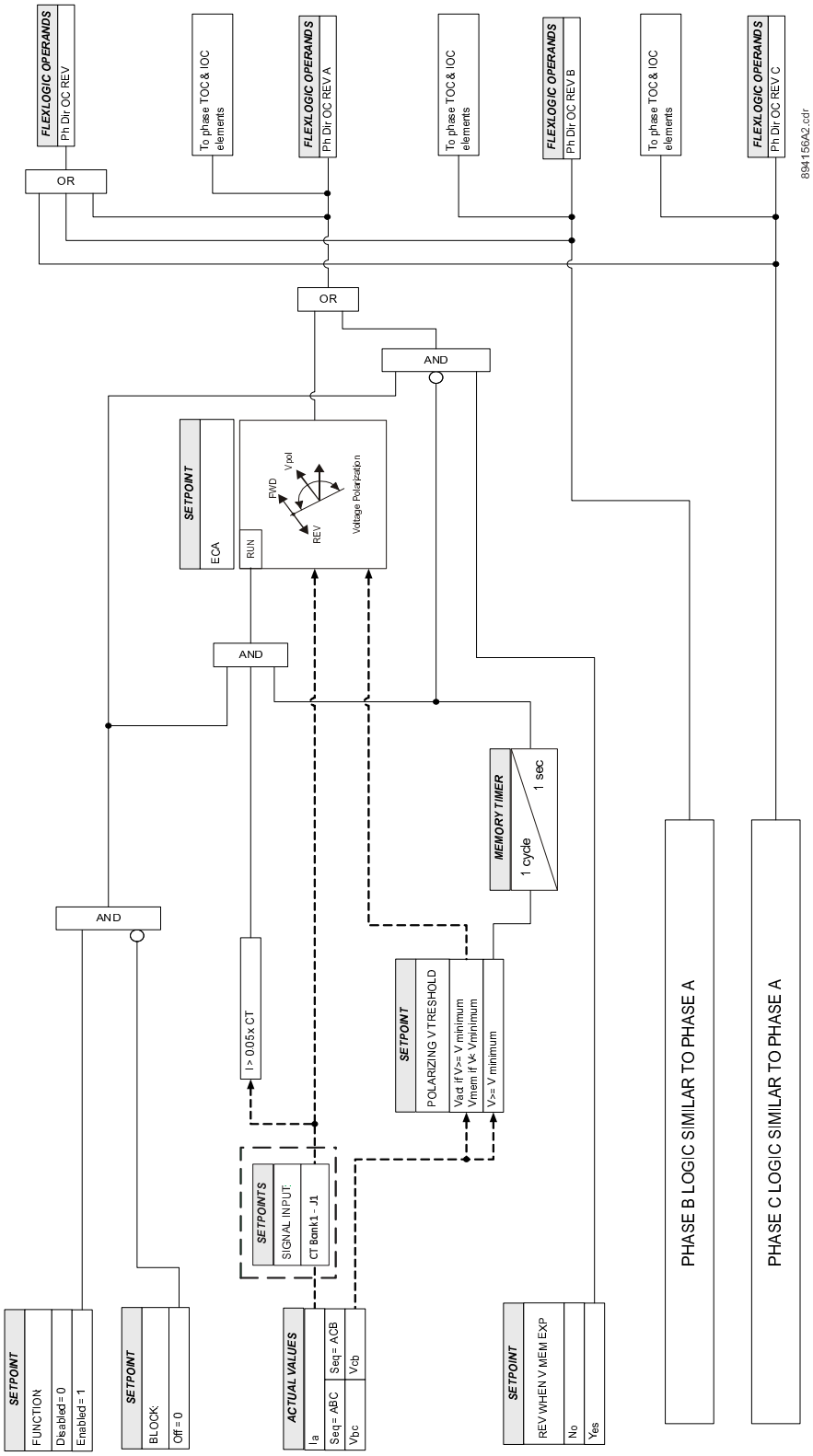

Figure 151: Phase Directional Overcurrent Protection logic diagram

9.2.1.5 NEUTRAL TIME OVERCURRENT PROTECTION (51N)

The relay computes the neutral current (In) using the following formula:

$$|In|=|Ia+Ib+Ic|$$

The settings of this function are applied to the neutral current to produce *Trip* or *Pickup* flags. The Neutral TOC Pickup flag is asserted when the neutral current is above the pickup value. The Neutral TOC Trip flag is asserted if the element stays picked up for the time defined by the selected inverse curve and the magnitude of the current. The element drops from Pickup without operation if the measured current drops below 97 to 98% of the Pickup value before the time for operation is reached. When Definite Time is selected, the time for Neutral TOC operation is defined only by the ***TDM*** setting.

Path: ***Setpoints*** > ***Protection*** > ***Group 1(6)*** > ***Current*** > ***Neutral TOC 1(X)***

FUNCTION

Range: Disabled, Trip, Latched Trip, Alarm, Latched Alarm, Configurable

Default: Disabled

SIGNAL INPUT

Range: dependent upon the order code

Default: CT Bank 1-J1

This setting provides the CT Bank input. The default bank names can be changed in: ***Setpoints > System > Current Sensing > [Name] > CT Bank Name***.

INPUT

Range: Phasor, RMS

Default: Phasor

This selection defines the method of processing of the current signal. It could be Root Mean Square (RMS) or Fundamental Phasor Magnitude.

PICKUP

Range: 0.010 to 30.000 x CT in steps of 0.001 x CT

Default: 0.200 x CT

CURVE

Range: Range: Definite Time, IEC Curve A, IEC Curve B, IEC Curve C, IEC Short Inverse ,Long Time Inverse, Rectifier, SI(1.3s), BPN EDF, IEEE Mod Inverse, IEEE Very Inverse, IEEE Extr. Inverse, US Inverse, US ST Inverse, ANSI Extr. Inverse, ANSI Very Inverse, ANSI Norm Inverse, ANSI Mod Inverse, IAC Extr. Inverse, IAC Very Inverse, IAC Inverse, IAC Short Inverse, I^2t, I^4t, Rapid Inverse, IDG, EPATR B, FlexCurve A, FlexCurve B, FlexCurve C, FlexCurve D.

Default: IEEE Mod Inverse

This setting sets the shape of the selected over-current inverse curve. If none of the standard curve shapes is appropriate, a FlexCurve can be created. Refer to the User curve and the FlexCurve setup for more details on their configurations and usage.

TDM

Range: 0.01 to 600.00 in steps of 0.01

Default: 1.00

This is the Time Multiplier Setting to adjust the operate time of IEC Curve A/B/C, IEEE M/V/E Inverse, US Inverse, US Short Time, ANSI E/V/N/M Inverse, IAC E/V/N/S Inverse, I^2T and I^4T curves.

TMS

Range: 0.025 to 1.200 in steps of 0.005

Default: 1.000

This is the Time Multiplier Setting to adjust the operate time of IEC Short Inverse, Long Time Inverse, Rectifier, Standard Inverse SI(1.3s), BPN EDF and EPATR B curves.

K (RI)

Range: 0.10 to 10.00 Step: 0.05

Default: 1.00

This setting defines the Time multiplier constant to adjust the operate time of the Rapid Inverse (RI) curve.

This setting can be made visible from setting management, only when ***Curve*** setting is selected as `Rapid Inverse`.

IDG Is

Range: 1.0 to 4.0 in steps of 0.1

Default: 1.5

This setting is set as a multiple of the ground fault overcurrent setting for the IDG curve.

It determines the actual current threshold at which the element starts.

This setting can be made visible from setting management, only when the ***Curve*** setting is selected as `IDG`.

IDG Time

Range: 1.00 to 2.00 s in steps of 0.01 s

Default: 1.20

This setting sets the minimum operate time at high levels of fault current for IDG curves.

This setting can be made visible from setting management, only when the ***Curve*** setting is selected as `IDG`.

Time Delay

Range: 0.000 s to 200.000 s in steps of 0.001 s

Default: 1.000

This setting defines the time delay for operation.

This setting can be made visible from setting management, only when the ***Curve*** setting is selected as `DT` (Definite Time).

DT Adder

Range: 0.00 to 100.00 s in steps of 0.01 s

Default: 0.00

This setting adds an additional fixed time delay to the IDMT Operate characteristic.

This setting will be visible for when any IDMT curves are selected under the ***Curve*** setting.

RESET

Range: DT, Inverse

Default: DT

This setting sets a Definite Time (DT) or Inverse reset time.

If Definite Time (`DT`) reset is selected, the Neutral TOC element will reset after a time delay provided by the ***Reset Time*** setting. If `Inverse` reset is selected, the time to reset is calculated based on the reset equation for the selected inverse curve.

When using Long Time Inverse, BPN EDF, Rectifier, IEC Short Inverse, Rapid Inverse, IDG, EPATR B curves the reset is always definite time defined by the setpoint ***Reset Time***.

Reset Time

Range: 0.000 to 100.000 s in stepos of 0.001 s

Default: 0.000s

This setting determines the Reset time for the Definite Time Reset characteristic.

This can be made visible from setting management when the ***Reset*** setting is selected as `DT` or when using Long Time Inverse, IEC Short Inverse, BPN EDF, Rectifier, IDG, EPATR B and Rapid Inverse curves.

DIRECTION

Range: Disabled, Forward (Ntrl Dir OCx FWD), Reverse (Ntrl Dir OCx REV)

Default: Disabled

BLOCK

Range: Off, Any FlexLogic operand

Default: Off

OUTPUT RELAY X

Range: Operate, Do Not Operate

Default: Do Not Operate

EVENTS

Range: Enabled, Disabled

Default: Enabled

TARGETS

Range: Self-reset, Latched, Disabled

Default: Self-reset

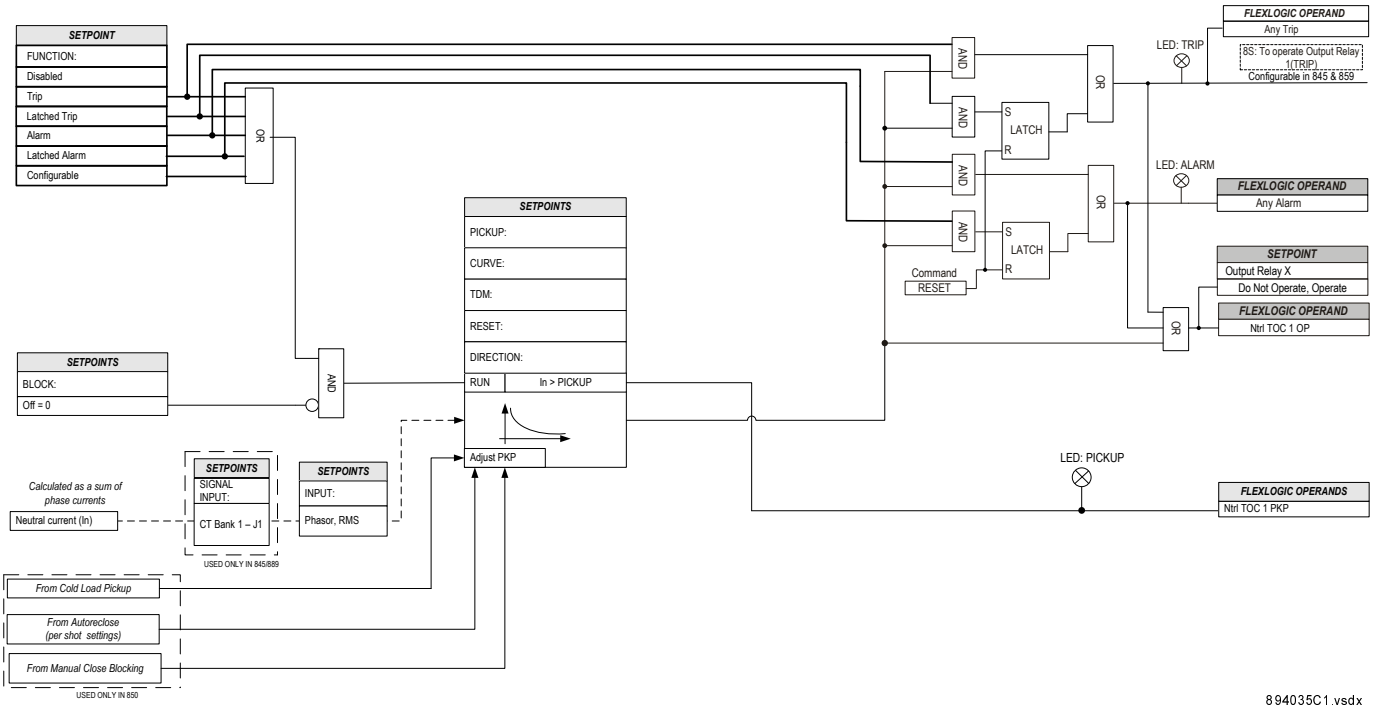

Figure 152: Neutral Time Overcurrent Protection logic diagram

9.2.1.6 NEUTRAL INSTANTANEOUS OVERCURRENT PROTECTION (50N)

The Neutral Instantaneous Overcurrent protection element computes the neutral current (In) using the following formula:

$$|In| = |Ia + Ib + Ic|$$

The element responds to the magnitude of a neutral current fundamental frequency phasor calculated from the phase currents. A positive-sequence restraint is applied for better performance. A small portion (6.25%) of the positive-sequence current magnitude is subtracted from the zero-sequence current magnitude when forming the operating quantity of the element as follows:

$$Iop = 3 * (|I_0| - K * |I_1|) \text{ where } K = 1/16 \text{ and } |I_0| = 1/3 * |In|$$

The positive-sequence restraint allows for more sensitive settings by counterbalancing spurious zero-sequence currents resulting from:

- system unbalances under heavy load conditions
- current transformer (CT) transformation errors of during double-line and three-phase faults
- switch-off transients during double-line and three-phase faults

The positive-sequence restraint must be considered when testing for Pickup accuracy and response time (multiple of Pickup). The operating quantity depends on how test currents are injected into the relay (single-phase injection: Iop = 0.9375 * I_injected three-phase pure zero sequence injection: Iop = 3 * I_injected).

The settings of this function are applied to the neutral current to produce *Pickup* and *Trip* flags. The Neutral IOC Pickup flag is asserted, when the neutral current is above the pickup value. The Neutral IOC Operate flag is asserted if the element stays picked up for the time defined by the Neutral IOC ***PICKUP DELAY*** setting. If the Pickup time delay is set to 0.000 seconds, the Pickup and Operate flags are asserted at the same time. The element drops from Pickup without operation if the neutral current drops below 97 to 98% of the Pickup value.

Path: ***Setpoints*** > ***Protection*** > ***Group 1(6)*** > ***Current*** > ***Neutral IOC 1(X)***

FUNCTION

Range: Disabled, Trip, Alarm, Latched Alarm, Configurable

Note: Relays with firmware version 4 and later have a `Latched Trip` option

Default: Disabled

SIGNAL INPUT

Range: dependent upon the order code

Default: CT Bank 1-J1

This setting provides the CT Bank input. The default bank names can be changed in: ***Setpoints > System > Current Sensing > [Name] > CT Bank Name***.

PICKUP

Range: 0.010 to 30.000 x CT in steps of 0.001 x CT

Default (FW 4.10): 0.20 x CT

DIRECTION

Range: Disabled, Forward (Ntrl Dir OCx FWD), Reverse (Ntrl Dir OCx REV)

Default: Disabled

PICKUP DELAY

Range: 0.000 to 6000.000 s in steps of 0.001 s

Default: 0.000 s

DROPOUT DELAY

Range: 0.000 to 6000.000 s in steps of 0.001 s

Default: 0.000 s

BLOCK

Range: Off, Any FlexLogic operand

Default: Off

OUTPUT RELAY X

Range: Operate, Do Not Operate

Default: Do Not Operate

EVENTS

Range: Enabled, Disabled

Default: Enabled

TARGETS

Range: Self-reset, Latched, Disabled

Default: Self-reset

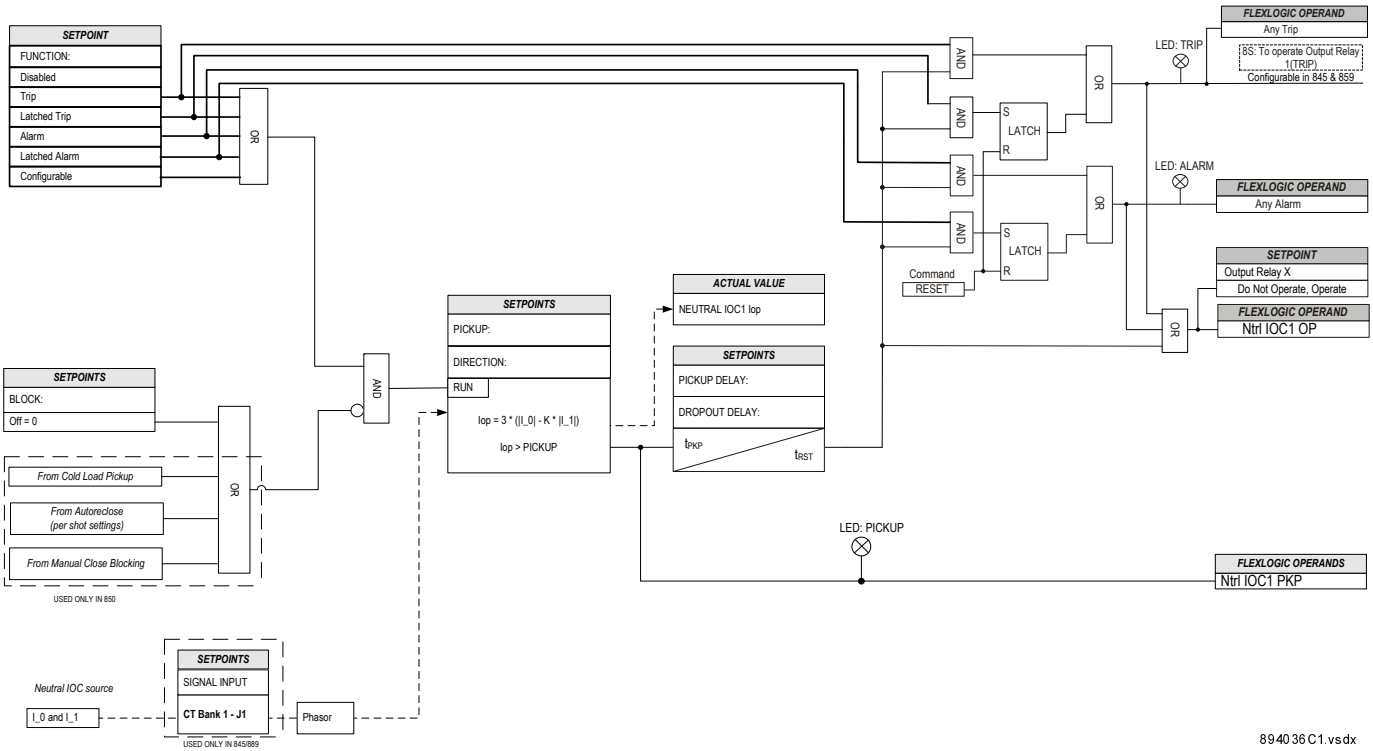

Figure 153: Neutral Instantaneous Overcurrent Protection logic diagram

9.2.1.7 NEUTRAL DIRECTIONAL OVERCURRENT PROTECTION (67N)

> *Note:*
> *For FW 4.10 onwards, V_X (or VX), is know as V_N (or VN)*

The Neutral Directional Overcurrent protection element provides both forward and reverse fault direction indications shown by the operands Ntrl Dir OC FWD and Ntrl Dir OC REV, respectively. The output operands are asserted if the magnitude of the operating current is above a Pickup level (overcurrent unit) and the fault direction is seen as forward or reverse, respectively (directional unit).

The *overcurrent unit* responds to the magnitude of a fundamental frequency phasor of the neutral current calculated from the phase currents. There are separate Pickup settings for the forward-looking and reverse-looking functions. The element applies a positive-sequence restraint for better performance; a small user-programmable portion of the positive-sequence current magnitude is subtracted from the zero sequence current magnitude when forming the operating quantity.

$$Iop = 3 * (|I_0| - K * |I_1|)$$

The positive-sequence restraint allows for more sensitive settings by counterbalancing spurious zero-sequence currents resulting from:

- system unbalances under heavy load conditions
- current transformer (CT) transformation errors of during double-line and three-phase faults
- switch-off transients during double-line and three-phase faults.

The positive-sequence restraint must be considered when testing for Pickup accuracy and response time (multiple of Pickup). The operating quantity depends on the way the test currents are injected into the relay (single-phase injection: $I_{op} = (1 – K) \times I_{injected}$; three-phase pure zero-sequence injection: $I_{op} = 3 \times I_{injected}$).

The positive-sequence restraint is removed for low currents. If the positive-sequence current is below 0.8 x CT, the restraint is removed by changing the constant K to zero. This facilitates better response to high-resistance faults when the unbalance is very small and there is no danger of excessive CT errors as the current is low.

The *directional unit* uses the zero-sequence current (I_0) for fault direction discrimination and may be configured to use either zero-sequence voltage, ground current, or both for polarizing. The following table defines the neutral directional overcurrent element.

Directional unit				Overcurrent unit
Polarizing mode	**Direction**	**Compared phasors**		
Voltage	Forward	-V_0	1_0 x 1∠ECA	Iop = 3 x {|I_0| - K x | I_1|} If |I_1| > 0.8 x CT Iop = 3 x {|I_0|} if |I_1| ≤0.8 x CT
	Reverse	-V_0	-1_0 x 1∠ECA	
Current	Forward	Ig	I_0	
	Reverse	Ig	-I_0	
Dual	Forward	-V_0 or	I_0 x 1∠ECA or	
		Ig	I_0	
	Reverse	-V_0 or	-I_0 x 1∠ECA or	
		Ig	-I_0	

Where:

- V_0 = 1/3 * (Vag + Vbg + Vcg) = zero sequence voltage
- I_0 = 1/3 * In = 1/3 * (Ia + Ib + Ic) = zero sequence current
- ECA = element characteristic angle
- In = neutral current

When ***POLARIZING VOLTAGE*** is set to `Measured VX`, one-third of this voltage is used in place of V0.

The following figure explains the use of the voltage polarized directional unit of the element by showing the voltage-polarized phase angle comparator characteristics for a phase A to ground fault, with:

- ECA = 90° (element characteristic angle = centerline of operating characteristic)
- FWD LA = 80° (forward limit angle = the ± angular limit with the ECA for operation
- REV LA = 80° (reverse limit angle = the ± angular limit with the ECA for operation).

The element incorporates a current reversal logic: if the reverse direction is indicated for at least 1.25 of a power system cycle, the prospective forward indication will be delayed by 1.5 of a power system cycle. The element is designed to emulate an electromechanical directional device. Larger operating and polarizing signals will result in faster directional discrimination bringing more security to element operation.

The forward-looking function is designed to be more secure as compared to the reverse-looking function, and should therefore be used for the tripping direction. The reverse-looking function is designed to be faster as compared to the forward-looking function and should be used for the blocking direction. This allows better protection coordination.

The above bias should be taken into account when using the Neutral Directional Overcurrent element to directionalize other protection elements.

> *Note:*
> *For relays ordered without voltage inputs, the polarizing signal for the Neutral Directional OC element is the ground current (Ig) from the bank selected as Signal Input in the element's menu. In this case the setpoints* ***POLARIZING MODE****, and* ***POLARIZING VOLTAGE*** *are not displayed.*

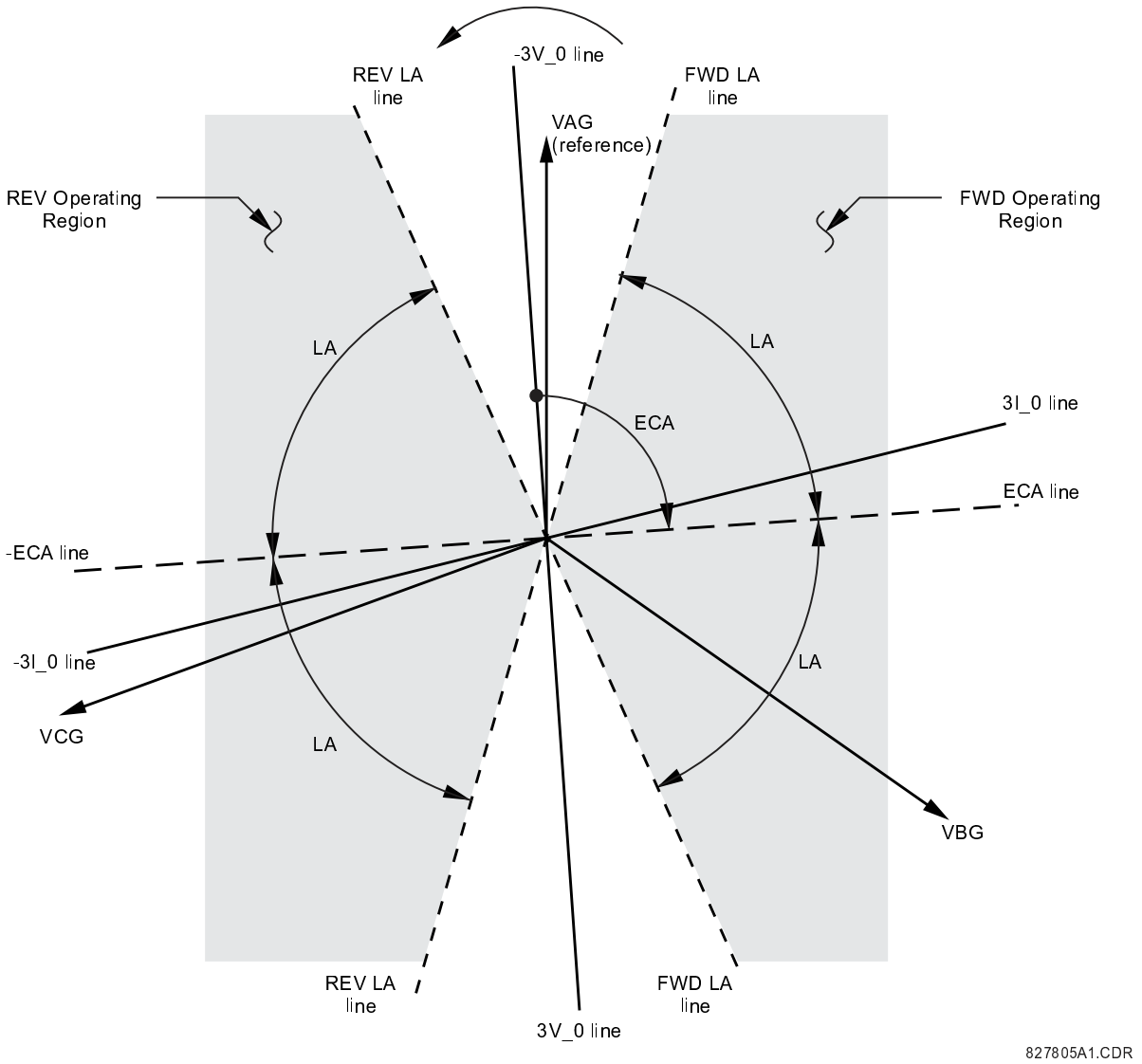

Figure 154: Neutral Directional Voltage-polarized Characteristics

> *Note:*
> *For 850 Dual Feeder Applications: For Signal Input of CT Bank 1 – J1 >> VT Bank 1 -J2 is considered as Polarizing voltage source. And, For CT Bank 2 – K1 >> VT Bank 2 – K2 is considered as Polarizing Voltage Source*

Path: ***Setpoints*** > ***Protection*** > ***Group 1(6)*** > ***Current*** > ***Neutral Directional OC 1(X)***

FUNCTION

Range: Disabled, Enabled

Default: Disabled

SIGNAL INPUT

Range: dependent upon the order code

Default: CT Bank 1-J1

This setting provides the CT Bank input. The default bank names can be changed in: ***Setpoints > System > Current Sensing > [Name] > CT Bank Name***.

POLARIZING MODE

Range: Voltage, Current, Dual

Default: Voltage

This setting selects the polarizing mode for the directional unit.

If `Voltage` polarizing mode is selected, the element uses the zero-sequence voltage angle for polarization. Select either the zero-sequence voltage V0, calculated from the phase voltages, or the zero-sequence voltage supplied externally as the auxiliary voltage V_X. The calculated V0 can be used as polarizing voltage only if the voltage transformers are connected in Wye. The auxiliary voltage can be used as the polarizing voltage if the auxiliary voltage is connected to a zero-sequence voltage source (such as the open delta connected secondary of VTs). The zero-sequence (V0) or auxiliary voltage (V_X), accordingly, must be greater than 0.02 x VT to be validated for use as a polarizing signal. If the polarizing signal is invalid, neither forward nor reverse indication is given.

If `Current` polarizing mode is selected, the element uses the angle of the ground current measured on the ground current input. The ground CT must be connected between the ground and neutral point of an adequate source of ground current. The ground current must be greater than 0.05 x CT to be validated as a polarizing signal. If the polarizing signal is not valid, neither forward nor reverse indication is given. For a choice of current polarizing, it is recommended that the polarizing signal be analyzed to ensure that a known direction is maintained irrespective of the fault location. For example, if using an autotransformer neutral current as a polarizing source, it should be ensured that a reversal of the ground current does not occur for a high-side fault. The low-side system impedance should be assumed minimal when checking for this condition. A similar situation arises for a wye/delta/wye transformer, where current in one transformer winding neutral may reverse when faults on both sides of the transformer are considered.

If `Dual` polarizing mode is selected, the element performs both directional comparisons as described above. A given direction is confirmed if either voltage or current comparators indicate so. If a conflicting (simultaneous forward and reverse) indication occurs, the forward direction overrides the reverse direction.

POLARIZING VOLTAGE

Range: Calculated V0, Measured VX(VN)

Default: Calculated V0

Selects the polarizing voltage used by the directional unit when `Voltage` or `Dual` polarizing mode is set. The polarizing voltage can be programmed to be either the zero-sequence voltage calculated from the phase voltages (`Calculated V0`) or supplied externally as an auxiliary voltage (`Measured VX(VN)`)

POLARIZING VOL SUPV

Range: 0.005 to 0.400 x VT in steps of 0.005 x VT

Default: 0.020 x VT

The zero-sequence or auxiliary voltage must be greater than the polarizing supervision voltage configured in this setting, to be validated for use as a polarizing signal. If the polarizing signal is invalid, neither forward nor reverse indication is given.

POS SEQ RESTRAINT

Range: 0.000 to 0.500 in steps of 0.001

Default: 0.063

This setting controls the amount of the positive-sequence restraint. Set to zero to remove the restraint. Set higher if large system unbalances or poor CT performance are expected.

FORWARD ECA

Range: –180° to 180° in steps of 1°

Default: 75°

This setting defines the element characteristic angle (ECA) for the forward direction in “Voltage” polarizing mode. “Current” polarizing mode uses a fixed ECA of 0°. The ECA in the reverse direction is the angle set for the forward direction shifted by 180°.

FORWARD LIMIT ANGLE

Range: 40° to 90° in steps of 1°

Default: 90°

This setting defines a symmetrical (in both directions from the ECA) limit angle for the forward direction.

FORWARD PICKUP

Range: 0.010 to 30.000 x CT in steps of 0.001 x CT

Default: 0.050 x CT

This setting defines the Pickup level for the overcurrent unit of the element in the forward direction. When selecting this setting it must be kept in mind that the design uses a ‘positive-sequence restraint’ technique for the `Calculated 3I0` mode of operation.

REVERSE LIMIT ANGLE

Range: 40° to 90° in steps of 1°

Default: 90°

This setting defines a symmetrical (in both directions from the ECA) limit angle for the reverse direction.

REVERSE PICKUP

Range: 0.010 to 30.000 x CT in steps of 0.001 x CT

Default: 0.050 x CT

This setting defines the Pickup level for the overcurrent unit of the element in the reverse direction. When selecting this setting it must be kept in mind that the design uses a ‘positive-sequence restraint’ technique for the `Calculated 3I0` mode of operation.

BLOCK

Range: Off, Any FlexLogic operand

Default: Off

EVENTS

Range: Enabled, Disabled

Default: Enabled

TARGETS

Range: Self-reset, Latched, Disabled

Default: Self-reset

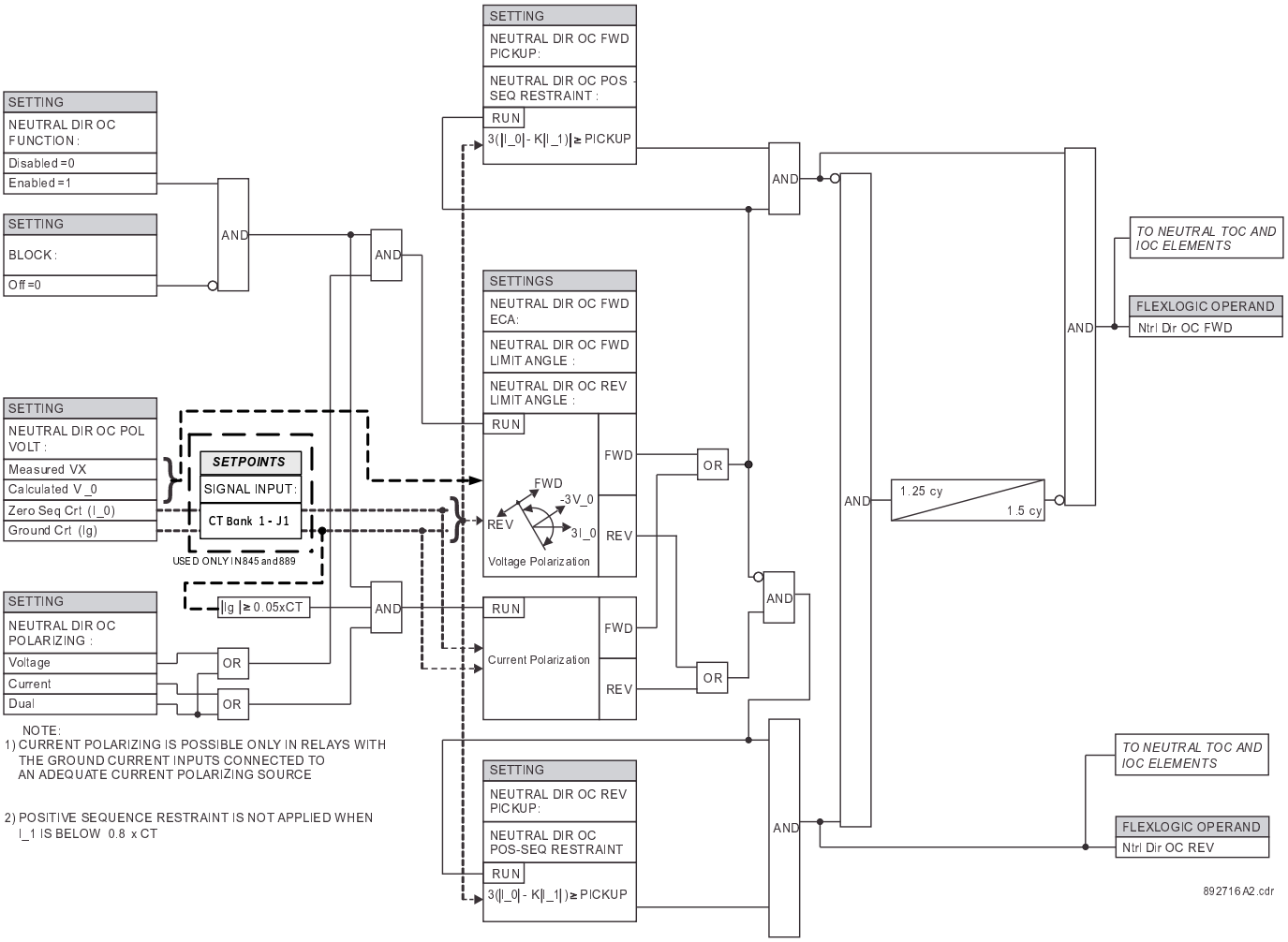

Figure 155: Neutral Directional Overcurrent Protection logic diagram

9.2.1.8 GROUND TIME OVERCURRENT PROTECTION (51G)

The settings of Ground Time Overcurrent protection element are applied to the ground input current to produce *Trip* or *Pickup* flags. The Ground TOC Pickup flag is asserted when the ground current is above the PKP value. The Ground TOC Trip flag is asserted if the element stays picked up for the time defined by the selected inverse curve and the magnitude of the current. The element drops from Pickup without operation if the measured current drops below 97 to 98% of the Pickup value before the time for operation is reached. When Definite Time is selected, the time for Ground TOC operation is defined only by the ***TDM*** setting.

Path: ***Setpoints*** > ***Protection*** > ***Group 1(6)*** > ***Current*** > ***Ground TOC 1(X)***

FUNCTION

Range: Disabled, Trip, Latched Trip, Alarm, Latched Alarm, Configurable

Default: Disabled

SIGNAL INPUT

Range: dependent upon the order code

Default: CT Bank 1-J1

This setting provides the CT Bank input. The default bank names can be changed in: ***Setpoints > System > Current Sensing > [Name] > CT Bank Name***.

INPUT

Range: Phasor, RMS

Default: Phasor

This selection defines the method of processing of the current signal. It could be Root Mean Square (RMS) or Fundamental Phasor Magnitude.

PICKUP

Range: 0.010 to 30.000 x CT in steps of 0.001 x CT

Default: 0.200 x CT

CURVE

Range: Range: Definite Time, IEC Curve A, IEC Curve B, IEC Curve C, IEC Short Inverse ,Long Time Inverse, Rectifier, SI(1.3s), BPN EDF, IEEE Mod Inverse, IEEE Very Inverse, IEEE Extr. Inverse, US Inverse, US ST Inverse, ANSI Extr. Inverse, ANSI Very Inverse, ANSI Norm Inverse, ANSI Mod Inverse, IAC Extr. Inverse, IAC Very Inverse, IAC Inverse, IAC Short Inverse, I^2t, I^4t, Rapid Inverse, IDG, EPATR B, FlexCurve A, FlexCurve B, FlexCurve C, FlexCurve D.

Default: IEEE, Moderately Inverse

TDM

Range: 0.05 to 600.00 in steps of 0.01

Default: 1.00

This is the Time Multiplier Setting to adjust the operate time of IEC Curve A/B/C, IEEE M/V/E Inverse, US Inverse, US Short Time, ANSI E/V/N/M Inverse, IAC E/V/N/S Inverse, I2T and I4T curves.

TMS

Range: 0.025 to 1.200 in steps of 0.005

Default: 1.000

This is the Time Multiplier Setting to adjust the operate time of IEC Short Inverse, Long Time Inverse, Rectifier, Standard Inverse SI(1.3s), BPN EDF and EPATR B curves.

K (RI)

Range: 0.10 to 10.00 Step: 0.05

Default: 1.00

This setting defines the Time multiplier constant to adjust the operate time of the Rapid Inverse (RI) curve.

This setting can be made visible from setting management, only when ***Curve*** setting is selected as `Rapid Inverse`.

IDG Is

Range: 1.0 to 4.0 in steps of 0.1

Default: 1.5

This setting is set as a multiple of the ground fault overcurrent setting for the IDG curve.

It determines the actual current threshold at which the element starts.

This setting can be made visible from setting management, only when the ***Curve*** setting is selected as `IDG`.

IDG TIME

Range: 1.00 to 2.00 s in steps of 0.01 s

Default: 1.20

This setting sets the minimum operate time at high levels of fault current for IDG curves.

This setting can be made visible from setting management, only when the ***Curve*** setting is selected as `IDG`.

TIME DELAY

Range: 0.000 s to 1200.000 s in steps of 0.001 s

Default: 1.000

This setting defines the time delay for operation.

This setting can be made visible from setting management, only when the ***Curve*** setting is selected as `DT` (Definite Time).

DT ADDER

Range: 0.00 to 100.00 s in steps of 0.01 s

Default: 0.00

This setting adds an additional fixed time delay to the IDMT Operate characteristic.

This setting will be visible for when any IDMT curves are selected under the ***Curve*** setting.

RESET

Range: DT, Inverse

Default: DT

This setting sets a Definite Time (DT) or Inverse reset time.

If Definite Time (`DT`) reset is selected, the Neutral TOC element will reset after a time delay provided by the ***Reset Time*** setting. If `Inverse` reset is selected, the time to reset is calculated based on the reset equation for the selected inverse curve.

When using Long Time Inverse, BPN EDF, Rectifier, IEC Short Inverse, Rapid Inverse, IDG, EPATR B curves the reset is always definite time defined by the setpoint ***Reset Time***.

RESET TIME

Range: 0.000 to 100.000 s in stepos of 0.001 s

Default: 0.000s

This setting determines the Reset time for the Definite Time Reset characteristic.

This can be made visible from setting management when the ***Reset*** setting is selected as `DT` or when using Long Time Inverse, IEC Short Inverse, BPN EDF, Rectifier, IDG, EPATR B and Rapid Inverse curves.

DIRECTION

Range: Disabled, Forward, Reverse

Default: Disabled

BLOCK

Range: Off, Any FlexLogic operand

Default: Off or PB 4 OFF (GND TRIP ENABLED), Dependent on order code

OUTPUT RELAY X

Range: Operate, Do Not Operate

Default: Do Not Operate

EVENTS

Range: Enabled, Disabled

Default: Enabled

TARGETS

Range: Self-reset, Latched, Disabled

Default: Self-reset

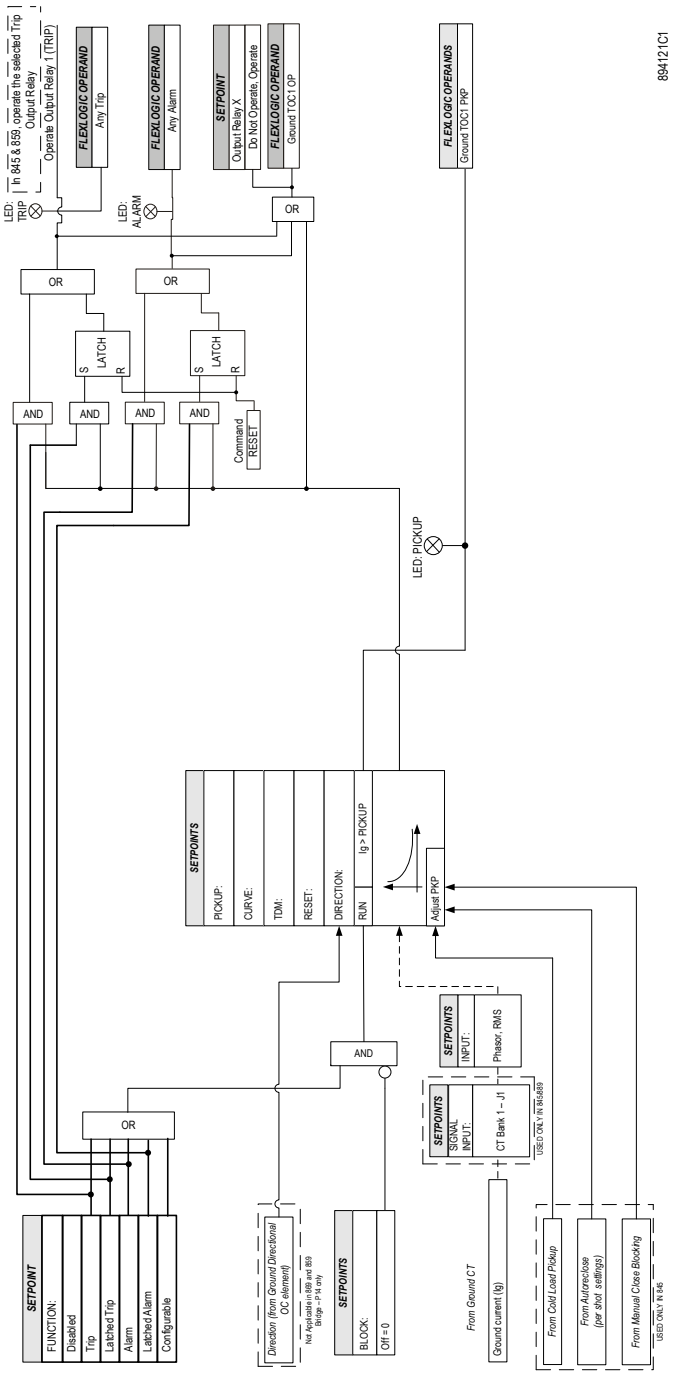

Figure 156: Ground Time Overcurrent Protection logic diagram

9.2.1.9 GROUND INSTANTANEOUS OVERCURRENT PROTECTION (50G)

The settings of the Ground Instantaneous Overcurrent protection element are applied to the measured Ground current for producing *Pickup* and *Trip* flags. The Ground IOC Pickup flag is asserted when the Ground current is above the pickup value. The Ground IOC Operate flag is asserted if the element stays picked-up for the time defined by the Ground IOC ***PICKUP DELAY*** setting. If the The Pickup time delay is set to 0.000 seconds. The Pickup and Operate flags will be asserted at the same time. The element drops from Pickup without operation if the Ground current drops below 97 to 98% of the Pickup value.

Path: ***Setpoints*** > ***Protection*** > ***Group 1(6)*** > ***Current*** > ***Ground IOC 1(X)***

FUNCTION

Range: Disabled, Trip, Alarm, Latched Alarm, Configurable

Note: Relays with firmware version 4 and later have a `Latched Trip` *option*

Default: Disabled

SIGNAL INPUT

Range: dependent upon the order code

Default: CT Bank 1-J1

This setting provides the CT Bank input. The default bank names can be changed in: ***Setpoints > System > Current Sensing > [Name] > CT Bank Name***.

PICKUP

Range (up to FW 3.xx): 0.050 to 30.000 x CT in steps of 0.001 x CT

Range (from FW 4.10): 0.010 to 30.000 x CT in steps of 0.001 x CT

Default (up to FW 3.xx): 1.00 x CT

Default (from FW 4.10): 0.200 x CT

DIRECTION (not used in 859)

Range: Disabled, Forward, Reverse

Default: Disabled

PICKUP DELAY

Range: 0.000 to 6000.000 s in steps of 0.001 s

Default: 0.000 s

DROPOUT DELAY

Range: 0.000 to 6000.000 s in steps of 0.001 s

Default: 0.000 s

BLOCK

Range: Off, Any FlexLogic operand

Default: Off

OUTPUT RELAY X

Range: Operate, Do Not Operate

Default: Do Not Operate

EVENTS

Range: Enabled, Disabled

Default: Enabled

TARGETS

Range: Self-reset, Latched, Disabled

Default: Self-reset

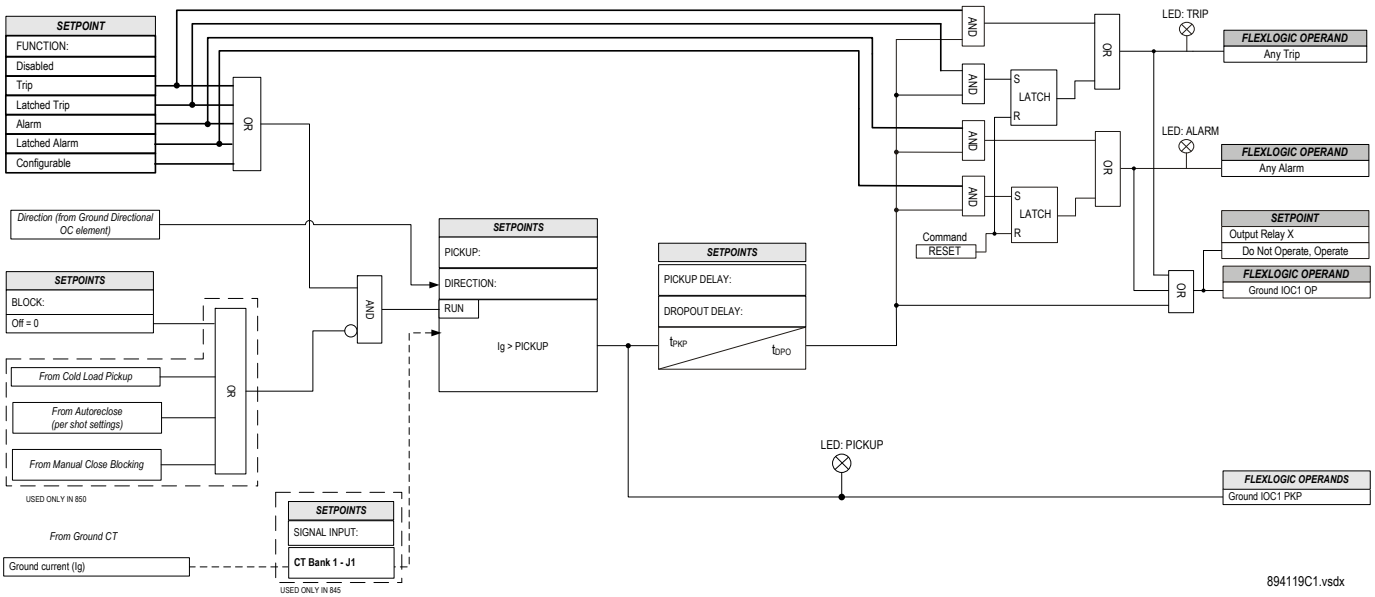

Figure 157: Ground Instantaneous Overcurrent Protection logic diagram

9.2.1.10 GROUND DIRECTIONAL OVERCURRENT PROTECTION (67G)

The Ground Directional Overcurrent protection element provides both forward and reverse fault direction indications shown by the operands Gnd Dir OC FWD and Gnd Dir OC REV respectively. The output operands are asserted if the magnitude of the operating current is above a Pickup level (overcurrent unit) and the fault direction is seen as forward or reverse, respectively (directional unit).

The *overcurrent unit* responds to the magnitude of a fundamental frequency phasor of the ground current. There are separate Pickup settings for the forward-looking and reverse-looking functions.

The *directional unit* uses the ground current (Ig) for fault direction discrimination, and can be polarizing, by either `Calculated V0` zero-sequence voltage or `Measured VX` zero sequence voltage. The following tables define the ground directional overcurrent element.

Directional Unit				Overcurrent unit
Polarizing mode	**Direction**	**Compared phasors**		
Voltage	Forward	-V0	Ig	GROUND CURRENT (Ig)
Voltage	Reverse	-V0	-Ig	GROUND CURRENT (Ig)
Current	Forward	Ipol	Ig	GROUND CURRENT (Ig)
Current	Reverse	Ipol	-Ig	GROUND CURRENT (Ig)
Dual	Forward	-V0	Ig	GROUND CURRENT (Ig)
Dual	Forward	Ipol	Ig	GROUND CURRENT (Ig)
Dual	Reverse	-V0	-Ig	GROUND CURRENT (Ig)
Dual	Reverse	Ipol	-Ig	GROUND CURRENT (Ig)

Where:

V0 = 1/3 * (Vag + Vbg + Vcg) = zero sequence voltage

When ***POLARIZING VOLTAGE*** is set to `Measured VX`, one-third of this voltage is used in place of V0. The following figure explains the usage of the voltage polarized directional unit of the element by showing the voltage-polarized phase angle comparator characteristics for a phase A to ground fault, with:

- ECA = 90° (element characteristic angle = centerline of operating characteristic)
- FWD LA = 80° (forward limit angle = the ± angular limit with the ECA for operation)
- REV LA = 80° (reverse limit angle = the ± angular limit with the ECA for operation).

The element incorporates a current reversal logic: if the reverse direction is indicated for at least 1.25 of a power system cycle, the prospective forward indication will be delayed by 1.5 of a power system cycle. The element is designed to emulate an electromechanical directional device. Larger operating and polarizing signals will result in faster directional discrimination bringing more security to element operation.

The forward-looking function is designed to be more secure as compared to the reverse-looking function, and should therefore be used for the tripping direction. The reverse-looking function is designed to be faster as compared to the forward-looking function and should be used for the blocking direction. This allows better protection coordination.

The above bias should be taken into account when using the Ground Directional Overcurrent element to directionalize other protection elements.

For Dual Feeder Applications, for Signal Input of CT Bank 1 – J1 >> VT Bank 1 -J2 is considered as Polarizing voltage source. And, For CT Bank 2 – K1 >> VT Bank 2 – K2 is considered as Polarizing Voltage Source.

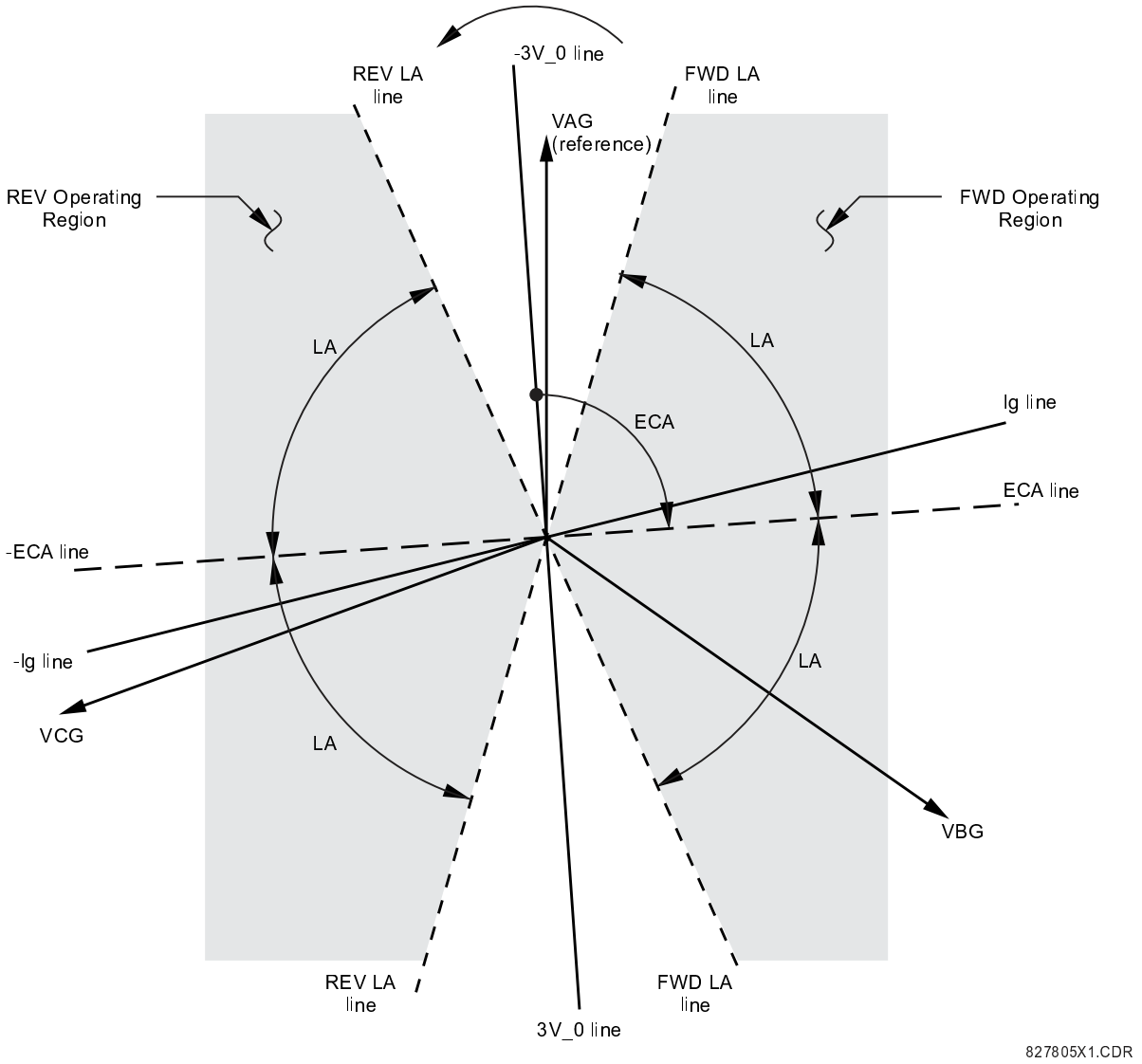

Figure 158: Ground Directional Voltage-polarized Characteristics

9.2.1.10.1 GDOC SETPOINTS

Path: ***Setpoints*** > ***Protection*** > ***Group 1(6)*** > ***Current*** > ***Ground Directional OC 1(X)***

FUNCTION

Range: Disabled, Enabled

Default: Disabled

SIGNAL INPUT

Range: dependent upon the order code

Default: CT Bank 1-J1

This setting provides the selection for the current input bank. The default bank names can be changed in: Setpoints > System > Current Sensing > [Name] > CT Bank Name.

POLARIZING MODE

Range: Voltage, Current, Dual

Default: Voltage

This setting selects the polarizing mode for the directional unit.

If Voltage polarizing mode is selected, the element uses the zero-sequence voltage angle for polarization. Select either the zero-sequence voltage V0, calculated from the phase voltages, or the zero-sequence voltage supplied externally as the auxiliary voltage V_X. The calculated V0 can be used as polarizing voltage only if the voltage transformers are connected in Wye. The auxiliary voltage can be used as the polarizing voltage if the auxiliary voltage is connected to a zero-sequence voltage source (such as the open delta connected secondary of VTs). The zero-sequence (V0) or auxiliary voltage (Vx), accordingly, must be greater than the voltage set under `Polarizing Volt Supv` to be validated for use as a polarizing signal. If the polarizing signal is invalid, neither forward nor reverse indication is given.

If Current polarizing mode is selected, the element uses the angle of the polarizing current measured on the ground current input K1-CT (if available). The polarizing current must be greater than 0.05 x CT to be validated as a polarizing signal. If the polarizing signal is not valid, neither forward nor reverse indication is given. For a choice of current polarizing, it is recommended that the polarizing signal be analyzed to ensure that a known direction is maintained irrespective of the fault location.

If Dual polarizing mode is selected, the element performs both directional comparisons as described above. A given direction is confirmed if either voltage or current comparators indicate so. If a conflicting (simultaneous forward and reverse) indication occurs, the forward direction overrides the reverse direction.

POLARIZING VOLTAGE

Range: Calculated V0, Measured VX

Default: Calculated V0

Selects the polarizing voltage used by the directional unit when "Voltage" or "Dual" polarizing mode is set. The polarizing voltage can be programmed to be either the zero-sequence voltage calculated from the phase voltages ("Calculated V0") or supplied externally as an auxiliary voltage ("Measured VX")

POLARIZING VOL SUPV

Range: 0.005 to 0.100 x VT in steps of 0.005 x VT

Default: 0.020 x VT

The zero-sequence (V0) or auxiliary voltage (Vx), accordingly, must be greater than the Polarizing supervision voltage configured in this setting, to be validated for use as a polarizing signal. If the polarizing signal is invalid, neither forward nor reverse indication is given.

FORWARD ECA

Range: –90° to 90° in steps of 1°

Default: 75°

This setting defines the element characteristic angle (ECA) for the forward direction in "Voltage" polarizing mode. "Current" polarizing mode uses a fixed ECA of 0°. The ECA in the reverse direction is the angle set for the forward direction shifted by 180°.

FORWARD LIMIT ANGLE

Range: 40° to 90° in steps of 1°

Default: 90°

This setting defines a symmetrical (in both directions from the ECA) limit angle for the forward direction.

FORWARD PICKUP

Range: 0.050 to 30.000 x CT in steps of 0.001 x CT

Default: 0.050 x CT

This setting defines the Pickup level for the overcurrent unit of the element in the forward direction.

REVERSE LIMIT ANGLE

Range: 40° to 90° in steps of 1°

Default: 90°

This setting defines a symmetrical (in both directions from the ECA) limit angle for the reverse direction.

REVERSE PICKUP

Range: 0.050 to 30.000 x CT in steps of 0.001 x CT

Default: 0.050 x CT

This setting defines the Pickup level for the overcurrent unit of the element in the reverse direction.

BLOCK

Range: Off, Any FlexLogic operand

Default: Off

EVENTS

Range: Enabled, Disabled

Default: Enabled

TARGETS

Range: Self-reset, Latched, Disabled

Default: Self-reset

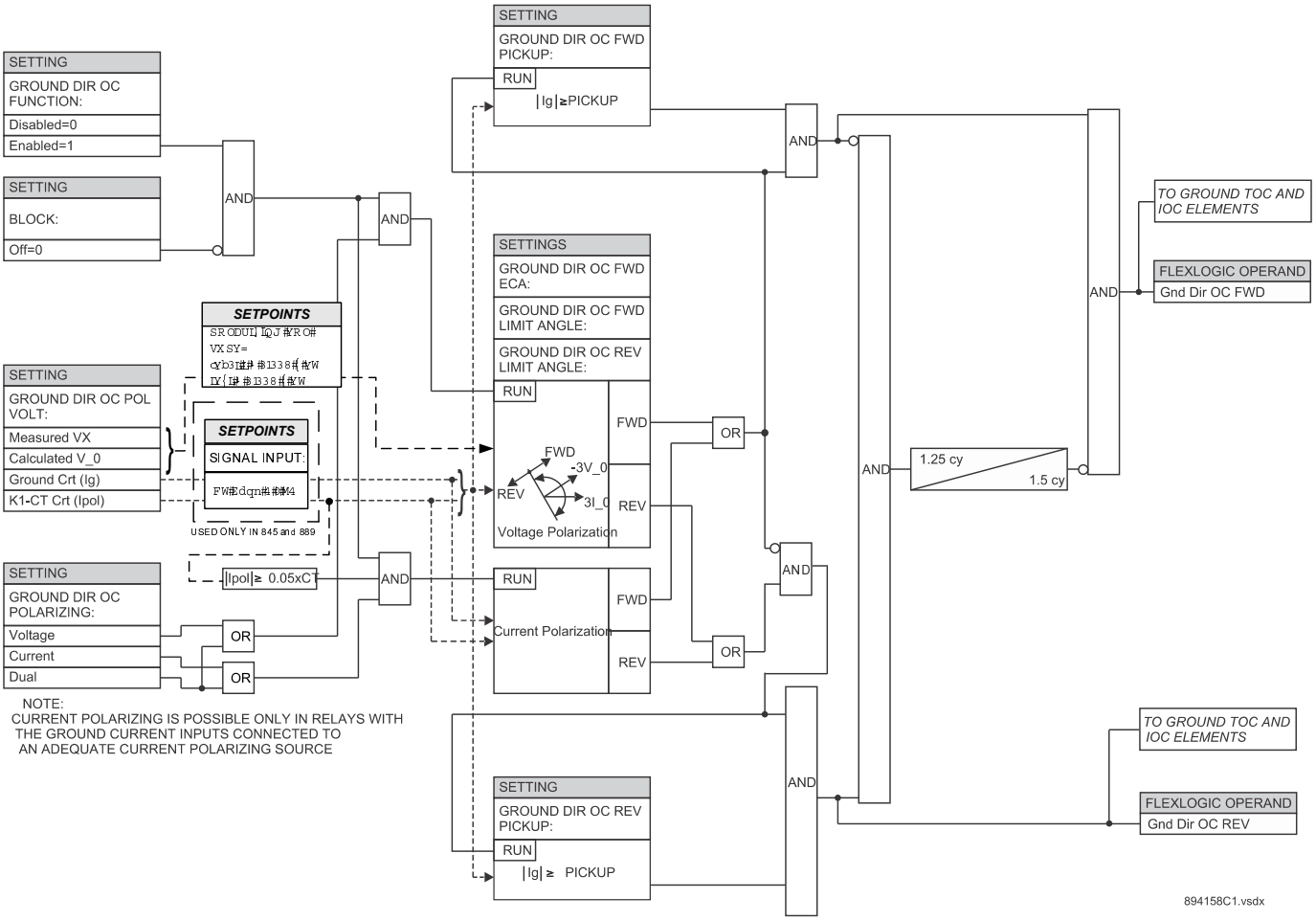

Figure 159: Ground Directional Overcurrent Protection logic diagram

9.2.1.10.2 GDOC SETPOINTS

Path: ***Setpoints*** > ***Protection*** > ***Group 1(6)*** > ***Current*** > ***Ground Directional OC 1(X)***

FUNCTION

Range: Disabled, Enabled

Default: Disabled

SIGNAL INPUT

Range: dependent upon the order code

Default: CT Bank 1-J1

This setting provides the selection for the current input bank. The default bank names can be changed in: Setpoints > System > Current Sensing > [Name] > CT Bank Name.

POLARIZING MODE

Range: Voltage, Current, Dual

Default: Voltage

This setting selects the polarizing mode for the directional unit.

- If Voltage polarizing mode is selected, the element uses the zero-sequence voltage angle for polarization. Select either the zero-sequence voltage V0, calculated from the phase voltages, or the zero-sequence voltage supplied externally as the auxiliary voltage V_X. The calculated V0 can be used as polarizing voltage only if the voltage transformers are connected in Wye. The auxiliary voltage can be used as the polarizing voltage if the auxiliary voltage is connected to a zero-sequence voltage source (such as the open delta connected secondary of VTs). The zero-sequence (V0) or auxiliary voltage (Vx), accordingly, must be greater than the voltage set under `Polarizing Volt Supv` to be validated for use as a polarizing signal. If the polarizing signal is invalid, neither forward nor reverse indication is given.
- If Current polarizing mode is selected, the element uses the angle of the polarizing current measured on the ground current input K1-CT (if available). The polarizing current must be greater than 0.05 x CT to be validated as a polarizing signal. If the polarizing signal is not valid, neither forward nor reverse indication is given. For a choice of current polarizing, it is recommended that the polarizing signal be analyzed to ensure that a known direction is maintained irrespective of the fault location.
- If Dual polarizing mode is selected, the element performs both directional comparisons as described above. A given direction is confirmed if either voltage or current comparators indicate so. If a conflicting (simultaneous forward and reverse) indication occurs, the forward direction overrides the reverse direction.

POLARIZING VOLTAGE

Range: Calculated V0, Measured VX

Default: Calculated V0

Selects the polarizing voltage used by the directional unit when "Voltage" or "Dual" polarizing mode is set. The polarizing voltage can be programmed to be either the zero-sequence voltage calculated from the phase voltages ("Calculated V0") or supplied externally as an auxiliary voltage ("Measured VX")

POLARIZING VOL SUPV

Range: 0.005 to 0.100 x VT in steps of 0.005 x VT

Default: 0.020 x VT

The zero-sequence (V0) or auxiliary voltage (Vx), accordingly, must be greater than the Polarizing supervision voltage configured in this setting, to be validated for use as a polarizing signal. If the polarizing signal is invalid, neither forward nor reverse indication is given.

FORWARD ECA

Range: –90° to 90° in steps of 1°

Default: 75°

This setting defines the element characteristic angle (ECA) for the forward direction in "Voltage" polarizing mode. "Current" polarizing mode uses a fixed ECA of 0°. The ECA in the reverse direction is the angle set for the forward direction shifted by 180°.

FORWARD LIMIT ANGLE

Range: 40° to 90° in steps of 1°

Default: 90°

This setting defines a symmetrical (in both directions from the ECA) limit angle for the forward direction.

FORWARD PICKUP

Range: 0.050 to 30.000 x CT in steps of 0.001 x CT

Default: 0.050 x CT

This setting defines the Pickup level for the overcurrent unit of the element in the forward direction.

REVERSE LIMIT ANGLE

Range: 40° to 90° in steps of 1°

Default: 90°

This setting defines a symmetrical (in both directions from the ECA) limit angle for the reverse direction.

REVERSE PICKUP

Range: 0.050 to 30.000 x CT in steps of 0.001 x CT

Default: 0.050 x CT

This setting defines the Pickup level for the overcurrent unit of the element in the reverse direction.

BLOCK

Range: Off, Any FlexLogic operand

Default: Off

EVENTS

Range: Enabled, Disabled

Default: Enabled

TARGETS

Range: Self-reset, Latched, Disabled

Default: Self-reset

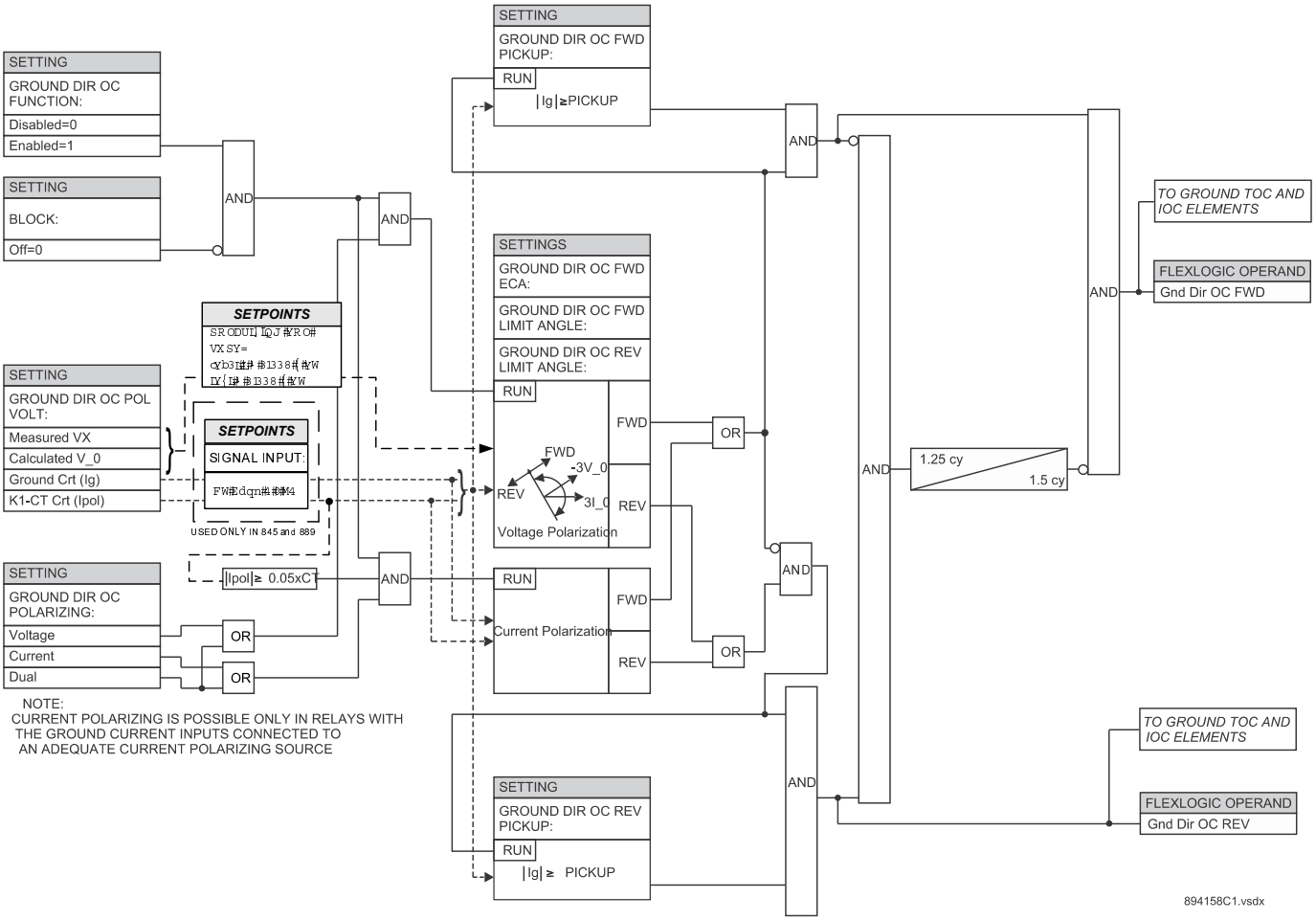

Figure 160: Ground Directional Overcurrent Protection logic diagram

9.2.1.11 SENSITIVE GROUND TIME OVERCURRENT PROTECTION (51SG)

The settings of the Sensitive Ground Time Overcurrent protection element are applied to the Sensitive Ground input current to produce *Trip* or *Pickup* flags. The Sensitive Ground TOC Pickup flag is asserted when the Sensitive Ground current is above the PKP value. The Sensitive Ground TOC Trip flag is asserted if the element stays picked up for the time defined by the selected inverse curve and the magnitude of the current. The element drops from Pickup without operation if the measured current drops below 97-98% of the Pickup value before the time for operation is reached. When Definite Time is selected, the time for Sensitive Ground TOC operation is defined only by the ***TDM*** setting.

Path: ***Setpoints*** > ***Protection*** > ***Group 1(6)*** > ***Current*** > ***Sensitive Ground TOC 1(X)***

FUNCTION

Range: Disabled, Trip, Latched Trip, Alarm, Latched Alarm, Configurable

Default: Disabled

INPUT

Range: Phasor, RMS

Default: Phasor

This selection defines the method of processing of the current signal. It can be Root Mean Square (RMS) or Fundamental Phasor Magnitude.

PICKUP

Range: 0.50 to 15.00 A in steps of 0.01 A

Default: 10.00 A

This setting sets the sensitive ground overcurrent pickup level.

In the case of 50:0.025 Ground input, the pickup level is specified as Ampere in primary. For example, with a PKP setting of 10.00 A, when ground current (primary) is 10.00A, the ground input will measure 10.000 A, and this function should pick up.

CURVE

Range: Definite Time, IEC Curve A, IEC Curve B, IEC Curve C, IEC Short Inverse, Long Time Inverse, Rectifier,SI(1.3s), BPN EDF, IEEE Mod Inverse, IEEE Very Inverse, IEEE Extr. Inverse, US Inverse, US ST Inverse, ANSI Extr. Inverse, ANSI Very Inverse, ANSI Norm Inverse, ANSI Mod Inverse, IAC Extr. Inverse, IAC Very Inverse, IAC Inverse, IAC Short Inverse, I^2t, I^4t, Rapid Inverse, IDG, EPATR B, FlexCurve A, FlexCurve B, FlexCurve C, FlexCurve D.

Default: IEEE Mod Inverse

This setting sets the shape of the selected over-current inverse curve. If none of the standard curve shapes is appropriate, a FlexCurve can be created. Refer to the User curve and the FlexCurve setup for more details on their configurations and usage.

TDM

Range: 0.01 to 600.00 in steps of 0.01

Default: 1.00

This setting provides the selection for the Time Dial Multiplier by which the times from the inverse curve are modified. For example if an ANSI Extremely Inverse curve is selected with TDM = 2, and the fault current is 5 times bigger than the PKP level, the operation of the element will occur but not before 2.59s of time has elapsed from pickup.

TMS

Range: 0.025 to 1.200 in steps of 0.005

Default: 1.00

This is the Time Multiplier Setting to adjust the operate time of IEC Short Inverse, Long Time Inverse, Rectifier, Standard Inverse SI(1.3s), BPN EDF and EPATR B curves.

K (RI)

Range: 0.10 to 10.00 in steps of 0.05

Default: 1.00

This setting defines the Time multiplier constant to adjust the operate time of the Rapid Inverse (RI) curve.

This k(RI) setting can be made visible from setting management, only when the ***Curve*** setting is selected as `Rapid Inverse`.

IDG Is

Range: 1.0 to 4.0 in steps of 0.1

Default: 1.5

This setting is set as a multiple of the Ground Fault overcurrent setting IDG Is for the IDG curve.

It determines the actual current threshold at which the element starts.

IDG TIME

Range: 1.00 to 2.00 s in steps of 0.01 s

Default: 1.20

This setting sets the minimum operate time at high levels of fault current for IDG curves.

IDG Is and *IDG Time* settings can be made visible from setting management, only when the ***Curve*** setting is selected as `IDG`.

TIME DELAY

Range: 0.000 s to 200.000 s in steps of 0.001 s

Default: 1.000

This setting defines the time delay for operation. This Time Delay setting can be made visible from setting management, only when the ***Curve*** setting is selected as DT.

DT ADDER

Range: 0.00 to 100.00 s in steps of 0.01 s

Default: 0.00

This setting adds an additional fixed time delay to the ***IDMT Operate*** characteristic.The ***DT Adder*** setting will be visible for when any IDMT curves are selected under the ***Curve*** setting.

RESET

Range: DT, Inverse

Default: DT

Selection of a Definite Time (DT) or Inverse reset time is provided using this setting.

If Definite Time (DT) reset is selected, the Phase TOC element will reset after a time delay provided by the ***Reset Time*** setting. If Inverse reset is selected, the time to reset is calculated based on the reset equation for the selected inverse curve.

Note: When using IEC Short Inverse, Long Time Inverse, BPN EDF, Rectifier, Rapid Inverse curves for the Operate characteristic, Definite Time is used by default as Reset characteristic.

RESET TIME

Range: 0.000 to 100.000 in steps of 0.001

Default: 0.000

This setting provides selection for dropout time delay used to delay the dropout of the detection of the overcurrent condition.

This can be made visible from setting management when the ***Reset*** setting is selected as DT or when using Long Time Inverse, IEC Short Inverse, BPN EDF, Rectifier, IDG, EPATR B and Rapid Inverse curves.

DIRECTION

Range: Disabled, Forward, Reverse

Default: Disabled

This setting defines the operation direction of the Sensitive Ground TOC element. Entering the direction for the Sensitive Ground TOC element does not automatically apply the selection. The direction detection is performed by the element Sensitive Ground Directional OC, which must be enabled and configured according to the directionality criteria of the feeder currents.

BLOCK

Range: Off, Any FlexLogic operand

Default: Off

The Sensitive Ground TOC is blocked, when the selected operand is asserted.

OUTPUT RELAY X

Range: Operate, Do Not Operate

Default: Do Not Operate

EVENTS

Range: Enabled, Disabled

Default: Enabled

This also sets the events of Sensitive Ground TOC function.

TARGETS

Range: Self-reset, Latched, Disabled

Default: Self-reset

The selection of Self-reset or Latched settings enables the targets of the Sensitive Ground TOC function.

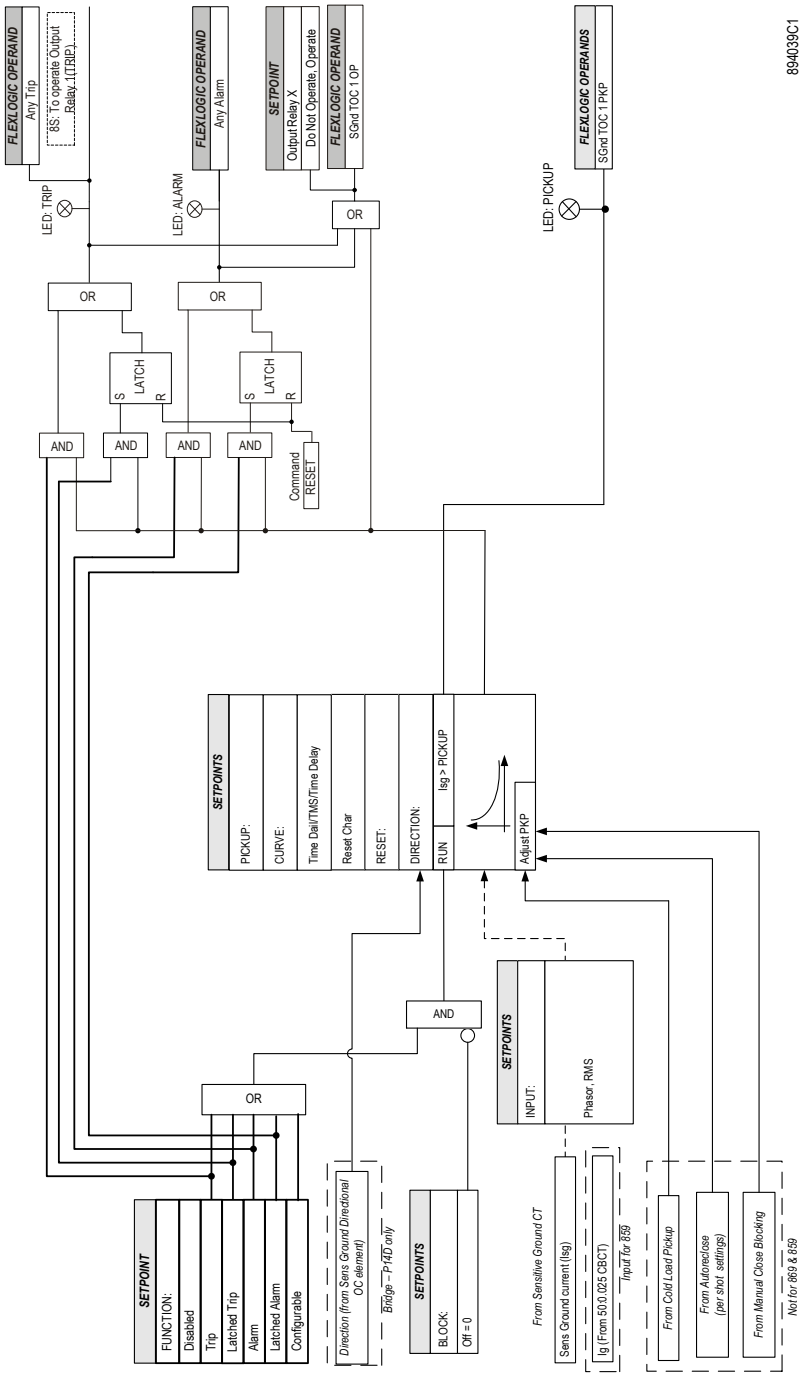

Figure 161: Sensitive Ground Time Overcurrent Protection logic diagram

9.2.1.12 SENSITIVE GROUND INSTANTANEOUS OVERCURRENT PROTECTION (50SG)

The settings of the Sensitive Ground Instantaneous Overcurrent protection element are applied to the measured Sensitive Ground current for producing *Pickup* and *Trip* flags. The Sensitive Ground IOC Pickup flag is asserted when the Sensitive Ground current is above the Pickup value. The Sensitive Ground IOC Operate flag is asserted if the element stays picked-up for the time defined by the Sensitive Ground IOC ***PICKUP DELAY*** setting. If the Pickup time delay is set to 0.00 seconds, the Pickup and Operate flags are asserted at the same time. The element drops from Pickup without operation if the Sensitive Ground current drops below 97 to 98% of the Pickup value.

Path: ***Setpoints*** > ***Protection*** > ***Group 1(6)*** > ***Current*** > ***Sensitive Ground IOC 1(X)***

FUNCTION

Range: Disabled, Trip, Alarm, Latched Alarm, Configurable

Note: Relays with firmware version 4 and later have a `Latched Trip` *option*

Default: Disabled

PICKUP

Range: 0.002 to 3.000 x CT in steps of 0.001 x CT

Default: 1.000 x CT

This setting sets the instantaneous Sensitive Ground overcurrent pickup level specified as a multiplier of the nominal CT current for sensitive CT input. For example, a PKP setting of 0.9 x CT with 300:5 CT translates into 270A primary current.

DIRECTION (not used in 859)

Range: Disabled, Forward, Reverse

Default: Disabled

This setting defines the operation direction of the Sensitive Ground time overcurrent element. Entering the direction for the Sensitive Ground IOC element, does not automatically apply the selection. The direction detection is performed by the element Sensitive Ground Directional OC, which must be enabled and configured according to the directionality criteria of the feeder currents.

PICKUP DELAY

Range: 0.000 to 6000.000 s in steps of 0.001 s

Default: 0.000 s

This setting provides the selection for the pickup time delay used to delay the operation of the protection.

DROPOUT DELAY

Range: 0.000 to 6000.000 s in steps of 0.001 s

Default: 0.000 s

This setting provides the selection for the dropout time delay used to delay the dropout of the detection of the overcurrent condition.

BLOCK

Range: Off, Any FlexLogic operand

Default: Off

The Sensitive Ground IOC is blocked, when the selected operand is asserted.

OUTPUT RELAY X

Range: Operate, Do Not Operate

Default: Do Not Operate

EVENTS

Range: Enabled, Disabled

Default: Enabled

TARGETS

Range: Self-reset, Latched, Disabled

Default: Self-reset

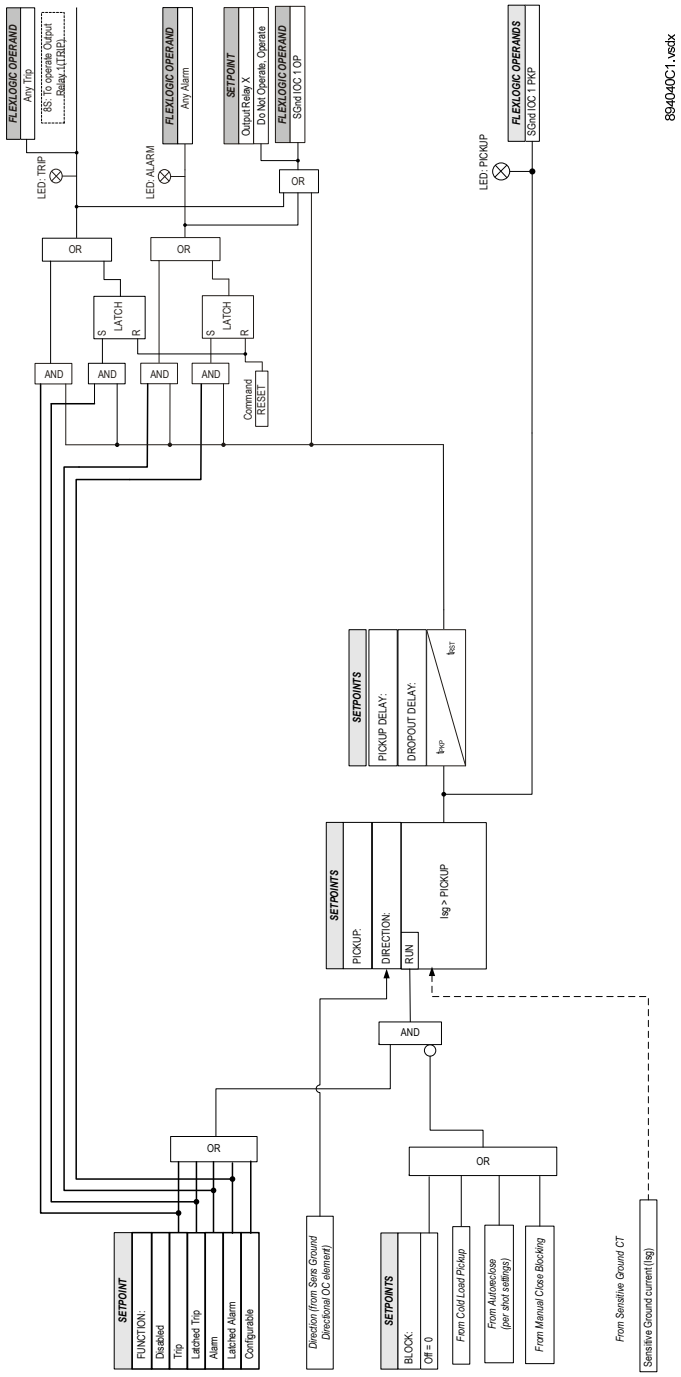

Figure 162: Sensitive Ground Instantaneous Overcurrent Protection logic diagram

9.2.1.13 SENSITIVE GROUND DIRECTIONAL OVERCURRENT PROTECTION (67SG)

The Sensitive Ground Directional Overcurrent protection element provides both forward and reverse fault direction indications shown by the operands S.Gnd Dir OC FWD and S.Gnd Dir OC REV respectively. The output operands

are asserted if the magnitude of the operating current is above a Pickup level (overcurrent unit) and the fault direction is seen as forward or reverse, respectively (directional unit).

The *overcurrent unit* responds to the magnitude of a fundamental frequency phasor of the sensitive ground current. There are separate Pickup settings for the forward-looking and reverse-looking functions.

The *directional unit* uses the sensitive ground current (Ig) for fault direction discrimination and may be programmed to use either zero-sequence voltage (`Calculated V0` or `Measured VX(VN)`), ground current (Ig), or both for polarizing. The following tables define the Sensitive Ground Directional Overcurrent element.

Directional Unit				Overcurrent unit
Polarizing mode	**Direction**	**Compared phasors**		
Voltage	Forward	-V0	Isg	GROUND CURRENT (Isg)
Voltage	Reverse	-V0	-Isg	GROUND CURRENT (Isg)
Current	Forward	Ipol	Isg	GROUND CURRENT (Isg)
Current	Reverse	Ipol	-Isg	GROUND CURRENT (Isg)
Dual	Forward	-V0	Isg	GROUND CURRENT (Isg)
Dual	Forward	Ipol	Isg	GROUND CURRENT (Isg)
Dual	Reverse	-V0	-Isg	GROUND CURRENT (Isg)
Dual	Reverse	Ipol	-Isg	GROUND CURRENT (Isg)

Where:

$$V_0 = 1/3 * (Vag + Vbg + Vcg) = \text{zero sequence voltage}$$

When POLARIZING VOLTAGE is set to “Measured VX,” one-third of this voltage is used in place of V_0. The following figure explains the usage of the voltage polarized directional unit of the element by showing the voltage-polarized phase angle comparator characteristics for a phase A to ground fault, with:

- ECA = 90° (element characteristic angle = centerline of operating characteristic)
- FWD LA = 80° (forward limit angle = the ± angular limit with the ECA for operation)
- REV LA = 80° (reverse limit angle = the ± angular limit with the ECA for operation)

The element incorporates a current reversal logic: if the reverse direction is indicated for at least 1.25 of a power system cycle, the prospective forward indication will be delayed by 1.5 of a power system cycle. The element is designed to emulate an electromechanical directional device. Larger operating and polarizing signals will result in faster directional discrimination bringing more security to element operation.

The forward-looking function is designed to be more secure as compared to the reverse-looking function, and should therefore be used for the tripping direction. The reverse-looking function is designed to be faster as compared to the forward-looking function and should be used for the blocking direction. This allows better protection coordination.

The above bias should be taken into account when using the Sensitive Ground Directional Overcurrent element to directionalize other protection elements.

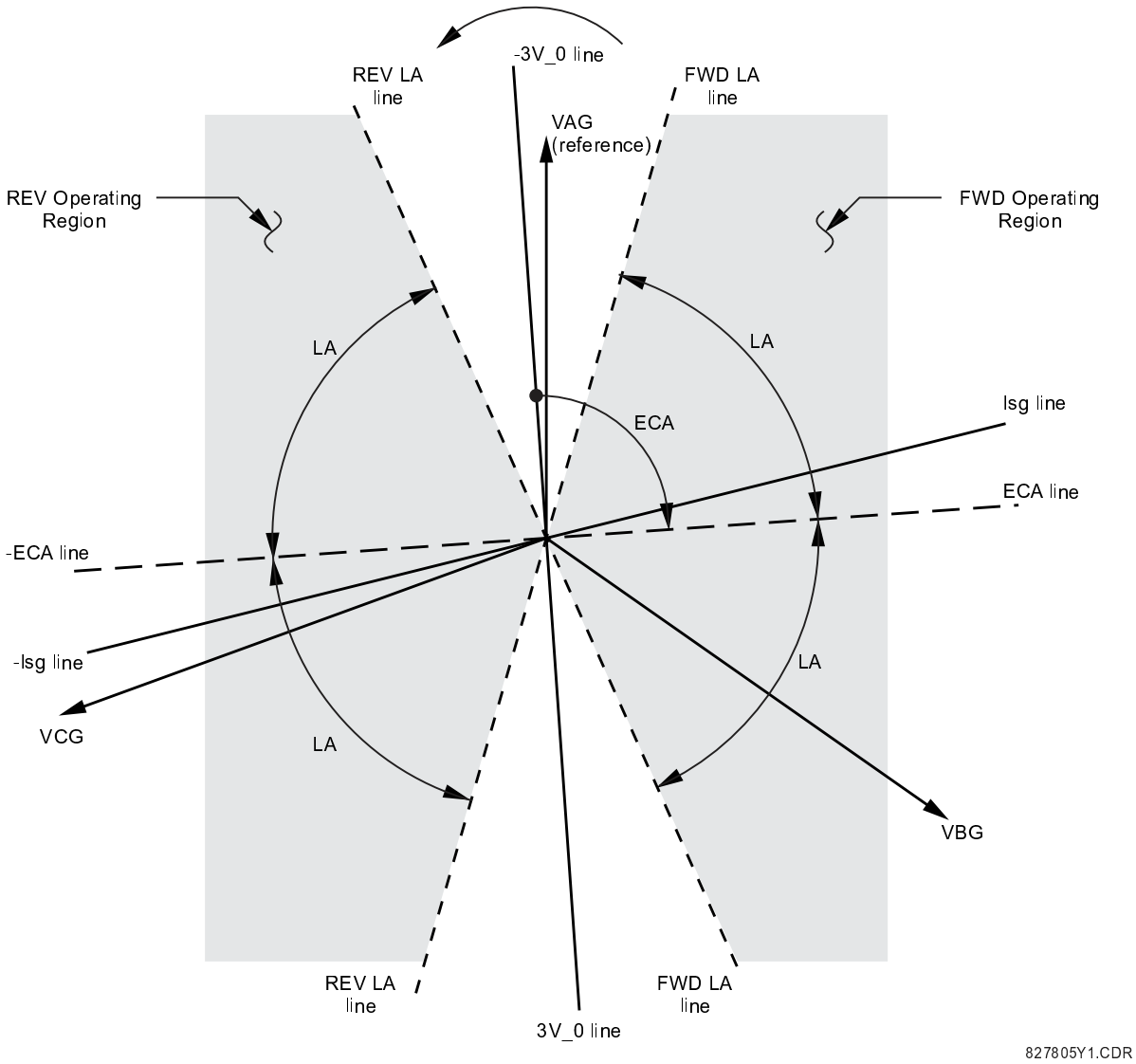

Figure 163: Sensitive Ground Directional Voltage-polarized Characteristics

For 850D dual feeder applications, when the signal input is from CT Bank 1 – J1, VT Bank 1 -J2 is used as the polarizing voltage source. Similarly, when the signal input is from CT Bank 2 – K1, VT Bank 2 – K2 is used as the polarizing voltage source.

Path: ***Setpoints*** > ***Protection*** > ***Group 1(6)*** > ***Current*** > ***Sens Ground Directional OC 1(X)***

FUNCTION

Range: Disabled, Enabled

Default: Disabled

POLARIZING MODE

Range: Voltage, Current, Dual

Default: Voltage

This setting selects the polarizing mode for the directional unit.

- If Voltage polarizing mode is selected, the element uses the zero-sequence voltage angle for polarization. Select either the zero-sequence voltage V_0, calculated from the phase voltages, or the zero-sequence

voltage supplied externally as the auxiliary voltage V_X. The calculated V_0 can be used as polarizing voltage only if the voltage transformers are connected in Wye. The auxiliary voltage can be used as the polarizing voltage if the auxiliary voltage is connected to a zero-sequence voltage source (such as the open delta connected secondary of VTs). The zero-sequence (V_0) or auxiliary voltage (Vx), accordingly, must be greater than the voltage set under "Polarizing Volt Supv" to be validated for use as a polarizing signal. If the polarizing signal is invalid, neither forward nor reverse indication is given.

- If Current polarizing mode is selected, the element uses the angle of the ground current measured on the ground current input. The ground current must be greater than 0.05 x CT to be validated as a polarizing signal. If the polarizing signal is not valid, neither forward nor reverse indication is given. For a choice of current polarizing, it is recommended that the polarizing signal be analyzed to ensure that a known direction is maintained irrespective of the fault location.
- If Dual polarizing mode is selected, the element performs both directional comparisons as described above. A given direction is confirmed if either voltage or current comparators indicate so. If a conflicting (simultaneous forward and reverse) indication occurs, the forward direction overrides the reverse direction.

POLARIZING VOLTAGE

Range: Calculated V0, Measured VX(VN)

Default: Calculated V0

Selects the polarizing voltage used by the directional unit when "Voltage" or "Dual" polarizing mode is set. The polarizing voltage can be programmed to be either the zero-sequence voltage calculated from the phase voltages ("Calculated V_0") or supplied externally as an auxiliary voltage ("Measured VX(VN)").

POLARIZING VOL SUPV

Range: 0.005 to 0.100 x VT in steps of 0.005 x VT

Default: 0.020 x VT

The zero-sequence (V_0) or auxiliary voltage (Vx), accordingly, must be greater than the Polarizing supervision voltage configured in this setting, to be validated for use as a polarizing signal. If the polarizing signal is invalid, neither forward nor reverse indication is given.

FORWARD ECA

Range: –90° to 90° in steps of 1°

Default: 75°

This setting defines the element characteristic angle (ECA) for the forward direction in "Voltage" polarizing mode. "Current" polarizing mode uses a fixed ECA of 0°. The ECA in the reverse direction is the angle set for the forward direction shifted by 180°.

FORWARD LIMIT ANGLE

Range: 40° to 90° in steps of 1°

Default: 90°

This setting defines a symmetrical (in both directions from the ECA) limit angle for the forward direction.

FORWARD PICKUP

Range: 0.005 to 3.000 x CT in steps of 0.001 x CT

Default: 0.050 x CT

This setting defines the Pickup level for the overcurrent unit of the element in the forward direction.

REVERSE LIMIT ANGLE

Range: 40° to 90° in steps of 1°

Default: 90°

This setting defines a symmetrical (in both directions from the ECA) limit angle for the reverse direction.

REVERSE PICKUP

Range: 0.005 to 3.000 x CT in steps of 0.001 x CT

Default: 0.050 x CT

This setting defines the Pickup level for the overcurrent unit of the element in the reverse direction.

BLOCK

Range: Off, Any FlexLogic operand

Default: Off

EVENTS

Range: Enabled, Disabled

Default: Enabled

TARGETS

Range: Self-reset, Latched, Disabled

Default: Self-reset

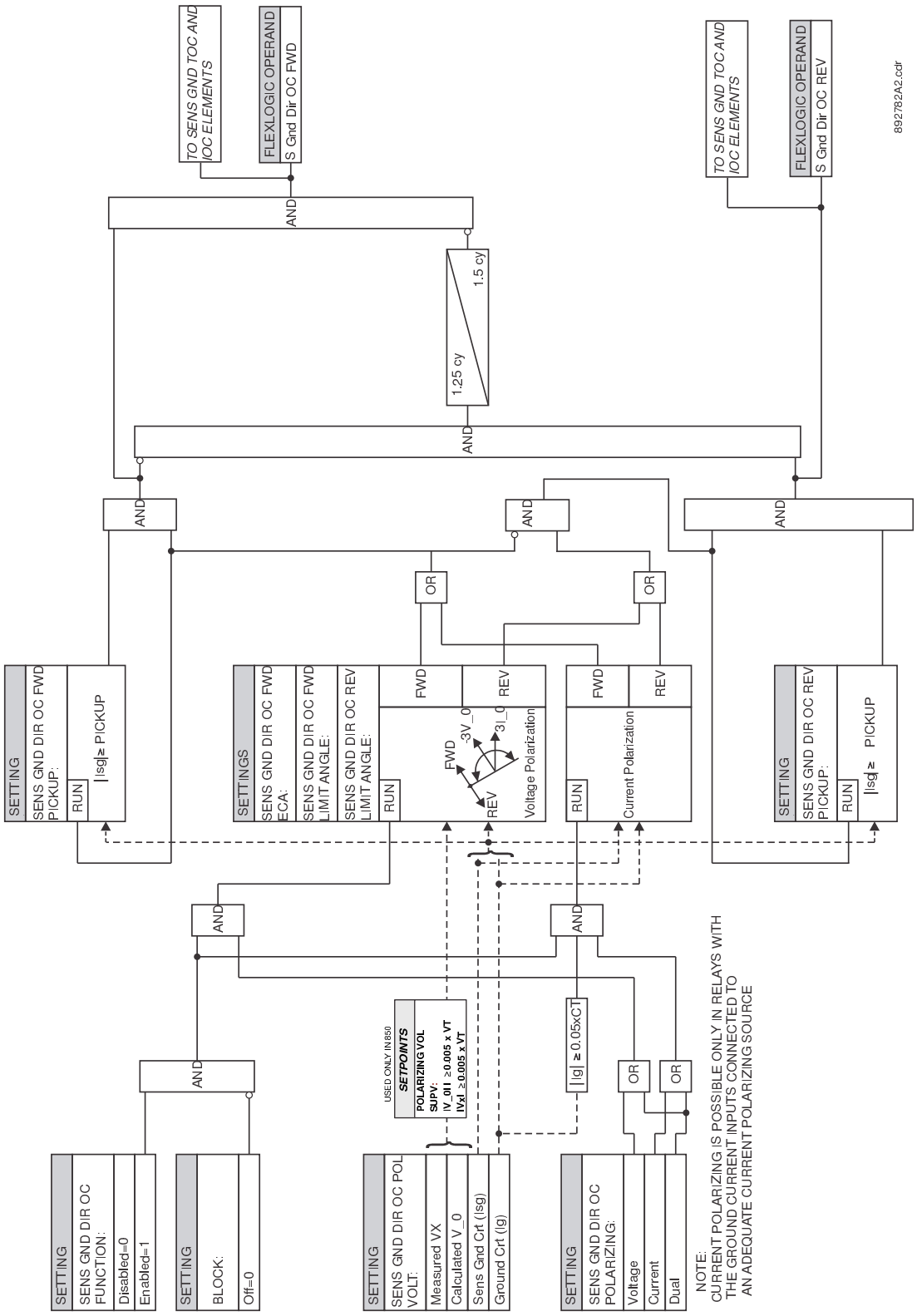

Figure 164: Sensitive Ground Directional Overcurrent Protection logic diagram

9.2.1.14 RESTRICTED GROUND FAULT (87G)

Restricted Ground Fault (RGF) protection provides ground fault detection for low-magnitude ground fault currents primarily for ground faults close to the neutral point of the wye connected transformer winding. An internal ground

fault on an impedance grounded wye winding produces a low magnitude ground fault current depending on the position of the fault with respect to the winding neutral point.

The diagram below shows the dependence of the fault current on the fault distance from the neutral point.

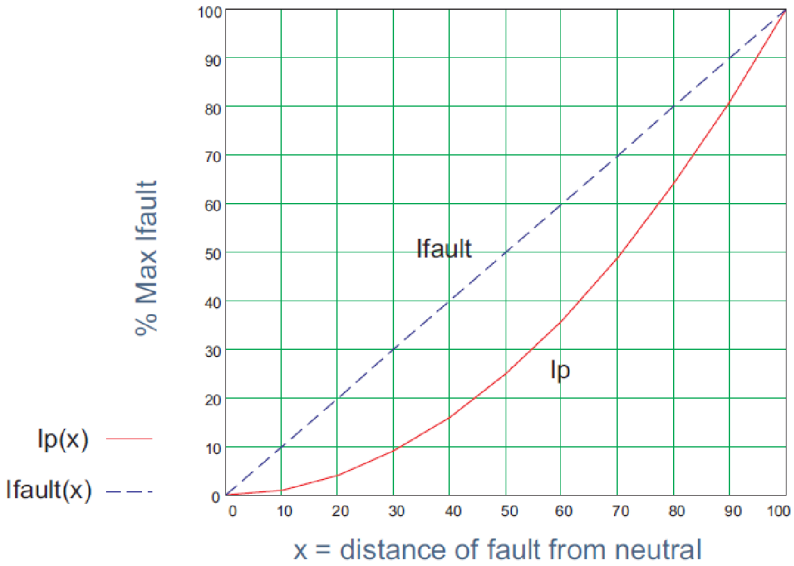

Figure 165: Fault current with respect to distance from neutral

The resultant primary current can be negligible for ground winding faults within 35% of the distance from the neutral point since the fault voltage is not the system voltage, but rather the result of the transformation ratio between the primary windings and the percentage of shorted turns.

Application of Restricted Ground Fault protection extends the fault coverage towards the neutral point for low-impedance grounded winding.

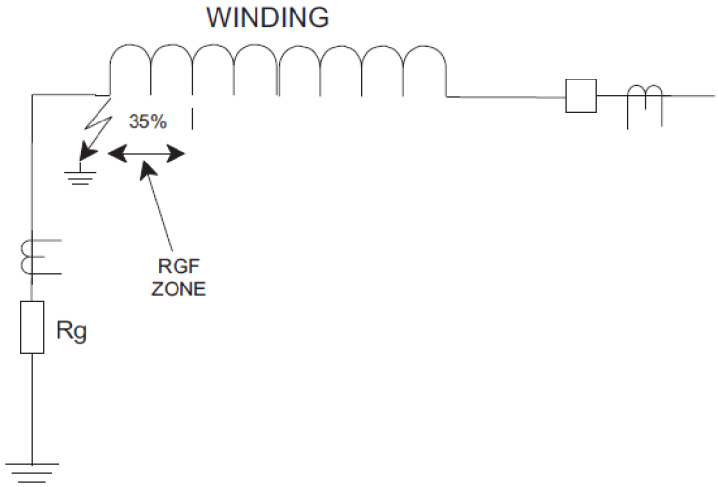

Figure 166: Restricted Ground Fault zone of protection

RGF protection in the 8-series range of relays uses a low impedance current differential scheme. The relay calculates the magnitude of the ground differential current as an absolute value from the vector summation of the computed residual current, and the measured ground current, and applies a restraining current defined as the maximum measured line current (Imax) to produce a percent slope value. The slope setting allows determination of the sensitivity of the element based on the class and quality of the CTs used. The figure below shows typical wiring between the winding and ground CTs and the CT terminals, to assure correct performance of the protection.

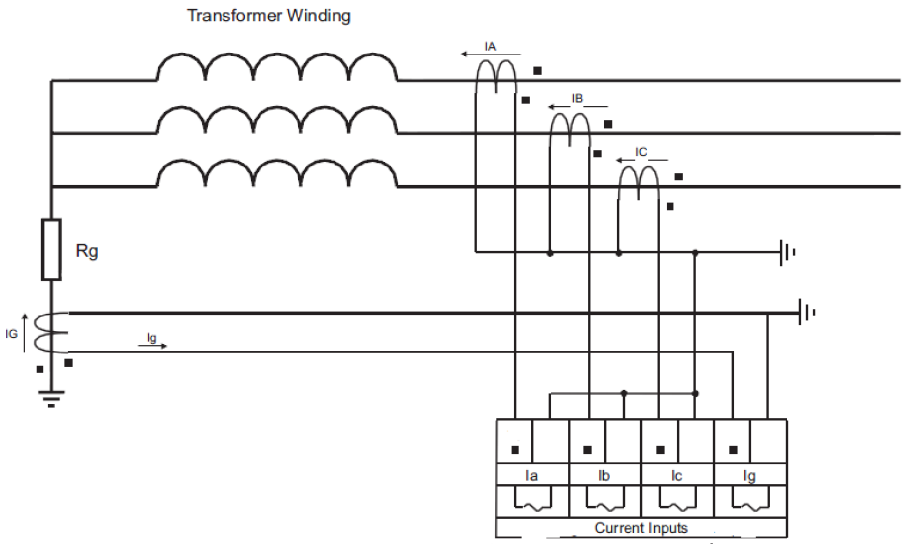

Figure 167: Three CT wiring for the Restricted Ground Fault protection

RGF protection includes ground current supervision mechanism to provide more security during external non-ground faults associated with CT saturation. This can cause spurious neutral currents, which may jeopardize the security of the RGF 1 protection. Therefore, when the ***GROUND CURRENT SUPERVISION*** setting is enabled, the algorithm checks whether the ground current measured by the relay satisfies the selected ***GROUND CURRENT SUPERV LEVEL***, before making an operation decision. The ground current supervision is not active if the ***GROUND CURRENT SUPERVISION*** is selected as `Disabled`. The RGF 1 protection works without the supervision as well.

The settings of this function are applied to the ground and all three phase currents to produce pickup and trip flags. The RGF 1 pickup flag is asserted, when the restrained ground differential current is above the PKP value. The RGF 1 operate flag is asserted if the element stays picked up for the time defined in ***RGF 1 PKP DELAY***. The element drops from Pickup without operation, if the calculated restrained ground differential current drops below 97-98% of the Pickup value, before the time for operation is reached.The Restricted Ground Fault function can be inhibited by a blocking input.

Path: ***Setpoints*** > ***Protection*** > ***Group 1(6)*** > ***Current*** > ***RGF 1 (X)***

FUNCTION

Range: Disabled, Trip, Alarm, Latched Alarm, Configurable

Note: Relays with firmware version 4 and later have a `Latched Trip` *option*

Default: Disabled

SIGNAL INPUT

Range: dependent upon the order code

Default: CT Bank 1 -J1

PICKUP

Range: 0.050 to 30.000 x CT in steps of 0.001 x CT

Default: 0.300 x CT

This setting defines the minimum Pickup level of the ground differential current required for operation. The Pickup value is expressed in times Phase CT (primary) rating.

SLOPE

Range: 0 to 100% in steps of 1%

Default: 50%

This setting defines the slope as the ratio between the ground differential current and the maximum line current (ground restraining current) as a percentage. The RGF 1 element operates if the actual ground differential/ restraint ratio is greater than the slope and the ground differential current is greater than the RGF 1 Pickup setting.

PICKUP DELAY

Range: 0.000 to 6000.000 s in steps of 0.001 s

Default: 0.100 s

The RGF 1 Pickup Time Delay setting defines the time required for the RGF 1 element to operate after it has picked up. This time delay overrides the spurious ground differential current condition caused by CT saturation due to external non-ground faults, or during transformer energization. Since RGF 1 protection is intended to detect small ground fault currents, delayed clearance of such a fault is not a high concern. On the other hand delayed RGF 1 operation due to a spurious ground differential current caused by an out-of-zone fault can be used as a backup for downstream protections should they fail to clear the fault.

GND CURR SUPERV

Range: Disabled, Enabled

Default: Disabled

This setting enables or disables the ground current supervision of the RGF 1 function. If set to `Disabled`, the RGF 1 function works without ground current supervision. The ground current level is monitored if the setting is set to `Enabled`.

GND CURR SUPERV LEVEL

Range: 0.050 to 30.000 x CT in steps of 0.001 x CT

Default: 0.300 x CT

This setting defines the level of measured ground current above which operation of the RGF 1 protection is allowed. The setting is presented as a times ground CT (primary) rating. The measured ground current is compared to the setting only if the ***GROUND CURRENT SUPERVISION*** is set to `Enabled`.

BLOCK

Range: Off, Any FlexLogic operand

Default: Off

OUTPUT RELAY X

Range: Operate, Do Not Operate

Default: Do Not Operate

EVENTS

Range: Enabled, Disabled

Default: Enabled

TARGETS

Range: Self-reset, Latched, Disabled

Default: Self-reset

Example: Transformer : 5MVA, 13.8kV/4.16kV, D/Yg1 type

- Rg = 10 ohms
- Phase CTs: 800:5
- Ground CT: 300:5
- Ifgnd (max) = 4.16kV/(10 ohms *√3) = 240A - maximum ground fault current

To detect a ground fault on the Wye winding at 15% distance from the neutral point, the relay shall detect ground differential current of:

- Igd = (15x240)/100 = 36 A/800 = 0.045 x CT – PKP setting for the RGF protection

The transformer loading is almost unaffected for ground faults close to the winding neutral, so that the winding rated load can be used as a reference in defining the RGF 1 slope setting. The rated load for 4.16kV Wye winding is:

- Irated = 5MVA/(4.16kV*√3) = 693 A

Slope setting, % = (36 A/693A)*100 = 5.1%. Select 5% if the transformer is expected to run most of the time at full load. If most of the time the transformer runs at lower than the nominal loads, the slope setting can be set to higher value:

- @ 70% load the slope setting would be: (36 / 485 A)*100 = 7%
- @ 50% load the slope setting would be: (36 / 346 A)*100 = 10%
- @ 30% load the slope setting would be: (36 / 208 A)*100 = 17%

The ground current supervision feature and/or the RGF 1 Pickup time delay can be used if CT saturation due to heavy external fault, is a concern.

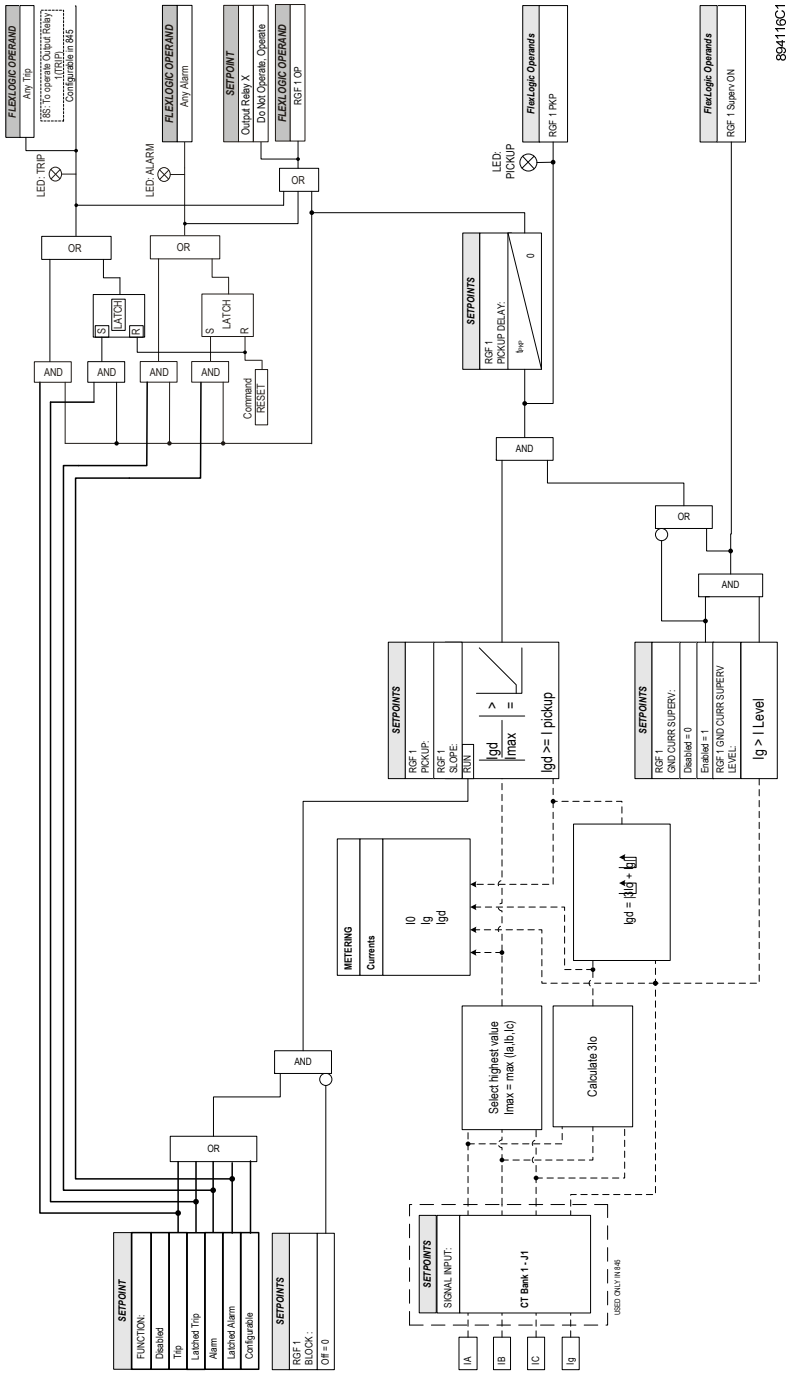

Figure 168: Restricted Ground Fault Protection Logic Diagram

9.2.1.15 SWITCH ON TO FAULT (SOTF)

Switch on to Fault protection (SOTF) is provided for high speed clearance of any detected fault immediately following manual closure or closure after a long open time of the circuit breaker. Without SOTF, there is a risk that if the breaker is closed onto close-in three-phase fault, the measured voltages may be too small for the impedance zones or the directional overcurrent stages to operate reliably.

Note:
SOTF 1 (2 or 3) are associated with Breaker 1. The SOTF logic uses breaker status from BKR1. SOTF 4 (5 or 6) are associated with Breaker 2. The SOTF logic uses breaker status from BKR2. The CT Input and VT Input settings should be configured to match their respective breakers.

Path: ***Setpoints*** > ***Protection*** > ***Group 1(6)*** > ***Current*** > ***SOTF 1(X)***

FUNCTION

Range: Disabled, Trip, Alarm, Latched Alarm, Configurable

Note: Relays with firmware version 4 and later have a `Latched Trip` *option*

Default: Disabled

VT INPUT

Range: Ph VT Bnk1-J2

Default: Ph VT Bnk1-J2

CT INPUT

Range: CT Bank 1-J1

Default: CT Bank 1 -J1

DEAD LINE MAX VOLTAGE

Range: 0.05 to 1.00 x VT in steps of 0.01

Default: 0.20 x VT

This setting sets the dead line voltage threshold. Voltage above this setting is not considered for the dead line condition. To be in a dead line condition all phases must be below this threshold.

DEAD LINE MAX CURRENT

Range: 0.05 to 1.00 x CT in steps of 0.01

Default: 0.05 x CT

This setting defines the dead line current threshold. Currents above this setting value are not considered to be in dead line condition. To be in dead line condition all phases have to be below this threshold.

DEAD LINE PICKUP DELAY

Range: 0.000 to 6000.000 s in steps of 0.001

Default: 10.000 s

This setting defines the dead line pickup delay. Once in dead line condition for current AND voltage, the dead line signal will be set after this delay if conditions are still true. This value should be longer than the longest autoreclose shot time.

SOTF MAX VOLTAGE

Range: 0.05 to 3.00 x VT in steps of 0.01

Default: 0.50 x VT

This setting defines the SOTF maximum voltage threshold. Above this setting the element is not in SOTF condition. To be in SOTF condition, the same phase for current and voltage have to be in SOTF condition.

Note:
VTs should be connected to the line side and not the bus side for detection by voltage and currents.

SOTF CURRENT PICKUP

Range: 0.05 to 10.00 x CT in steps of 0.01

Default: 2.00 x CT

This setting defines the SOTF current pickup threshold. Below this setting the element is not in SOTF condition. To be in SOTF condition, the same phase for current and voltage have to be in SOTF condition.

SOTF DETECTION WINDOW

Range: 0.000 to 6000.000 s in steps of 0.001

Default: 0.500 s

This setting defines this time window where SOTF detection is active after a circuit breaker closure.

EXTERNAL SOTF TRIGGER

Range: Off, Any FlexLogic operand

Default: Off

SOTF can be detected by this logic or by an external logic or device. This setting defines the external signal that can also detect the SOTF condition.

PICKUP DELAY

Range: 0.000 to 6000.000 s in steps of 0.001

Default: 0.000 s

This setting defines a potential delay before trip when SOTF is detected.

Note:
The current pickup and the pickup delay settings must be defined according to the potential starting inrush currents and the inrush time upon breaker closure.

BLOCK

Range: Off, Any FlexLogic operand

Default: Off

OUTPUT RELAY X

Range: Operate, Do Not Operate

Default: Do Not Operate

EVENTS

Range: Disabled, Enabled

Default: Enabled

TARGETS

Range: Disabled, Self-Reset, Latched

Default: Latched

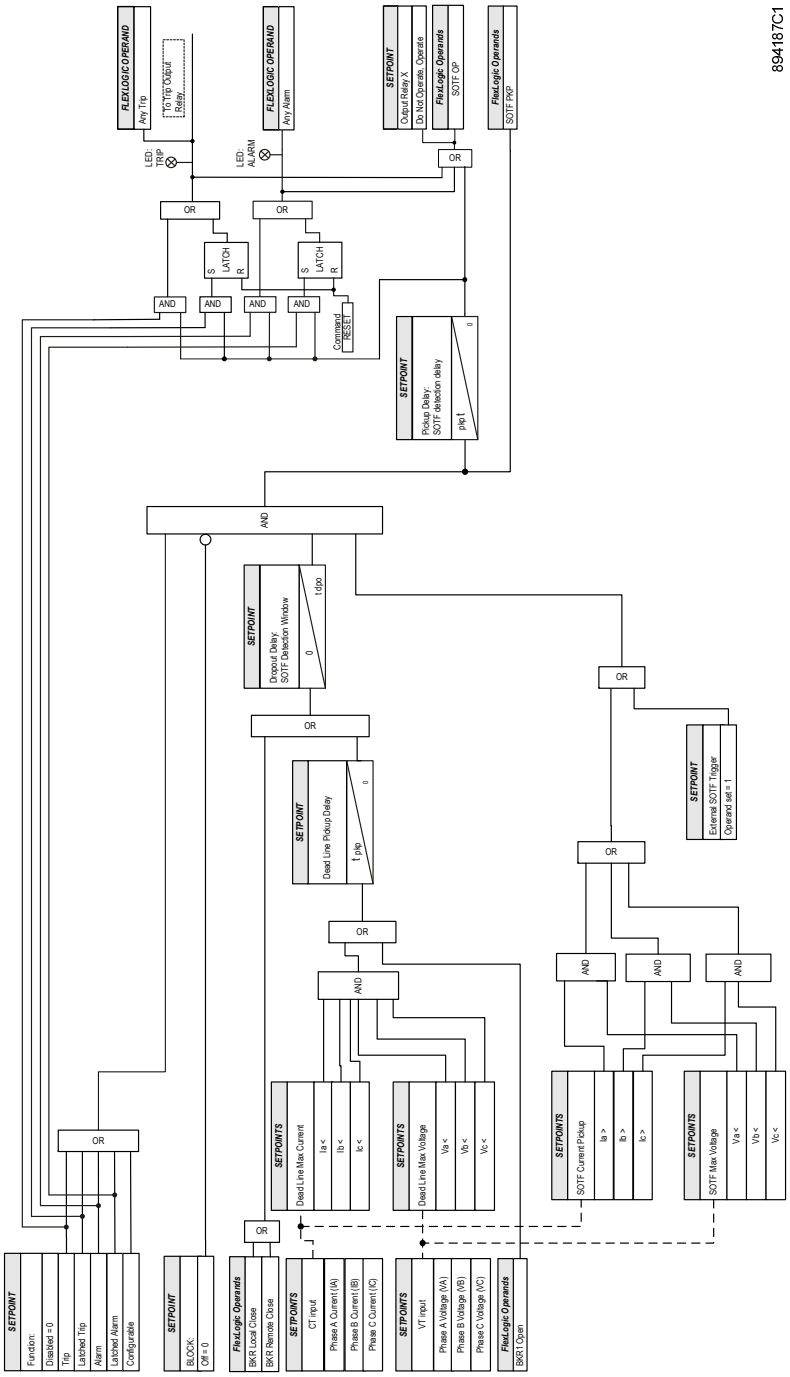

Figure 169: SOTF 1 - Logic Diagram

9.2.1.16 NEGATIVE SEQUENCE TIME OVERCURRENT PROTECTION (51_2)

The Negative Sequence Time Overcurrent element may be used to determine and clear unbalance in the system. The input for computing negative-sequence current is the fundamental phasor value. The relay computes the negative sequence current magnitude |I2| using the following formula:

$$|I2|=1/3*|Ia+Ib*(1\angle 240^{o})+Ic*(1\angle 120^{o})|$$

The settings of this function are applied to the calculated negative sequence current to produce *Trip* or *Pickup* flags. The Negative Sequence TOC Pickup flag is asserted when the negative sequence current is above the pickup value. The Negative Sequence TOC Trip flag is asserted if the element stays picked up for the time defined by the

selected inverse curve and the magnitude of the current. The element drops from Pickup without operation if the measured current drops below 97 to 98% of the pickup value, before the time for operation is reached. When Definite Time is selected, the time for Negative Sequence TOC operation is defined only by the TDM setting.

Path: ***Setpoints*** > ***Protection*** > ***Group 1(6)*** > ***Current*** > ***Negative Sequence TOC 1(X)***

FUNCTION

Range: Disabled, Trip, Alarm, Latched Alarm, Configurable

Note: Relays with firmware version 4 and later have a `Latched Trip` *option*

Default: Disabled

SIGNAL INPUT

Range: dependent upon the order code

Default: CT Bank 1-J1

This setting provides the selection for the current input bank. The default bank name can be changed in Setpoints > System > Current Sensing > [Name] > CT Bank Name.

The ***Signal Input*** setting is visible only in the 845 and 889. For other products, it is hidden.

PICKUP

Range: 0.020 to 30.000 x CT in steps of 0.001 x CT

Default: 1.000 x CT

This setting sets the pick-up threshold of Negative Sequence TOC element.

CURVE

Range: Definite Time, IEC Curve A, IEC Curve B, IEC Curve C, IEC Short Inverse, Long Time Inverse, Rectifier, SI(1.3s), BPN EDF, IEEE Mod Inverse, IEEE Very Inverse, IEEE Extr. Inverse, US Inverse, US ST Inverse, ANSI Extr. Inverse, ANSI Very Inverse, ANSI Norm Inverse, ANSI Mod Inverse, IAC Extr. Inverse, IAC Very Inverse, IAC Inverse, IAC Short Inverse, I2t, I4t, Rapid Inverse, FlexCurve A, FlexCurve B, FlexCurve C, FlexCurve D.

Default: IEEE Moderately Inverse

TDM

Range: 0.010 to 600.00 in steps of 0.01

Default: 1.00

This is the Time Multiplier Setting to adjust the operate time of IEC Curve A/B/C, IEEE M/V/E Inverse, US Inverse, US Short Time, ANSI E/V/N/M Inverse, IAC E/V/N/S Inverse, I2T and I4T curves.

TMS

Range: 0.025 to 1.200 in steps of 0.005

Default: 1.000

This is the Time Multiplier Setting to adjust the operate time of IEC Short Inverse, Long Time Inverse, Rectifier, Standard Inverse SI(1.3s) and BPN EDF curves.

K (RI)

Range: 0.10 to 10.00 in steps of 0.05

Default: 1.00

This setting defines the Time multiplier constant to adjust the operate time of the Rapid Inverse (RI) curve.

This k(RI) setting can be made visible from setting management, only when ‘Curve’ setting is selected as Rapid Inverse curve

TIME DELAY

Range: 0.000 to 200.000 s in steps of 0.001 s

Default: 1.000

This setting sets the Time delay for the Negative Sequence TOC element, when operate time is selected as Definite Time (DT).

This Time Delay setting can be made visible from setting management, only when ‘Curve’ setting is selected as Definite Time (DT).

DT Adder

Range: 0.00 to 100.00 s in steps of 0.01 s

Default: 0.00

This setting adds an additional fixed time delay to the IDMT Operate characteristic.

The ***DT Adder*** setting will be visible for when any IDMT curves are selected under Curve setting.

RESET

Range: DT, Inverse

Default: DT

Selection of a Definite Time (DT) or Inverse reset time is provided using this setting.

If Definite Time (DT) reset is selected, the element will reset after a time delay provided by Reset Time (IEC tReset) setting. If Inverse reset is selected, the time to reset is calculated based on the reset equation for the selected inverse curve.

When using IEC Short Inverse, Long Time Inverse, BPN EDF, Rectifier, Rapid Inverse curves for the Operate characteristic, Definite Time is used by default as Reset characteristic.

Reset Time [ANSI]

Range: 0.000 to 600.000 s in steps of 0.001 s

Default: 0.000s

This setting determines the Reset Time for the Definite Time (DT) characteristic.

This can be made visible from setting management when ‘Reset Char’ setting is selected as DT or when using Long Time Inverse, IEC Short Inverse, BPN EDF, Rectifier, and RI curves.

DIRECTION

Range: Disabled, Forward, Reverse

Default: Disabled

BLOCK

Range: Off, Any FlexLogic operand

Default: Off

OUTPUT RELAY X

Range: Operate, Do Not Operate

Default: Do Not Operate

EVENTS

Range: Enabled, Disabled

Default: Enabled

TARGETS

Range: Self-reset, Latched, Disabled

Default: Self-reset

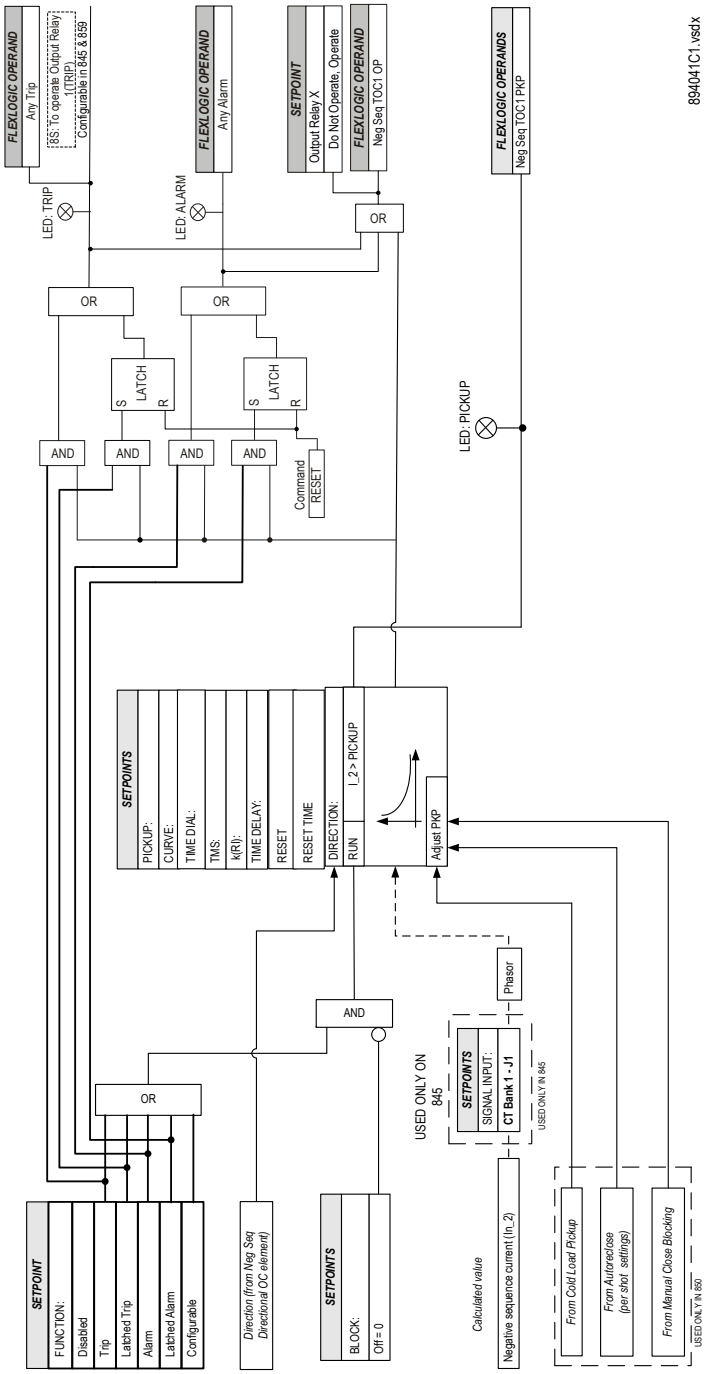

Figure 170: Negative Sequence Time Overcurrent Protection logic diagram

9.2.1.17 NEGATIVE SEQUENCE INSTANTANEOUS OVERCURRENT PROTECTION (50_2)

The Negative Sequence Instantaneous Overcurrent element may be used to determine and clear unbalance in the system. The input for computing negative sequence current is the fundamental phasor value. The relay computes the negative sequence current magnitude |I2| using the following formula:

$$|I2|=1/3*|Ia+Ib*(1\angle 240^{o})+Ic*(1\angle 120\ ^{o})|$$

The element responds to the negative-sequence current and applies a positive sequence restraint for better performance: a small portion (12.5%) of the positive sequence current magnitude is subtracted from the negative sequence current magnitude when forming the operating quantity:

$$Iop = |I2| - K * |I_1|$$

where K = 1/8 and $|I_1| = 1/3*|Ia+Ib*(1\angle 120^{o})+Ic*(1\angle 240\ ^{o})|$

The positive sequence restraint allows for more sensitive settings by counterbalancing spurious negative-sequence currents resulting from:

- system unbalances under heavy load conditions
- current transformer (CT) transformation errors during three-phase faults
- fault inception and switch-off transients during three-phase faults.

The positive sequence restraint must be considered when testing for Pickup accuracy and response time (multiple of Pickup). The operating quantity depends on the way the test currents are injected into the relay (single-phase injection: Iop = 0.2917 * I_injected; three-phase injection, opposite rotation: Iop = I_injected).

The settings of this function are applied to the calculated negative sequence current to produce *Pickup* and *Trip* flags. The Negative Sequence IOC Pickup flag is asserted, when the negative sequence current is above the pickup value. The Negative Sequence IOC Operate flag is asserted if the element stays picked up for the time defined by the Negative Sequence IOC ***PICKUP DELAY*** setting. If the Pickup time delay is set to 0.000 seconds, the Pickup and Operate flags are asserted at the same time. The element drops from Pickup without operation if the negative sequence current drops below 97 to 98% of the Pickup value.

Path: ***Setpoints*** > ***Protection*** > ***Group 1(6)*** > ***Current*** > ***Negative Sequence IOC 1(X)***

FUNCTION

Range: Disabled, Trip, Alarm, Latched Alarm, Configurable

Note: Relays with firmware version 4 and later have a `Latched Trip` *option*

Default: Disabled

SIGNAL INPUT

Range: dependent upon the order code

Default: CT Bank 1-J1

This setting provides the selection for the current input bank. The default bank names can be changed in: ***Setpoints*** > ***System*** > ***Current Sensing*** > ***[Name]*** > ***CT Bank Name***.

PICKUP

Range: 0.020 to 30.000 x CT in steps of 0.001 x CT

Default: 1.000 x CT

DIRECTION

Range: Non-Directional, NegSeq Dir [1-4] FWD, NegSeq Dir [1-4]

Default: Non-Directional

PICKUP DELAY

Range: 0.000 to 6000.000 s in steps of 0.001 s

Default: 0.000 s

DROPOUT DELAY

Range: 0.000 to 6000.000 s in steps of 0.001 s

Default: 0.000 s

BLOCK

Range: Off, Any FlexLogic operand

Default: Off

OUTPUT RELAY X

Range: Operate, Do Not Operate

Default: Do Not Operate

EVENTS

Range: Enabled, Disabled

Default: Enabled

TARGETS

Range: Self-reset, Latched, Disabled

Default: Self-reset

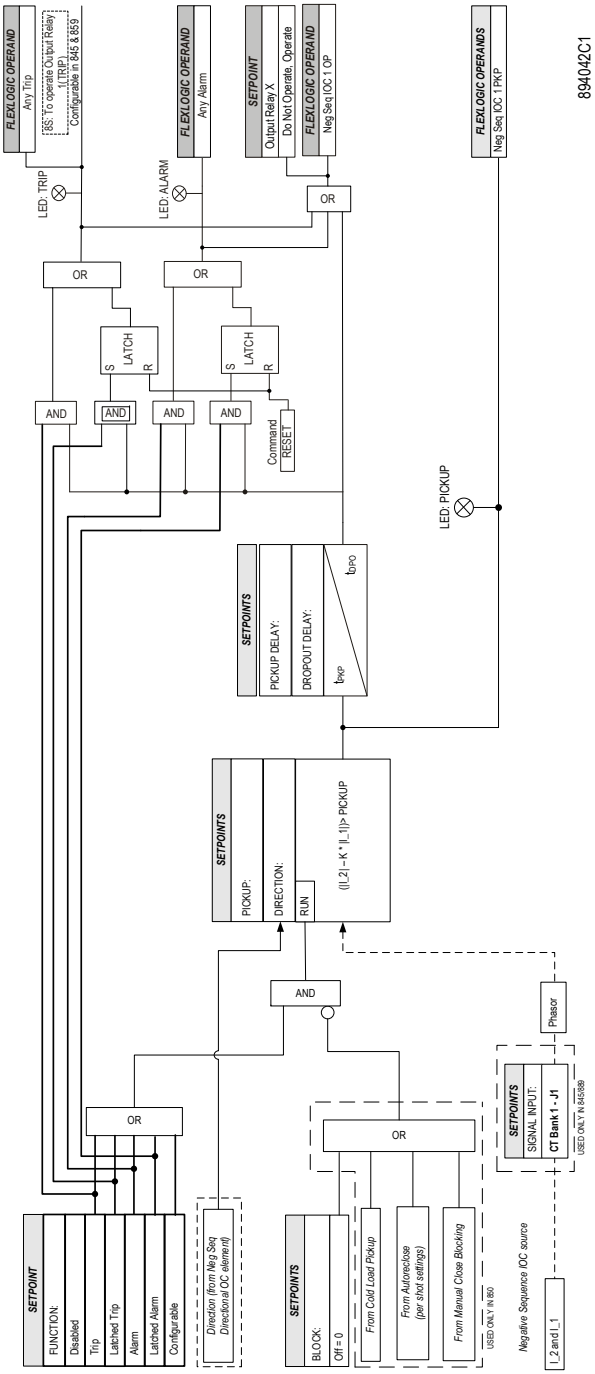

Figure 171: Negative Sequence Instantaneous Overcurrent logic diagram

9.2.1.18 NEGATIVE SEQUENCE DIRECTIONAL OVERCURRENT PROTECTION (67_2)

The relay is equipped with the Negative Sequence Directional Overcurrent protection element. The element provides both forward and reverse fault direction indications through its output operands Neg Seq Dir OC FWD and Neg Seq Dir OC REV, respectively. The output operand is asserted if the magnitude of the operating current is above a Pickup level (overcurrent unit) and the fault direction is seen as forward or reverse, respectively (directional unit). The overcurrent unit of the element essentially responds to the magnitude of a fundamental frequency phasor of the negative sequence phase current. A positive sequence restraint is applied for better performance: a small user-programmable portion of the positive sequence current magnitude is subtracted from the negative sequence current magnitude when forming the element operating quantity:

$$Iop = |I_2| - K * |I_1|$$

The positive sequence restraint allows for more sensitive settings by counterbalancing spurious negative sequence currents resulting from:

- system unbalances under heavy load conditions
- current transformer (CT) transformation errors
- fault inception and switch-off transients.

The operating quantity depends on the way the test currents are injected into the relay. For single phase injection:

$$I_{op} = 1/3 * (1 - K) \times I_{injected} \text{ for I_2 mode}$$

The directional unit uses the negative sequence current (I_2) and negative-sequence voltage (V_2).

The following tables define the Negative Sequence Directional Overcurrent element.

Negative Sequence Directional Overcurrent Unit

Mode	Operating Current
Negative-Sequence	Iop = |I_2| - K x |I_1|

Negative Sequence Directional Unit

Direction	Compared Phasors	
Forward	-V_2	I_2 x 1∠ECA
Reverse	-V_2	-(I_2 x 1∠ECA)

The negative sequence voltage must be greater than 0.02 x VT to be validated for use as a polarizing signal. If the polarizing signal is not validated, neither forward nor reverse indication is given. The figure below explains the usage of the voltage polarized directional unit of the element by showing the phase angle comparator characteristics for a phase A to ground fault, with settings of:

- ECA = 75° (element characteristic angle = centerline of operating characteristic)
- FWD LA = 80° (forward limit angle = ± the angular limit with the ECA for operation)
- REV LA = 80° (reverse limit angle = ± the angular limit with the ECA for operation)

The element incorporates a current reversal logic: if the reverse direction is indicated for at least 1.25 of a power system cycle, the prospective forward indication is delayed by 1.5 of a power system cycle. The element is designed to emulate an electromechanical directional device. Larger operating and polarizing signals result in faster directional discrimination bringing more security to the element operation.

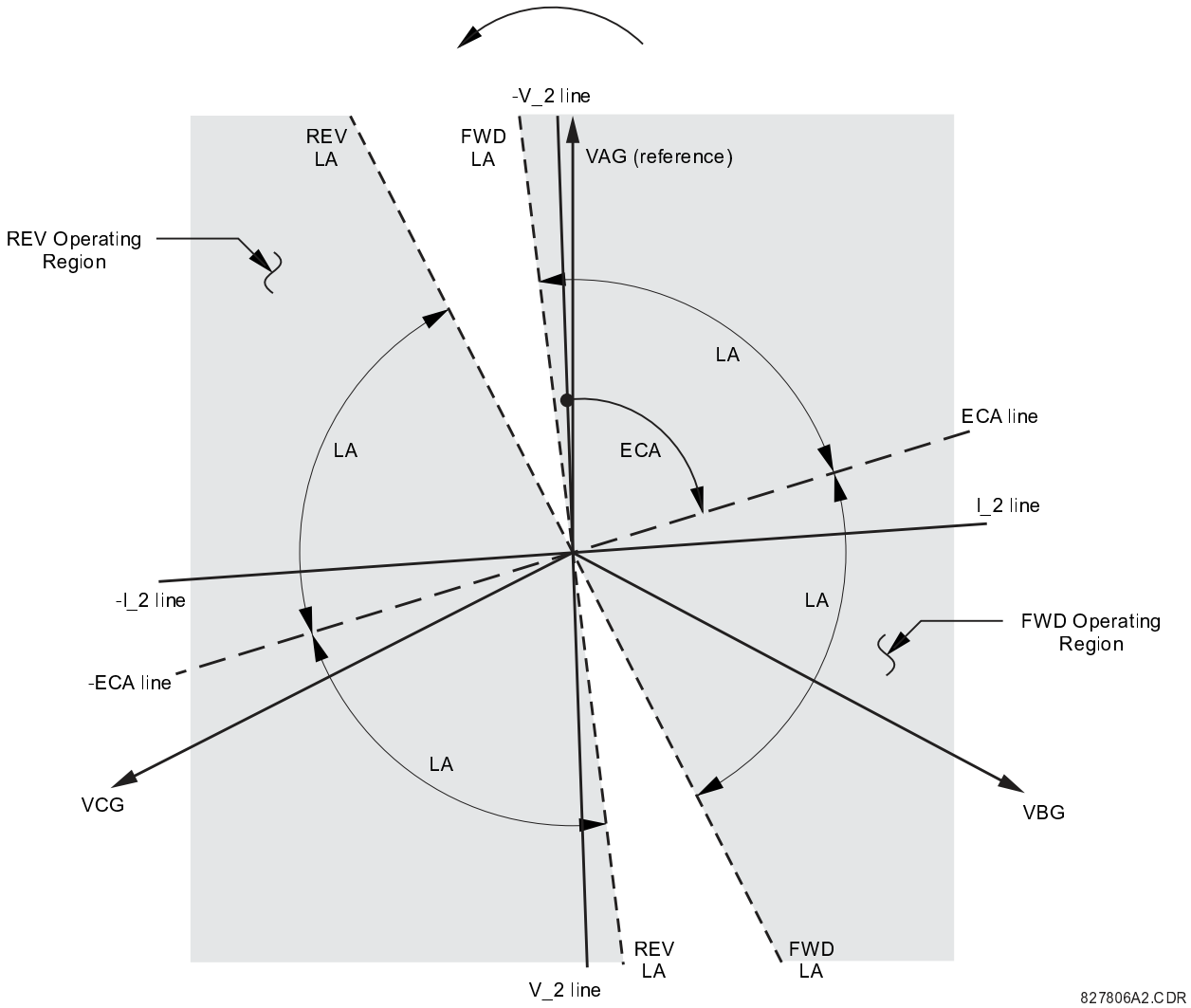

Figure 172: Negative Sequence Directional Characteristic

The forward-looking function is designed to be more secure compared to the reverse-looking function, and should therefore be used for the tripping direction. The reverse-looking function is designed to be faster compared to the forward-looking function and should be used for the blocking direction. This allows better protection coordination. The above bias should be taken into account when using the Negative Sequence Directional Overcurrent element to directionalize other protection elements.

For dual feeder applications, when the signal input is from CT Bank 1 – J1, VT Bank 1 -J2 is used as the polarizing voltage source. Similarly, when the signal input is from CT Bank 2 – K1, VT Bank 2 – K2 is used as the polarizing voltage source.

Path: ***Setpoints*** > ***Protection*** > ***Group 1(6)*** > ***Current*** > ***Negative Sequence Dir OC 1(X)***

FUNCTION

Range: Disabled, Enabled

Default: Disabled

SIGNAL INPUT

Range: dependent upon the order code

Default: CT Bank 1 -J1

This setting provides a selection for the CT Bank input.

POS-SEQ RESTRAINT

Range: 0.000 to 0.500 in steps of 0.001

Default: 0.063

The setting controls the positive-sequence restraint. Set to 0.125. Set to zero to remove the restraint. Set higher if large system unbalances or poor CT performance are expected.

FORWARD ECA

Range: 0 to -90° in steps of 1°

Default: -75°

The setting selects the element characteristic angle (ECA) for the forward direction. The element characteristic angle in the reverse direction is the angle set for the forward direction shifted by 180°.

FORWARD LIMIT ANGLE

Range: 40 to 90° in steps of 1°

Default: 90° lag

The setting defines a symmetrical (in both directions from the ECA) limit angle for the forward direction.

FORWARD PICKUP

Range: 0.020 to 30.000 x CT in steps of 0.001 x CT

Default: 0.050 x CT

The setting defines the Pickup level for the overcurrent unit in the forward direction. When selecting this setting it must be kept in mind that the design uses a positive-sequence restraint technique.

REVERSE LIMIT ANGLE

Range: 40 to 90° in steps of 1°

Default: 90° lag

The setting defines a symmetrical (in both directions from the ECA) limit angle for the reverse direction.

REVERSE PICKUP

Range: 0.020 to 30.000 x CT in steps of 0.001 x CT

Default: 0.050 x CT

The setting defines the Pickup level for the overcurrent unit in the reverse direction. When selecting the setting it must be kept in mind that the design uses a positive-sequence restraint technique.

BLOCK

Range: Off, Any FlexLogic operand

Default: Off

EVENTS

Range: Enabled, Disabled

Default: Enabled

TARGETS

Range: Self-reset, Latched, Disabled

Default: Self-reset

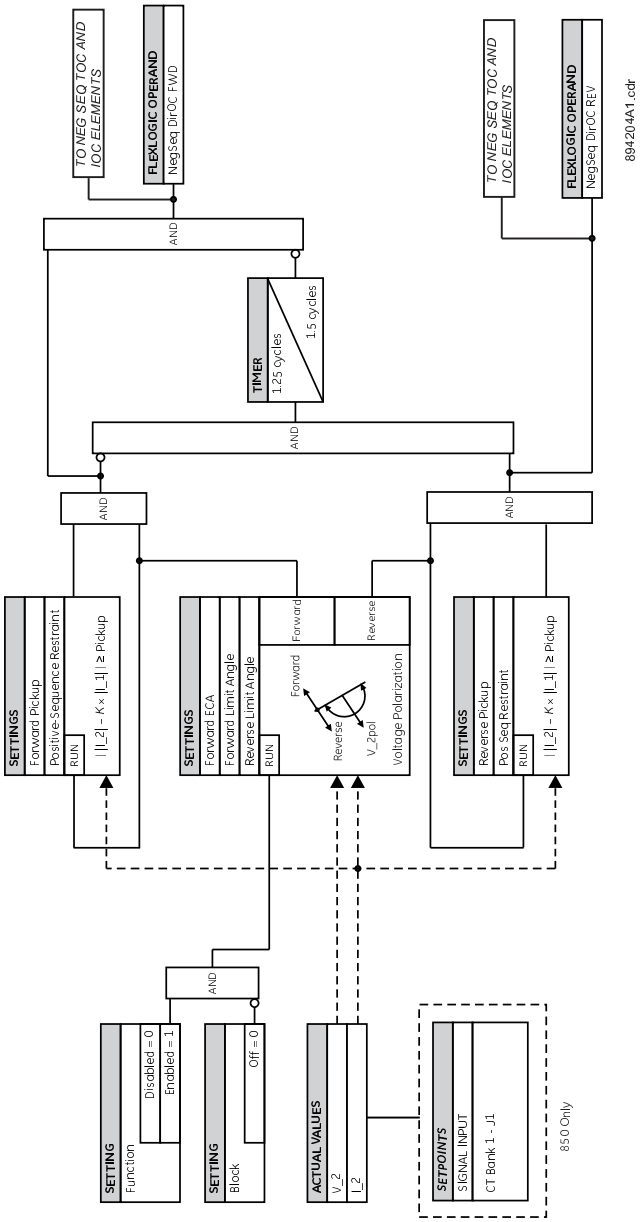

Figure 173: Negative Sequence Directional Overcurrent Protection logic diagram

9.2.1.19 BROKEN CONDUCTOR

The Broken Conductor detection function detects a line broken conductor condition or a single-pole breaker malfunction condition through checking the phase current input phasors and the I_2 / I_1 ratio. In normal and balanced load situations this ratio is zero, while in severe load fault conditions an unbalance is produced and this ratio increases. The intention of this function is to detect a single-phase broken conductor only. As such two-phase or three-phase broken conductors cannot be detected.

To distinguish between single-phase disappearance and system disturbance in all three phases (such as load change, switching, etc.), the broken conductor element monitors the change in all three phase currents at the

present instance and at four cycles previous. It also monitors changes in the I_2 / I_1 ratio, I_1 minimum, and I_1 maximum.

The broken conductor function is not to be used to respond to fault transients and single-pole tripping/reclosing conditions. The time delay is programmed to a sufficient length to ensure coordination with the breaker dead time of the recloser function.

The broken conductor Pickup flag is asserted, when the I_2 / I_1 ratio of the current bank is above the PKP value, the positive current is in a range of nominal, and phase current changes. The broken conductor Trip flag is asserted if the element stays picked up for the time defined by the Pickup time delay. The element instantaneously drops from Pickup without operation, if the I_2 / I_1 ratio decreases to 97% to 98% of the Pickup value, before the time for operation is reached.

Path: ***Setpoints*** > ***Protection*** > ***Group 1(6)*** > ***Current*** > ***Broken Conductor 1(X)***

FUNCTION

Range: Disabled, Trip, Alarm, Latched Alarm, Configurable

Note: Relays with firmware version 4 and later have a `Latched Trip` *option*

Default: Disabled

SIGNAL INPUT

Range: dependent upon the order code

Default: CT Bank 1 -J1

This setting provides the selection for the current bank input.

I_2/I_1 RATIO

Range: 10.0% to 100.0% in steps of 0.1%

Default: 20.0%

The setting specifies the ratio of negative-sequence current to positive-sequence current. When one phase conductor is broken, the I_2 / I_1 ratio with balanced remaining two phases is 50%. So normally the setting should be set below 50% (for example, to 30%).

I_1 MIN

Range: 0.05 to 1.00 x CT in steps of 0.01 x CT

Default: 0.10 x CT

The setting specifies the minimum positive-sequence current supervision level. Ensure the setting is programmed to a level sufficient to prevent I_2 / I_1 from erratic pickup due to a low I_1 signal. However, the setting is not to be set too high since the broken conductor condition cannot be detected under light load conditions when I_1 is less than the value specified by this setting.

I_1 MAX

Range: 0.05 to 5.00 x CT in steps of 0.01 x CT

Default: 1.50 x CT

The setting specifies the maximum I_1 level allowed for the broken conductor function to operate. When I_1 exceeds this setting, it is considered a fault. This broken conductor function should not respond to any fault conditions so normally the setting is programmed to less than the maximum load current.

PICKUP DELAY

Range: 0.000 to 6000.000 s in steps of 0.001 s

Default: 20.000 s

CURRENT SUPERVISION

Range: Disabled, Enabled

Default: Disabled

This setting enables or disables the current supervision functionality in Broken Conductor.

BLOCK

Range: Off, Any FlexLogic operand

Default: Off

OUTPUT RELAY X

Range: Operate, Do Not Operate

Default: Do Not Operate

EVENTS

Range: Enabled, Disabled

Default: Enabled

TARGETS

Range: Self-reset, Latched, Disabled

Default: Self-reset

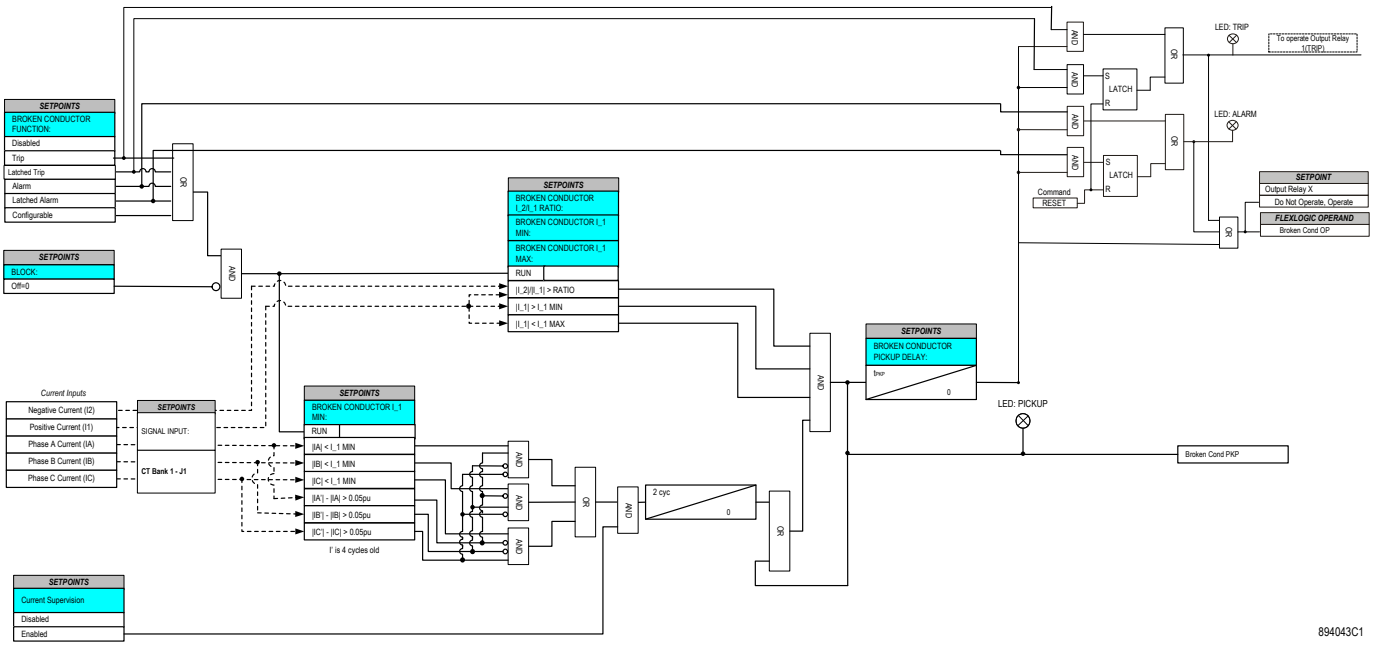

Figure 174: Broken Conductor Protection logic diagram

9.2.1.20 LOAD ENCROACHMENT

The Load Encroachment element responds to the positive-sequence voltage and current and applies a characteristic shown in the figure below:

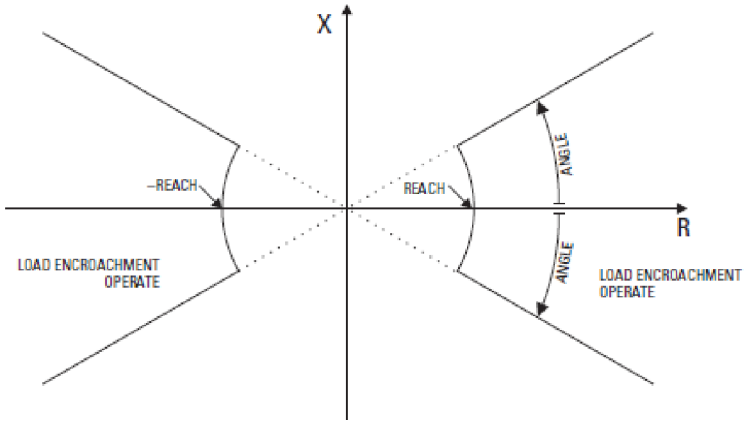

Figure 175: Load Encroachment Characteristic

The element operates if the positive-sequence voltage is above a set level, and asserts its output signal so that it can be used to block selected protection elements such as Phase Overcurrent.

The settings of this function are applied to the positive sequence voltage and positive sequence impedance. The Load Encroachment Pickup flag is asserted when the impedance is inside the Load Encroachment operating area (see the above figure) and the positive sequence voltage is above the minimum operating value. The Load Encroachment Trip flag is asserted if the element stays picked up for the time defined by the Pickup time delay.

Load Encroachment can be inhibited by a blocking input.

Path: ***Setpoints*** > ***Protection*** > ***Group 1(6)*** > ***Current*** > ***Load Encroachment***

FUNCTION

Range: Disabled, Enabled

Default: Disabled

VT INPUT

Range: Ph VT Bnk1-J2, Ph VT Bnk2-K2, LEA Bnk1 -J2, LEA Bnk2 -J2

Default: Ph VT Bnk1-J2

This setting provides the selection for the voltage bank input.

CT INPUT

Range: CT Bank 1 –J1, CT Bank 2 –K1, CT Bank 3 –K2

Default: CT Bank 1 -J1

This setting provides the selection for the current bank input.

MODE

Default: 3Ph(based on Z1)
Range: 3Ph(based on Z1), 1Ph(based on Z)

This setting sets the Load Encroachment to three-phase or single-phase blocking.

If ***Load Encroachment Mode*** is `3ph` (based on Z1):

Positive sequence voltage (V1) and positive sequence current (I1) are considered for Z1 calculation.

- Only 3 phase calculations are performed, individual phase calculations are not necessary.
- Output operands are: Load Encro FWD, Load Encro REV, Load Encro PKP, Load Encro OP

If ***Load Encroachment Mode*** is 1ph (based on Z),

- Phase voltages (Va/Vb/Vc) and phase current (Ia/Ib/Ic) are considered for Z calculation.
- Only individual phase calculations are made. 3 phase calculations are not necessary.
- Output operands are: Load Encro FWD A/B/C, Load Encro REV A/B/C, Load Encro PKP, Load Encro OP A/B/C

DIRECTION

Range: Reverse, Forward, Both

Default: Both

This setting sets the Load Encroachment direction measurement.

MINIMUM VOLTAGE

Range: 0.00 to 1.50 x VT in steps of 0.01 x VT

Default: 0.20 x VT

The setting sets the minimum operating positive-sequence voltage/phase voltage required for operation of the Load Encroachment element. If this voltage is below the set minimum threshold, the element does not operate.

> *Note:*
> *If 3-phase VT is delta connected, the true supervision level is internally changed to 1/√3 of the user setting since the base of VT here is the phase-phase voltage.*

MAXIMUM I2

Range: 0.00 to 1.50 x CT in steps of 0.01 x VT

Default: 0.20 x CT

This setting sets the Negative Phase Sequence current threshold for the Load Encroachment function.

FORWARD REACH

Range: 0.02 to 250.00 Ω in steps of 0.01 Ω

Default: 5.00 Ω

The setting specifies the resistive reach of the element as shown in the Load Encroachment characteristic diagram. The setting is entered in secondary ohms and is calculated as the positive-sequence resistance seen by the relay under maximum load conditions and unity power factor.

FORWARD ANGLE

Range: 5 to 85° in steps of 1°

Default: 30°

This setting specifies the size of the blocking region as shown on the Load Encroachment characteristic diagram, and applies this to the positive-sequence impedance.

REVERSE REACH

Range: 0.02 to 250.00 Ω in steps of 0.01 Ω

Default: 5.00 Ω

This setting specifies the resistive reach of the element as shown in the Load Encroachment characteristic diagram. This setting should be entered in secondary ohms and be calculated as the positive-sequence resistance seen by the relay under maximum load conditions and unity power factor.

REVERSE ANGLE

Range: 5 to 85° in steps of 1°

Default: 30°

This setting specifies the size of the blocking region as shown on the Load Encroachment characteristic diagram and applies this to the positive-sequence impedance

PICKUP DELAY

Range: 0.000 to 6000.00 s in steps of 0.001 s

Default: 0.000 s

> *Note:*
> *It has to be taken into account that the Pickup time delay programmed in the overcurrent elements (or the other elements) that are blocked with Load Encroachment must be higher than the time programmed in the Load Encroachment function, in order to avoid false tripping.*

DROPOUT DELAY

Range: 0.000 to 6000.00 s in steps of 0.001 s

Default: 0.000 s

BLOCK

Range: Off, Any FlexLogic operand

Default: Off

OUTPUT RELAY X

Range: Operate, Do Not Operate

Default: Do Not Operate

EVENTS

Range: Disabled, Enabled

Default: Enabled

TARGETS

Range: Disabled, Self-reset, Latched

Default: Disabled

> *Note:*
> *As the Load Encroachment function operates during normal conditions it is recommended that targets be disabled.*

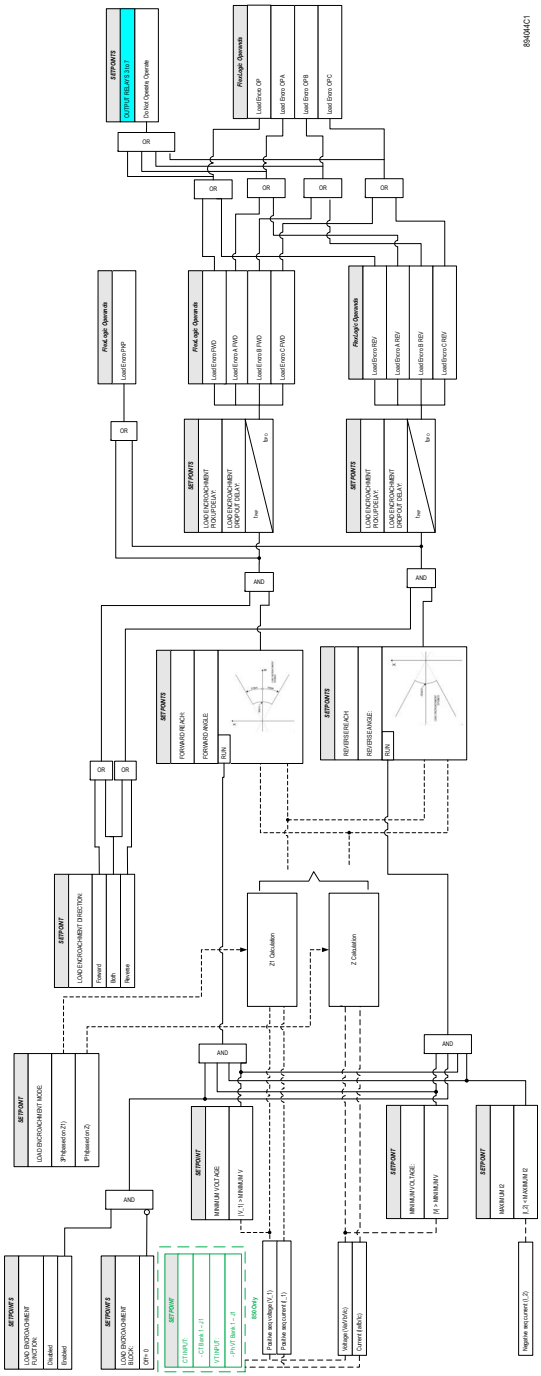

Figure 176: Load Encroachment logic diagram

9.2.1.21 UNDERCURRENT (37)

The Undercurrent element responds to a per-phase current. An alarm will occur if the magnitude of any phase current falls below the undercurrent alarm pickup level for the time specified by the undercurrent alarm delay. Furthermore, a trip will occur if the magnitude of any phase current falls below the undercurrent trip pickup level for the time specified by the undercurrent trip delay. The alarm and trip pickup levels should be set lower than the lowest feeder loading during normal operations.

Undercurrent requires a breaker `close` status to activate the element. In addition, the Undercurrent element can be blocked upon the closing of the feeder breaker for a period of time defined by the setting ***START BLOCK***

DELAY. This block may be used in applications when the load requires time to build up to a certain operating level before the undercurrent element trips or alarms.

> *Note:*
> *Breaker has to be configured as Breaker 1 (programmed under **Setpoints** > **System** > **Breaker 1**) to monitor the breaker close status.*

Path:*Setpoints* > *Protection* > *Group 1* > *Current* > *Undercurrent 1(X)*

TRIP FUNCTION

Range: Disabled, Trip, Latched Trip, Configurable

Default: Disabled

This setting enables the Undercurrent Trip functionality.

SIGNAL INPUT

Range: dependent upon the order code

Default: CT Bank 1-J1

This setting provides the CT Bank input for the Undercurrent element.

START BLOCK DELAY

Range: 0.00 to 1500.00 s in steps of 0.01 s

Default: 0.50 s

The Undercurrent element remains blocked when the breaker closes for a period of time defined by this setting. The ***START BLOCK DELAY*** setting allows the connected load to build-up to a certain level before the undercurrent element trips or alarms.

TRIP PICKUP

Range: 0.05 to 0.95 x CT in steps of 0.01 x CT

Default: 0.60 x CT

This setting specifies a pickup threshold for the trip function.

TRIP PICKUP DELAY

Range: 0.00 to 600.00 s in steps of 0.01 s

Default: 1.00 s

This setting specifies a time delay for the trip function.

TRIP DROPOUT DELAY

Range: 0.00 to 180.00 s in steps of 0.01 s

Default: 1.00 s

This setting specifies a specifies a time delay to reset the trip command. This delay should be set long enough to allow the breaker or contactor to disconnect the feeder.

TRIP OUTPUT RELAY X

Range: Operate, Do Not Operate

Default: Do Not Operate

ALARM FUNCTION

Range: Disabled, Alarm, Latched Alarm

Default: Disabled

This setting enables the Undercurrent Alarm functionality.

ALARM PICKUP

Range: 0.05 to 0.95 x CT in steps of 0.01 x CT

Default: 0.65 x CT

This setting specifies a pickup threshold for the alarm function.

ALARM PICKUP DELAY

Range: 0.00 to 600.00 s in steps of 0.01 s

Default: 1.00 s

This setting specifies a time delay for the alarm function.

ALARM DROPOUT DELAY

Range: 0.00 to 180.00 s in steps of 0.01 s

Default: 1.00 s

This setting specifies a time delay to reset the alarm command.

ALARM OUTPUT RELAY X

Range: Operate, Do Not Operate

Default: Do Not Operate

BLOCK

Range: Off, Any FlexLogic operand

Default: Off

The Undercurrent can be blocked by any asserted FlexLogic operand.

EVENTS

Range: Disabled, Enabled

Default: Enabled

TARGETS

Range: Disabled, Self-reset, Latched

Default: Latched

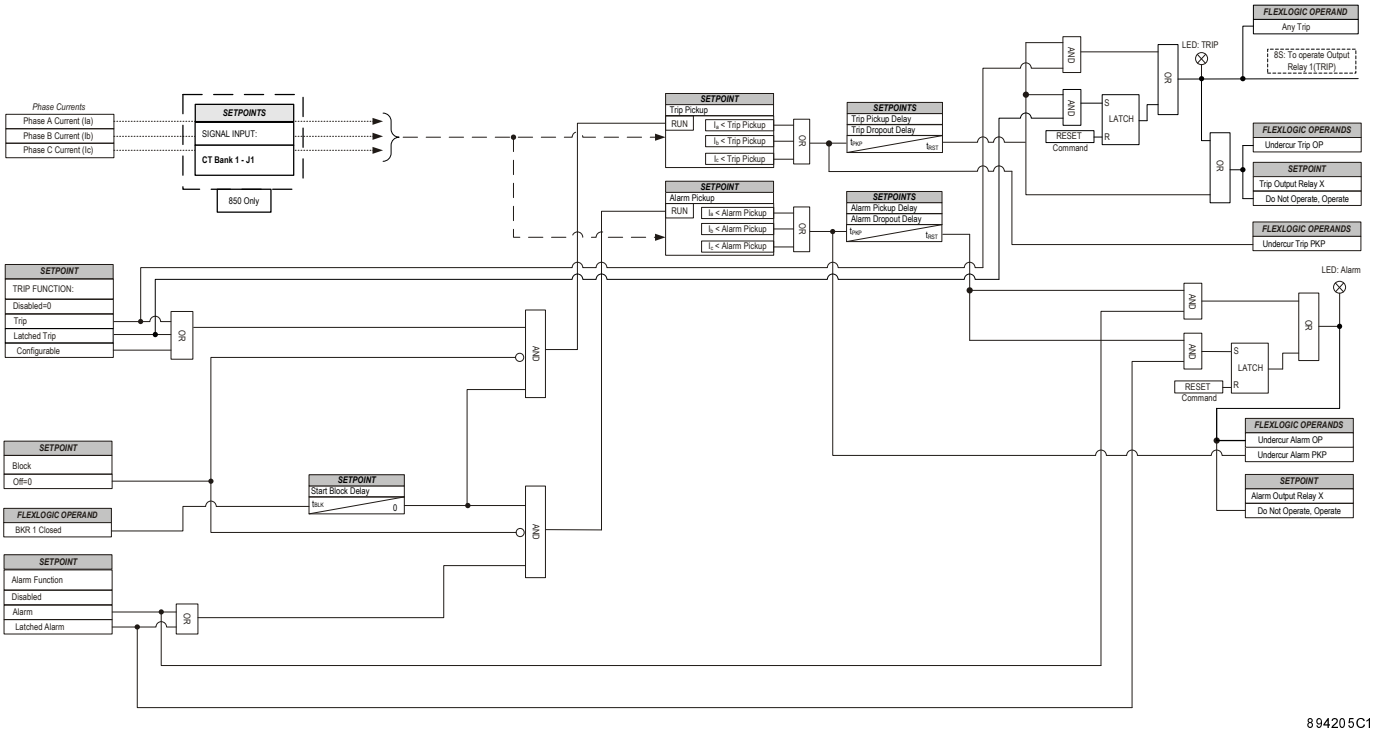

Figure 177: Undercurrent logic diagram

9.2.1.22 THERMAL OVERLOAD (49)

The thermal overload protection (Thermal Model) can be applied to prevent damage to the protected cables, dry transformers, capacitor banks, or even overhead lines. Loads exceeding the load ratings of the protected equipment can, over time, degrade the insulation, and may, in return, lead to short circuit conditions. As the heating of plant equipment such as cables or transformers is resistive (I^2R), the generated heat is directly proportional to the square of the flowing current (I^2). The relay uses a thermal time characteristic based on current squared and integrated over time.

Temperature changes during heating follow exponential time constants. The device provides two characteristics for thermal overload protection; a single time constant characteristic and a dual time constant characteristic. These can be selected according to the application.

Single time constant characteristic

This characteristic is used to protect cables, dry type transformers and capacitor banks. The single constant thermal characteristic is given by the equation:

$$T_{op} = \tau \times \ln \frac{\left(\frac{I_{phase}}{k.I_{pickup}}\right)^2 - \theta(t-1)}{\left(\frac{I_{phase}}{k.I_{pickup}}\right)^2 - \theta}$$

The relay will continuously calculate the thermal capacity as a percentage of the total thermal capacity. The thermal capacity is calculated as follows:

$$\theta = \left(\frac{I_{phase}}{k.I_{pickup}}\right)^2 - \left[\left(\frac{I_{phase}}{k.I_{pickup}}\right)^2 - \theta(t-1)\right] \times e^{\frac{\Delta t}{\tau_1}}$$

Where:

- θ (t) = Cable thermal capacity (%) at time t
- θ (t-1) = Cable thermal capacity (%) at time t-1
- I_{phase}/I_{pickup} = Ratio between the actual load current and the pickup setting.
- k = overload factor, a setpoint ***k-Factor***, settable between 1 and 1.5
- Δt/τ = Time step Δt divided by the heating or cooling time constant τ.
- τ = Heating and cooling time constant, usually provided by the manufacturer.

The heating time constant is used when the squared ($I_{Phase}/(k \times I_{Pickup})$) ratio is greater than the thermal capacity θ(t-1) estimated in the previous time step. Otherwise the formula uses the cooling time constant.

When the load current exceeds the (k x PKP setting), and the element picks up. At the same time the thermal capacity will start to increase at a rate depending on the current amplitude, the prior loading condition of the cable and heating time constant. When the thermal capacity exceeds the alarm level, the element will generate an alarm signal that may turn on a programmable LED. The thermal model alarm can be used as a warning for the start of dangerous overloading conditions and can prevent unnecessary tripping. When the thermal capacity exceeds the Trip level (i.e., higher than 100% thermal capacity), the element will generate a Trip signal. The Trip flag will drop out when the Thermal capacity falls below 97%.

Dual time constant characteristic

This characteristic is used to protect equipment such as oil-filled transformers with natural air cooling. The thermal model is similar to that with the single time constant, except that two time constants must be set.

For marginal overloading, heat will flow from the windings into the bulk of the insulating oil. Therefore, at low current, the replica curve is dominated by the long time constant for the oil. This provides protection against a general rise in oil temperature.

For severe overloading, heat accumulates in the transformer windings, with little opportunity for dissipation into the surrounding insulating oil. Therefore, at high current levels, the replica curve is dominated by the short time constant for the windings. This provides protection against hot spots developing within the transformer windings.

Overall, the dual time constant characteristic serves to protect the winding insulation from ageing and to minimise gas production by overheated oil. Note however that the thermal model does not compensate for the effects of ambient temperature change.

The dual time constant thermal characteristic is given by the equation:

$$\theta = \left(\frac{I_{phase}}{k.I_{pickup}}\right)^2 - \left[\left(\frac{I_{phase}}{k.I_{pickup}}\right)^2 - \theta_{0_copper}\right] \times 0.4e^{\frac{\Delta t}{\tau_1}} - \left[\left(\frac{I_{phase}}{k.I_{pickup}}\right)^2 - \theta_{0_oil}\right] \times 0.6e^{\frac{\Delta t}{\tau_2}}$$

where:

- τ1 = heating and cooling time constant of the transformer windings
- τ2 = heating and cooling time constant of the insulating oil

Path: ***Setpoints*** > ***Protection*** > ***Group 1(6)*** > ***Current*** > ***Thermal Overload 1(X)***

FUNCTION

Range: Disabled, Trip, Alarm, Latched Trip, Latched Alarm, Configurable

Default: Disabled

Any setting apart from `Disabled` enables the setting.

CHARACTERISTIC

Range: Single, Dual

Default: Single

This setting determines the operate characteristic for the thermal overload element.

SIGNAL INPUT

Range: dependent upon the order code

Default: CT Bank 1 –J1

This setting provides selection for the current bank input.

PICKUP

Range: 0.050 to 30.000 x CT in steps of 0.001 x CT

Default: 1.000 x CT

This setting sets the pick-up threshold of the thermal characteristic.

Ipickup = Ibase:

This would normally be the maximum full load current.

Ibase

Permissible current of the equipment to be thermally protected (in many cases this is the maximum continuous current for the equipment within its thermal limits).

ALARM

Range: 50.0 to 110.0% in steps of 0.1%

Default: 80.0%

The setting sets the Alarm level for the accumulated thermal capacity above which the element generates an alarm. The Alarm signal can be displayed by the user-programmable LED.

HEAT TIME CONSTANT (τ_{H1})

Range: 3.0 to 600.0 min in steps of 0.1 min

Default: 10.0 min

The time constant is used to compute the thermal capacity when the squared load/Pickup ratio at each time step is greater than the thermal capacity computed in the previous time step.

HEAT TIME CONSTANT (τ_{H2})

Range: 1.0 to 600.0 min in steps of 0.1 min

Default: 5.0 min

This setting sets the heating time constant for dual time constant characteristics.

COOL TIME CONSTANT (τ_{C1})

Range: 1.00 to 6.00 x τ_{H1} in steps of 0.01 x τ_{H1}

Default: 1 x τ_{H1}

The time constant is used to compute the thermal capacity when the squared load/Pickup ratio at each time step is less than the thermal capacity computed in the previous time step.

COOL TIME CONSTANT (τ_{C2})

Range: 1.00 to 6.00 x τ_{H2} *in steps of 0.01 x* τ_{H2}

Default: 1 x τ_{H}

This setting sets the cooling time constant for dual time constant characteristics

K FACTOR

Range: 1.00 to 1.50 in steps of 0.01

*Default: 1.0*0

This setting sets the Overload factor

BLOCK

Range: Off, Any FlexLogic operand

Default: Off

The element is blocked when the operand is asserted.

OUTPUT RELAYS 3 to 7

Range: Operate, Do Not Operate

Default: Do Not Operate

Any, or all, of output relays 3 to 7 can be selected to operate. The operation of the general relays is programmed by the user. Each relay can be selected to become either energized or de-energized when operated, and to operate as latched, self-resetting or pulsed

EVENTS

Range: Enabled, Disabled

Default: Enabled

The selection of the Enabled setting enables the events of the function.

TARGETS

Range: Self-Reset, Latched, Disabled

Default: Self-Reset

The setting is used to define the operation of an element target message. When disabled, no target message is issued upon operation of the element. When set to `Self-Reset`, the target message and LED indication follow the operate state of the element, and self-resets once the operate element condition clears. When set to `Latched`, the target message will remain visible after the element output returns to logic 0 until a RESET command is received by the relay.

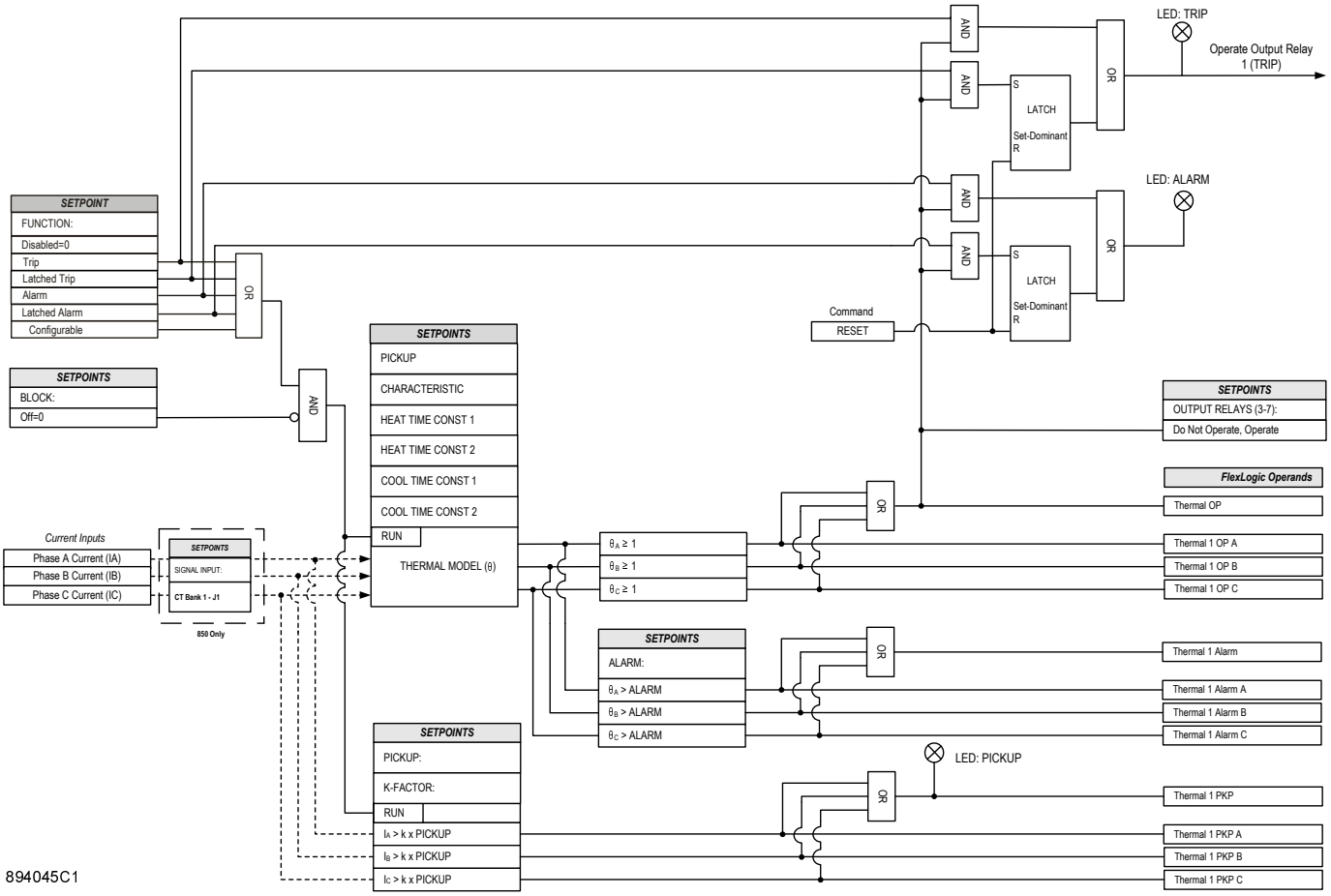

Figure 178: Thermal Overload 1 Protection logic diagram

Figure 179:

The relay will continuously calculate the thermal capacity as a percentage of the total thermal capacity. The thermal capacity is calculated as follows:

$$\theta(t) = \theta(t-1) + \frac{\Delta t}{\tau}\left(\left(\frac{I_{phase}}{I_{pickup}}\right)^2 - \theta(t-1)\right)$$

Where:

- θ (*t*) = Cable thermal capacity (%) at time *t*
- θ (*t*-1) = Cable thermal capacity (%) at time *t*-1
- Δ*t*/τ = Time step Δ*t* divided by the heating or cooling time constant τ
- τ = Heating and cooling time constant, usually provided by the manufacturer
- *Iphase/Ipickup* = Ratio between the actual load current and the pickup setting.

9.2.2 VOLTAGE ELEMENTS OVERVIEW

The 850 feeder protection relay provides the following voltage protection elements:

- Undervoltage curves (UV Curves)
- Phase undervoltage (Phase UV)

- Timed UV (Timed Undervoltage)
- Undervoltage reactive power (UV Reactive Power)
- Auxiliary undervoltage (Auxiliary UV)
- Phase overvoltage (Phase OV)
- Auxiliary overvoltage (Auxiliary OV)
- Neutral overvoltage (Neutral OV)
- Negative sequence overvoltage (Neg Seq OV)

9.2.2.1 PHASE UNDERVOLTAGE PROTECTION (27P)

The Phase Undervoltage element may be used to protect voltage sensitive loads and system components against sustained undervoltage conditions. This element may be used for permissive functions, initiation of the source transfer schemes, and similar functions.

The Phase Undervoltage element may be set as an instantaneous element with no time delay or as a time delayed element which can be configured with definite time, inverse time or FlexCurves. The Phase Undervoltage element has programmable minimum operating threshold to prevent some undesired operation when voltage is not available. The input voltages are the three phase to phase voltages from delta connected VTs (PTs) or three phase to ground voltages from wye connected VTs (PTs).

The settings of this function are applied to each of the three voltage inputs to produce Pickup and Trip flags per voltage input. The UV Pickup flag is asserted, when the measured voltage on any of the three voltage inputs is below the PKP value. The UV Trip flag is asserted if the element stays picked up for the time defined by Pickup time delay or for the time defined by the selected inverse curve / FlexCurve, and number of voltages required for operation matches the number of voltages selected in the setting. The element drops from Pickup without operation if the measured voltage rise above 102 to 103% of the Pickup value, before the time for operation is reached.

The ***MINIMUM VOLTAGE*** setting selects the operating voltage below which the element is blocked (a setting of `0` allows a dead source to be considered a fault condition).

This element may be used to give a desired time delay operating characteristic versus the applied voltage (phase to ground or phase to phase for wye VT connection, or phase to phase for delta VT connection) or as a definite time element. For the inverse time setpoint, the undervoltage delay setpoint defines a family of curves.

Path: ***Setpoints*** > ***Protection*** > ***Group 1(6)*** > ***Voltage Elements*** > ***Phase UV 1(X)***

FUNCTION

Range: Disabled, Trip, Alarm, Latched Alarm, Configurable

Note: Relays with firmware version 4 and later have a `Latched Trip` *option*

Default: Disabled

SIGNAL INPUT

Range: dependent upon the order code

Default: Ph VT Bnk1-J2 or LEA Bnk1-J2 (order code dependent)

This setting provides the selection for the voltage signal input.

MODE

Range: Phase to Ground, Phase to Phase

Default (3.xx): Phase to Ground

Default (4.10): Phase to Phase

This setting provides the selection of phase to ground and phase to phase voltages for a Wye VT connection (phase to phase for delta connected VT connection).

Note:
Only Phase-to-Phase mode should be used when Delta/Single' VT Connection Type and Pseudo Reference Phase-to-Phase is programmed for the Phase VT Connection setting under System/Voltage Sensing.

PICKUP

Range: 0.00 to 1.50 x VT in steps of 0.01 x VT

Default: 1.00 x VT

This setting sets the Phase Undervoltage Pickup level specified per times VT.

For example, a Pickup setting of 0.80 x VT with a 13800:115 VT translates into 11.04kV (or 92V secondary). If the mode selection is phase to phase and the Setpoints/System Setup/Voltage Sensing/Phase VT Connection selection is Wye, the previous example translates to the phase to phase voltage value of 11.04kV x 1.732 = 19.12kV.

MINIMUM VOLTAGE

Range: 0.00 to 1.50 x VT in steps of 0.01 x VT

Default: 0.20 x VT

This setting sets the minimum operating voltage for the undervoltage Pickup level specified per times VT.

For example, a PKP setting of 0.20 x VT with 13800:115 VT translates into 2.76kV (or 23V secondary).

If the Mode setting selection is Phase to Phase and the Setpoints/System Setup/Voltage Sensing/Phase VT Connection selection is Wye, the previous example translates to a

Phase to Phase voltage value of 2.76kV x 1.732 = 4.78kV.

PHASES FOR OPERATION

Range: Any One, Any Two, All Three

Default: Any One

This setting defines the number of voltages required for operation of the Phase UV protection function.

UNDERVOLTAGE CURVES

Range: Definite Time, Inverse Time, FlexCurves A/B/C/D

Default: Definite Time

This setting provides the selection of definite time delay or time delay inverse undervoltage curves, or FlexCurves. In the case of FlexCurves, the voltage ratio used is reversed. Refer to the equation and note regarding FlexCurves in the previous section .

PICKUP DELAY

Range: 0.020 to 6000.000 s in steps of 0.001 s

Default: 1.000 s

This setting provides definite time pickup delay.

RESET TIME

Range: 0.000 to 6000.000 s in steps of 0.001 s

Default: 0.000 s

This setting provides selection for dropout time delay used to delay the dropout of the detection of the undervoltage condition.

RESET MODE

Range: Definite Time, Dependent Time

Default: Definite Time

This setting is based on IEC 60255-151 reset characteristics.

If Definite Time is selected, the percentage of elapsed time for the operate timer is memorized for the set reset time. If the pickup condition returns before the reset timer has timed out, the operate time initializes from the memorized value. Otherwise, the memorized value is reset to zero after the reset time times out.

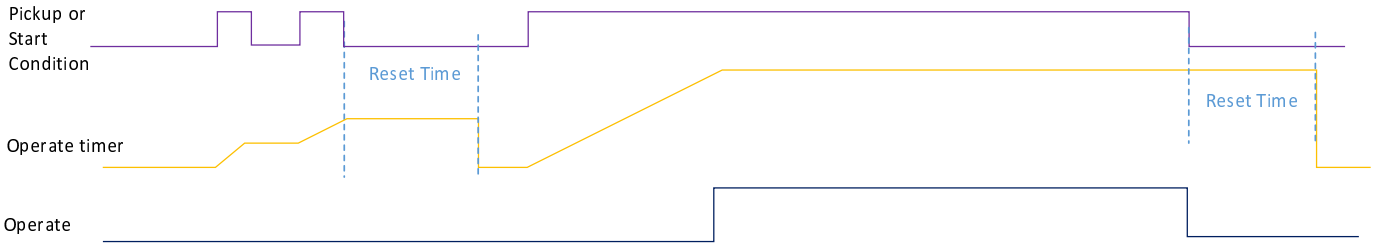

Figure 180: Reset Mode Definite Time

If Dependent Time is selected, the operate timer start decrementing when the pickup condition resets. If the pickup condition returns before the reset timer has timed out, the operate timer again start incrementing. Otherwise, the relay returns to its reset state after the set reset time.

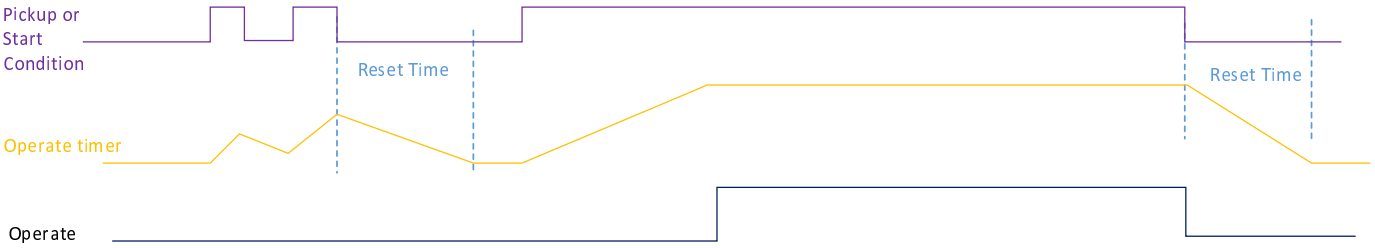

Figure 181: Reset Mode Dependent Time

> *Note:*
> *This setting is hidden when Undervoltage Curve is configured to Definite Time. When Curve is programmed as Definite Time, the Reset Mode is always Definite Time.*

BLOCK

Range: Off, Any FlexLogic operand

Default: Off

OUTPUT RELAY X

Range: Operate, Do Not Operate

Default: Do Not Operate

EVENTS

Range: Enabled, Disabled

Default: Enabled

TARGETS

Range: Disabled, Self-reset, Latched

Default: Self-reset

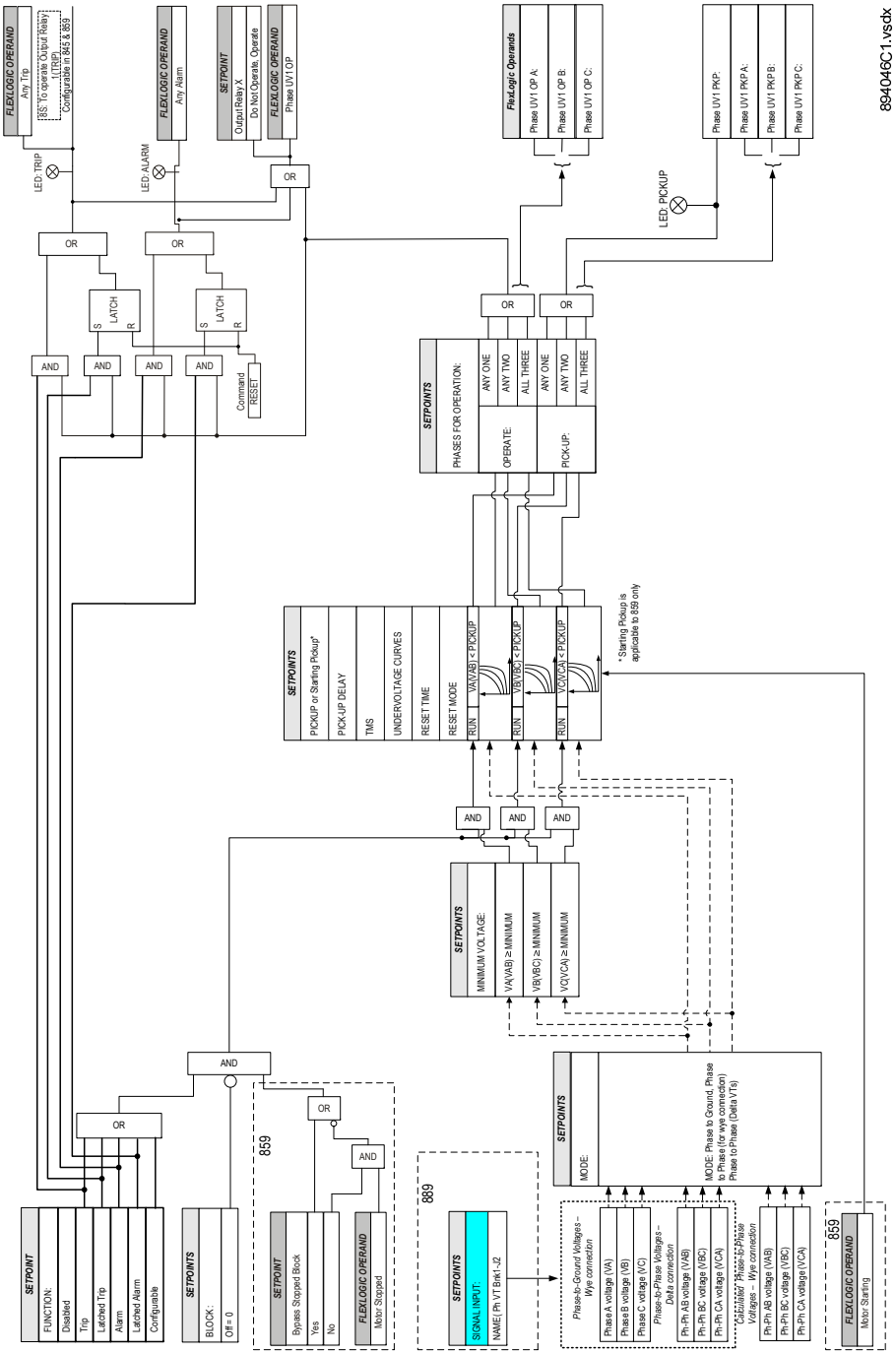

Figure 182: Phase Undervoltage Protection logic diagram

9.2.2.1.1 UNDERVOLTAGE CURVES

The undervoltage elements can be programmed to have an inverse time delay characteristic. The undervoltage delay setpoint defines a family of curves as shown below.

The operating time is given by:

$$T = D/(1 - V/Vpkp)$$

Where:

- T = Operating Time
- D = Undervoltage ***PICKUP DELAY*** setpoint (for D = 0.00 operates instantaneously)
- V = Voltage as a fraction of the nominal VT Secondary Voltage
- V_{pkp} = Undervoltage Pickup Level

The element resets instantaneously if the applied voltage exceeds the dropout voltage. The delay setting selects the minimum operating time of the phase undervoltage.

> *Note:*
> *At 0% of Pickup, the operating time equals the Undervoltage **PICKUP TIME DELAY** setpoint.*

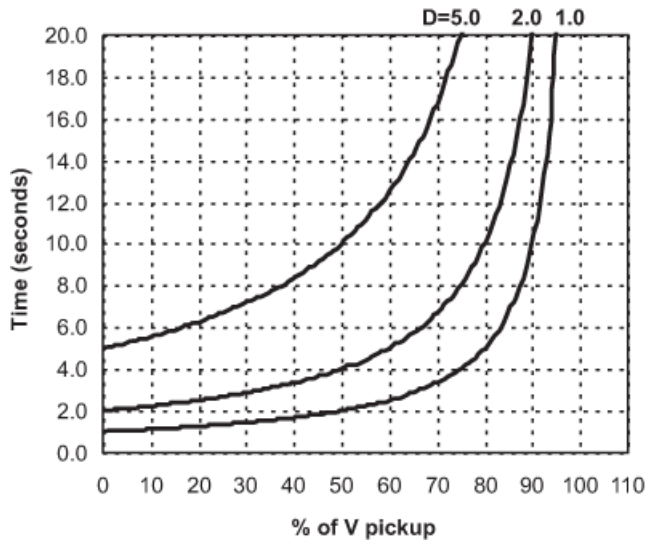

Figure 183: Inverse Time Undervoltage Curves

If FlexCurves are selected, the operating time determined based on following equation:

$$T = \text{FlexCurve}\ (Vpkp / V)$$

> *Note:*
> *FlexCurve reverses the ratio of voltages. The ratio of set pickup value to the measured voltage.*

Example: For a Pickup set to 0.9 x VT, when the measured voltage is 0.82 x VT, the ratio would be 0.9/0.8 = 1.1, therefore in the FlexCurve, the corresponding Trip time setting entry is at 1.1 x PKP (not at 0.82 x PKP). On the other hand, when the measured voltage is 1 x VT, the ratio is 0.9/1 = 0.9, therefore, in the FlexCurve, the corresponding Reset time entry is at 0.9 x PKP.

9.2.2.2 TIMED UNDERVOLTAGE PROTECTION (27T)

The relay provides one Timed Phase Undervoltage (UV) protection element per protection group. This element may be used for protection against transient voltage drops and low voltage ride through applications.

In certain regions of the world, the power plants must meet certain requirements of grid support. In case of a voltage drop, the power plants are sometimes required to continue supporting the grid and not be disconnected from the grid. Therefore, a conventional phase undervoltage protection may not be adequate for such scenarios. The Timed Undervoltage element can be set as a time dependent element which can be programmed with ten configurable points that make up its characteristics curve. The configurable curve allows the relay to continue the grid support for brief voltage drops and operate for voltage drops that enter the operate region of the configurable curve.

Additionally, the element provides a counter based protection which counts the number of transient voltage drops and trips according to the provided threshold for the given time window. This counter based logic is functional only if the overall element is enabled. The counter mode can be enabled/disabled and it runs in parallel to the configurable characteristics based protection. The Timed Undervoltage element has programmable minimum operating threshold to prevent some undesired operation when voltage is not available. The input voltages are the three phase to phase voltages from delta connected VTs (PTs) or three phase to ground voltages from wye connected VTs (PTs).

The settings of this function are applied to each of the three voltage inputs to produce pickup and trip flags per voltage input. The UV pickup flag is asserted, when the measured voltage on any of the three voltage inputs is below the PKP value and deserted when it reaches above the dropout level. The Timed UV 1 Trip flag is asserted if the element stays picked up for the time defined by curve, and number of voltages required for operation matches the number of voltages selected in the setting.The minimum voltage setting selects the operating voltage below which the element is blocked.

Path: ***Setpoints*** > ***Protection*** > ***Group 1(6)*** > ***Voltage Elements*** > ***Timed UV 1(X)***

FUNCTION

Range: Disabled, Trip, Alarm, Latched Alarm, Configurable

Note: Relays with firmware version 4 and later have a `Latched Trip` *option*

Default: Disabled

SIGNAL INPUT

Range: dependent upon the order code

Default: Ph VT Bnk1-J2 or LEA Bnk1-J2 (order code dependent)

This setting provides the phase VTs input selection.

MODE

Range: Phase to Ground, Phase to Phase

Default: Phase to Ground

This setting provides the selection of phase to ground and phase to phase voltages for a Wye VT connection (phase to phase for delta connected VT connection).

> *Note:*
> *Only Phase to Phase mode shall be selected when Delta is programmed for the Phase VT Connection setting under System/ Voltage Sensing.*

PHASES FOR OPERATION

Range: Any One, Any Two, All Three

Default: Any One

This setting defines the number of voltages required for operation of the Timed UV protection function.

PICKUP

Range: 0.00 to 1.50 x VT in steps of 0.01 x VT

Default: 0.90 x VT

This setting sets the phase Undervoltage pickup level specified as percent VT. For example, a Pickup setting of 0.90xVT with 13800:115 VT translates into 12.42kV (or 103.5V secondary). If the Mode selection is Phase to Phase and Setpoints/ System Setup/ Voltage Sensing/ Phase VT Connection selection is Wye, the previous example will translate to the Phase to Phase voltage value of 12.42kV x 1.732 = 21.51kV.

DROPOUT

Range: 102.00 to 150.00 %PKP in steps of 0.001 %PKP

Default: 102.00 %PKP

This setting sets the phase Undervoltage dropout level specified as a percentage of Pickup. For example, a Dropout setting of 102 %PKP with 0.90 x VT as pickup and 13800:115 VT translates into 1.02 x 12.42kV = 12.67kV (or 105.57V secondary). If the Mode selection is Phase to Phase and Setpoints/System Setup/Voltage Sensing/Phase VT Connection selection is Wye, the previous example will translate to the Phase to Phase voltage value of 12.67kV x 1.732 = 21.94kV.

DROPOUT DELAY

Range: 0.000 to 6000.000 s in steps of 0.001 s

Default: 0.000 s

This setting provides a definite time dropout delay. Instantaneous operation is selected by a dropout time delay setting of 0.000 s.

MINIMUM VOLTAGE

Range: 0.00 to 1.50 x VT in steps of 0.01 x VT

Default: 0.20 x VT

This setting sets the minimum operating voltage for undervoltage pickup level specified as percent of VT. For example, a minimum voltage setting of 0.20x VT with 13800:115 VT translates into 2.76kV (or 23V secondary). If the Mode selection is Phase to Phase and Setpoints/ System Setup/ Voltage Sensing/ Phase VT Connection selection is Wye, the previous example will translate to a Phase to Phase voltage value of 2.76kV x 1.732 = 4.78kV.

COUNTER MODE

Range: Disabled, Enabled

Default: Disabled

This setpoint enables the counter based undervoltage protection. With this setting enabled, define the number of tolerated voltage drops and the total time window for which these voltage drops are allowed.

VOLTAGE DROPS

Range: 1 to 10 in steps of 1

Default: 2

This setpoint indicates the number of transient voltage drops the relay can tolerate within the time allocated for the voltage drops. If the number of transient voltage drops exceeds the defined setting within the time defined for the voltage drops, a trip is issued. This setting can be coordinated with recloser shot settings.

> *Note:*
> *This setting is only functional if the Counter Mode setting is set to Enabled.*

TIME FOR VOLTAGE DROPS

Range: 0.000 to 600000.000 s in steps of 0.001 s

Default: 2.000 s

This setting indicates the total time window for which a set number of voltage drops are allowed before the element issues a time-independent undervoltage trip. If the number of transient voltage drops exceeds the

defined setting within the time defined for the voltage drops, a time-independent undervoltage trip is issued. This is not a sliding time window; the time window jumps from one set of time to the next.

> *Note:*
> *This setting is only functional if the Counter Mode setting is set to Enabled.*

CURVE LIMIT 1(10)

Range: 0.00 to 1.50xVT in steps of 0.01xVT

Default: 0.00xVT

This setting provides the configurable characteristic curve operating limit for the associated operating time. The curve limit should be equal or in an increasing order for each consecutive point. For example, if point 4 is at 0.3xVT, point 5 should be greater than or equal to 0.3xVT.

CURVE TIME 1(10)

Range: 0.000 to 600000.000 s in steps of 0.001 s

Default: 2.000 s

This setting provides the configurable characteristic curve operating time for the associated operating limit. The curve time should be set in an increasing order. For example, point 1 should start at 0.000s and then point 2 should be at 0.150s.

> *Note:*
> *The setting Curve Time 1 should always begin with 0.000 s. All the progressive curve timings should be in the increasing order. If the curve is not configured properly, the element may not operate as desired.*

BLOCK

Range: Off, Any FlexLogic operand

Default: Off

The Timed UV will be blocked, when the selected operand is asserted.

OUTPUT RELAY X

Range: Operate, Do Not Operate

Default: Do Not Operate

EVENTS

Range: Disabled, Enabled

Default: Enabled

TARGETS

Range: Disabled, Self-Reset, Latched

Default: Self-Reset

The selection of the Disabled setting disables the targets of Timed UV function. In self-reset mode, the targets remain active until function drops out. In latched mode, the target maintains the set state until deactivated by a reset command.

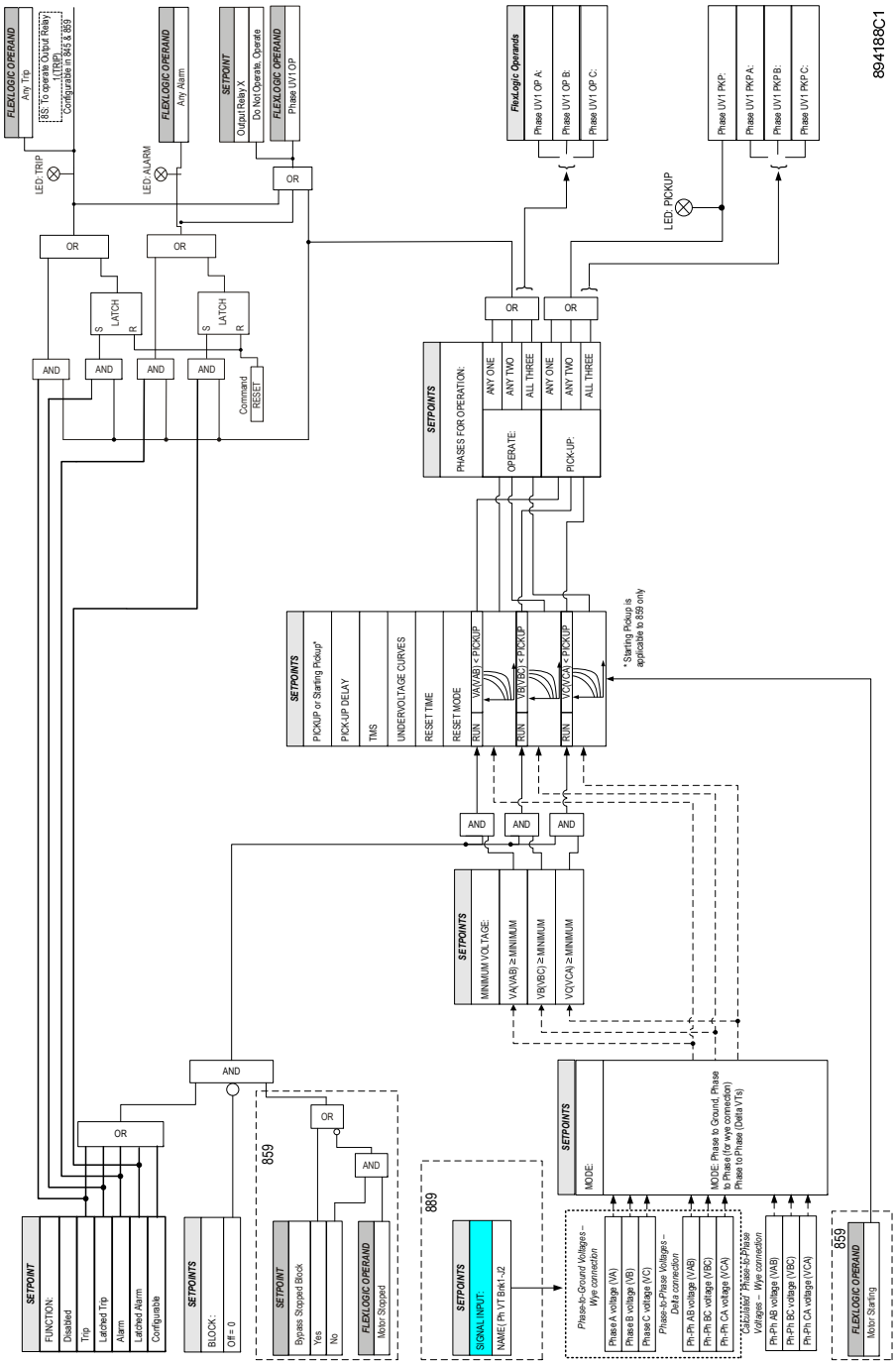

Figure 184: Timed Undervoltage Protection logic diagram

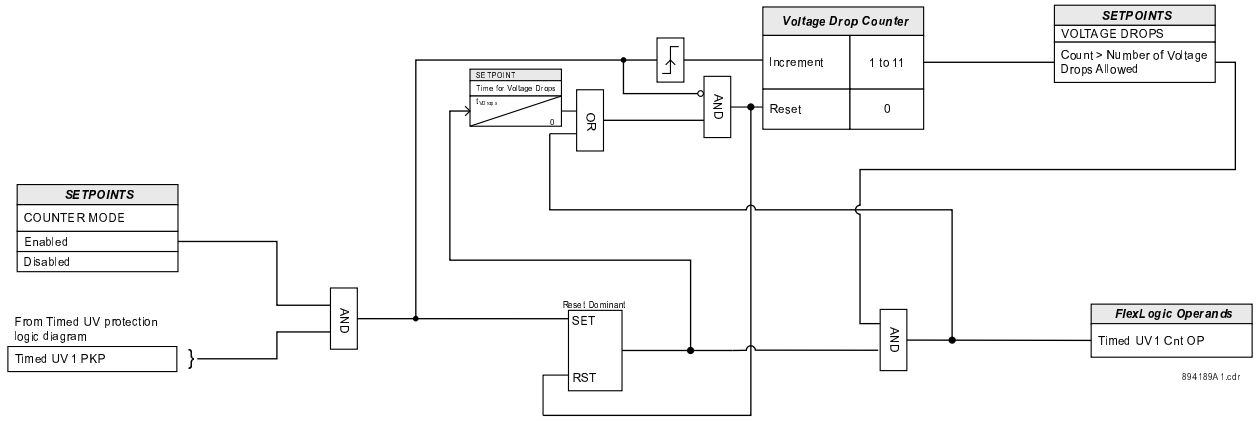

Figure 185: Counter Based Timed Undervoltage Protection logic diagram

Logic Explanation for System Scenarios

For the logic shown in the preceding logic diagrams, the sample system scenarios are explained in Case1, 2, and 3 respectively.

Case 1

Behavior when the element trips by entering the operating region of the configurable characteristic curve. The element operates due to the trip time defined by the curve. The sample settings and the expected behavior are shown here.

Setting	Value
Curve Settings:	As shown in the red characteristic curve
Pickup:	0.90 x VT
Dropout:	105.5 % of PKP (0.95 x VT)
Voltage Drops:	2

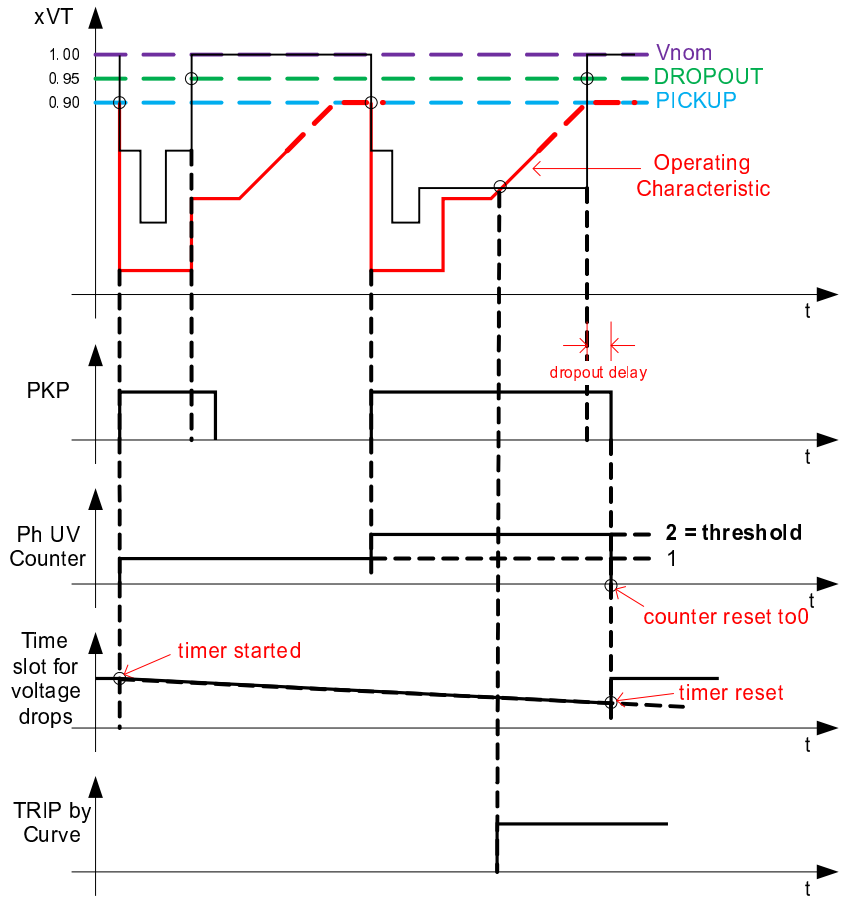

Figure 186: System behavior from Case 1

Case 2

Behavior when the element trips by exceeding the undervoltage count threshold. The element operates due to the voltage drop counter exceeding the programmed number of voltage drops. The sample settings and the expected behavior are shown here.

Setting	Value
Curve settings	As shown in the red characteristic curve
Pickup:	0.90 x VT
Dropout:	105.5 % of PKP (0.95 x VT)
Voltage Drops:	2

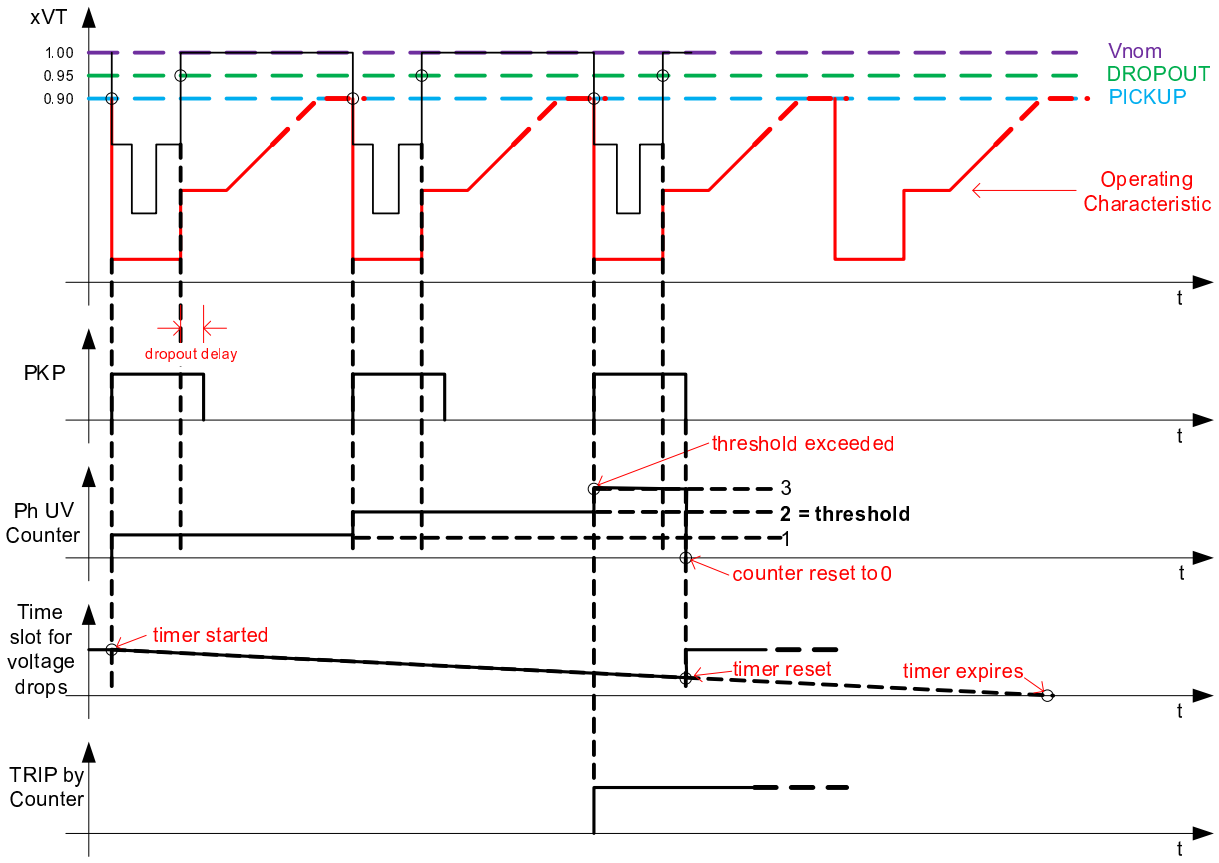

Figure 187: System behavior from Case 2

Case 3

Behavior when the element does not trip even when there are multiple voltage drops however all within the safe range of the characteristic curve. The time window for voltage drops is a jumping time window from one set of time to another. It is not a sliding time window. Hence, there is no Trip observed because the time for voltage drop expires before the programmed threshold could be reached. The timer resets before the next voltage drop. The sample settings and the expected behavior are shown below here.

Setting:	Value
Curve settings	As shown in the red characteristic curve
Pickup:	0.90 x VT
Dropout:	105.5 % of PKP (0.95 x VT)
Voltage Drops:	2

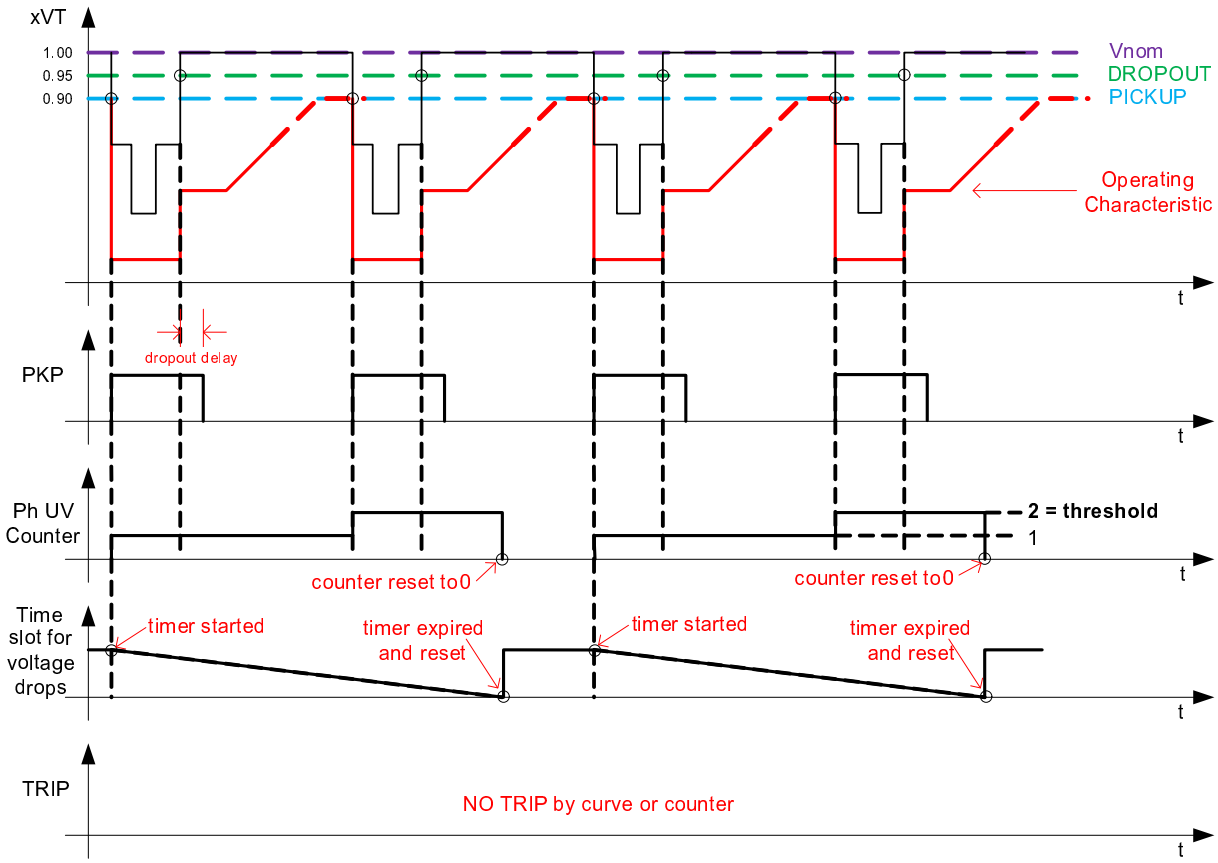

Figure 188: System behavior from Case 3

Application Example for Voltage Ride Through

In some regions, generators/energy resources may be required to remain interconnected (i.e. ride- through) during system disturbances for a specified time duration. This requirement is referred to as dynamic network support or Low Voltage Ride Through (LVRT). Electricity regulatory bodies may have standards for LVRT and give operating characteristics – examples of this are shown in the following figure, see (A) German BDEW and (B) North American NERC.

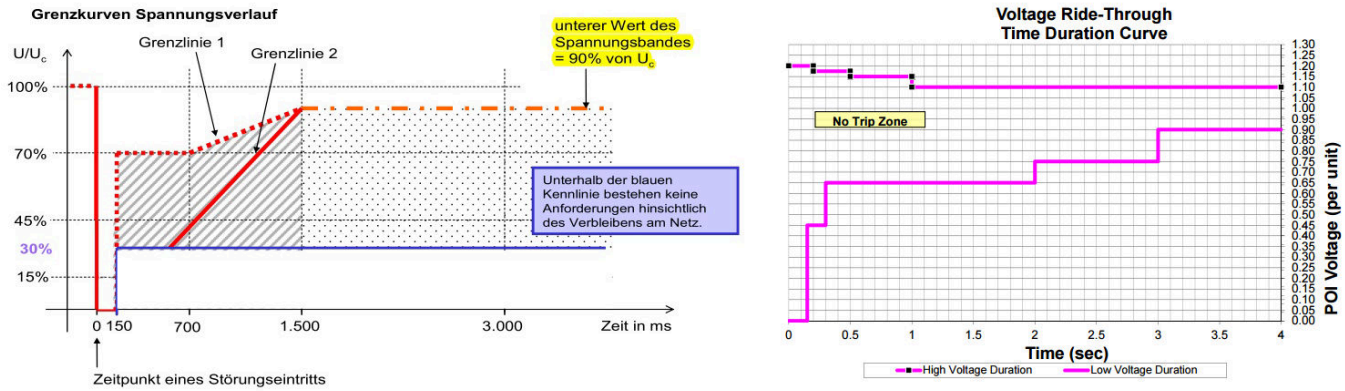

(A) German BDEW (B) North American NERC

Figure 189: Examples of operating characteristics for LVRT

In such low voltage conditions, the protection devices are required to not trip, and the energy resource can continue to support the grid under transient low voltages. To meet these requirements, the configurable curve points can be used to create the characteristic curve for time-dependent undervoltage protection. If the voltage goes below the pickup level, the pickup event is issued along with the LED. If the measured voltage rises above the dropout level before the time for operation is reached, the element drops out from pickup. If the voltage drop exceeds the time specified by the configurable curve, a trip is issued by the timed undervoltage element. The following figure shows the sample characteristics (C) and the equivalent curve settings (D) for it.

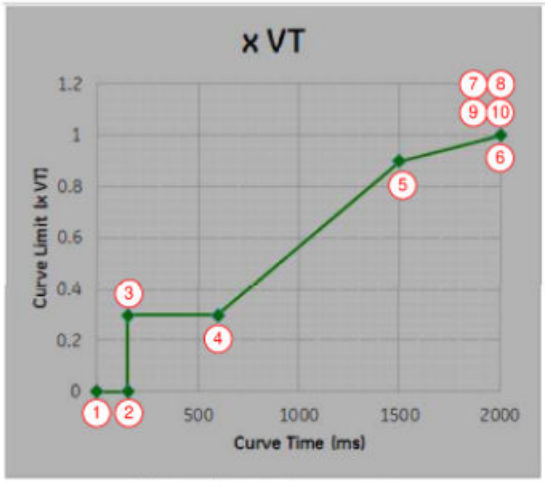

(C) Sample LVRT Characteristics

Item Name	Value	Unit
Curve Limit 1	0.00	x VT
Curve Time 1	0.000	s
Curve Limit 2	0.00	x VT
Curve Time 2	0.150	s
Curve Limit 3	0.30	x VT
Curve Time 3	0.150	s
Curve Limit 4	0.30	x VT
Curve Time 4	0.600	s
Curve Limit 5	0.90	x VT
Curve Time 5	1.500	s
Curve Limit 6	1.00	x VT
Curve Time 6	2.000	s
Curve Limit 7	1.00	x VT
Curve Time 7	2.000	s
Curve Limit 8	1.00	x VT
Curve Time 8	2.000	s
Curve Limit 9	1.00	x VT
Curve Time 9	2.000	s
Curve Limit 10	1.00	x VT
Curve Time 10	2.000	s

(D) Equivalent Curve Points

Figure 190: Sample LVRT characteristics and Equivalent curve points

Counter based undervoltage protection

The Counter based undervoltage protection works in parallel to the Timed undervoltage protection. When this mode of protection is enabled, every undervoltage pickup event increments the counter by one. Simultaneously, a reset-dominant latch is activated with the timer that counts down the total time for allowed transient voltage drops as programmed in the Voltage Drops setting. Every subsequent undervoltage pickup event increments the counter by one as long as the Time for Voltage Drops time is active. If the number of voltage drops exceeds the programmed threshold value before the total time allowed for voltage drop expires, a trip (Timed UV 1 Cnt OP) is issued.

The counter and timer are both reset if there is no timed undervoltage pickup and one of these two conditions occurs:

1. A trip signal is issued due to the counter exceeding the programmed threshold for the number of voltage drops
2. Total time for allowed voltage drop expires without reaching the programmed threshold for number of voltage drops

Caution:
The curve time needs to be set to progressively increasing. If the curve times are not set to progressively increasing, the points are sorted by time and that new sorted curve is used. If the curve limits are not set to progressively increasing, there is a possibility of having multiple operating points. In this case, the lower timed operating point will be put ahead of the higher operating time and the lower timed operating point is used for operation.

Point A is used for Operation time

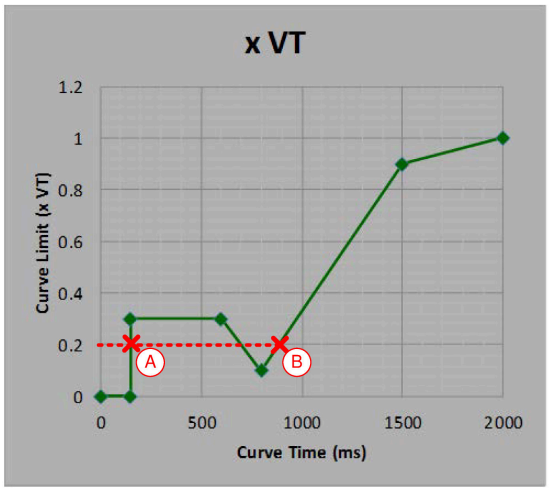

Points

Point	Time	Limit
1	0	0
2	150	0
3	150	0.3
4	600	0.3
5	800	0.1
6	1500	0.9
7,8,9,10	2000	1

In this case, there are two operating points for the same voltage level. The point with lower time (point A in this case) will be used for operation.

Points sorted by Time

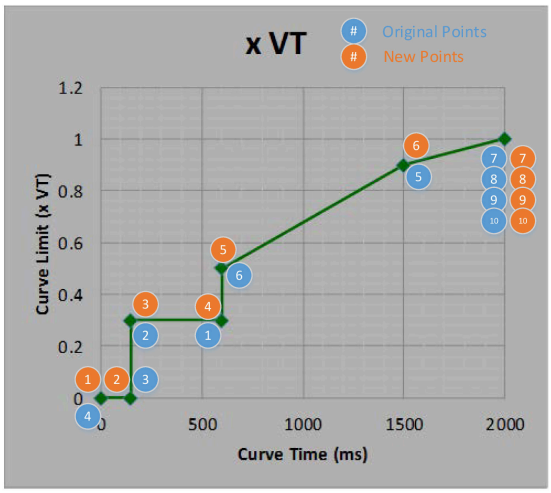

Points

Point	Time	Limit
1	600	0.3
2	150	0.3
3	150	0
4	0	0
5	1500	0.9
6	600	0.5
7,8,9,10	2000	1

In this case, the points are not sorted. Upon saving the settings, the points will get sorted by time to generate the curve.

Figure 191: Generated curves with unsorted and sorted points

9.2.2.3 UV REACTIVE POWER (27Q)

More and more distributed energy resources (DER) are fitted in the MV grid. The amount of controllable power reserve (active and inductive reactive power) by means of large-scale conventional plants is decreasing. Reactive

power is used to maintain mains voltage stability. Faults in the grid, increasing load with reactive power requirements and changes within the network may lead to mains voltage drops. In the event of severe voltage drops in several grid sections, such voltage instability may cause a collapse of the mains voltage by means of cutting the power supply (blackout).

Protection equipment is of considerable importance for secure and reliable operation of networks, connection facilities and generating plants. National grid codes and regulations require that DER units feeding into MV grid must support the mains voltage of a network failure. Therefore, the purpose of voltage and frequency protection units at machine level is to disconnect the generating units from the grid in case of faults. If a voltage drops and an inductive, reactive power flow in the direction towards the generating unit are detected at the network connection point simultaneously, then the affected generating unit will be switched off (disconnecting the generator circuit breaker).

After an unsuccessful attempt to disconnect the generating unit, the whole DER plant will be switched off by the circuit breaker at the network connection point.

The UV Reactive Power element consists of a protection function and generating unit restoration function.

Protection Function

UV reactive power protection function operates after a configurable time delay (programmed as Pickup Delay) as soon as:

- all the phase voltages fall below the set voltage level, programmed as Pickup Voltage, and
- the measured positive sequence current I1 exceeds the current supervision level, programmed as Curr Superv Level, and
- the measured reactive power exceeds the level programmed as Pickup Vars.

Restoration Function

The restoration function can send the closing command to the generating unit CB (circuit breaker) when:

- all the phase voltages are above the minimum voltage level, programmed as Min Voltage, and
- frequency is within the minimum and maximum frequency range, programmed as Min Frequency and Max Frequency respectively, and
- if Synch Supervision is programmed as ON, it permits the closing of the breaker by asserting Synch 1 Close Perm operand.

The mains voltage may not necessarily have measured at the network connection point. According to the above-mentioned protective functions, re-closing of the generator CB shall only take place after the set time delay programmed as Restore Delay.

To the extent that the DER is disconnected from the grid at the network connection point, the individual generating units are shut down, too. Consequently, re-closing of the CB at the network connection point does not require any mains voltage measurement. Re-closing is done manually.

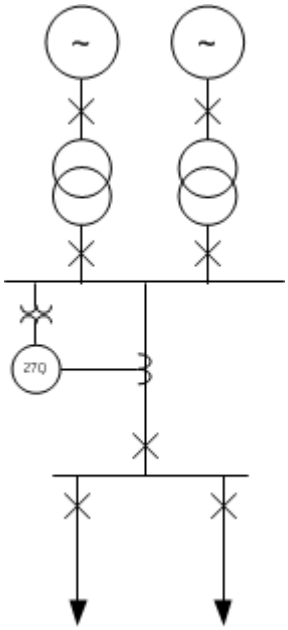

Figure 192: Example of UV Reactive Power (27Q) applied for the generating feeder

> *Note:*
> *UV Reactive Power 1 (2 or 3) are associated with Breaker 1 and UV Reactive Power 4 (5 or 6) are associated with Breaker 2. When the restoration function is enabled, respective closing relays are used depending on the UV Reactive Power element instance.*

Path: ***Setpoints*** > ***Protection*** > ***Group 1(6)*** > ***Voltage*** > ***UV Reactive Power 1(X)***

FUNCTION

Range: Disabled, Trip, Alarm, Latched Alarm, Configurable

Note: Relays with firmware version 4 and later have a `Latched Trip` *option*

Default: Disabled

This setting provides the selection for the Phase to ground and Phase to phase voltages for a Wye VT connection (phase to phase for delta connected VT connection.

SIGNAL INPUT

Range: Power 1, Power 2

Default: Power 1

This setting provides the power source selection. The selection for power comes from the power sensing settings in system setup.

When Signal Input is programmed as Power 1, the element uses actual metering value Pwr1 Reactive (Metering \Power 1). When the Signal Input is programmed as Power 2, element uses actual metering value Pwr2 Reactive (Metering\Power 1).

VOLTAGE MODE

Range: Phase-to-ground, Phase-to-phase

Default: Phase-to-phase

This setting provides selections for Phase to ground and Phase to phase voltages for a Wye VT connection (phase to phase for delta connected VT connection).

Note:
Setpoint Voltage Mode is only applicable when Phase VT Connection (under System > Voltage Sensing > Ph VT Bnk1-J2) selection is Wye. This setting is hidden when the Phase VT Connection selection is Delta/Single and Pseudo Reference isPhase-To-Phase..

PICKUP VOLTAGE

Range: 0.00 to 1.50 x VT in steps 0.01

Default: 0.85 x VT

This setting specifies the phase undervoltage pickup level specified per times VT.

For example, a Pickup setting of 0.85 x VT with 13800:115 VT translates into 11.730kV (or 97.5V secondary).

If the Voltage Mode selection is Phase-phase and the Phase VT Connection (under System/Voltage Sensing/Ph VT Bnk1-J2) selection is Wye, the previous example will translate to the phase-phase voltage value of 11.730kV x 1.732 = 20.31kV

PICKUP VARS

Range: 1 to 65000 kvar in steps of 1

Default: 25 kvar

This setting specifies the pickup threshold for reactive power of the undervoltage/reactive power function.

PICKUP VARS

Range: 1 to 65000 kvar in steps of 1

Default: 25 kvar

This setting specifies the pickup threshold for reactive power of the undervoltage/reactive power function.

CURR SUPERV LEVEL

Range: 0.00 to 0.20 x CT in steps of 0.01

Default: 0.10 x CT

This setting sets the positive sequence current I1 pickup level.

This setting specifies the minimum positive sequence current level that inhibits this element. If the positive sequence current is below this setting, the element is blocked.

As soon as the voltage falls below the Pickup Voltage and the positive sequence current exceeds the Min Current and the reactive power falls below (when Var Direction = Forward) or exceeds (when Var Direction = Reverse) the set value of Min Var, then the UV Reactive Protection pickups.

VAR DIRECTION

Range: Forward, Reverse

Default: Forward

This setting specifies the flow direction of the watts(P) and Vars(Q), during normal and fault situations, as seen from the grid or generator viewpoint.

When this value is programmed as Forward:

During normal operation P > 0 and Q > 0; which means the generator delivers active and inductive reactive power to the grid.

During fault situation P > 0 and Q < 0; which means the generator delivers active power to the grid and takes the inductive reactive power of the grid. Protection trips, if the reactive power measurement value is negative (Q < 0) and the absolute value of measured reactive power exceeds the level programmed as Pickup Vars.

When this value is programmed as Reverse:

During normal operation P < 0 and Q < 0; which means the grid takes the active and inductive reactive power of the generator.

During a fault situation: P < 0 / P > 0 and Q > 0; which means the grid takes (or delivers) the active power of (or to) the generator and the grid delivers inductive reactive power to the generator. Protection trips, if the reactive power measurement value is positive (Q > 0) and the absolute value of measured reactive power exceeds the level programmed as Pickup Vars.

PICKUP DELAY

Range: 0.100 to 600.000 s in steps of 0.001

Default: 0.500 s

This setting provides a definite time dropout delay for the trip function.

DROPOUT DELAY

Range: 0.000 to 600.000 s in steps of 0.001 s

Default: 0.000 s

This setting provides a definite time dropout delay. Instantaneous operation is selected by a dropout time delay setting of 0.000 s.

RESTORE FUNCTION

Range: Disabled, Close, Configurable

Default: Disabled

This setting enables the generator CB restoration function.

The **Close** relay only operates when the ***Close*** function is selected.

MIN VOLTAGE

Range: 0.05 to 1.50 x VT in steps of 0.01

Default: 0.95 x VT

Reclosing of the generator circuit breaker requires that the voltage measurement at the network connection point must exceed the Minimum Voltage level.

MIN FREQUENCY

Range: 20.00 to 65.00 Hz in steps of 0.01

Default: 59.00 Hz

MAX FREQUENCY

Range: 20.00 to 65.00 Hz in steps of 0.01

Default: 60.50 Hz

Re-closing of the generator circuit breaker requires that the frequency measurement must lie within the band defined by the Min Frequency and Max Frequency setpoints.

MIN CURRENT

Range: 0.00 to 1.00 x CT in steps of 0.01

Default: 0.10 x CT

Current that is greater than the minimum current level, as defined by the Min Current setpoint, resets the CB restore command initiated by this element.

RESTORE INITIATE

Range: Off, any FlexLogic Operand

Default: Off

This parameter specifies any input (e.g. trip) which initiates the restoration function for decoupling. When the assigned input drops to zero, it will start the Restore Delay timer and release the command to re-close the generating unit CB. If the assigned input becomes active, the Restore Delay timer resets and the restoring release deactivates.

If more than one input is required to initiate the restoration function, then the FlexLogic builder must be used to build the required logic.

27Q INITIATE

Range: Off, On

Default: Off

When On, this setting allows the initiation of the generating unit CB re-closing from the UV Reactive Power protection function by using the operand UV Var OP.

RESTORE DELAY

Range: 0.00 to 6000.00 s in steps of 0.01

Default: 2.00 s

This value sets the delay time between the voltage restoration and the re-closing of the generating unit CB. This timer starts when inputs (programmed as Restore Initiate and/or 27Q Initiate) drop to zero. If the re-closing delay time has run down and all other conditions for re-closing (see logic diagram) are fulfilled, then the Restore function releases the command to close the CB.

Note:
If the restoration input is activated, the UV Reactive Power Restore function will remain blocked or become reset.

SYNC SUPERVISION

Range: Bypass, Sync 1 Cls Perm, Sync 2 Cls Perm (Dependent upon order code)

Default: Bypass

This setpoint enables synchrocheck supervision. The operation of the UV Reactive Power Restore function can be supervised by the Synchrocheck function (Path: ***Setpoints*** > ***Control*** > ***Synchrocheck 1***). The Synchrocheck function must be enabled and set accordingly. For applications where Synchrocheck and/or dead source check is not needed, Sycn Supervision can be bypassed by setting it to Off.

Note:
If the Sync Supervision is On and the UV Reactive Power Restore function is applied in an application where the breaker is located on radial feeders, or the line is powered by one source only, the Dead Source Perm setpoint from the Synchrocheck menu must not be disabled.

Note:
If the Synchrocheck function is not selected in the order code, this setting is hidden and defaulted to Off.

OUTPUT RELAY X

Range: Operate, Do Not Operate

Default: Do Not Operate.

BLOCK

Range: Off, Any FlexLogic operand

Default: Off

The re-closing can be blocked, when the selected operand is asserted.

EVENTS

Range: Disabled, Enabled

Default: Enabled

The selection of the Enabled setting enables the events of the function.

TARGETS

Range: Disabled, Self-Reset, Latched

Default: Self-Reset

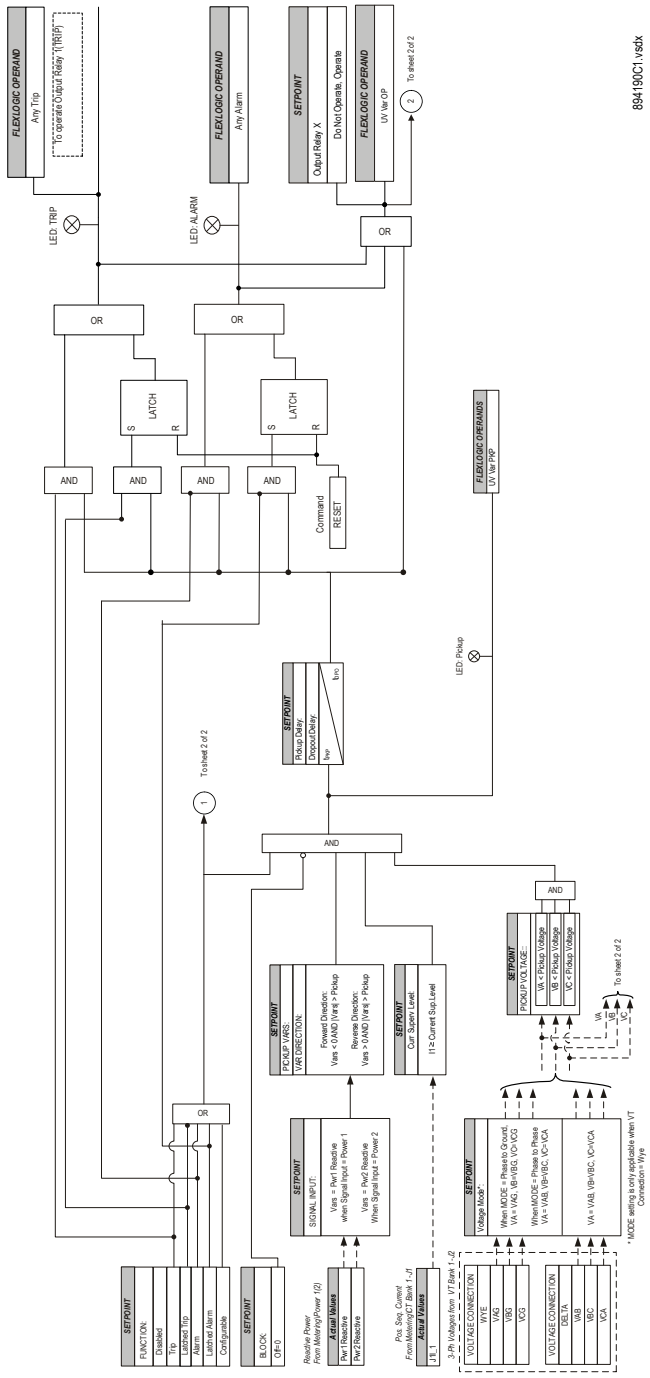

Figure 193: Logic Diagram of UV Reactive Power Protective Function (1 of 2)

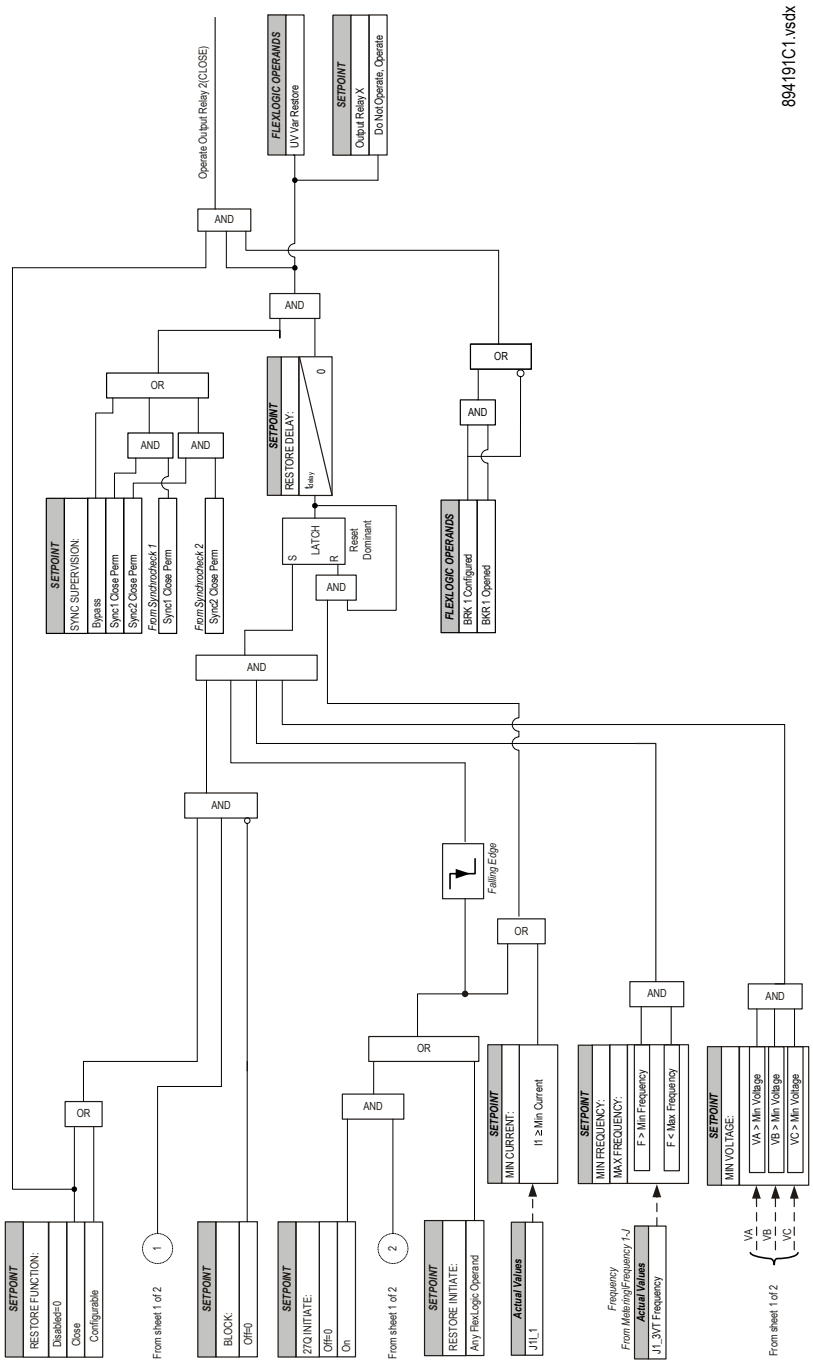

Figure 194: Logic Diagram of UV Reactive Power Protection Function (2 of 2)

9.2.2.4 AUXILIARY UNDERVOLTAGE (27X)

The relay provides two identical Auxiliary Undervoltage (UV) elements per protection group, or a total of 12 elements. Each Auxiliary Undervoltage element may be used to protect voltage sensitive loads and system components against sustained undervoltage conditions. This element may be used for permissive functions, initiation of the source transfer schemes and similar functions.

The Auxiliary Undervoltage element may be set as an instantaneous element with no time delay or as a time delayed element which can be programmed with definite time, inverse time or FlexCurves. The Auxiliary Undervoltage element has a programmable minimum operating threshold to prevent undesired operation when voltage is not available. The input voltage is the auxiliary voltage.

The settings of this function are applied to auxiliary voltage input to produce Pickup and Trip flags. The Auxiliary UV Pickup flag is asserted when the auxiliary input voltage is below the PKP value. The Auxiliary UV Trip flag is asserted if the element stays picked up for the time defined by Pickup time delay or for the time defined by the selected inverse curve/FlexCurve. The element drops from Pickup without operation if the measured voltage rises above 102 to 103% of the Pickup value before the time for operation is reached.

The minimum voltage setting selects the operating voltage below which the element is blocked (a setting of `0` will allow a dead source to be considered a fault condition).

This element may be used to give a desired time-delay operating characteristic versus the applied voltage, or as a definite time element. For the inverse time setpoint, the undervoltage delay setpoint defines a family of curves.

Path: ***Setpoints*** > ***Protection*** > ***Group 1(6)*** > ***Voltage Elements*** > ***Auxiliary UV 1(X)***

FUNCTION

Range: Disabled, Trip, Alarm, Latched Alarm, Configurable

Note: Relays with firmware version 4 and later have a `Latched Trip` *option*

Default: Disabled

SIGNAL INPUT

Range: Ax VT Bnk1-J2

Default: Ax VT Bnk1-J2

This setting provides the selection for the signal input.

PICKUP

Range: 0.00 to 1.50 x VT in steps of 0.01 x VT

Default: 1.00 x VT

This setting sets the Auxiliary Undervoltage Pickup level specified per times VT. For example, a Pickup setting of 0.80 x VT with a 13800:115 VT translates into 11.04kV (or 92V secondary).

MINIMUM VOLTAGE

Range: 0.00 to 1.50 x VT in steps of 0.01 x VT

Default: 0.20 x VT

This setting sets the minimum operating voltage for the undervoltage Pickup level specified per times VT.

UNDERVOLTAGE CURVES

Range: Definite Time, Inverse Time, FlexCurves A/B/C/D

Default: Definite Time

This setting provides the selection of definite time delay or time delay inverse undervoltage curves. In the case of FlexCurves, the voltage ratio is reversed.

PICKUP DELAY

Range: 0.000 to 6000.000 s in steps of 0.001 s

Default: 1.000 s

If *Inverse Time* is selected as an Undervoltage Curve setpoint, the Pickup Delay value is loaded to variable D in the curve formula.

BLOCK

Range: Off, Any FlexLogic operand

Default: Off

OUTPUT RELAY X

Range: Operate, Do Not Operate

Default: Do Not Operate

EVENTS

Range: Enabled, Disabled

Default: Enabled

TARGETS

Range: Disabled, Self-reset, Latched

Default: Self-reset

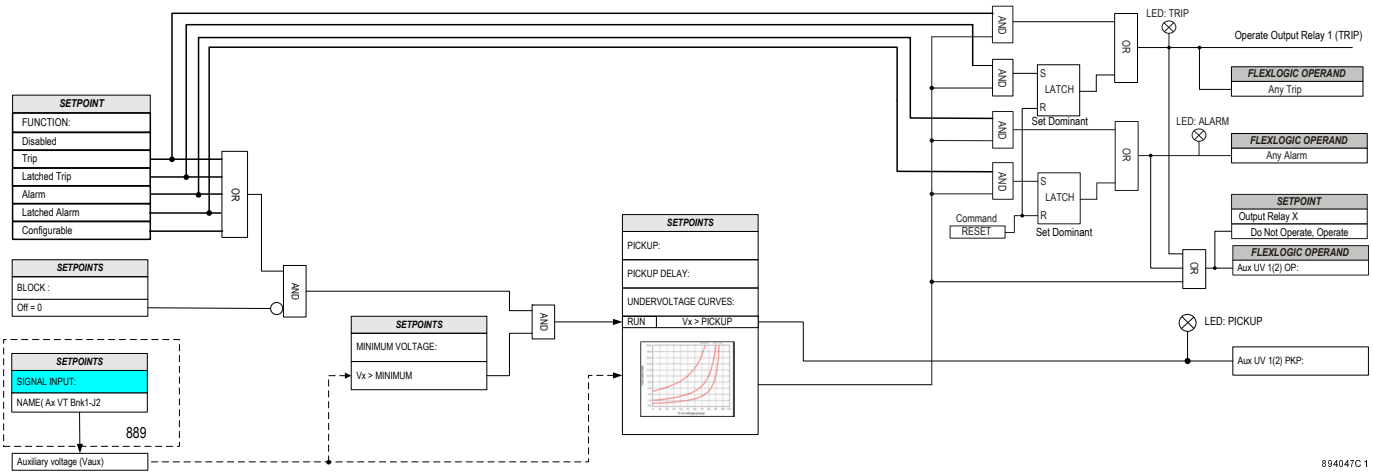

Figure 195: Auxiliary Undervoltage Protection logic diagram

9.2.2.5 PHASE OVERVOLTAGE PROTECTION (59P)

The relay provides two identical Phase Overvoltage (OV) elements per protection group, or a total of 12 elements. Each Phase Overvoltage element may be used to protect voltage sensitive loads and system components against sustained overvoltage conditions. The Phase Overvoltage element may be set as an instantaneous element with no time delay or may be set as a definite time element. The input voltages are the three phase to phase voltages from delta connected VTs or three phase to ground voltages from wye connected VTs.

The settings of this function are applied to each of the three voltage inputs to produce Pickup and Trip flags per voltage input. The OV Pickup flag is asserted when the voltage on any voltage input is above the PKP value. The OV Trip flag is asserted if the element stays picked up for the time defined by the Pickup time delay and that number of voltages required for operation is equal to the number defined by voltages required for the operation setting. The element drops from pickup without operation, if the measured voltage drops below the configured dropout level of the pickup value, before the time for operation is reached. The dropout level can be configured at ***Setpoints > Device > Installation > OV/UV DPO Range***.

Phase Overvoltage elements may be used to protect voltage sensitive loads and system components against sustained overvoltage conditions. The Phase Overvoltage element may be set as an instantaneous element with no time delay or may be set as a definite time element, Inverse Time, or with FlexCurve. The input voltages are the

three phase to phase voltages from delta connected VTs, or the three phase to ground voltages from wye connected VTs.

This element may be used to give a desired time-delay operating characteristic versus the applied voltage or as a definite time element. For the inverse time setpoint, the overvoltage pickup delay setpoint defines a family of curves as shown below.

The operating time is given by:

$$T = D / [(V/V_{pickup})-1] \text{ when } V > V_{pickup}$$

where:

- T = trip time in seconds
- D = Overvoltage Pickup Delay setpoint
- V = actual phase-phase voltage
- V_{pickup} = Overvoltage Pickup setpoint

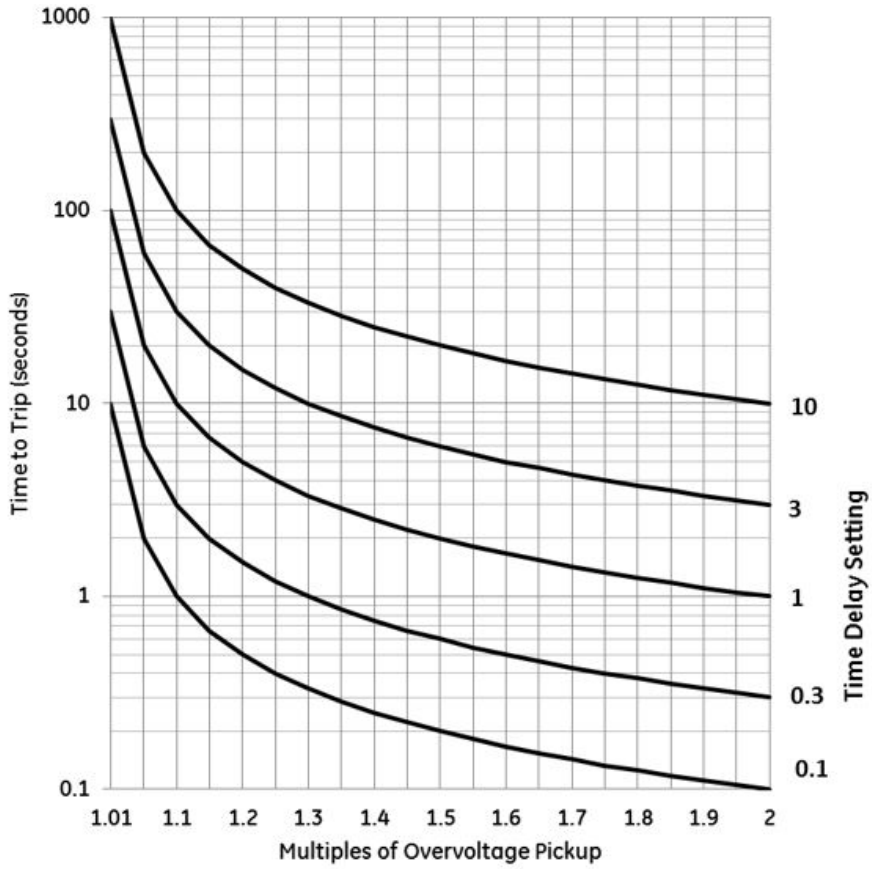

Figure 196: Overvoltage curves

Path: ***Setpoints*** > ***Protection*** > ***Group 1(6)*** > ***Voltage*** > ***Phase OV 1(X)***

FUNCTION

Range: Disabled, Trip, Alarm, Latched Alarm, Configurable

Note: Relays with firmware version 4 and later have a `Latched Trip` *option*

Default: Disabled

SIGNAL INPUT

Range: dependent upon the order code

Default: Ph VT Bnk1-J2 or LEA Bnk1-J2 (order code dependent)

This setting provides the selection for the voltage signal input.

MODE

Range: Phase to Ground, Phase to Phase

Default (3.xx): Phase to Ground

Default (4.10): Phase to Phase

This setting provides the selection of phase to ground and phase to phase voltages for a Wye VT connection (phase to phase for delta connected VT connection).

> *Note:*
> *Only Phase to Phase mode should be selected when Delta/Single VT Connection Type and Pseudo Reference Phase-to-Phase is programmed for the Phase VT Connection setting under **Setpoints** > **System** > **Voltage Sensing**.*

PICKUP

Range: 0.02 to 3.00 x VT in steps of 0.01 x VT

Default: 1.50 x VT

The setting sets the phase overvoltage pickup level to specified per times VT.

For example, a Pickup setting of 1.10 x VT with 13800:115 VT translates into 15.18kV. If the mode selection is phase to phase and ***Setpoints*** > ***System Setup*** > ***Voltage Sensing*** > ***Phase VT Connection*** selection is Wye, the previous example translates to the phase to phase voltage value of 15.18kV x 1.732 = 26.29kV.

PHASES FOR OPERATION

Range: Any One, Any Two, All Three

Default: Any One

The setting defines the number of voltages required for operation of the Phase OV protection function.

CURVE (not used in 859)

Range: Definite Time, Inverse Time, FlexCurve A, FlexCurve B, FlexCurve C, FlexCurve D

Default: Definite Time

This setting provides selection of curves for overvoltage as definite time, inverse time overvoltage curves or FlexCuves.

PICKUP DELAY

Range: 0.000 to 6000.000 s in steps of 0.001 s

Default: 1.000 s

This setting provides definite time pickup delay.

TMS

Range: 0.5 to 100.0 in steps of: 0.5

Default: 1.0

If the Inverse Time is selected as an Curve setpoint, the TMS value is loaded to variable “D” in the curve formula

Note: This TMS setting is visible from setting management, only when 'Curve' setting is selected as IDMT or Inverse Time.

DROPOUT DELAY

Range: 0.000 to 6000.000 s in steps of 0.001 s

Default: 1.000 s

BLOCK

Range: Off, Any FlexLogic operand

Default: Off

OUTPUT RELAY X

Range: Operate, Do Not Operate

Default: Do Not Operate

EVENTS

Range: Enabled, Disabled

Default: Enabled

TARGETS

Range: Disabled, Self-reset, Latched

Default: Self-reset

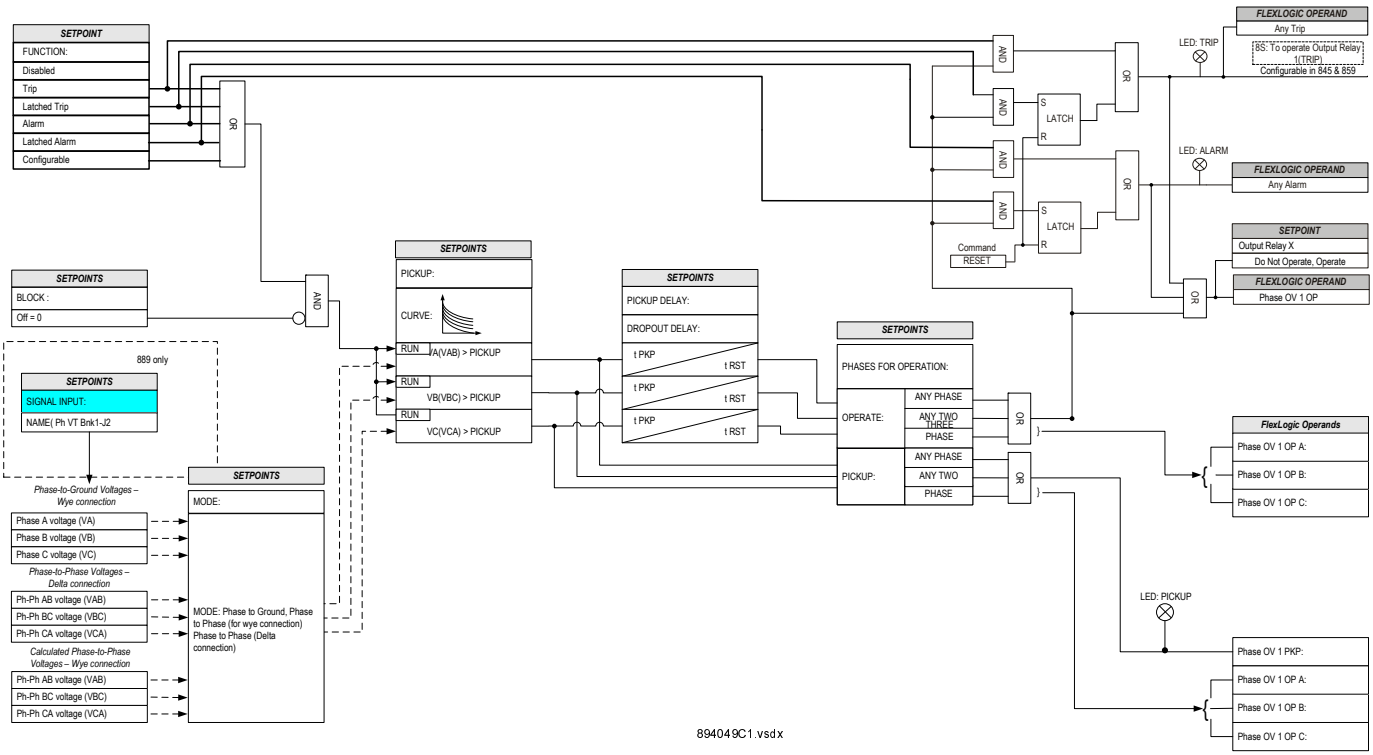

Figure 197: Phase Overvoltage logic diagram

9.2.2.6 AUXILIARY OVERVOLTAGE PROTECTION (59X)

The relay provides one Auxiliary Overvoltage (OV) element per protection group, or a total of 6 elements. Each Auxiliary OV element is used to protect voltage sensitive loads and system components against sustained overvoltage conditions. This element can be used for monitoring zero-sequence voltage (from an "open corner delta" VT connection), permissive functions, the source transfer schemes, restoration and similar functions.

The Auxiliary OV element may be set as an instantaneous element with no time delay or may be set as a definite time element, Inverse Time, or with FlexCurves. The input voltage is the auxiliary voltage.

The settings of the Auxiliary OV Protection function are applied to the auxiliary voltage input to produce pickup and trip flags. The Auxiliary OV pickup flag is asserted, when the voltage on auxiliary input is above the PKP value. The Auxiliary OV trip flag is asserted if the element stays picked up for the time defined by pickup time delay, Inverse Time, or FlexCurves. The element drops from pickup without operation, if the measured voltage drops below 97-98% of the pickup value, before the time for operation is reached.

This element may be used to give a desired time-delay operating characteristic versus the applied voltage or as a definite time element. For the inverse time setpoint, the overvoltage pickup delay setpoint defines a family of curves as shown below.

The operating time is given by:

$$T = D / [(V/V_{pickup}) - 1] \text{ when } V > V_{pickup}$$

Where:

- T = trip time in seconds
- D = Overvoltage Pickup Delay setpoint
- V = actual phase-phase voltage
- V_{pickup}= Overvoltage Pickup setpoint
- The element reset rate is a linear reset time from the threshold of trip.

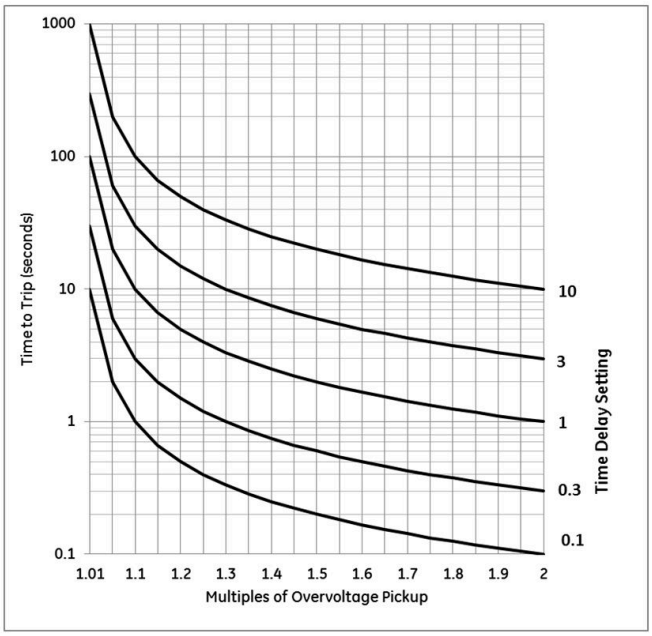

Figure 198: Overvoltage Curves

Path: ***Setpoints*** > ***Protection*** > ***Group 1(6)*** > ***Voltage*** > ***Auxiliary OV***

FUNCTION

Range: Disabled, Trip, Alarm, Latched Alarm, Configurable

Note: Relays with firmware version 4 and later have a `Latched Trip` *option*

Default: Disabled

SIGNAL INPUT

Range: Ax VT Bnk1-J2

Default: Ax VT Bnk1-J2

This setting provides the selection for the signal input.

PICKUP

Range: 0.00 to 3.00 x VT in steps of 0.01 x VT

Default: 1.50 x VT

This setting sets the auxiliary overvoltage pickup level specified per times VT.

For example, a Pickup setting of 1.10 x VT with 13800:115 VT translates into 15.08kV (or 126.5V secondary).

CURVE

Range: Definite Time, Inverse Time, FlexCurves A/B/C/D

Default: Definite Time

This setting provides the selection of curves for the overvoltage as definite time, inverse time overvoltage curves or FlexCurves.

PICKUP DELAY

Range: 0.000 - 6000.000s in steps of 0.001s

Default: 1.000s

DROPOUT DELAY

Range: 0.000 to 6000.000 s in steps of 0.001 s

Default: 1.000 s

This setting provides definite time dropout delay of the operate signal if the Curve setting is selected as Definite Time. An instantaneous reset is provided by dropout time delay setting of 0.000 s.If the selected Curve setting is Inverse Time, the dropout delay value is used to linearly reset the element. If the Curve is selected as a FlexCurve, the reset setpoints of the FlexCurve are used to reset the element.

BLOCK

Range: Off, Any FlexLogic operand

Default: Off

OUTPUT RELAY X

Range: Operate, Do Not Operate

Default: Do Not Operate

EVENTS

Range: Enabled, Disabled

Default: Enabled

TARGETS

Range: Disabled, Self-reset, Latched

Default: Self-reset

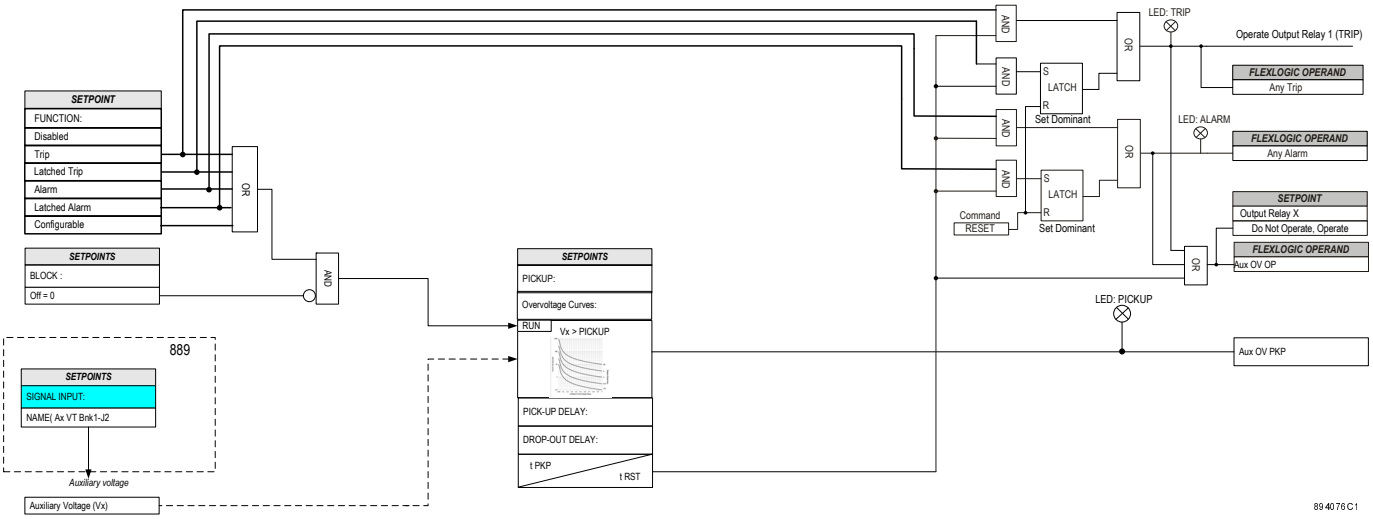

Figure 199: Auxiliary Overvoltage Protection logic diagram

9.2.2.7 NEUTRAL OVERVOLTAGE PROTECTION (59N)

The relay provides one Neutral Overvoltage (Neutral OV, also called Neutral Displacement) element per protection group.

The Neutral Overvoltage element can be used to detect asymmetrical system voltage conditions caused by a ground fault or the loss of one or two phases of the source. The element responds to the system neutral voltage (3V0), calculated from the phase voltages. The nominal secondary voltage of the phase voltage channels entered under ***Setpoints*** > ***System*** > ***Voltage Sensing*** > ***Phase VT Secondary*** is the base used when setting the Pickup level. The Neutral Overvoltage element can provide a time-delayed operating characteristic versus the applied voltage (initialized from FlexCurves A, B, C or D) or can be used as a definite time element. The source voltage assigned to this element must be configured for a phase VT and phase VTs must be wye connected. VT errors and normal voltage unbalance must be considered when setting this element.

> *Note:*
> *The same curves used for the time overcurrent elements are used for Neutral Displacement. When using the curve to determine the operating time of the Neutral Displacement element, substitute the ratio of neutral voltage to Pickup level for the current ratio shown on the horizontal axis of the curve plot.*

The relay provides Neutral Overvoltage protection with independent time delay characteristics. Each stage provides a choice of operate characteristics, where you can select between:

- An IDMT characteristic
- A range of user-defined curves
- DT (Definite Time)

The undervoltage delay setpoint defines a family of curves as shown below.

The Inverse Time characteristics is given by:

$$T = D / [(V/V_{pkp}) - 1]$$

where:

- T = Operating Time
- D = neutral over voltage Pickup Time Delay setpoint (for D = 0.00 operates instantaneously)
- V = Voltage as a fraction of the nominal VT Secondary Voltage
- V_{pkp} = neutral over voltage Pickup Level

If FlexCurves are selected, the same curves used for the time overcurrent elements are used for Neutral Displacement. When using the curve to determine the operating time of the Neutral Displacement element, substitute the ratio of neutral voltage to the pickup level for the current ratio shown on the horizontal axis of the curve plot.

$$T = \text{FlexCurve}(V/V_{pkp})$$

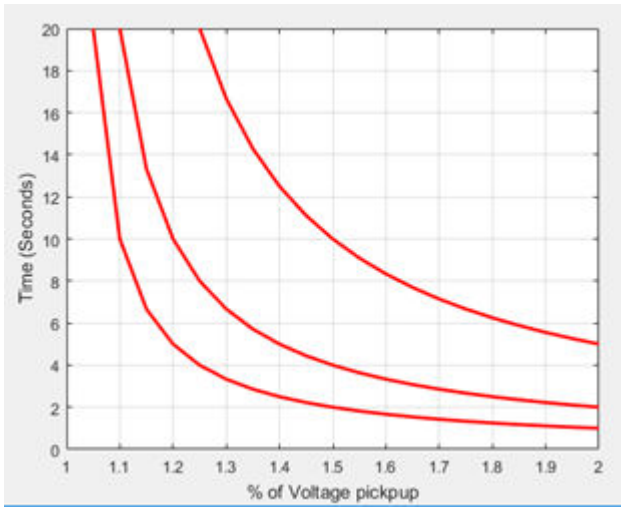

Inverse Time neutral over voltage Curves for varying D

The Neutral Overvoltage feature should be applied with caution. It would normally be applied to give line-to-ground fault coverage on high impedance grounded or ungrounded systems, which are isolated. This constraint stems from the fact that a measurement of 3V0 cannot discriminate between a faulted circuit and an adjacent healthy circuit. Use of a time delayed back-up or alarm mode allows other protections an opportunity to isolate the faulted element first.

The settings of this function are applied to 3V0 calculated from the three phase-to-ground (wye connected VTs) voltage inputs to produce Pickup and Trip flags per 3V0 calculated voltage. The Neutral OV Pickup flag is asserted when the calculated 3V0 voltage is above the PKP value. The Neutral OV Trip flag is asserted if the element stays picked up for the time defined by the selected inverse curve and the magnitude of the 3V0 voltage. The element drops from Pickup without operation, if the calculated voltage drops below 97 to 98% of the Pickup value before the time for operation is reached.

Path: ***Setpoints*** > ***Protection*** > ***Group 1(6)*** > ***Voltage Elements*** > ***Neutral OV 1(X)***

FUNCTION

Range: Disabled, Trip, Alarm, Latched Alarm, Configurable

Note: Relays with firmware version 4 and later have a `Latched Trip` *option*

Default: Disabled

SIGNAL INPUT

Range: dependent upon the order code

Default: Ph VT Bnk1-J2 or LEA Bnk1-J2 (order code dependent)

This setting provides the selection for the voltage signal input.

PICKUP

Range (3.xx): 0.02 to 3.00 x VT in steps of 0.01 x VT

Range (4.10): 0.02 to 4.00 x VT in steps of 0.01 x VT

Default: 0.30 x VT

CURVE

Range (3.xx): Definite Time, FlexCurve A, FlexCurve B, FlexCurve C, FlexCurve D

Range (4.10): Definite Time, FlexCurve A, FlexCurve B, FlexCurve C, FlexCurve D, Inverse time

Default: Definite Time

PICKUP DELAY

Range: 0.000 to 6000.000 s in steps of 0.001 s

Default: 1.000 s

The ***NEUTRAL OV 1 PICKUP DELAY*** setting applies only if the ***NEUTRAL OV 1 CURVE*** setting is `Definite time`.

If Inverse Time is selected as neutral OV Curve, the Pickup Delay value is loaded to variable D in the curve formula.

DROPOUT DELAY

Range: 0.000 to 6000.000 s in steps of 0.001 s

Default: 1.000 s

BLOCK

Range: Off, Any FlexLogic operand

Default: Off

OUTPUT RELAY X

Range: Operate, Do Not Operate

Default: Do Not Operate

EVENTS

Range: Enabled, Disabled

Default: Enabled

TARGETS

Range: Disabled, Self-reset, Latched

Default: Self-reset

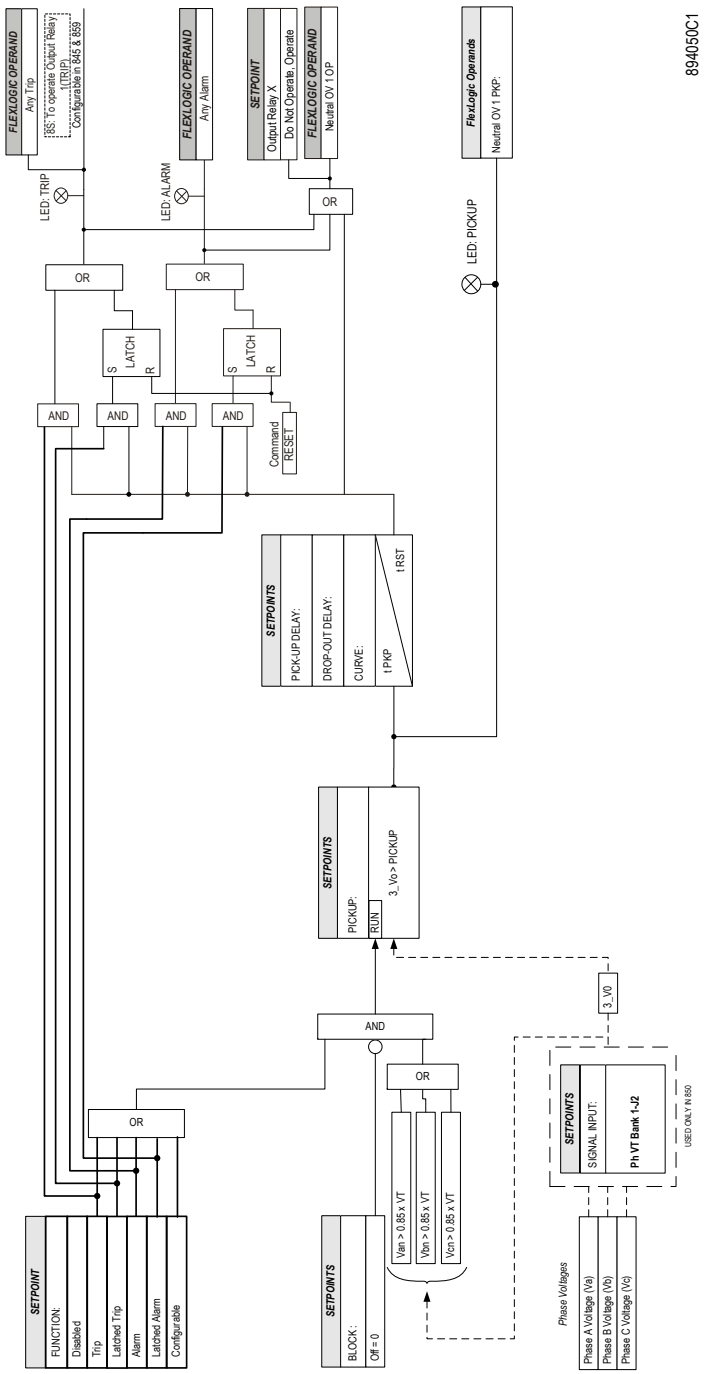

Figure 200: Neutral Overvoltage Protection logic diagram

9.2.2.8 NEGATIVE SEQUENCE OVERVOLTAGE PROTECTION (59_2)

The relay provides one Negative Sequence Overvoltage (Negative Sequence OV 1) element per protection group, or a total of 6 elements.

The Negative Sequence Overvoltage element can be used to detect an asymmetrical system voltage condition, loss of one or two phases of the source, or reversed phase sequence of voltages. The element responds to the negative sequence voltage (V2), calculated from the phase voltages. The Negative Sequence Overvoltage element may be set as an instantaneous element with no time delay, or may be set as a definite time element.

The settings of this function are applied to the calculated Negative Sequence Voltage to produce Pickup and Trip flags. The Negative Sequence OV Pickup flag is asserted when the Negative Sequence Voltage is above the PKP

value. The Negative Sequence OV Trip flag is asserted if the element stays picked up for the time defined by Pickup time delay. The element drops from Pickup without operation if the calculated Negative Sequence Voltage drops below 97 to 98% of the Pickup value before the time for operation is reached.

Path: ***Setpoints*** > ***Protection*** > ***Group 1(6)*** > ***Voltage*** > ***Neg Seq OV 1(X)***

FUNCTION

Range: Disabled, Trip, Alarm, Latched Alarm, Configurable

Note: Relays with firmware version 4 and later have a `Latched Trip` *option*

Default: Disabled

SIGNAL INPUT

Range: dependent upon the order code

Default: Ph VT Bnk1-J2 or LEA Bnk1-J2 (order code dependent)

This setting provides the selection for the voltage signal input.

PICKUP

Range: 0.00 to 3.00 x VT in steps of 0.01 x VT

Default: 1.00 x VT

This setting sets the Negative Sequence Overvoltage Pickup level specified per times VT. For example, a Pickup setting of 0.80 x VT with 13800:115 VT translates into 11.04 kV (or 92 V secondary).

> *Note:*
> *If the 3 phase VT is delta connected, the Negative Sequence Overvoltage pickup level is internally changed to $1/\sqrt{3}$ of the user setting, before being compared to the actual negative sequence voltage.*

PICKUP DELAY

Range: 0.000 to 6000.000 s in steps of 0.001 s

Default: 1.000 s

This setting provides definite time pick-up delay. Instantaneous operation is selected by pick-up time delay setting of 0.000 s.

DROPOUT DELAY

Range: 0.000 to 6000.000 s in steps of 0.001 s

Default: 1.000 s

This setting provides definite time drop-out delay. An instantaneous reset is provided by drop-out time delay setting of 0.000 s

BLOCK

Range: Off, Any FlexLogic operand

Default: Off

OUTPUT RELAY X

Range: Operate, Do Not Operate

Default: Do Not Operate

EVENTS

Range: Enabled, Disabled

Default: Enabled

TARGETS

Range: Disabled, Self-reset, Latched

Default: Self-reset

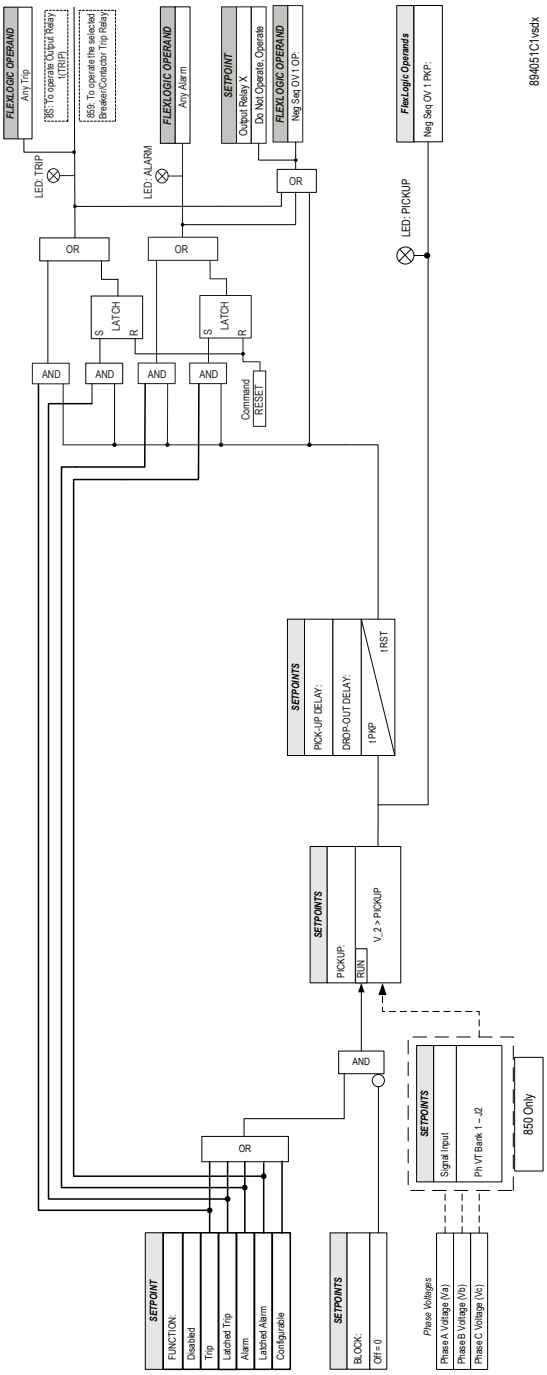

Figure 201: Negative Sequence Overvoltage Protection logic diagram

9.2.3 ADMITTANCE ELEMENTS

9.2.3.1 NEUTRAL ADMITTANCE (21YN)

In a medium voltage (MV) network, the compensating reactor is used to compensate the capacitive fault current ideally to zero at the fault point. However, detection of low ground fault current in such networks is challenging when using the conventional current-based ground fault detection methods. This element uses neutral admittance based criteria to successfully detect the ground fault in the compensated or isolated MV networks. Measured or calculated values of neutral current (I_0) and neutral voltage (V_0) are used to calculate the shunt neutral admittance (Y_0), conductance (G_0) and susceptance (B_0). The element uses one of the three modes (Y_0, G_0, B_0) to operate or block the output operands.

Path: ***Setpoints*** > ***Protection*** > ***Group 1(6)*** > ***Admittance*** > ***Neutral Admittance 1(X)***

FUNCTION

Range: Disabled, Trip, Alarm, Latched Alarm, Configurable

Note: Relays with firmware version 4 and later have a `Latched Trip` *option*

Default: Disabled

This setting enables the Neutral Admittance functionality.

CURRENT INPUT

Range: J1 I0, J1 Ig, K1 I0, K1 Ig, K1 Isg

Default: J1 I0

Current input can be programmed to be either the zero-sequence current, J1 I0 and K1 I0, calculated from the phase currents or measured ground current, J1 Ig and K1 Ig, supplied externally at ground CT input. The setting range provides flexibility of selecting the current source bank; currents J1 I0 and J1 Ig correspond to Bank 1 – Slot J1, while currents K1 I0 and K1 Ig correspond to Bank 2 – Slot K1.

> *Note:*
> *Selection of K1 I0 and K1 Ig, is only available with a Slot K bank order code. Otherwise, the neutral admittance is calculated from the Slot J options only.*

VOLTAGE INPUT

Range: J2 V0, J2 Vaux, K2 V0, K2 Vaux

Default: J2 V0

Voltage input can be programmed to be either the zero-sequence voltage, J2 V0 and K2 V0, calculated from the phase voltages, or the measured voltage, J2 Vaux and K2 Vaux, supplied externally at auxiliary VT input. The setting range provides the flexibility of selecting the voltage source bank; voltages J2 V0 and J2 Vaux correspond to Bank1 - Slot J2, while currents K2 V0 and K2 Vaux corresponds to Bank2 - Slot K2.

> *Note:*
> *When Voltage Input is set to J2 Vaux or K2 Vaux, it is required that the setpoint* ***AUX VT CONNECTION*** *(under* ***Setpoints*** > ***System*** > ***Voltage Sensing****) be set to* `VN` *for this element, otherwise the element operation will be blocked by the relay.*
> *When Voltage Input is set to J2 V0 or K2 V0, phase voltages must be wye-connected, and setpoint* ***PHASE VT CONNECTION*** *(under* ***Setpoints*** > ***System*** > ***Voltage Sensing****) must be set to* `Wye`*.*

Note:
Selection of K2 V0, K2 Vaux, is only available with the Slot K Bank order code. Otherwise, the neutral admittance is calculated from Slot J options only.

MODE

Range: Y0, G0, B0

Default: Y0

This setting selects the protection criterion (characteristic quantity) of the Neutral Admittance Ground Fault protection. When this value is set to Y0, G0 and B0, the protection criterion is Neutral-Admittance, Neutral-Conductance, and Neutral-Susceptance, respectively.

DIRECTION

Range: Non-directional, Forward, Reverse

Default: Non-directional

When set to `Non-Directional`, the element operates in both forward and reverse direction.When set to “Forward”, the element operates when the fault is detected in the forward direction. When set to `Reverse`, the element operates when the fault is detected in the Reverse direction.The following figures show the interactions between different setting options of the parameters Mode and Direction per the tripping and operating ranges of the Neutral Admittance Ground Fault protection.

Note:
This is setting is not applicable to protection criterion mode Y0.

ANGLE CORRECTION

Range: 0.0 to 359.0° in steps of 0.1°

Default: 0.0°

This setting specifies the correction angle between current and voltage.

In addition, this setting can be used to correct the relative polarity of the ground current with respect to voltage. If the polarity of the current is reversed or not relative to voltage, this setting can be used to change the polarity. When “180 deg” is selected, the measured admittance Y0 is multiplied with -1 which corresponds to a 180 degree shift in current direction.

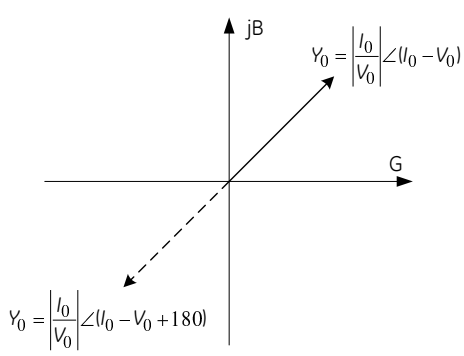

Secondly, this angle can also be used to eliminate the angular errors of the voltage transformer and/or current transformers (CT); measured phase angle deviations caused by measuring inaccuracy of voltage transformers, can be eliminated by properly setting this value.

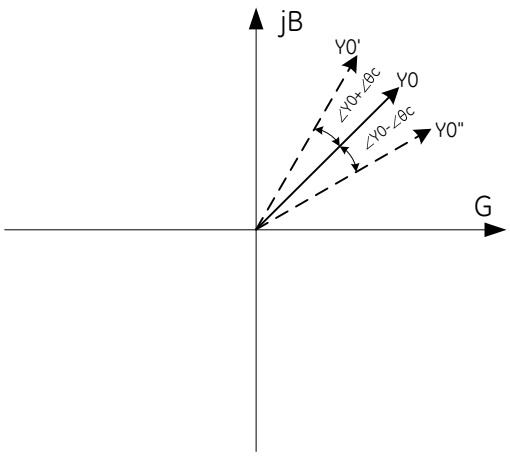

Y0 REACH

Range: 0.00 to 500.00 mS in steps of 0.01 mS

Default: 1.00 mS

This setting defines the reach of neutral admittance based protection criterion. Neutral Admittance Ground Fault protection will operate after the set Pickup Delay time when the neutral admittance quantity, Y0, exceeds this reach level. Regardless of the ***DIRECTION*** setting, this element always operates in the non-directional mode. Operating characteristic depends only on the pick-up threshold defined by this setting.

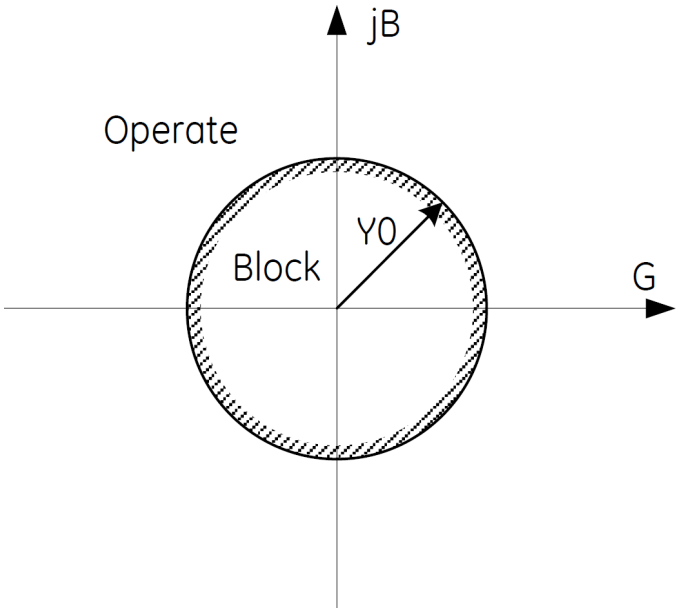

G0 FWD REACH

Range: -500.00 to 500.00 mS in steps of 0.01 mS

Default: 1.00 mS

This setting defines the pickup level of protection criterion based on the neutral conductance. Neutral Admittance Ground Fault protection will operate after the set Pickup Delay time when the neutral conductance quantity, G0, exceeds the reach level defined by this setting. This setting is not applicable when the ***DIRECTION*** setting is set to Reverse.

G0 REV REACH

Range: -500.00 to 500.00 mS in steps of 0.01 mS

Default: -1.00 mS

This setting defines the pickup level of protection criterion based on the neutral conductance. Neutral Admittance Ground Fault protection will operate after the set Pickup Delay time when the neutral conductance quantity, G0, lies below the reach level defined by this setting. This setting is not applicable when the ***DIRECTION*** setting is set to Forward.

Depending on pick-up threshold (G0) and directional settings, conductance characteristics are as follows:

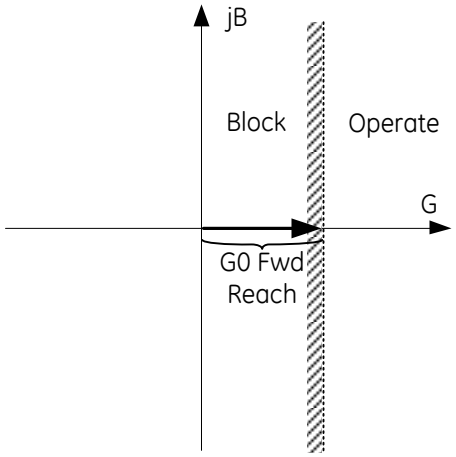

Forward Direction Operate/Block Characteristic

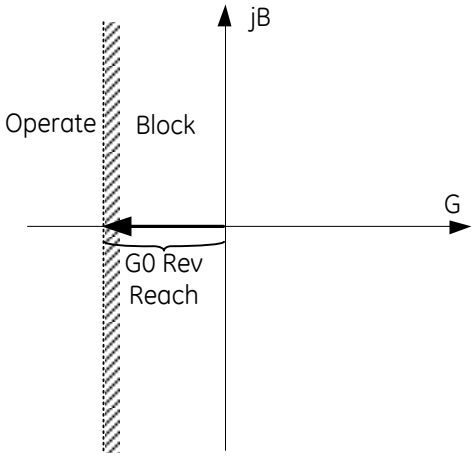

Reverse Direction Operate/Block Characteristic

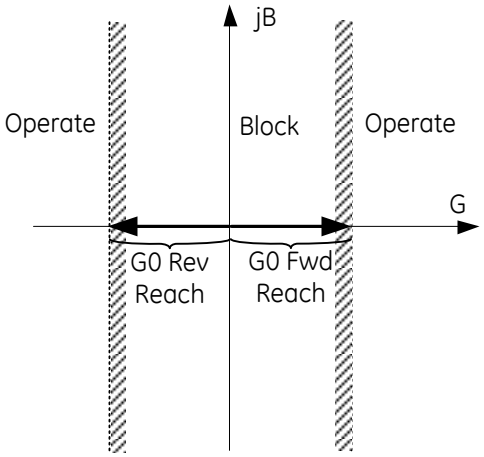

Non-directional Operate/Block Characteristic when G0 Fwd Reach ≥ G0 Rev Reach

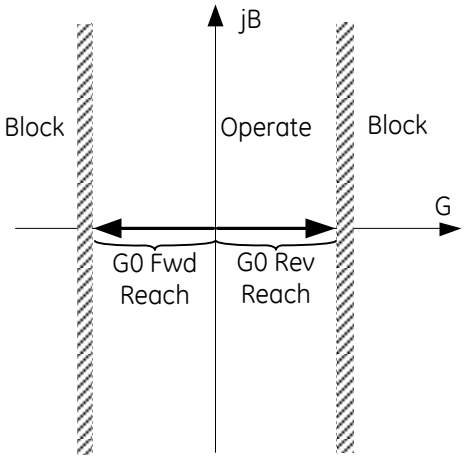

Non-directional Operate/Block Characteristic when G0 Fwd Reach < G0 Rev Reach

B0 FWD REACH

Range: -500.00 to 500.00 mS in steps of 0.01 mS

Default: 1.00 mS

This setting defines the pickup level of the protection criterion based on the neutral susceptance. Neutral Admittance Ground Fault protection will operate after the set Pickup Delay time when the neutral susceptance quantity, B0, exceeds this setting. This setting is not applicable when the ***DIRECTION*** setpoint is set as Reverse.

B0 REV REACH

Range: -500.00 to 500.00 mS in steps of 0.01 mS

Default: -1.00 mS

This setting defines the pickup level of the protection criterion based on the neutral susceptance. Neutral Admittance Ground Fault protection will operate after the set Pickup Delay time when the neutral susceptance quantity, B0, lies below the reach level defined by this setting. This setting is not applicable when the ***DIRECTION*** setting is set to Forward.

Depending on pick-up threshold (B0) and directional settings, susceptance characteristics are as follows:

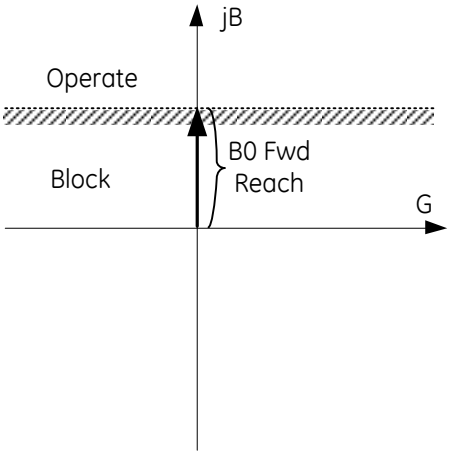

Forward Direction Operate/Block Characteristic

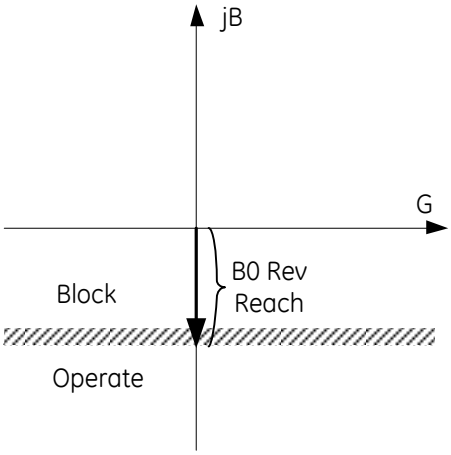

Reverse Direction Operate/Block Characteristic

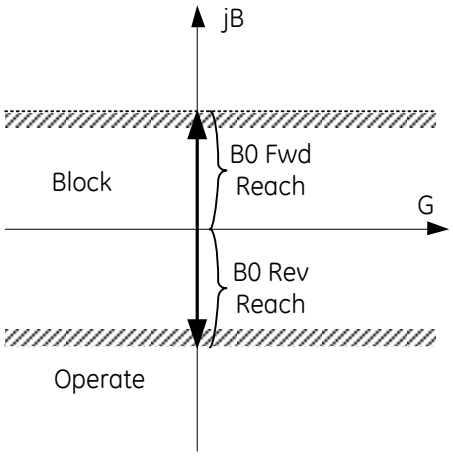

Non-directional Operate/Block Characteristic when B0 Fwd Reach ≥ B0 Rev Reach

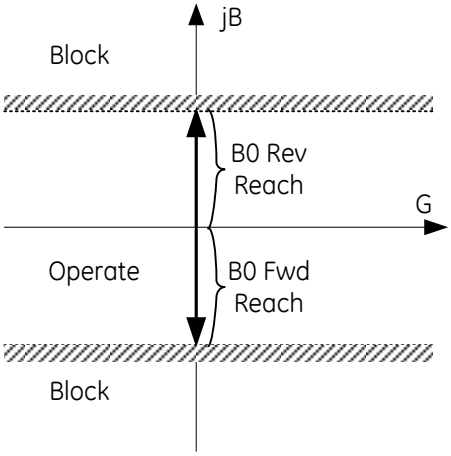

Non-directional Operate/Block Characteristic when B0 Fwd Reach < B0 Rev Reach

> *Note:*
> *All the reach settings, for admittance, conductance, and susceptance, are expressed in secondary Siemens.*

MINIMUM CURRENT

Range: 0.02 to 1.00 x CT in steps of 0.01 x CT

Default: 0.02 x CT

Range (for sensitive ground when Current Input is set to K1 Isg): 0.005 to 0.100 x CT in steps of 0.001 x CT

Default: 0.005 x CT

This setting specifies the minimum limit of the measuring process ground/sensitive ground current to activate Neutral Admittance Ground/Sensitive Ground Fault protection. The element remains blocked until the ground/sensitive ground current value for building the protective criterion exceeds this minimum limit.

MINIMUM VOLTAGE

Range: 0.01 to 1.50 x VT in steps of 0.01 mS

Default: 0.01 x VT

This setting specifies the minimum limit of the measuring process ground voltage to activate Neutral Admittance Ground Fault protection. The element remains blocked until the ground voltage value for building the protective criterion exceeds this minimum limit.

PICKUP DELAY

Range: 0.000 to 600.000 s in steps of 0.001 s

Default: 0.100 s

This setting specifies a time delay for the function.

DROPOUT DELAY

Range: 0.000 to 600.000 s in steps of 0.001 s

Default: 0.000 s

This setting specifies a dropout time delay for the function.

BLOCK

Range: Off, Any FlexLogic operand

Default: Off

The element will be blocked, when the selected operand is asserted.

OUTPUT RELAY X

Range: Operate, Do Not Operate

Default: Do Not Operate

EVENTS

Range: Enabled, Disabled

Default: Enabled

The element will be blocked, when the selected operand is asserted.

TARGETS

Range: Self-reset, Latched, Disabled

Default: Self-reset

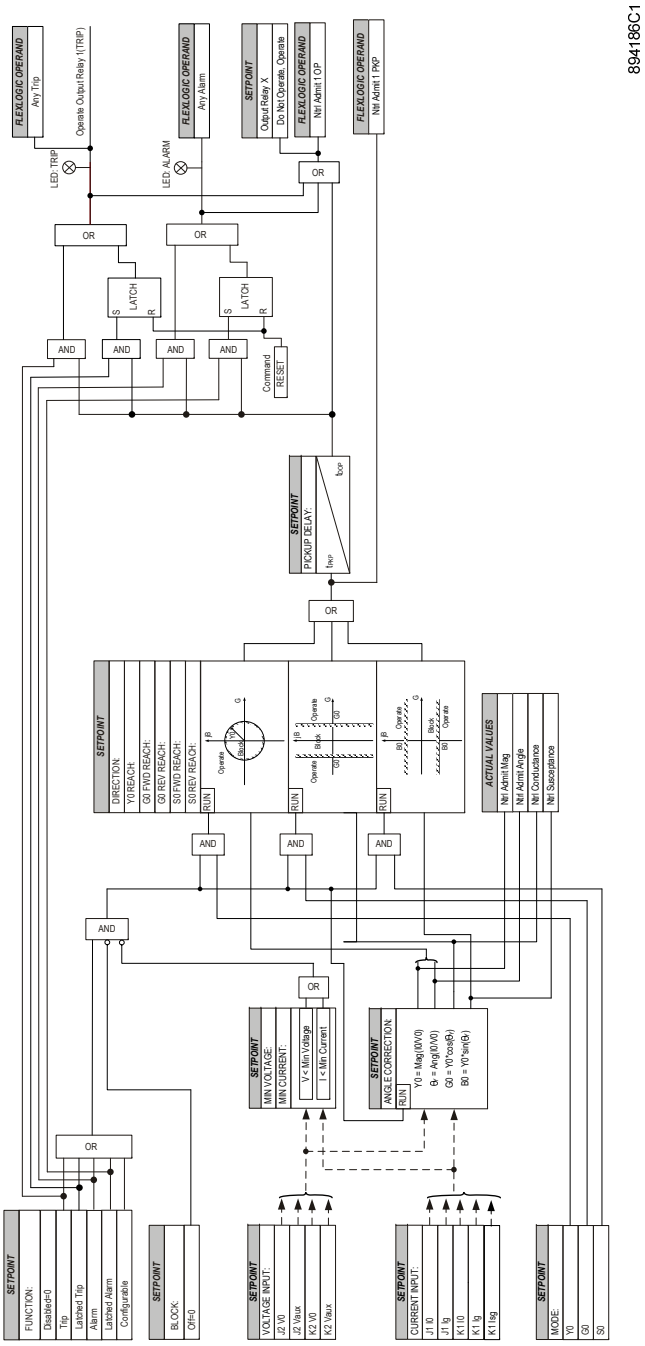

Figure 202: Neutral Admittance Ground Protection logic diagram

9.2.4 POWER ELEMENTS

9.2.4.1 DIRECTIONAL POWER (32)

The relay provides two identical Directional Power elements per protection group; a total of 12 elements.

The Directional Power element responds to three-phase directional power and is designed for reverse power (32REV) and low forward power (32FWD) applications for synchronous machines or interconnections involving co-generation. The relay measures the three-phase power from either a full set of wye-connected VTs or a full-set of delta-connected VTs. In the latter case, the two-wattmeter method is used.

The element has an adjustable characteristic angle and minimum operating power as shown in the Directional Power characteristic diagram. The element responds to the following condition:

$$P\cos\theta + Q\sin\theta > MIN$$

Where:

- P and Q are active and reactive powers as measured per the metering convention
- Θ is a sum of the element characteristic (DIR POWER 1 RCA) and calibration (DIR POWER 1 CALIBRATION) angles
- SMIN is the minimum operating power.

The element has two independent (as to the ***PICKUP*** and ***DELAY*** settings) stages for Alarm and Trip, and they can be set separately to provide mixed power protection.

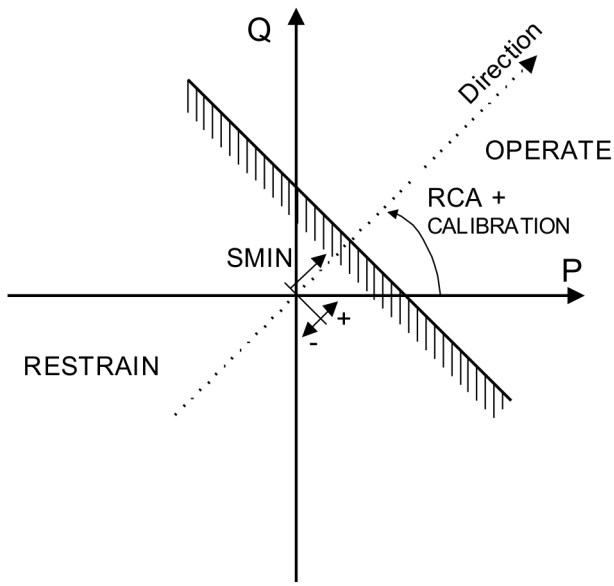

Figure 203: Directional Power characteristic

By making the characteristic angle adjustable and providing for both negative and positive values of the minimum operating power, a variety of operating characteristics can be achieved as presented in the figure below. For example, section (a) in the figure below shows settings for reverse power, while section (b) shows settings for low forward power applications.

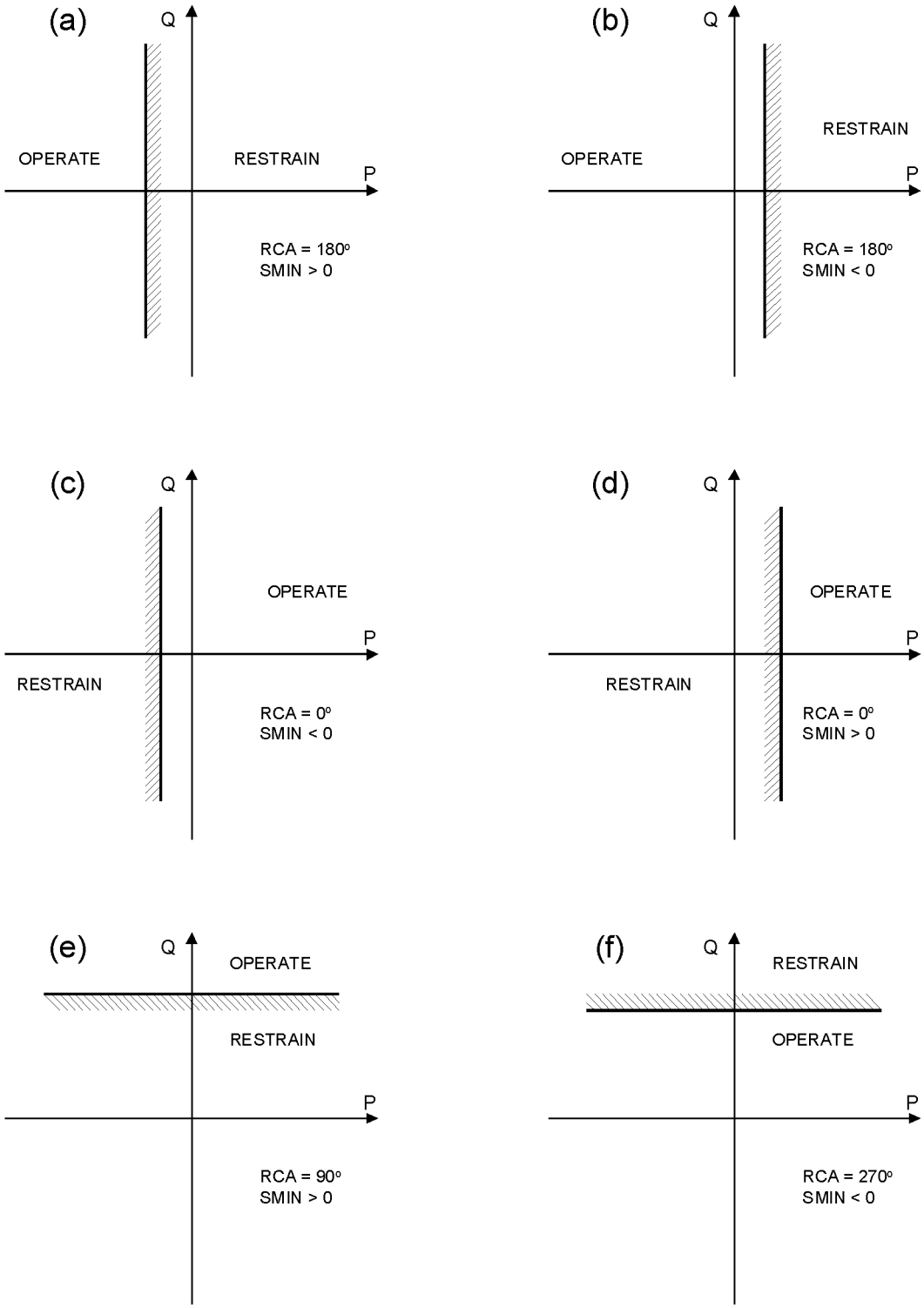

Figure 204: Sample applications of the Directional Power element

Path: ***Setpoints*** > ***Protection*** > ***Group 1(6)*** > ***Power*** > ***Directional Power 1(X)***

FUNCTION

Range: Disabled, Trip, Alarm, Latched Alarm, Configurable

Note: Relays with firmware version 4 and later have a `Latched Trip` *option*

Default: Disabled

SIGNAL INPUT (Not 859)

Range: Power 1, Power 2

Default: Power 1

This setting provides the selection for the power input. Depending on the order code selection, the corresponding CT/VT inputs to calculate power are selected under ***Setpoints*** > ***System*** > ***Power Sensing***.

RCA

Range: 0 to 359° in steps of 1°

Default: 180°

This setting specifies the Relay Characteristic Angle (RCA) for the Directional Power function. Application of this setting provides the following benefits:

- It allows the element to respond to active or reactive power in any direction (active overpower/underpower, etc.).
- Together with a precise calibration angle, it allows compensation for any CT and VT angular errors to permit more sensitive settings.
- It allows for required direction in situations when the voltage signal is taken from behind a delta-wye connected power transformer and phase angle compensation is required.

For example, the active overpower characteristic is achieved by setting ***DIR POWER 1 RCA*** to “0°,” reactive overpower by setting ***DIR POWER 1 RCA*** to “90°,” active underpower by setting ***DIR POWER 1 RCA*** to “180°,” and reactive underpower by setting ***DIR POWER 1 RCA*** to “270°”.

CALIBRATION

Range: 0 to 0.95° in steps of 0.05°

Default: 0°

This setting allows the Relay Characteristic Angle to change in steps of 0.05°. This may be useful when a small difference in VT and CT angular errors is to be compensated to permit more sensitive settings.

The setting enables calibration of the Directional Power function in terms of the angular error of applied VTs and CTs. The element responds to the sum of the ***DIR POWER 1 RCA*** and ***DIR POWER 1 CALIBRATION*** settings.

STAGE 1 SMIN

Range: -3.000 to 3.000 x Rated Power in steps of 0.001 x Rated Power

Default: 0.100 x Rated Power

The setting specifies the minimum power as defined along the relay characteristic angle (RCA) for the stage 1 of the element. The positive values imply a shift towards the operate region along the RCA line; the negative values imply a shift towards the restrain region along the RCA line. Refer to the Directional power sample applications figure for details. Together with the RCA, this setting enables a wide range of operating characteristics.

The setting applies to three-phase power and the rated power is as follows:

$$\text{Rated Power} = 3 \times VT_{\text{Secondary (phase-neutral)}} \times VT_{\text{Ratio}} \times CT_{\text{Primary}} \text{(Wye-connected VT), or Rated Power} = (3)^{1/2} \times VT_{\text{Secondary (phase-phase)}} \times VT_{\text{Ratio}} \times CT_{\text{Primary}} \text{ (Delta-connected VT)}$$

For example:

A setting of 2% for a 200 MW machine is 0.02 × 200 MW = 4 MW.

If 7.967 kV is a primary VT phase-neutral voltage and 10 kA is a primary CT current, the source rated power is 239 MVA, and, SMIN must be set at 4 MW/239 MVA =0.0167 x Rated ≈ 0.017 x Rated.

If the reverse power application is considered, RCA = 180° and SMIN = 0.017 x Rated.

The element drops out if the magnitude of the positive-sequence current becomes virtually zero, that is, it drops below the cutoff level.

STAGE 1 DELAY

Range: 0.000 to 6000.000 s in steps of 0.001 s

Default: 0.500 s

The setting specifies a time delay for stage 1. For reverse power or low forward power applications for a synchronous machine, stage 1 is typically applied for alarming and stage 2 for tripping.

STAGE 2 SMIN

Range: -3.000 to 3.000 x Rated Power in steps of 0.001 x Rated Power

Default: 0.100 x Rated Power

The setting specifies the minimum power as defined along the relay characteristic angle (RCA) for stage 2 of the element. The setting needs to be coordinated with the setting of stage 1.

STAGE 2 DELAY

Range: 0.000 to 6000.000 s in steps of 0.001 s

Default: 20.000 s

The setting specifies a time delay for stage 2. For reverse power or low forward power applications for a synchronous machine, stage 1 is typically applied for alarming and stage 2 for tripping.

BLOCK

Range: Off, Any FlexLogic operand

Default: Off

OUTPUT RELAY X

Range: Operate, Do Not Operate

Default: Do Not Operate

EVENTS

Range: Enabled, Disabled

Default: Enabled

TARGETS

Range: Self-reset, Latched, Disabled

Default: Self-reset

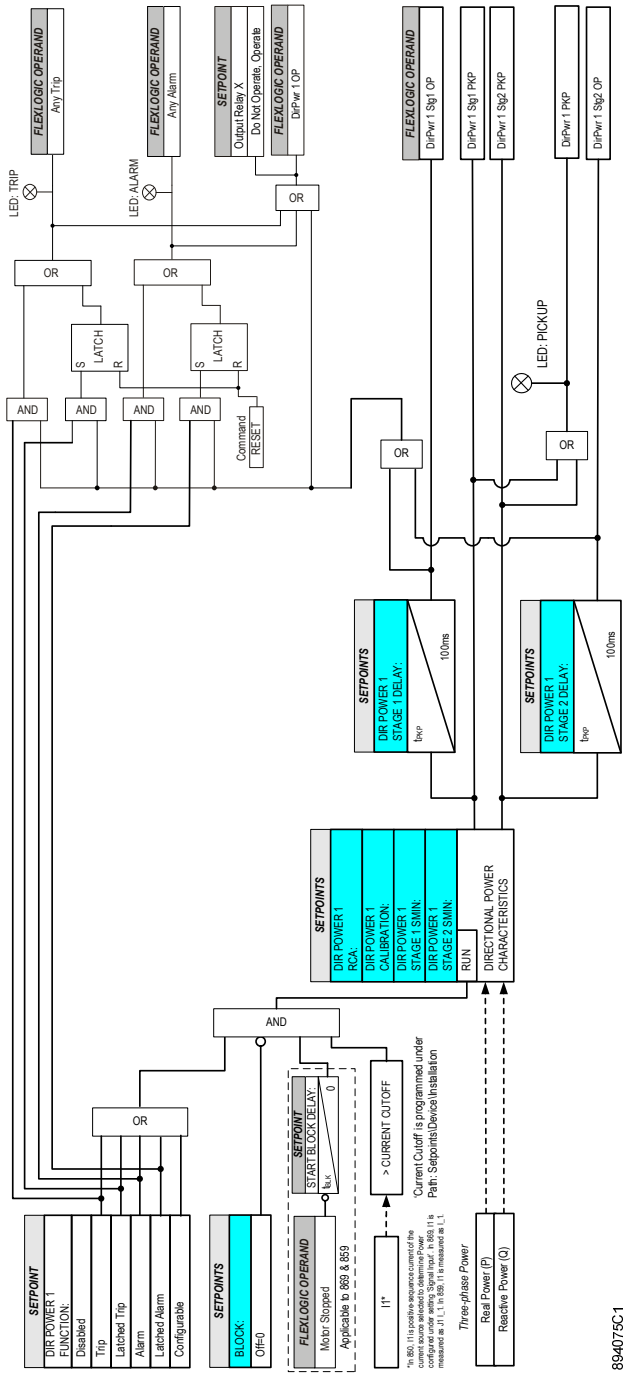

Figure 205: Directional Power logic diagram

9.2.4.2 WATTMETRIC GROUND FAULT (32N)

The Wattmetric Ground Fault element, also called Wattmetric Zero-sequence Directional element, responds to power derived from zero-sequence voltage and current in a direction specified by the element characteristic angle. The angle can be set within all four quadrants and the power can be active or reactive. Therefore, the element may be used to sense either forward or reverse ground faults in inductive, capacitive or resistive networks. The inverse time characteristic allows time coordination of elements across the network. Typical applications include Ground Fault protection in grounded/ungrounded/resistor-grounded/resonant-grounded distribution networks, or directionalizing other non-directional ground elements.

Path: ***Setpoints*** > ***Protection*** > ***Group 1(6)*** > ***Power*** > ***Wattmetric Ground Fault 1(X)***

FUNCTION

Range: Disabled, Trip, Alarm, Latched Alarm, Configurable

Note: Relays with firmware version 4 and later have a `Latched Trip` *option*

Default: Disabled

VT INPUT

Range: dependent upon the order code

Default: Ph VT Bnk1-J2

This setting provides the selection for the voltage bank input. If ‘Calculated VN’ is selected, the voltage input shall be either ‘Ph VT Bnk1-J2’ or ‘Ph VT Bnk1-K2’. If ‘Measured Vx’ is selected, the voltage input shall be either ‘Ax VT Bnk1-J2’ or ‘Ax VT Bnk2-K2’.

VOLTAGE

Range: Calculated VN, Measured VX(VN)

Default: Calculated VX(VN)

The element uses neutral voltage (that is, three times the zero-sequence voltage). The setting allows selecting the internally calculated neutral voltage, or externally supplied voltage (broken delta VT connected to the auxiliary channel bank of the relay). When the latter selection is made, the auxiliary channel must be identified by the user as a neutral voltage under the VT bank settings. This element operates only if the auxiliary voltage is configured as neutral.

OPERATING VOLTAGE PICKUP

Range: 0.02 to 3.00 x VT in steps of 0.01 x VT

Default: 0.20 x VT

The setting specifies the minimum zero sequence voltage supervising the directional power measurement. This threshold is higher than possible unbalance during normal operation of the system. Typically, this setting is selected at 0.1 to 0.2 x VT for the ungrounded or resonant grounded systems, and at 0.05 to 0.1 x VT for solidly or resistor-grounded systems. When using externally supplied voltage via the auxiliary voltage channel, 1 x VT is the nominal voltage of this channel as per VT bank settings. When using internally calculated neutral voltage, 1 x VT is the nominal phase-to-ground voltage per the VT bank settings.

CT INPUT

Range: dependent upon the order code

Default: CT Bank 1 -J1

This setting provides selection for the current bank input.

CURRENT

Range: Calculated IN, Measured IG

Default: Calculated IN

The element responds to the neutral current (that is, three times zero-sequence current), either calculated internally from the phase currents or supplied externally via the ground CT input from more accurate sources such as the core balanced CT. The setting allows selecting the source of the operating current.

OPERATING CURRENT PICKUP

Range: 0.002 to 30.000 x CT in steps of 0.001 x CT

Default: 0.060 x CT

The setting specifies the current supervision level for the measurement of zero-sequence power.

POWER PICKUP

Range: 0.001 to 1.200 CTxVT in steps of 0.001 CTxVT

Default: 0.100 CTxVT

The setting specifies the operating point of the element. A value of 1 CTxVT is a product of the 1 VT voltage as specified for the overvoltage condition of this element, and 1 CT current as specified for the overcurrent condition of this element.

REFERENCE POWER PICKUP

Range: 0.001 to 1.200 CTxVT in steps of 0.001 CTxVT

Default: 0.500 CTxVT

The setting is used to calculate the inverse time characteristic delay (defined by Sref in the equations below). A value of 1 CTxVT represents the product of a 1 VT voltage (as specified in the overvoltage condition for this element) and a 1 CT current (as specified in the overcurrent condition for this element.

ECA

Range: 0 to 359° in steps of 1°

Default: 0°

The setting adjusts the maximum torque angle of the element. The operating power is calculated as:

$$S_{op} = Re[V_n(I_n \text{ x } 1\angle ECA°)^*]$$

Where:

- * indicates complex conjugate. By varying the element characteristic angle (ECA), the element can be made to respond to forward or reverse direction in inductive, resistive, or capacitive networks as shown in the Wattmetric characteristic angle response diagram.

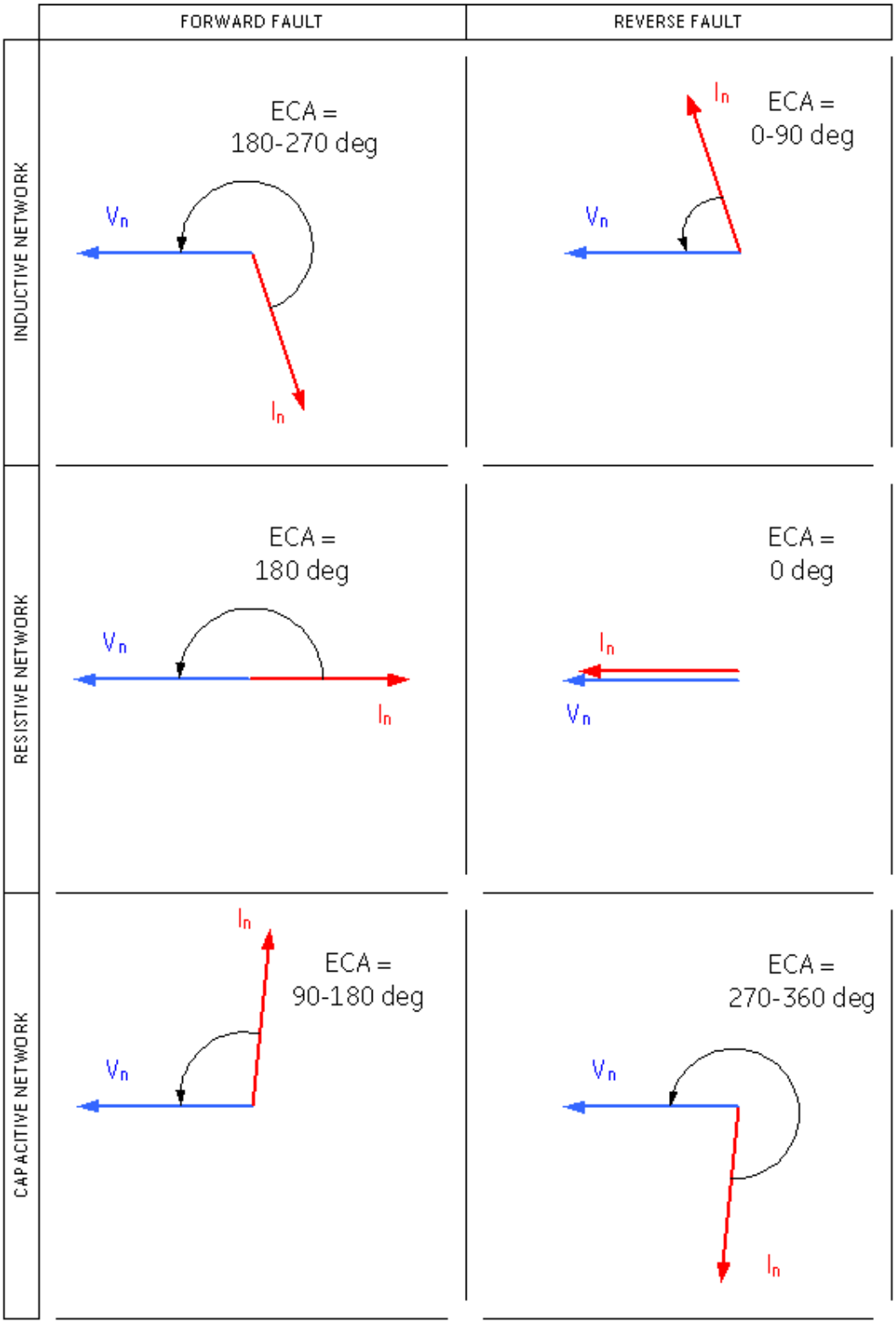

Figure 206: Wattmetric characteristic angle response

POWER PICKUP DELAY

Range: 0.000 to 6000.000 s in steps of 0.001 s

Default: 0.200 s

The setting defines a definite time delay before the inverse time characteristic is activated. If the curve selection is set as “Definite Time” the element operates after this security time delay. If the curve selection is “Inverse,” or one of the FlexCurves, the element uses both the definite and inverse time timers simultaneously. The definite time timer specified by this setting, is used, and when it expires it releases the inverse time timer for operation (torque control).

CURVE

Range: Definite Time, Inverse, FlexCurves A through D

Default: Definite Time

The setting allows the choice of one of three methods to delay operate signal once all the conditions are met to discriminate fault direction.

The `Definite Time` selection allows for a fixed time delay defined by the POWER PICKUP DELAY setting.

The `Inverse` selection allows for inverse time characteristics delay defined by the following formula:

$$t = m \times Sr_{ef}/S_{op}$$

Where:

m is a multiplier defined by the multiplier setting

S_{ref} is the reference power Pickup setting

S_{op} is the operating power at the time. This timer starts after the definite time timer expires.

The four FlexCurves allow custom user-programmable time characteristics. When working with FlexCurves, the element uses the operate power to reference power ratio, and the multiplier setting is not applied:

$$t = \text{FlexCurve} \times S_{op}/Sr_{ef}$$

Again, the FlexCurve timer starts after the definite time timer expires.

MULTIPLIER

Range: 0.01 to 2.00 s in steps of 0.01 s

Default: 1.00 s

LIMIT ANGLE

Range: 0 TO 90° in steps of 1°

Default: 0°

This setting sets the Limit Angle to block the WGF operation in both the directions.

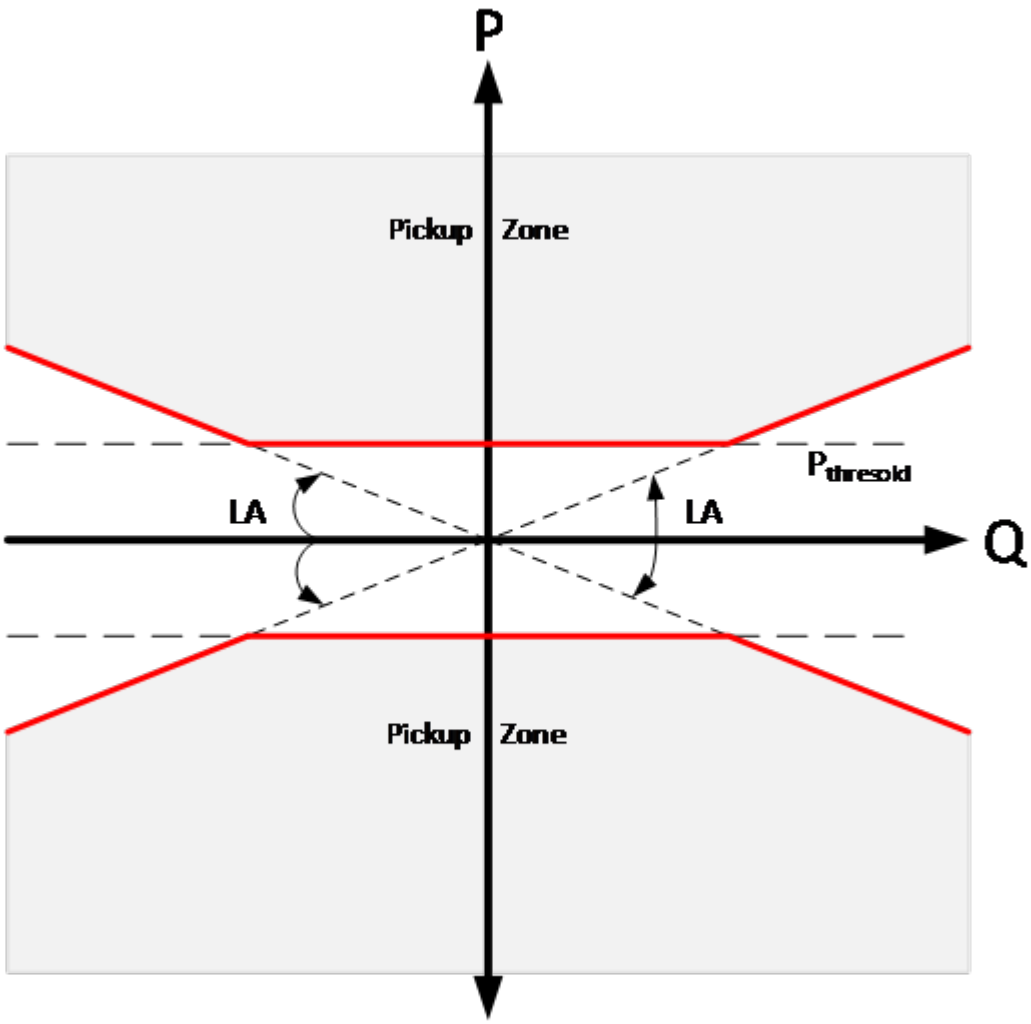

BLOCK

Range: Off, Any FlexLogic operand

Default: Off

OUTPUT RELAY X

Range: Operate, Do Not Operate

Default: Do Not Operate

EVENTS

Range: Enabled, Disabled

Default: Enabled

TARGETS

Range: Self-reset, Latched, Disabled

Default: Self-reset

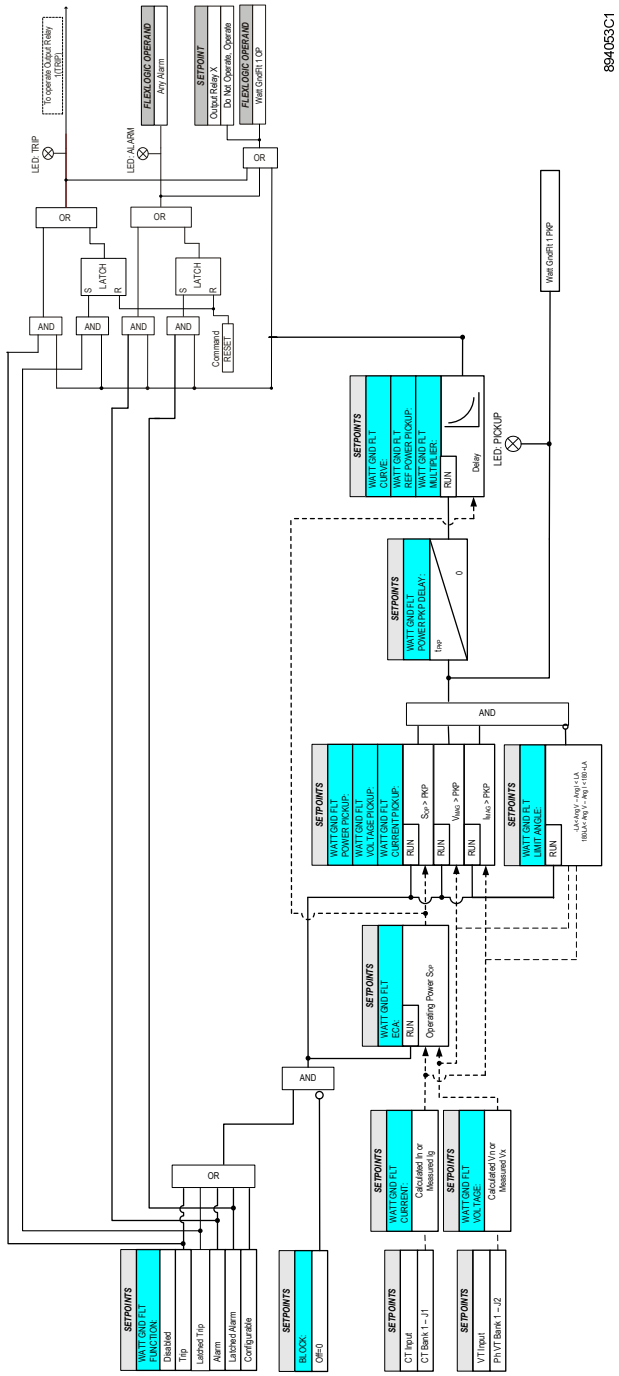

Figure 207: Wattmetric Ground Fault logic diagram

9.2.5 FREQUENCY ELEMENTS

9.2.5.1 FREQUENCY PROTECTION COMMON SETUP

The relay provides a selection to detect between *Normal* and *Hi-Speed Freq* as input to detect underfrequency, overfrequency and rate of change of frequency (ROCOF). Compared to the regular metered voltage frequency value, the *Hi-Speed Freq* input has a faster response time, but is less accurate.

The Normal frequency estimation algorithm checks the time between two positive zero-crossing of the effective frequency signal. It also provides an extra security condition before considering that the new incoming period would be valid and available for the estimation of the frequency. The frequency is updated with the integration of the last

16 stored periods. When there is a large change in frequency between two consecutive periods, the estimation of the frequency is updated with the integration of the last 4 valid periods.

The Hi-Speed Freq estimation algorithm is less restrictive and checks the time between two consecutive zero-crossings in both directions of the effective frequency signal. Therefore, one measurement (raw frequency) would be available every half cycle. The frequency is updated with the integration of the latest valid stored periods. The number of periods used for the calculation is specified by the setting ***Semicycles Set***. Another estimation of the frequency is also provided after the integration of the latest valid stored periods but considering the setting ***Semicycles Reset***.

The Actual value ***Hi-Speed Freq*** is available under Path: ***Measurement > Hi-Speed Freq***.

High-Speed Frequency

Range: Disabled, Enabled

Default: Disabled

This setting enables measurement of Hi-Speed Freq. When enabled, all the frequency-based elements (UF, OF, ROCOF) provide user-configurable selection between `Normal` and `Hi-Speed Freq`. The selection between Normal and Hi-Speed Freq is specified by the setpoint ***Frequency Input.*** When disabled, all the frequency-based elements (UF, OF, ROCOF) use Normal Frequency.

Freq Set # Semi-Cycles

Range: 5 to 16

Default: 5

Short Description:

The number of semi-cycles used for frequency estimation.

Freq Reset # Semi-Cycles

Range: 3 to 16

Default: 3

The number of semi-cycles used for frequency estimation to evaluate the reset conditions.

9.2.5.2 UNDERFREQUENCY (81U)

The relay can be used as the primary detecting relay in automatic load-shedding schemes based on underfrequency. The need for such a relay arises if during a system disturbance, an area becomes electrically isolated from the main system and suffers a generation deficiency due to the loss of either transmission or generation facilities. If reserve generation is not available in the area, conditions of low system frequency occur which can lead to a complete collapse. The relay provides several identical Underfrequency (UNDERFREQ) elements per protection group, which can automatically disconnect sufficient load to restore an acceptable balance between load and generation. The Underfrequency element can be set as an instantaneous element with no time delay or as a definite time delayed element. The Underfrequency element has the programmable minimum operating thresholds to prevent undesired operation during periods of light load or unavailable voltage. The input voltages are the three phase-to-phase voltages from delta connected VTs (PTs), three phase-to-ground voltages from wye connected VTs (PTs), or single phase auxiliary voltage. The input currents are the three phase currents.

The Underfrequency Pickup flag is asserted when the measured frequency of the specified source is below the PKP value and the voltage and current are above the MINIMUM levels. The Underfrequency Trip flag is asserted if the element stays picked up for the time defined by the Pickup time delay. The element drops from Pickup without operation if the measured frequency rises above 0.03Hz of the Pickup value and stays dropped-out for the defined time delay before the time for operation is reached.

The minimum operating voltage setting selects the minimum voltage below which the element is blocked.

The minimum operating current setting selects the minimum current below which the element is blocked. Operation during periods of light load are prevented.

Path: ***Setpoints*** > ***Protection*** > ***Group 1(6)*** > ***Frequency*** > ***Underfrequency 1(X)***

FUNCTION

Range: Disabled, Trip, Alarm, Latched Alarm, Configurable

Note: Relays with firmware version 4 and later have a `Latched Trip` *option*

Default: Disabled

FREQUENCY INPUT

Range: Normal, High-Speed

Default: Normal

You can select `Normal` or `High-speed` frequency as an input. Compared to the regular metered voltage frequency value, the high-speed frequency has the faster response but lesser accuracy. This setpoint is only available when Hi-Speed Freq is enabled under the path: ***Setpoints\Protection\Frequency\Common Setup.***

PICKUP

Range (normal frequency): 15.00 to 65.00 Hz in steps of 0.01 Hz

Range (high-speed frequency): 40.00 to 65.00 Hz in steps of 0.01 Hz

Default: 59 Hz

PICKUP DELAY

Range: 0.000 to 6000.000 s in steps of 0.001 s

Default: 2.000 s

DROPOUT DELAY

Range: 0.000 to 6000.000 s in steps of 0.001 s

Default: 2.000 s

Default: Ph VT Bnk1-J2

VT INPUT

Range: dependent upon the order code

Default: Ph VT Bnk1-J2 or LEA Bnk1-J2, Dependent on order code

MINIMUM VOLTAGE

Range: 0.000 to 1.250 x VT in steps of 0.001 x VT

Default: 0.700 x VT

The setting sets the minimum voltage for Underfrequency element operation specified per times VT. The setpoint prevents incorrect operation before energization of the source to the relay location, and during voltage dips.

> *Note:*
> *If the 3-phase VT uses a delta connection and* ***SIGNAL INPUT*** *is set to Ph VT Bnk1-J2, the positive sequence voltage is used as the supervision voltage. In such condition, the true supervision level is internally changed to 1/√3 of the user setting since the base of VT here is the phase-phase voltage.*

Note:
If the 3-phase VT uses a delta connection, the positive sequence voltage is used as the supervision voltage. In such condition, the true supervision level is internally changed to $1/\sqrt{3}$ of the user setting since the base of VT here is the phase-phase voltage.

Note:
When the source input for tracking frequency differs from that used for Under Frequency function, due to frequency variations, you may encounter notable voltage measurement errors as the frequency of input signal moves away from the tracking frequency source input. For instance, when the setting ***Frequency Input*** *is configured to auxiliary voltage (from the 4th VT), while the tracking frequency comes from the main source's three-phase voltages, any difference between the frequency of the auxiliary voltage (Vx) and the three-phase voltages (3VT) leads to a magnitude measurement error in Vx, caused by the deviation of Vx frequency from the main frequency*

CT INPUT (not for 859 or 889)

Range: dependent upon the order code

Default: CT Bank 1-J1 or CT Bank 1-K1, dependent on order code

MINIMUM CURRENT

Range: 0.000 to 30.000 x CT in steps of 0.001 x CT

Default: 0.200 x CT

The setting sets the minimum value of current required on any phase to allow the Underfrequency element to operate. The setpoint is used to prevent underfrequency tripping during periods of light load, when this action would have an insignificant effect on the system. A setting of zero is suspend current supervision.

BLOCK

Range: Off, Any FlexLogic operand

Default: Off

OUTPUT RELAY X

Range: Operate, Do Not Operate

Default: Do Not Operate

EVENTS

Range: Enabled, Disabled

Default: Enabled

TARGETS

Range: Disabled, Self-reset, Latched

Default: Self-reset

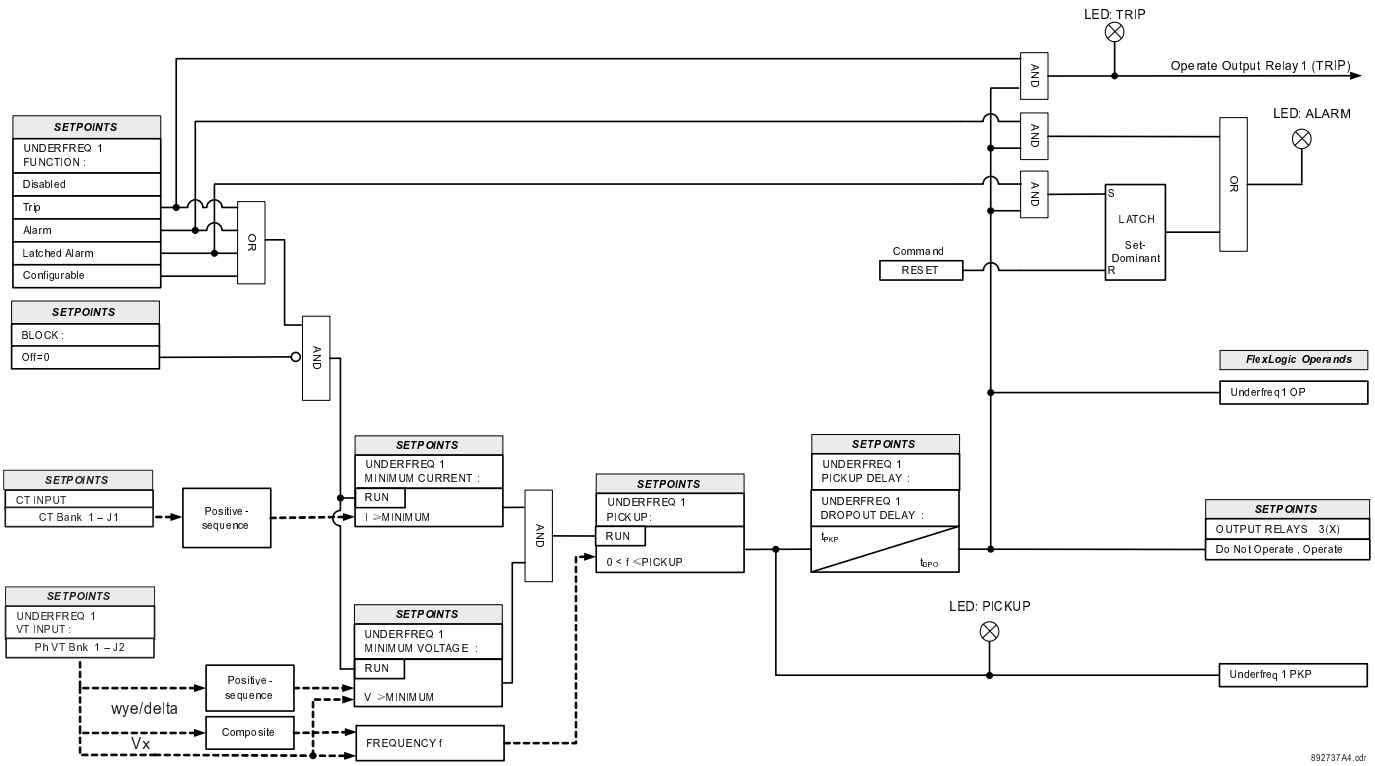

Figure 208: Underfrequency Protection logic diagram

9.2.5.3 OVERFREQUENCY (81O)

The relay provides several identical Overfrequency (OVERFREQ) elements per protection group.

A significant overfrequency condition, likely caused by a breaker opening and disconnecting load from a particular generation location, can be detected and used to quickly ramp the turbine speed back to normal. If this is not done, the over speed can lead to a turbine trip, which would then subsequently require a turbine start up before restoring the system. If the overfrequency turbine ramp down is successful, the system restoration can be much quicker. The overfrequency monitoring feature of the relay can be used for this purpose at a generating location.

The Overfrequency feature is inhibited from operating unless the magnitude of the positive sequence or auxiliary voltage rises above a threshold. When the supply source is energized, the overfrequency delay timer is allowed to start timing only when the threshold is exceeded and the frequency is above the programmed Pickup level. In the same way, when an overfrequency condition starts the overfrequency delay timer and the voltage falls below the threshold before the timer has expired, the element resets without operating.

The Overfrequency element may be set as an instantaneous element with no time delay, or as a definite time delayed element. The Overfrequency element has a fixed minimum operating threshold to prevent undesired operation during periods of unavailable voltage. The input voltages are the three phase-to-phase voltages from delta connected VTs (PTs), three phase-to-ground voltages from wye connected VTs (PTs), or single phase auxiliary voltage.

The settings of this function are applied to each source to produce Pickup and Operate flags. The Overfrequency Pickup flag is asserted when the measured frequency of the specified source is above the PKP value and the voltage is above the threshold. The Overfrequency Operate flag is asserted if the element stays picked up for the time defined by the Pickup time delay. The element drops from Pickup without operation if the measured frequency decreases below 0.03 Hz of the Pickup value and stays dropped out for the defined time delay before the time for operation is reached.

The minimum operating voltage is set as a threshold below which the element is blocked.

Path: ***Setpoints*** > ***Protection*** > ***Group 1(6)*** > ***Frequency*** > ***Overfrequency 1(X)***

FUNCTION

Range: Disabled, Trip, Alarm, Latched Alarm, Configurable

Note: Relays with firmware version 4 and later have a `Latched Trip` *option*

Default: Disabled

SIGNAL INPUT

Range: dependent upon the order code

Default: Ph VT Bnk1-J2 or LEA Bnk1-J2, Dependent on order code

This setting provides selection of the frequency input.

FREQUENCY INPUT

Range: Normal, High-Speed

Default: Normal

You can select `Normal` or `High-speed` frequency as an input. Compared to the regular metered voltage frequency value, the high-speed frequency has the faster response but lesser accuracy. This setpoint is only available when Hi-Speed Freq is enabled under the path: ***Setpoints\Protection\Frequency\Common Setup.***

PICKUP

Range (normal frequency): 15.00 to 65.00 Hz in steps of 0.01 Hz

Range (high-speed frequency): 40.00 to 65.00 Hz in steps of 0.01 Hz

Default: 59 Hz

PICKUP DELAY

Range: 0.000 to 6000.000 s in steps of 0.001 s

Default: 2.000 s

DROPOUT DELAY

Range: 0.000 to 6000.000 s in steps of 0.001 s

Default: 2.000 s

MINIMUM VOLTAGE

Range: 0.000 to 1.250 x VT in steps of 0.001 x VT

Default: 0.700 x VT

The setting sets the minimum voltage for Overfrequency element operation specified per times VT.

> *Note:*
> *If the 3-phase VT uses a delta connection and SIGNAL INPUT is set to Ph VT Bnk1-J2, the positive sequence voltage is used as the supervision voltage. In such condition, the true supervision level is internally changed to $1/\sqrt{3}$ of the user setting since the base of VT here is the phase-phase voltage.*

Note:
If the 3-phase VT uses a delta connection, the positive sequence voltage is used as the supervision voltage. In such condition, the true supervision level is internally changed to $1/\sqrt{3}$ of the user setting since the base of VT here is the phase-phase voltage.

Note:
When the source input for tracking frequency differs from that used for Under Frequency function, due to frequency variations, you may encounter notable voltage measurement errors as the frequency of input signal moves away from the tracking frequency source input. For instance, when the setting `Frequency Input' is configured to auxiliary voltage (from the 4th VT), while the tracking frequency comes from the main source's three-phase voltages, any difference between the frequency of the auxiliary voltage (Vx) and the three-phase voltages (3VT) leads to a magnitude measurement error in Vx, caused by the deviation of Vx frequency from the main frequency.

BLOCK

Range: Off, Any FlexLogic operand

Default: Off

OUTPUT RELAY X

Range: Operate, Do Not Operate

Default: Do Not Operate

EVENTS

Range: Enabled, Disabled

Default: Enabled

TARGETS

Range: Disabled, Self-reset, Latched

Default: Self-reset

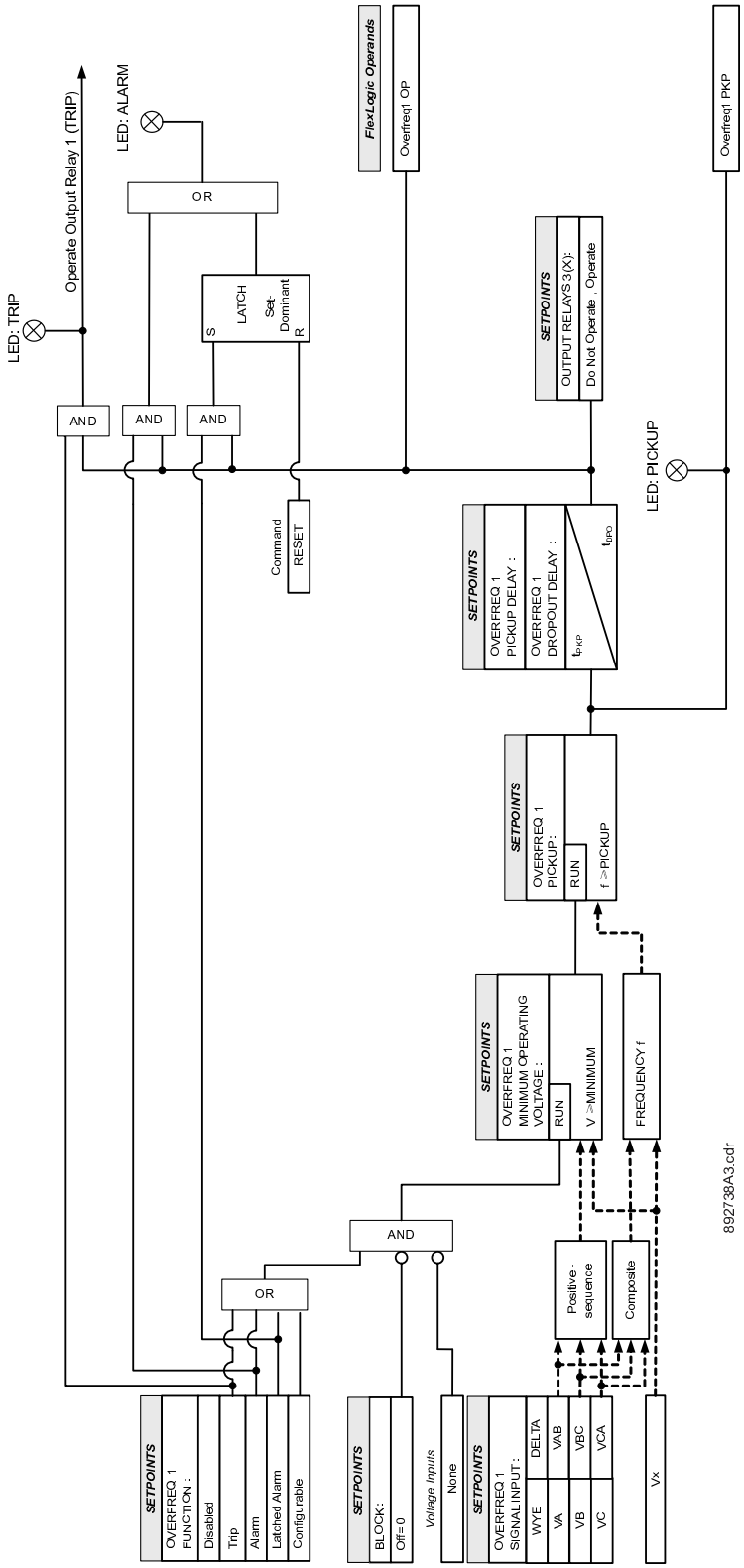

Figure 209: Overfrequency logic diagram

9.2.5.4 FREQUENCY RATE OF CHANGE (81R)

There is one Frequency Rate of Change protection element which can respond to rate of change of frequency with voltage, current and frequency supervision.

The Rate of Change element may be set as an instantaneous element with no time delay or as a definite time delayed element. The rate of change element has the programmable minimum operating voltage and current thresholds to prevent undesired operation under specific system conditions.

The settings of this function are applied to each source to produce Pickup and Trip flags.

The Frequency Rate of Change Pickup flag is asserted when the calculated frequency rate of change of the specified source is above the PKP value, the voltage and current are above the MINIMUM levels, and the frequency is within a certain range. The Frequency Rate of Change Trip flag is asserted if the element stays picked up for the time defined by the Pickup time delay. The element instantaneously drops from Pickup without operation, if the frequency rate of change drops below 96% of the Pickup value, before the time for operation is reached.

The minimum voltage and current thresholds select the minimum voltage and current below which the element is blocked.

The minimum and maximum frequencies set the operating frequency range out of which the element is blocked.

Path: ***Setpoints*** > ***Protection*** > ***Group 1(6)*** > ***Frequency*** > ***Frequency Rate of Change 1(X)***

FUNCTION

Range: Disabled, Trip, Alarm, Latched Alarm, Configurable

Note: Relays with firmware version 4 and later have a `Latched Trip` *option*

Default: Disabled

FREQUENCY INPUT

Range: Normal, High-Speed

Default: Normal

You can select `Normal` or `High-speed` frequency as an input. Compared to the regular metered voltage frequency value, the high-speed frequency has the faster response but lesser accuracy. This setpoint is only available when Hi-Speed Freq is enabled under the path: ***Setpoints\Protection\Frequency\Common Setup.***

TREND

Range: Decreasing, Increasing, Bi-directional

Default: Decreasing

The setting allows configuring of the element to respond to increasing or decreasing frequency, or to a frequency change in either direction.

PICKUP

Range: 0.10 to 15.00 Hz/sec in steps of 0.01 Hz/sec

Default: 0.50 Hz/sec

The setting specifies an intended Pickup threshold.

For applications monitoring a decreasing trend, set ***TREND*** to `Decreasing` and specify the Pickup threshold accordingly. The operating condition is: -df/dt > PKP.

For applications monitoring an increasing trend, set ***TREND*** to `Increasing` and specify the pickup threshold accordingly. The operating condition is: df/dt > PKP.

For applications monitoring rate of change of frequency in any direction, set ***TREND*** to “Bi-Directional” and specify the Pickup threshold accordingly. The operating condition can be either of the above two conditions.

PICKUP DELAY

Range: 0.000 to 6000.000 s in steps of 0.001 s

Default: 2.000 s

This setting provides a definite Pickup time delay. Instantaneous operation is selected by a Pickup time delay setting of 0.000 s.

MINIMUM FREQUENCY

Range (normal speed): 20.00 to 80.00 Hz in steps of 0.01 Hz

Range (high-speed): 40.00 to 70.00 Hz in steps of 0.01 Hz

Default: 45.00 Hz

The setting defines the minimum frequency level required for operation of the element.

The setting may be used to effectively block the feature based on frequency. For example, if the intent is to monitor an increasing trend but only if the frequency is already above certain level, this setting is set to the required frequency level.

MAXIMUM FREQUENCY

Range: 20.00 to 80.00 Hz in steps of 0.01 Hz (3.x.x, normal speed with 4.xx)

Range: 40.00 to 70.00 Hz in steps of 0.01 Hz (4.xx high speed)

Default: 65.00 Hz

The setting defines the maximum frequency level required for operation of the element.

The setting may be used to effectively block the feature based on frequency. For example, if the intent is to monitor a decreasing trend but only if the frequency is already below a certain level (such as for load shedding), this setting is set to the required frequency level.

VT INPUT

Range: dependent upon the order code

Default: Ph VT Bnk1-J2 or LEA Bnk1-J2, Dependent on order code

This setting provides selection of the frequency input.

MINIMUM VOLTAGE

Range: 0.000 to 1.250 x VT in steps of 0.001 x VT

Default: 0.700 x VT

The setting defines the minimum voltage level required for operation of the element. The supervising function responds to the positive-sequence voltage. Overvoltage supervision is used to prevent operation under specific system conditions such as faults.

Note:
If the 3-phase VT uses a delta connection and ***FREQUENCY INPUT*** *is set to Ph VT Bnk1-J2, the positive sequence voltage is used as the supervision voltage. In such condition, the true supervision level is internally changed to 1/√3 of the user setting since the base of VT here is the phase-phase voltage.*

Note:
If the 3-phase VT uses a delta connection, the positive sequence voltage is used as the supervision voltage. In such condition, the true supervision level is internally changed to 1/√3 of the user setting since the base of VT here is the phase-phase voltage.

CT INPUT

Range: dependent upon the order code

Default: CT Bank1-J1 or CT Bank1-K1, dependent on order code

This setting provides the current bank selection for the minimum current setting.

MINIMUM CURRENT

Range: 0.000 to 30.000 x CT in steps of 0.001 x CT

Default: 0.200 x CT

This setting defines the minimum current level required for operation of the element. The supervising function responds to the positive-sequence current. Typical application includes load shedding. Set the Pickup threshold to zero if no overcurrent supervision is required. The setting of zero suspends the current supervision.

BLOCK

Range: Off, Any FlexLogic operand

Default: Off

The element will be blocked when the selected operand is asserted.

OUTPUT RELAYS

Range: Operate, Do Not Operate

Default: Do Not Operate

Each relay can be selected to become either energized or de-energized when operated, and to operate as latched, self-resetting or pulsed.

EVENTS

Range: Enabled, Disabled

Default: Enabled

The selection of the Enabled setting enables the events of the function.

TARGETS

Range: Disabled, Self-reset, Latched

Default: Self-reset

This setting is used to define the operation of an element target message. When disabled, no target message is issued upon operation of the element. When set to `Self-Reset`, the target message and its LED indication follow the operate state of the element, and self-reset once the operate element condition clears. When set to `Latched`, the target message will remain visible after the element output returns to logic 0 until a RESET command is received by the relay.

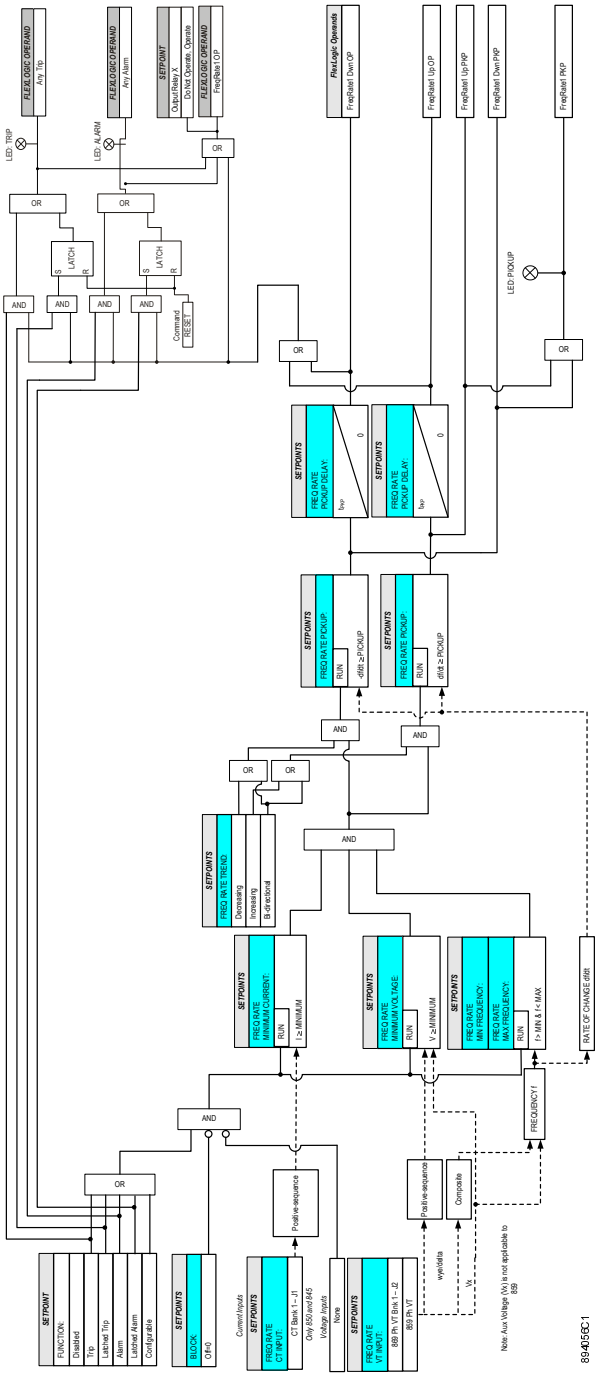

Figure 210: Frequency Rate-of-Change Protection logic diagram

9.2.5.5 FAST UNDERFREQUENCY

Frequency variations originate from unbalance conditions between generation and load. The main reasons for these conditions are given:

- Inadequate load forecast or deficient generation capacity programming.
- Busbars, generator group or interconnection feeders trip.
- System splits into islands.

When the frequency variation is small, the unbalance condition is corrected by the generator regulator. In the case of big frequency variations, the regulator is not able to correct itself, and the frequency value decreases which the danger of losing generation capacity.

If this underfrequency condition is not corrected a general blackout may occur.

In case of a shortage of generation capacity, the only possible way of recovering the stability of the system is through a selective load shedding scheme. The load disconnection is done when the frequency goes down below certain thresholds, in order to provide adequate reaction time for the generators to recover via their speed regulators.

It is important to point out that when the frequency decreases quickly, relay operation based on the detection of the underfrequency condition may not be enough to recover stability. In this case the load shedding scheme must also take into account the rate of change of frequency. This is done by calculating the frequency derivative over time. Loads are shed, based not only on an absolute (static) underfrequency threshold, but also on the dynamic rate of change of frequency.

The Fast Underfrequency element is mainly used in medium voltage and distribution substations as a selective load shedding scheme. By doing so, frequency recovers stability and potentially dangerous situations that might affect generators in other parts of the electrical system are avoided.

The Fast Underfrequency element measures frequency by detecting the consecutive voltage zero crossings and measuring the time between them. The measured frequency has a range between 20 to 70 Hz. The out-of-range measurement will be classified as invalid, which will not affect the behavior of the SET and RESET counters. The fast frequency is the average value of the measured frequency in a short window. Compared to the regular metered voltage frequency value, the fast frequency has the faster response but lesser accuracy.

Path: ***Setpoints*** > ***Protection*** > ***Group 1(6)*** > ***Frequency*** > ***Fast Underfrequency*** > ***Common Setup***

FREQUENCY INPUT

Range: dependent upon the order code

Default: Ph VT Bnk1-J2

This setting provides the selections for the frequency signal source.

MINIMUM VOLTAGE

Range: 0.10 to 1.10 x VT in steps of 0.01 x VT

Default: 0.40 x VT

The setting sets the minimum voltage for all Fast Underfrequency elements operation specified per times VT. The setpoint prevents incorrect operation if the voltage decreases below the threshold.

Note:
*If the 3-phase VT uses a delta connection and **SIGNAL INPUT** is set to Ph VT Bnk1-J2, the positive sequence voltage is used as the supervision voltage. In such condition, the true supervision level is internally changed to 1/√3) of the user setting since the base of VT here is the phase-phase voltage.*

Note:
If the 3-phase VT uses a delta connection, the positive sequence voltage is used as the supervision voltage. In such condition, the true supervision level is internally changed to 1/√3 of the user setting since the base of VT here is the phase-phase voltage.

SEMICYCLES SET

Range: 1 to 20 in steps of 1

Default: 3

This setting specifies a SET counter prior to picking up. When the frequency is detected to be below the setting (and the rate of change is below the setting as well if in the DF/DT Type), the element starts counting for however many consecutive half-periods (semi cycles) it continues below the setting. If the SET counter is

reached, the pickup signal of the element is activated and the element starts the delay timer set independently for each element. However, the invalid frequency measurement will not affect the SET counter.

SEMICYCLES RESET

Range: 0 to 4 in steps of 1

Default: 0

If the frequency transiently restores and pickup conditions are not satisfied, the element freezes the SET counter to pick up and starts counting the number of semi cycles to reset the element. If the count of semi cycles to reset reaches the value set in the setting ***SEMICYCLES RESET***, then the element is reset. On the other hand, if the pickup conditions are satisfied before reset, the element will continue the count of semi cycles to set from where it was left. The invalid frequency measurement will not affect the SET counter.

The ***SEMICYCLES SET*** and ***SEMICYCLES RESET*** settings are common for the eight Fast Underfrequency elements.

Path: ***Setpoints*** > ***Protection*** > ***Group 1(6)*** > ***Frequency*** > ***Fast Underfrequency*** > ***Fast Underfreq1(X)***

FUNCTION

Range: Disabled, Trip, Alarm, Latched Alarm, Configurable

Note: Relays with firmware version 4 and later have a `Latched Trip` *option*

Default: Disabled

TYPE

Range: UF Only, UF and DF/DT

Default: UF Only

This setting specifies the input to the element. The *UF Only* type uses only the frequency value. The *UF and DF/DT* type considers both frequency and rate of change of frequency (df/dt) as the input.

UNDERFREQENCY PICKUP

Range: 20.00 to 65.00 Hz in steps of 0.01 Hz

Default: 59.00 Hz

This setpoint sets the Underfrequency Pickup level.

RATE OF CHANGE PICKUP

Range: -10.00 to -0.10 Hz/sec in steps of 0.01 Hz/sec

Default: -0.75 Hz/sec

This setpoint sets the Rate of Change Pickup level.

PICKUP DELAY

Range: 0.000 to 6000.000 s in steps of 0.001 s

Default: 1.000 s

RESET DELAY

Range: 0.000 to 6000.000 s in steps of 0.001 s

Default: 0.000 s

BLOCK

Range: Off, Any FlexLogic operand

Default: Off

OUTPUT RELAY X

Range: Operate, Do Not Operate

Default: Do Not Operate

EVENTS

Range: Enabled, Disabled

Default: Enabled

TARGETS

Range: Self-reset, Latched, Disabled

Default: Self-reset

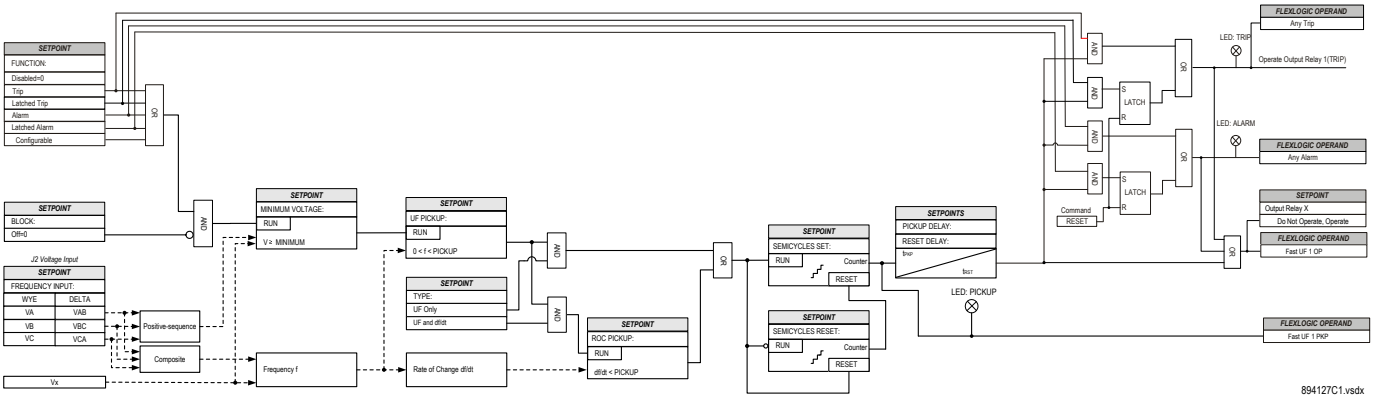

Figure 211: Fast Underfrequency logic diagram

CHAPTER 10

MONITORING

10.1 CHAPTER OVERVIEW

This chapter contains the following sections:

Chapter Overview	454
Monitoring Overview	455
Breaker monitoring	456
Functions	469
Harmonic Detection	493
Power Quality/Voltage Disturbance	496
Transient Ground Fault Detection	502
RTD Temperature	515
RTD Trouble	520
Loss of Communications	521
Incipient Cable Fault	523

10.2 MONITORING OVERVIEW

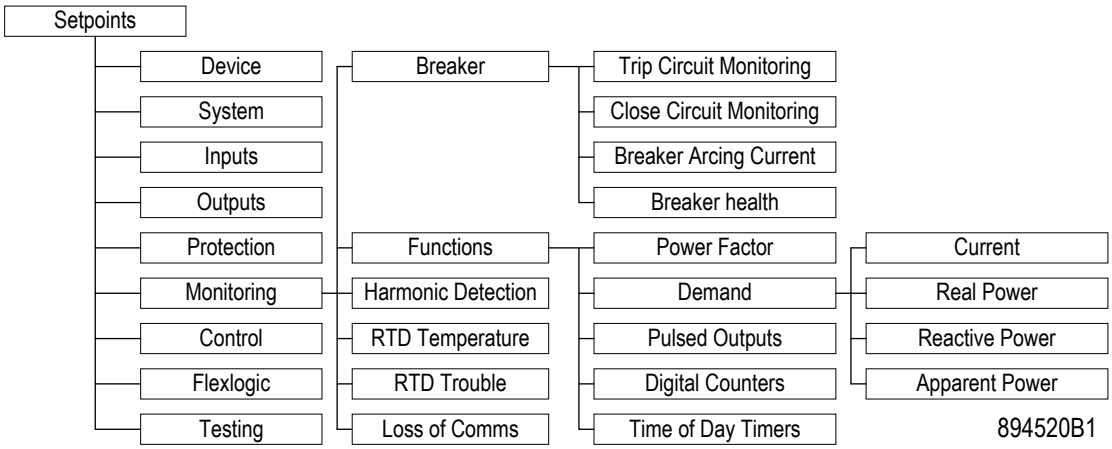

Figure 212: Monitoring Display Hierarchy

10.3 BREAKER MONITORING

10.3.1 TRIP AND CLOSE CIRCUIT MONITORING

The first and second Form A relay outputs on slot F include a circuit to monitor the DC voltage across the output contact when it is open. To do that, an external jumper is wired between the terminals **FA_1 COM** and **FA_1 OPT/V** for the Trip coil monitoring, or/and **FA_2 COM** and **FA_2 OPT/V** for the Close coil monitoring.

The monitor contains a level detector whose output is set to logic 1 (ON) when the voltage is above 20 volts. The voltage monitor is used to check the health of the overall trip and closing circuit.

The two figures below show the two different connections of the breaker trip and close coils to the relay's trip and close output relays for either no voltage monitoring and for voltage monitoring of the circuits.

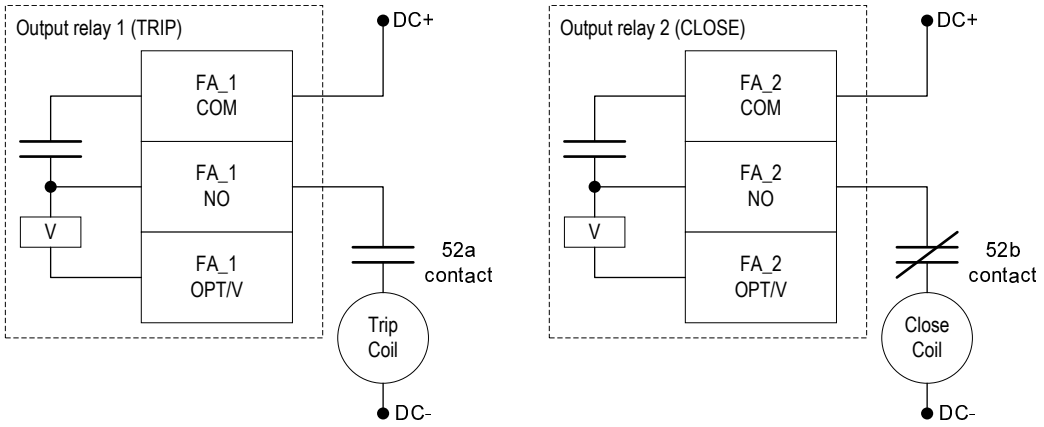

Figure 213: Coil Circuits without Monitoring

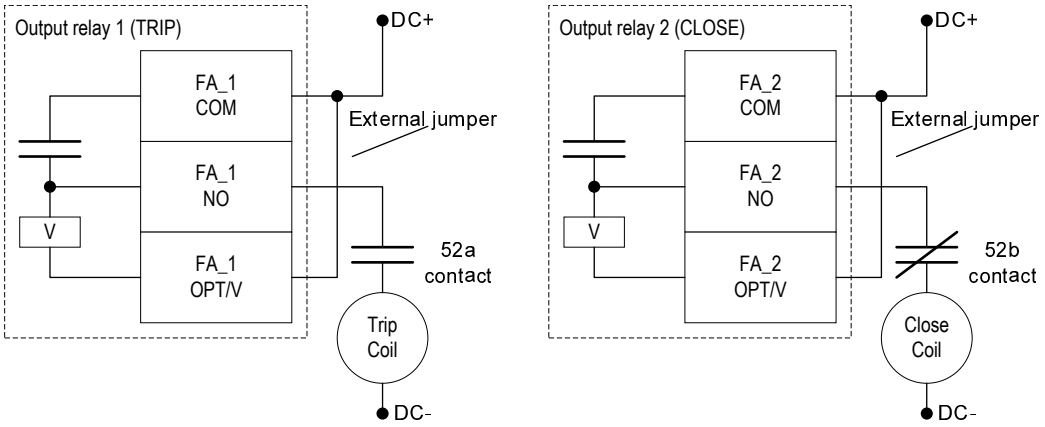

Figure 214: Coil Circuits with Monitoring

To monitor the trip coil circuit integrity, use the relay terminals FA_1 NO and FA_1 COM to connect the Trip coil, and provide a jumper between terminals FA_1 COM and FA_1 OPT/V (voltage monitor).

To monitor the close coil circuit integrity, use the relay terminals FA_2 NO and FA_2 COM to connect the Close coil and provide a jumper between terminals FA_2 COM and FA_2 OPT/V (voltage monitor).

Some applications require monitoring of the Trip coil or/and Close coil continuously, regardless of the breaker position (open or closed). This can be achieved by connecting a suitable resistor across the auxiliary contacts. With such connections, the trickle current is maintained by the resistor. For these applications the setting for the Bypass Breaker Status should be enabled.

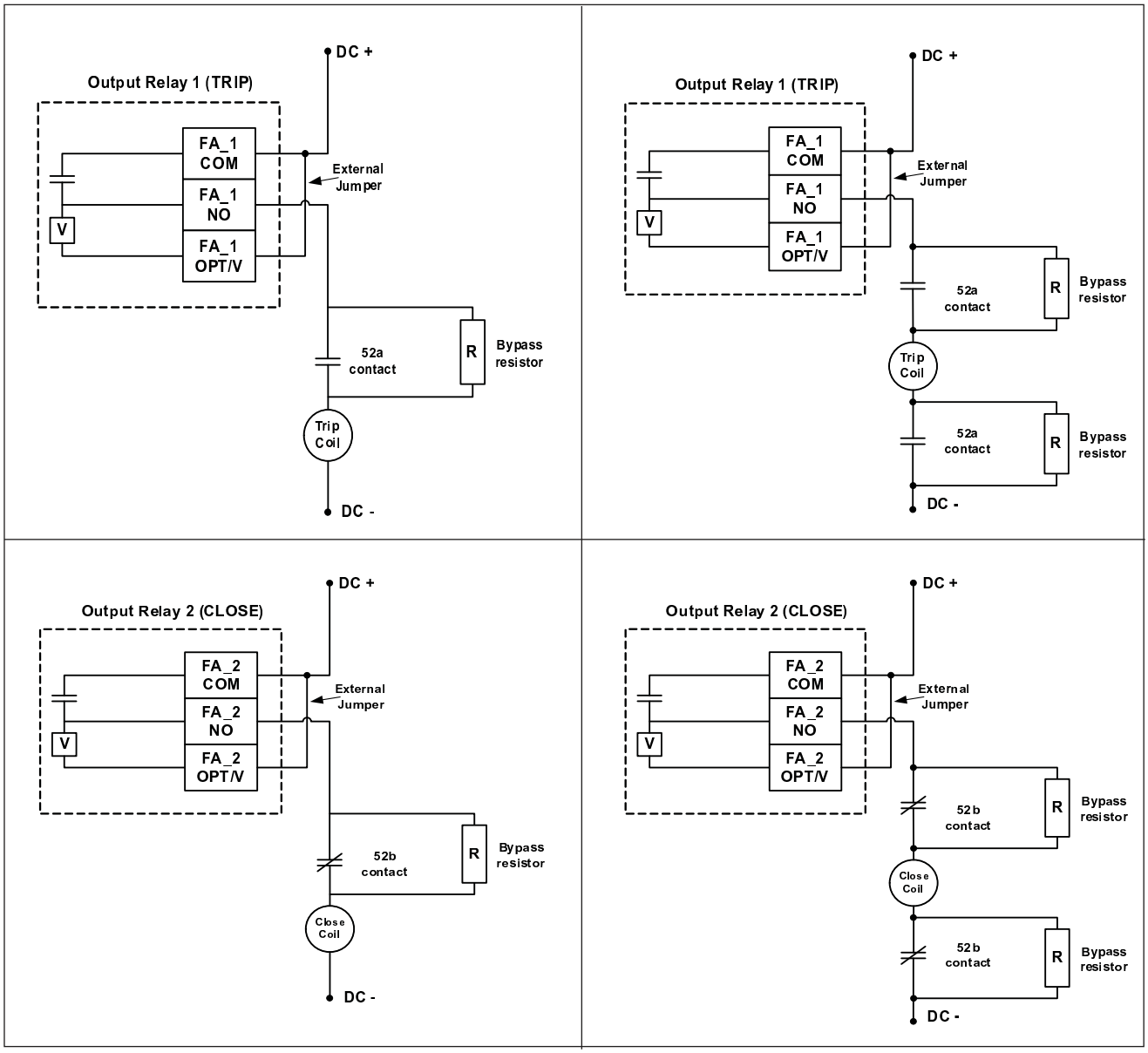

Figure 215: Trip and Close Coil Circuit with Continuous Monitoring

The value of the resistor is shown in the following table:

Power Supply (V DC)	Resistance (Ohms)	Power (Watts)
24	1000	2
48	10000	2
110	25000	5
125	25000	5
220	50000	5

Warning:
The Trip and Close Contacts must be considered unsafe to touch when the relay is energized.

Path: ***Setpoints*** > ***Monitoring*** > ***Breaker 1*** > ***Trip Circuit Monitoring***

TRIP CIRCUIT MONITORING

FUNCTION:

Range: Disabled, Latched Alarm, Alarm, Configurable

Default: Disabled

PICKUP DELAY:

Range: 0.000 to 6000.000 s in steps of 0.001 s

Default: 10.000 s

DROPOUT DELAY:

Range: 0.000 to 6000.000 s in steps of 0.001 s

Default: 0.000 s

This setting provides selection for reset time delay used to delay the dropout of the detection of the TCM element.

TRIP RELAY SELECT:

Default: Relay 1

Range: Off, Relay X

Any output relay from the list of available output relays can be programmed for breaker tripping coil monitoring.

> *Note:*
> *It is recommended to select the same Trip Relay set under the "Breaker: Trip Relay Select" option.*

BYPASS BREAKER STATE:

Range: Enabled, Disabled

Default: Disabled

Set the Bypass Breaker State to Enabled when a by-pass resistor is connected across the breaker auxiliary contact for continuous Trip circuit monitoring. The circuits are monitored regardless of breaker position.

BLOCK:

Range: Off, Any FlexLogic operand

Default: Off

OUTPUT RELAY X

Range: Do Not Operate, Operate

Default: Do Not Operate

EVENTS:

Range: Disabled, Enabled

Default: Enabled

TARGETS:

Default: Self-reset

Range: Disabled, Self-reset, Latched

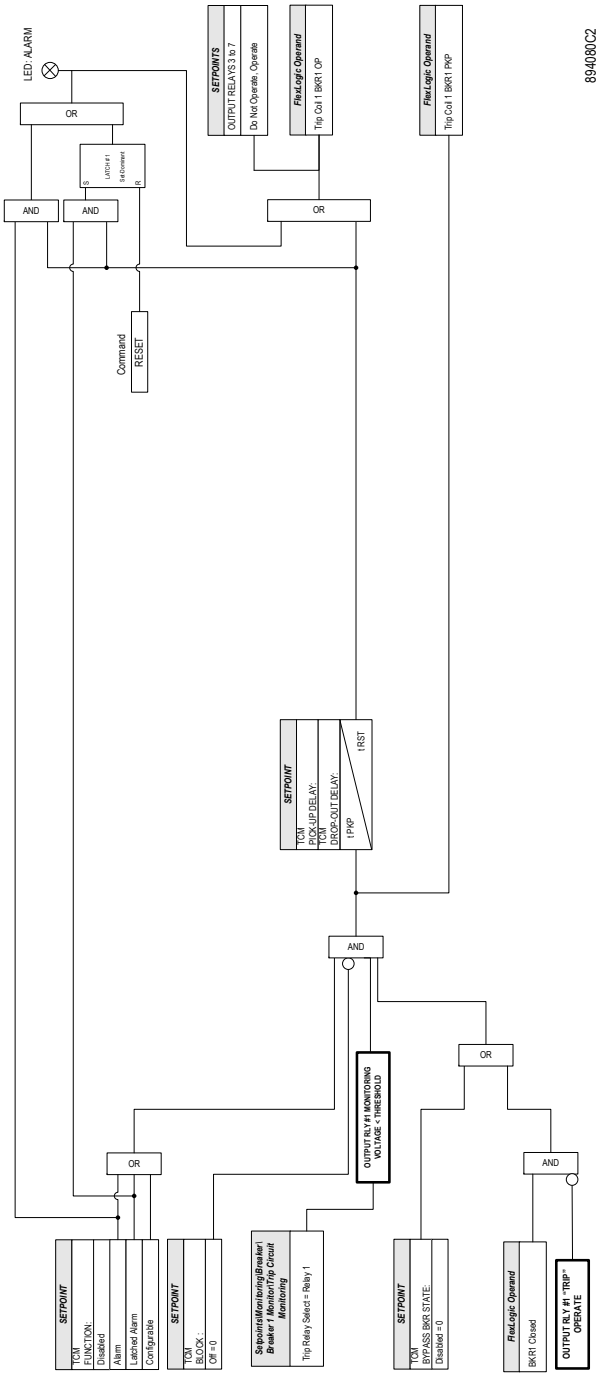

Figure 216: Trip Circuit Monitoring Diagram

CLOSE CIRCUIT MONITORING

Path: ***Setpoints*** > ***Monitoring*** > ***Breaker 1*** > ***Close Circuit Monitoring***

FUNCTION:

Range: Disabled, Latched Alarm, Alarm, Configurable

Default: Disabled

PICKUP DELAY:

Default: 10.000 s

Range: 0.000 to 6000.000 s in steps of 0.001 s

DROPOUT DELAY:

Range: 0.000 to 6000.000 s in steps of 0.001 s

Default: 0.000 s

CLOSE RELAY SELECT:

Default: Relay 2

Range: Off, Relay X

Any output relay from the list of available output relays can be programmed for breaker coil closing monitoring.

> *Note:*
>
> *We recommend selecting the same Trip Relay set under the* ***Breaker: Close Relay Select*** *option.*

BYPASS BREAKER STATE:

Range: Enabled, Disabled

Default: Disabled

Set the Bypass Breaker State to Enabled when a by-pass resistor is connected across the breaker auxiliary contact for continuous Close circuit monitoring. The circuits are monitored regardless of breaker position.

OUTPUT RELAY X

Range: Do Not Operate, Operate

Default: Do Not Operate

BLOCK:

Default: Off

Range: Off, Any FlexLogic operand

EVENTS:

Range: Disabled, Enabled

Default: Enabled

TARGETS:

Range: Disabled, Self-reset, Latched

Default: Self-reset

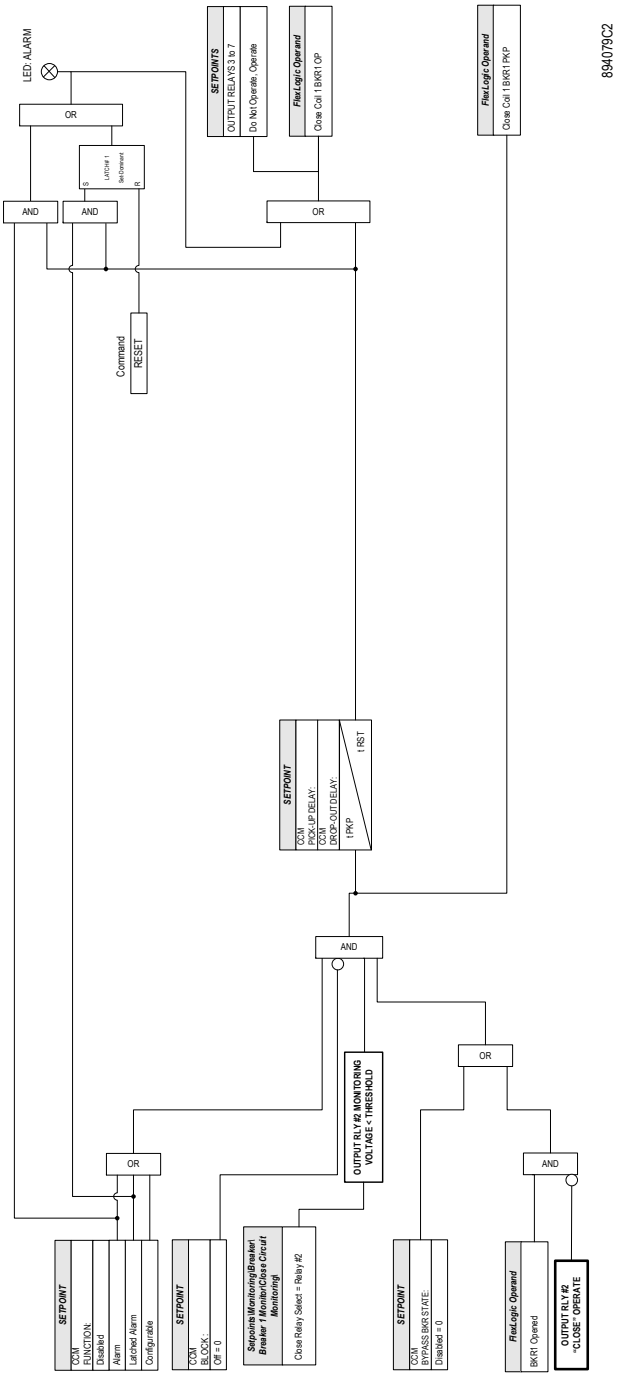

Figure 217: Close Circuit Monitoring Diagram

10.3.2 BREAKER ARCING CURRENT

The relay provides one Breaker Arcing Current element. This element calculates an estimate of the per-phase wear on the breaker contacts by measuring and integrating the current squared passing through the breaker contacts as an arc. These per-phase values are added to accumulated totals for each phase and compared to a programmed threshold value. When the threshold is exceeded in any phase, the relay can set an output operand and set an alarm. The accumulated value for each phase can be displayed as an actual value.

The same output operands that are selected to operate the Trip output relay that is used to trip the breaker indicating a tripping sequence has begun, are used to initiate this feature. A time delay is introduced between initiation and starting of integration to prevent integration of current flow through the breaker before the contacts

have parted. This interval includes the operating time of the output relay, any other auxiliary relays and the breaker mechanism. For maximum measurement accuracy, the interval between the change-of-state of the operand (from 0 to 1) and contact separation should be measured for the specific installation. Integration of the measured current continues for 100 ms, which is expected to include the total arcing period.

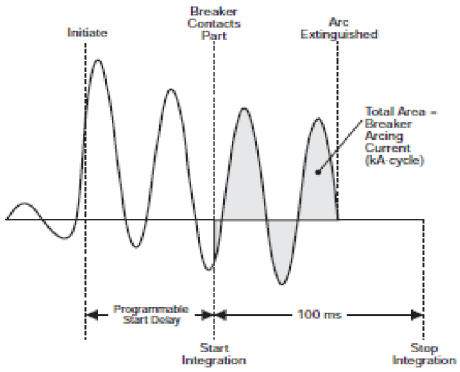

Figure 218: Breaker Arcing Current Measurement

Path: ***Setpoints*** > ***Monitoring*** > ***Breaker*** > ***BKR 1 Monitor*** > ***BKR 1 Arcing Current***

FUNCTION

Range: Disabled, Alarm, Latched Alarm, Configurable

Default: Disabled

SIGNAL INPUT (not used in 859)

Range: CT Bank 1 -J1, CT Bank 2 -K1, CT Bank 3 -K2

Default: CT Bank 1 -J1

This setting provides selection of the current input source.

INITIATION

Range: Off, Any FlexLogic operand

Default: Off

The setpoint selects the FlexLogic operand, digital input, virtual input or remote input that initiates the Breaker Arcing Current scheme, typically the Trip signals from internal protection functions.

DELAY

Range: 0.000 to 6000.00 s in steps of 0.001 s

Default: 0.030 s

The setpoint provides a delay interval between the time the tripping sequence is initiated and the time the breaker contacts are expected to part, starting the integration of the measured current.

ALARM LEVEL

Range: 0 to 50000 kA2-c in steps of 1 kA2-c

Default: 1000 kA2-c

The setpoint specifies the threshold value (kA2-cycle) above which the output operand is set.

OUTPUT RELAYS X

Range: Do Not Operate, Operate

Default: Do Not Operate

BLOCK

Range: Off, Any FlexLogic operand

Default: Off

EVENTS

Range: Enabled, Disabled

Default: Enabled

TARGETS

Range: Self-reset, Latched, Disabled

Default: Self-reset

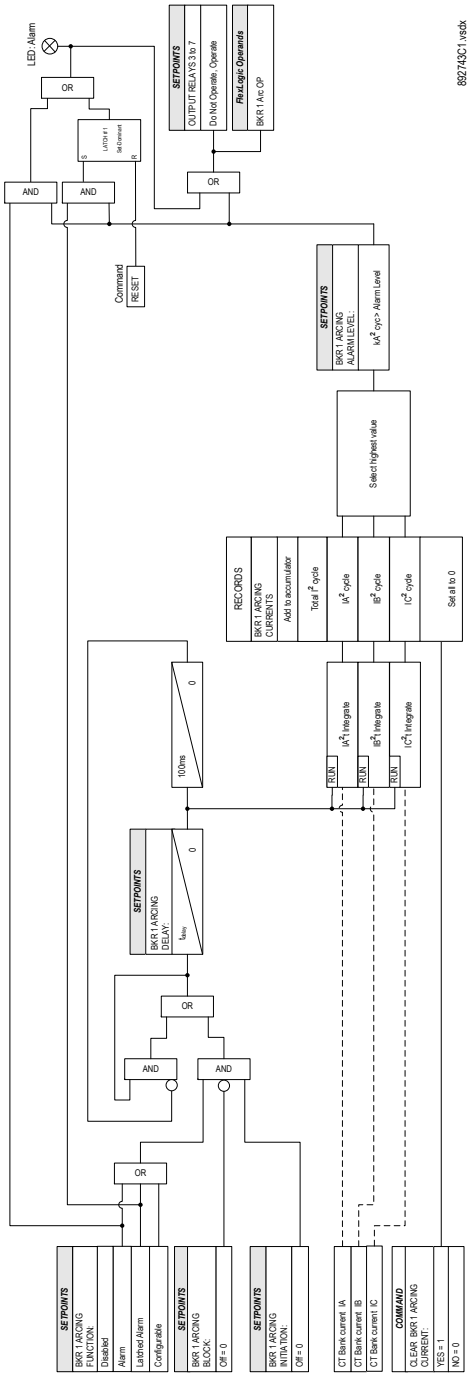

Figure 219: Breaker Arcing Current logic diagram

10.3.3 BREAKER HEALTH

The relay provides breaker health information by monitoring and analyzing the operation count, arcing energy of breaking current, arcing time, tripping time, closing time and spring charging time if applicable. The breaker health status depends on many factors, such as permissible operation number, magnitude of breaking current, mechanical wear and contact wear.

The operation count is able to give direct information by comparing it with the permissible operation number. The longer tripping time and closing time can provide an approximate estimation of trip/close coils and mechanical wear. The increasing spring charging time may imply developing problems in motor and spring mechanisms. Meanwhile, the increase in arcing energy of the breaking current may reflect the possibility of contact wear. Longer arcing time

may suggest the loss of dielectric strength in the arc chamber. If the arcing energy or any of the time intervals is above the related Pickup levels for the use-defined times, the Alarm Led is lit.

The scheme is equipped with three incomplete sequence timers for Trip/Close time, arc time and spring charge time respectively. So it automatically resets the related time interval after the programmed delay.

A breaker operation function is also included, where breaker operation failure is caused by either of the following conditions:

- The breaker does not respond to a Trip command within the programmed breaker operation delay time.
- The breaker does not respond to a Close command within the programmed time.

Path: ***Setpoints*** > ***Monitoring*** > ***Breaker 1*** > ***Breaker Health***

FUNCTION

Range: Disabled, Alarm, Latched Alarm, Configurable

Default: Disabled

MODE

Range: Detection, Monitoring

Default: Detection

The Breaker Health has two running modes: detection and monitoring. Since the monitored time intervals differ for different breaker types and manufacturers, the detection mode can be used to help set the Pickup settings based on the historical true values. The operation count, arcing energy of the breaking current, arcing time, tripping time, closing time and spring charging time are measured and displayed in ***Records*** > ***Breaker Health***, but the element does not pick up when in detection mode. Monitoring mode is the normal mod e, wherein measurements are analyzed and the element may pick up accordingly.

PRESET TRIP COUNTER

Range: 0 to 100000 in steps of 1

Default: 0

This setting pre-sets the actual operation number when the relay is starting in service or the record is cleared.

TRIP TRIGGER

Range: Off, Any FlexLogic operand

Default: Off

This setting assigns the trip initiation signal.

CLOSE TRIGGER

Range: Off, Any FlexLogic operand

Default: Off

This setting assigns the close initiation signal.

SPRING CHARGE STATUS

Range: Off, Any FlexLogic operand

Default: Off

The setting selects the signal to show the status of Spring Charge. Normally, the contact input connected to the auxiliary contact of the limit switch can be used.

TRIP TIME PICKUP

Range: 0.000 to 6000.000 s in steps of 0.001 s

Default: 0.050 s

The setting sets the Pickup level of the Trip time. The Trip time interval is initiated by the Trip Trigger signal and stopped by the Open Status signal.

CLOSE TIME PICKUP

Range: 0.000 to 6000.000 s in steps of 0.001 s

Default: 0.050 s

The setting sets the Pickup level of the Close time. The Close time interval is initiated by the Close Trigger signal and stopped by the Close Status signal.

INCOMPLETE TRP/CLS TIME

Range: 0.000 to 6000.000 s in steps of 0.001 s

Default: 0.100 s

The setting declares a breaker operation failure condition if the breaker does not respond within this time delay. The setting should be greater than the Trip time PKP value and Close time PKP value.

ARC TIME PICKUP

Range: 0.000 to 6000.000 s in steps of 0.001 s

Default: 0.100 s

The setting sets the Pickup level of the Arc time. The Arc time is initiated by the Open Status signal and stopped when the current samples in one cycle are less than 0.02 CT. Then the Arc time is equal to the calculated time interval minus one cycle.

INCOMPLETE ARC TIME

Range: 0.000 to 6000.000 s in steps of 0.001 s

Default: 0.300 s

The setting declares an Arc time failure condition if there are currents flowing through the breaker after this time delay. This setting should be greater than the Arc time PKP value.

SPRING CHARGE TIME PICKUP

Range: 0.000 to 6000.000 s in steps of 0.001 s

Default: 15.000 s

This setting sets the Pickup level of the Spring Charge time. The Spring Charge time is measured from the pulse duration of the Spring Charge Status.

INCOMPLETE CHARGE TIME

Range: 0.000 to 6000.000 s in steps of 0.001 s

Default: 45.000 s

The setting declares a Charge time failure condition if the spring charging process is not finished after this time delay. The setting should be greater than the Charge time PKP value.

ARC ENERGY PICKUP

Range: 1 to 100000 kA2-c in steps of 1 kA2-c

Default: 1000 kA2-c

The setting sets the Pickup level of the arc energy. The arc energy value is calculated in the Breaker Arcing Current element.

> *Note:*
> *The arc energy is calculated by the breaker arcing current element. If the breaker arcing current element is disabled, the arc energy is not calculated and this setting should not be used. The arc energy used here is the individual value for each trip and not the accumulated value recorded in the Breaker Arcing Current element.*

ALARM COUNTER

Range: 1 to 100 in steps of 1

Default: 5

The setting sets the alarm counter level. One counter is used to accumulate the Pickup data from all monitoring quantities. If the counter value is above the alarm counter level, the LED is lit and one operand is asserted.

BLOCK

Range: Off, Any FlexLogic operand

Default: Off

OUTPUT RELAY X

Range: Do Not Operate, Operate

Default: Do Not Operate

EVENTS

Range: Enabled, Disabled

Default: Enabled

TARGETS

Range: Disabled, Self-reset, Latched

Default: Self-reset

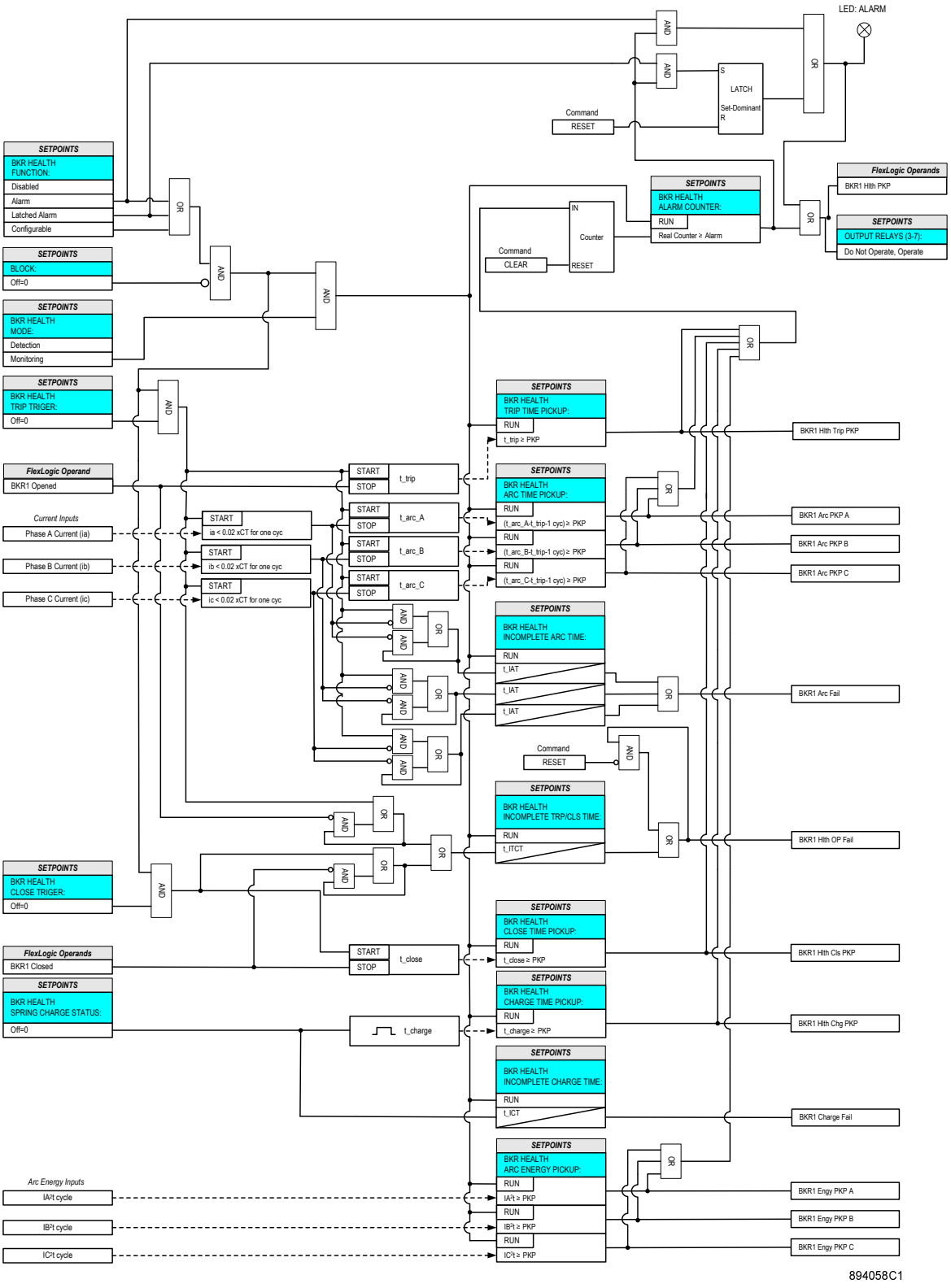

Figure 220: Breaker Health and Operation logic diagram

10.4 FUNCTIONS

10.4.1 POWER FACTOR (55)

It is generally desirable for a system operator to maintain the Power Factor as close to unity as possible to minimize both costs and voltage excursions. Since the Power Factor is variable on common non-dedicated circuits, it is advantageous to compensate for low (lagging) Power Factor values by connecting a capacitor bank to the circuit when required. The relay allows two stages of capacitance switching for Power Factor compensation.

The relay calculates the average Power Factor in the three phases as follows:

Average Power

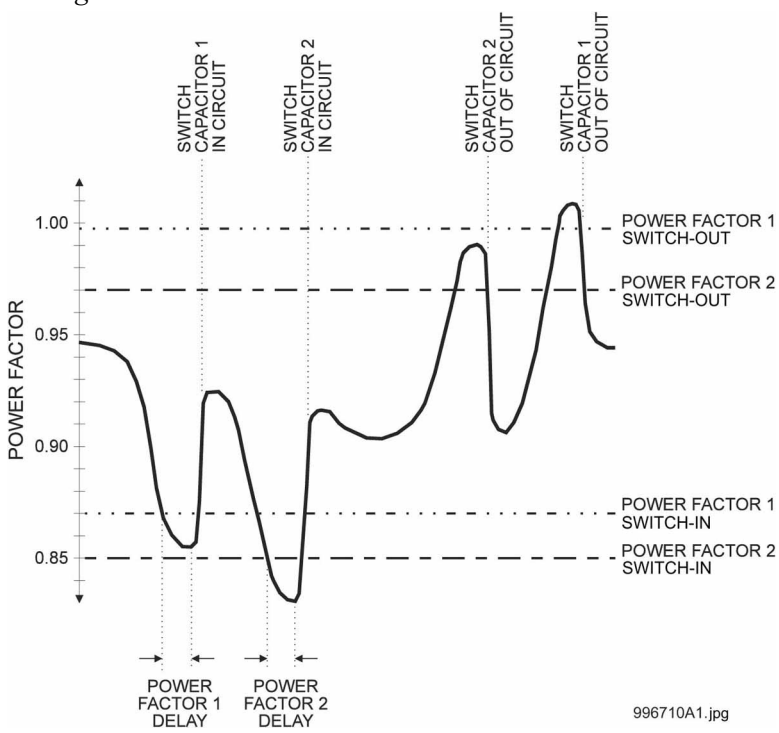

Factor = Total 3-Phase Real Power / Total 3-Phase Apparent Power

Figure 221: Capacitor bank switching

When the measured Power Factor becomes more lagging or leading (depending on the user setting) than the Switch-In level, the relay operates a user-selected output contact. This output can be used to control a switching device which connects capacitance to the circuit, or to signal an alarm to the system operator. After entering this state, when the Power Factor becomes less lagging or leading than the Power Factor Switch-Out level for a time greater than the set delay, the relay resets the output contact to the non-operated state.

For delta-connected VTs, the Power Factor feature is inhibited from operating unless all three voltages are above a threshold and one or more currents are above 0.002 x CT. Power Factor element delay timers are only allowed to time when the voltage threshold is exceeded on all phases and the Power Factor remains outside of the region between the programmed Switch-In and Switch-Out levels. In the same way, when a Power Factor condition starts the Power Factor delay timer, if all three phase voltages fall below the threshold before the timer has timed-out, the element resets without operating. A loss of voltage during any state returns the Power Factor element(s) to the Reset state.

For wye-connected VTs, the power factor value is calculated from the valid phase(s) with a voltage that is above a user-selected threshold and a current that is above 0.002 x CT. Power Factor element delay timers are only allowed to time when the supervision conditions are met and the Power Factor remains outside of the region between the

programmed Switch-In and Switch-Out levels. In the same way, when a Power Factor condition starts the Power Factor delay timer, if one or more valid phases no longer satisfy the supervision conditions, the power factor will be re-calculated based on the still valid phase(s). If the element is continuously asserted with the new power factor value, the timer will continue timing, otherwise, the element will reset without operating.

The following figure illustrates the conventions established, where the negative value means the lead power factor, and the positive value means the lag power factor.

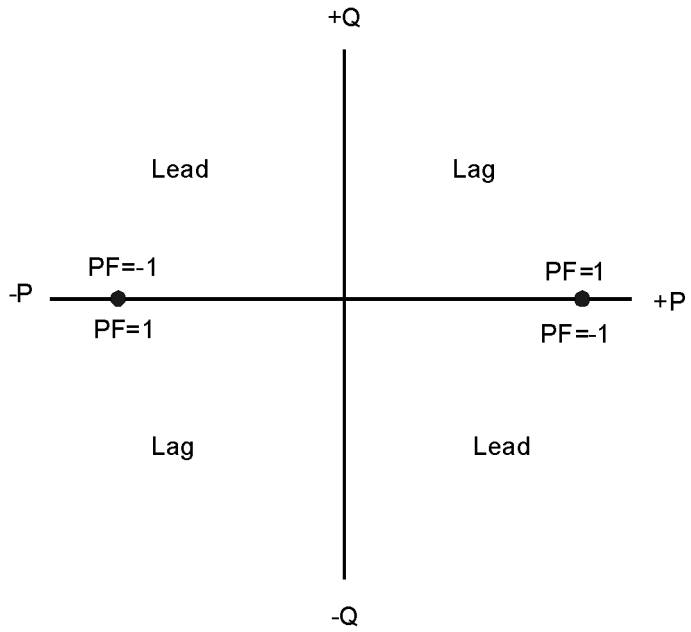

Figure 222: Conventions for Power Factor

For example, the applications of Switch-In and Switch-Out levels are shown in the figures below.

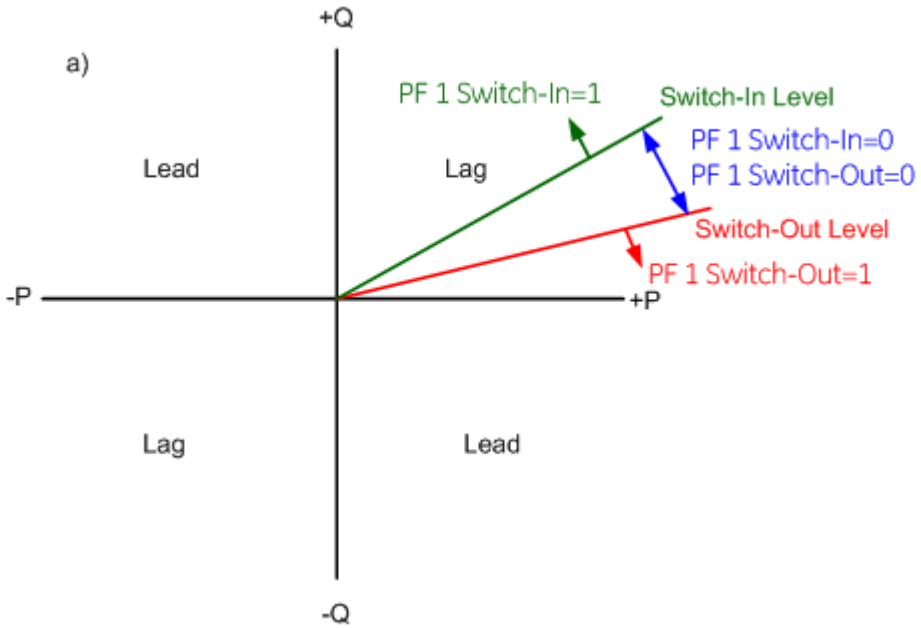

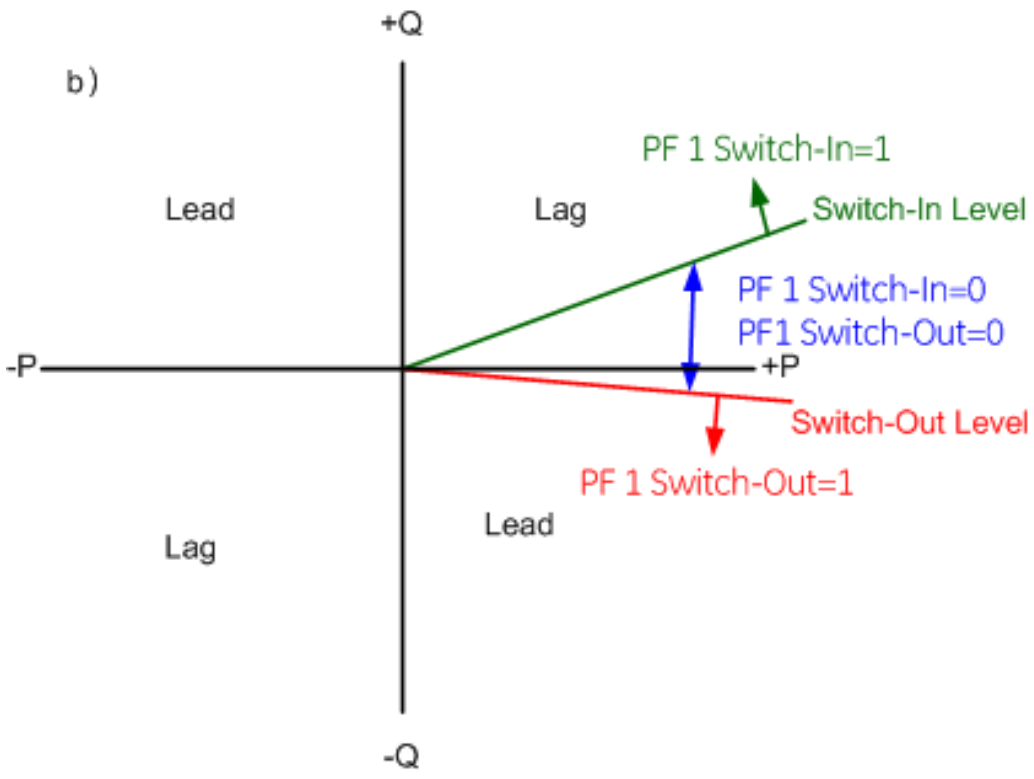
+Q
b)
PF 1 Switch-In=1
Lead
Lag
Switch-In Level
PF 1 Switch-In=0
PF1 Switch-Out=0
-P
+P
Switch-Out Level
PF 1 Switch-Out=1
Lead
Lag
-Q

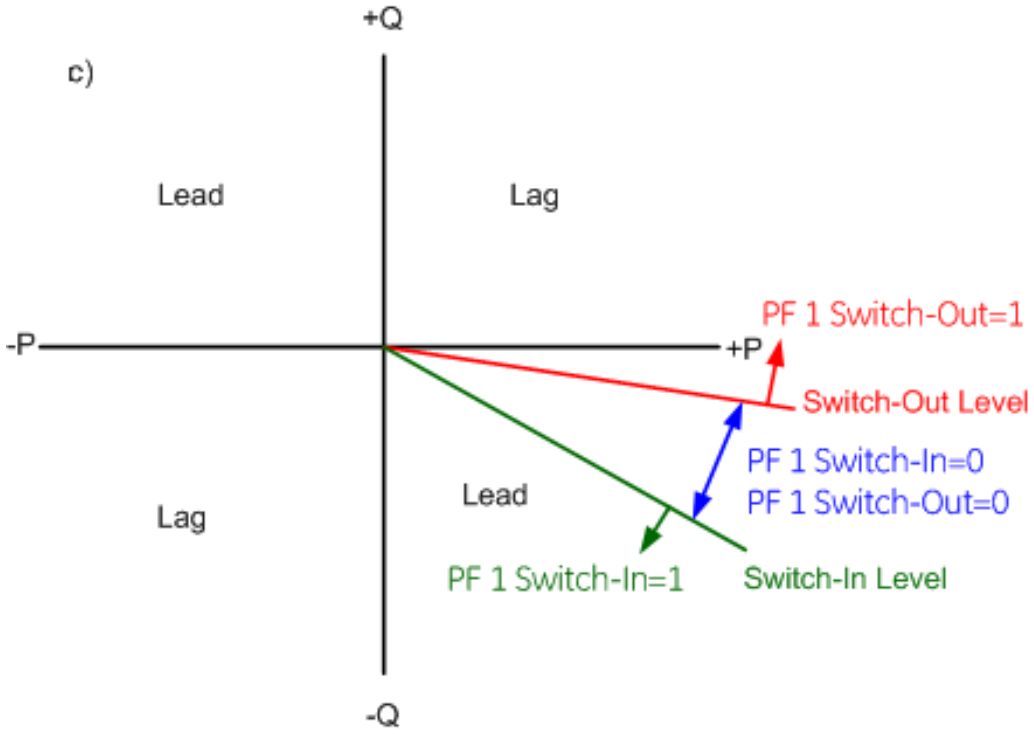
+Q
c)
Lead
Lag
PF 1 Switch-Out=1
-P
+P
Switch-Out Level
PF 1 Switch-In=0
PF 1 Switch-Out=0
Lead
Lag
PF 1 Switch-In=1
Switch-In Level
-Q

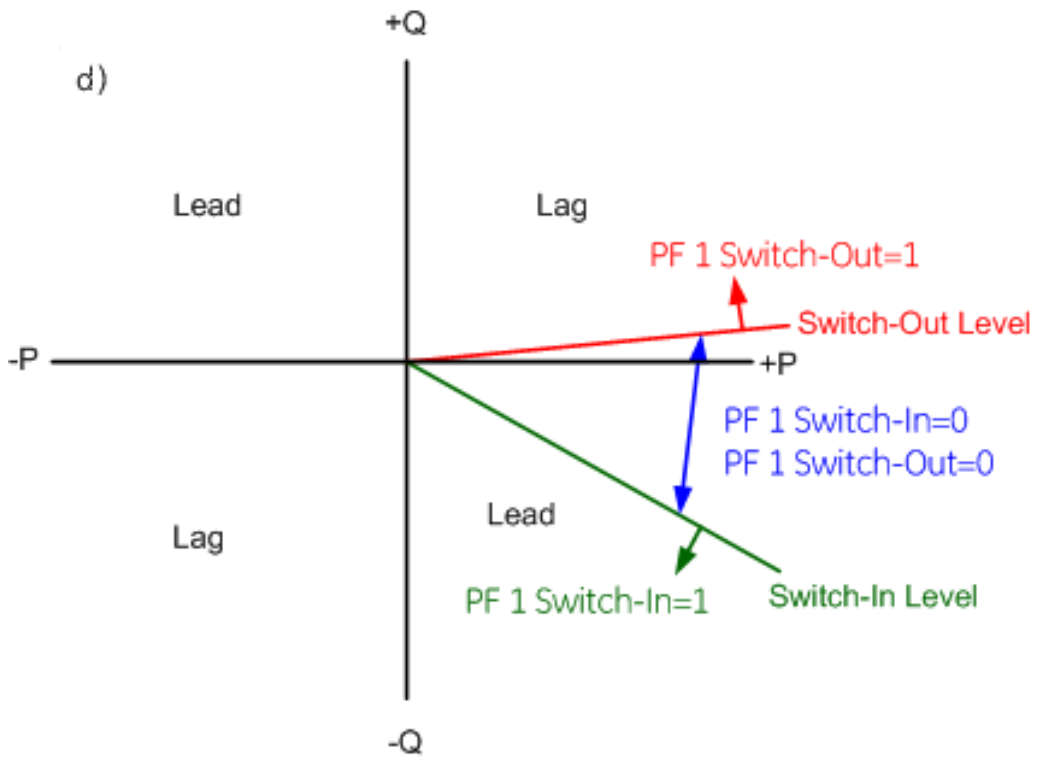

Figure 223: Switch in and switch out levels

The settings of this function produces Switch-In, Switch-Out and Operate flags. The Power Factor Switch-In flag is asserted when the absolute value of the calculated Power Factor is below the Switch-In value, and supervision conditions are satisfied. The Power Factor Operate flag in the Switch-In level is asserted if the element stays switched-in for the time defined by the time delay. After the element drops from Switch-In, the Power Factor Switch-Out flag is asserted when the Power Factor passes the Switch-Out value. The Power Factor Operate flag in the Switch-Out level is asserted if the element stays switched out for the time defined by the time delay.

The minimum operating voltage is set as a threshold below which the element is reset.

Path: ***Setpoints*** > ***Monitoring*** > ***Functions*** > ***Power Factor 1(X)***

FUNCTION

Range: Disabled, Alarm, Latched Alarm, Configurable

Default: Disabled

SIGNAL INPUT (not used in 859)

Range: Power 1, Power 2

Default: Power 1

This setting provides the selection for the power input. (850-D only)

SWITCH-IN

Range: -0.01 to -0.99, 1, 0.99 to 0.01 (for 8 Series EnerVista D&I Setup software Setup software: 0.01 Lead, 0.02 Lead, …, 0.98 Lead, 0.99 Lead, 1, 0.99 Lag, 0.98 Lag, …, 0.02 Lag, 0.01 Lag)

Default: 0.08 Lag

The setting sets the Power Factor Switch-In level. The negative value is used to denote the lead power factor, and the positive value is used for the lag power factor.

SWITCH-OUT

Range: -0.01 to -0.99, 1, 0.99 to 0.01 (for 8 Series EnerVista D&I Setup software Setup software: 0.01 Lead, 0.02 Lead, …, 0.98 Lead, 0.99 Lead, 1, 0.99 Lag, 0.98 Lag, …, 0.02 Lag, 0.01 Lag)

Default: 1.00

The setting sets the Power Factor Switch-Out level. The negative value is used to denote the lead power factor, and the positive value is used for the lag power factor.

> *Note:*
> *SWITCH-IN and SWITCH-OUT are mutually exclusive settings. See the application examples above which show no common zone in which both SWITCH-IN and SWITCH-OUT are asserted.*

DELAY

Range: 0.000 to 6000.000 s in steps of 0.001 s

Default: 50.000 s

The setting provides the definite Switch-In and Switch-Out time delay. Instantaneous operation is selected by the time delay setting of 0.000 s.

MINIMUM VOLTAGE

Range: 0.00 to 1.25 x VT in steps of 0.01 x VT

Default: 0.30 x VT

The setting sets the minimum voltage for Power Factor element operation specified per times VT.

OUTPUT RELAY X

Range: Do Not Operate, Operate

Default: Do Not Operate

BLOCK

Range: Off, Any FlexLogic operand

Default: Off

EVENTS

Range: Enabled, Disabled

Default: Enabled

TARGETS

Range: Disabled, Self-reset, Latched

Default: Self-reset

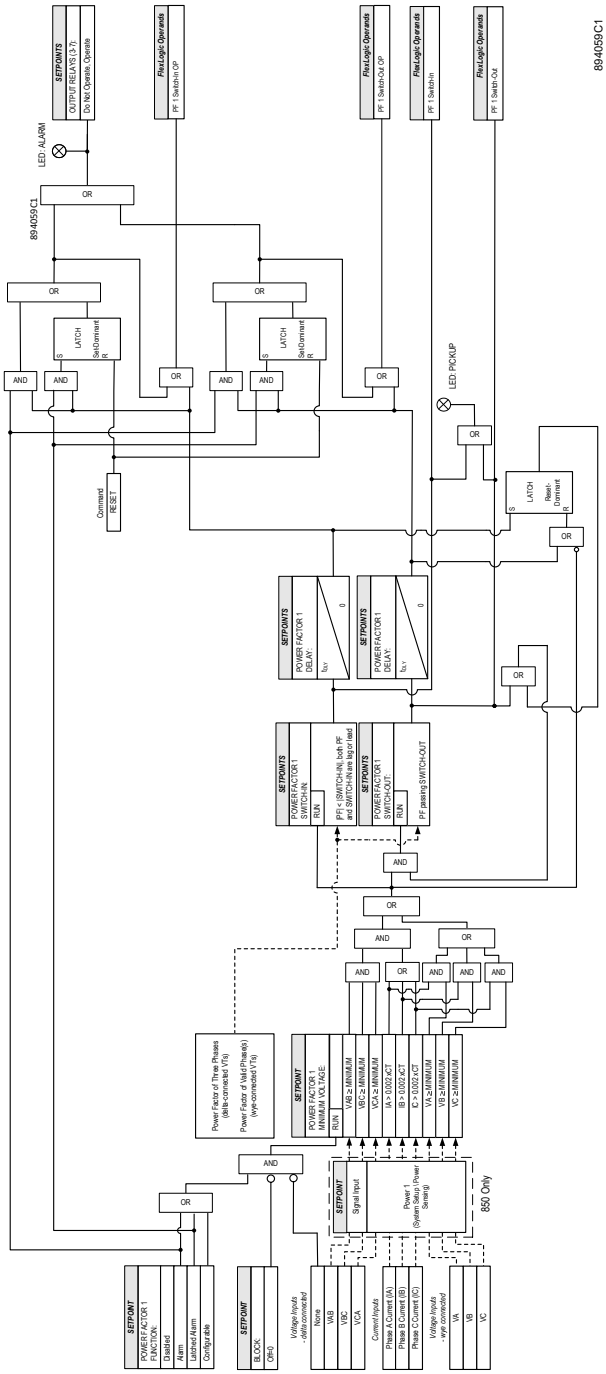

Figure 224: Power Factor logic diagram

10.4.2 DEMAND

Current Demand is measured on each phase, and on three phases for real, reactive, and apparent power. Setpoints allow emulation of some common electrical utility demand measuring techniques for statistical or control purposes.

> *Note:*
> *The relay is not approved as, or intended to be, a revenue metering instrument. If used in a peak load control system, the user must consider the accuracy rating and method of measurement employed, and the source VTs and CTs, in comparison with the electrical utility revenue metering system.*

The relay can be set to calculate Demand by any of three methods; Thermal Exponential, Block Interval, Rolling Demand.

Thermal Exponential

This selection emulates the action of an analog peak recording Thermal Demand meter. The relay measures the quantity (RMS current, real power, reactive power, or apparent power) on each phase every second, and assumes the circuit quantity remains at this value until updated by the next measurement. It calculates the Thermal Demand equivalent based on:

$$d(t) = D(1 - e^{-kt})$$

Where:

- d = demand value after applying input quantity for time t (in minutes)
- D = input quantity (constant)
- k = 2.3/thermal 90% response time.

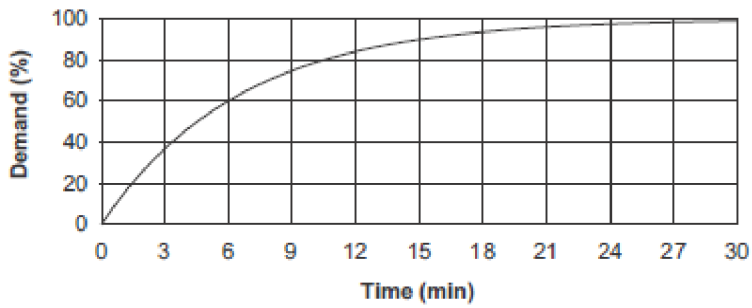

Figure 225: Thermal Demand Characteristic (15 min response)

The 90% thermal response time characteristic defaults to 15 minutes. A setpoint establishes the time to reach 90% of a steady-state value, just as with the response time of an analog instrument. A steady-state value applied for twice the response time will indicate 99% of the value.

Block Interval

This selection calculates a linear average of the quantity (RMS current, real power, reactive power, or apparent power) over the programmed Demand time interval, starting daily at 00:00:00 (i.e. 12 am). The 1440 minutes per day is divided into the number of blocks as set by the programmed time interval. Each new value of Demand becomes available at the end of each time interval.

Rolling Demand

This selection calculates a linear average of the quantity (RMS current, real power, reactive power, or apparent power) over the programmed Demand time interval, in the same way as Block Interval. The value is updated every minute and indicates the Demand over the time interval just proceeding the time of update.

10.4.2.1 CURRENT DEMAND

The Current Demand for each phase is calculated individually, and the Demand for each phase is monitored by comparison with a single Current Demand Pickup value. If the Current Demand Pickup is equaled or exceeded by any phase, the relay can cause an alarm or signal an output relay.

Path: ***Setpoints*** > ***Monitoring*** > ***Functions*** > ***Demand*** > ***Current Demand 1(X)***

FUNCTION

Range: Disabled, Alarm, Latched Alarm, Configurable

Default: Configurable

SIGNAL INPUT (not used in 859)

Range: dependent upon the order code

Default: CT Bank 1-J1

This setting provides the selection for the current input bank. The bank names can be changed in: ***Setpoints*** > ***System*** > ***Current Sensing*** > ***[Name]*** > ***CT Bank Name***.

MEASUREMENT TYPE

Range: Blk Interval, Exponential, Rolling Dmd

Default: Blk Interval

This setting sets the measurement method. Three methods can be applied.

THERMAL 90% RESPONSE TIME

Range: 5 min, 10 min, 15 min, 20 min, 30 min

Default: 15 min

This setpoint sets the time required for a steady state current to indicate 90% of the actual value to approximately match the response of the relay to analog instruments. The setpoint is visible only if ***MEASUREMENT TYPE*** is `Exponential`.

TIME INTERVAL

Range: 5 min, 10 min, 15 min, 20 min, 30 min

Default: 20 min

This setpoint sets the time period over which the current demand calculation is to be performed. The setpoint is visible only if ***MEASUREMENT TYPE*** is `Block Interval` or `Rolling Demand`.

PICKUP

Range: 10 to 10000 A in steps of 1 A

Default: 5000 A

This setpoint sets the Current Demand Pickup level.

OUTPUT RELAY X

Range: Do Not Operate, Operate

Default: Do Not Operate

BLOCK

Range: Off, Any FlexLogic operand

Default: Off

EVENTS

Range: Enabled, Disabled

Default: Disabled

TARGETS

Range: Disabled, Self-reset, Latched

Default: Disabled

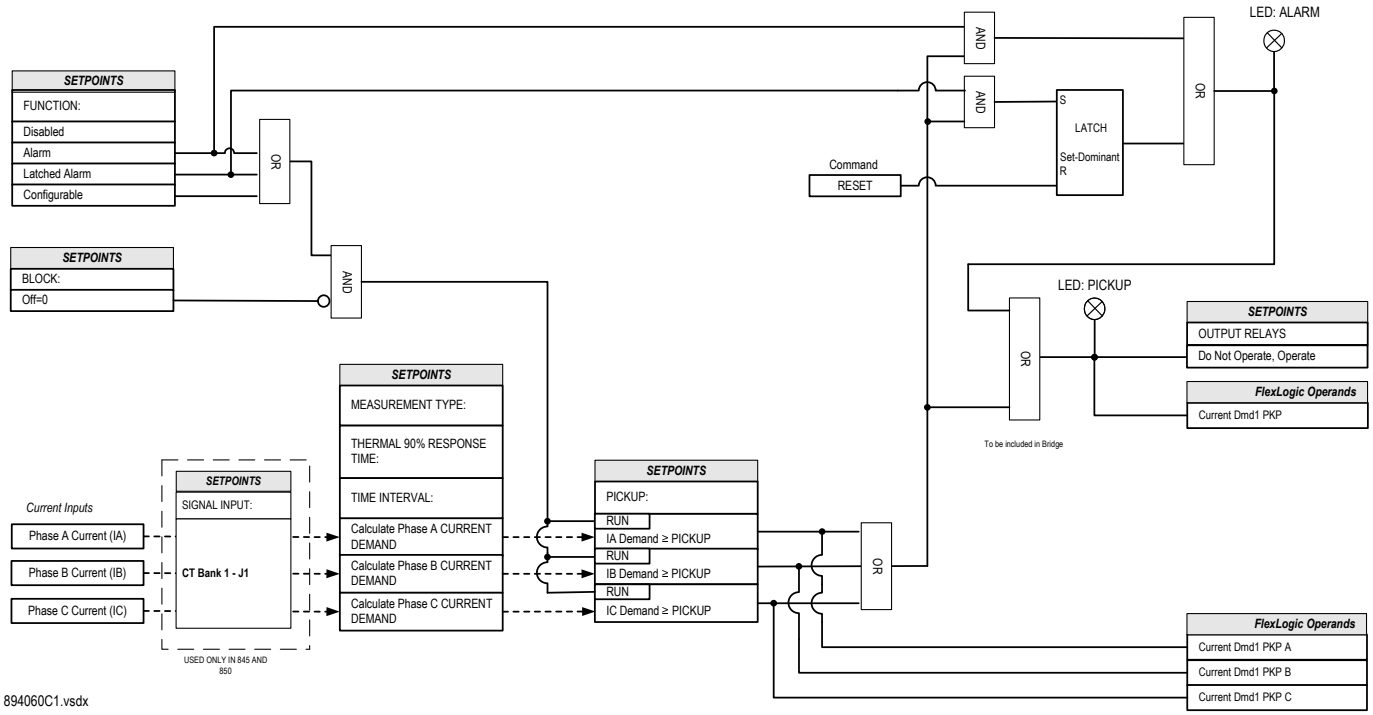

Figure 226: Current Demand logic diagram

10.4.2.2 REAL POWER DEMAND

The Real Power Demand is monitored by comparing it to a Pickup value. If the Real Power Demand Pickup is ever equaled or exceeded, the relay can be configured to cause an alarm or signal an output relay.

Path: ***Setpoints*** > ***Monitoring*** > ***Functions*** > ***Demand*** > ***Real Power Demand 1(X)***

FUNCTION

Range: Disabled, Alarm, Latched Alarm, Configurable

Default: Configurable

SIGNAL INPUT (not used in 859)

Range: Power x, (Dependent on order code)

Default: Power 1

MEASUREMENT TYPE

Range: Blk Interval, Exponential, Rolling Demand

Default: Blk Interval

This setting sets the measurement method. Three methods can be applied.

THERMAL 90% RESPONSE TIME

Range: 5 min, 10 min, 15 min, 20 min, 30 min

Default: 15 min

This setpoint sets the time required for steady-state Real Power to indicate 90% of the actual value to approximately match the response of the relay to analog instruments. The setpoint is visible only if ***MEASUREMENT TYPE*** is `Exponential`.

TIME INTERVAL

Range: 5 min, 10 min, 15 min, 20 min, 30 min

Default: 20 min

This setpoint sets the time period over which the Real Power Demand calculation is to be performed. The setpoint is visible only if ***MEASUREMENT TYPE*** is `Block Interval` or `Rolling Demand`.

PICKUP

Range: 0.1 to 300000.0 kW in steps of 0.1 kW

Default: 5000.0 kW

This setting sets the Real Power Demand Pickup level. The absolute value of real power demand is used for the Pickup comparison.

RESET DEMAND

Range: Off, Any FlexLogic operand

Default: Off

Any FlexLogic operand can be used to reset the minimum and maximum real power demand from the current value to zero. These values are reset to zero at the rising edge of the set operand. After reset to zero, calculation of minimum and maximum real power demand values continues until the next rising edge of the reset operand.

An application example is the monitoring of the minimum and maximum demand values per shift. A shift can be defined by the breaker status operand (open or closed) or operand derived from the ***Time of Day Timer*** element.

The Reset Demand operand does not reset the current value of the demand used by the ***Real Power Demand*** function.

OUTPUT RELAYS X

Range: Do Not Operate, Operate

Default: Do Not Operate

BLOCK

Range: Off, Any FlexLogic operand

Default: Off

EVENTS

Range: Enabled, Disabled

Default: Disabled

TARGETS

Range: Disabled, Self-reset, Latched

Default: Disabled

Logic Diagram

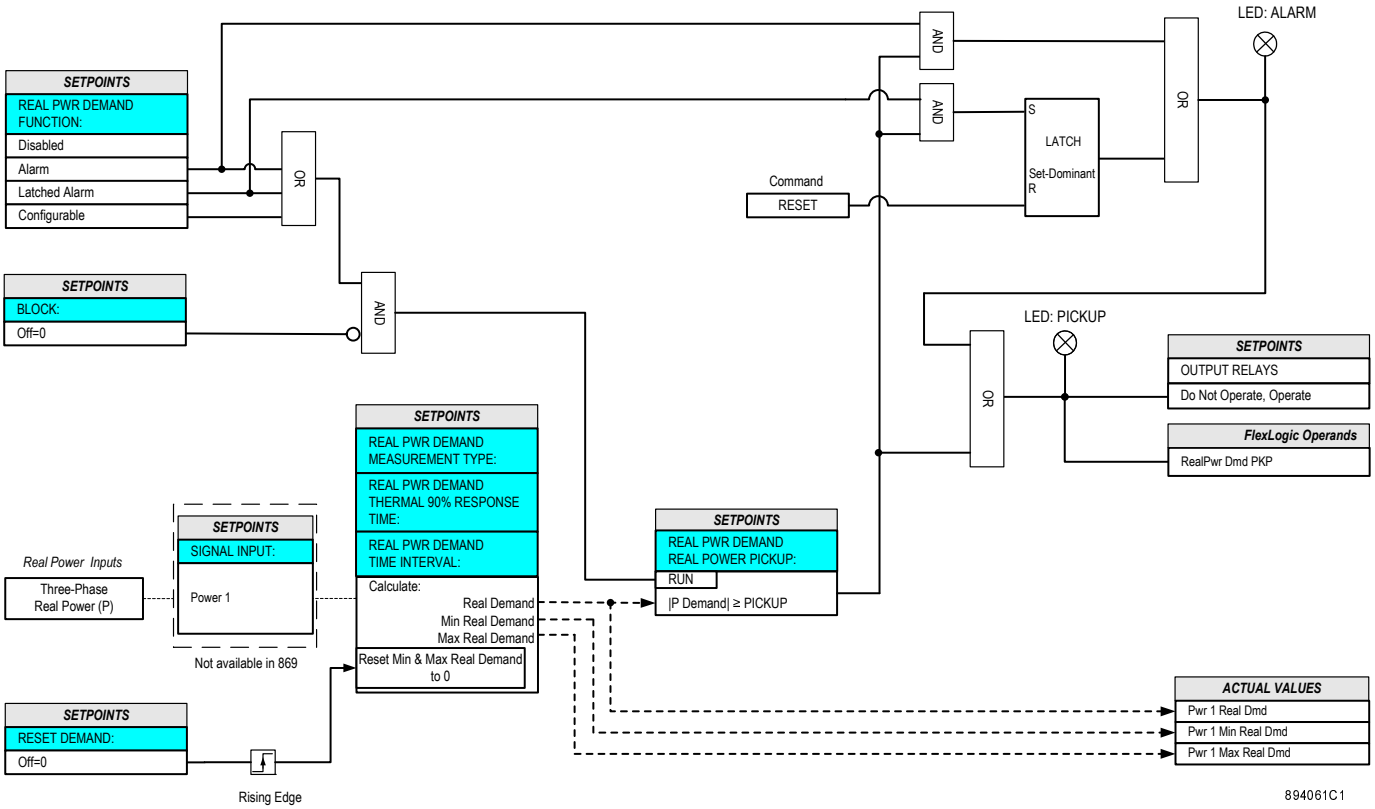

Figure 227: Real Power Demand logic diagram

10.4.2.3 REACTIVE POWER

he Reactive Power Demand is monitored by comparing to a Pickup value. If the Reactive Power Demand Pickup is ever equaled or exceeded, the relay can be configured to cause an alarm or signal an output relay.

Path: ***Setpoints*** > ***Monitoring*** > ***Functions*** > ***Demand*** > ***Reactive Power Demand 1(X)***

FUNCTION

Range: Disabled, Alarm, Latched Alarm, Configurable

Default: Configurable

SIGNAL INPUT (not used in 859)

Range: Power x (Dependent on order code)

Default: Power 1

MEASUREMENT TYPE

Range: Blk Interval, Exponential, Rolling Demand

Default: Blk Interval

The setting sets the measurement method. Three methods can be applied.

THERMAL 90% RESPONSE TIME

Range: 5 min, 10 min, 15 min, 20 min, 30 min

Default: 15 min

The setpoint sets the time required for a steady state Reactive Power to indicate 90% of the actual value to approximately match the response of the relay to analog instruments. The setpoint is visible only if ***MEASUREMENT TYPE*** is `Exponential`.

TIME INTERVAL

Range: 5 min, 10 min, 15 min, 20 min, 30 min

Default: 20 min

The setpoint sets the time period over which the Reactive Power Demand calculation is to be performed. The setpoint is visible only if ***MEASUREMENT TYPE*** is `Block Interval` or `Rolling Demand`.

PICKUP

Range: 0.1 to 300000.0 kvar in steps of 0.1 kvar.

Default: 5000.0 kvar

Any FlexLogic operand can be used to reset the accumulated reactive power demand from its current value to zero. The accumulated value resets at the rising edge of the set operand. After reset to zero, the reactive power demand element continues calculating the demand until the next rising edge of the reset operand.

RESET DEMAND

Range: Off, Any FlexLogic operand

Default: Off

Any FlexLogic operand can be used to reset the minimum and maximum reactive power demand from its current value to zero. The minimum and maximum values reset at the rising edge of the set operand. After reset to zero, calculation of minimum and maximum reactive power demand values continues until the next rising edge of the reset operand.

The Reset Demand operand doesn't reset the current value of the demand used by the Reactive Power Demand function.

OUTPUT RELAY X

Range: Do Not Operate, Operate

Default: Do Not Operate

BLOCK

Range: Off, Any FlexLogic operand

Default: Off

EVENTS

Range: Enabled, Disabled

Default: Disabled

TARGETS

Range: Disabled, Self-reset, Latched

Default: Disabled

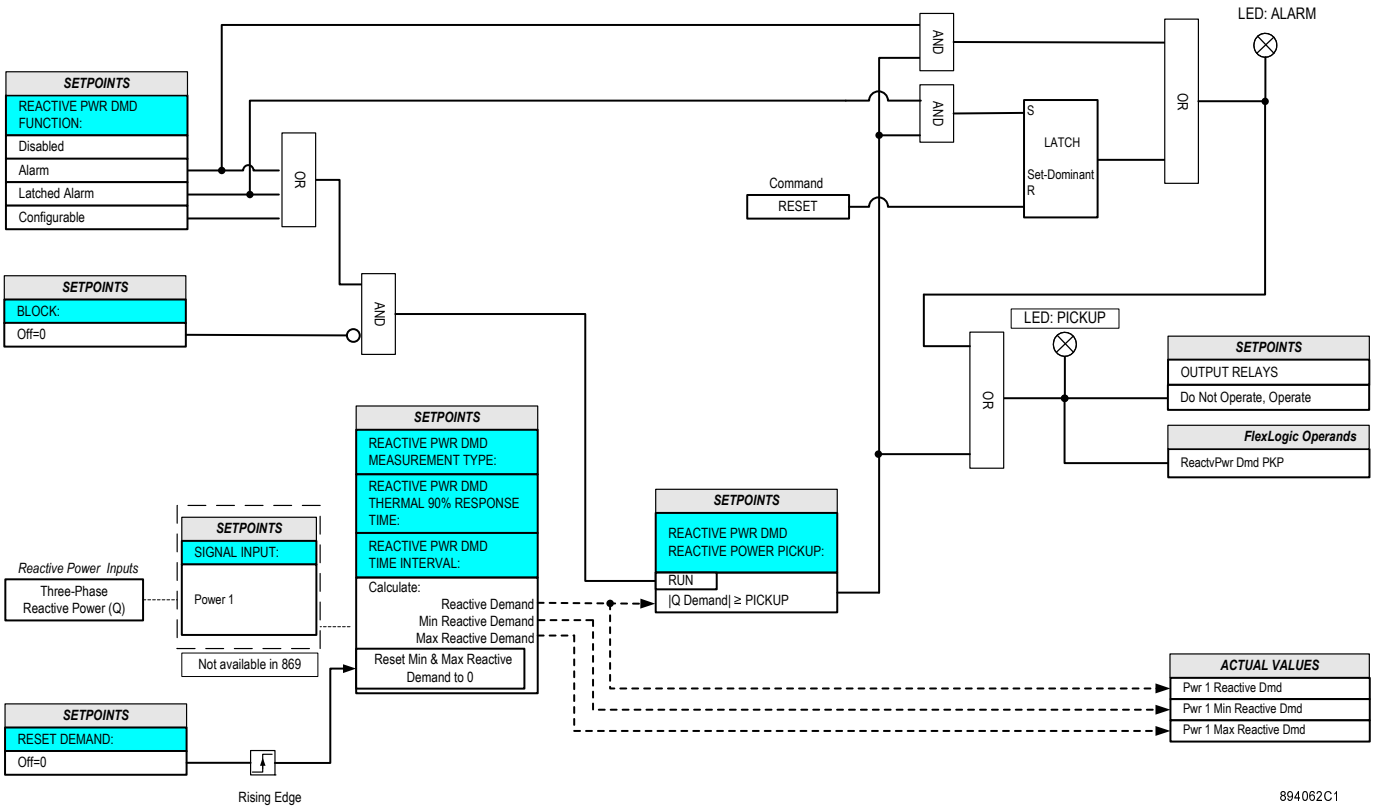

Figure 228: Reactive Power Demand logic diagram

10.4.2.4 APPARENT POWER DEMAND

The Apparent Power Demand is monitored by comparing to a Pickup value. If the Apparent Power Demand Pickup is ever equaled or exceeded, the relay can be configured to cause an alarm or signal an output relay.

Path: ***Setpoints*** > ***Monitoring*** > ***Functions*** > ***Demand*** > ***Apparent Power Demand 1(X)***

FUNCTION

Range: Disabled, Alarm, Latched Alarm, Configurable

Default: Configurable

SIGNAL INPUT (not used in 859)

Range: Power x (Dependent on order code)

Default: Power 1

MEASUREMENT TYPE

Range: Blk Interval, Exponential, Rolling Demand

Default: Blk Interval

The setting sets the measurement method. Three methods can be applied.

THERMAL 90% RESPONSE TIME

Range: 5 min, 10 min, 15 min, 20 min, 30 min

Default: 15 min

The setpoint sets the time required for a steady state Apparent Power to indicate 90% of the actual value to approximately match the response of the relay to analog instruments. The setpoint is visible only if ***MEASUREMENT TYPE*** is `Exponential`.

TIME INTERVAL

Range: 5 min, 10 min, 15 min, 20 min, 30 min

Default: 20 min

The setpoint sets the time period over which the Apparent Power Demand calculation is to be performed. The setpoint is visible only if ***MEASUREMENT TYPE*** is `Block Interval` or `Rolling Demand`.

PICKUP

Range: 0.1 to 300000.0 kVA in steps of 0.1 kVA

Default: 5000.0 kVA

The setting sets the Apparent Power Demand Pickup level.

RESET DEMAND

Range: Off, Any FlexLogic operand

Default: Off

Any FlexLogic operand can be used to reset the minimum and maximum apparent power demand from its current value to zero. The minimum and maximum values reset at the rising edge of the set operand. After reset to zero, calculation of minimum and maximum apparent power demand values continues until the next rising edge of the reset operand.

The Reset Demand operand doesn't reset the current value of the demand used by the Apparent Power Demand function.

OUTPUT RELAY X

Range: Do Not Operate, Operate

Default: Do Not Operate

BLOCK

Range: Off, Any FlexLogic operand

Default: Off

EVENTS

Range: Enabled, Disabled

Default: Disabled

TARGETS

Range: Disabled, Self-reset, Latched

Default: Disabled

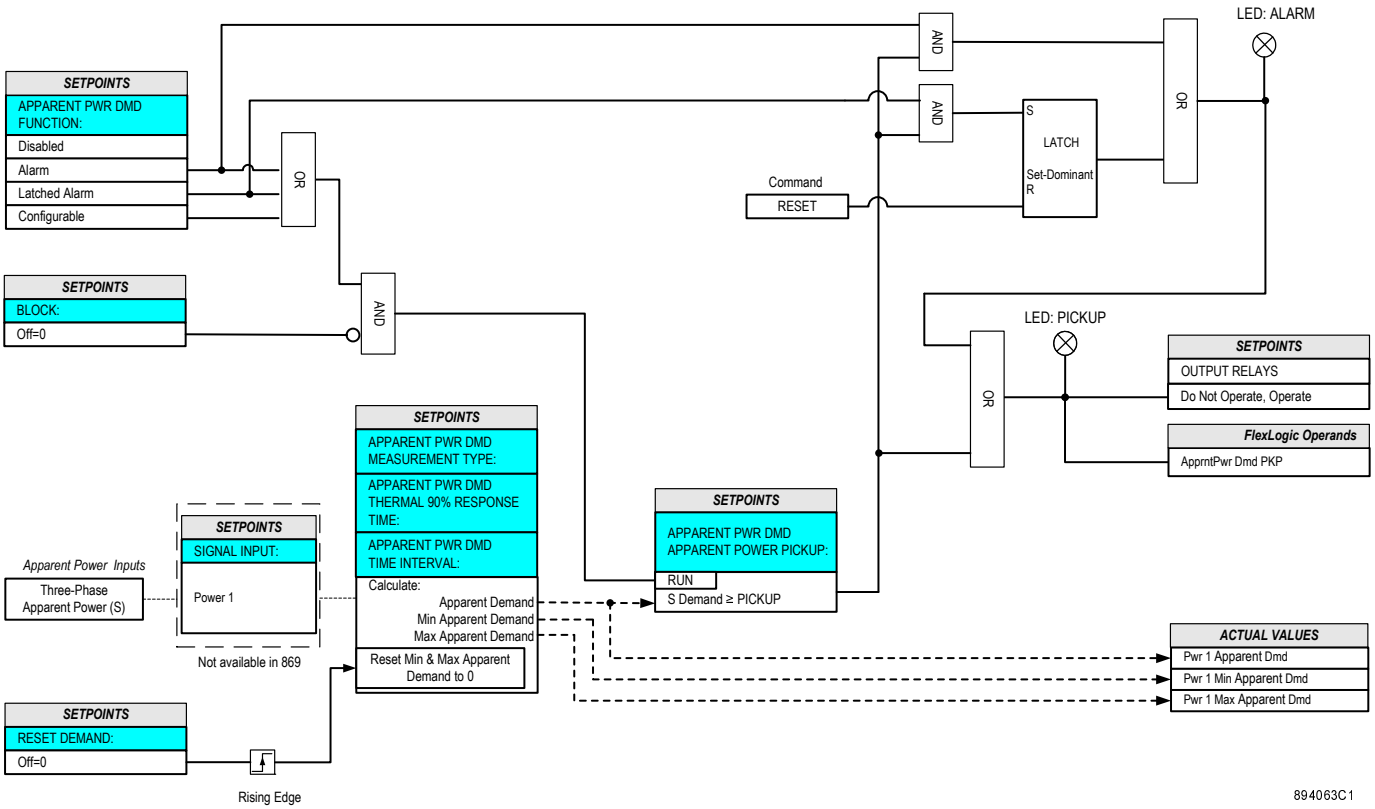

Figure 229: Apparent Power Demand logic diagram

10.4.3 PULSED OUTPUTS

The relay provides a Pulse Output element for four energy measurements. The Pulse Output element can operate auxiliary relays after an adjustable energy increment for the quantities of positive and negative MWh (Megawatt hours) and positive and negative MVARh (Mega Volt Amp Reactive hours).

Pulses occur at the end of each programmed energy increment. Upon power-up of the relay, the Pulse Output function, if enabled, continues from where it was at the time of loss of control power. For example, if control power is removed when the positive Watt hours stored at last pulse was 24.000 MWh, when control power is re-applied a pulse occurs at 34.000 MWh if the energy increment is set at 10.000 MWh.

1. The Auxiliary Output relay(s) used for this element must be set to `Self-Resetting`. The pulses consist of a one second on-time and a one second off-time. This feature is programmed such that no more than one pulse per two seconds is required.
2. The relay is not a revenue class meter and cannot be used for billing purposes.
3. Energy quantities are displayed in MWh and MVarh, with resolutions of 1 kWh and 1 kVarh respectively.

Path: ***Setpoints*** > ***Monitoring*** > ***Functions*** > ***Pulsed Outputs***

FUNCTION

Range: Disabled, Enabled

Default: Disabled

SIGNAL INPUT (not used in 859)

Range: Power x (Dependent on order code)

Default: Power 1

This setting provides the power element selection for the CT and VT bank identification.

POS WHS PULSE INCREMENT

Range: 0.000 to 1000.000 MWh in steps of 0.001 MWh

Default: 10.000 MWh

The setpoint specifies the positive Watthours threshold pulse increment after which the output pulse and output operand are set.

POS WHS PULSE RELAY X

Range: Do Not Operate, Operate

Default: Do Not Operate

NEG WHS PULSE INCREMENT

Range: 0.000 to 1000.000 MWh in steps of 0.001 MWh

Default: 10.000 MWh

The setpoint specifies the negative Watthours threshold pulse increment after which the output pulse and output operand are set.

NEG WHS PULSE RELAY X

Range: Do Not Operate, Operate

Default: Do Not Operate

POS VARHS PULSE INCREMENT

Range: 0.000 to 1000.000 MVARh in steps of 0.001 MVARh

Default: 10.000 MVARh

The setpoint specifies the positive VARhours threshold pulse increment after which the output pulse and output operand are set.

POS VARHS PULSE RELAY X

Range: Do Not Operate, Operate

Default: Do Not Operate

NEG VARHS PULSE INCREMENT

Range: 0.000 to 1000.000 MVARh in steps of 0.001 MVARh

Default: 10.000 MVARh

The setpoint specifies the positive VARhours threshold pulse increment after which the output pulse and output operand are set.

NEG VARHS PULSE RELAY X

Range: Do Not Operate, Operate

Default: Do Not Operate

EVENTS

Range: Disabled, Enabled

Default: Enabled

TARGETS

Range: Disabled, Self-reset, Latched

Default: Self-Reset

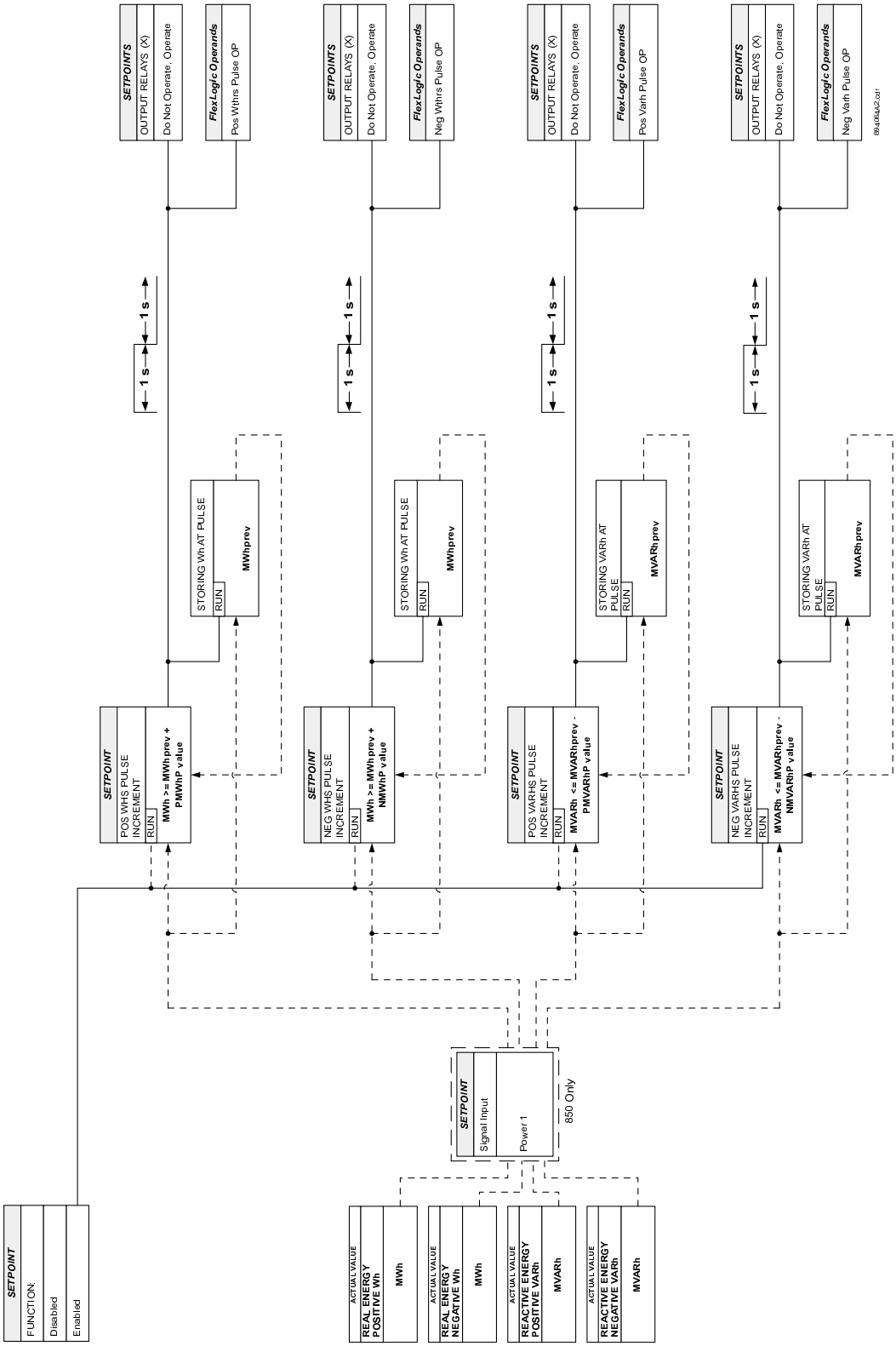

Figure 230: Pulsed Outputs logic diagram

10.4.4 DIGITAL COUNTERS

The relay provides sixteen identical Digital Counters. A Digital Counter counts the number of state transitions from logic 0 to logic 1.

The Digital Counters are numbered from 1 to 16. The counters are used to count operations such as the Pickups of an element, the changes of state of an external contact (e.g. breaker auxiliary switch), or the pulses from a watt-hour meter.

Path: ***Setpoints*** > ***Monitoring*** > ***Functions*** > ***Digital Counters*** > ***Digital Counter 1 (16)***

FUNCTION

Range: Disabled, Enabled

Default: Disabled

NAME

Range: Any 13 alphanumeric characters

Default: Counter 1

UNITS

Range: Any 5 alphanumeric characters

Default: Units

Assigns a label to identify the unit of measure with respect to the digital transitions to be counted. The units label will appear in the metering corresponding Actual Values Status under ***Records*** > ***Digital Counters***.

PRE-SET

Range: -2147483648, 0, +2147483647

Default: 0

The setpoint sets the count to a required pre-set value before counting operations begin, as in the case where a substitute relay is installed in place of an in-service relay, or while the Counter is running.

COMPARE

Range: -2147483648, 0, +2147483647

Default: 0

The setpoint sets the value to which the accumulated count value is compared. Three FlexLogic output operands are provided to indicate if the present value is ‘more than (HI)’, ‘equal to (EQL)’, or ‘less than (LO)’ the set value.

UP

Range: Off, Any FlexLogic operand

Default: Off

The setpoint selects the FlexLogic operand for incrementing the Counter. If an enabled UP input is received when the accumulated value is at the limit of +2147483647, the counter rolls over to -2147483648 and shows the alarm ‘Digital Counter 1 at Limit’.

DOWN

Range: Off, Any FlexLogic operand

Default: Off

The setpoint selects the FlexLogic operand for decrementing the Counter. If an enabled DOWN input is received when the accumulated value is at the limit of +2147483647, the counter rolls over to -2147483648 and shows the alarm 'Digital Counter 1 at Limit'.

SET TO PRE-SET

Range: Off, Any FlexLogic operand

Default: Off

The setpoint selects the FlexLogic operand used to set the counter to the pre-set value. The counter is set at pre-set value in the following situations:

When the Counter is enabled and Digital Counter 1 Set to Pre-Set operand has value 1 (when the Counter is enabled and Digital Counter 1 Set to Pre-Set operand has value 0, the Counter will be set to 0).

When the Counter is running and Digital Counter 1 Set to Pre-Set operand changes the state from 0 to 1 (Digital Counter 1 Set to Pre-Set changing from 1 to 0 while the Counter is running has no effect on the count).

When a reset or reset/freeze command is sent to the Counter and Digital Counter 1 Set to Pre-Set operand has the value 1 (when a reset or reset/freeze command is sent to the Counter and Digital Counter 1 Set to Pre-Set operand has the value 0, the Counter will be set to 0).

RESET

Range: Off, Any FlexLogic operand

Default: Off

The setpoint selects the FlexLogic operand for setting the count, either 0 or the pre-set value depending on the state of the Counter 1 Set to Pre-set operand.

FREEZE/RESET

Range: Off, Any FlexLogic operand

Default: Off

The setpoint selects the FlexLogic operand for freezing (capturing) the accumulating count value into a separate register with the associated date and time of the operation while resetting the count to either 0 or the pre-set value depending on the state of the Counter 1 Set to Pre-set operand.

FREEZE/COUNT

Range: Off, Any FlexLogic operand

Default: Off

The setpoint selects the FlexLogic operand for freezing (capturing) the accumulating count value into a separate register with the associated date and time of the operation while continuing counting. The present accumulated value and frozen (captured) value with the associated date/time stamp are available as STATUS values. If control power is interrupted, during the power-down operation, the accumulated and frozen (captured) values are saved into non-volatile memory.

HI OUTPUT RELAY X

Range: Do Not Operate, Operate

Default: Do Not Operate

EQL OUTPUT RELAY X

Range: Do Not Operate, Operate

Default: Do Not Operate

LO OUTPUT RELAY X

Range: Do Not Operate, Operate

Default: Do Not Operate

BLOCK

Range: Off, Any FlexLogic operand

Default: Off

EVENTS

Range: Disabled, Enabled

Default: Enabled

> *Note:*
> *The counter accumulated value can be reset to zero either by asserting an operand programmed under Reset from the counter menu, executing the clear Digital Counters command under the Records/Clear menu, or by setting the function of the counter to "Disabled".*

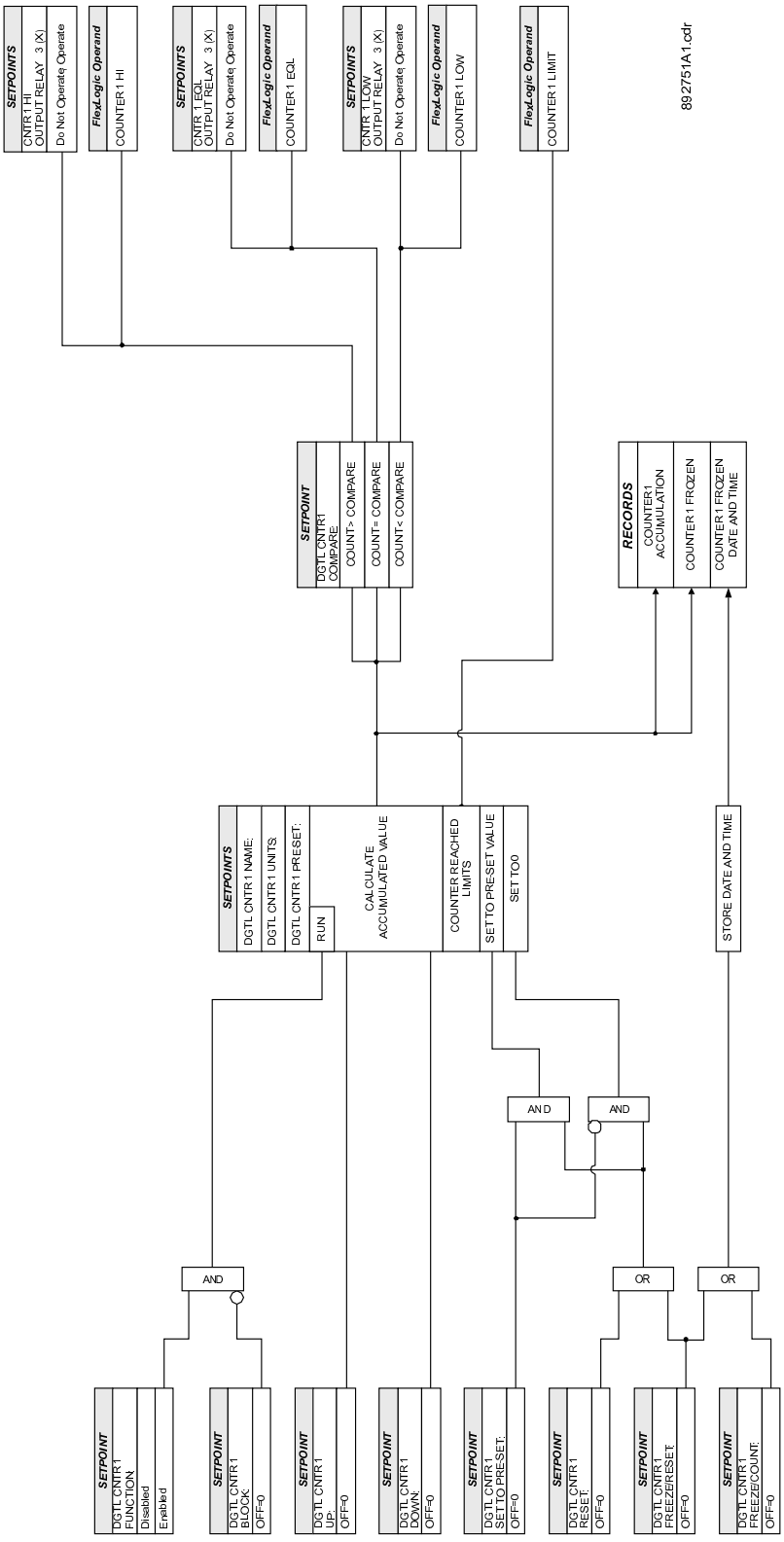

Figure 231: Digital Counter logic diagram

10.4.5 TIME OF DAY TIMER

The Time of Day Timer function provides the user with the ability to program control actions based on real time. There are two identical Time of Day Timers, numbered 1 and 2, each with an independent start and stop time

setting. Each timer is on when the relay real-time clock/calendar value is later than the timer Start Time 1, and earlier than the timer Stop Time. FlexLogic Operand Time of Day 1 On follows the state of the timers. In addition, 1.0 second pulses are generated on FlexLogic Operands Time of Day 1 Start to Time of Day 3 Start and Time of Day 1 Stop when the timers turn on and off respectively, as shown in the following figure.

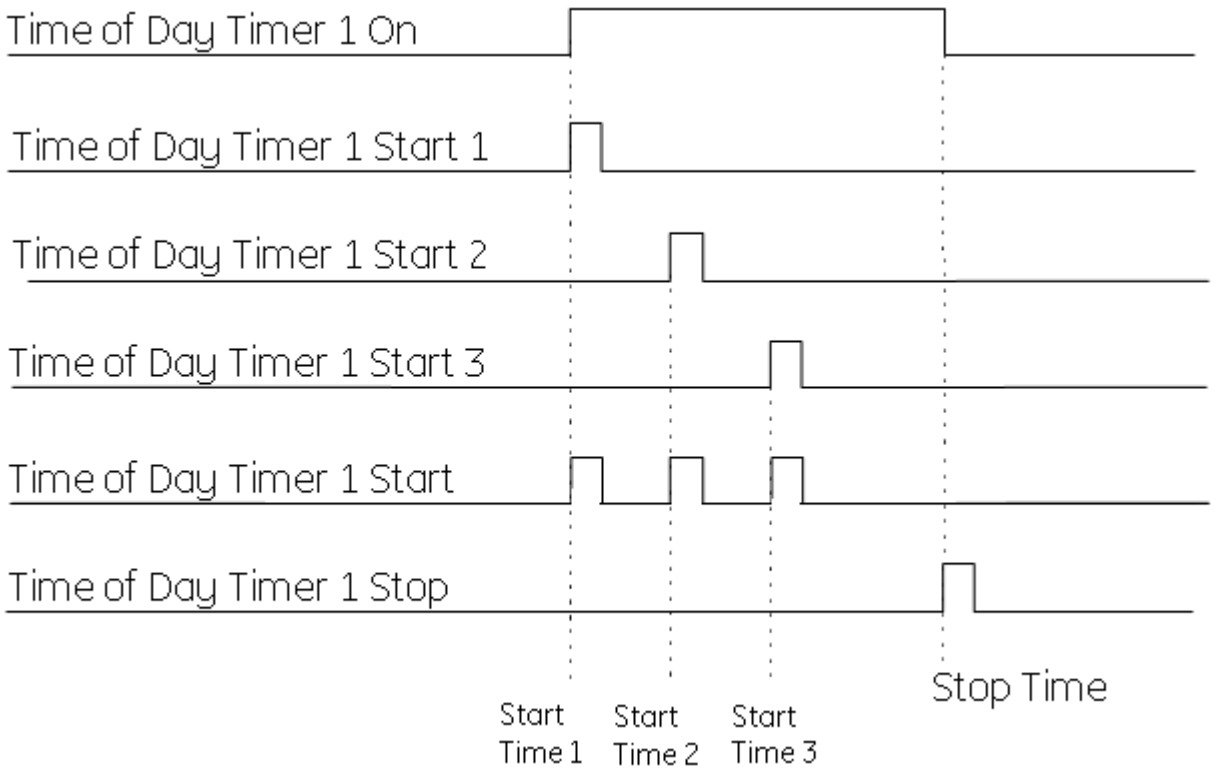

Figure 232: Five operands per timer allow flexible close/open/maintain control

If the relay is connected to an external clock that follows daylight time changes, care should be taken that the changes do not result in undesired operation. The timers wrap around 24h.

Path: ***Setpoints*** > ***Monitoring*** > ***Functions*** > ***Time of Day Timers*** > ***Time of Day Timer 1(X)***

FUNCTION

Range: Disabled, Enabled

Default: Disabled

START TIME 1

Range: 00:00 to 23:59 in steps of 1 min

Default: 00:00

This setting is used to set the relay clock/calendar value at which the timer turns on. When the relay clock/calendar is equal to the value set here, FlexLogic operands Time of Day 1(2) ON and Time of Day 1(2) Start 1 are asserted.

START TIME 2

Range: 00:00 to 23:59 in steps of 1 min

Default: 00:00

This setting is used to set the relay clock/calendar value at which the timer turns on. When the relay clock/calendar is equal to the value set here, FlexLogic operand Time of Day 1(2) Start 2 is asserted.

START TIME 3

Range: 00:00 to 23:59 in steps of 1 min

Default: 00:00

This setting is used to set the relay clock/calendar value at which the timer turns on. When the relay clock/calendar is equal to the value set here, FlexLogic operand Time of Day 1(2) Start 3 is asserted.

STOP TIME

Range: 00:00 to 23:59 in steps of 1 min

Default: 00:00

This setting is used to set the relay clock/calendar value at which the timer turns off. When the relay clock/calendar is equal to the value set here, FlexLogic operand Time of Day 1(2) Stop is asserted.

BLOCK

Range: Off, Any FlexLogic operand

Default: Off

EVENTS

Range: Disabled, Enabled

Default: Enabled

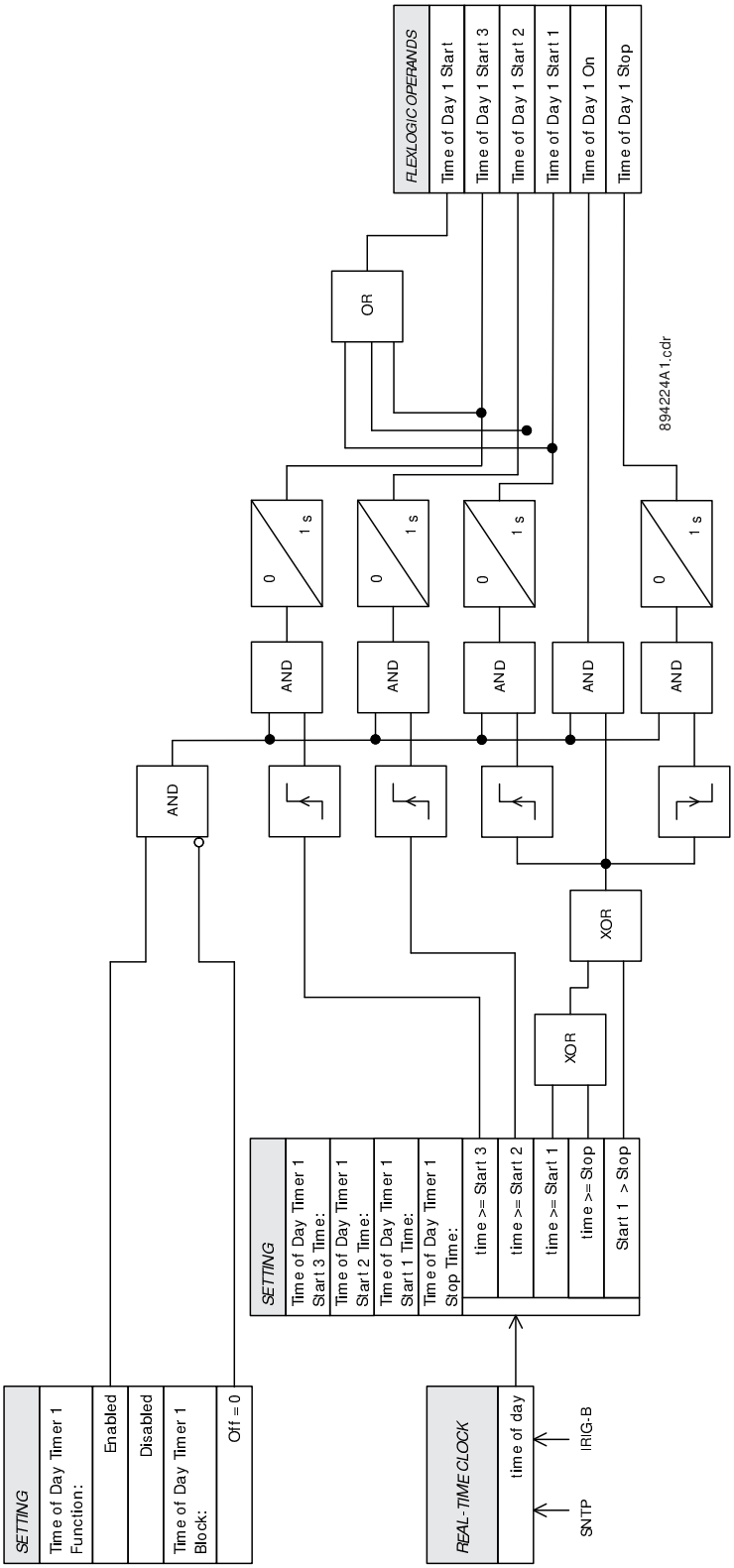

Figure 233: Time of Day Timer logic diagram

10.5 HARMONIC DETECTION

The Harmonic detection 1(6) element monitors the selected 2nd to 5th harmonic or Total Harmonics Distortion (THD), which is present in the phase currents. The relay provides six identical Harmonic Detection elements.

In a distribution network, harmonic detection can be used to monitor spurious harmonics from inverter based distributed energy resources, and take control actions such as islanding DERs or turning on harmonic filters. During transformer energization or motor starts, the inrush current present in phase currents can impact some sensitive elements, such as negative sequence overcurrent. Therefore, the ratio of the second harmonic to the fundamental magnitude per phase is monitored, while exceeding the settable pickup level, an operand is asserted, which can be used to block such sensitive elements.

During startup or shutdown of generator connected transformers, or following a load rejection, the transformer can experience an excessive ratio of volts to hertz, that is, become overexcited. Similarly, the ratio of the fifth harmonic to the fundamental magnitude can be monitored to detect the overexcitation condition.

Note:
The harmonics monitored in this element is calculated from the phase currents, unlike the second or fifth harmonic differential current used in the transformer differential element.

Note:
The harmonics are updated every protection pass. The THD is updated every three cycles, which is not recommended as a blocking signal.

Path: ***Setpoints*** > ***Monitoring*** > ***Harmonic Detection*** > ***Harmonic Detection 1(X)***

FUNCTION

Range: Disabled, Alarm, Latched Alarm, Configurable

Default: Disabled

SIGNAL INPUT (not used in 859)

Range: dependent upon the order code

Default: CT Bank 1–J1

HARMONIC

Range: 2nd, 3rd, 4th, 5th, THD

Default: 2nd

This setting selects the specified harmonic or THD to be monitored. The harmonic or THD is expressed in percent relative to the fundamental magnitude.

PICKUP

Range: 0.1 to 100.0% in steps of 0.1%

Default: 20.0%

PICKUP DELAY

Range: 0.000 to 60000.000 s in steps of 0.001 s

Default: 0.000 s

PHASES FOR OPERATION

Range: Any One, Any Two, All Three, Average

Default: Any One

This setting defines the phases required for operation, and the detail is explained below:

- ANY ONE: At least one phase picked up.
- ANY TWO: Two or more phases picked up.
- ANY THREE: All three phases picked up.
- AVERAGE: The average of three-phase harmonics or THDs picked up.

If set to `Average`, the relay calculates the average level of the selected harmonic and compares this level against the pickup setting. Averaging of the selected harmonic follows an adaptive algorithm depending on the fundamental current magnitude per-phase. If the fundamental magnitude on any of the three phases goes below the current cut-off level, the selected harmonic current from that phase is dropped (zeroed) from the equation for averaging, and the divider is decreased from 3 to 2. The same happens if the magnitude of the fundamental magnitude on one of remaining two phases drops below the cut-off level. In this case the selected harmonic on this phase is dropped from summation, and the divider is decreased to 1.

MIN OPER CURRENT

Range: 0.03 to 1.00 x CT in steps of 0.01

Default: 0.10 x CT

This setting sets the minimum value of current required to allow the Harmonic Detection element to operate.

If ***PHASES FROM OPERATION*** is set to `Average`, the average of three-phase currents is used for supervision. A similar adaptive average algorithm is applied to calculate the average of operation current magnitude.

OUTPUT RELAY X

Range: Do Not Operate, Operate

Default: Do Not Operate

EVENTS

Range: Disabled, Enabled

Default: Enabled

TARGETS

Range: Self-reset, Latched, Disabled

Default: Self-reset

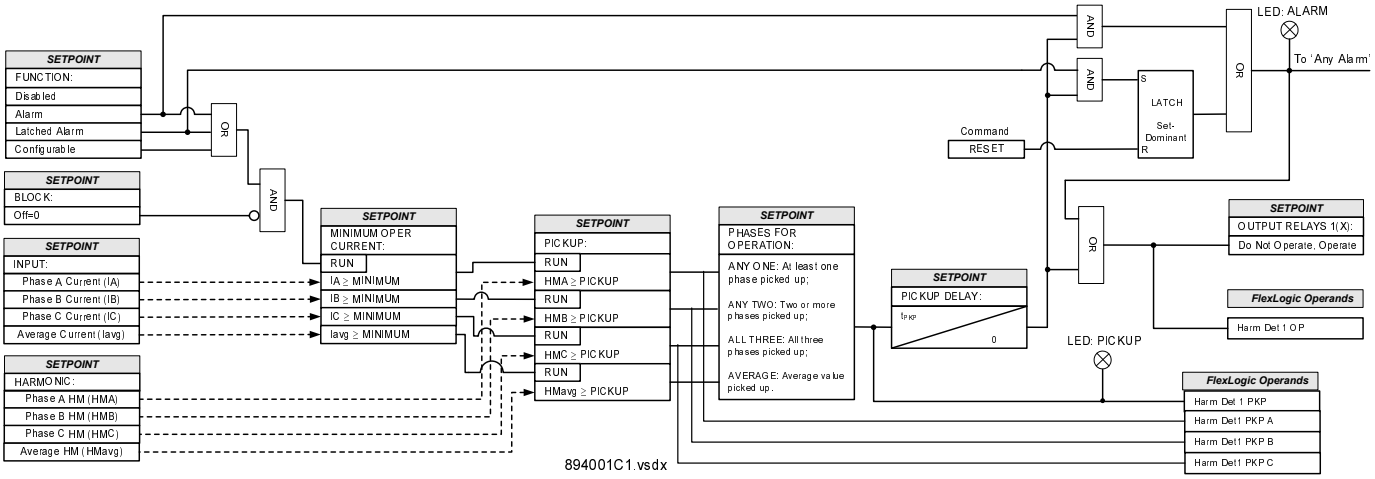

Figure 234: Harmonic Detection logic diagram

10.6 POWER QUALITY/VOLTAGE DISTURBANCE

The Voltage disturbance function includes both Voltage Swell and Voltage Sag.

Voltage Sag, as described in IEEE 1159-2009 : IEEE Recommended Practice for Monitoring Electric Power Quality, is a fall in RMS voltage between 0.1 pu and 0.9 pu for durations from 0.5 cycles to 1 min. The condition ends when the level increases to at least 10% of the nominal voltage above the ***SAG LEVEL*** setting. When the voltage on any phase drops below this level a voltage sag condition occurs. Voltage sags are usually associated with system faults but can also be caused by switching heavy loads or starting large motors. Short duration voltage sag may cause process disruptions

Voltage Swell, as described in IEEE 1159-2009, Voltage swell is an increase in RMS voltage above 1.1 pu for durations from 0.5 cycle to 1 min. To end a Swell condition the level must decrease to 10% of the nominal voltage bellow the ***SWELL LEVEL*** setting. Voltage swells are usually associated with system fault conditions, but they are much less common than voltage sags. An SLG fault on the system can cause a swell to occur, resulting in a temporary voltage rise on the healthy phases. Swells can also be caused by switching off a large load, load shedding, or switching on a large capacitor bank. Voltage swell may cause failure of the components depending upon the magnitude and frequency of occurrence.

The following reference table represents the different categories of Voltage Sag/Swell conditions based on duration and pickup level.

Short duration root-mean-square (RMS)	Duration	Level
Instantaneous		
Sag	0.5 - 30 cycles	0.1 - 0.9 pu
Swell	0.5 - 30 cycles	1.1 - 1.8 pu
Momentary		
Sag	30 cycles - 3 s	0.1 - 0.9 pu
Swell	30 cycles - 3 s	1.1 - 1.4 pu
Interruption	0.5 cycles - 3 s	< 0.1 pu
Temporary		
Sag	>3 s - 1 min	0.1 - 0.9 pu
Swell	>3 s - 1 min	1.1 - 1.2 pu
Interruption	>3 s - 1 min	< 0.1 pu

Path: ***Setpoints*** > ***Monitoring*** > ***Power Quality*** > ***Voltage Disturbance1(X)***

FUNCTION

Range: Disabled, Alarm, Latched Alarm, Configurable

Default: Disabled

SIGNAL INPUT (not used in 859)

Range: dependent upon the order code

Default: Ph VT Bank 1–J2

MODE

Range: Phase to Ground, Phase to Phase

Default: Phase to Ground

This setting provides selection of Phase to ground and Phase to phase voltages for a Wye VT connection (phase to phase for delta connected VT connection).

Note:
Only Phase to Phase mode should be selected when Delta/Single VT Connection Type and Pseudo Reference Phase-to-Phase are programmed for Phase VT connection under System/Voltage Sensing.

VOLT SWELL PICKUP

Range: 0.02 to 3.00 x VT in steps of 0.01 x VT

Default: 1.20 x VT

This setting defines the voltage swell pickup level for phase (A, B, C), and is usually set to a level 1.1 to 1.8 times the VT / nominal voltage.

VOLT SWELL DELAY

Range: 0.000 to 6000.000 s in steps of 0.001 s

Default: 5.000 s

This setting specifies an operation time delay for the voltage swell function. Short duration (less than 1 min) or long duration (more than 1 min) swell overvoltage conditions can be differentiated by setting this delay appropriately.

MIN VOLT SUPV

Range: 0.02 to 3.00 x VT in steps of 0.01 x VT

Default: 1.20 x VT

This setting defines the minimum feeder voltage level required to identify the voltage sag condition. This will help to discriminate the voltage sag condition from the feeder down condition.

VOLT SAG PICKUP

Range: 0.02 to 3.00 x VT in steps of 0.01 x VT

Default: 1.20 x VT

This setting defines the voltage sag pickup level, and it is usually set to a level between 0.1 to 0.9 times the VT / nominal voltage.

Note:
*This setting must be higher then value set under **MIN VOLT SUPV**.*

VOLT SAG DELAY

Range: 0.000 to 6000.000 s in steps of 0.001 s

Default: 5.000 s

This setting specifies an operation time delay for the voltage sag function. Short duration (less than 1 min) or long duration (more than 1 min) sag undervoltage conditions can be differentiated by setting this delay appropriately.

VOLT SAG ALARM RESET

Range: 0.000 to 6000.000 s in steps of 0.001 s

Default: 5.000 s

This setting specifies duration for the Volt Sag operation alarm. After this alarm reset time, the sag operation alarm is reset until the next sag event. This setting avoids an undesired continuous alarm in case the upstream power source is turned off.

OUTPUT RELAY X

Rage: Do Not Operate, Operate

Default: Do Not Operate

BLOCK

Range: Off, Any FlexLogic operand

Default: Off

EVENTS

Range: Disabled, Enabled

Default: Enabled

TARGETS

Range: Self-reset, Latched, Disabled

Default: Self-reset

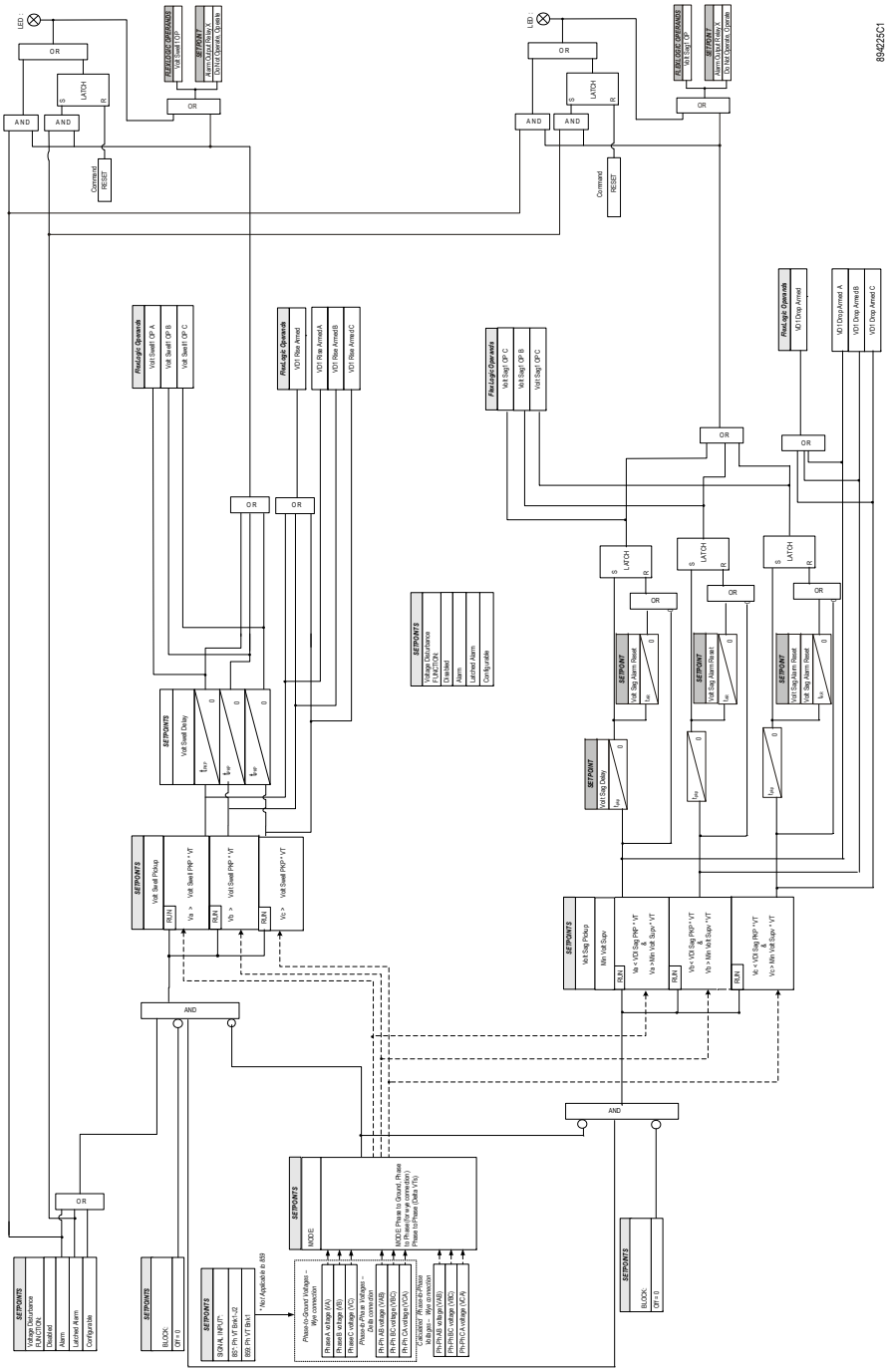

Figure 235: Voltage Disturbance 1 logic diagram

10.6.1 VOLTAGE INTERRUPTION

The relay provides one Voltage Interruption monitoring element. This element may be used for detecting voltage interruptions with the help of positive sequence voltage.

The setting of this function is applied to the positive sequence voltage. When the measured voltage is below the threshold, a pickup flag is asserted. When it exceeds the dropout level, flag is de-asserted. The element also calculates number of voltage interruptions and total time of voltage interrupted. The relay stores the number of voltage interruptions and total interruption time for any given instance. Whenever the positive sequence voltage goes below the threshold, the values of the interruption counter and the total time counter starts are incremented.

The function displays the number of voltage interruptions and total time of voltage interrupted for the selected period. The periods can be selected as hours, day, week, month or year as follows:

- 8 hours: 00:00 - 08:00, 08:00 - 16:00, 16:00 - 24:00
- one day: 00:00 - 24:00
- one week: Monday 00:00 - Sunday 24:00
- one month: the first day 00:00 - the last day 24:00
- one year: 1st January 00:00 - 31st December 24:00

FUNCTION

Range: Disabled, Enabled

Default: Disabled

SIGNAL INPUT (not used in 859)

Range: Ph VT Bnk1-J2, Ph VT Bnk2-K2, LEA Bnk1-J2, LEA Bnk2-J2

Default: LEA Bnk1-J2

This setting provides selection of the voltage signal input.

VOLTAGE PICKUP

Range: 0.00 to 1.50 x VT in steps of 0.01 x VT

Default: 0.70 x VT

This setting sets the pick-up threshold for the positive sequence under voltage element.

MINIMUM VOLTAGE

Range: 0.00 to 1.50 x VT in steps of 0.01 x VT

Default: 0.20 x VT

This setting sets the minimum operating voltage for positive sequence under voltage pickup level specified per times VT.

PERIOD

Range: 8 hours, 1 day, 1 week, 1 month, 1 year

Default: 1 month

The periods can be selected as hours, day, week, month or year.

BLOCK

Range: Off, any FlexLogic Operand

Default: Off

The Voltage Interruption will be blocked, when the selected operand is asserted.

Logic diagram

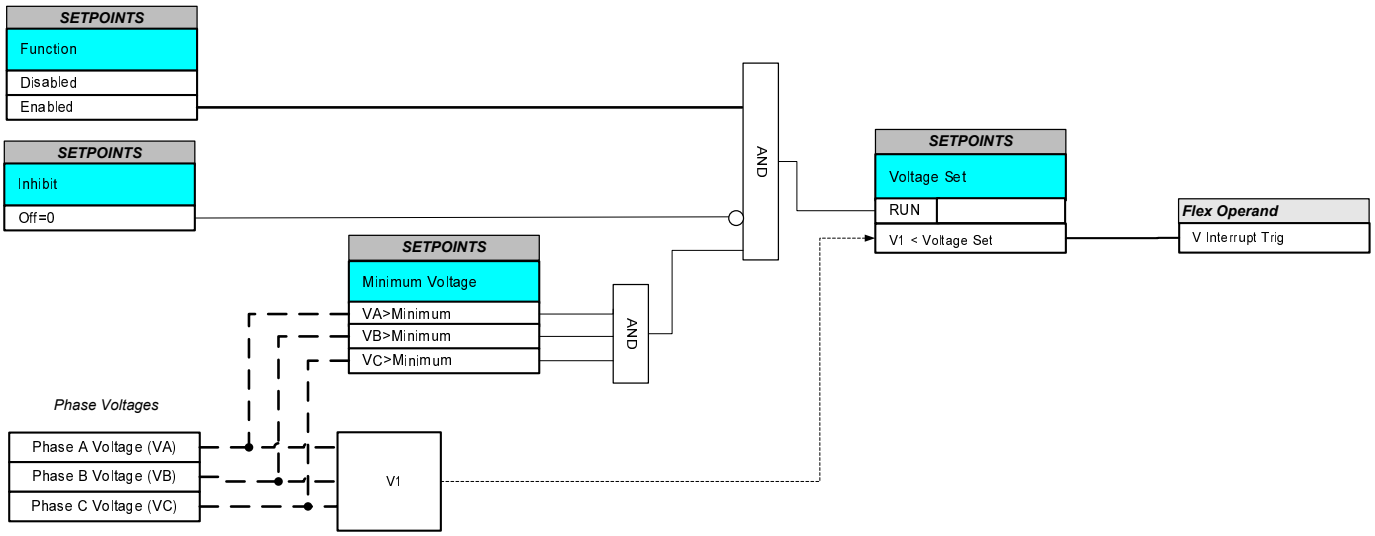

Figure 236: Voltage Interruption logic diagram

10.7 TRANSIENT GROUND FAULT DETECTION

Some distribution systems run completely insulated from earth. Such systems are called unearthed systems. The advantage of an unearthed system is that a single phase to earth fault does not cause an earth fault current to flow. This means the whole system remains operational and the supply is not interrupted. The system must be designed to withstand high transient and steady state over voltages, however, and so its use is generally restricted to low and medium voltage distribution systems.

When there is an earth fault in an unearthed 3-phase system, the voltage of the faulted phase is reduced to the earth potential. This causes the phase voltage in the other two phases to increase, which causes a significant charging current between the phase-to-earth capacitances. This can cause arcing at the fault location. Many systems use a Petersen coil to compensate for this, thus eliminating the arcing problem. Such systems are called compensated networks. The network is earthed with an inductive reactor, where its reactance is made nominally equal to the total system capacitance to earth. Under this condition, a single-phase earth fault does not result in any steady state earth fault current.

The introduction of a Petersen coil introduces major difficulties when it comes to determining the direction of the fault. This is because the faulted line current is the sum of the inductive current introduced by the Petersen coil and the capacitive current of the line, which are in anti-phase with each other. If they are equal in magnitude, the current in the faulted line is zero. If the inductive current is larger than capacitance current, the direction of the faulted line current will appear to be in the same direction as that of the healthy line.

Standard directionalizing techniques used by conventional feeder protection devices are not adequate for this scenario, therefore, we need a different method for determining the direction of the fault. Two commonly used methods are the First Half Wave method and the Residual Active Power method.

First Half Wave Method

The initial transient wave, generated at the fault point travels towards the bus along the faulted line, until it reaches the healthy line. For forward faults the high frequency fault voltage and current components are in opposite directions during the first half wave, whereas for reverse faults, they are in phase. This fact can be used to determine the fault direction. This method, however, is subject to the following disadvantages:

- The time duration of the characteristic is very short, in most cases not more than 3ms. Because of this, it requires a high sampling frequency (3000Hz or even higher)
- It requires an analogue high pass filter, necessitating special hardware
- It is affected by the fault inception angle. For example, when the fault inception angle is 0°, there are no initial travelling waves.

Residual Active Power Method

Residual Active power, which is sometimes used to detect the instance of a fault can also in some cases be used for detecting the fault direction. Although the capacitive currents can be compensated by an inductive current generated by a Petersen coil, the active (instantaneous) current can never be compensated for and this is still opposite to that of the healthy line. This fact can also be used to directionalise the fault.

For a forward directional fault, the zero-sequence active power is the power loss of Petersen's coil, which is negative. For a reverse fault, the zero-sequence active power is the power loss of the transmission line, which is positive. This method, however, is subject to the following disadvantages:

- The zero-sequence active power will be very small in magnitude for a reverse directional fault. Its value depends on the power loss of transmission line.
- The zero-sequence active power may be too small in magnitude to be detected for a forward directional fault. Its value depends on the power loss of Petersen coil.
- High resolution CTs are required

Due to the low magnitude of measured values, reliability is compromised. This product does not use the above techniques for directionalisation. This product uses an innovative patented technique called Transient Reactive Power method to determine the fault direction of an earth fault in a compensated network.

Transient Ground Fault Detection (TGFD) in this device comprises three modules:

- Transient Ground Fault Detection module (TGF)
- Fault Type Detector (FTD)
- Direction Detector (DD)

> *Note:*
> *Note: TGF is implemented for 50Hz only.*

TRANSIENT GROUND FAULT DETECTOR

To establish if there is an earth fault on the system somewhere is straightforward. A simple residual overvoltage comparison can determine this. Therefore, a TGF[X]> Start signal is produced by comparing the neutral voltage with a threshold voltage set by ***VN Threshold***. The difficulty comes with establishing the type of fault and its direction.

FAULT TYPE DETECTOR

The FTD uses a Fundamental analysis (FA) technique to establish whether the fault is an intermittent fault or a steady state faults. For Transient Earth Fault Detection, the detector counts the Residual Voltage bursts within a specified time window. With some clever signal processing the detector module creates pulses by comparing the bursts with a settable threshold, then counts these pulses. If the number of pulses equals or exceeds the number specified by the ***FTD> Fault Count*** setting, within the time window specified by the ***FTD> Time Window***, the fault is deemed to be intermittent and the TGF[X]> Intermit Operand is asserted. If there are fewer pulses than this number, this indicates either a disturbance or a permanent fault. To establish which, we need to look at the RMS value of the residual voltage.

If there are fewer pulses than specified and the RMS value does not drop below setting within the specified time window, the fault is deemed to be permanent. In this case the TGF[X]> Steady Operand is asserted. If there are fewer pulses than specified and the RMS value does drop below setting, this indicates that a disturbance has been detected but it is not a fault. In this case, the TGF[X]> Steady Operand is not asserted.

The inputs to this module are:

- The residual voltage
- ***FTD> VN*** (defines the threshold which converts the residual voltage burst into a pulse
- ***FTD>*** Time Window (defines the time window - default is 2 seconds)
- ***FTD>*** Fault Count (defines the fault count)

The FTD outputs two signals to indicate whether the fault is steady state or intermittent.

DIRECTION DETECTOR

The Direction Detector (DD) uses a patented technique based on Transient Reactive Power (TRP) to establish the direction of the fault. Unlike traditional methods, this TRP method does not require high resolution CTs or special analogue filtering hardware and is therefore cheaper to implement.

It can be shown that the residual voltage and residual current components can be reliably used as discriminative criteria between a faulty and healthy feeder at 220Hz.

The admittance response of a healthy distributed feeder is shown below using a Pi model:

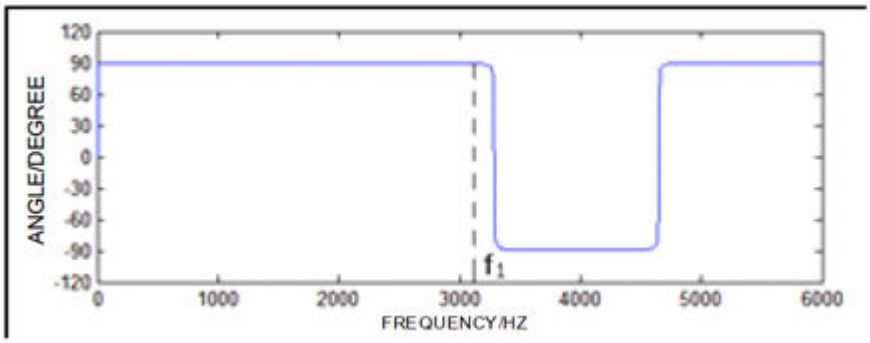

Figure 237: Healthy line response

In the above figure, the phase response of the admittance is consistent at 90o up to frequency f1 (approximately 3000Hz). For a compensated faulty feeder, the admittance response is shown below using a Pi model.

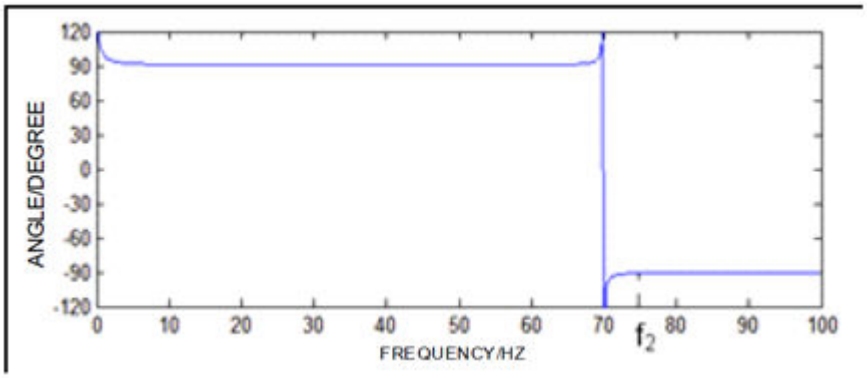

Figure 238: Faulty line response

We can observe that the phase angle (and thus, the reactive power flow) changes from 90° to -90° at frequencies higher than f2. Based on the above, we have clear direction discrimination between a healthy and faulted feeder at any frequency between f2 and f1 approximately.

> *Note:*
> *The resonant frequency in the above system is 70Hz. For a perfectly compensated system, this will be 50Hz.*

IED's use an anti-aliasing band pass filter with cut-off frequency of 150Hz. Furthermore, at 220Hz the post-filter magnitude is approximately 0.5pu, and at 330Hz, it is less than 0.2pu. To avoid any integer harmonics, and to avoid severely attenuated quantities due to the filter, we have chosen 220Hz as the most suitable frequency for direction determination.

In the forward direction, the residual voltage leads the residual current by 90°, and in the reverse direction the residual voltage lags the residual current by 90°. These criteria can be used to directionalise the fault.

The residual voltage (Vres) after passing through the bandpass filter tuned to 220 Hz, has 90° added to its phase.

The residual current (Ires) is also passed through a 220 Hz bandpass filter, but no phase shift is applied.

After residual voltage and current signals pass through the band pass filter, VN becomes VN' due to 90º shift:

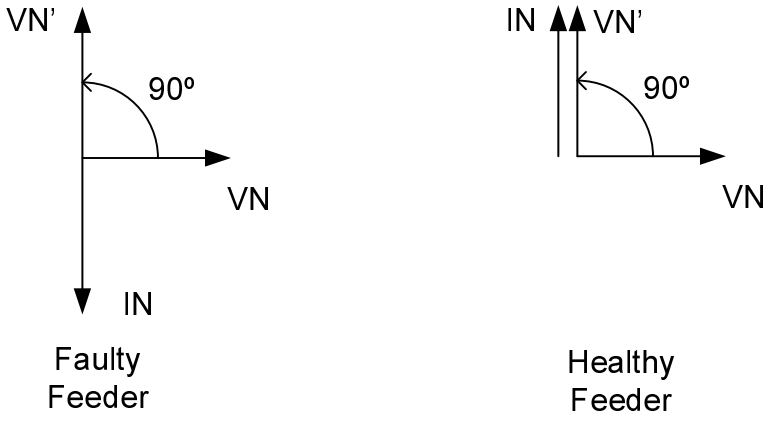

Figure 239: VN phase shift

As a healthy line is capacitive and a faulty line is inductive:

- If VN' and IN are in opposite direction it means feeder is faulty (forward) so transient reactive power is negative.
- If VN' and IN are in same direction it means feeder is healthy (reverse) so transient reactive power is positive.

Dynamic thresholds

The Transient P and transient Q are calculated during fault conditions to help determine the the fault direction.

The transient active power measurement is computed at nominal frequency. (P. trans)

The transient reactive power measurement is computed at 220 Hz. (Q trans)

The maximum Values of the Transient P and Q are stored during the fault's detection and are used for the calculation of the dynamic thresholds.

After that, at every protection pass the dynamic thresholds are updated as:

- Q negative threshold = ***-Dir>Qf Pickup*** + 0.1 * QtransMax
- P negative threshold = ***-Dir>Qf Pickup*** + 0.1 * PtransMax
- P positive threshold = ***Dir>Qr Pickup*** + 0.1 * PtransMax

The P/Q threshold discriminates between the use of P transient and Q transient in the TGF algorithm. When the active power is higher than this threshold while the Q transient value are kept below it, the algorithm uses the P transient as the operate input, otherwise the Q transient value is used instead.

The next figure illustrates the Reactive and active power selection:

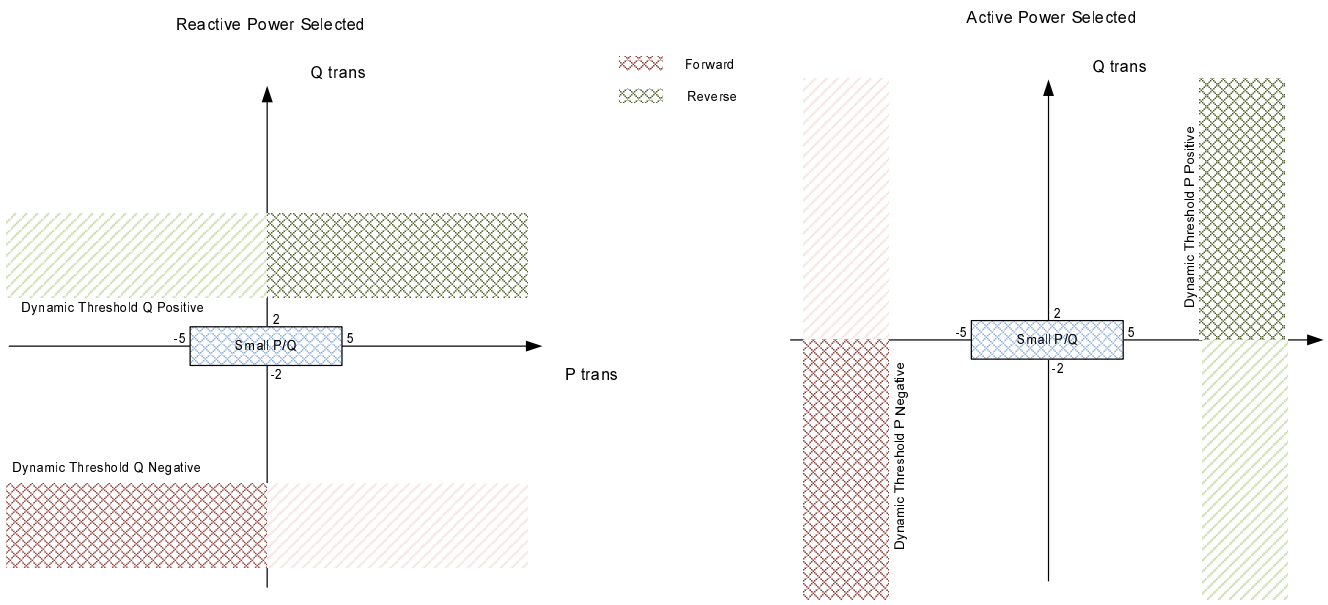

Figure 240: Reactive and active power selection

The following default settings are recommended for majority of applications:

- FTD>VN 8.000 V
- Dir>Qf Pickup 50.0 KW
- Dir>Qr Pickup 21.0 KW

It is important to note that all settings for the TGFD function, including those at 220Hz, can be set based on 50Hz nominal secondary values. This is because the gain of the 220Hz transient filter is 1.

The inputs to this module are:

- The residual voltage
- The residual current
- ***FTD>VN*** (defines the threshold for the TEFD detection).
- ***P/Q Threshold*** (defines the threshold for the selection between P or Q in fault's detection)

The TEFD outputs two signals to indicate a forward and a reverse fault.

The Direction Detector should be disabled in the case of solid grounded system and ground directional overcurrent element is enabled. In such case, the directionality will be determined by the ground directional element. Therefore, TGFD only should be enabled the FTD (Fault Type detector) to detect an intermittent fault or a transient fault.

The following Operands are also available:

Inhibit: used to inhibit the TEF function and reset all associated DDBs

Reset TEF: can be configured as a user-defined manual reset alarms.

10.7.1 TRANSIENT GROUND FAULT DETECTION SETTINGS

FUNCTION

Range: Disabled, Alarm, Latched Alarm, Trip, Configurable

Default: Disabled

The selection of Trip, Alarm, Latched Alarm or Configurable setting enables the TEFD function.

When `Alarm` is selected and the TGFD operates, the LED ALARM will flash, and will self-reset, when the operating conditions are cleared.

When *Latched Alarm* is selected and the TGFD operates, the LED ALARM will flash during the TGFD operating condition, and will be alight steadily, after the conditions are cleared. The LED ALARM can be cleared by issuing a reset command. The ***Output Relay #1 Trip*** will not operate if `Latched Alarm` or `Alarm` setting is selected. ***The Output relay #1 Trip*** can be configured to operate using the TEFD output operands and the FlexLogic.

The ***output relay #1 Trip*** will operate only when `Trip` function is selected, and the TEFD operates. The LED ALARM will not turn on, if the TEFD operates when set to function Trip.

When `Configurable` is selected, neither the trip output, nor the ALARM LED will turn on automatically. They need be configured using their own menus, and FlexLogic operands.

VT INPUT

Range: Ph VT Bnk1-J2, Ph VT Bnk2-K1

Default: Ph VT Bnk1-J2

This setting provides selection of the voltage signal input.

CT INPUT

Range: CT Bank1-J1, CT Bank2-K1

Default: CT Bank 1-J1

This setting provides selection of the current signal input.

VN THRESHOLD

Range: 0.02 to 0.40 in steps of 0.01 x VT

Default: 0.05 x VT

This setting sets the voltage pickup level specified per times VT.

FAULT DIRECTION DETECTION:

DIRECTIONAL STATUS

Range: Disabled, Direction Detector, Ground OC Dir

Default: Direction Detector

This setting determines the direction of measurement for the TEF element.

DIRECTIONAL MODE

Range: Standard, Advanced

Default: Standard

This setting determines which setting will be used for direction element

PQ THRESHOLD

Range: 5.0 to 2000.0 in steps of 0.1 KW

Default: 30.0 KW

This setting defines the PQ shift threshold in secondary primary values. Although the unit for this setting has been expressed as KW; it summarizes the use of KW for active power P and KVar for reactive power Q.

When the reactive power is very small, but the Active power is larger than threshold, the Active Power is used to detect the fault direction

DIR>QF PICKUP

Range: 10.0 to 2000.0 in steps of 0.1 KW

Default: 50.0 KW

This setting sets the pick-up threshold of the P and Q transition in primary values to detect a forward direction fault.

DIR>QR PICKUP

Range: 5.0 to 2000.0 in steps of 0.1 KW

Default: 21.0 KW

This setting sets the pick-up threshold of the P and Q transitions in primary valuers to detect a reverse direction fault.

GROUND OC START [ANSI]

Range: GND IOC [X] PKP, GND TOC [X] PKP

Default: GND IOC 1 PKP

The Direction Detector should be disabled and the directionality will be determined by Earth Fault 1 Measured.

Note:
[X]: Total No of Ground IOC elements and No of Ground TOC Elements, respectively

FAULT TYPE DETECTION

FTD> STATUS

Range: Disabled, Enabled

Default: Disabled

This setting enables the fault type detection in TEF element.

FTD> VN [ANSI]

Range: 0.02 to 0.40 in steps of 0.01 x VT

Default: 0.04 x VT

This setting sets the pick-up threshold for the resides voltage of the fault type detection element.

FTD> TIME WINDOW [ANSI]

Range: 0.500 to 20.000 s in steps of 0.001 s

Default: 2.000 s

This setting sets the time window for the fault type detector.

FTD> FAULT COUNT

Range: 0 to 10 in steps of 1

Default: 3

This setting sets the failure number during the time window.

RESET TIME

Range: 30 s to 12000 s in steps of 30 s

Default: 60 s

This setting sets the reset timer.

RESET TGF[X]

Range: Off, Any FlexLogic Operand

Default: Off

This setting resets the Transient Ground Fault Detection element.

BLOCK

Range: Off, Any FlexLogic Operand

Default: Off

The TGFD element will be blocked, when the selected operand is asserted.

OUTPUT RELAYS

Range: Do Not Operate, Operate

Default: Do Not Operate

EVENTS

Range: Disabled, Enabled

Default: Enabled

TARGETS

Range: Disabled, Self-Reset, Latched

Default: Latched

10.7.2 TRANSIENT GROUND FAULT DETECTION LOGIC

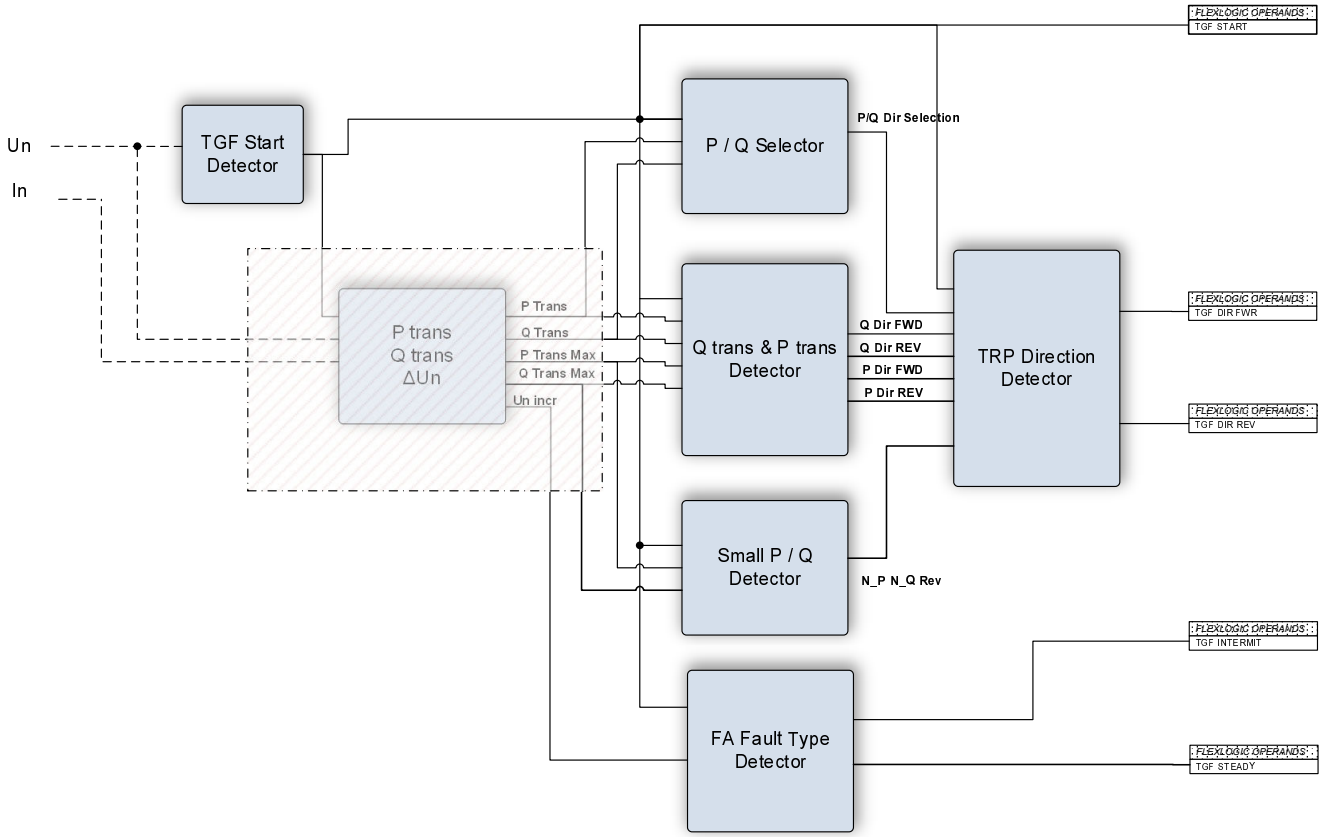

Figure 241: Simplified TGFD scheme

Figure 242:

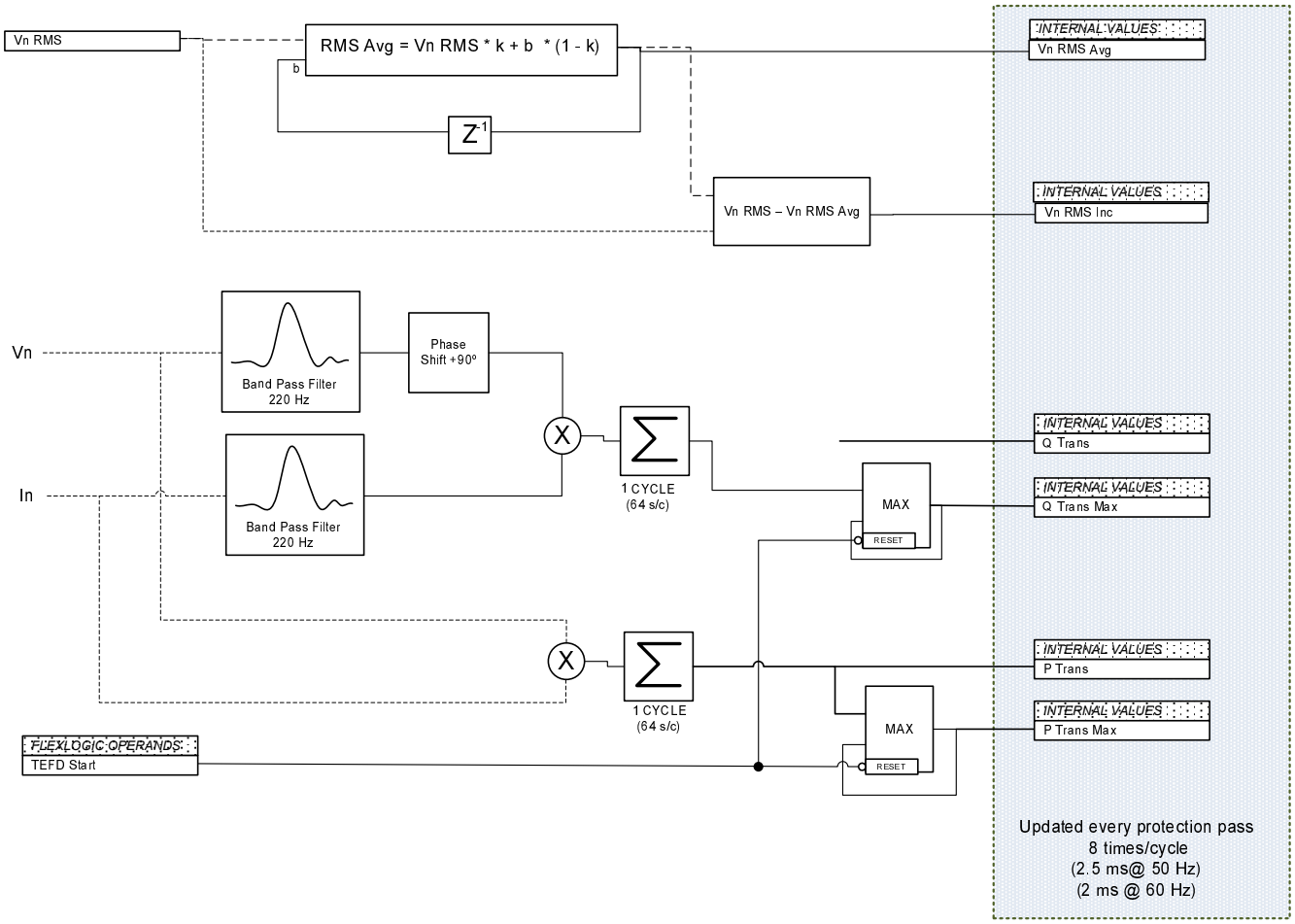

Figure 243: Scheme of the calculation of P Trans, Q Trans and U RMS inc

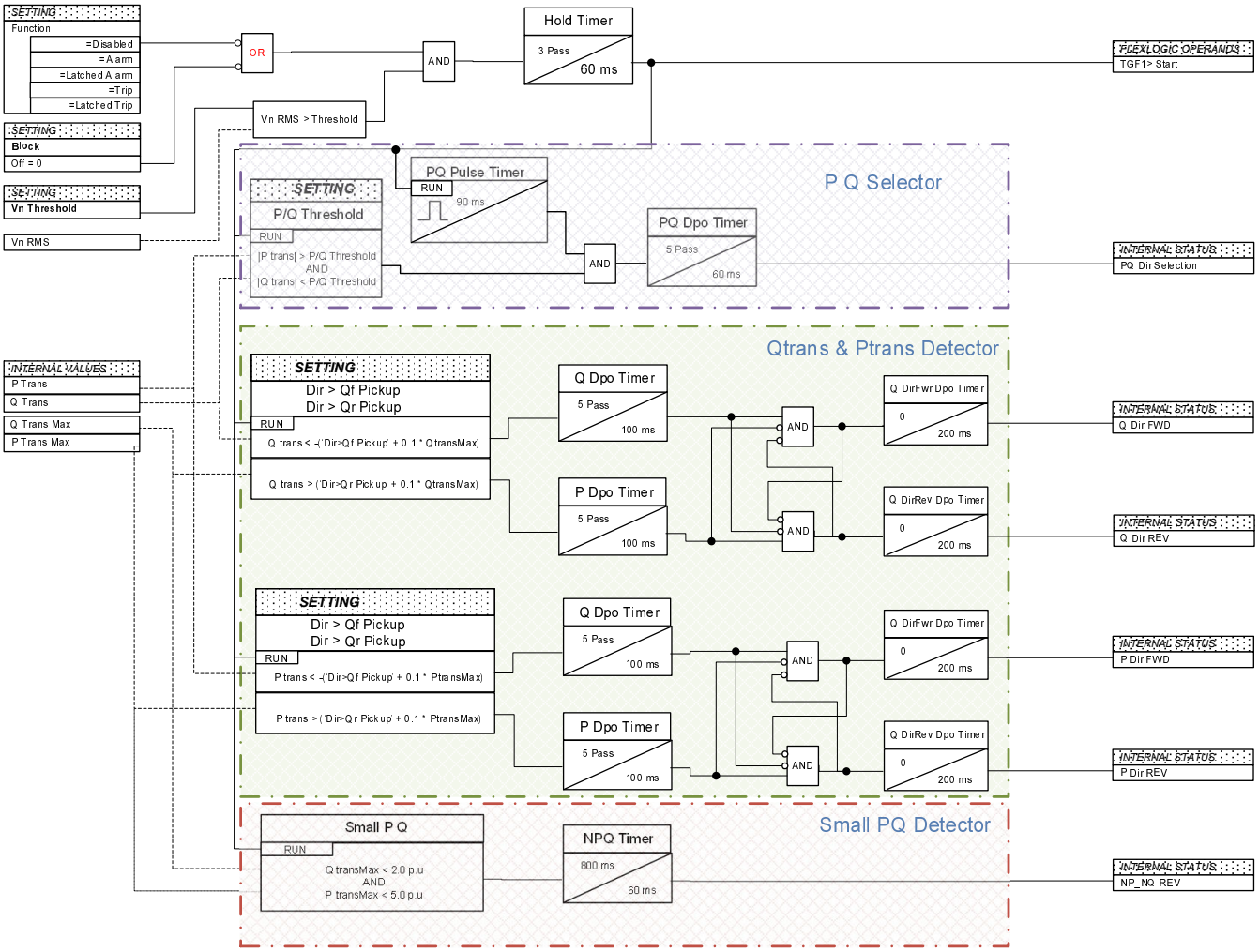

Figure 244: TGFD Start, PQ Detector, Small PQ Selector and dynamic Q trans & P trans

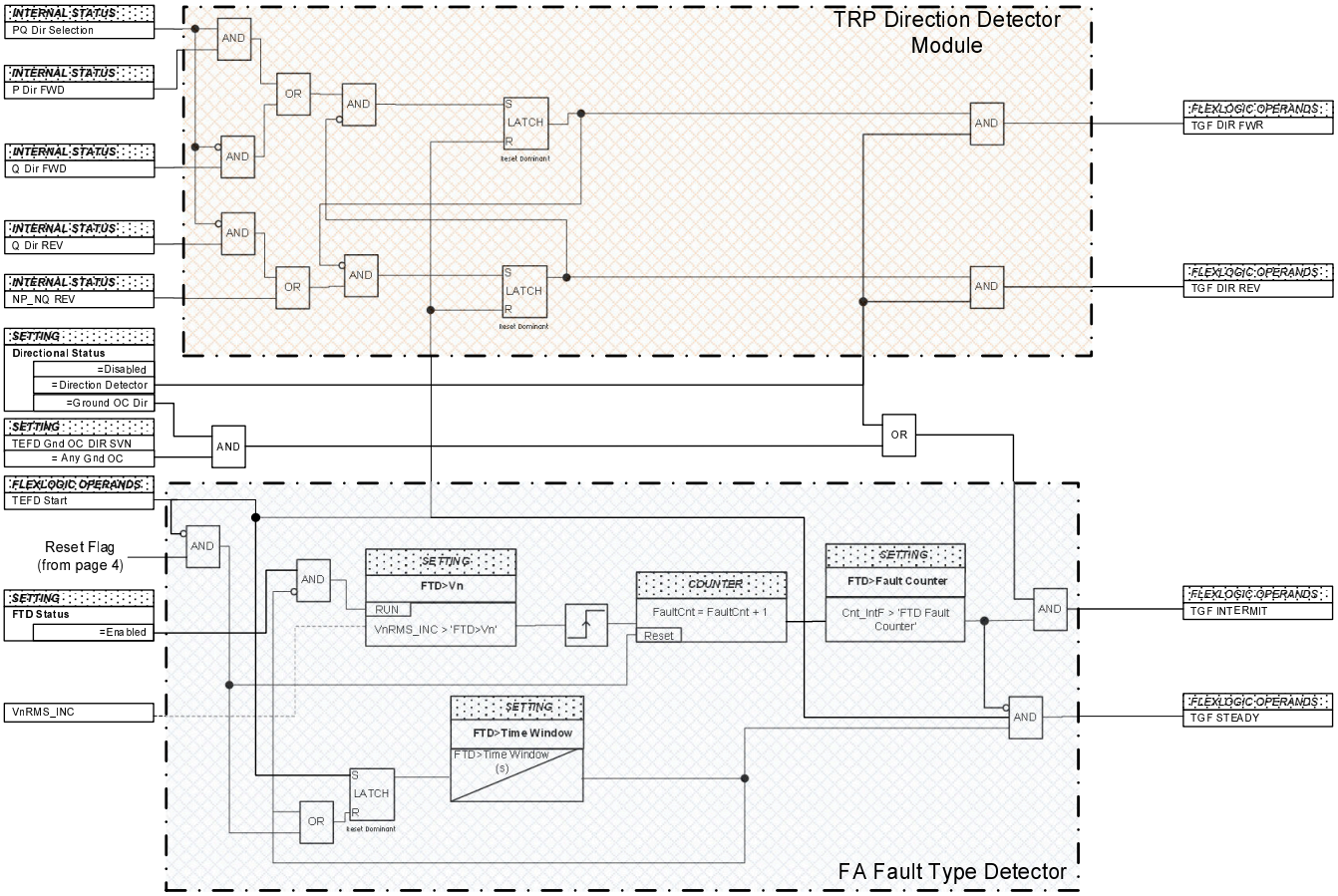

Figure 245: TRP Direction detector Module and FA Fault Type Detector scheme

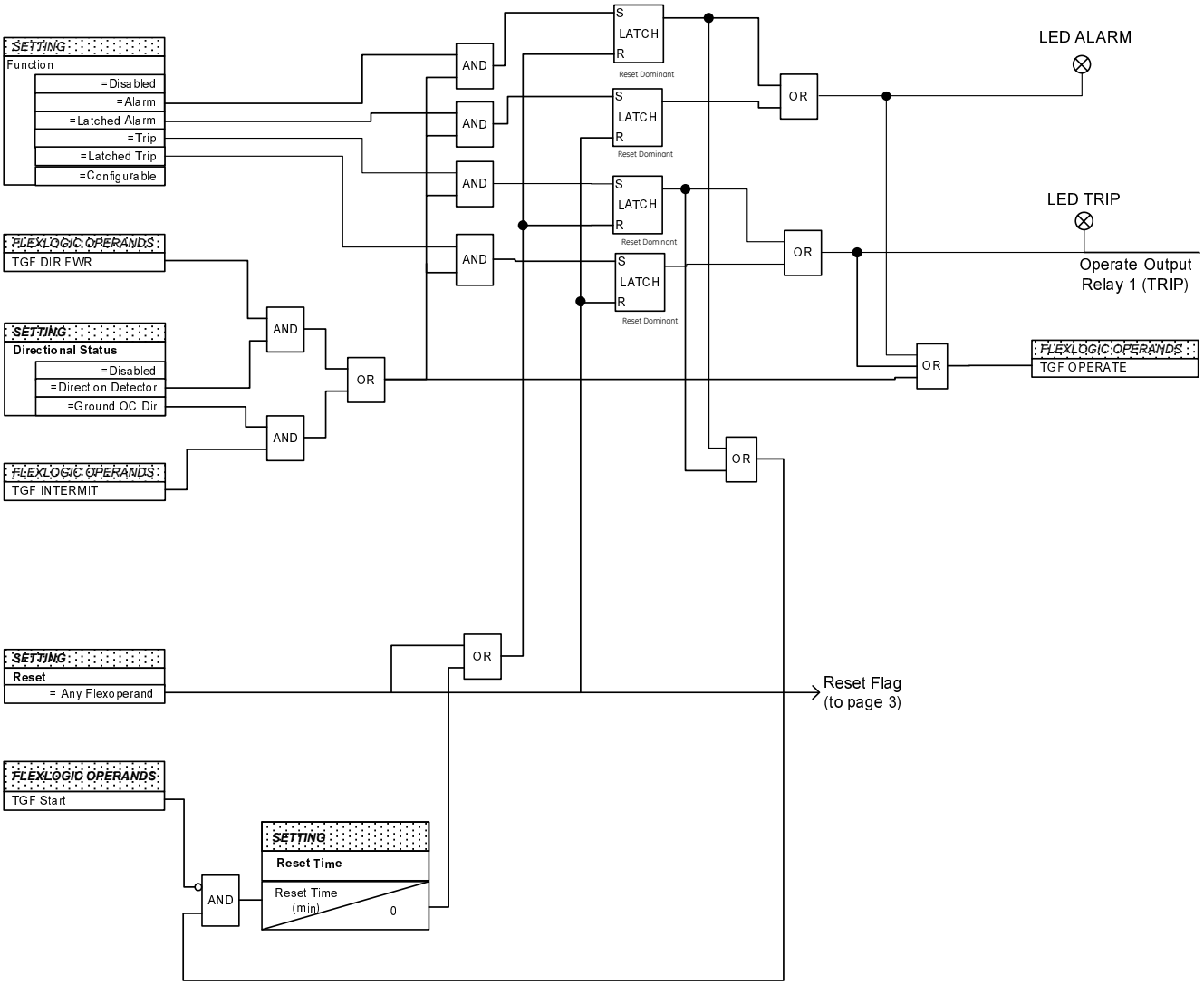

Figure 246: Alarm & Trip outputs signals and Reset scheme

10.8 RTD TEMPERATURE

The Resistance Temperature Detector (RTD) wiring diagram is shown below:

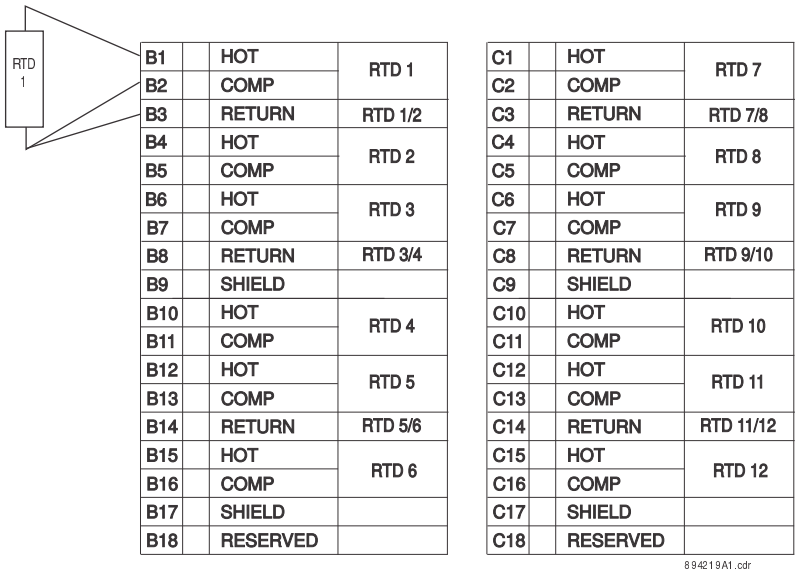

Figure 247: RTD Wiring diagram

> *Note:*
> *To enhance the accuracy of the RTD, ensure all 3 cables are of the same length and gauge. In addition, the Compensation and Return wires must be connected on the RTD side and not on the relay side.*

RTD Inputs

The relay has two methods of supporting RTD inputs.

- I/O cards installed in the relay can supply up to 13 RTDs.
- An optional CANBUS-based Remote Input/Output module (RMIO unit) can also be installed, which can monitor up to 12 additional RTDs (referred to as RRTDs). The RMIO unit supports 6, 9, or 12 RRTDs.

Hardware and software is provided to receive signals from external Resistance Temperature Detectors (RTDs) and convert these signals into a digital format for use as required. These channels are intended to be connected to any of the RTD types in common use.

Depending on the order code (Advanced Monitoring option selected), the relay is supplied with one combo card consisting of one RTD input, one Ohms input, four DCmA inputs and seven DCmA outputs. Additionally, the relay can be furnished with up to two optional RTD cards, each of them having 6 RTD input channels. Only slots B and C can accept the optional RTD cards.

> *Note:*
> *If only one RTD card is ordered at the time the relay is ordered, this RTD card is always shown in slot B. The order code selection does not allow for an RTD card in slot C, if no RTD card is ordered in slot B.*

> *Note:*
> *An I/O card L ordered in Slot G will contain an additional RTD input on the card. It will be the highest RTD number shown (i.e. if 1 additional RTD card is used, then the low voltage I/O (LVIO)RTD will be RTD #7).*

An alphanumeric name is assigned to each channel; this name is included in the channel actual values. It is also used to reference the channel as the input parameter to features designed to measure this type of parameter. Selecting the type of RTD connected to the channel configures the channel. The conversion chart is shown in the following table.

RTD Temperature vs. Resistance

TEMPERATURE		RESISTANCE (IN OHMS)			
°C	°F	100 Ω PT (IEC 60751)	120 Ω NI	100 Ω NI	10 Ω CU
–40	–40	84.27	92.76	77.30	7.49
–30	–22	88.22	99.41	82.84	7.88
–20	–4	92.16	106.15	88.45	8.26
–10	14	96.09	113.00	94.17	8.65
0	32	100.00	120.00	100.00	9.04
10	50	103.90	127.17	105.97	9.42
20	68	107.79	134.52	112.10	9.81
30	86	111.67	142.06	118.38	10.19
40	104	115.54	149.79	124.82	10.58
50	122	119.40	157.74	131.45	10.97
60	140	123.24	165.90	138.25	11.35
70	158	127.08	174.25	145.20	11.74
80	176	130.90	182.84	152.37	12.12
90	194	134.71	191.64	159.70	12.51
100	212	138.51	200.64	167.20	12.90
110	230	142.29	209.85	174.87	13.28
120	248	146.07	219.29	182.75	13.67
130	266	149.83	228.96	190.80	14.06
140	284	153.58	238.85	199.04	14.44
150	302	157.33	248.95	207.45	14.83
160	320	161.05	259.30	216.08	15.22
170	338	164.77	269.91	224.92	15.61
180	356	168.48	280.77	233.97	16.00
190	374	172.17	291.96	243.30	16.39
200	392	175.86	303.46	252.88	16.78
210	410	179.53	315.31	262.76	17.17
220	428	183.19	327.54	272.94	17.56
230	446	186.84	340.14	283.45	17.95
240	464	190.47	353.14	294.28	18.34
250	482	194.10	366.53	305.44	18.73

Note:
RTD type copper (Cu) is only available when order code option 'S' is chosen for Slot B or C.

RTD Protection

The relay can monitor up to 13 RTDs and 12 RRTDs, each of which can be configured to have a trip temperature and an alarm temperature. The RTD Temperature protection menu will be seen on the relay upon availability of RTD input/inputs. The RRTD Temperature protection setpoints can be seen only if the relay has the RMIO module installed and validated. The minimum RTD Temperature requirement is to set the setpoint ***TYPE***. The default value for ***TYPE***, for each RTD is `100 Ω Platinum`. The protection RTD Trip, and RTD Alarm from the menu are optional. They respond to directly measured RTD temperature. The Alarm temperature is set slightly above the normal measured temperature for the transformer top-oil, bottom-oil, or LTC oil. The Trip temperature is normally set at the maximum permissible oil temperatures defined as dangerous for the transformer and the transformer insulation.

This element also monitors the RTD broken connection and blocks the RTD trip and alarm functions if the RTD connection is detected as Open or Shorted and generates RTD Open and RTD Shorted FlexLogic operands. An RTD is detected as Open when the RTD connection is either open or the temperature is greater than 250°C. An RTD is detected as Shorted when the RTD connection is either shorted or the temperature is equal to less than -40°C.

> *Note:*
> *The RTD input is active regardless of whether or not, the RTD Trip, or/and RTD Alarm functions are enabled.*

Path:*Setpoints* > *RTD Temperature* > *RTD 1[X]*

Path:*Setpoints* > *RRTD Temperature* > *RRTD 1[X]*

TRIP FUNCTION

Range: Disabled, Trip, Configurable

Note: Relays with firmware version 4 and later have a Latched Trip option

Default: Disabled

If a trip is not required from the RTD, select `Configurable`. This enables the RTD without producing a trip.

NAME

Range: Up to 13 alphanumeric characters

Default: RTD 1

TYPE

Range: 100 Ω Platinum, 100 Ω Nickel, 120 Ω Nickel, 10Ω Copper

Default: 100 Ω Platinum

Selects the type of the RTD used.

TRIP TEMPERATURE

Range: 1°C to 250°C in steps of 1°C (33°F to 482°F in steps of 2°F)

Default: 155°C (311°F)

TRIP PICKUP DELAY

Range: 0 s to 600 s in steps of 1 s

Default: 2 s

TRIP DROPOUT DELAY

Range: 0 s to 600 s in steps of 1s

Default: 0 s

TRIP OUTPUT RELAY X

Range: Do Not Operate, Operate

Default: Do Not Operate

ALARM FUNCTION

Range: Disabled, Alarm, Latched Alarm

Default: Disabled

ALARM TEMPERATURE

Range: 1°C to 250°C in steps of 1°C (33°F to 482°F in steps of 2°F)

Default: 130°C (266°F)

ALARM PICKUP DELAY

Range: 0 s to 600 s in steps of 1 s

Default: 2 s

ALARM DROPOUT DELAY

Range: 0 s to 600 s in steps of 1 s

Default: 0 s

ALARM OUTPUT RELAY X

Range: Do Not Operate, Operate

Default: Do Not Operate

BLOCK

Range: Off, Any FlexLogic operand

Default: Off

EVENTS

Range: Disabled, Enabled

Default: Enabled

TARGETS

Range: Disabled, Self-reset, Latched

Default: Latched

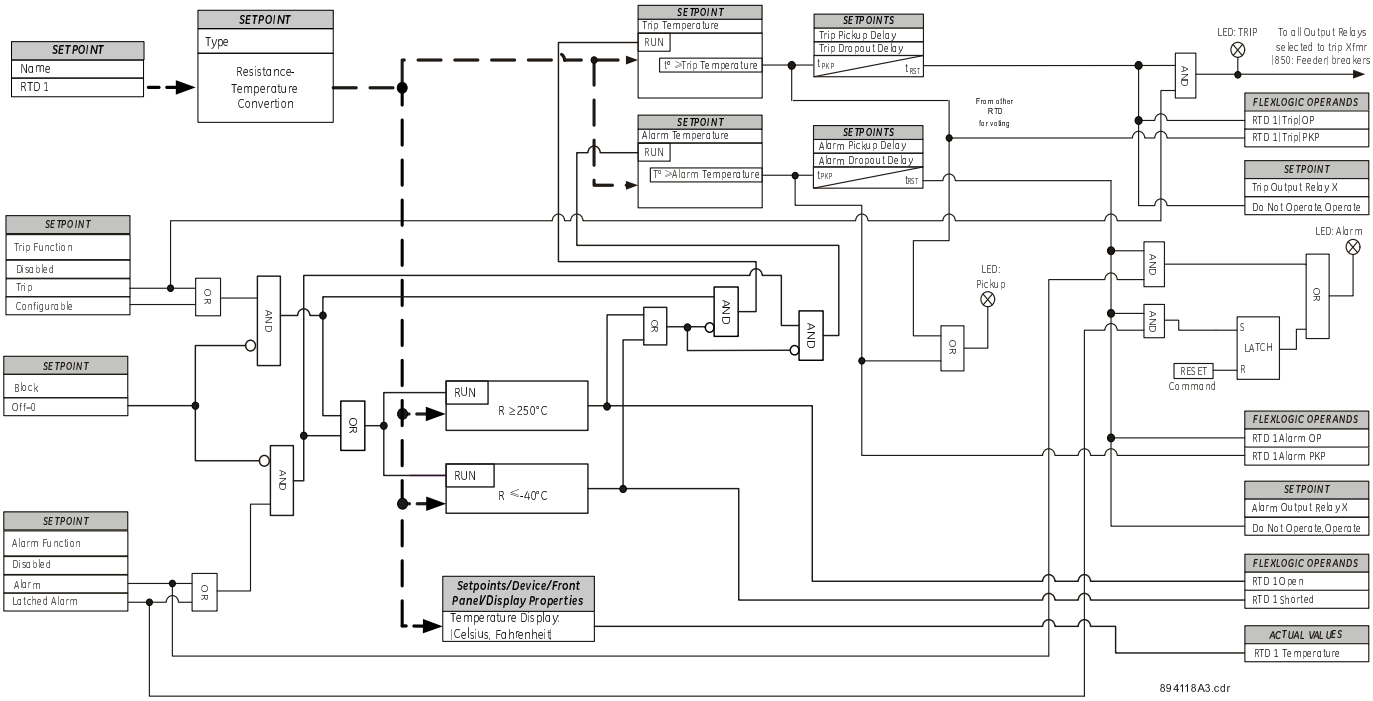

Figure 248: RTD Protection logic diagram

10.9 RTD TROUBLE

When set to Alarm or Latched Alarm, this element monitors all the RTDs that are either programmed as Alarm or Trip or Configurable and generates an alarm if any of the RTDs are detected as Open or Shorted. Upon detection of an RTD Open or Shorted condition, the element also asserts the RTD Trouble PKP and RTD Trouble OP and operates the assigned output relay. Both RTDs and RRTDs can be monitored using this element.

Path: ***Setpoints*** > ***Monitoring*** > ***RTD Trouble***

FUNCTION

Range: Disabled, Alarm, Latched Alarm

Default: Disabled

ALARM OUTPUT RELAY X

Range: Do Not Operate, Operate

Default: Do Not Operate

EVENTS

Range: Disabled, Enabled

Default: Enabled

TARGETS

Range: Disabled, Self-reset, Latched

Default: Latched

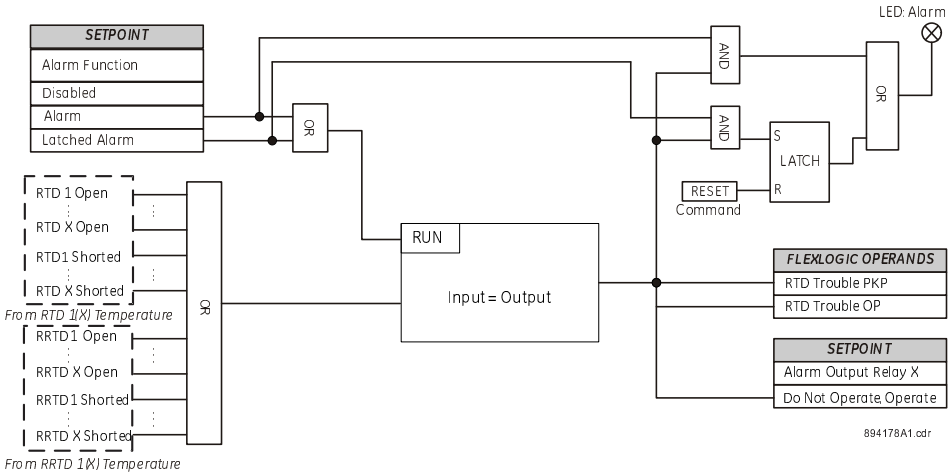

Figure 249: RTD Trouble logic diagram

10.10 LOSS OF COMMUNICATIONS

This section covers the functionality of the Loss of Communications element.

The relay monitors activity on an interface via the configured protocol for this interface. The communications status is set for each protocol.

If communication is lost, the enabled interface will issue a *Loss of Comms* event and operate a combination of output relays/states.

> *Note:*
> *The **MODBUS ACTIVITY TIMEOUT** specifies the minimum time without Modbus communication. This timeout is used to declare the Modbus 'Loss of Communication' state. The **MODBUS ACTIVITY TIMEOUT** must be set to a value other than 0 for the Loss of Communication"monitoring to work properly.*

> *Note:*
> ***MODBUS ACTIVITY TIMEOUT** is set under: **Setpoints** > **Device** > **Communications** > **Modbus Protocol***

Path: ***Setpoints*** > ***Monitoring*** > ***Loss of Comms***

FUNCTION

Range: Disabled, Trip, Alarm, Latched Alarm, Configurable

Note: Relays with firmware version 4 and later have a Latched Trip option

Default: Disabled

INTERFACE

Range: Serial, Serial + Ethernet, Ethernet, All

Default: Serial

Only the protocols associated with the selected interface are shown in this screen as options. For example, if "Ethernet" is selected, select the Ethernet protocols to monitor. The Ethernet protocols selection is defined as EthernetProtocolBitmask bitmasks.

PICKUP DELAY

Range: 0 to 600 s in steps of 1

Default: 2 s

OUTPUT RELAY X

Range: Do Not Operate, Operate

Default: Do Not Operate

BLOCK

Range: Off, Any FlexLogic operand

Default: Off

EVENTS

Range: Disabled, Enabled

Default: Enabled

TARGETS

Range: Disabled, Self-reset, Latched

Default: Latched

Logic diagram

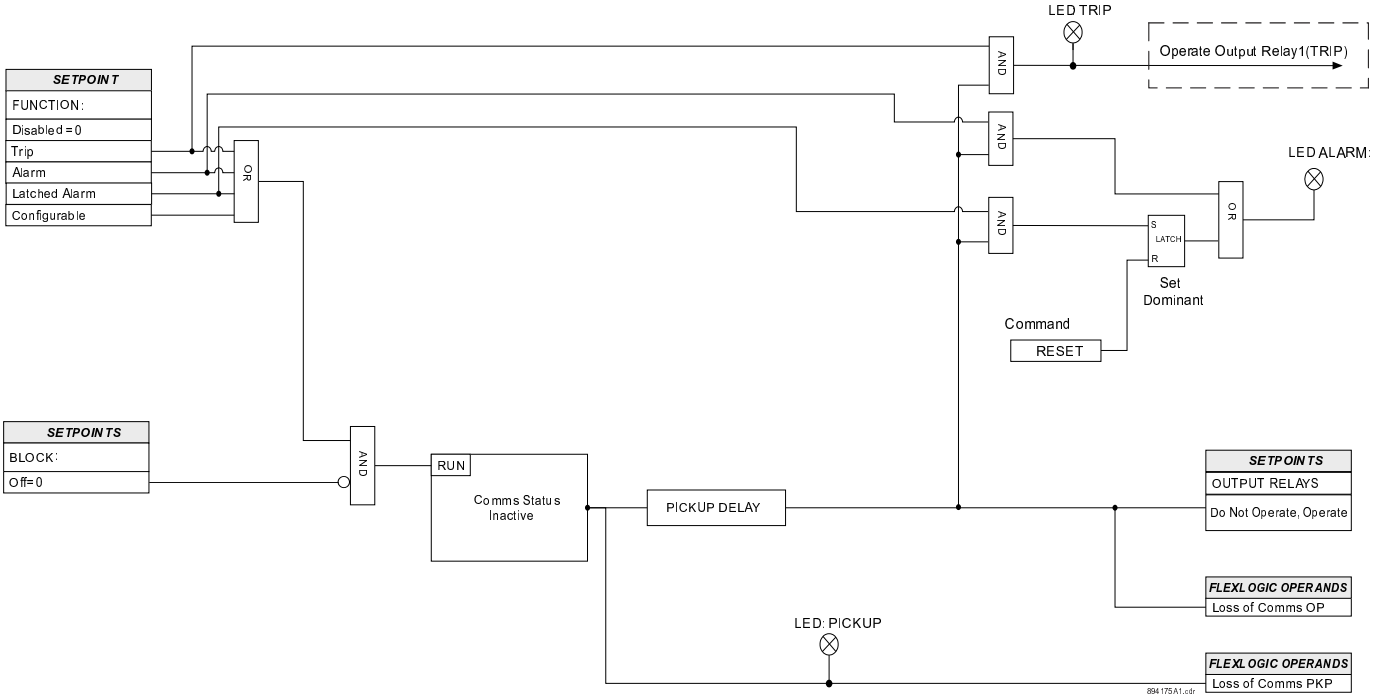

Figure 250: Loss of Communications logic diagram

10.11 INCIPIENT CABLE FAULT

Before a permanent fault occurs, there are usually signs of degrading insulation, which manifest themselves as short, mostly half-cycle spikes appearing around or near the phase voltage peak. Due to short duration of such spikes, they are not usually detected by the feeder's instantaneous protection. This is because instantaneous protection operates on the RMS or fundamental frequency of the phase quantity with a relatively high pickup.

The Incipient Cable Fault Detection element responds to transient (usually ½ cycle) faults in one phase only, which indicates that cable insulation is degrading. This means a permanent fault is likely to happen in the near future. The incipient fault element can produce a trip after a configured number of occurrences within a programmed time, or it can also be based on the accelerating frequency of occurrences.

> *Note:*
> *Changes to any of the incipient cable fault detector settings resets of the number of the incipient faults detected to zero.*

> *Note:*
> *The pickup operand is asserted once a load consistency check is performed after the fault inception. The Load Consistency Check algorithm uses positive sequence current (I1) of 2 cycles pre-fault and 4 cycles post-fault.*

The figure illustrates a recorded field case of an incipient phase B fault. The top portion of the figure shows the raw A, B, and C currents. The bottom portion shows the neutral current (iN) in blue and reveals the fault period from under the load and the superimposed phase B current (iFB) in red.

The superimposed current shows two fault current appears as the data slides through the two-cycle memory window. During the actual fault, the neutral current and the superimposed phase B currents closely correspond, confirming the incipient fault hypothesis and identifying the affected phase.

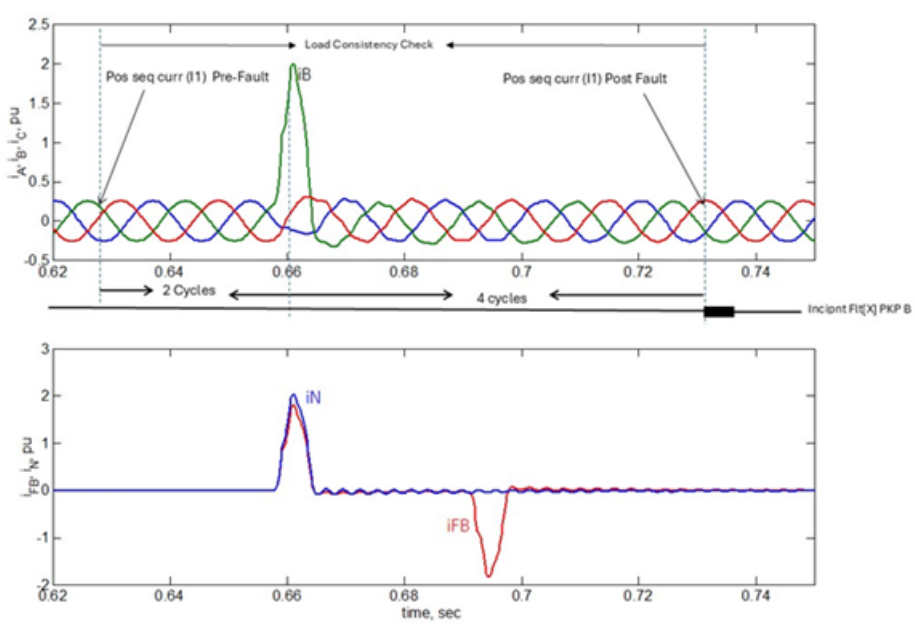

Figure 251: Illustration of the algorithm

> *Note:*
> *Phase currents (top), Calculated neutral and superimposed phase B current (bottom)*

10.11.1 INCIPIENT CABLE FAULT SETTINGS

Range: Disabled, Trip, Latched Trip, Alarm, Latched Alarm, Configurable

Default: Disabled

When the Alarm function is selected, and the Incipient Fault operates, the LED ALARM will flash, and will self-reset, after the operating conditions are cleared.

When the Latched Alarm function is selected, and the Incipient Fault operates, the LED ALARM will flash during the Incipient fault operating condition and will be stay illuminated after the conditions are cleared. It can be cleared by issuing a reset command. The output relay #1 TRIP will not operate if `Latched Alarm` or `Alarm` is selected. The Output relay #1 TRIP can be configured to operate using the Incipient fault output operands and the FlexLogic.

The output relay #1 TRIP will operate only when `Trip` or `Latched Trip` is selected, and incipient fault operates. If `Latched Trip` is selected, the output relay will be ON even after the fault conditions are cleared until a reset command is issued. The LED ALARM will not turn on, if the incipient fault operates when set to `Trip` or `Latched Trip`.

When `Configurable` is selected, neither the trip output, nor the ALARM LED will turn on automatically. They need to be configured using their own menus, and Flexlogic operands.

Signal Input

Range: All available CT banks

Default: Ph CT Bnk1-J1

This setting provides selection of the current signal input.

Pickup

Range: 0.100 to 10.000 x CT in steps of 0.010 x CT

Default: 0.50 x CT

This setting is used to select pickup level of the overcurrent detector in per unit of CT nominal.

Reset Delay

Range: 0.000 to 65.535 s in steps of 0.001

Default: 0.100 s

Specifies a reset time of the output after operate is asserted.

Mode of Operation

Range: No.of counts, Counts per Window

Default: No.of counts

This setting provides Mode for incipient cable fault protection. There are 2 modes of operation available for this element.

- in “No.of faults” mode, operate will be asserted on chosen number of incipient fault count.
- in “Counts per window” mode, operate will be asserted on chosen number incipient fault count within the time, specified by the Detect Window setting.

Incipient Fault Count

Range: 1 to 10 in steps of 1

Default: 2

This is the nNumber of Incipient fault events Pickup.

- when Setpoint “Mode of Operation” is selected as No.of counts, function will trip when no.of incipient fault events count equal to fault counts set
- when “Mode of operation” is selected as Counts per window, function will trip on no.of incipient fault events Count equal to fault counts set, occurring in a time window. The time window is set at “Detect Window” setpoint.

Detect Window

Range: 0.000 to 1000.000 sin steps of 0.010 s

Default: 10.000 s

this setting selects a time window, if the setpoint mode of operation is selected as `Counts per window`. This setpoint is not applicable when mode of operation is set to `No.of counts`.

> *Note:*
> *Note: If Detect window is set to it minimum range of 0.000, the operate flag shall pickup on no.of incipient fault count set at “Incipient Fault counts”.*

Block

Default: Off Range: Off, Any operand from the list of FlexLogic operands

Short Description:

The incipient cable fault will be blocked, when the selected operand is asserted.

Output Relay X

Range: Do Not Operate, Operate

Default: Do Not Operate

Any, or all, of output relays from 1 to X can be selected to operate upon Incipient Fault operation. The operation of these output relays is configured by the user.

Events

Range: Disabled, Enabled

Default: Enabled

Targets

Range: Disabled, Self-reset, Latched

Default: Self-reset

In self-reset mode, the targets remain active until function drops out. In latched mode target maintains the set state until deactivated by reset command.

Logic diagram

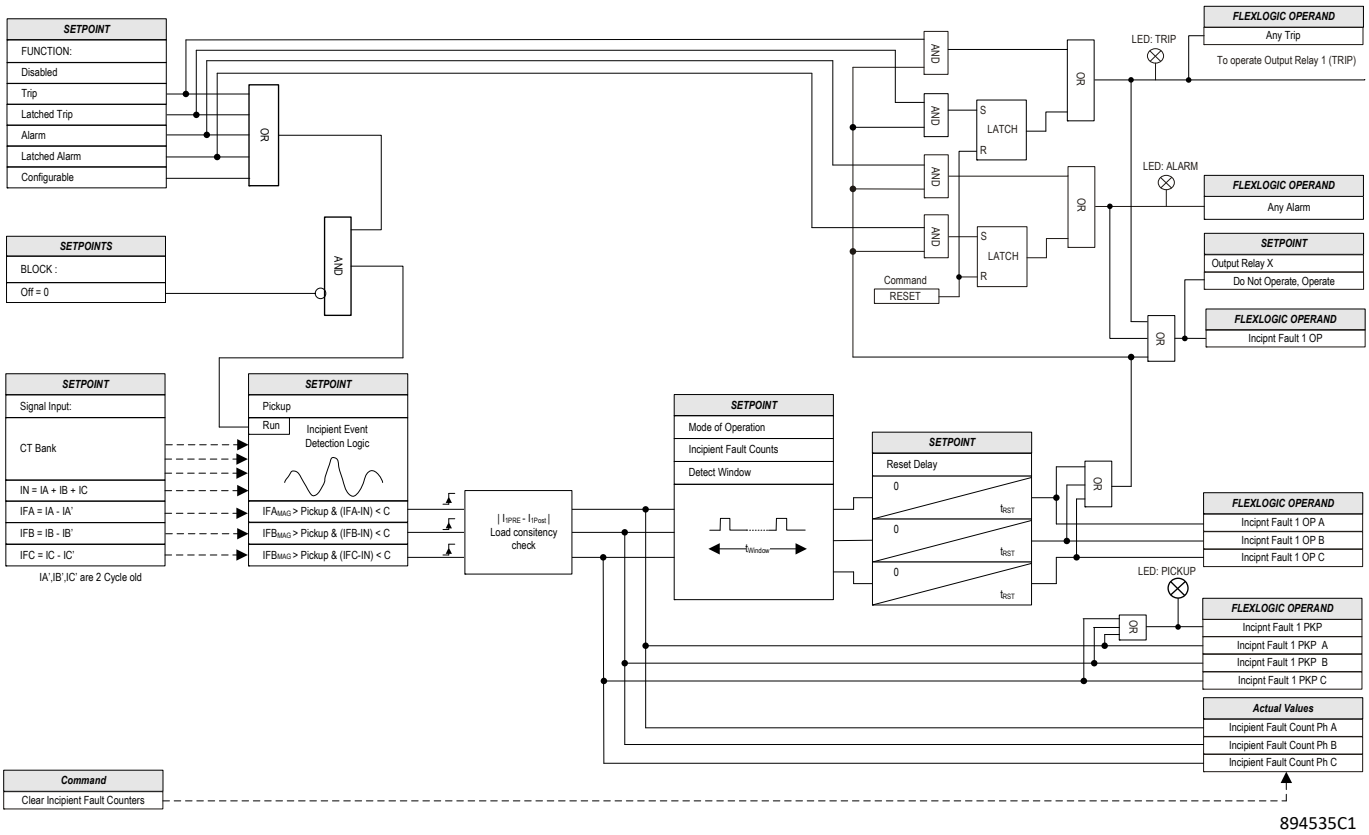

Figure 252: Incipient fault logic diagram

CHAPTER 11

CONTROL

11.1 CHAPTER OVERVIEW

This chapter contains the following sections:

Chapter Overview	528
Control Overview	529
Setpoint Group	530
Local Control Mode	532
Breaker Control	541
Switch Control (89)	546
Pole Discordance (52)	549
Virtual Input Control	557
Trip Bus	558
Breaker Failure (50BF)	561
Arc Flash Protection	567
Synchrocheck (25)	570
Manual Close Blocking	575
Cold Load Pickup	579
Undervoltage Restoration	584
Underfrequency Restoration	588
Bus Transfer	592
Autoreclose	615
CT Supervision	634
VT Fuse Failure (VTFF)	642
Digital Elements	645

11.2 CONTROL OVERVIEW

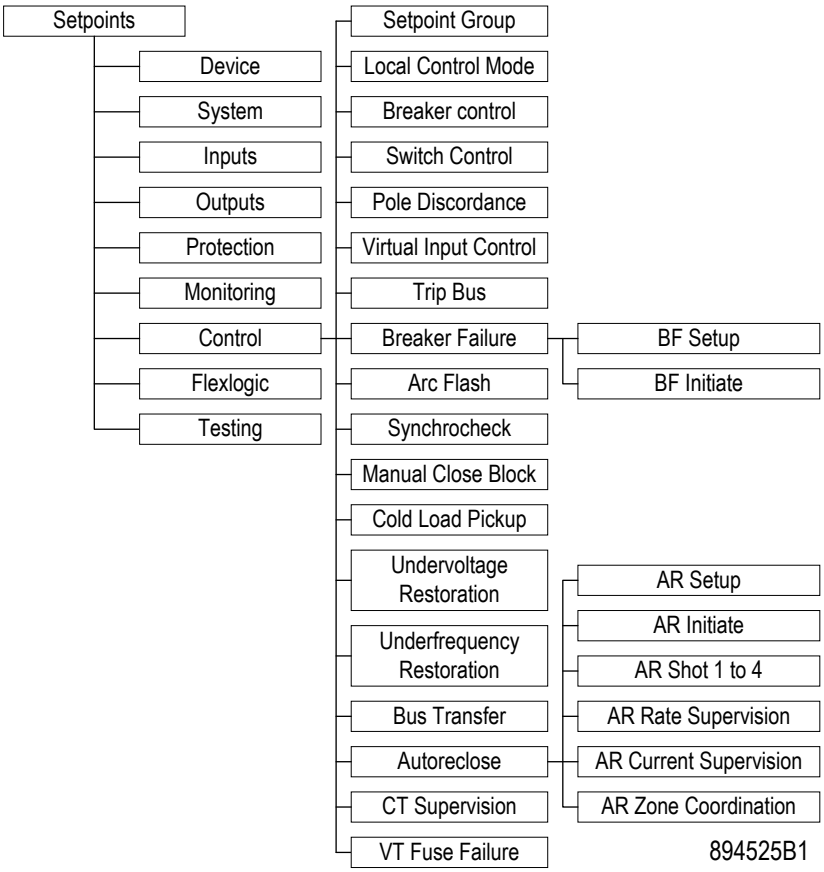

Figure 253: Control Display Hierarchy

11.3 SETPOINT GROUP

The relay provides six setpoint groups. All setpoints contained under the protection setpoints are reproduced in six groups, identified as Setpoint Groups 1, 2, 3, 4, 5 and 6. These multiple setpoints provide the capability for both automatic and manual switching to protection settings for different operating situations. Automatic (adaptive) protection setpoint adjustment is available to change settings when the power system configuration is altered.

Automatic group selection can be initiated from the autoreclose, ***SETPOINT GROUPS*** and by use of a ***SET GROUP x ACTIVE*** setpoint input. The group selection can be initiated by this input from any FlexLogic operands, inputs, pushbuttons or communications.

Group 1 is the default for the Active Group and is used unless another group is requested to become active. The active group can be selected with the ***ACTIVE SETPOINT GROUP*** setpoint, by ***SET ACTIVE x GROUP*** input or inputs from autoreclose, ***SETPOINT GROUPS***. If there is a conflict in the selection of the active group, between a setpoint, inputs and inputs from functions, the higher numbered group is made active. For example, if the inputs for Group 2, 4, and 6 are all asserted the relay uses Group 6. If the logic input for Group 6 then becomes de-asserted, the relay uses Group 4. Some application conditions require that the relay does not change from the present active group. This prevention of a setpoint group change can be applied by setting Change Inhibit inputs (1 to 16). If needed, typically this change inhibit is done when any of the overcurrent (phase, neutral, ground, or negative sequence), overvoltage, bus or line undervoltage, or underfrequency elements are picked-up.

Path: ***Setpoints*** > ***Control*** > ***Setpoint Groups***

ACTIVE SETPOINT GROUP

Range: 1,2,3,4,5,6

Default: 1

The ***ACTIVE SETPOINT GROUP*** setting is used for manual selection of the Active Setpoint Group.

SET GROUP 2 (3,4,5,6) ACTIVE

Range: Off, Any FlexLogic operand

Default: Off

The setpoint selects the FlexLogic operand that initiates change of the ***ACTIVE SETPOINT GROUP***.

GROUP CHANGE INHIBIT 1 (UP TO 16)

Range: Off, Any FlexLogic operand

Default: Off

The setpoint selects the FlexLogic operand that inhibits change of the active setpoint group.

EVENTS

Range: Disabled, Enabled

Default: Enabled

Logic diagram

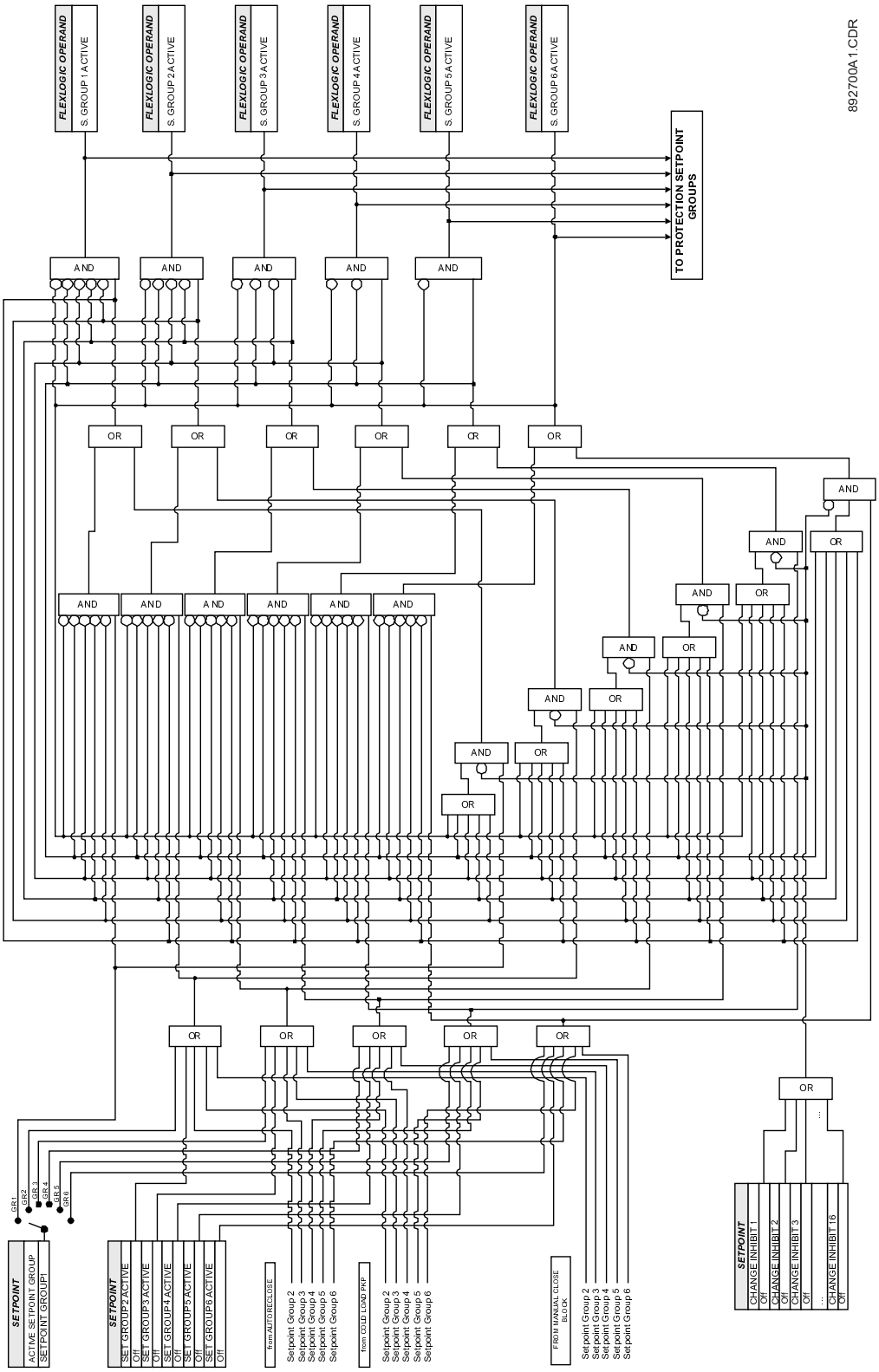

Figure 254: Setpoint Groups logic diagram

11.4 LOCAL CONTROL MODE

Local Mode

When the setpoint ***LOCAL MODE*** is enabled, Open and Close control of breakers and switches is performed using relay pushbuttons (PBs), or contact inputs from PBs installed in close proximity to the relay (such as on the relay panel, or in the relay cubicle).

The addition of contact inputs an other FlexLogic operands for closing and opening the breaker, or switch while in local mode provides the flexibility to use PBs mounted near the relay.

If contact inputs or other FlexLogic operands are used while the Select Before Operate (SBO) mechanism is enabled, the breaker or the switch shall first be selected using the relay PBs, and then opened or closed using the designated relay panel or cubicle PBs. (The ***SELECT BEFORE OPERATE*** setpoint is only available for relays supporting a single breaker.) If the SBO mechanism is disabled while the relay supports configurable single line diagrams (SLDs), only the breaker PBs either on the relay front panel or mounted nearby will work. The menu setpoints for local switch Open and Close are hidden and deactivated.

If the relay does not support configurable SLD, the setpoints for local switch Open and Close are omitted from the menu.

While in Local Mode, the letters LM are displayed on the relay display banner. In addition, an LED can be programmed to turn ON when the relay is set to Local Mode. By default the relay comes with one LED programmed to show Local Mode.

In Local Mode, control for the breakers and disconnect switches can be accessed from the relay front panel (PBs programmed for Open and Close) or by contact inputs for Open and Close from PBs installed near the relay. Hard coded SLD PBs are designated for Tag, Block and Bypass Block for each component upon selection. In this mode, the ***LOCAL OPEN*** and ***LOCAL CLOSE*** setpoints for Breaker Control or Switch Control (see the respective logic) are active.

The same Local Control Mode applies if Contactor is selected as a switching device.

Remote Mode

When Remote Mode is enabled, the switches are controlled (open/close) from any assigned FlexLogic operand, contact input, virtual input, virtual output, remote input, or via communication. The Control Mode menu is designed to switch the control for both breakers and switches to either Remote Mode (***LOCAL MODE*** setpoint set to Off, or the selected Local Mode input de-asserted), or Local Mode (***LOCAL MODE*** setpoint asserted).

Breaker Mode defaults

The default value of the breaker control mode with one breaker is `Remote` (***LOCAL MODE*** set to Off or the selected Local Mode input de-asserted). In this mode, all programmed setpoints from the respective menus for Breaker Control and Switch Control are active. The same Remote Mode applies if a Contactor is selected as a switching device. The default value for relays with two breakers is `Local`.

Navigation

The 8 Series front panel provides navigation pushbuttons (PBs) which highlight the component (breaker or disconnect switch) from the single line diagram. The navigation PBs (Up/Down or Up/Down/Left/Right depending on relay front panel model), are used to browse through the Single Line Drawing (SLD) components. These PBs are used for SLD navigation only. The navigation starts with highlighting the first breaker, and then goes through all other components in sequence, until the last one (breaker or switch). Only the breakers and switches included in the SLD from the display will be browsed (navigated).

Select Before Operate

Once the breaker or the switch is highlighted in the SLD using the navigation PBs, the component must be selected before open or close action is performed. The selection of the component is performed by pressing “ENTER” key

from the front panel. A flash message `BKR # Selected`, or `Sw # Selected` appears on the screen to denote the selection. Once selected, the text from the first three tabs from the display corresponding to the PBs 1, 2, and 3 changes to **Tag**, **Block**, and **Bypass**. At this stage, the selected breaker or switch can be Opened or Closed using the programmed PBs, and Tagged/Blocked/Bypassed using the SLD PBs.

For PBs supporting one breaker only, the Local Control Mode menu includes the setpoint ***SELECT BEFORE OPERATE***, which can be set to either Enabled or Disabled. When it is set to Disabled, tagging, blocking and block bypassing commands are disabled from both Local and Remote control. In this mode the breaker can be controlled directly by the programmed Open and Close PBs. The local control for the disconnect switches is suspended. In this mode they can only be controlled remotely, i.e. using pre-programmed contact inputs, virtual inputs, comms, or any selected FlexLogic operand for closing and opening commands. The remote block and block bypass flags are also suspended. With ***SELECT BEFORE OPERATE*** set to Disabled the relay behaves similar to some other legacy relays, where when in Local mode the breaker is directly controlled by pressing the Open and Close PBs without additional confirmation, and when in Remote mode the breaker is directly controlled by executing the remote open and close commands from the configured setpoints.

When the ***SELECT BEFORE OPERATE*** setpoint is set to Enabled, the navigation, the breaker or switch selection, as well as the blocking, bypassing and tagging are operational when in Local mode. When switched to Remote mode, the remote blocking and bypassing will also be operational.

Note:
*The selected component from SLD will be deselected if either the time programmed in setpoint **Bkr/Sw Select Timeout** expires, or the **ESCAPE** pushbutton is pressed. The **HOME** button will not de-select the selected object. To navigate to home page, the component must be first de-selected on the SLD page.*

The programmed PBs for breaker or switch Open and Close can be used only in local mode when an active object is selected in the SLD. The selected device can be opened or closed provided it is not blocked or tagged. If no operation is detected, the selection is removed, and the selected PB must be pressed again to enable the selection. The local mode breaker selection and operation is only active if the user has proper level security access.

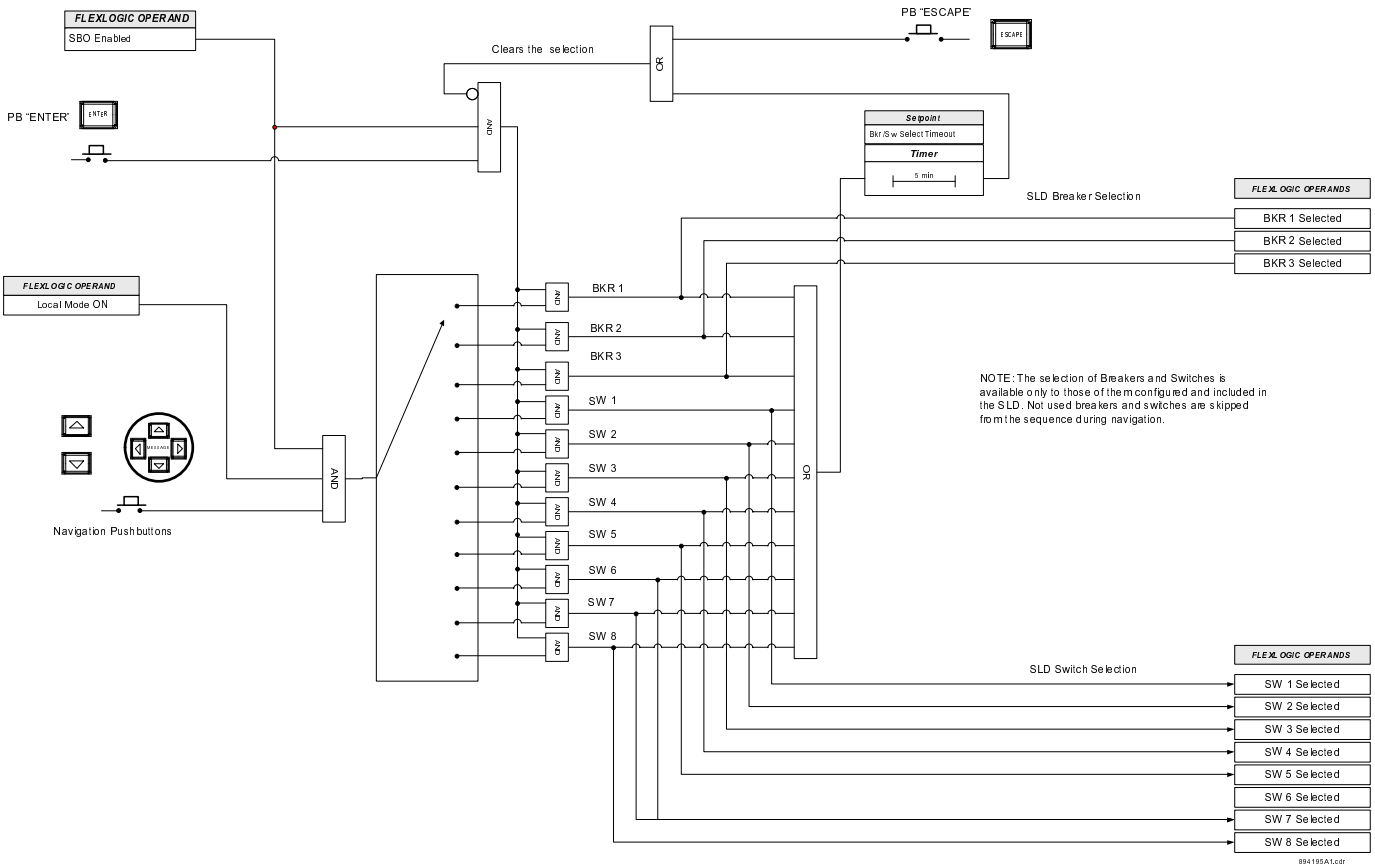

Figure 255: Navigation and SLD component selection

PB Block (Hard coded SLD Pushbutton)

Blocking of a breaker or switch can be used for inhibiting the close or open operation while in Local Mode. The selected breaker or disconnect switch can be blocked. If block was not applied to the selected component, pressing the **Block** PB will block either the Open or Close command depending on the existing state. When the block is active, the letter **B** appears in the SLD next to the controlled component

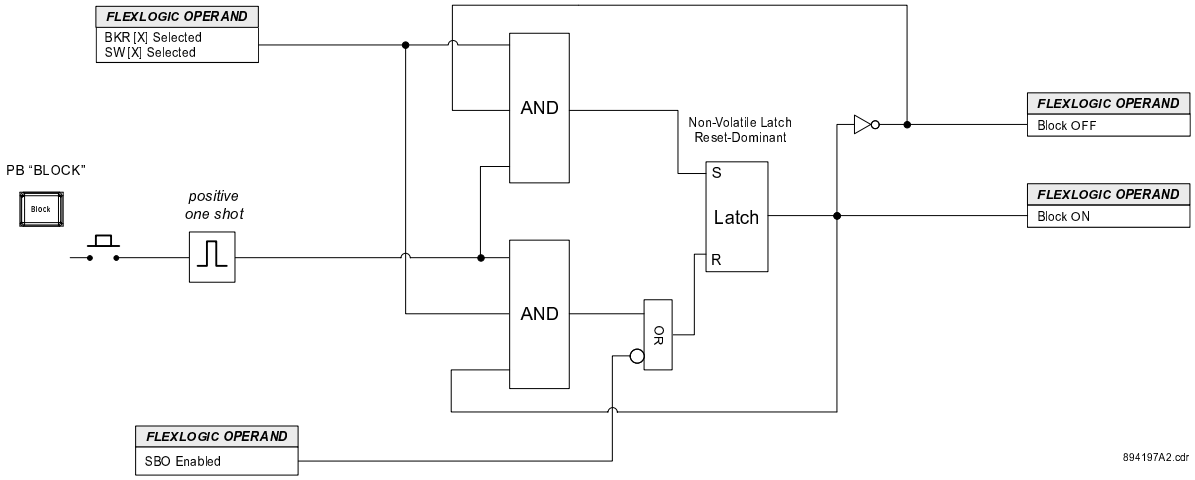

Figure 256: SLD Pushbutton Block logic diagram

PB Bypass (Hard coded SLD Pushbutton)

Blocking of the command can be bypassed using the SLD pushbutton **Bypass**. When pressed, the previously applied block is bypassed. For example if the block was applied when the Breaker/Switch was opened, pressing the PB **Bypass** will allow closing command. If the bypass is active for the selected breaker or switch, the letters **By** appear next to the symbol in the SLD.

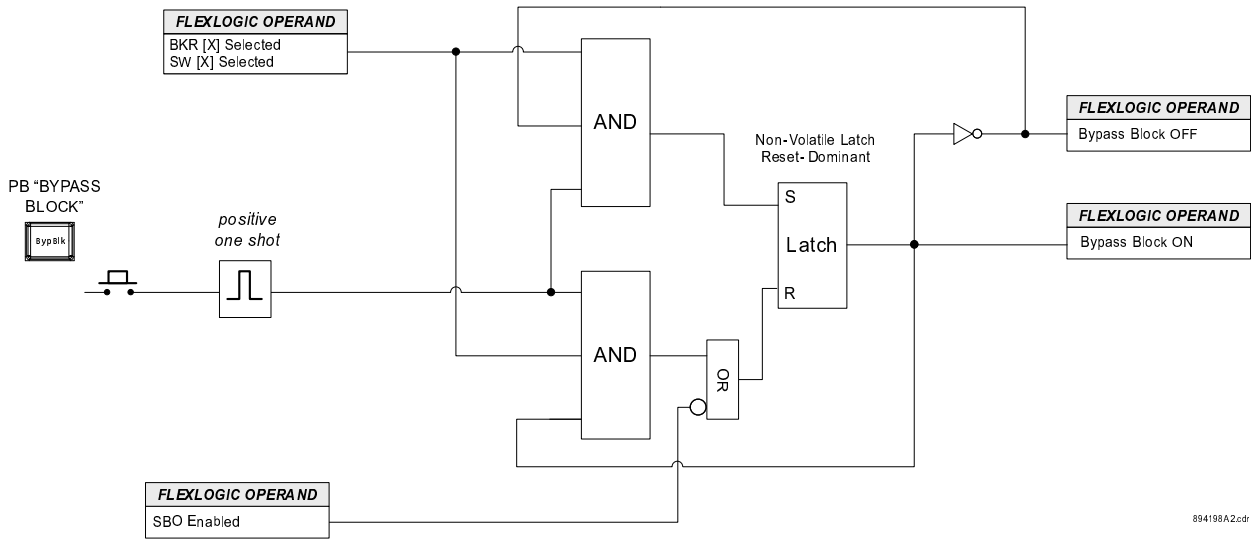

Figure 257: SLD Pushbutton Bypass Block logic diagram

PB Tag (Hard coded SLD pushbutton)

Lockout/Tagout is a practice and procedure to safeguard employees from unexpected energization or startup of machinery and equipment, or hazardous energy during service or maintenance activities. If a breaker or disconnect switch is tagged, the open and close controls are inhibited.

Both remote and local control commands are blocked if the tagged operand BKR# Tag ON, or SW# Tag ON is active for the selected particular breaker or switch respectively. The breaker or switch is tagged by pressing the SLD pushbutton **Tag**. If the selected switching device is tagged, a letter **T** appears under its symbol. Tagging can be achieved in local mode using the front panel control from the configurable SLD screens. The Pushbutton Tag logic diagram shows the tagging logic diagram for a switch. The logic applies to one breaker or switch at the time in the single line diagram.

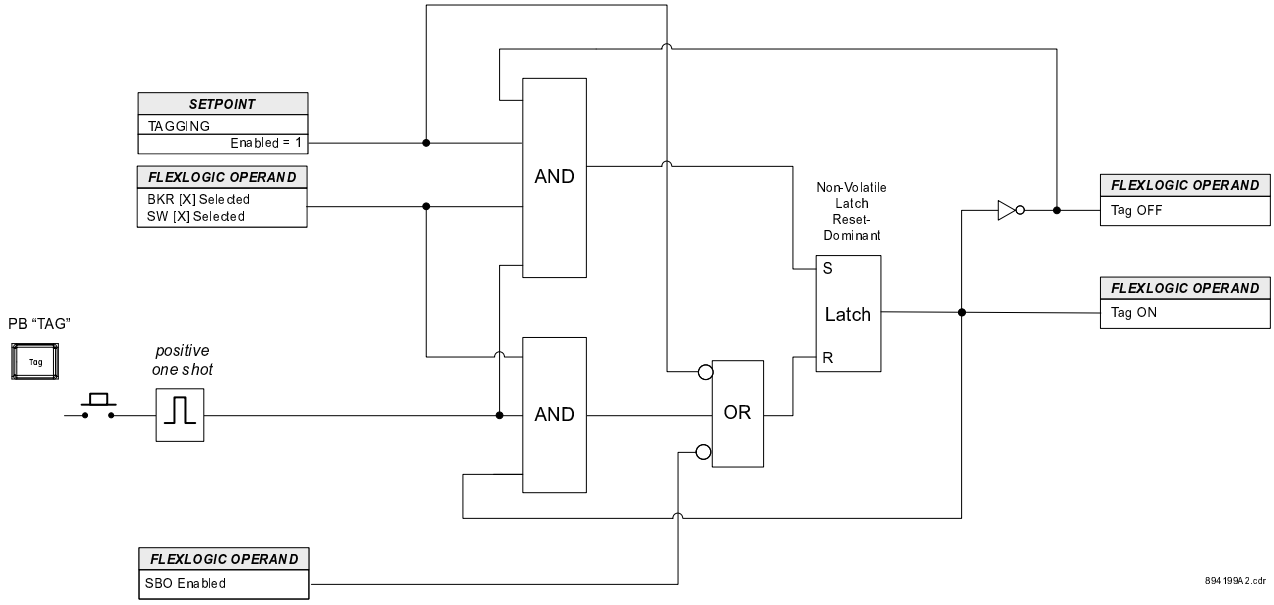

Figure 258: Pushbutton Tag logic diagram

Note:
The pushbuttons, Tag, Block and Bypass Block are used for both breakers and switches when selected in the SLD. Only one component at the time can be selected in the SLD.

Note:
Tagging, blocking, or bypassing block can be performed in Local Mode, and only when the component (breaker or switch) is selected in the SLD. The applied action of tagging, blocking or bypassing block is retained for this component after it's been deselected. To change the status of the applied action, the component need be reselected.

Note:
The Local Mode control allows programming of separate pair of PBs for Open and Close commands to breakers and for Open and Close commands to switches. If desired, one pair of pushbuttons can be programmed for Open and Close commands to both breakers (contactors) and switches.

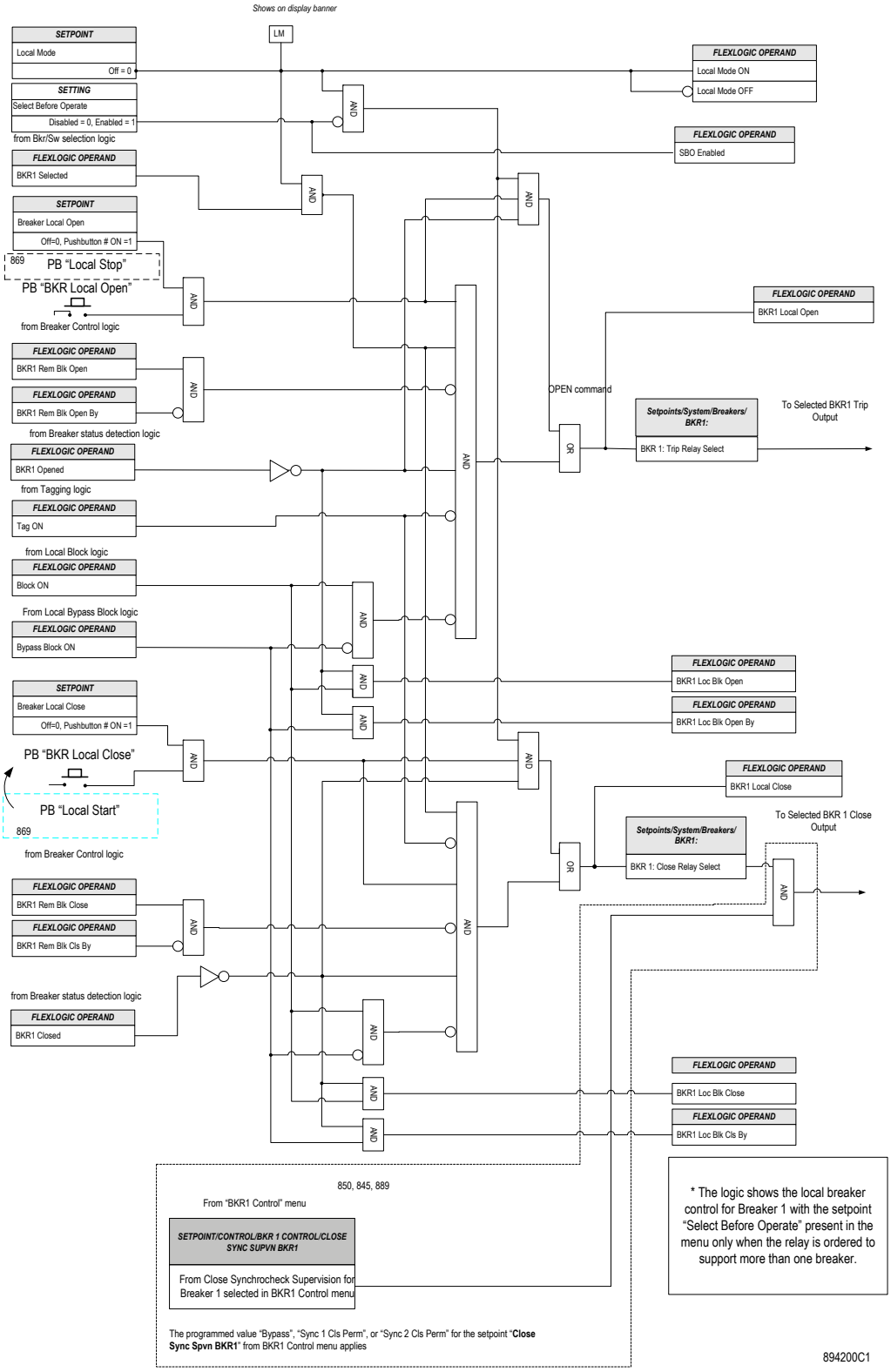

Figure 259: Local Control for breakers

Figure 260: Local Control for contactors

Figure 261: Local Control for Switches

Path: ***Setpoints*** > ***Control*** > ***Local Control Mode***

For this path the HMI menus vary depending on the order code and the number of breakers selected.

> *Note:*
> *For relays supporting single breaker control, the SW Local Open and SW Local Close setpoints appear in the menu only if the relay is ordered with Advanced SLD; and the* ***SELECT BEFORE OPERATE*** *setpoint is enabled. In all other cases, these setpoints are hidden and inactive.*

SELECT BEFORE OPERATE

Range: Disabled, Enabled

Default: Disabled (in most cases, but dependent on order code)

This setpoint is included in the Local Control Mode menu only if the 8 Series relay supports one breaker. This setpoint is omitted for relays supporting more than one breaker.

When the Select Before Operate (SBO) is disabled, and Local Mode is set, the breaker control can be performed directly by pressing the corresponding front panel pushbuttons (or those mounted in close proximity to the relay). No component selection or additional confirmation is needed. The same applies when the breaker control is in Remote mode.

> *Note:*
> *When SBO is disabled, all local and remote flags such as blocking, bypassing, and tagging are reset.*

Setting the SBO to Enabled enables the navigation and the selection of a component from the SLD, so that the pushbuttons Open or Close from the front panel (or those mounted in close proximity to the relay) can be used in Local Mode only after the component is selected. All flags such as blocking, bypassing and tagging can be initiated during this mode. Blocking and bypassing can also be initiated remotely, when in Remote Mode.

LOCAL MODE

Range: Off, On, Any FlexLogic operand

Default: On or Pushbutton 5 Off

The ***LOCAL MODE*** setting places the relay in Local Mode. The relay is in Remote mode, if not forced into Local mode by this setpoint (i.e. ***LOCAL MODE*** is disabled, or the selected input de-asserted). When in Local Mode, both Breakers and Disconnect switches can be controlled using the faceplate pushbuttons and SLD pushbuttons.

BKR /SW SELECT TIMEOUT

Range: 1 to 10 min in steps of 1 min

Default: 5 min

This setting specifies the available time for open/close commands, after a breaker or a disconnect switch has been selected in the single line diagram.

BKR(CONTACTOR) LOCAL OPEN

Range: Off, Any FlexLogic operand

Default: Pushbutton 1 ON

This setpoint is active, when Local Mode is activated. The breaker open command can be initiated by the selected configured pushbutton.

BKR(CONTACTOR) LOCAL CLOSE

Range: Off, Any FlexLogic operand

Default: Pushbutton 2 ON

This setpoint is active, when Local Mode is activated. The breaker close command can be initiated by the selected configured pushbutton.

> *Note:*
> *When you close a selected breaker locally using a relay pushbutton, Synchrocheck supervision is used, as defined by the setting value configured for the setpoint **Close Sync Spvn BKR[X]** from the **BKR[X] Control** menu. For example, if you select the value **Sync 1 Cls Perm** in the **Close Sync Spvn BKR1** setpoint, initiation of the **BKR Local Close** command will not close BKR1 unless the Synchrocheck 1 permits closing by producing a Sync 1 Cls Perm signal*

SW LOCAL OPEN

Range: Off, Any FlexLogic operand

Default: Pushbutton 1 ON

This setpoint is active, when Local Mode is activated. The switch open command can be initiated by the configured pushbutton. The setpoint appears in the Local Control Mode menu only when advanced SLD is selected when ordering the relay.

SW LOCAL CLOSE

Range: Off, Any FlexLogic operand

Default: Pushbutton 2 ON

This setpoint is active, when Local Mode is activated. The switch close command can be initiated by the programmed faceplate pushbutton. The setpoint appears in the Local Control Mode menu only when advanced SLD is selected when ordering the relay.

TAGGING

Range: Enabled, Disabled

Default: Enabled

When enabled, tagging control is enabled and the TAG key is displayed on the front panel interface. When a breaker or a switch is tagged both the local and remote control of the device is inhibited.

> *Note:*
> *Tagging is applied only from the TAG key and is mostly used for maintenance purposes, and in general when either the open or close control must be inhibited. The tagging cannot be bypassed and can only be disabled (untagged) by pressing the TAG key again.*

LOCAL OPEN DELAY

Range: 0.000 to 600.000 s in steps of 0.001 s

Default: 0 s

This setting delays the local open operation, allowing the user to move away from the equipment before it operates. The time is shown in the form of a countdown timer. ***Time to Open*** value is shown as a pop-up on the front panel when command is executed.

LOCAL CLOSE DELAY

Range: 0.000 to 600.000 s in steps of 0.001 s

Default: 0 s

This setting delays the local close operation, allowing the user to move away from the equipment before it operates. The time is shown in the form of a countdown timer. 'Time to Close' value shown as a pop-up on the front panel when command is executed.

Note:
*The **Time To Close** or **Time To Open** count down value is shown as a pop-up on the Front Panel when the Local Close/Local Open operation command is executed. The user can choose to Cancel this countdown timer by pressing the same Trip/Close pushbutton again. 'Press Again to Cancel' will be displayed on the Front panel countdown timer screen.*

EVENTS

Range: Disabled, Enabled

Default: Enabled

TARGETS

Range: Disabled, Self-reset, Latched

*Default: Self-rese*t

11.5 BREAKER CONTROL

While the Local breaker control is generic as the same front panel pushbuttons are used for control of each selected breaker from the SLD, the remote breaker control requires programming of setpoints for each individual breaker. When the relay is in Remote mode (Local Mode set to Off, or the assigned operand de-asserted), the setpoint ***REMOTE BLOCK OPEN*** and ***REMOTE BLOCK CLOSE*** from the breaker menu can be used. These setpoints can be used to provide Interlocking to the breaker control by assigning appropriate operands. The control for each breaker can be programmed to have Bypass Remote Block Open and Bypass Remote Block Close inputs. These inputs can be programmed if temporary permission for open or close is required.

The remote breaker open and close controls, as well as the blocking and bypassing the block commands are executed as per the programmed setpoints form the Breaker Control menu.

> *Note:*
> *The breaker flags **Remote Block Open**, **Remote Block Close**, **Bypass Rem Blk Open** and **Bypass Rem Blk Close** are inhibited, when the setpoint **SELECT BEFORE OPERATE** residing under Local Control Mode menu is disabled. The breaker remote open and close commands are operational.*

> *Note:*
> *An additional remote breaker status is available for HMI status only.*

Path: ***Setpoints*** > ***Control*** > ***Breaker Control*** > ***BKR1(X)***

REMOTE OPEN

Range: Off, Any FlexLogic operand

Default: Off

The setting specifies the input which, when asserted, initiates a Trip command to output relay selected to open the recloser. When the selected input is asserted, the Trip contact is energized and stays energized until the input drops off, the breaker opens, and the selected Trip seal-in time expires. This setpoint provides the flexibility to operate the Trip output relay by selecting an operand from the list of FlexLogic operands, contact inputs, virtual inputs, or remote inputs. For example the operand Trip Bus 1 Op can be selected to activate this output according to the Trip conditions configured under the Trip Bus 1 menu.

REMOTE CLOSE

Range: Off, Any FlexLogic operand

Default: Off

The setting specifies the input which, when asserted, initiates a Close command to the output relay selected to close the breaker. This setpoint provides flexibility to operate the output relay by selecting an operand from the list of FlexLogic operands.

REMOTE BLOCK OPEN

Range: Off, Any FlexLogic operand

Default: Off

The assertion of the operand assigned to this setpoint prevents the breaker from opening/tripping.

REMOTE BLOCK CLOSE

Range: Off, Any FlexLogic operand

Default: Off

The assertion of the operand assigned to this setpoint prevents the breaker from closing.

BYPASS REM BLK OPEN

Range: Off, Any FlexLogic operand

Default: Off

This setting specifies selection of an input which when asserted bypasses the asserted remote block open signal. Open command is permitted for the breaker.

BYPASS REM BLK CLOSE

Range: Off, Any FlexLogic operand

Default: Off

This setting specifies selection of an input which when asserted bypasses the asserted remote block close signal. Close command is permitted for the breaker.

CLOSE SYNC SPVN BKR

Range: Bypass, Sync 1 Cls Perm

Default: order code dependent (e.g. Bypass or Sync 1Cls Perm)

This setpoint selects whether or not the closing of the breaker is supervised by the synchrocheck function. For this purpose the Synchrocheck element must be enabled.

If the supervision is not bypassed and Close is applied for an application where the breaker is located on radial feeders, or the line is powered by one source only, the ***DEAD SOURCE PERM*** setpoint from the Synchrocheck menu shall not be disabled.

EVENTS

Range: Disabled, Enabled

Default: Enabled

TARGETS

Range: Disabled, Self-reset, Latched

Default: Self-reset

Logic diagram

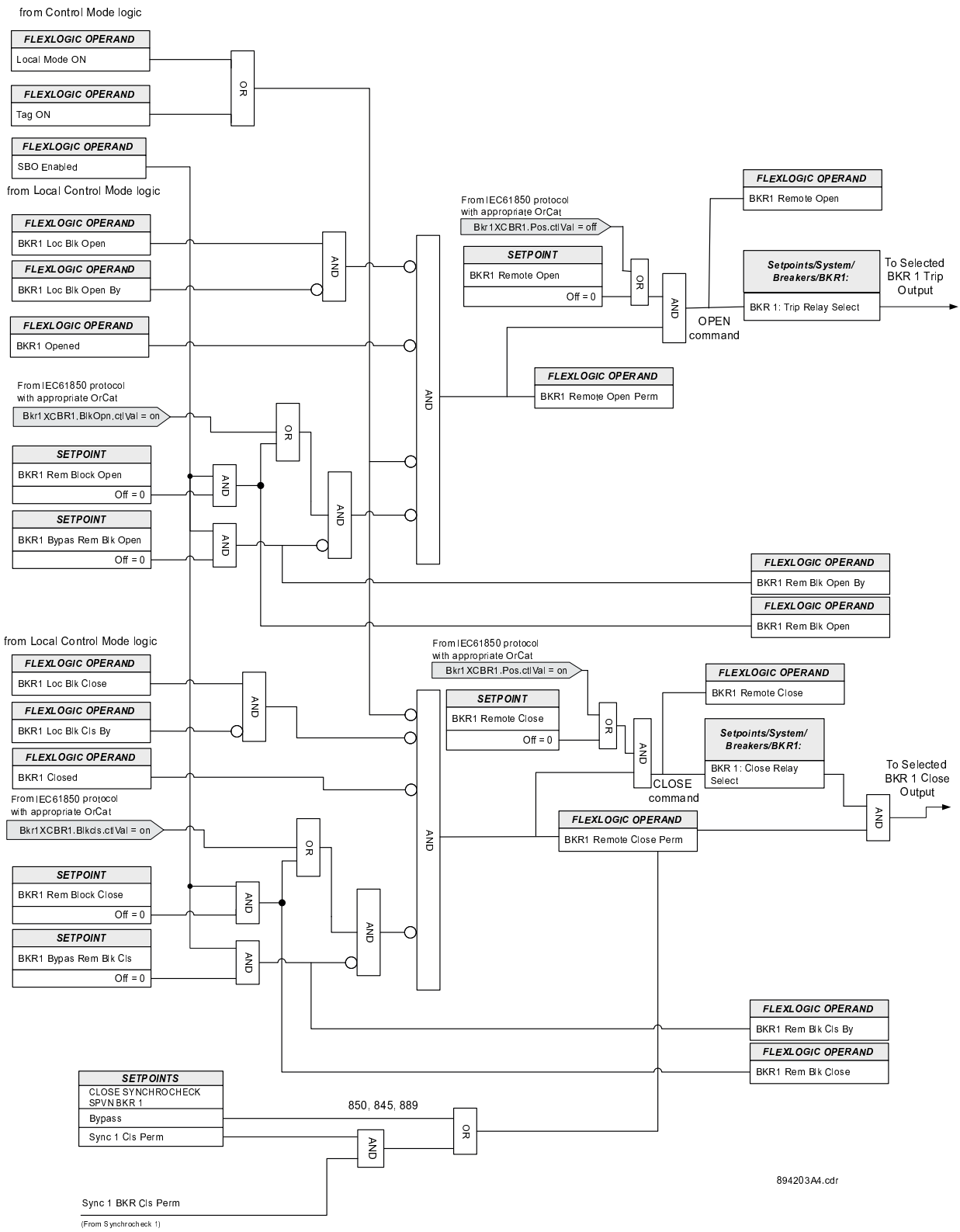

Figure 262: Breaker Control logic diagram

11.5.1 CONTROL AUTHORITY

This section describes the 61850 control authority feature implementation. Within the substation, control commands to the primary equipment, such as the breaker or the disconnect switch, can be originated from one of three levels – Bay, Station or Remote. The local/remote control feature (described in IEC61850 7-4: Annex B) allows users to enable or disable control authority from one or more of the three levels.

The table below shows the control authority applied in the 8 series.

	Switch	Bay control			Manual Control at D&I Platform (process	Non 61850 Bay Control (Front Panel PB, HMI)	Command from		
							Bay	Station	NCC
		Mode of switching authority for local control	Local Control Behavior	Control Authority At Station Level			orCat		
LLN0.LocKey	XCBR.LocX SWI.Loc	LLN0.MltLev	CSWI.Loc	CSWI.LocSta			Local Ctl (Bay)	Station	Remote
IED Local Status = 1	Local Mode ON = 1	Multilevel Control ENABLED	Bay level 61850 auth. ON	Station level 61850 auth. ON					
T	T	F	NA	NA	AA	NA	NA	NA	NA
F	F	F	T	NA	AA	AA	AA	NA	NA
F	F	F	F	T	AA	AA	NA	AA	NA
F	F	F	F	F	AA	AA	NA	NA	AA
T	T	T	NA	NA	AA	AA	NA	NA	NA
F	F	T	T	NA	AA	AA	AA	NA	NA
F	F	T	F	T	AA	AA	AA	AA	NA
F	F	T	F	F	AA	AA	AA	AA	AA

Control Authority settings

BAY LEVEL 61850 AUTHORITY

Range: Off, Any FlexLogic operand

Default: Off

This selects an operand that indicates the Bay level authority status. The operand status is modeled in the IEC 61850 server using the respective breaker's CSWI Loc data object and the operand status is applied to the control authority table to determine the control authority for different levels. It is an Edge driven function.

STATION LEVEL 61850 AUTHORITY

Range: Off, Any FlexLogic operand

Default: Off

This selects an operand that indicates the Station level authority status. The operand status is modeled in the IEC 61850 server using the respective breaker's CSWI Loc data object and the operand status is applied to the control authority table to determine the control authority for different levels. It is an Edge driven function.

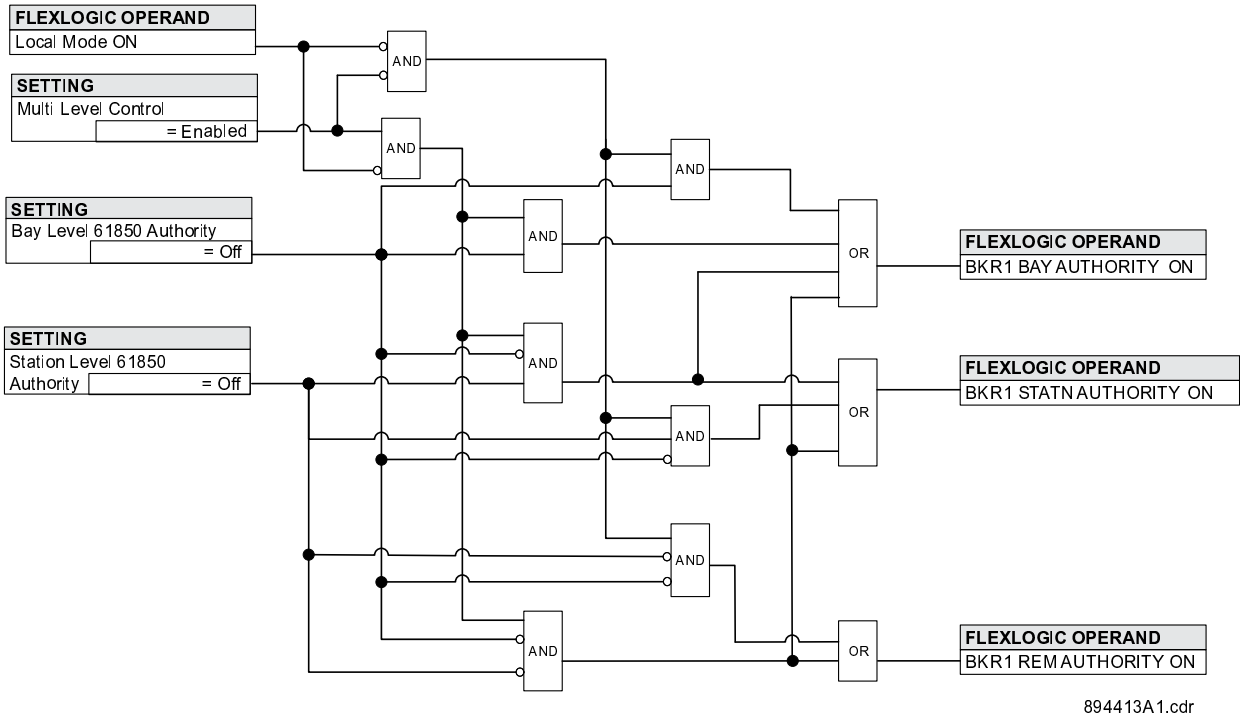

Figure 263: IEC 61850 Control Authority Settings Logic Diagram

Note:
If applicable, we strongly recommended connecting the relay voltage inputs to three-phase VTs and an Aux VT installed across a breaker on the same side of the transformer winding. With this condition in place, select the Synchrocheck Close Permission only for that breaker. Do not select the Synchrocheck Close Permission for the breakers on the other transformer windings.

11.6 SWITCH CONTROL (89)

The disconnect switch control provides local and remote opening and closing of the switches. The local control (Open, Close, Tag, Block, Bypass Block) is performed from the relay front panel pushbuttons when Local Mode is active, and the switch is selected from the displayed single line diagram. The remote switch open and close controls, as well as the blocking and bypassing the block commands are executed as per the programmed setpoints form the Switch Control menu. While the Local switch control is generic and the same front panel pushbuttons are used for every selected component from the SLD, the remote switch control requires programming of setpoints per each individual switch. These settings are defined in the menu of each individual switch control. When the relay is in Remote mode (Local Mode set to Off, or the assigned operand de-asserted), the setpoint ***Remote Block Open*** and ***Remote Block Close*** from the Switch Control menus can be used. These setpoints can be used to provide Interlocking to the switch control by assigning appropriate operands. The control for each disconnect switch can be programmed to have Bypass Remote Block Open and Bypass Remote Block Close inputs. These inputs can be programmed if temporary permission for open or close is required.

> *Note:*
> *The switch **Remote Block Open**, **Remote Block Close**, **Bypass Remote Block Open** and **Bypass Remote Block Close** flags are inhibited, when the setpoint **Select Before Operate** residing under Local Control Mode menu is disabled. The remote open and close commands are still operational.*

Path: ***Setpoints*** > ***Control*** > ***Switch Control*** > ***SW 1(X) Control***

REMOTE OPEN

Range: Off, Any FlexLogic operand

Default: Off

This setting specifies an input which when asserted initiates the open command to the switch. This setpoint is active only when the operand assigned for Local Mode is de-asserted, or Local Mode is set to “Off”.

REMOTE CLOSE

Range: Off, Any FlexLogic operand

Default: Off

This setting specifies an input which when asserted initiates the close command to the switch. This setpoint is active only when the operand assigned for Local Mode is de-asserted, or Local Mode is set to “Off”.

OPEN SEAL-IN

Range: 0.000 to 6000.000 s in steps of 0.001 s

Default: 0.000 s

This setting specifies the seal-in time of the open commands due to an operator initiated manual or remote open command to the disconnect switch.

CLOSE SEAL-IN

Range: 0.000 to 6000.000 s in steps of 0.001 s

Default: 0.000 s

This setting specifies the seal-in time of the open commands due to an operator initiated manual or remote close command to the disconnect switch.

Note:
To maintain the close/open command for a certain time, do so by either using the seal-in timers Open Seal-In and Close Seal-In, or the setpoint "Seal-in" from the output relays, or FlexLogic.

REMOTE BLOCK OPEN

Range: Off, Any FlexLogic operand

Default: Off

The assertion of the operand assigned to this setpoint prevents the disconnect switch from opening.

REMOTE BLOCK CLOSE

Range: Off, Any FlexLogic operand

Default: Off

The assertion of the operand assigned to this setpoint prevents the disconnect switch from closing.

BYPASS REM BLK OPEN

Range: Off, Any FlexLogic operand

Default: Off

This setting specifies the selection of an input which when asserted bypasses the block to the disconnect open control. The Open command is permitted.

BYPASS REM BLK CLOSE

Range: Off, Any FlexLogic operand

Default: Off

This setting specifies the selection of an input which when asserted bypasses the block to the disconnect close control. The Close command is permitted.

EVENTS

Range: Disabled, Enabled

Default: Enabled

TARGETS

Range: Disabled, Self-reset, Latched

Default: Self-reset

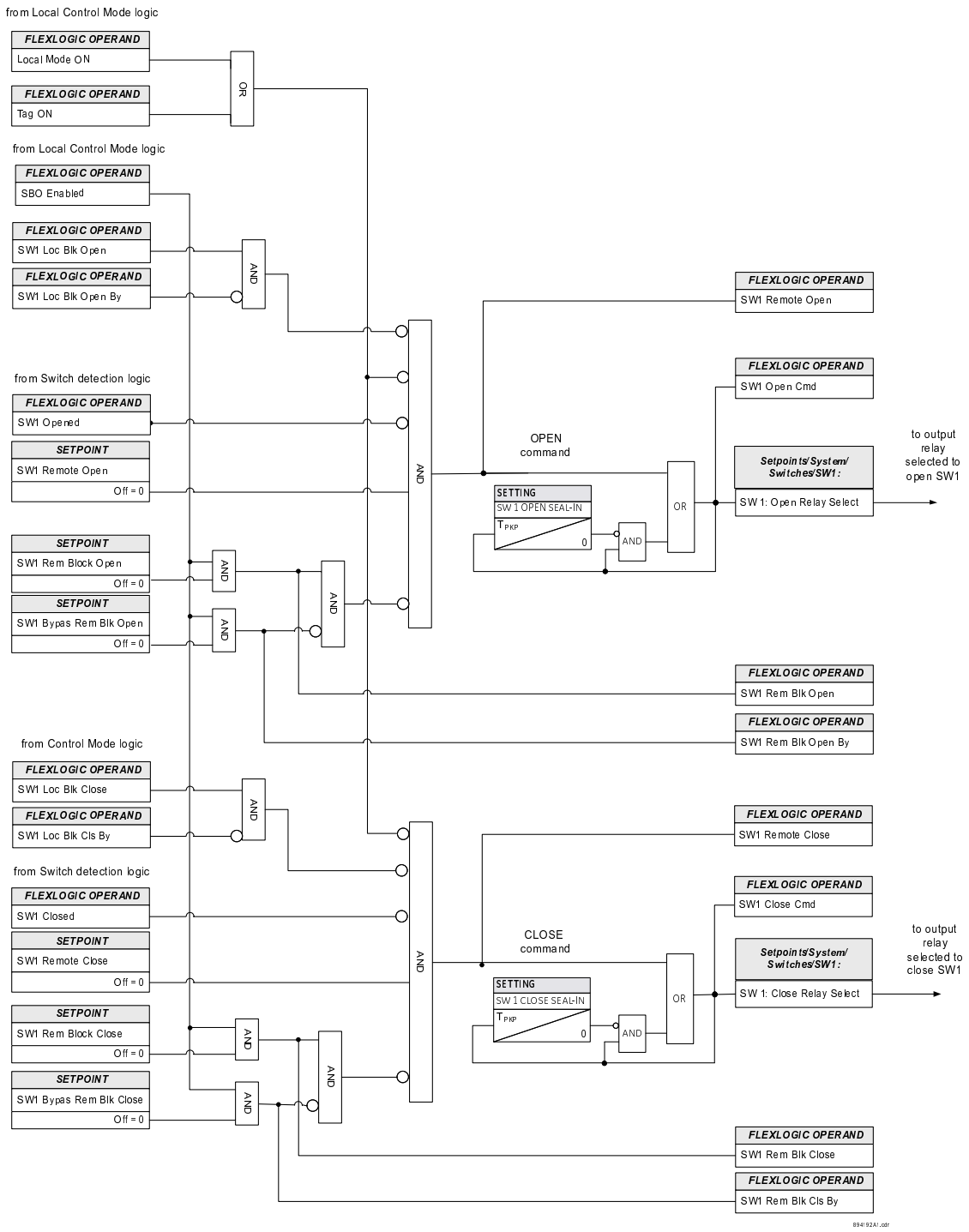

* The logic shows the remote control logic for SW 1. The same logic applies to each switch by programming its individual setpoints for remote control.

Figure 264: Switch Control logic diagram

11.7 POLE DISCORDANCE (52)

The 850-D Distribution Feeder relay provides three Pole Discordance elements under the Control menu. Each element can be used for re-tripping the breaker after pole discordance detection, or tripping an upstream breaker in cases when the pole discordance persists. The element detects if one or two of the breaker poles remain open following a close command, or if one or two of the poles remain closed following an open command. The pole discordance function is based on either information from auxiliary contacts associated with the open/close status of each pole of the breaker, or by detecting the presence of phase currents above/below programmable current limit level upon breaker close or open respectively. To detect pole discordance using phase currents, you must set the ***Current Limit*** setpoint. By monitoring each phase current with respect to the selected Current Limit threshold, the relay detects whether the breaker pole is open or closed. If the phase current is detected below the current limit, the pole will be declared open, and if the current is above that limit, the pole will be declared closed. The pole discordance logic allows either detection of pole discordance externally using:

- Single contact input
- Contact-based detection using 6 input contacts from 52a and 52b auxiliary breaker contacts per-phase
- Current-based detection
- Any combination of the above three detection methods

The pole discordance scheme allows two types of breaker contact wiring:

The following figure shows wiring of the breaker pole discordance signal detected externally. In such schemes the three 52a contacts are parallel and connected in series with the three parallel 52b contacts. If the External Pole Discordance input turns ON, this indicates either one or more 52b contacts did not open after a breaker close command, or one or more 52a contacts remained closed after a breaker trip command.

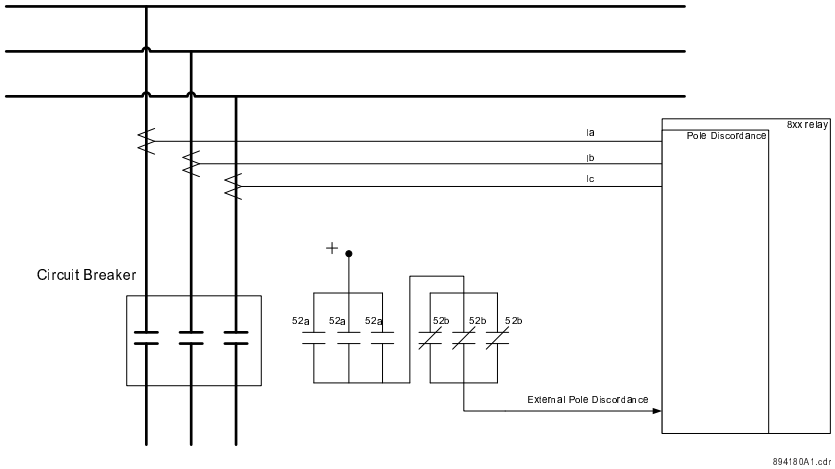

Figure 265: Detecting Pole Discordance externally

The following figure shows the connection of breaker 52a and 52b auxiliary contacts per breaker pole, and their wiring to the relay inputs. This wiring of the breaker contacts to the relay is used when the contact-based method for pole discordance detection is enabled on the relay.

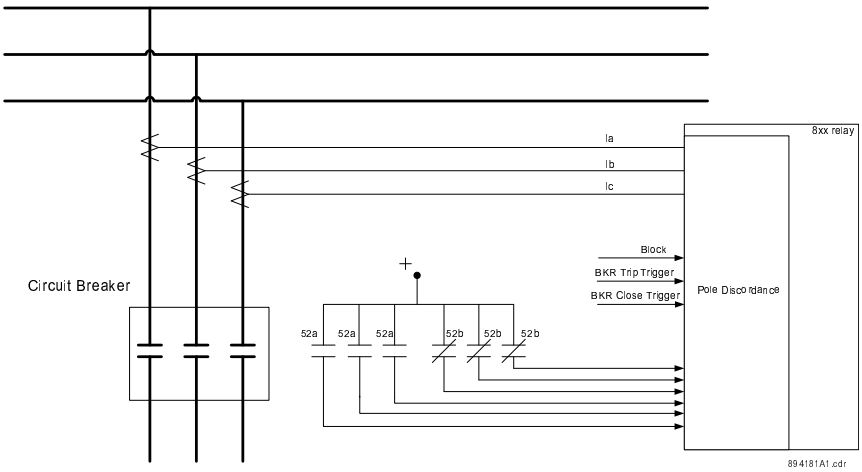

Figure 266: Pole Discordance detected by the relay

Path: ***Setpoints*** > ***Control*** > ***Pole Discordance*** > ***Pole Discordance 1(X)***

FUNCTION

Range: Disabled, Trip, Alarm, Latched Alarm, Configurable

Note: Relays with firmware version 4 and later have a `Latched Trip` *option*

Default: Disabled

BKR TRIP TRIGGER

Range: Off, Any FlexLogic operand

Default: Off

This setting assigns the breaker trip (open) initiation signal.

BKR CLOSE TRIGGER

Range: Off, Any FlexLogic operand

Default: Off

This setting assigns the breaker close initiation signal.

EXTERNAL POLE DISCORDANCE

Range: Off, On, Any FlexLogic operand

Default: Off

This setpoint selects a FlexLogic operand (typically contact input) as an input from pole discordance detected externally by arranging the breaker auxiliary contacts.

PICKUP DELAY

Range: 0.100 to 6000.000 s in steps of 0.001 s

Default: 2.000 s

This setting provides the definite time pickup delay. If, during a breaker open action, all three poles are detected open before the timer expires, the timer resets and no pole discordance is declared. If, however, one or two of the poles remain closed after the timer expires, pole discordance is declared. The same logic applies when a close command is send to the breaker, by monitoring the closed status of the breaker poles.

> *Note:*
> *Even though the minimum Pickup Delay of 100 ms from the range serves most breakers with shorter operating times, make sure to check the breaker operating times, and set the delay to be longer than these times.*

CONTACT BASED DETECTION

Range: Disabled, Enabled

Default: Disabled

Selecting `Enabled` enables the **PH A(B,C) OPEN** and **PH A(B,C) CLOSED** setpoints associated with contact-based PD detection.

PH A(B,C) OPEN

Range: Off, On, Any FlexLogic operand

Default: Off

This setpoint provides selection of the FlexLogic operand per phase (pole) to detect the Open status of the breaker phase (pole). Normally, selection of the contact input wired to the pole auxiliary contact 52b is selected. This setpoint applies only if **CONTACT BASED DETECTION** is enabled.

PH A(B,C) CLOSED

Range: Off, On, Any FlexLogic operand

Default: Off

This setpoint provides selection of FlexLogic operand per phase (pole) to detect the Closed status of this breaker phase (pole). Normally, selection of the contact input wired to the pole auxiliary contact 52a is selected. This setpoint applies only if **CONTACT BASED DETECTION** is enabled.

> *Note:*
> *To get proper functionality when using auxiliary contacts as detection criteria, the primary contacts must be fully synchronized with the auxiliary contacts of the monitored switching element. This means primary contacts and auxiliary contacts need to switch simultaneously!*

CURRENT BASED DETECTION

Range: Disabled, Enabled

Default: Disabled

Selecting `Enabled` enables the setpoint **CURRENT LIMIT**, associated with current-based PD detection.

SIGNAL INPUT

Range: Dependent upon order code

Default: CT Bank 1-J1

This setpoint selects a CT bank for the phase currents associated with the monitored breaker. The phase currents are used only if **CURRENT BASED DETECTION** is enabled.

CURRENT LIMIT

Range: 0.050 to 1.000 x CT in steps of 0.001 x CT

Default: 0.100 x CT

This setting sets the threshold for the measured phase currents per breaker pole, above which the pole is considered closed, and below which the pole is detected open. This setpoint applies only if **CURRENT BASED DETECTION** is set to “Enabled”.

BLOCK

Range: Off, On, Any FlexLogic operand

Default: Off

The Pole Discordance is blocked, when the selected operand is asserted.

> *Note:*
> *Block the Pole Discordance element during single-pole breaker reclosing, as the status of the three breaker poles creates conditions for pole discordance operation.*

OUTPUT RELAY X

Range: Operate, Do Not Operate

Default: Do Not Operate

EVENTS

Range: Disabled, Enabled

Default: Enabled

TARGETS

Range: Disabled, Self-Reset, Latched

Default: Self-Reset

In `Self-Reset` mode, the targets remain active until the function drops out. In `Latched` mode, the target maintains the set state until deactivated by a reset command.

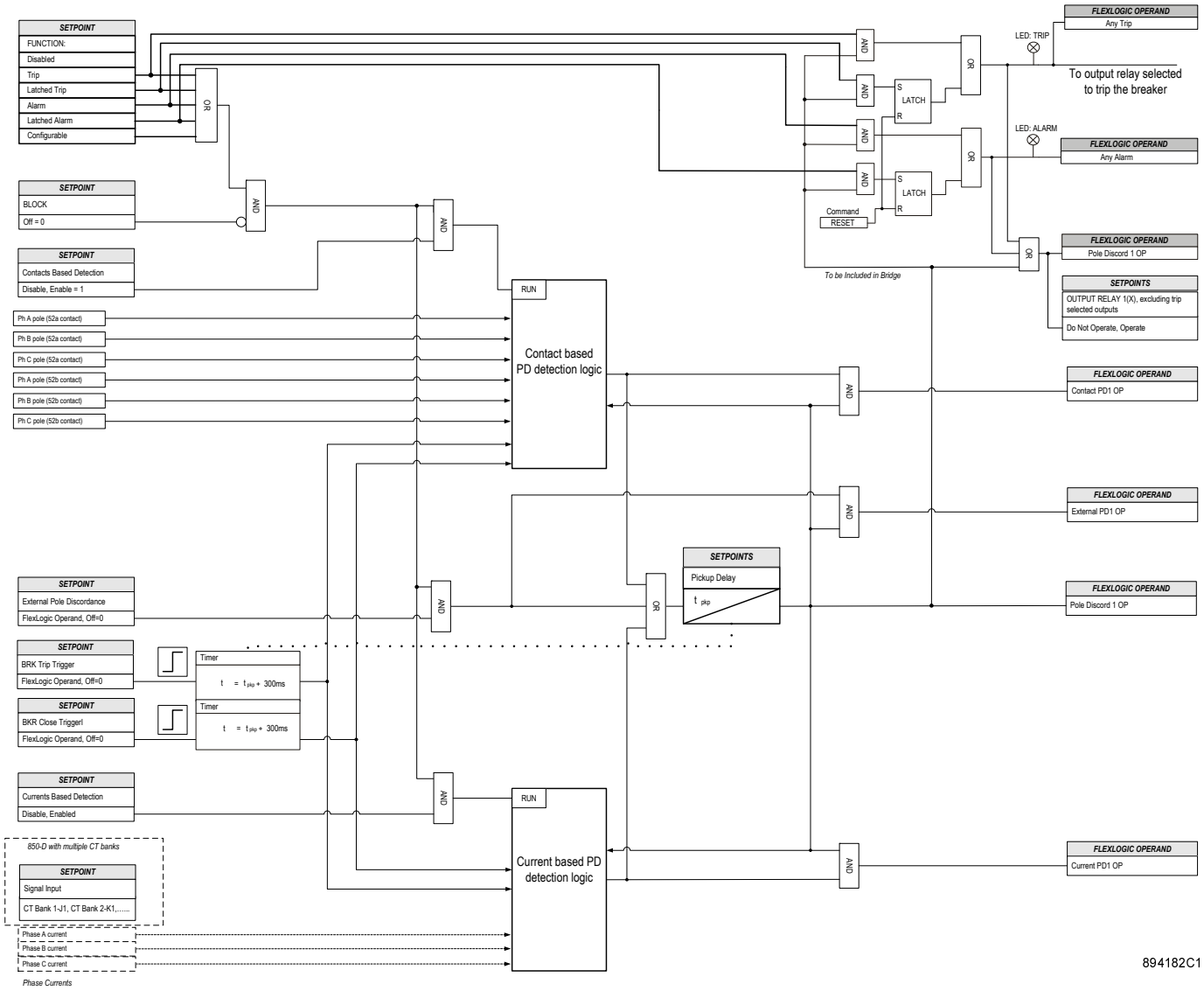

Figure 267: Pole Discordance detection - main logic (A)

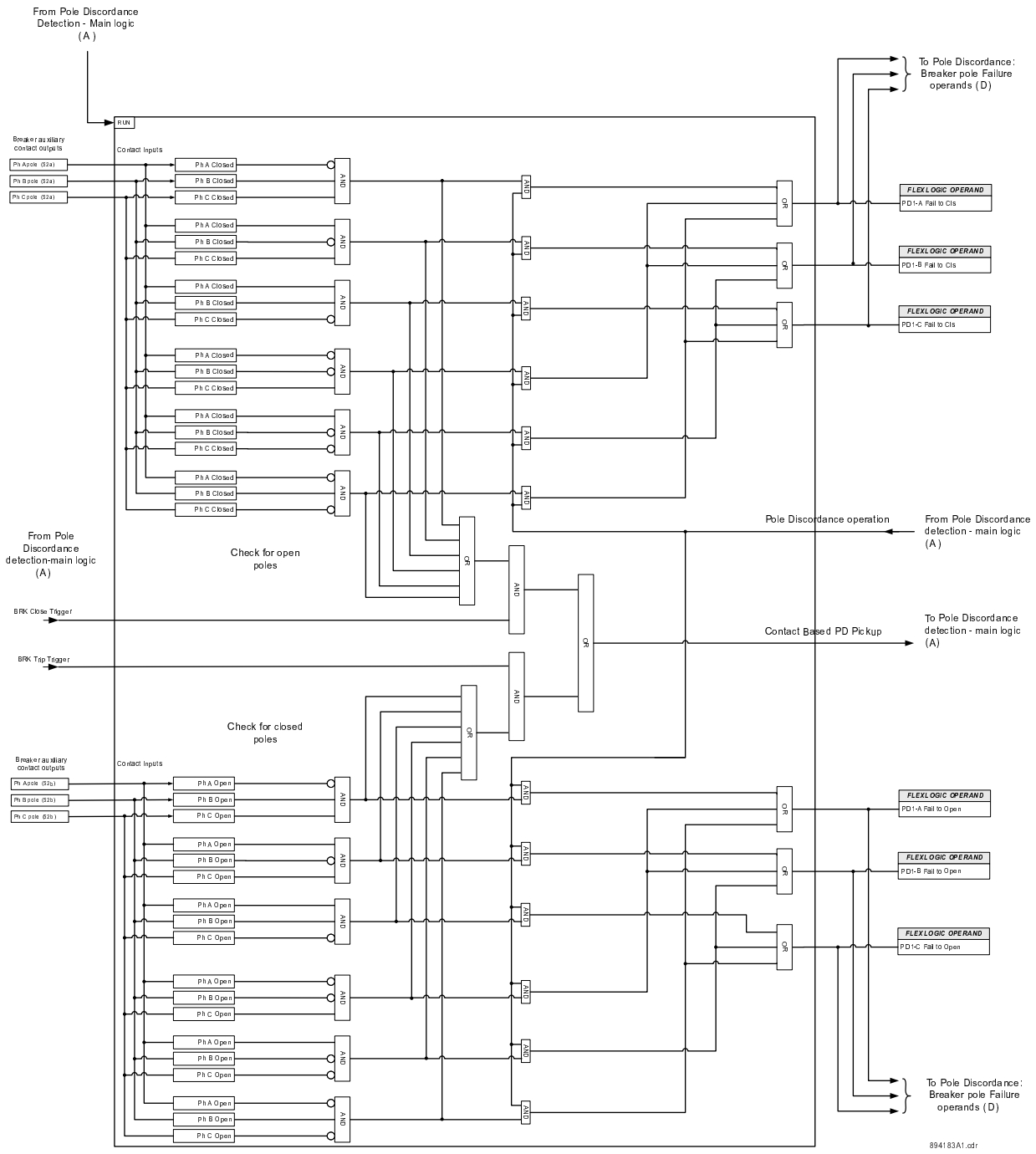

Figure 268: Contact based Pole Discordance detection logic (B)

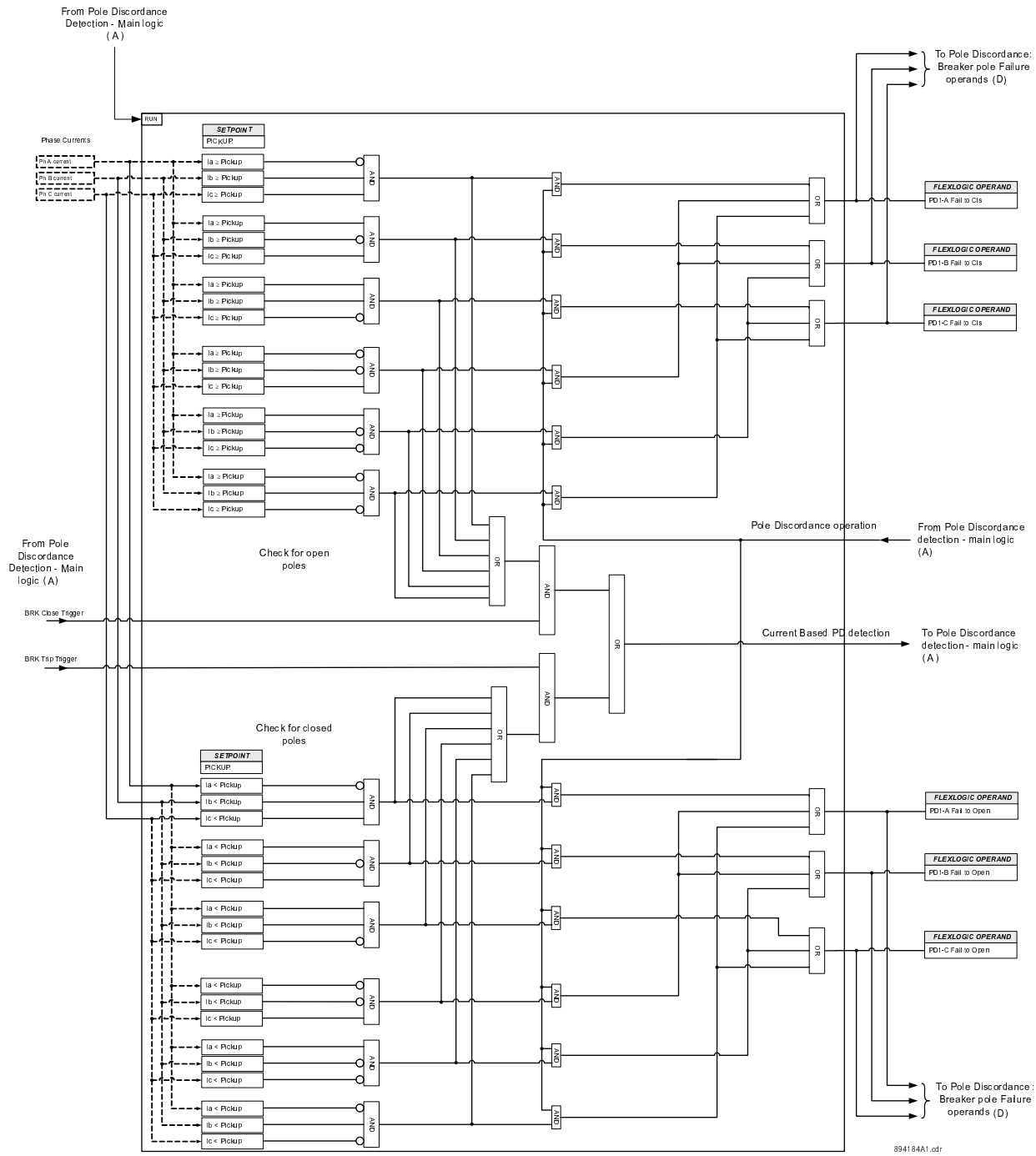

Figure 269: Current based Pole Discordance detection logic (C)

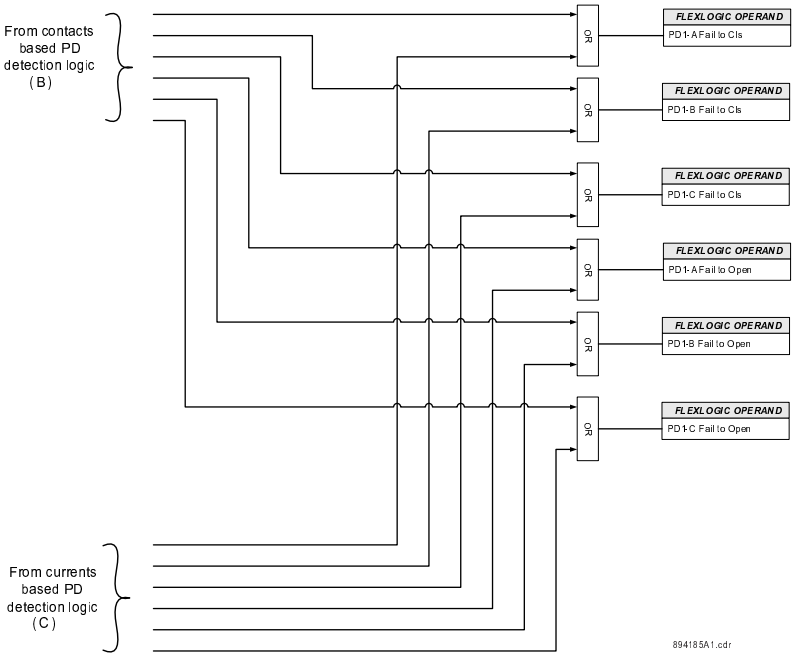

Figure 270: Pole Discordance - Breaker pole failure operands (D)

11.8 VIRTUAL INPUT CONTROL

Path: ***Setpoints*** > ***Control*** > ***Virtual Input Control***

FORCE VIRTUAL INPUT 1 (64)

Range: Off, On

Default: Off

The states of up to 64 Virtual Inputs are changed here. The current or selected status of the Virtual Input is also shown here. The status is a state OFF (logic 0) or ON (logic 1). If the corresponding Virtual Input selected under Setpoints/Inputs/Virtual Inputs is set to `Latched`, the ON command initiated from this menu stays on and the status of this Virtual Input is also on until the OFF command is received. If the Virtual Input type is `Self-Reset`, the command and status of this Virtual Input reverts to OFF after one evaluation of the FlexLogic equations.

11.9 TRIP BUS

> *Note:*
> *Output Relays configured for Recloser operation are under the Trip Close Logic. Setpoints under Trip Bus are not applicable to the output relays set under Trip Close Logic.*

The relay provides six identical Trip Bus elements. The Trip Bus element allows aggregating outputs of protection, control elements, inputs without using FlexLogic and assigning them in a simple and effective manner. Each Trip Bus can be assigned to trip, alarm or the other logic actions. Simple trip conditioning such as latch, delay, and seal-in delay are available.

Path: ***Setpoints*** > ***Control*** > ***Trip Bus 1(X)***

FUNCTION

Range: Disabled, Trip, Alarm, Latched Alarm, Configurable

Note: Relays with firmware version 4 and later have a `Latched Trip` *option*

Default: Disabled

Output relay #1, "Trip", will operate only when the Trip or Latched Trip function is selected and the Trip Bus X operates. If Latched Trip function is selected, the output relay will be ON even after the input conditions are cleared until reset command is issued. The "ALARM" LED will not turn on if the Trip Bus X operates when set to Trip or Latched Trip.

When the Alarm function is selected and the Trip Bus X operates, the "ALARM" LED will flash and will self-reset when the operating conditions are cleared.

When the Latched Alarm function is selected, and the Trip Bus X operates, the "ALARM" LED will flash during the Trip Bus X operating condition, and will be lit steadily after the conditions are cleared. The "ALARM" LED can be cleared by issuing a Reset command.

The output relay #1,"Trip", will not operate if the Latched Alarm or Alarm setting is selected. The Output relay #1 can be configured to operate using the Trip Bus X output operands and the FlexLogic.

When the Configurable function is selected, neither the Trip output, nor the "ALARM" LED will turn on automatically. These must be configured using their own menus and FlexLogic operands.

INPUT 1 to 16

Range: Off, Any FlexLogic operand

Default: Off

These settings select a FlexLogic operand to be assigned as an input to the Trip Bus.

LATCHING

Range: Enabled, Disabled

Default: Disabled

The setting enables or disables latching of the Trip Bus output. This is typically used when lockout is required or user acknowledgement of the relay response is required.

When the NV Latch is enabled using this setting, the PKP operand remains latched after the input trip condition becomes false, and PKP Delay timer continues to run. The Trip Bus operates once the Pickup Delay timer elapses to zero. Both the PKP and OP signals, along with the assigned output relay, will remain latched until the operand configured under the Reset setting becomes true.

It is important to clarify that the NV Latch is distinct from the Trip/Alarm Latched functionality specified under setting Function. The NV Latch holds both PKP and OP signals, including the output relay, whereas Trip/Alarm

Latch is applicable only to output signals, specifically Trip Bus OP and the assigned output relay. The Trip/Alarm Latch resets upon the initiation of the Reset command via the Reset button located on the front panel or through Device\Resetting. However, the NV Latch has a specific resetting input configured under the RESET setting.

If both the Trip/Alarm Latched Function and NV Latching are not required simultaneously, either the Function setting should be configured to Trip/Alarm rather than Latched Trip/Alarm, or NV Latching should be disabled.

RESET

Range: Off, Any FlexLogic operand

Default: Off

The trip bus output is reset when the operand assigned to this setting is asserted.

PICKUP DELAY

Range: 0.000 to 6000.000 s in steps of 0.001 s

Default: 0.000 s

DROPOUT DELAY

Range: 0.000 to 6000.000 s in steps of 0.001 s

Default: 0.000 s

OUTPUT RELAY X

Range: Operate, Do Not Operate

Default: Do Not Operate

BLOCK

Range: Off, Any FlexLogic operand

Default: Off

EVENTS

Range: Enabled, Disabled

Default: Enabled

TARGETS

Range: Self-reset, Latched, Disabled

Default: Self-reset

Note:
The Any Trip operand must not be programmed as an input for the Trip Bus function.

Note:
When Trip Bus is programmed as Latched Trip, multiple resets are required to clear the trip

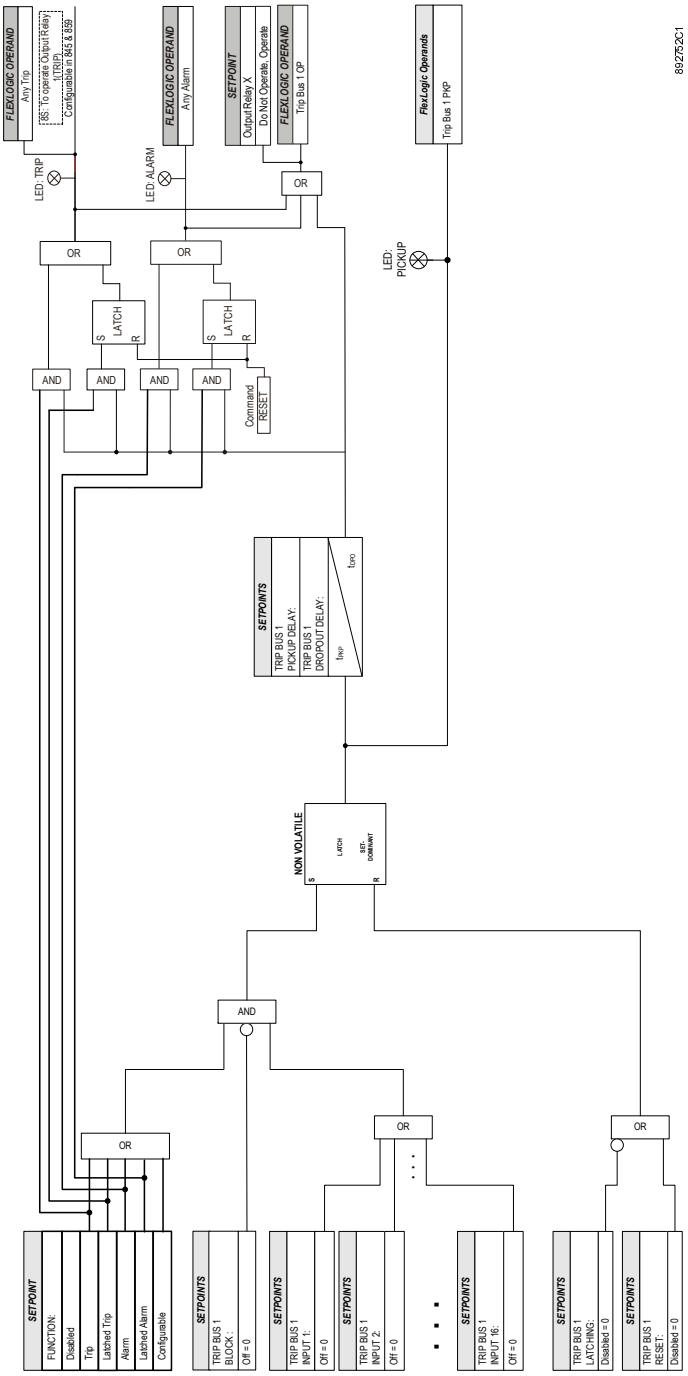

Figure 271: Trip Bus logic diagram

11.10 BREAKER FAILURE (50BF)

The Breaker Failure element determines that a breaker signaled to Trip has not cleared a fault within a definite time. The Breaker Failure scheme must trip all breakers that can supply current to the faulted zone. Operation of a breaker Failure element causes clearing of a larger section of the power system than the initial Trip. Because Breaker Failure can result in tripping a large number of breakers and this can affect system safety and stability, a very high level of security is required.

The Breaker Failure function monitors phase and neutral currents and/or status of the breaker while the protection trip or external initiation command exists. If Breaker Failure is declared, the function operates the selected output relays, forces the autoreclose scheme to lockout and raises FlexLogic operands.

The operation of a Breaker Failure element consists of three stages: initiation, determination of a Breaker Failure condition, and outputs.

Initiation of a Breaker Failure

The protection signals initially sent to the breaker or external initiation (FlexLogic operand that initiates Breaker Failure) initiates the Breaker Failure scheme. The initiating signal should be sealed-in if primary fault detection can reset before the breaker failure timers have finished timing. The seal-in is supervised by current level, so it is reset when the fault is cleared. If required, an incomplete sequence seal-in reset can be implemented by using the initiating operand to initiate a FlexLogic timer, set longer than any breaker failure time, with the output operand selected to block the breaker failure scheme.

When the scheme is initiated, it sends a Trip signal after a pick-up delay, to the breaker initially signaled to Trip (this feature is usually described as re-trip). This reduces the possibility of widespread tripping that can result from a declaration of a failed breaker.

Determination of a Breaker Failure condition

The schemes determine a Breaker Failure condition supervised by one of the following:

- Current supervision only
- Breaker status only
- Both (current and breaker status)

Each type of supervision is equipped with a time delay, after which a failed breaker is declared and Trip signals are sent to all breakers required to clear the zone. The delays are associated with breaker failure timers 1, 2, and 3.

Timer 1 logic is supervised by current level only. If fault current is detected after the delay interval, an output is issued. The continued presence of current indicates that the breaker has failed to interrupt the circuit. This logic detects a breaker that opens mechanically but fails to interrupt fault current.

Timer 2 logic is supervised by both current supervision and breaker status. If the breaker is still closed (as indicated by the auxiliary contact) and fault current is detected after the delay interval, an output is issued.

Timer 3 logic is supervised by a breaker auxiliary contact only. There is no current level check in this logic as it is intended to detect low magnitude faults. External logic may be created to include control switch contact used to indicate that the breaker is in out-of-service mode, disabling this logic when the breaker is out-of-service for maintenance.

Timer 1 and 2 logic provide two levels of current supervision - high-set and low-set - that allow the supervision level to change (for example: from a current which flows before a breaker inserts an opening resistor into the faulted circuit to a lower level after resistor insertion). The high-set detector is enabled after the timeout of timer 1 or 2, along with a timer low-set delay that enables the low-set detector after its delay interval. The delay interval between high-set and low-set is the expected breaker opening time. Both current detectors provide a fast operating time for currents at small multiples of the Pickup value. The overcurrent detectors are required to operate after the Breaker Failure delay interval to eliminate the need for very fast resetting overcurrent detectors.

Outputs

The outputs from the schemes are:

- Re-trip of the protected breaker
- FlexLogic operand that reports on the operation of the portion of the scheme where high-set or low-set current supervision is used
- FlexLogic operand that reports on the operation of the portion of the scheme where 52b status supervision is used only
- FlexLogic operand that initiates tripping required to clear the faulted zone. The Breaker Failure output can be sealed-in for an adjustable period
- Target message indicating a failed breaker has been declared.

11.10.1 BREAKER FAILURE SETUP

Path: ***Setpoints*** > ***Control*** > ***Breaker Failure*** > ***BF1(X)*** > ***BF1(X) Setup***

FUNCTION

Range (3.xx): Disabled, Retrip, Alarm, Latched Alarm, Configurable

Range (4.10): Disabled, Retrip, Latched Retrip, Alarm, Latched Alarm, Configurable

Default: Disabled

When a `Retrip` function is selected and Breaker Failure is initiated (with re-trip current supervision), the output relay Trip operates but the alarm LED does not turn on.

SIGNAL INPUT (not used in 859)

Range: dependent upon the order code

Default: CT Bank 1-J1

USE SEAL-IN

Range: Yes, No

Default: Yes

If set to `Yes`, the element will only be initiated if current flowing through the breaker is above the supervision pickup level.

PH RETRIP SUPERV PICKUP

Range: 0.050 to 30.000 x CT in steps of 0.001 x CT

Default: 1.000 x CT

The setpoint specifies the phase current Retrip level, which when exceeded after Breaker Failure initiation, will re-trip its own breaker. The setting is set to detect the lowest expected fault current on the protected circuit.

NTRL RETRIP SUPERV PICKUP

Range: 0.050 to 30.000 x CT in steps of 0.001 x CT

Default: 1.000 x CT

This setpoint specifies the neutral current Retrip level, which when exceeded after Breaker Failure initiation, will Retrip its own breaker. The setting detects the lowest expected fault current on the protected circuit. Neutral Retrip current supervision is used to provide increased sensitivity.

RETRIP PICKUP DELAY

Range: 00.000 to 6000.000 s in steps of 0.001 s

Default: 0.033 s

This setting specifies a pickup delay for the re-trip command. This delay should be set longer than the possible spurious contact input activation duration due to transients or temporary dc grounds by taking the contact input de-bounce time into account. This will avoid re-trip operation for such transients.

SUPERVISION

Range: Current, 52b & Current, 52b

Default: Current

The setpoint specifies the type of supervision of the Breaker Failure element. There are three options: current only, breaker status only, or both.

BREAKER CLOSED

Range: Off, Any FlexLogic operand

Default: Off

The setpoint selects the FlexLogic operand (auxiliary switch contact) to indicate that the circuit breaker is closed.

T1 PICKUP DELAY

Range: 0.000 to 6000.000 s in steps of 0.001 s

Default: 0.120 s

The setting provides a delay for Timer 1 logic which is supervised with current supervision only. The timer is set to the expected opening time of the circuit breaker, plus a safety margin intended to overcome the relay measurement and timing errors as well as relay processing time and current supervision reset time. In a microprocessor relay this time is not significant. The current magnitude ramps-down to zero in ¾ of a power cycle after the current is interrupted.

> *Note:*
> *In bulk oil circuit breakers, the interrupting time for currents less than 25% of the interrupting rating can be significantly longer than the normal interrupting time.*

T2 PICKUP DELAY

Range: 0.000 to 6000.000 s in steps of 0.001 s

Default: 0.120 s

The setting provides a delay for Timer 2 logic which is supervised with current supervision and breaker status (52b indication). The timer is set to the expected opening time of the circuit breaker, plus a safety margin intended to overcome the relay measurement and timing errors, relay processing time, current supervision reset time, and the time required for the breaker auxiliary contact to open.

T3 PICKUP DELAY

Range: 0.000 to 6000.000 s in steps of 0.001 s

Default: 0.120 s

The setting provides a delay for Timer 3 logic which is supervised with breaker status only (52b indication). The timer is set to the expected opening time of the circuit breaker, plus a safety margin intended to overcome the relay timing errors, and the time required for the breaker auxiliary contact to open.

PHASE HIGHSET PICKUP

Range: 0.050 to 30.000 x CT in steps of 0.001 x CT

Default: 1.000 x CT

The setpoint specifies the phase current output supervision level. The setting detects the lowest expected fault current on the protected circuit.

NEUTRAL HIGHSET PICKUP

Range: 0.050 to 30.000 x CT in steps of 0.001 x CT

Default: 1.000 x CT

The setpoint specifies the neutral current output supervision level. The setting detects the lowest expected fault current on the protected circuit. Neutral current supervision is used to provide increased sensitivity.

LOWSET DELAY

Range: 0.000 to 6000.000 s in steps of 0.001 s

Default: 0.000 s

The setting provides the lowest current supervision Pickup. The setting is used in applications where a change in supervision current level is required (for example: breakers with opening resistors).

The lowest delay (interval between high-set and low-set) is the expected breaker opening time.

PHASE LOWSET PICKUP

Range: 0.050 to 30.000 x CT in steps of 0.001 x CT

Default: 1.000 x CT

The setpoint specifies the phase current output supervision level. The setting detects the lowest expected fault current on the protected circuit where significant change in current level is expected (for example: breakers with opening resistors).

NEUTRAL LOWSET PICKUP

Range: 0.050 to 30.000 x CT in steps of 0.001 x CT

Default: 1.000 x CT

The setpoint specifies the neutral current output supervision level. The setting detects the lowest expected fault current on the protected circuit where significant change in current level is expected (for example: breakers with opening resistors). Neutral current supervision is used to provide increased sensitivity.

DROPOUT DELAY

Range: 0.000 to 6000.000 s in steps of 0.001 s

Default: 0.100 s

The setting is used to set the period of time for which the Breaker Fail output is sealed-in. This timer must be coordinated with the automatic reclosing scheme of the failed breaker, to which the Breaker Failure element sends a cancel reclosure signal. Reclosure of a remote breaker can also be prevented by holding a transfer Trip signal on for longer than the reclaim time.

BLOCK

Range: Off, Any FlexLogic operand

Default: Off

OUTPUT RELAY X

Range: Operate, Do Not Operate

Default: Do Not Operate

EVENTS

Range: Disabled, Enabled

Default: Enabled

TARGETS

Range: Disabled, Self-reset, Latched

Default: Self-reset

11.10.2 INITIATE

Path: ***Setpoints*** > ***Control*** > ***Breaker Failure 1(X)*** > ***BF1(X) Initiate***

EXTERNAL INITIATE

Range: Off, Any FlexLogic operand

Default: Off

The setpoint selects the FlexLogic operand that initiates the Breaker Failure scheme; typically the trip signals from external devices.

> *Note:*
> *The trip signals from internal protection functions may be used with the help of FlexLogic, but for easier setting the Breaker Failure function is provided with a BF1 INITIATE submenu.*

INITIATE IN1(15)

Range: Off, Any FlexLogic operand

Default: Ph TOC 1 OP

The setpoint selects the FlexLogic operand that initiates the Breaker Failure scheme; typically the trip signals from internal protection functions.

Logic diagram

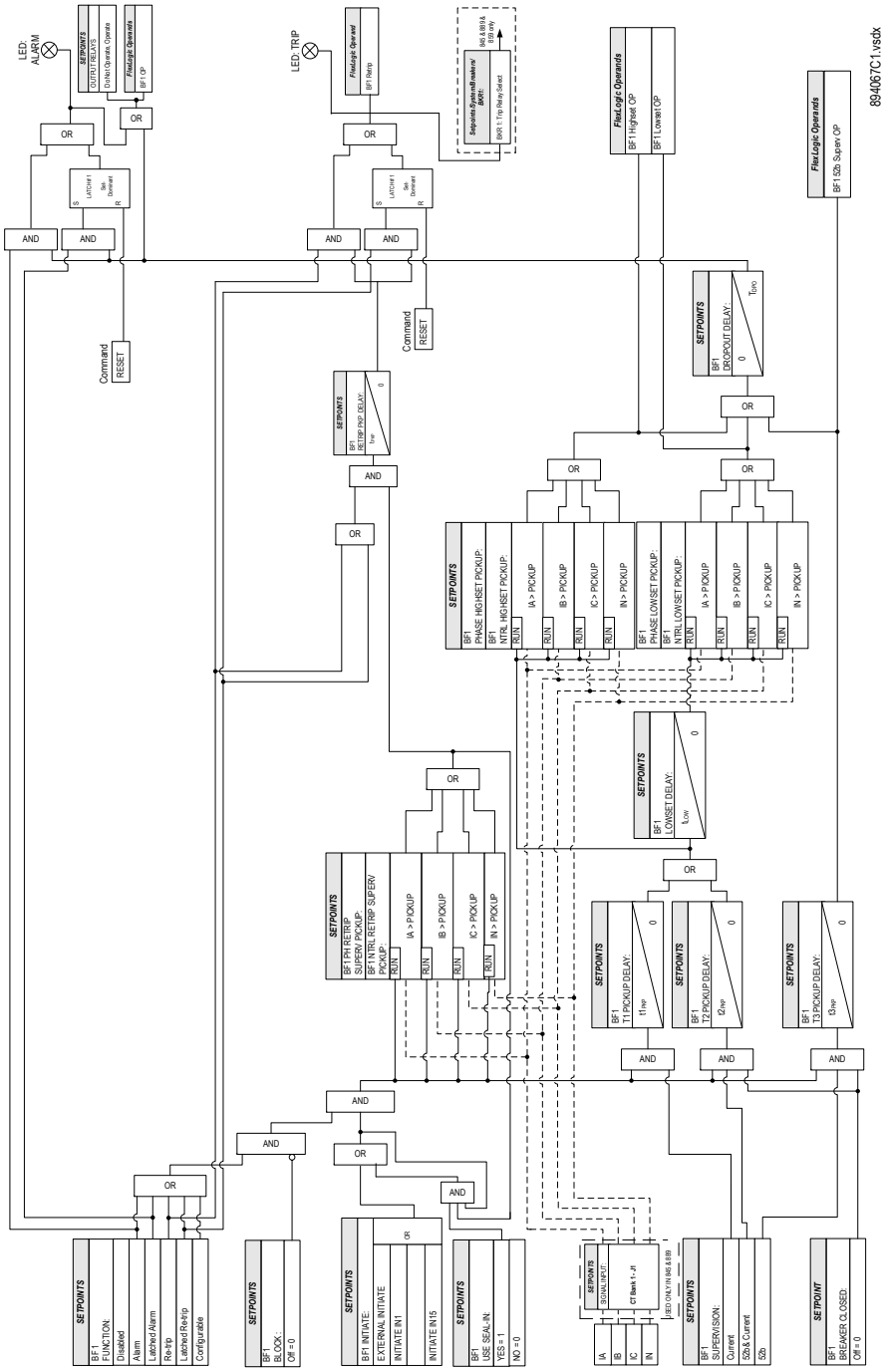

Figure 272: Breaker Failure logic diagram

11.11 ARC FLASH PROTECTION

The Arc Flash Protection module supports fast and secure protection against an arc flash event for a safe working environment. The relay provides two Arc Flash protection elements (AF1 and AF2). Each element can utilize up to four arc flash sensor inputs. The relay supports two different arc flash sensor types, point and loop. Arc Flash protection uses up to eight light detection fiber sensors and a dedicated high-speed instantaneous overcurrent element with secure Finite Response Filtering.

Light from the light sensor AND logic with high-speed overcurrent ensures fast and secure operation. Further enhancement includes continuous monitoring of individual light sensors with self-test trouble indication. Eight Arc Flash elements with self-test from the individual light sensors can be used to design flexible Arc Flash protection schemes for different configurations depending upon the physical locations of the sensors. Each individual element can also provide a higher level of redundancy/reliability of the system.

In case any issues with the sensors are detected (i.e. failure of a self-test), the corresponding light sensor trouble operand (Light Sensor # Trouble) is asserted. Very fast detection of the Arc flash light event is also possible using Light as the only detection parameter for alarm purposes. In addition, customized logic can be designed using individual AF1 Light # PKP and Arc Flash 1 S# OP operands from different light sensors in the FlexLogic engine.

> *Note:*
> *When using arc flash protection, the critical failure relay must be connected to annunciate the status of the device.*

Path:***Setpoints*** > ***Control*** > ***Arc Flash*** > ***Arc Flash 1***

FUNCTION

Range: Disabled, Trip, Alarm, Latched Alarm, Configurable

Note: Relays with firmware version 4 and later have a `Latched Trip` *option*

Default: Disabled

The selection of Trip, Alarm, Latched Alarm or Configurable setting enables the HS Phase/Ground IOC function.

SIGNAL INPUT

Range: dependent upon the order code

Default: CT Bank 1 - J1

This setting provides the selections for the current input bank. The default bank names can be changed in: ***Setpoints*** > ***System*** > ***Current Sensing*** > ***[Name]*** > ***CT Bank Name***.

HS PHASE PKP

Range: 0.050 to 30.000 x CT in steps of 0.001 x CT

Default: 2.000 x CT

HS GROUND PKP

Range: 0.050 to 30.000 x CT in steps of 0.001 x CT

Default: 1.000 x CT

> *Note:*
> *The value of HS Gnd PICKUP can be set to a very high value, when only the HS Phs element needs to be applied for Arc Flash detection.*

Note:
The HS Ground PKP setting is not available if the order code is selected to have just one sensitive ground current input on the J1-Bank (4-0B in the order code).

LIGHT SENSOR 1(4)

Range: Disabled, Enabled

Default: Disabled

Light Sensor 1 (4) is the setting used to enable/disable a specific light sensor. It is important to disable each unused light sensors, even if nothing is connected to it. If not, the Light Sensor 1 (8) Trouble operands and Light Sensor Trouble operand will engage for the unused sensors..

Note:
No light settings are needed due to the automatic threshold capabilities included in the relay, described in the next section.

SEAL-IN TIME

Range: 0.00 to 10.00 s in steps of 0.01 s

Default: 0.00 s

This setting specifies length of time to extend the Arc Flash S1(4) OP and Arc Flash OP operands by a time beyond which any of the light sensors AND any of the HS current elements are picked up. The recommended time is the expected breaker operating time plus some margin, typically 30%.

Note:
The Arc Flash OP operand is typically much shorter than the actual breaker operating time; hence there is a risk that the relay trip contact could attempt to open the DC trip circuit long before the breaker auxiliary contacts open the DC trip circuit, which could damage the relay trip contact. Hence the need for this seal-in delay: during an actual arc flash event, the light pulse can be as short as 20msec. The arc flash logic of the relay extends the arc flashlight operands by 20msec of a cycle for added dependability, however this is still much shorter than the expected breaker operating time. With the Seal-in Time setting, the Arc Flash OP operand can be coordinated with expected HS current operating time, which is very similar to the breaker trip time.

BLOCK

Range: Off, Any FlexLogic operand

Default: Off

OUTPUT RELAY X

Range: Operate, Do Not Operate

Default: Do Not Operate

EVENTS

Range: Disabled, Enabled

Default: Enabled

This setting enables or disables the events of the Arc Flash function.

TARGETS

Range: Self-reset, Latched, Disabled

Default: Latched

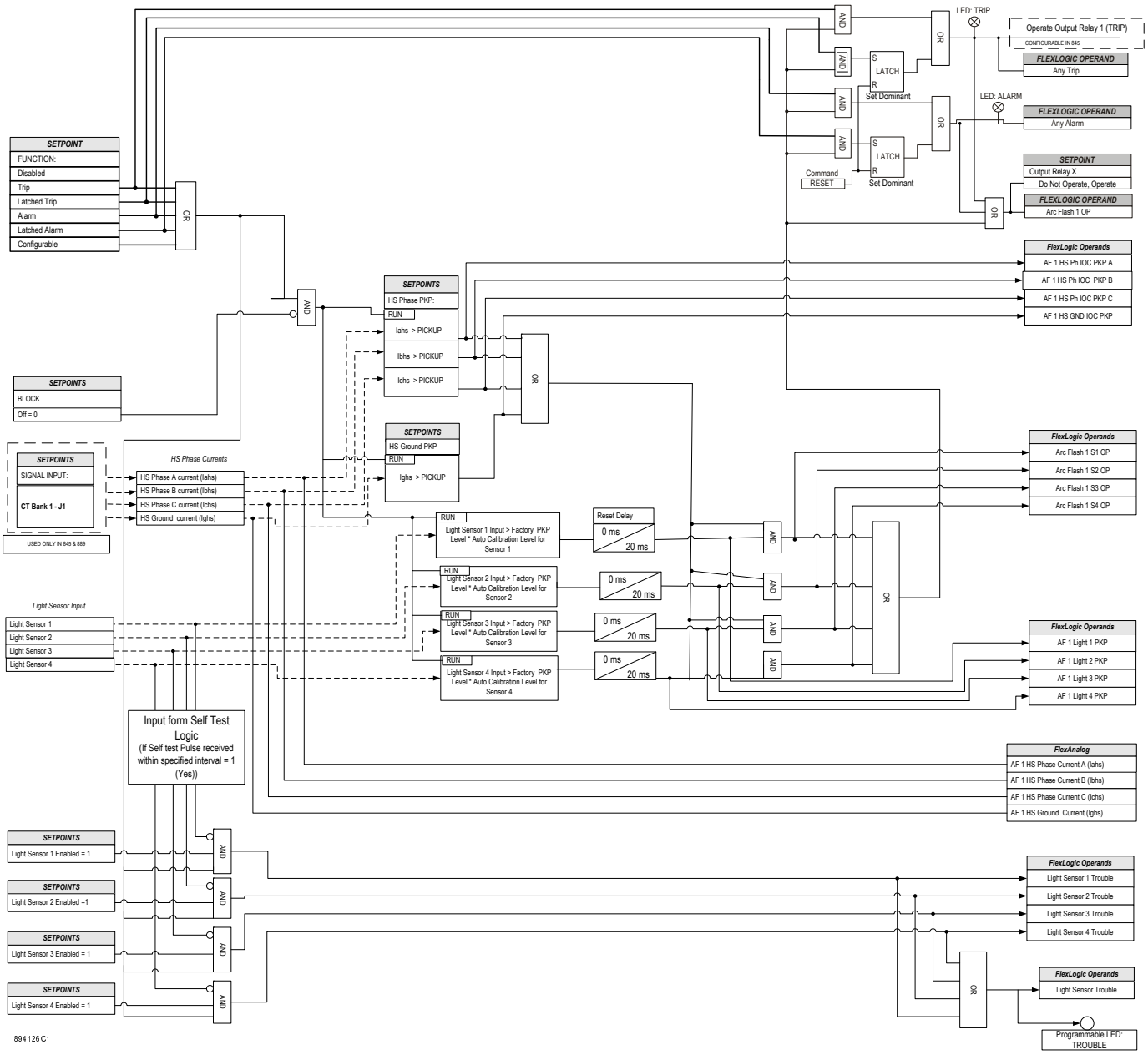

Figure 273: Arc Flash logic diagram

11.12 SYNCHROCHECK (25)

The synchronism check (Synchrocheck) function is intended for supervising the paralleling of two parts of a system which are to be joined by the closure of a circuit breaker. The Synchrocheck elements are typically used at locations where the two parts of the system are interconnected.

If a breaker can be a paralleling point between two generation sources, it is common practice to automatically perform a check to ensure the sources are within allowable voltage limits before permitting closing of the breaker. Synchrocheck provides this feature by checking that the bus and line input voltages are within the programmed differentials of voltage magnitude, phase angle position, and frequency. If this feature is enabled, the check will be performed before either manual close or automatic reclose signals can operate the Close Output Relay. The Synchrocheck programming can allow permitted closing if either or both of the sources are de-energized.

Synchrocheck verifies that the voltages (BUS and LINE) on the two sides of the supervised circuit breaker are within set limits of magnitude, angle and frequency difference. The time during which the two voltages remain within the admissible angle difference is determined by the setting of the phase angle difference ΔΦ (without angle compensation) and the frequency difference ΔF (slip frequency). It can be defined as the time it would take the voltage phasor, BUS or LINE, to traverse an angle equal to 2 × ΔΦ at a frequency equal to the frequency difference ΔF. This time can be calculated by:

$$T = \frac{1}{\frac{360°}{2 \times \Delta\Phi} \times \Delta F}$$

where:

- ΔΦ = phase angle difference in degrees
- ΔF = frequency difference in Hz.

Example: For the values ofΔΦ = 30° and ΔF = 0.1 Hz, the time during which the angle between the two voltages is less than the set value is:

$$T = \frac{1}{\frac{360}{2 \times 30} \times 0.1} = 1.66\,\text{sec}$$

As a result the breaker closing time must be less than this computed time, to successfully close and connect both energized sides.

If one or both sides of the synchronizing breaker are de-energized, the Synchrocheck programming can allow for closing of the circuit breaker using undervoltage control to by-pass the Synchrocheck measurements (dead source function).

The measured bus and line input voltage magnitudes, angles and frequencies, and calculated differential values of angle magnitude and frequency are available as actual values under ***Metering*** > ***Synchrocheck 1***.

The selection of `Aux VT Connection` under ***Setpoints*** > ***System*** > ***Voltage Sensing*** determines the voltage used for Synchrocheck as derived from the three-phase voltages available on the relay. For example, if the Aux VT Connection is selected as Vab, and the three-phase VTs are connected in Wye configuration, the relay computes delta voltage Vab as well, and uses it for Synchrocheck.

> *Note:*
> *The Synchrocheck cannot be performed if the three-phase VTs are Delta connected, and the Wye single voltage input is selected under **Aux VT connection**. Wye voltages cannot be calculated from Delta connected VTs.*

Note:
If both Line and Bus sides are three-phase VTs, the VT types must match, i.e. either both Line and Bus Volt inputs are Delta or both are Wye. If both sides are single-phase Aux VT inputs, then both Aux VT connection types must match, i.e. if the Line side Aux VT type is Vab, then the Bus side Aux VT type must be Vab. Aux VT connection Vn is not a valid type for synchrocheck.

Caution:
If the VT types on the Line and Bus side do not match, as specified above, the Synchrocheck does not run even when the Function is set to Enabled.

Note:
*Once the Synchrocheck function is programmed, it will perform a voltage input selection check, to determine that the voltage magnitudes are not different by more than 5%. This check depends only on the settings entered for phase and auxiliary VTs under **Setpoints** > **System** > **Voltage Sensing**. If the difference between the selected voltage inputs by calculation is bigger than 5%, the Synchrocheck will not work. For example, the phase VT can be set to Wye connection with secondary voltage of 66.4V. The Aux. VT can be connected between phase A to B with the secondary voltage set to 115V. Then, one of the Synchrocheck inputs can be set as the Wye connected phase voltage bank, and the other input can be the Aux. VT with voltage V_{ab}. Since the difference between the computed V_{ab} input and the Aux. VT setting is 0%, the Synchrocheck will work. However, if this difference is bigger than 5%, the Synchrocheck will not work.*

Path: ***Setpoints*** > ***Control*** > ***Synchrocheck 1(X)***

FUNCTION

Range: Disabled, Enabled

Default: Disabled

BUS VOLTS INPUT

Range: dependent upon the order code

Default: J2-3VT

The setting provides selection of the Bus Volts input; either three-phase voltages from the three-phase VTs connected to the relay, or a single voltage from the Auxiliary VT also connected to the relay Aux VT input. The setup of these VTs is outlined under ***Setpoints*** > ***System*** > ***Voltage Sensing***.

LINE VOLTS INPUT

Range: dependent upon the order code

Default: J2-Vx

The setting provides selection of the Line Volts input; either three-phase voltages from the three-phase VTs connected to the relay, or a single voltage from the Auxiliary VT also connected to the relay Aux VT input. The setup of these VTs is outlined under ***Setpoints*** > ***System*** > ***Voltage Sensing***.

MAX FREQ DIFFERENCE

Range: 0.01 to 5.00 Hz in steps of 0.01 Hz

Default: 0.20 Hz

The setting selects the maximum frequency difference in ‘Hz’ between the two sources. A frequency difference between the two input voltage systems below this value is within the permissible limit for synchronism.

MAX ANGLE DIFFERENCE

Range: 1 to 100° in steps of 1°

Default: 20°

The setpoint selects the maximum angular difference in degrees between the two sources. An angular difference between the two input voltage phasors below this value is within the permissible limit for synchronism.

MAX VOLT DIFFERENCE

Range: 10 to 600000 V in steps of 1 V

Default: 2000 V

The setpoint selects the maximum primary voltage difference in volts between the two sources. A primary voltage magnitude difference between the two input voltages below this value is within the permissible limit for synchronism.

MAX FREQ HYSTERESIS

Range: 0.01 to 0.10 Hz in steps of 0.01 Hz

Default: 0.05 Hz

The setpoint specifies the required hysteresis for the maximum frequency difference condition. The condition becomes satisfied when the frequency difference becomes lower than SYNC1 MAX FREQ DIFFERENCE. Once the Synchrocheck element has operated, the frequency difference must increase above the SYNC1 MAX FREQ DIFFERENCE + SYNC1 MAX FREQ HYSTERESIS sum to drop out (assuming the other two conditions, voltage and angle, remain satisfied).

DEAD SOURCE PERM

Range: Disabled, LB & DL, DB & LL, DB & DL, DB OR DL, DB XOR DL

Default: Disabled

The setpoint selects the combination of dead and live sources that bypass the synchronism check function and permit the breaker to be closed when one or both of the two voltages (Bus Voltage or/and Line Voltage) are below the maximum voltage threshold. A dead or live source is declared by monitoring the voltage level. Six options are available.

The voltage levels that determine whether a source is dead or live are configurable in the four setpoints following this one.

The DEAD SOURCE PERMISSION range is as follows:

- `Disabled`: Dead source permissive is disabled.
- `LB & DL`: Live Bus AND Dead Line.“DB & LL”: Dead Bus AND Live Line.
- `DB & DL`: Dead Bus AND Dead Line.
- `DB OR DL`: Dead Bus OR Dead Line.
- `DB XOR DL`: Dead Bus XOR Dead Line (one source is Dead and one is Live).

> *Note:*
> *For an application where the breaker is located on radial feeders, or line is powered by one source only, the DEAD SOURCE PERM setpoint shall not be disabled.*

LIVE BUS VOLTS MIN

Range: 0.00 to 1.50 x VT in steps of 0.01 x VT

Default: 0.80 x VT

The setpoint establishes a minimum voltage magnitude for the Bus Voltage. Above this magnitude, the Bus Voltage input used for Synchrocheck is considered “Live” or energized.

LIVE LINE VOLTS MIN

Range: 0.00 to 1.50 x VT in steps of 0.01 x VT

Default: 0.80 x VT

The setpoint establishes a minimum voltage magnitude for the Line Voltage. Above this magnitude, the Line Voltage input used for Synchrocheck is considered “Live” or energized.

DEAD BUS VOLTS MAX

Range: 0.00 to 1.50 x VT in steps of 0.01 x VT

Default: 0.20 x VT

The setpoint establishes a maximum voltage magnitude for the Bus Voltage. Below this magnitude, the Bus Voltage input used for Synchrocheck is considered “Dead” or de-energized.

DEAD LINE VOLTS MAX

Range: 0.00 to 1.50 x VT in steps of 0.01 x VT

Default: 0.20 x VT

This setpoint establishes a maximum voltage magnitude for the Line Voltage. Below this magnitude, the Line Voltage input used for Synchrocheck is be considered “Dead” or de-energized.

SYNCCHECK BYPASS

Range: Off, Any FlexLogic operand

Default: Off

The Synchrocheck is bypassed when the selected operand is asserted. Typically BKR(X) Disconnected is used to bypass Synchrocheck.

BLOCK

Range: Off, Any FlexLogic operand

Default: Off

The Synchrocheck is blocked when the selected operand is asserted. Typically 52a (the circuit breaker closed) contact is used to block Synchrocheck (Synchrocheck is needed only when the circuit breaker is open). Synchrocheck can be also blocked when the relay is tripping.

OUTPUT RELAY X

Range: Operate, Do Not Operate

Default: Do Not Operate

EVENTS

Range: Enabled, Disabled

Default: Enabled

TARGETS

Range: Disabled, Self-reset, Latched

Default: Self-reset

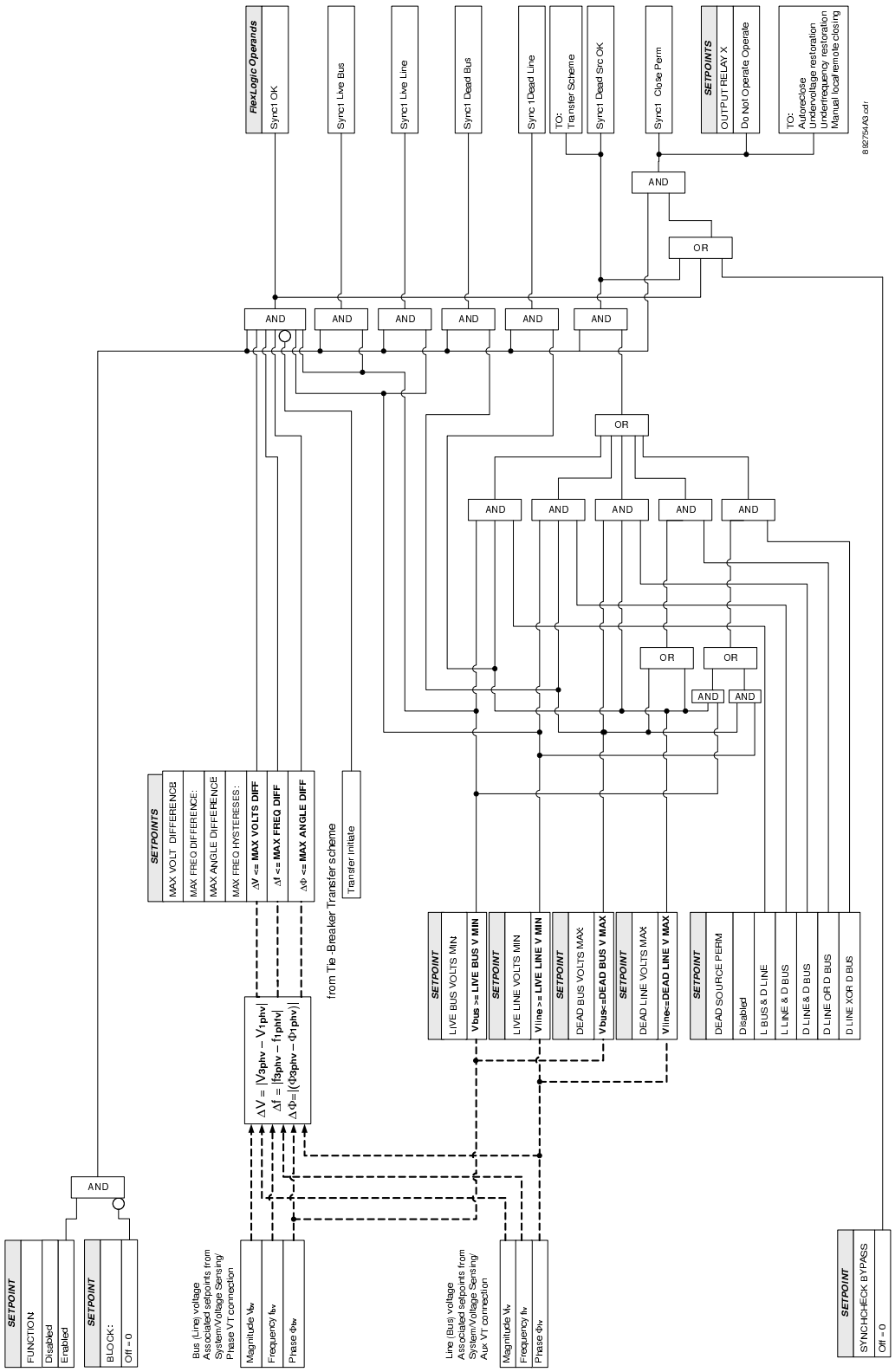

Figure 274: Synchrocheck logic diagram

11.13 MANUAL CLOSE BLOCKING

When a manual circuit breaker close is initiated, the relay can be configured to:

- Block instantaneous overcurrent elements
- Raise the Pickup level of time overcurrent elements
- Change the setpoint group.

This prevents optimally set overcurrent elements from operating on startup to inrush currents.

Path: ***Setpoints*** > ***Control*** > ***Manual Close Blocking BKR 1(X)***

FUNCTION

Range: Disabled, Latched Alarm, Alarm, Configurable

Default: Disabled

MANUAL CLS BLOCK INTERVAL

Range: 0.000 to 6000.000 s - in steps of 0.001 s

Default: 5.000 s

The setting provides a time interval during which the Manual Close Blocking is active and rise TOC Pickups, block IOC elements, or selecting setting group.

BLOCK PHASE IOC 1 (2, 3, 4)

Range: Off, On

Default: Off

If On, the operation of the PHASE IOC 1/2 protection element is blocked after the Manual Close Blocking condition is detected.

BLOCK NEUTRAL IOC 1 (2, 3, 4)

Range: Off, On

Default: Off

If On, the operation of the NEUTRAL IOC 1/2 protection element is blocked after the Manual Close Blocking condition is detected.

BLOCK GROUND IOC 1 (2, 3, 4)

Range: Off, On

Default: Off

If On, the operation of the GROUND IOC 1 protection element is blocked after the Manual Close Blocking condition is detected.

BLOCK SENS GROUND IOC 1 (2, 3, 4)

Range: Off, On

Default: Off

If On, the operation of the SENSITIVE GROUND IOC 1 protection element is blocked after the Manual Close Blocking condition is detected.

BLOCK NEG SEQUENCE IOC 1 (2, 3, 4)

Range: Off, On

Default: Off

If On, the operation of the NEGATIVE SEQUENCE IOC 1 protection element is blocked after the Manual Close Blocking condition is detected.

RAISE PHASE TOC 1 (2, 3, 4) PKP

Range: 1 to 100% in steps of 1%

Default: 0

The setpoint determines the characteristics of the PHASE TOC 1/2 protection element by raising the Pickup level.

RAISE NEUTRAL TOC 1 (2, 3, 4) PKP

Range: 1 to 100% in steps of 1%

Default: 0

The setpoint determines the characteristics of the NEUTRAL TOC 1/2 protection element by raising the Pickup level.

RAISE GROUND TOC 1 (2, 3, 4) PKP

Range: 1 to 100% in steps of 1%

Default: 0

The setpoint determines the characteristics of the GROUND TOC 1 protection element by raising the Pickup level.

RAISE SENS GND TOC 1/2 PKP

Range: 1 to 100% in steps of 1%

Default: 0

The setpoint determines the characteristics of the SENSITIVE GROUND TOC 1 protection element by raising the Pickup level.

RAISE NEG SEQ TOC 1/2 PKP

Range: 1 to 100% in steps of 1%

Default: 0

The setpoint determines the characteristics of the NEGATIVE SEQUENCE TOC 1 protection element by raising the Pickup level.

SELECT SETPOINT GROUP

Range: Active, Group 1,2,3,4,5,6

Default: Active

The setpoint determines the setpoint group that is used after the Manual Close Blocking condition is detected.

OUTPUT RELAY X

Range: Operate, Do Not Operate

Default: Do Not Operate

EVENTS

Range: Enabled, Disabled

Default: Enabled

TARGETS

Range: Disabled, Self-reset, Latched

Default: Self-reset

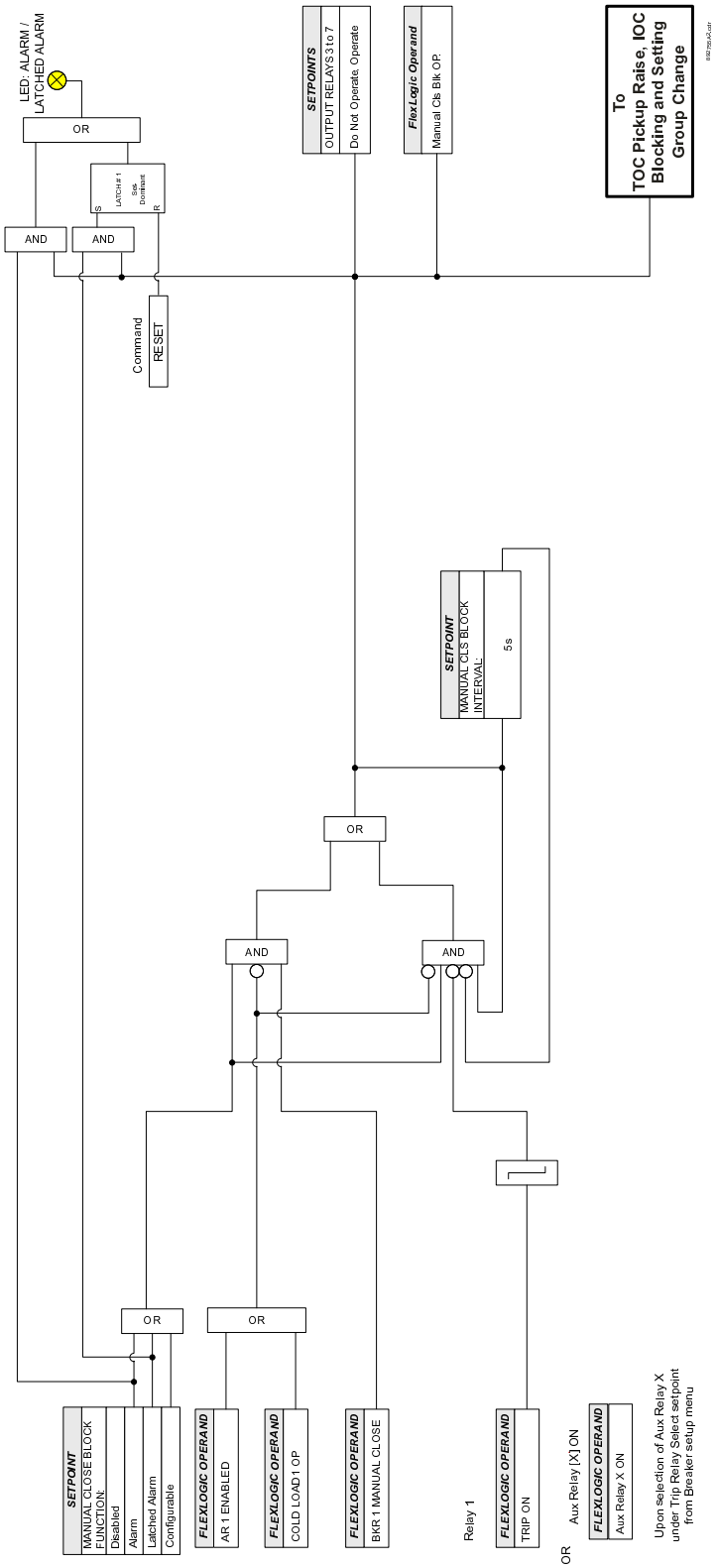

Figure 275: Manual Close Blocking logic diagram

11.14 COLD LOAD PICKUP

When a *Cold Load Pickup* condition (CLP) is detected, the relay can be configured to:

- Block instantaneous overcurrent elements
- Raise the Pickup level of time overcurrent elements
- Change the setpoint group.

Under normal operating conditions, the actual load on a feeder is less than the maximum connected load, since not all consumers require maximum load at the same time. A Cold Load condition can be caused by a prolonged outage of the load, by opening of the circuit breaker, or by a loss of supply even if the breaker remains closed. Upon the return of the source, the circuit experiences inrush current into connected transformers, accelerating currents into motors, and simultaneous demand from many other loads because the normal load diversity has been lost. During the Cold Load condition, the current level can be above the Pickup setting of some protection elements, so the feature can be used to prevent the tripping that would otherwise be caused by the normal settings.

Without historical data on a particular feeder, some utilities assume an initial Cold Load current of about 500% of normal load, decaying to 300% after 1 second, 200% after 2 seconds, and 150% after 3 seconds. See the following figure for details.

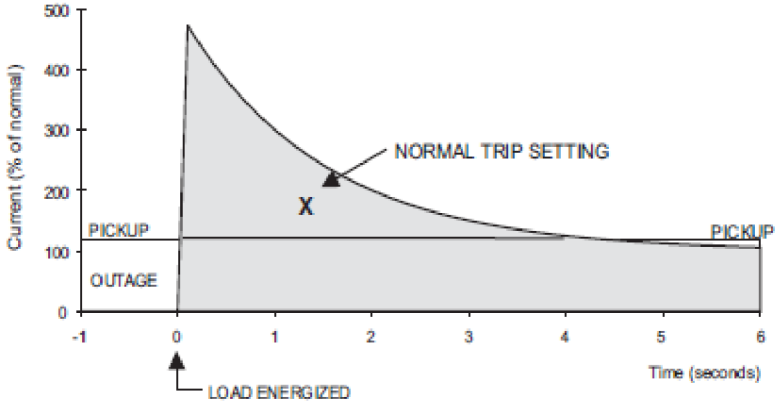

Figure 276: Cold Load Pickup

A Cold Load condition can be initiated in two ways:

- Automatically responding to a loss of source of the feeder, by detecting that all phase currents drop below 5% of the nominal current for an amount of time greater than the ***Outage Time Before Cold Load*** setpoint. This timer is set to an interval after which it is expected that the normal load diversity has been lost. After this delay interval, the output operand is set, the time overcurrent pickups are raised, the instantaneous overcurrent elements are blocked, and the setting group is changed according to the settings.
- The cold load condition can also be immediately initiated by asserting the logic input External Initiation if all phase currents are below 5% of the nominal current. If a Cold Load condition is initiated, the output operand is set, the time overcurrent pickups are raised, the instantaneous overcurrent elements are blocked, and the setting group is changed according to the settings. This method is intended to respond to an event that sets an input (for example, an operator initiated virtual input).

Once Cold Load Pickup is in operation, the output operand remains set until at least one phase of the load has returned to a level above 5% of nominal current for the interval programmed by the ***Cold Load Time Before Reset*** setting has expired. The ***Reset delay interval*** is intended to be set to a period that extends until the feeder load has decayed to normal levels. After this time has expired, overcurrent (time and instantaneous) settings and settings group settings are returned to normal.

The CLP function can adjust the overcurrent protection settings, when Autoreclose (AR) function is not enabled. When AR is enabled, the CLP function operation will not take duplicate action on adjusting overcurrent settings. This is shown in the Cold Load Pickup logic diagram.

Both initiating inputs can be inhibited by a blocking input.

> *Note:*
> *Two CLP elements, CLP1 and CLP2 are provided in 850 relays ordered to support two breakers. In this case the selection of the CT bank under the Signal Input setpoint for CLP1 must be associated with BKR1, and the CT bank under Signal Input for CLP2 must be associated with BKR2. This is also dictated by the flex operand input "AR 1 Disabled" in the CLP1 scheme.*

Path: ***Setpoints*** > ***Control*** > ***Cold Load Pickup X***

FUNCTION

Range: Disabled, Alarm, Latched Alarm, Configurable

Default: Disabled

SIGNAL INPUT

Range: Order code dependent

Default: CT Bank 1-J1

This setting provides selection of currents input (CT Bank) for the CLP algorithm.

EXTERNAL INITIATION

Range: Off, Any FlexLogic operand

Default: Off

The setpoint selects the FlexLogic operand, digital input, virtual input, or remote input that initiates the Cold Load Pickup scheme, bypassing the Outage Time Before Cold Load.

OUTAGE T BEFORE COLD LOAD

Range: 0.000 to 6000.000 s in steps of 0.001 s

Default: 1000.000 s

The setting provides a definite time after which it is expected that the normal load diversity has been lost.

COLD LOAD T BEFORE RESET

Range: 0.000 to 6000.000 s in steps of 0.001 s

Default: 100.000 s

The setting provides a definite time after which it is expected that the feeder load has decayed to a normal level.

BLOCK PHASE IOC 1 (2, 3, 4)

Range: Off, On

Default: Off

If On, the operation of the PHASE IOC 1/2 protection element is blocked after the Cold Load Pickup condition is detected.

BLOCK NEUTRAL IOC 1 (2, 3, 4)

Range: Off, On

Default: Off

If On, the operation of the NEUTRAL IOC 1/2 protection element is blocked after the Cold Load Pickup condition is detected.

BLOCK GROUND IOC 1 (2, 3, 4)

Range: Off, On

Default: Off

If On, the operation of the GROUND IOC 1 protection element is be blocked after the Cold Load Pickup condition is detected.

BLOCK SENS GROUND IOC 1 (2, 3, 4)

Range: Off, On

Default: Off

If On, the operation of the SENSITIVE GROUND IOC 1 protection element is be blocked after the Cold Load Pickup condition is detected.

RAISE PHASE TOC 1 (2, 3, 4) PKP

Range: 0 to 100% in steps of 1%

Default: 0

The setpoint determines the characteristics of the PHASE OVERCURRENT TOC 1/2 protection element by raising the Pickup level.

RAISE NEUTRAL TOC 1 (2, 3, 4) PKP

Range: 0 to 100% in steps of 1%

Default: 0

The setpoint determines the characteristics of the NEUTRAL OVERCURRENT TOC 1/2 protection element by raising the Pickup level.

RAISE GROUND TOC 1 (2, 3, 4) PKP

Range: 0 to 100% in steps of 1%

Default: 0

The setpoint determines the characteristics of the GROUND TOC 1 protection element by raising the Pickup level.

RAISE SENS GND TOC 1/2 PKP

Range: 0 to 100% in steps of 1%

Default: 0

The setpoint determines the characteristics of the SENSITIVE GROUND TOC 1 protection element by raising the Pickup level.

RAISE NEG SEQ TOC 1/2 PKP

Default: 0

Range: 0 to 100% in steps of 1%

The setpoint determines the characteristics of the NEGATIVE SEQUENCE TOC 1 protection element by raising the Pickup level.

SELECT SETTING GROUP

Range: Active, Group 1,2,3,4,5,6

Default: Active

The setpoint determines the setting group that is used after the Cold Load Pickup condition is detected.

BLOCK

Range: Off, Any FlexLogic operand

Default: Off

OUTPUT RELAY X

Range: Operate, Do Not Operate

Default: Do Not Operate

EVENTS

Range: Disabled, Enabled

Default: Enabled

TARGETS

Range: Disabled, Self-reset, Latched

Default: Self-reset

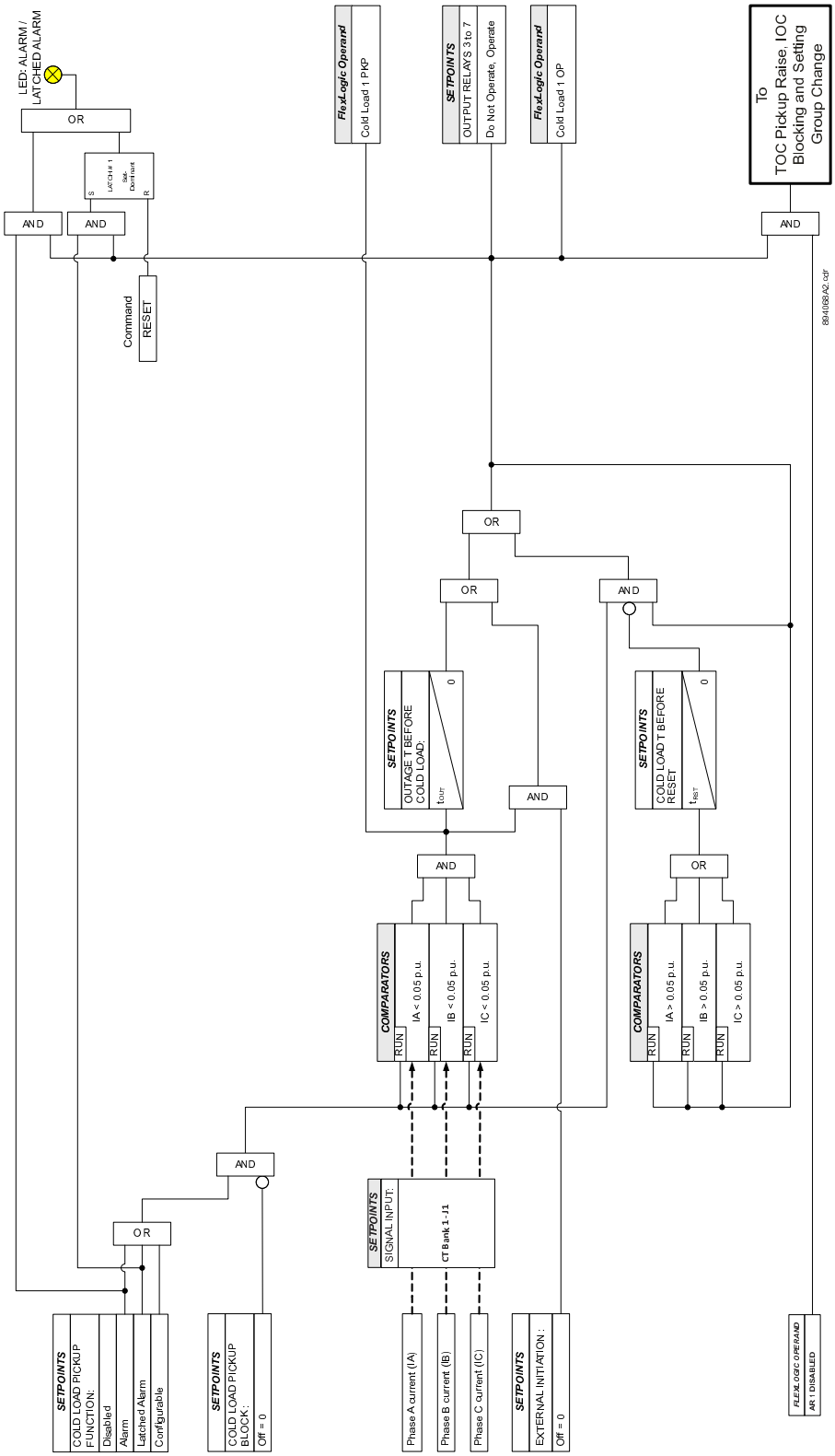

Figure 277: Cold Load Pickup logic diagram

11.15 UNDERVOLTAGE RESTORATION

Note:
When the relay is ordered to support two UV Restoration elements, the UV Restore 1 element is always associated with Breaker 1, and UV Restore 2 element is always associated with Breaker 2. Other combinations are not possible. The UV Restore element will send close command only to this output relay that is selected under Close Relay Select setpoint of the corresponding breaker

This scheme is initiated by user-defined operands. Once initiated it monitors the bus or line voltage level, and sends a command when the voltage on the programmed number of phases has risen above the programmed level for a selected time interval. Synchrocheck supervision may be applied for this command to operate the output relay programmed for ***BKR 1 Close Relay Select*** setpoint. The scheme is equipped with an incomplete sequence timer, so it does not remain initiated for an indeterminate time, but automatically resets if the voltage does not recover during the programmed interval. Initiation of the scheme can be canceled by a Reset command. A Block Restoration logic input is available to prevent both initiation and operation. It is recommended that if automatic undervoltage restoration is to be used, the ***Cold Load Pickup*** feature is also enabled, in order to prevent the breaker from tripping shortly after it is automatically closed.

The settings of this function produce Pickup and Close flags. Once the Undervoltage Restoration is initiated by any of the user-defined elements, the Undervoltage Restoration Pickup flag is asserted when the measured voltages on the programmed number of phases are above the MINIMUM value. The Undervoltage Restoration Close flag is asserted if the element stays picked up for the time defined by the restore time delay.

The incomplete sequence timer automatically resets the element if the voltage does not recover during the programmed interval after the initiation.

Note:
*The use of the Undervoltage (UV) Restoration feature must be carefully accessed regarding the application of the breaker in the power system. If the **Synchrocheck Supervision** setpoint is not available or is set to `Bypass`, the application of the feature must be limited to the use of breakers associated with de-energized feeders, lines, and buses. If the Synchrocheck function is selected in the order code, the UV Restoration can be safely used for breakers connecting two live lines, or two live buses, providing the setpoint **Synchrocheck Supervision** is set to Synchrocheck Breaker Close Permission (`Sync1 Close Perm`).*

Path: ***Setpoints*** > ***Control*** > ***UV Restoration 1(X)***

FUNCTION

Range: Disabled, Close, Alarm, Latched Alarm, Configurable

Default: Disabled

Output relay #2 Close operates only when the **Close** function is selected, the element operates, and Synchrocheck supervision is applied. The ALARM LED does not turn on if the element operates when set to function **Close**.

INITIATION

Range: Off, Ph UV 1 OP, Ph UV 2 OP, Aux UV 1 OP, Aux UV 2 OP, Timed UV 1-4, UV Reactive Power 1-6

Default: Off

The setpoint selects the FlexLogic operand that initiates the Phase or Auxiliary UV Restore scheme; typically the operate signals from Phase Undervoltage functions.

PHASES FOR OPERATION

Range: Any one, Any Two, All Three

Default: All Three

The setting defines the number of voltages required for operation of the Undervoltage Restoration function. The setpoint is seen only if INITIATION is “PHASE UV 1 OP” or “PHASE UV 2 OP”.

MINIMUM VOLTAGE

Range: 0.000 to 1.250 x VT in steps of 0.001 x VT

Default: 0.900 x VT

The setting sets the minimum voltage for Undervoltage Restoration element operation specified per times VT.

> *Note:*
> *The minimum voltage used here applies to the voltage input programmed under the Signal Input setpoint of the element used for UV Restore Initiation. For example, if Phase UV 1 OP is used for initiation for the UV Restore 1 scheme, the minimum voltage setting value will apply to the voltage (Selected VT bank) programmed under Signal Input setpoint from ‘Phase Undervoltage 1’ element menu.*

RESTORE DELAY

Range: 0.000 to 6000.000 s in steps of 0.001 s

Default: 10.000 s

The setting provides a definite restore time delay. Instantaneous operation is selected by a restore time delay setting of 0.000 s.

INCOMPLETE SEQUENCE TIME

Range: 1 to 10000 min in steps of 1 min

Default: 100 min

The setting provides a definite reset time delay.

SYNCHROCHECK SUPERVISION

Range: Bypass, Sync 1 Cls Perm, Sync 2 Cls Perm

Default: Bypass

The setpoint selects Synchrocheck supervision. The closing signal (for output #2 only) from the UV Restore function can be supervised by the Synchrocheck function. The Synchrocheck function has to be enabled and set accordingly. For applications where Synchrocheck and/or dead source check is not needed, supervision can be bypassed. If the Synchrocheck function is not selected in the order code, this setting would be hidden and defaulted to Bypass.

> *Note:*
> *If the supervision is not bypassed and UV Restore is applied for an application where the breaker is located on radial feeders, or line is powered by one source only, the DEAD SOURCE PERM setpoint from the Synchrocheck menu shall not be disabled.*

> *Note:*
> *A Synchrocheck supervised UV Restore CLOSE command is sent directly to output #2. For other outputs, logic has to be created for supervision as required.*

BLOCK

Range: Off, Any FlexLogic operand

Default: Off

OUTPUT RELAY X

Range: Operate, Do Not Operate

Default: Do Not Operate

EVENTS

Range: Disabled, Enabled

Default: Enabled

TARGETS

Range: Disabled, Self-reset, Latched

Default: Self-reset

> *Note:*
> *Upon voltage recovery (i.e. measured voltage above programmed setpoint), and "Close" output relay selected as Self-Reset type, the UV Restore operating condition and hence the Close output relay, will reset automatically after the breaker is detected closed. If the "Close" output relay is selected as Pulsed type, the output relay will stay closed, until the programmed Seal-In time expires.*

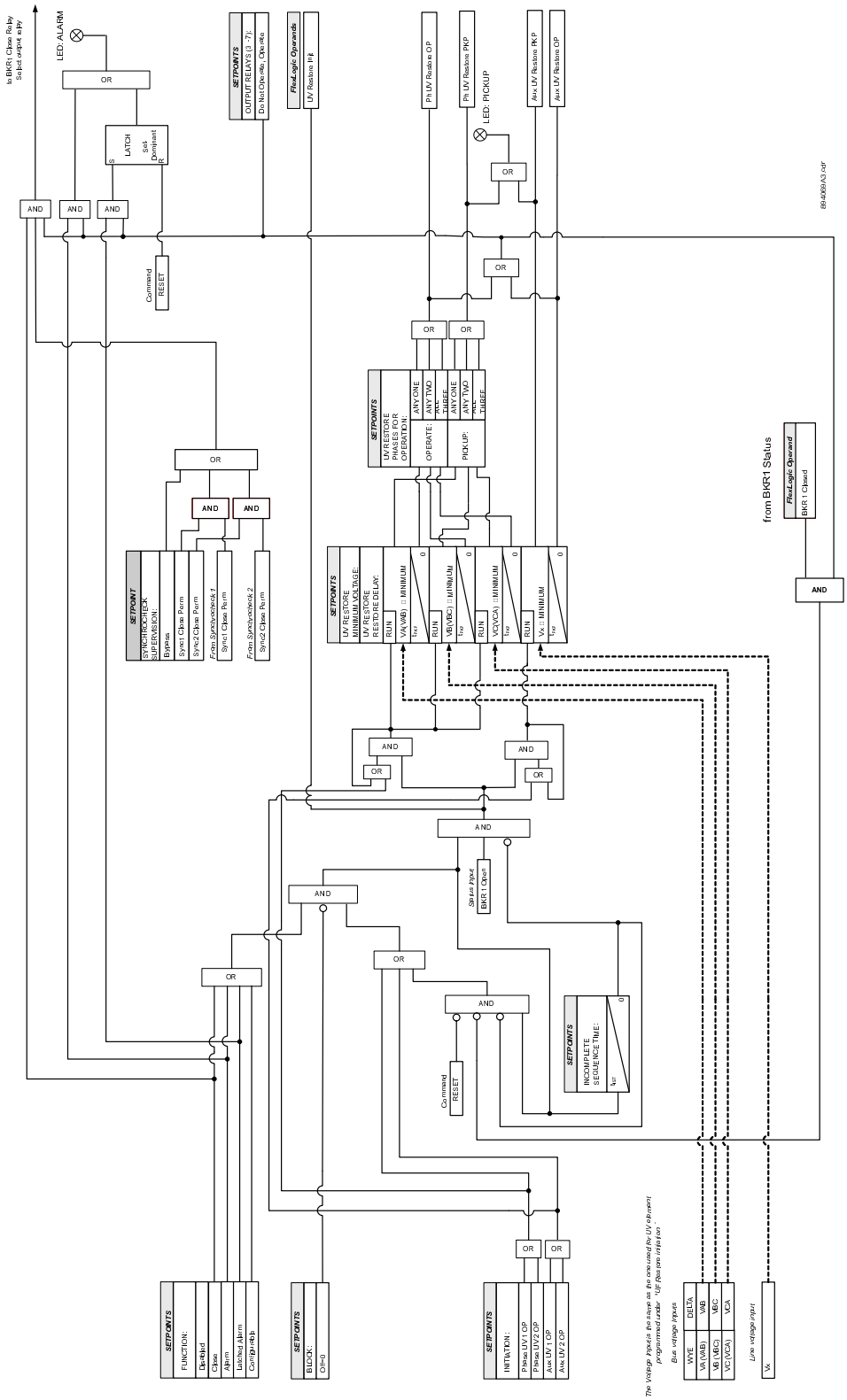

Figure 278: Undervoltage Restoration logic diagram

11.16 UNDERFREQUENCY RESTORATION

Note:
When the relay is ordered with support for two UF Restoration elements, the UF Restore 1 is always associated with Breaker 1, and UF Restore 2 is always associated with Breaker 2. Other breaker combinations are not possible. The UF Restore element will send close command only to the output relay that is selected under the Close Relay Select setpoint of the corresponding breaker.

This scheme is initiated by user-defined operands, which can be any operand of the underfrequency elements or frequency rate of change in a decreasing direction. Once initiated, it monitors the composite voltage level and frequency, and sends a command when the frequency and the composite voltage has risen above the programmed minimum level for a selected time interval. Synchrocheck supervision may be applied for this command to operate Close Relay #2. The scheme is equipped with an Incomplete Sequence timer, so it does not remain initiated for an indeterminate time, but automatically resets if the voltage and frequency do not recover during the programmed interval. Initiation of the scheme can be cancelled by a Reset command. A “Block Restoration” logic input is available to prevent both initiation and operation. It is recommended that if automatic Underfrequency Restoration is to be used, the Cold Load Pickup feature is also enabled in order to prevent the breaker from tripping shortly after it is automatically closed.

The settings of this function produce Pickup and Close flags. Once Underfrequency Restoration is initiated by the user-selected operand, the Underfrequency Restoration Pickup flag is asserted when the measured frequency and voltage of the specified source are above the MINIMUM value. The Underfrequency Restoration Close flag is asserted if the element stays picked up for the time defined by the restore time delay.

The incomplete sequence timer automatically resets the element if the voltage and frequency do not recover during the programmed interval after the initiation.

Note:
The use of the Underfrequency (UF) Restoration feature must be carefully accessed regarding the application of the breaker in the power system. If the “Synchrocheck Supervision” setpoint is not available (per relay’s order code) to program in the UF Restoration menu, or it is available, but is set to “Bypass”, the application of the feature must be limited to the use of breakers associated with de-energized feeders, lines, buses. If the Synchrocheck function is selected in the order code, the UF Restoration can be safely used for breakers connecting two live lines, or two live buses, providing the setpoint Synchrocheck Supervision is set to Synchrocheck Breaker Close Permission (Sync1 Close Perm).

Path: ***Setpoints*** > ***Control*** > ***Underfrequency Restoration 1(X)***

FUNCTION

Range: Disabled, Close, Alarm, Latched Alarm, Configurable

Default: Disabled

Output relay #2 Close operates only when the **Close** function is selected, the element operates, and Synchrocheck supervision is applied. The “ALARM” LED does not turn on if the element operates when set to function **Close**.

INITIATION

Range: Off, Underfreq 1(X) OP, or FreqRate1(X) DWN OP

Default: Off

The setpoint selects the FlexLogic operand that initiates the UF Restore scheme; typically the operate signals from Underfrequency or Frequency Rate of Change functions.

MINIMUM VOLTAGE

Range: 0.000 to 1.250 x VT in steps of 0.001 x VT

Default: 0.900 x VT

The setting sets the minimum voltage for Underfrequency Restoration element operation specified per times VT.

> *Note:*
> *If the initial frequency is measured from a 3-phase delta connected VT, the positive sequence voltage is used as the supervision voltage. In such condition, the true supervision level is internally changed to 1/sqrt(3) of the user setting since the base of VT here is the phase-phase voltage.*

> *Note:*
> *The Minimum Voltage setpoint for the selected UF Restore element applies to the same voltage input as the one programmed in the menu of the element selected for UF Restore Initiate setpoint.*

MINIMUM FREQUENCY

Range: 20.00 to 65.00 Hz in steps of 0.01 Hz

Default: 59.90 Hz

The setting sets the minimum frequency to allow the Underfrequency Restoration element to operate.

> *Note:*
> *The voltage and frequency used here should be associated with the initiation signal. For example, if the UF restore scheme is triggered by Underfreq 1 OP, the voltage and frequency values in the 'Underfrequency 1' element should be applied.*

RESTORE DELAY

Range: 0.000 to 6000.000 s in steps of 0.001 s

Default: 10.000 s

The setting provides a definite restore time delay. Instantaneous operation is selected by a restore time delay setting of 0.000 s.

INCOMPLETE SEQUENCE TIME

Range: 1 to 10000 min in steps of 1 min

Default: 100 min

This setting provides a definite reset time delay.

SYNCHROCHECK SUPERVISION

Range: Bypass, Sync1 Close Perm

Default: Bypass

The setpoint selects Synchrocheck supervision. The closing signal (for output #2 only) from the UF Restore function can be supervised by the Synchrocheck function. The Synchrocheck function has to be enabled and set accordingly. For applications where Synchrocheck and/or dead source check is not needed, supervision can be bypassed. If the Synchrocheck function is not selected in the order code, this setting would be hidden and defaulted to Bypass.

Note:
If the supervision is not bypassed and UF Restore is applied for an application where the breaker is located on radial feeders, or line is powered by one source only, the DEAD SOURCE PERM setpoint from the Synchrocheck menu must not be disabled.

Note:
A Synchrocheck supervised UF Restore CLOSE command is sent directly to output #2. For other outputs, logic has to be created for supervision as required.

BLOCK

Range: Off, Any FlexLogic operand

Default: Off

OUTPUT RELAY X

Range: Operate, Do Not Operate

Default: Do Not Operate

EVENTS

Range: Disabled, Enabled

Default: Enabled

TARGETS

Range: Disabled, Self-reset, Latched

Default: Self-reset

Note:
Upon voltage and frequency recovery (measured frequency above programmed minimum), and “Close” output relay selected as Self-Reset type, the UF Restore operating condition and hence the Close output relay will reset automatically after the breaker is detected closed. If the “Close” output relay is selected as Pulsed type, the output relay will stay closed, until the programmed Seal-In time expires.

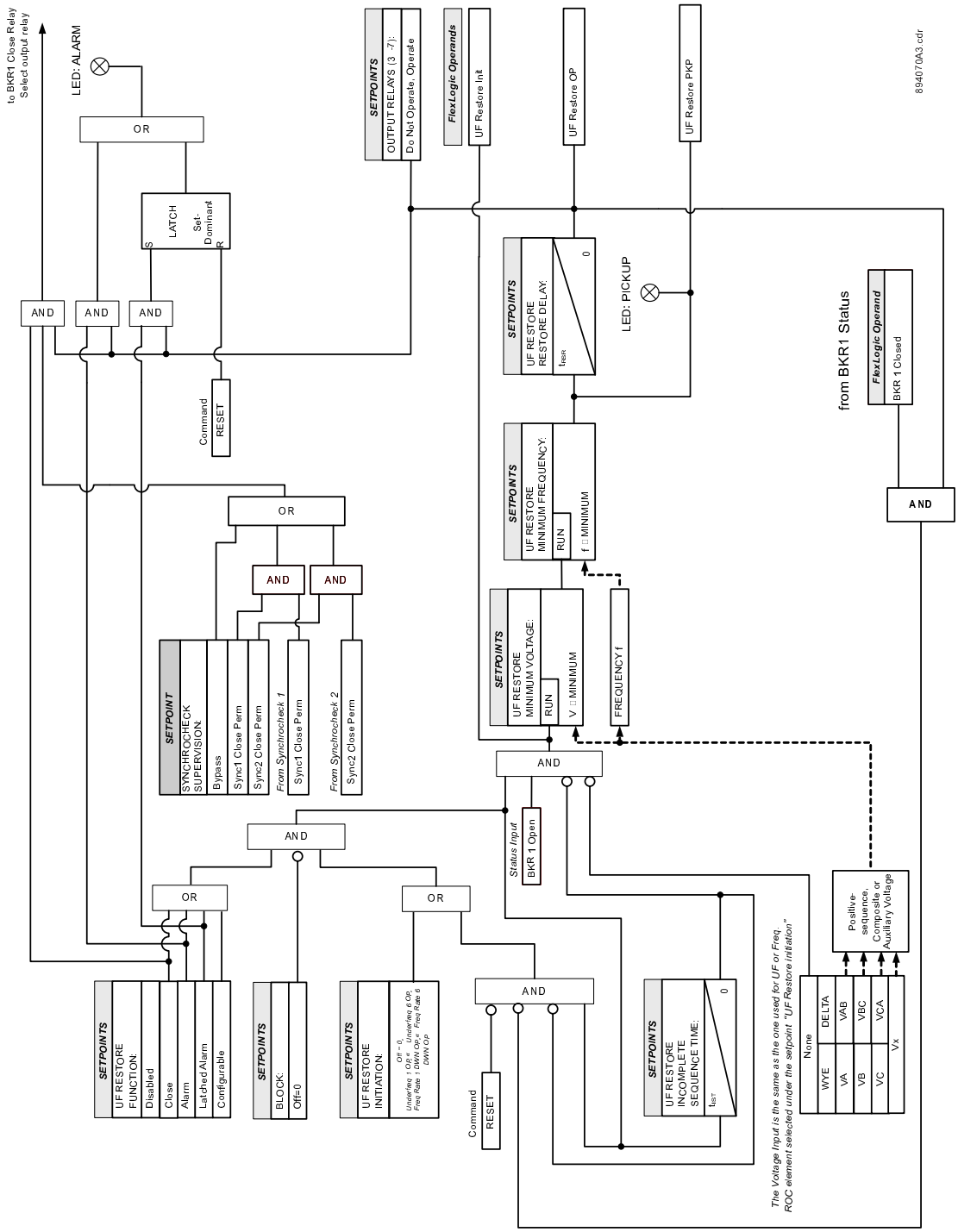

Figure 279: Underfrequency Restoration logic diagram

11.17 BUS TRANSFER

The Transfer scheme is intended for application to a set of three circuit breakers on a Main-Tie-Main arrangement, two of which (Incomers 1 and 2) connect sources of electrical energy to two buses which could be paralleled through the Bus Tie breaker. The normal system configuration is with both incoming breakers closed and the bus tie breaker open. The transfer scheme is known as Open Transfer, with an *Open-before-Close* operation sequence. This means that the faulty incomer is removed from service before the tie breaker is closed.

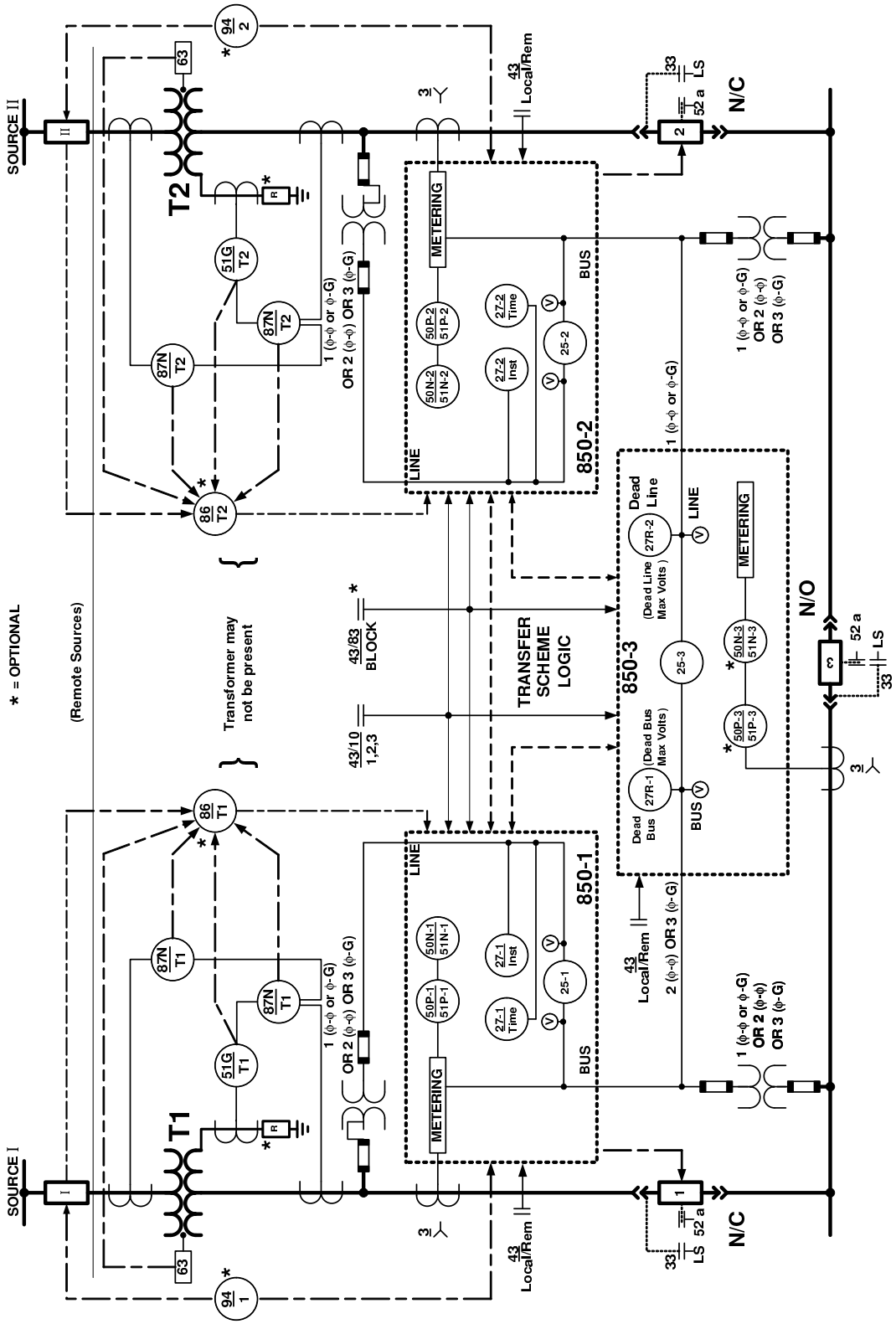

Figure 280: Transfer Scheme One-Line Diagram

The Transfer Scheme minimizes the effect of outages on one of the incoming supplies by opening the incoming breaker connected to that supply, then re-energizing the dead bus by closing the bus tie breaker to transfer the dead bus to the live source. To protect against damage to motors connected to the dead bus, the bus tie breaker is

not allowed to close, after a Transfer has been initiated, until the decaying (residual) voltage on the bus has been reduced to a safe level.

The Transfer Scheme can be used in conjunction with both non-draw-out and draw-out switchgear. Draw-out switchgear designs can make use of an auxiliary switch that confirms that the monitored breaker is racked-in (connected position) and therefore ready for operation. Fixed (non-draw-out) breaker installations can use contacts on the associated isolating disconnect switches (if available) for this purpose.

In addition to the relay required for each of the three circuit breakers, the system requires two manually-operated control switches (or equivalent devices), or custom-made logic with digital inputs and communication.

Device 43/10: Select to Trip Control Switch.

The Trip Control Switch is a three-position switch with at least three contacts, one for each relay, which obey the following table:

Contact No.	Position		
	1: Incomer 1	2: Incomer 2	3: Tie Breaker
1	X		
2		X	
3			X

It is necessary to connect one contact to each relay. This switch selects the breaker that trips in the eventuality that all three breakers become closed, to prevent the two incoming systems to remain connected in parallel. The contacts can be either normally-open or normally-closed, depending on the logic of the corresponding input used for this purpose. If custom made logic is used, one breaker has to be selected only.

Device 43/83: Block - Enable Transfer.

This is an optional two-position switch or equivalent device, with at least three contacts (one for each relay) that obeys the following table:

Contact No.	Position	
	Block	Enable
1: Incomer 1	X	
2: Incomer 2	X	
3: Tie Breaker	X	

One contact must be connected to each relay. This switch selects either the Transfer Scheme in Block position or the Transfer Scheme in Enable position. The contacts are either normally-open or normally-closed, depending on the logic of the corresponding input used for this purpose. When Device 43/83 is in the Block position, the contact connected to relay places the corresponding input in the position for blocking the operation of the Auto Transfer Scheme. At this point in time, a system condition that might trip one of the incomers does not initiate the Transfer sequence.

If custom made logic with digital input and communication is used, the Transfer function has to blocked (or unblocked) simultaneously for all three relays.

Note:
Because a relay is required on the bus tie breaker, it allows a bus-splitting operation. This is accomplished by setting the Time Overcurrent elements in the relay on the bus tie breaker to trip faster than the incomers, opening the bus tie before an incomer when operating from only one source.

For Source 1 as the failed side, the Transfer (trip of Incomer 1 followed by Bus Tie closing) from Relay 1 can be initiated by:

- Operation of the transformer 1 lockout relay (86-T).
- Operation of the Source 1 breaker auxiliary trip device (94).
- Time out of Relay 1 line voltage inverse time Undervoltage element (27) caused by low voltage on Source 1.

A transfer initiation is blocked if:

- Any of the three breakers is not in the rack-in (connected) state.
- Incoming Breaker 2 (which is to become the new source) is presently open.
- Detection of an Overcurrent condition on bus 1, to prevent a faulted bus from being transferred to a healthy source.
- The Line Instantaneous Undervoltage element (27) on Source 2 is operated, indicating low voltage on the other source.

If any one of the above block conditions is present, the TRANSFER NOT READY message is displayed by the relays.

Note:
Identical logic with all 1s and 2s interchanged applies to Relay 2 for a loss of Source 2.

Once a condition has caused the 850-1 relay on Incomer 1 (Relay 1) to initiate a transfer, the following sequence of events will take place:

- Relay 1 trips Incomer 1 breaker (Breaker 1).
- Relay 1 issues a close signal to the 850-3 on the Bus Tie breaker (Relay 3).
- When relay 850-3 receives the close command from Relay 1, it is captured and retained until either the Bus Tie breaker (Breaker 3) closes or the Block Transfer logic input is received.
- Relay 850-3 is inhibited from initiating a close command to Tie Breaker by its Synchrocheck element.
- Synchrocheck monitors the voltage on the disconnected bus, and provides the bus decayed (residual) voltage permission-to-close when the Bus 1 voltage decays to the pre-set level.

The three breakers are under prevent-parallel checking whenever the Transfer Scheme is operational. If a third breaker is closed when the other two breakers are already closed, the scheme automatically trips the breaker selected by Switch 43/10, “Selected To Trip”.

Path: ***Setpoints*** > ***Control*** > ***Bus Transfer***

FUNCTION

Range: Disabled, Incomer 1, Incomer 2, Bus Tie

Default: Disabled

If the Transfer scheme is not required, set Transfer function to “Disabled”. If not disabled, this setpoint assigns the function of the associated circuit breaker to the relay. This selection programs the relay to use the logic required by each of the three breakers. Select “Incomer 1” or “Incomer 2” for this setpoint if the relay is associated with the breaker to be used as Incomer 1 or 2 respectively. Select “Bus Tie” if the relay is associated with the bus tie breaker.

The selection of the **Incomer 1**, **Incomer 2** or **Bus Tie** setting enables the Transfer function.

When the Incomer 1 function is selected, the TRANSFER function operates according to the Transfer Scheme Incomer Breaker 1 logic (see INCOMER BREAKER 1 Logic Diagram below) and TRANSFER setting.

When the Incomer 2 function is selected, the TRANSFER function operates according to the Transfer Scheme Incomer Breaker 2 logic (see INCOMER BREAKER 2 Logic Diagram below) and TRANSFER setting.

When the Bus Tie function is selected, the TRANSFER function operates according to the Transfer Scheme Bus Tie Breaker logic (see BUS TIE BREAKER Logic Diagram below) and Transfer Bus Tie setting.

11.17.1 BUS TRANSFER SETPOINTS INCOMER 1

When the INCOMER 1 function is selected the following display is available:

SETTING	PARAMETER
Inc 1 BKR Connected	Off
Inc 1 BKR Select To Trip	Off
Delay Select To Trip	0.000 s
Inc 2 BKR Conn&Closed	Off
Tie-BKR Conn&Closed	Off
Tie-BKR Connected	Off
Inc 1 Transformer Lockout	Off
Inc 1 Source Trip	Off
Timed UV On This Source	Off
Block Trip On Double Loss	Disabled
Inc 1 BKR Closed	Off
UV On Other Source	Off
Delay Other Source	3.000 s
Inst UV On This Source	Off
Delay This Source	1.000 s
Fault Current Pickup In 1	Off
Fault Current Pickup In 2	Off
Fault Current Pickup In 3	Off
Fault Current Pickup In 4	Off
Fault Current Pickup In 5	Off
Fault Current Pickup In 6	Off
Block Transfer	Off
Events	Enabled
Targets	Self-Reset

INC 1 BKR CONNECTED

Range: Off, Any FlexLogic operand

Default: Off

The setpoint selects the FlexLogic operand, digital input, virtual input or remote input used to inhibit transfer if Incomer breaker 1 cannot be used to pass current from the source to the load (for example when the breaker is in rack-out or test position). This setpoint also provides the condition for “Selected to Trip” breaker logic, FlexLogic operand INC1 CB CON & CLSD required for Incomer 2 Circuit Breaker transfer logic, Bus Tie Circuit Breaker transfer logic, and for blocking #2 close relay.

Note:
For non-draw-out breakers without associated disconnect switches, this setpoint must be set as ON.

INC 1 SELECTED TO TRIP

Range: Off, Any FlexLogic operand

Default: Off

The setpoint selects the FlexLogic operand, digital input, virtual input or remote input used to trip Incomer breaker 1 in the case where all three breakers become closed. This prevents the two incoming power systems from remaining connected in parallel.

DELAY SELECT TO TRIP

Range: 0.000 to 6000.000 s in steps of 0.001 s

Default: 0.000 s

The setting provides the selection of a time delay to be applied to the Trip output relay. The following conditions must be met to start the ***Delay Select To Trip*** setpoint:

- Incomer 1 breaker connected
- Incomer 2 breaker connected and closed
- Tie breaker connected and closed
- Selected to Trip input set to Incomer 1 breaker
- Transfer scheme not blocked.

INC 2 BKR CONNECTED & CLOSED

Range: Off, Any FlexLogic operand

Default: Off

The setpoint selects the FlexLogic operand, digital input, virtual input or remote input used to provide permission for Transfer if Incomer breaker 1 is connected and closed. This setpoint also provides a condition for the “Selected to Trip” breaker logic.

TIE BKR CONNECTED & CLOSED

Range: Off, Any FlexLogic operand

Default: Off

The setpoint selects the FlexLogic operand, digital input, virtual input or remote input used to provide a condition for “Selected to Trip” breaker logic if the bus tie breaker is racked-in (connected) and closed.

TIE BKR CONNECTED

Range: Off, Any FlexLogic operand

Default: Off

The setpoint selects the FlexLogic operand, digital input, virtual input or remote input used to provide permission for Transfer if Bus Tie breaker is racked-in (connected).

The Transfer Scheme can be applied to any one of the following systems:

- Substations with a source transformer and transformer fault detection signal (Device 86T). In addition to the local relays, the signal triggering the transfer sequence can originate from the protection of the upstream transformers. An auxiliary contact from the tripping device (86T) is fed to one of the inputs, which is programmed as “Source Transformer Lockout”.
- Substations with an upstream circuit breaker equipped with a trip signal (Device 94). In addition to the local relays, the signal triggering the transfer sequence can be originated from the upstream protection. An auxiliary contact from the tripping device (94) is fed to one of the inputs, which is programmed as “Source Trip”.
- Substations with a source transformer and transformer fault detection signal (Device 86T) and with an upstream circuit breaker equipped with a trip signal (Device 94). In addition to the local relays, the signal triggering the transfer sequence can be originated from the protection of the upstream transformers or from the upstream protection. Auxiliary contacts from the tripping devices (86T and 94) are fed to the inputs which are programmed as “Source Transformer Lockout” and “Source Trip”.
- Substations with no signaling from upstream equipment. The initiating signal is generated by one of the two relays protecting the Incomers. Typically the Time Undervoltage Protection Function trip is the initiating signal.

The only differences in implementing the Transfer Scheme (among the configurations presented above) are by connecting input signals to the relay when available.

INC 1 TRANSFORMER LOCKOUT

Range: Off, Any FlexLogic operand

Default: Off

The setpoint selects the FlexLogic operand, digital input, virtual input or remote input used to initiate Transfer for substations with transformers and transformer fault lockout devices. Typically, an auxiliary contact from the lockout relay (86T) is fed to one of the contact inputs and set as “Source Transformer Lockout”.

INC 1 SOURCE TRIP

Range: Off, Any FlexLogic operand

Default: Off

The setpoint selects the FlexLogic operand, digital input, virtual input or remote input used to initiate Transfer for substations with an upstream circuit breaker equipped with a trip signal (Device 94). The signal triggering the Transfer sequence can be originated from the upstream protection. Typically, an auxiliary contact from the tripping device (94) is fed to one of the contact inputs and set as “Source Trip”.

TIMED UV ON THIS SOURCE

Range: Off, Any FlexLogic operand

Default: Off

The setpoint selects the FlexLogic operand, digital input, virtual input or remote input used to initiate Transfer for loss of source. Typically, a trip from “line” (source) Time Undervoltage protection element is used to initiate Transfer.

BLOCK TRIP ON DOUBLE LOSS

Range: Enabled, Disabled

Default: Disabled

The setpoint selects the required scheme operation in the event of a simultaneous loss of both Source 1 and Source 2. If it is desired to have both of the Incomers trip on Time Undervoltage when this occurs, select “Disabled”. If it is desired to prevent the Incomers from tripping on Time Undervoltage when this occurs, select “Enabled”. With either selection, a transfer-initiated close of the bus tie breaker is not allowed.

INC 1 BKR CLOSED

Range: Off, Any FlexLogic operand

Default: Off

The setpoint selects the FlexLogic operand, digital input, virtual input or remote input used to track a breaker-closed state. Typically, a 52a auxiliary breaker contact- or breaker-closed state from the Breaker Detection control element is used to indicate the close state of the breaker, thus preventing the two incoming power systems from being connected in parallel, while at the same time permitting Transfer logic.

UV ON OTHER SOURCE

Range: Off, Any FlexLogic operand

Default: Off

The setpoint selects the FlexLogic operand, digital input, virtual input or remote input used to block transfer for undervoltage on the other source. Typically, “line” (source) Instantaneous Undervoltage protection on the other source wired as digital input or sent by communication, is used.

DELAY OTHER SOURCE

Range: 0.000 to 6000.000 s in steps of 0.001 s

Default: 3.000 s

The setting provides selection of a time delay that prevents Transfers that can otherwise be caused by a non-simultaneous return of source voltages after a loss of both sources. It establishes an interval from the return of the second source during which a Transfer cannot be initiated.

INST UV ON THIS SOURCE

Range: Off, Any FlexLogic operand

Default: Off

The setpoint selects the FlexLogic operand, digital input, virtual input or remote input used to block the Transfer after reset of the overcurrent elements on this source. Typically, “line” (source) Instantaneous Undervoltage protection element is used.

> *Note:*
> *The same operand has to be used to block transfer initiation (setting UV ON OTHER SOURCE for Incomer 2 relay) on the other relay as this source is “the other source is experiencing low voltage” for the other relay.*

DELAY THIS SOURCE

Range: 0.000 to 6000.000 s in steps of 0.001 s

Default: 1.000 s

The setting provides selection of a time interval from the reset of the overcurrent elements selected on this source during which the low voltage instantaneous is allowed to block transfer.

FAULT CURRENT PICKUP IN 1 (to 6)

Range: Off, Any FlexLogic operand

Default: Off

The setpoint selects the FlexLogic operand, digital input, virtual input or remote input used to block transfer, while a fault, which can cause a severe voltage dip, is present on the load side of the breaker. Typically, Phase and Neutral Time and Instantaneous Overcurrent protection Pickup elements are used.

> *Note:*
> *This fault is cleared by Time Overcurrent protection on the Incomer or an upstream breaker. If Device 50P is set properly, during this event it allows a low voltage Timed Undervoltage function to time out before the Inverse Time Phase Overcurrent operates, but still prevent Transfer initiation. The 50P element is set above the maximum current caused by either the bus motor contribution to an upstream fault, or the maximum current during low voltage conditions. The 50N element is set to detect arcing ground faults, but allow permitted unbalances.*

BLOCK TRANSFER

Range: Off, Any FlexLogic operand

Default: Off

The Transfer is blocked when the selected operand is asserted.

> *Note:*
> *The #2 CLOSE OUTPUT relay is blocked if Transfer is enabled, but blocked while the breaker is connected (racked-in). If breaker closing is required during maintenance, Transfer must be disabled.*

EVENTS

Range: Disabled, Enabled

Default: Enabled

TARGETS

Range: Disabled, Self-reset, Latched

*Default: Self-rese*t

11.17.2 BUS TRANSFER SETPOINTS INCOMER 2

When INCOMER 2 function is selected the following display is available:

SETTING	PARAMETER
Inc 2 BKR Connected	Off
Inc 2 BKR Select To Trip	Off
Delay Select To Trip	0.000 s
Inc 1 BKR Conn&Closed	Off
Tie-BKR Conn&Closed	Off
Tie-BKR Connected	Off
Inc 2 Transformer Lockout	Off
Inc 2 Source Trip	Off
Timed UV On This Source	Off
Block Trip On Double Loss	Disabled
Inc 2 BKR Closed	Off
UV On Other Source	Off
Delay Other Source	3.000 s
Inst UV On This Source	Off
Delay This Source	1.000 s
Fault Current Pickup In 1	Off
Fault Current Pickup In 2	Off
Fault Current Pickup In 3	Off
Fault Current Pickup In 4	Off
Fault Current Pickup In 5	Off
Fault Current Pickup In 6	Off
Block Transfer	Off
Events	Enabled
Targets	Self-Reset

INC 2 CB CONNECTED

Range: Off, Any FlexLogic operand

Default: Off

The setpoint selects the FlexLogic operand, digital input, virtual input or remote input used to inhibit transfer if Incomer breaker 2 cannot be used to pass current from the source to the load (for example when the breaker is in rack-out or test position). This setpoint also provides the condition for “Selected to Trip” breaker logic, FlexLogic operand INC2 CB CON & CLSD required for Incomer 2 Circuit Breaker transfer logic, Bus Tie Circuit Breaker transfer logic, and for blocking #2 close relay.

Note:
For non-draw-out breakers without associated disconnect switches, this setpoint must be set as ON.

INC 2 SELECTED TO TRIP

Range: Off, Any FlexLogic operand

Default: Off

The setpoint selects the FlexLogic operand, digital input, virtual input or remote input used to trip Incomer breaker 1 in the case where all three breakers become closed. This prevents the two incoming power systems from remaining connected in parallel.

DELAY SELECT TO TRIP

Range: 0.000 to 6000.000 s in steps of 0.001 s

Default: 0.000 s

The setting provides the selection of a time delay to be applied to the trip output relay. The following conditions must be met to start the “Delay Select To Trip” setpoint.

- Incomer 2 breaker connected
- Incomer 1 breaker connected and closed
- Tie-breaker connected and closed
- Selected to Trip input set to Incomer 2 breaker
- Transfer scheme not blocked.

INC 1 BKR CONNECTED & CLOSED

Range: Off, Any FlexLogic operand

Default: Off

The setpoint selects the FlexLogic operand, digital input, virtual input or remote input used to provide permission for Transfer if Incomer breaker 2 is connected and closed. This setpoint also provides a condition for the “Selected to Trip” breaker logic.

TIE BKR CONNECTED & CLOSED

Range: Off, Any FlexLogic operand

Default: Off

The setpoint selects the FlexLogic operand, digital input, virtual input or remote input used to provide a condition for “Selected to Trip” breaker logic if the bus tie breaker is racked-in (connected) and closed.

TIE BKR CONNECTED

Range: Off, Any FlexLogic operand

Default: Off

The setpoint selects the FlexLogic operand, digital input, virtual input or remote input used to provide permission for Transfer if Bus Tie breaker is racked-in (connected).

The Transfer Scheme can be applied to any one of the following systems:

- Substations with a source transformer and transformer fault detection signal (Device 86T). In addition to the local relays, the signal triggering the transfer sequence can originate from the protection of the upstream transformers. An auxiliary contact from the tripping device (86T) is fed to one of the inputs, which is programmed as “Source Transformer Lockout”.
- Substations with an upstream circuit breaker equipped with a trip signal (Device 94). In addition to the local relays, the signal triggering the transfer sequence can be originated from the upstream protection. An auxiliary contact from the tripping device (94) is fed to one of the inputs, which is programmed as “Source Trip”.
- Substations with a source transformer and transformer fault detection signal (Device 86T) and with an upstream circuit breaker equipped with a trip signal (Device 94). In addition to the local relays, the signal triggering the transfer sequence can be originated from the protection of the upstream transformers or from the upstream protection. Auxiliary contacts from the tripping devices (86T and 94) are fed to the inputs which are programmed as “Source Transformer Lockout” and “Source Trip”.
- Substations with no signaling from upstream equipment. The initiating signal is generated by one of the two relays protecting the Incomers. Typically the Time Undervoltage Protection Function trip is the initiating signal.

The only differences in implementing the Transfer Scheme (among the configurations presented above) are by connecting input signals to the relay when available.

INC 2 TRANSFORMER LOCKOUT

Range: Off, Any FlexLogic operand

Default: Off

The setpoint selects the FlexLogic operand, digital input, virtual input or remote input used to initiate Transfer for substations with transformers and transformer fault lockout devices. Typically, an auxiliary contact from the lockout relay (86T) is fed to one of the contact inputs and set as “Source Transformer Lockout”.

INC 2 SOURCE TRIP

Range: Off, Any FlexLogic operand

Default: Off

The setpoint selects the FlexLogic operand, digital input, virtual input or remote input used to initiate Transfer for substations with an upstream circuit breaker equipped with a trip signal (Device 94). The signal triggering the Transfer sequence can be originated from the upstream protection. Typically, an auxiliary contact from the tripping device (94) is fed to one of the contact inputs and set as “Source Trip”.

TIMED UV ON THIS SOURCE

Range: Off, Any FlexLogic operand

Default: Off

The setpoint selects the FlexLogic operand, digital input, virtual input or remote input used to initiate Transfer for loss of source. Typically, a trip from “line” (source) Time Undervoltage protection element is used to initiate Transfer.

BLOCK TRIP ON DOUBLE LOSS

Range: Enabled, Disabled

Default: Disabled

The setpoint selects the required scheme operation in the event of a simultaneous loss of both Source 1 and Source 2. If it is desired to have both of the Incomers trip on Time Undervoltage when this occurs, select “Disabled”. If it is desired to prevent the Incomers from tripping on Time Undervoltage when this occurs, select “Enabled”. With either selection, a transfer-initiated close of the bus tie breaker is not allowed.

INC 2 BKR CLOSED

Range: Off, Any FlexLogic operand

Default: Off

The setpoint selects the FlexLogic operand, digital input, virtual input or remote input used to track a breaker-closed state. Typically, a 52a auxiliary breaker contact- or breaker-closed state from the Breaker Detection control element is used to indicate the close state of the breaker, thus preventing the two incoming power systems from being connected in parallel, while at the same time permitting Transfer logic.

UV ON OTHER SOURCE

Range: Off, Any FlexLogic operand

Default: Off

The setpoint selects the FlexLogic operand, digital input, virtual input or remote input used to block transfer for undervoltage on the other source. Typically, “line” (source) Instantaneous Undervoltage protection on the other source wired as digital input or sent by communication, is used.

DELAY OTHER SOURCE

Range: 0.000 to 6000.000 s in steps of 0.001 s

Default: 3.000 s

The setting provides selection of a time delay that prevents Transfers that can otherwise be caused by a non-simultaneous return of source voltages after a loss of both sources. It establishes an interval from the return of the second source during which a Transfer cannot be initiated.

INST UV ON THIS SOURCE

Range: Off, Any FlexLogic operand

Default: Off

The setpoint selects the FlexLogic operand, digital input, virtual input or remote input used to block the Transfer after reset of the overcurrent elements on this source. Typically, “line” (source) Instantaneous Undervoltage protection element is used.

> *Note:*
> *The same operand has to be used to block transfer initiation (setting UV ON OTHER SOURCE for Incomer 2 relay) on the other relay as this source is “the other source is experiencing low voltage” for the other relay.*

DELAY THIS SOURCE

Range: 0.000 to 6000.000 s in steps of 0.001 s

Default: 1.000 s

The setting provides selection of a time interval from the reset of the overcurrent elements selected on this source during which the low voltage instantaneous is allowed to block transfer.

FAULT CURRENT PICKUP IN 1 (to 6)

Range: Off, Any FlexLogic operand

Default: Off

The setpoint selects the FlexLogic operand, digital input, virtual input or remote input used to block transfer, while a fault, which can cause a severe voltage dip, is present on the load side of the breaker. Typically, Phase and Neutral Time and Instantaneous Overcurrent protection Pickup elements are used.

> *Note:*
> *This fault should be cleared by Time Overcurrent protection on the Incomer or an upstream breaker. If Device 50P is set properly, during this event it allows a low voltage Timed Undervoltage function to time out before the Inverse Time Phase Overcurrent operates, but still prevent Transfer initiation. The 50P element is set above the maximum current caused by either the bus motor contribution to an upstream fault, or the maximum current during low voltage conditions. The 50N element is set to detect arcing ground faults, but allow permitted unbalances.*

BLOCK TRANSFER

Range: Off, Any FlexLogic operand

Default: Off

The Transfer is blocked when the selected operand is asserted.

> *Note:*
> *The #2 CLOSE OUTPUT relay is blocked if Transfer is enabled, but blocked while the breaker is connected (racked-in). If breaker closing is required during maintenance, Transfer must be disabled.*

EVENTS

Range: Disabled, Enabled

Default: Enabled

TARGETS

Range: Disabled, Self-reset, Latched

Default: Self-reset

11.17.3 BUS TRANSFER SETPOINTS TIE-BREAKER

When the BUS TIE function is selected the following display is available:

SETTING	PARAMETER
Tie-BKR Connected	Off
Tie-BKR Select To Trip	Off
Delay Select To Trip	0.000 s
Inc 1 BKR Conn&Closed	Off
Inc 2 BKR Conn&Closed	Off
Tie-BKR Closed	Off
Close Tie-BKR from Inc 1	Off
Close Tie-BKR from Inc 2	Off
Block Transfer	Off
Events	Enabled
Targets	Self-Reset

TIE BREAKER CONNECTED

Range: Off, Any FlexLogic operand

Default: Off

The setpoint selects the FlexLogic operand, digital input, virtual input or remote input used to inhibit transfer if the Bus Tie breaker cannot be used to pass current from the source to the load (for example when the breaker is in rack-out or test position). This setpoint also provides a condition for “Selected to Trip” breaker logic, Flex logic operand TIE CB CON & CLSD is required for Incomer 1 and Incomer 2 Circuit Breaker transfer logic and for #2 close relay block.

Note:
For non-draw-out breakers without associated disconnect switches, this setpoint must be set as ON.

TIE BKR SELECTED TO TRIP

Range: Off, Any FlexLogic operand

Default: Off

The setpoint selects the FlexLogic operand, digital input, virtual input or remote input used to trip the Bus Tie Breaker in the case where all three breakers become closed. This prevents the two incoming power systems from remaining connected in parallel.

DELAY SELECT TO TRIP

Range: 0.000 to 6000.000 s in steps of 0.001 s

Default: 0.000 s

The setting provides the selection of a time delay to be applied to the trip output relay. The following conditions must be met to start the “Delay Select To Trip” setpoint.

- Incomer 1 breaker connected and closed
- Incomer 2 breaker connected and closed
- Tie-breaker connected and closed
- Selected to Trip input set to Bus Tie breaker
- Transfer scheme not blocked.

INC 1 BKR CONNECTED & CLOSED

Range: Off, Any FlexLogic operand

Default: Off

The setpoint selects the FlexLogic operand, digital input, virtual input or remote input used to provide a condition for “Selected to Trip” breaker logic if Incomer 1 breaker is racked-in (connected) and closed.

INC 2 BKR CONNECTED & CLOSED

Range: Off, Any FlexLogic operand

Default: Off

The setpoint selects the FlexLogic operand, digital input, virtual input or remote input used to provide a condition for “Selected to Trip” breaker logic if Incomer 2 breaker is racked-in (connected) and closed.

TIE BREAKER CLOSED

Range: Off, Any FlexLogic operand

Default: Off

The setpoint selects the FlexLogic operand, digital input, virtual input or remote input used to track the Breaker Closed state. Typically, a 52a auxiliary breaker contact or a Breaker Closed state from the Breaker Detection control element is used to indicate close state of the breaker for preventing the two incoming power systems from being connected in parallel and permitting transfer logic.

CLOSE TIE FROM INCOMER 1

Range: Off, Any FlexLogic operand

Default: Off

The setpoint selects the FlexLogic operand, digital input, virtual input or remote input used to signal from Incomer 1 to the Bus Tie Breaker to start the CLOSE operation.

CLOSE TIE FROM INCOMER 2

Range: Off, Any FlexLogic operand

Default: Off

The setpoint selects the FlexLogic operand, digital input, virtual input or remote input used to signal from Incomer 2 to the Bus Tie Breaker to start the CLOSE operation.

BLOCK TRANSFER

Range: Off, Any FlexLogic operand

Default: Off

The Transfer is blocked when the selected operand is asserted.

> *Note:*
> *The #2 CLOSE OUTPUT relay is blocked if Transfer is enabled, but blocked while the breaker is connected (racked-in). If breaker closing is required during maintenance, Transfer must be disabled.*

EVENTS

Range: Disabled, Enabled

Default: Enabled

TARGETS

Range: Disabled, Self-reset, Latched

Default: Self-reset

11.17.4 BUS TRANSFER READY INDICATION

A practical scheme for overall TRANSFER READY indication can be developed by selecting all three relays to operate one of the spare Auxiliary Output relays, and wiring the relays in series with a DC source to turn on a single light bulb (“white light”). The Auxiliary Output relay from each relay can also be wired to turn on an individual light bulb.

The TRANSFER READY flag is high, if all of the following conditions are met:

Incomer x Relay:

- The ***Incomer x*** setting is selected under the TRANSFER FUNCTION setpoint
- The transfer scheme is not blocked from the Block Transfer input
- Bus Tie Breaker is racked-in (connected) and open
- Incomer 1 Breaker is racked-in (connected) and closed
- Incomer 2 Breaker is racked-in (connected) and closed
- No transformer lockout or source trip is present
- No undervoltage is detected on any of the two sources
- No faults on the load side of the circuit breaker.

Tie Breaker Relay:

- The ***Bus Tie*** setting is selected under the TRANSFER FUNCTION setpoint
- The transfer is not blocked from the Block Transfer input
- Bus Tie Breaker is racked-in (connected) and open
- Incomer 1 breaker is racked-in (connected) and closed
- Incomer 2 breaker is racked-in (connected) and closed.

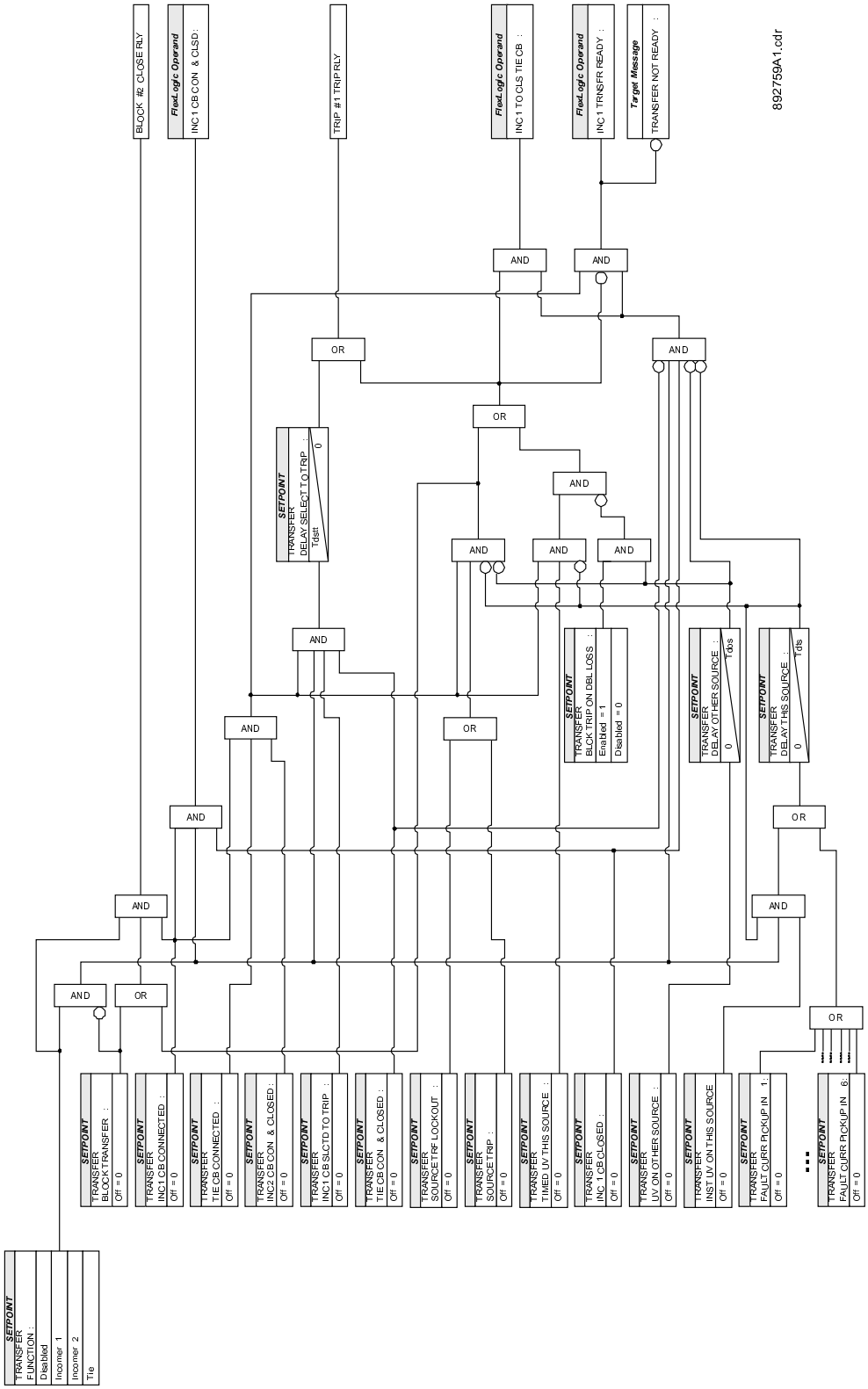

Figure 281: Transfer Scheme - Incomer Breaker 1 logic diagram

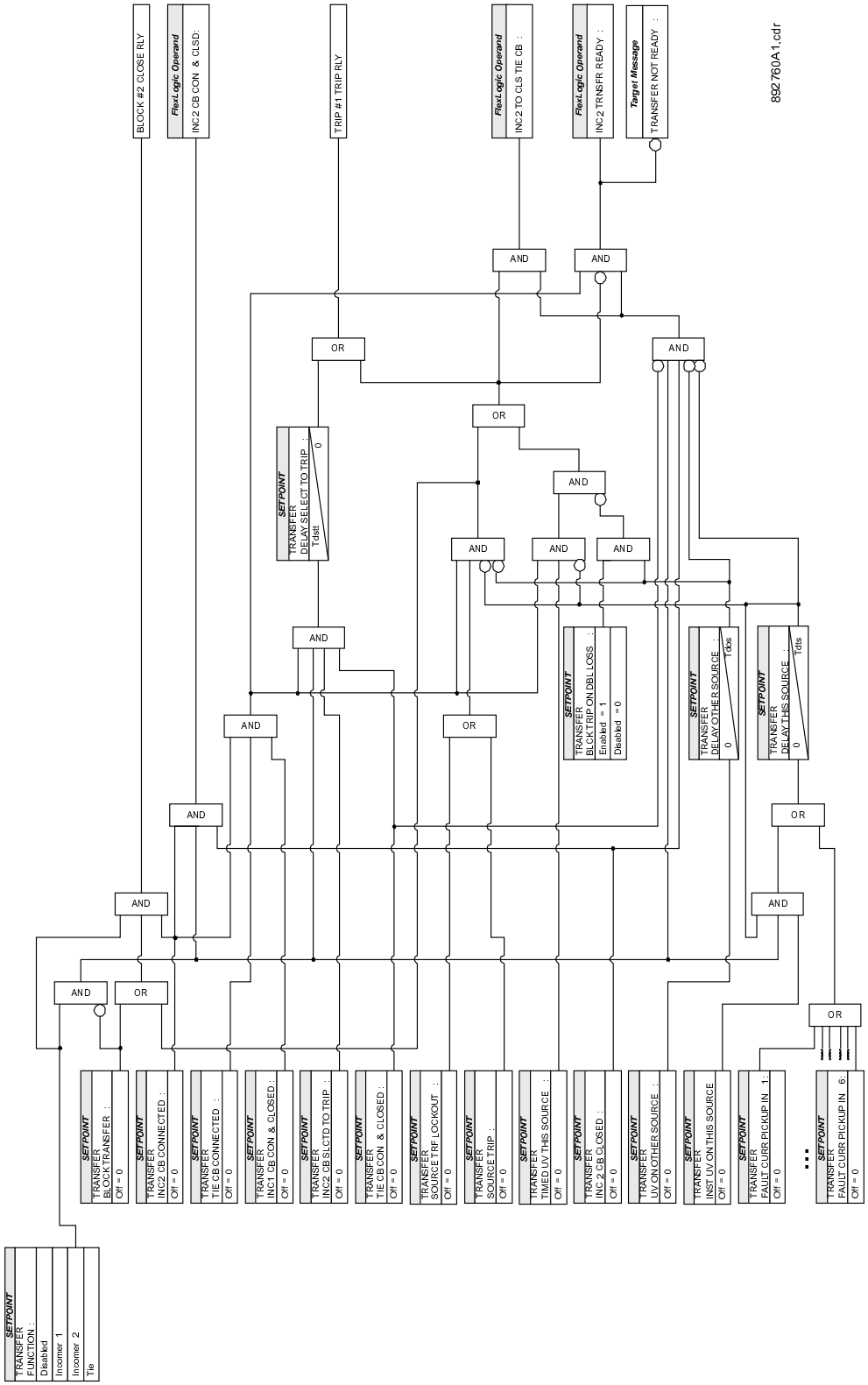

Figure 282: Transfer Scheme - Incomer Breaker 2 logic diagram

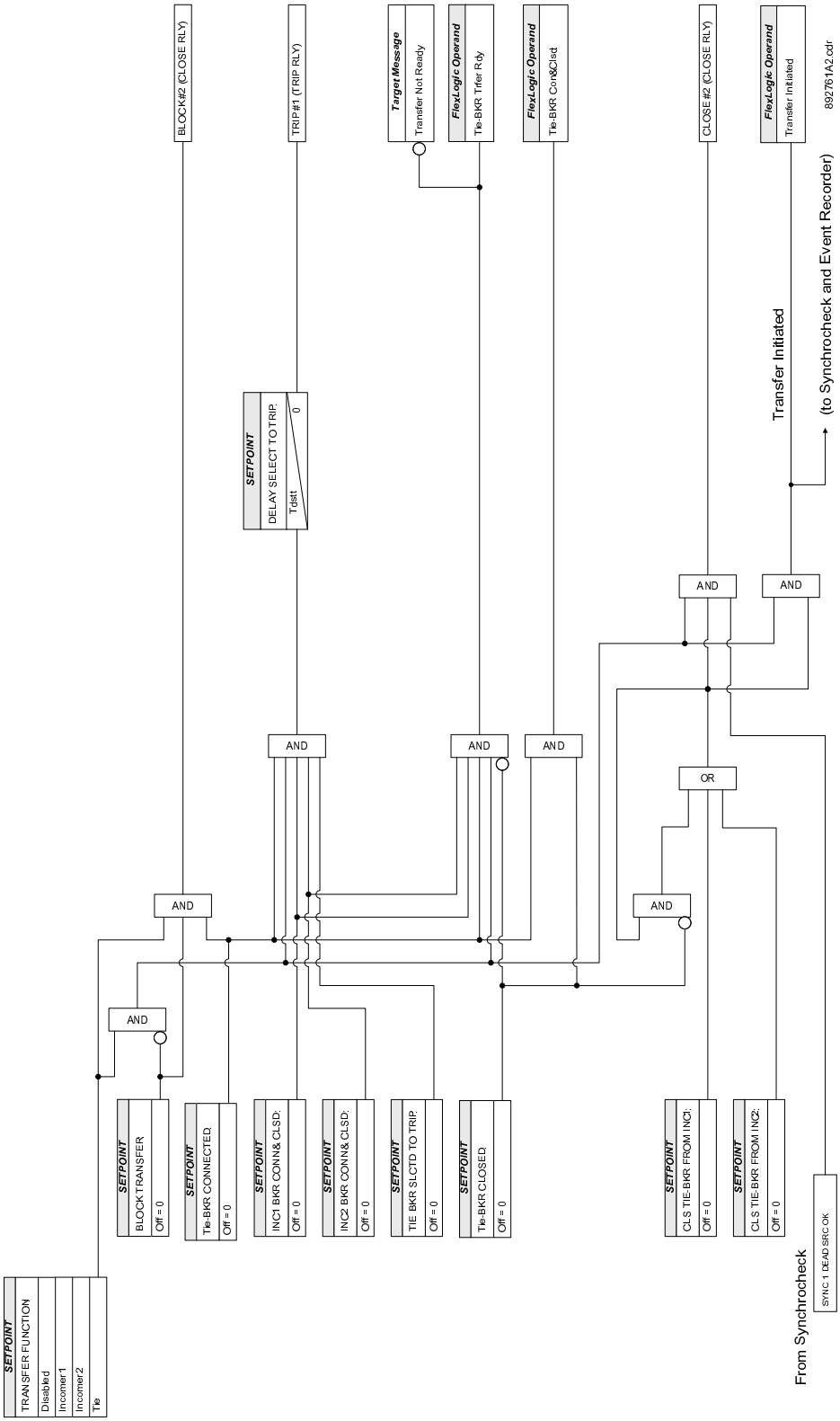

Figure 283: Transfer Scheme - Bus Tie Breaker logic diagram

After the lost source has been re-established, there are three methods to restore the system to normal configuration. Two methods are manual and one is automatic:

Manual Method 1 - when the sources cannot be synchronized: The Bus Tie Breaker must be manually opened before the open incomer can be manually closed. In this procedure the incomer is allowed to close only if the

incoming source (Line VT) voltage is above a live threshold and the load (Bus VT) voltage is below a dead threshold value (setpoints for voltage check - dead sources associated with the Synchrocheck function must be set).

Manual Method 2 - when the sources are synchronized with Synchrocheck supervision: It is possible to manually close the open incomer to parallel all three breakers (setpoints for Synchrocheck associated with the Synchrocheck function must be set). The scheme then automatically opens a breaker that has been previously selected to trip if all three breakers become closed. If the Bus Tie Breaker is `Selected To Trip`, it is tripped by the system and opens.

Automatic Method: The automatic method of returning the system to normal configuration uses the Undervoltage Restoration scheme. Setpoints for the Undervoltage Restoration must be set.

Besides the setpoints and logic incorporated into the Transfer Scheme, the relays make use of:

- Phase Instantaneous Overcurrent elements (Device 50P)
- Neutral Instantaneous Overcurrent elements (Device 50N)
- Line Undervoltage elements (Device 27)
- The Synchrocheck (Device 25) features of the Bus Tie relay
- Trip and Close Output Relays
- Contact Inputs.

Optionally

- Breaker (breaker status open, closed, disconnected)
- Breaker Control (manual/remote close or open)
- The Synchrocheck (Device 25) features of the Incomer 1 and Incomer 2 relays
- Undervoltage Restoration scheme (automatic restoration of the system to normal configuration).

Instantaneous Phase (50P), and Neutral Overcurrent (50N) as fault detectors, can be used as inputs to the Transfer Scheme logic in order to block a transfer while a fault is present on the load side of the breaker. These elements block a transfer while a fault, which can cause a severe voltage dip, is present on the load side of the breaker. This fault is cleared by Time Overcurrent protection on the incomer or an upstream breaker. The 50P element is set above the maximum current caused by either the bus motor contribution to an upstream fault, or the maximum current during low voltage conditions. The 50N element is be set to detect arcing ground faults, but allow permitted unbalances.

Fault detectors are required for Incomer 1 and Incomer 2 relays only.

Line Instantaneous Undervoltage is required to block Transfer initiation from the other relay, as the other source is experiencing low voltage. In addition, Line Instantaneous Undervoltage is enabled by Instantaneous Overcurrent to block Transfer initiation. This ensures that if a fault on the load side of Bus 1 causes a dip below the Undervoltage Pickup setting, Transfer is not initiated until the voltage has risen above the voltage setting for the interval established by the Transfer Delay This Source setpoint. The Pickup setting is below the minimum expected normal (low) voltage, usually around 0.9 of the Pickup voltage. A Definite Time curve with the delay set to zero provides instantaneous operation. The minimum operating voltage must be set to zero.

Line Time Undervoltage is required to initiate a transfer on loss-of-source. Typical settings have a Pickup about 0.7 to 0.8 of pickup voltage, an “Inverse Time” curve setting, and a delay setting to provide operation in 0.7 to 1.4 seconds at 0 V. The minimum operating voltage must be set to zero.

Line Instantaneous Undervoltage and Line Time Undervoltage are required for Incomer 1 and Incomer 2 relays only.

Synchrocheck (25) is required to supervise the initial closing of the incoming breakers, to provide synchronism-check supervision when paralleling the buses, or to measure the residual voltage on the bus that has lost source.

It is imperative for Incomer 1 and Incomer 2 that the DEAD SOURCE PERMISSION setpoint be “LL & DB” (Live Line and Dead Bus) to allow initial closing of the incoming breakers. The user establishes all other setpoints for this element.

The Dead Source Permissive portion of the Bus Tie relay's Synchrocheck function is also used to measure the residual voltage on the bus that has lost source. To ensure that Transfers are supervised by the decayed voltage magnitude only, the SYNC 1(2) DEAD SOURCE PERMISSION is hardcoded for the Bus Tie relay. It is imperative that the DEAD SOURCE PERMISSION setpoint for Bus Tie Relay be either "DL OR DB" (Dead Line or Dead Bus) or "DL XOR DB" (Dead Line or Dead Bus, but not both) to allow for Transfers to either Incomer.

The DEAD BUS VOLTS MAXIMUM and DEAD LINE VOLTS MAXIMUM setpoints establish the level of decayed voltage above which Transfers are inhibited. A normal setting for this element is about 0.25 of Pickup of nominal voltage. When the relay measures a single phase-phase voltage, these values should be multiplied by $1/\sqrt{3}$ to cover the case of a phase-ground fault on a measured phase reducing that phase voltage but leaving the other two phases at a higher voltage. If experience shows this setpoint causes a delay of transfer, presenting problems, it is occasionally raised to a maximum of 0.40 of Pickup. The user establishes all other setpoints for this element.

If breaker status is taken from Breaker function, it is necessary to set all digital inputs for that purpose.

The inputs needed for the Breaker Control function are required in order to define how the relay receives external commands.

1. The scheme design requires that the AC voltage connections for 'Line' and 'Bus' sources on the Incomer relays be in accordance with the Transfer Scheme One Line Diagram shown above.
2. The connection of AC voltage to the relay on the bus tie does not affect operation of the scheme.
3. The Output Relays used to send signals from one relay to the others (all breakers) must not be operated by any other feature of the relay.
4. The Inputs for Incomers 1 and 2 and the Bus Tie relays that are programmed, must match the wiring of the relays. It is necessary that the specific Inputs be programmed as per the logic diagrams, and that field connections must match their specific functions within the Transfer Scheme.

11.17.5 ATS WIRING DIAGRAMS

The following diagrams show an example of three relays used for Auto-transfer scheme.

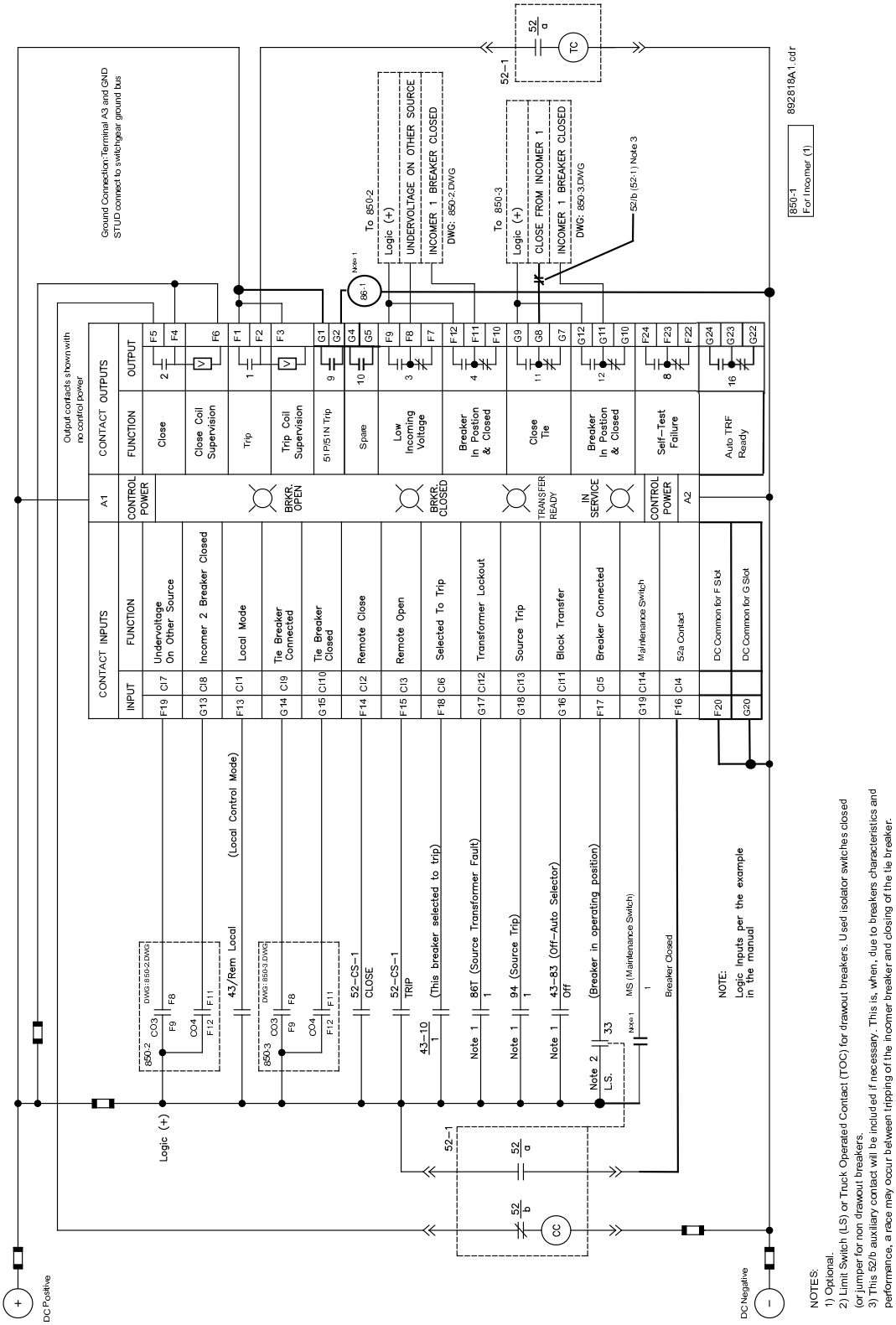

Figure 284: 850-For Incomer (1) Wiring Diagram

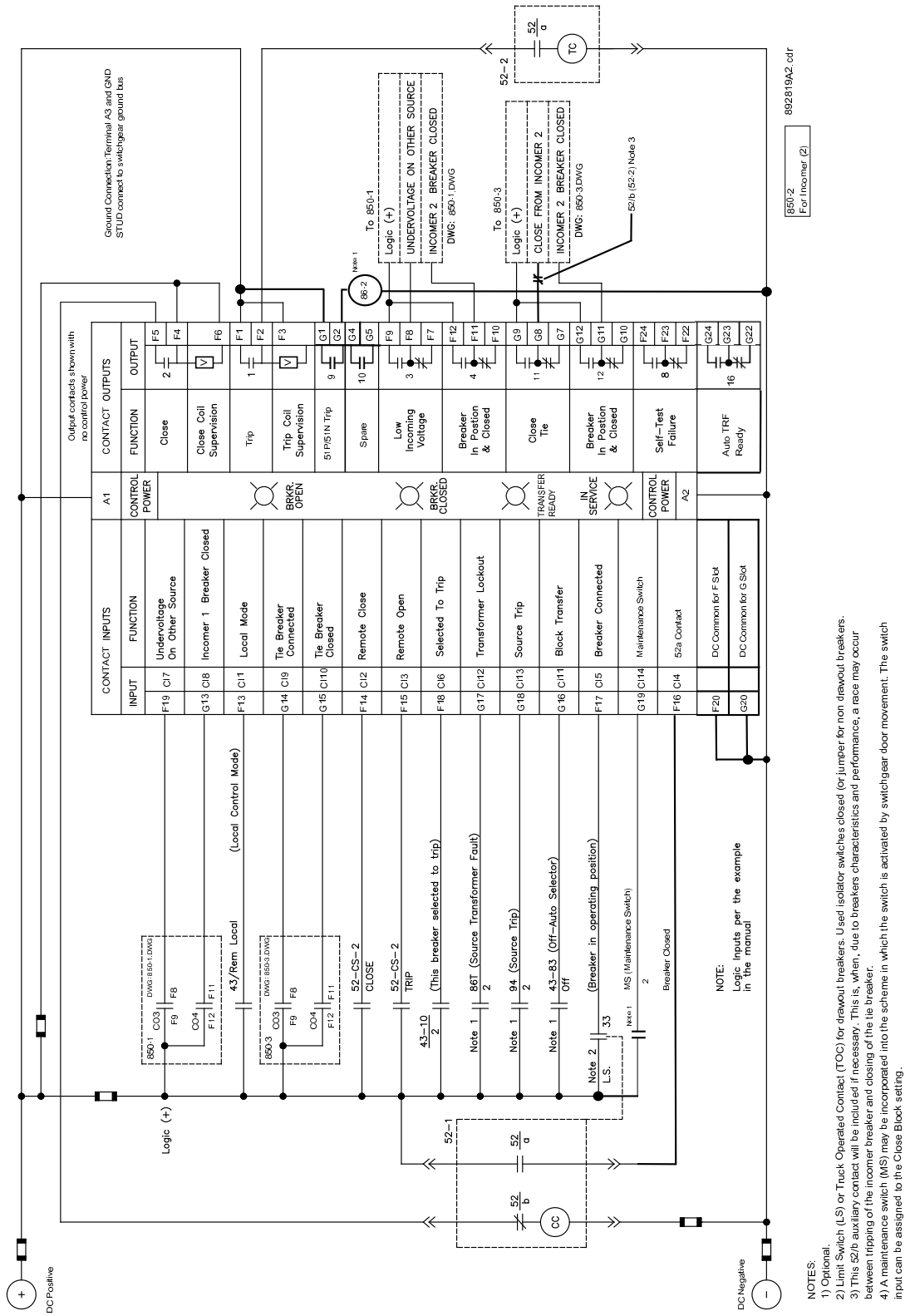

NOTES:
1) Optional.
2) Limit Switch (LS) or Truck Operated Contact (TOC) for drawout breakers. Used isolator switches closed (or jumper for non drawout breakers-
3) This 52/b auxiliary contact will be included if necessary. This is, when, due to breakers characteristics and performance, a race may occur between tripping of the incomer breaker and closing of the tie breaker.
4) A maintenance switch (MS) may be incorporated into the scheme in which the switch is activated by switchgear door movement. The switch input can be assigned to the Close Block setting.

Figure 285: 850-For Incomer (2) Wiring Diagram

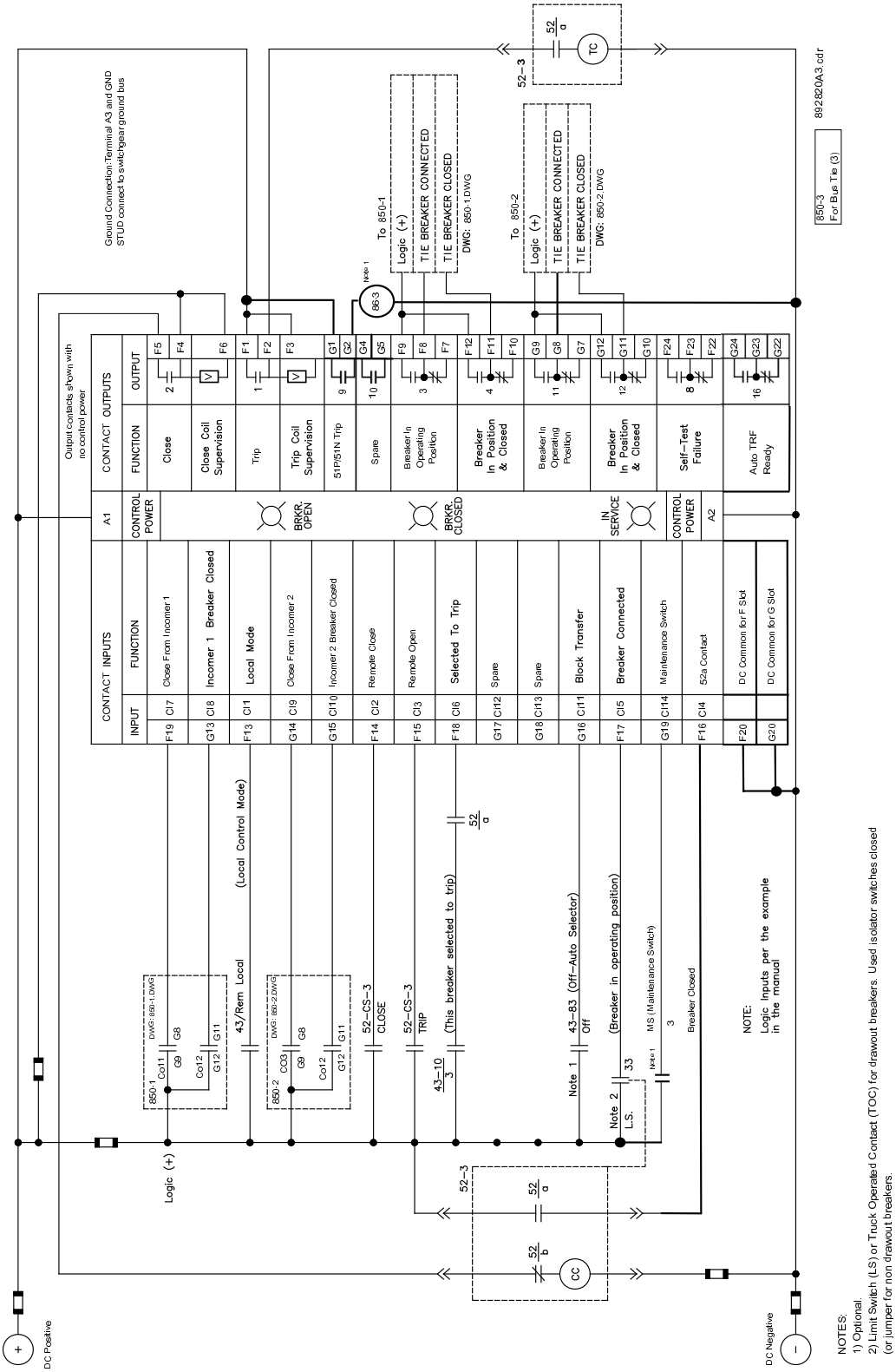

Figure 286: 850-3 For Bus Tie (3) Wiring Diagram

11.18 AUTORECLOSE

The relay provides up to two Autoreclose (AR1) elements. The Autoreclose scheme provides flexibility that allows the application of many typical distribution and subtransmission control strategies.

Up to four reclosing shots with separately programmable dead times can be set for each shot. Reclosing can be initiated from any Overcurrent element, or from external sources. Overcurrent protection setpoints can be adjusted between reclosing shots in order to co-ordinate with downstream devices. To prevent breaker wear, a Current Supervision feature can reduce the number of shots when the fault current is high. A zone co-ordination feature is provided for protection coordination with downstream reclosers. Inputs for blocking and disabling the scheme are available.

Front panel LEDs indicate the present state of the Autoreclose scheme:

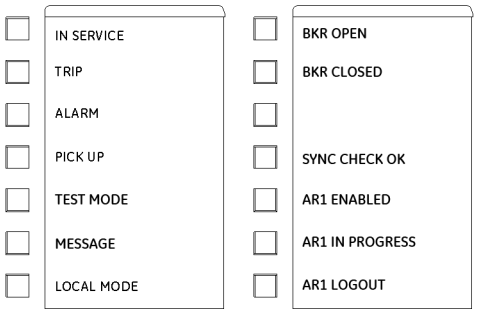

1. Reclosure Enabled: The scheme is enabled and may reclose if a Trip occurs.
2. Reclosure in Progress: An Autoreclosure has been initiated but the breaker has not yet been closed.
3. Reclosure Lockout: The scheme has generated the maximum number of breaker closures allowed and, as the fault persists, will not close the breaker again. The scheme has gone to ‘Lockout’ and must be reset before further reclosures are permitted. So, when maximum shot count is reached followed by breaker open condition, the scheme is sent into Lockout. The scheme may also be sent into Lockout when the incomplete sequence timer times out or when a block/cancel or breaker failure signal occurs while in ‘Reclose in Progress’. If enabled, the Lockout from the Rate Supervision function or the Lockout from the Zone Coordination function may also send the scheme to Lockout. The scheme must be reset from Lockout in order to perform a Reclose for further faults. The scheme will also be sent into Lockout during the dead-time period (i.e. when the recloser is open following a trip awaiting a configured duration time before it closes) if a manual close command is given.

Note:
STATUS / AUTORECLOSE 1 can also be accessed to determine the present state of the Autoreclose scheme.

The scheme is considered enabled when all of the following four conditions are true:

1. The AR1 FUNCTION setpoint is enabled.
2. AR1 BLOCK/CANCEL input function is not asserted.
3. The scheme is not in the Lockout state.
4. The AR1 Block Time Upon Manual Close timer is not active.

The Autoreclose scheme is initiated by a Trip signal from any selected protection feature operand or by external initiation. The scheme is initiated provided the circuit breaker is in the CLOSED state before protection operation.

The Reclose-In-Progress (RIP) is set when a reclosing cycle begins following a Reclose Initiate signal. Once the cycle is successfully initiated, the RIP signal will seal-in and the scheme will continue through its sequence until one of the following conditions is satisfied:

1. The Close signal is issued when the dead timer times out
2. The scheme goes to Lockout
3. The scheme is Blocked / Canceled.

While RIP is active, the scheme checks that the breaker opens and the shot number is below the limit; it then begins measuring the dead time.

A fault occurs resulting in an Overcurrent element tripping the circuit breaker and initiating a reclosure. Once the breaker is detected open a Dead Timer'is started. Once this timer exceeds the value programmed for the AR1 DEAD TIME 1 setpoint and the additional timer exceeds the value programmed for the AR1 DELAY (AR1 ADD DELAY has to be ON), the shot counter is incremented and a breaker closure is initiated using the Close output #2 contact. At the same time, the Overcurrent element characteristics are modified (blocking or increasing Pickup) according to the Reclosure 1 setpoints.

If the fault is permanent, subsequent Overcurrent element(s) Trip and initiate Reclose. The scheme eventually goes to Lockout when the AR1 MAXIMUM NUMBER SHOTS has been reached and another Trip occurs. If a breaker failure condition is detected at any time during operation, the scheme goes straight to Lockout. When in Lockout, the relay disables the Reclose scheme and returns all protection setpoints to their initial values. To re-enable the Autoreclose scheme, the Lockout must be reset via manual reset (including front panel, communication, FlexLogic), by AR1 RST LOCKOUT ON MANUAL CLS or by AR1 RST LOCKOUT IF BKR CLOSED (after AR1 RST LOCKOUT DELAY times out).

If the fault is transient in nature then no Overcurrent element(s) operate after the breaker has closed. The scheme automatically resets when the reset timer, started upon the first Reclosure initiation, exceeds the AR1 RESET TIME setpoint value. This Autoreclosure reset returns the shot counter to zero.

Each of the four possible shots has an independently settable dead time. One additional timer can be used to increase the initial set dead times 1 to 4 by a delay equal to AR1 DELAY. This offers enhanced setting flexibility using FlexLogic operands to turn the additional timer on and off. These operands may possibly include AR1 SHOT CNT n, SETTING GROUP 1 ACTIVE, etc. The Autoreclose provides a maximum of 4 selectable shots. Maximum number of shots can be dynamically modified through the settings AR1 REDUCE MAXIMUM TO 1 (2, 3), using the appropriate FlexLogic operand or automatically by the Current Supervision function.

Scheme Lockout blocks all phases of the reclosing cycle, preventing automatic reclosure, if any of the following occurs:

1. The Shot Counter is equal to or greater than the configured maximum number. This occurs, for example, when SKIP SHOT is being asserted during the AR-in-Progress state.
2. The Shot Counter is equal to or greater than the configured maximum number and another trip occurs. This occurs, for example, when all reclosing attempts are unsuccessful or the Shot Counter has been driven to the last shot by TO LAST SHOT being asserted.
3. The Shot Counter is equal to or greater than the configured maximum number and one dead timer is running. This occurs, for example, when the maximum shot number is reduced using the setting Reduce Maximum to n.
4. When the Reset timer is running after breaker closing; and subsequent trip causes opening the Breaker without initiating AR scheme.
5. During the dead time of the AR scheme, if a manual close command is initiated in error as a closing operation.
6. The Incomplete Sequence Timer times out.
7. A 'Block/Cancel' input or Breaker Failure are in effect (e.g. external breaker failure or bus differential protection operates, etc.) while AR is in progress.
8. If enabled, the Lockout from the Zone Coordination function may also send the scheme to Lockout.
9. When the Close Failure Timer times out, if enabled.

The Recloser is latched in the Lockout state until a Reset from Lockout signal is asserted, either from a manual close of the breaker, a reset if breaker is closed, or from a manual reset command (local or remote). The 'Reset from Lockout' can be accomplished by operator command, by manually closing the breaker, or whenever the breaker has been closed and has stayed closed for a preset time.

After the dead time elapses, the scheme issues the CLOSE signal. The CLOSE signal is latched until the breaker closes or the scheme goes to Lockout. A reset timer output resets the Recloser following a successful Reclosure sequence. The reset time is based on the breaker Reclaim Time which is the minimum time required between successive Reclose sequences.

Path: ***Setpoints*** > ***Control*** > ***Autoreclose 1(X)***

The Autoreclose (AR1) element has six sub-menus of setpoints:

- SETUP
- INITIATE
- SHOT
- RATE SUPERVISION
- CURRENT SUPERVISION
- ZONE COORDINATION

11.18.1 AUTORECLOSE SETUP

Path: ***Setpoints*** > ***Control*** > ***Autoreclose 1(X)*** > ***Setup***

The setpoints shown above define the general characteristics of the scheme. The FUNCTION and MAXIMUM NUMBER SHOTS setpoints are critical and must be set appropriately.

> *Note:*
> ***For an Overcurrent element to initiate a Reclosure it must be programmed in the INITIATE submenu.***

FUNCTION

Range: Disabled, Enabled

Default: Disabled

MAXIMUM NUMBER SHOTS

Range: 1, 2, 3, 4

Default: 1

The setpoint specifies the number of reclosures that can be attempted before it goes to Lockout in the event that the fault is permanent. The dead time and Overcurrent characteristics for each reclosure shot are entered in the subsequent setpoints groups AR1 RECLOSE SHOT 1 to AR1 RECLOSE SHOT 4.

BLOCK / CANCEL

Range: Off, Any FlexLogic operand

Default: Off

The Autoreclose is blocked when the selected operand or input is asserted. The selected operand or input blocks the Autoreclose initiate (this can be bus differential protection, breaker failure, etc.).

MANUAL CLOSE

Range: Off, Any FlexLogic operand

Default: Off

The setpoint selects the FlexLogic operand, digital input, virtual input or remote input set when the breaker is manually closed and has changed state from OPEN to CLOSE. For applications where the breaker may be closed directly, without using the relay to provide the closing signal to the breaker, this setpoint uses, for example, FlexLogic for the detection of the breaker going from the OPEN state to the CLOSED state (the breaker state has to be determined by the 52a/b contact inputs) to determine if a manual CLOSE has occurred. The relay uses the detection of a manual CLOSE to disable the Autoreclose scheme to prevent reclosing on to a fault.

Also, if the Autoreclose scheme is in the Lockout state, a successful manual CLOSE results in the Autoreclose scheme being reset if setpoint RST LOCKOUT ON MANUAL CLS is set to ON, and Autoreclose is enabled after the BLK TIME UPON MANUAL CLS time has expired.

When set to OFF, only CLOSE commands sent via the front panel is considered to be a manual CLOSE for the Autoreclose scheme logic.

BLK TIME UPON MANUAL CLS

Range: 0.000 to 6000.000 s in steps of 0.001 s

Default: 10.000 s

The Autoreclose scheme is disabled for a programmable time delay after the breaker is manually closed. This prevents reclosing on to a fault after a manual CLOSE. This delay must be longer than the slowest expected Trip from any protection not blocked after manual closing. The timer starts timing when the timer input drops out. After a manual CLOSE and when this timer expires, the Autoreclose scheme is automatically reset if setpoint RST LOCKOUT ON MANUAL CLS is set to ON. The Lockout is cleared and the shot counter is set to 0.

RST LOCKOUT ON MANUAL CLS

Range: Off, On

Default: Off

The setpoint allows the Autoreclose scheme to be reset from Lockout if the breaker is manually closed, regardless of whether the breaker remains closed or not. This setting overrides RST LOCKOUT IF BKR CLOSED.

RST LOCKOUT IF BKR CLOSED

Range: Off, On

Default: Off

The setpoint allows the Autoreclose scheme to be reset from Lockout if the breaker has been manually closed and stays closed for a pre-set time. In order for this setting to be effective RST LOCKOUT ON MANUAL CLS should be disabled.

RST LOCKOUT DELAY

Range: 0.000 to 6000.000 s in steps of 0.001 s

Default: 60.000 s

The setting establishes how long the breaker stays closed after a manual CLOSE command, in order for the Autorecloser to reset from Lockout.

MANUAL RESET FROM LOCKOUT

Range: Off, Any FlexLogic operand

Default: Off

The setpoint selects the FlexLogic operand, digital input, virtual input or remote input that resets the Autoreclose scheme from the Lockout condition. Typically this is a local or remote manual reset from Lockout.

ADD DELAY

Range: Off, Any FlexLogic operand

Default: Off

The setting selects the FlexLogic operand, digital input, virtual input or remote input that introduces an additional delay to the initially set Dead Times (1 through 4). When this setting is OFF, the delay is by-passed.

DELAY

Range: 0.000 to 6000.000 s in steps of 0.001 s

Default: 0.000 s

The setting establishes the extent of the additional Dead Time delay.

INCOMPLETE SEQUENCE TIME

Range: 0.000 to 6000.000 s in steps of 0.001 s

Default: 5.000 s

The timer defines the maximum time interval allowed for a Recloser operation (open or close). It is started whenever a Reclosure is initiated (to open or close) and resets when the expected state change is successfully detected. If recloser breaker does not operate (i.e. doesn't close after AR close or doesn't open after AR initiate) upon expiration of this timer, the scheme goes to Lockout.

> *Note:*
> *This timer must be set to a delay less than the Reset timer.*

RESET TIME

Range: 0.000 to 6000.000 s in steps of 0.001 s

Default: 60.000 s

The Reset Time resets the recloser following a successful Autoreclose sequence. This setting is based on the breaker 'Reclaim Time' in a traditional scheme with fixed protection settings and is the minimum time required for the breaker to regain reclose cycle capability between successive Reclose sequences.This time also must be set to a value greater than the maximum time to Trip on each Reclose shot with a sufficient margin.

> *Note:*
> *Set the RESET TIME timer to a delay longer than the INCOMPLETE SEQUENCE timer.*

REDUCE MAXIMUM TO 1 (2 or 3)

Range: Off, Any FlexLogic operand

Default: Off

The setpoint selects the FlexLogic operand, digital input, virtual input or remote input that changes the maximum number of shots from the initial setting to 1, 2 or 3.

SYNCHROCHECK SUPERV

Range: Bypass, Sync1 Close Perm, Sync 2 Close Perm

Default: Bypass

The setpoint selects Synchrocheck supervision. A closing signal from the Autoreclose function can be supervised by the Synchrocheck function. The Synchrocheck function has to be enabled and set accordingly.

For applications where Synchrocheck and/or Dead Source check is not needed, supervision can be bypassed. If the Synchrocheck function is not selected in the order code, the setting is hidden and defaulted to Bypass.

Note:
If the supervision is not bypassed and Autoreclose is applied for an application where the breaker is located on radial feeders, or line is powered by one source only, the DEAD SOURCE PERM setpoint from the Synchrocheck menu shall not be disabled.

Note:
A Synchrocheck supervised Autoreclose CLOSE command is send directly to output #2. For other outputs, logic has to be created for supervision, if needed.

ENABLED OUTPUT RELAY 3 (X)

Range: Do Not Operate, Operate

Default: Do Not Operate

Selects the relays required to operate while Autoreclosure is enabled. The selected relays operate while the front panel Reclosure-enabled indicator is on.

IN PROGRESS OUTPUT RELAY X

Range: Do Not Operate, Operate

Default: Do Not Operate

Selects the relays required to operate while Autoreclosure is in progress. The selected relays operate while the front panel ‘Reclosure in Progress’ indicator is on. This indication is on when Autoreclose has been initiated, but the breaker is not closed and Autoreclose isn’t blocked. This output can be used to block the operation of a transformer tap changer during a Reclose sequence.

LOCKOUT OUTPUT RELAY X

Range: Operate, Do Not Operate

Default: Do Not Operate

Selects the relays required to operate when Autoreclose scheme goes to Lockout. No further circuit breaker closure is initiated until the Autoreclose Lockout is Reset. The selected relays operate while the front panel Reclosure Lockout indicator is on.

EVENTS

Range: Disabled, Enabled

Default: Enabled

PAGE 1 (AR1 SETUP)

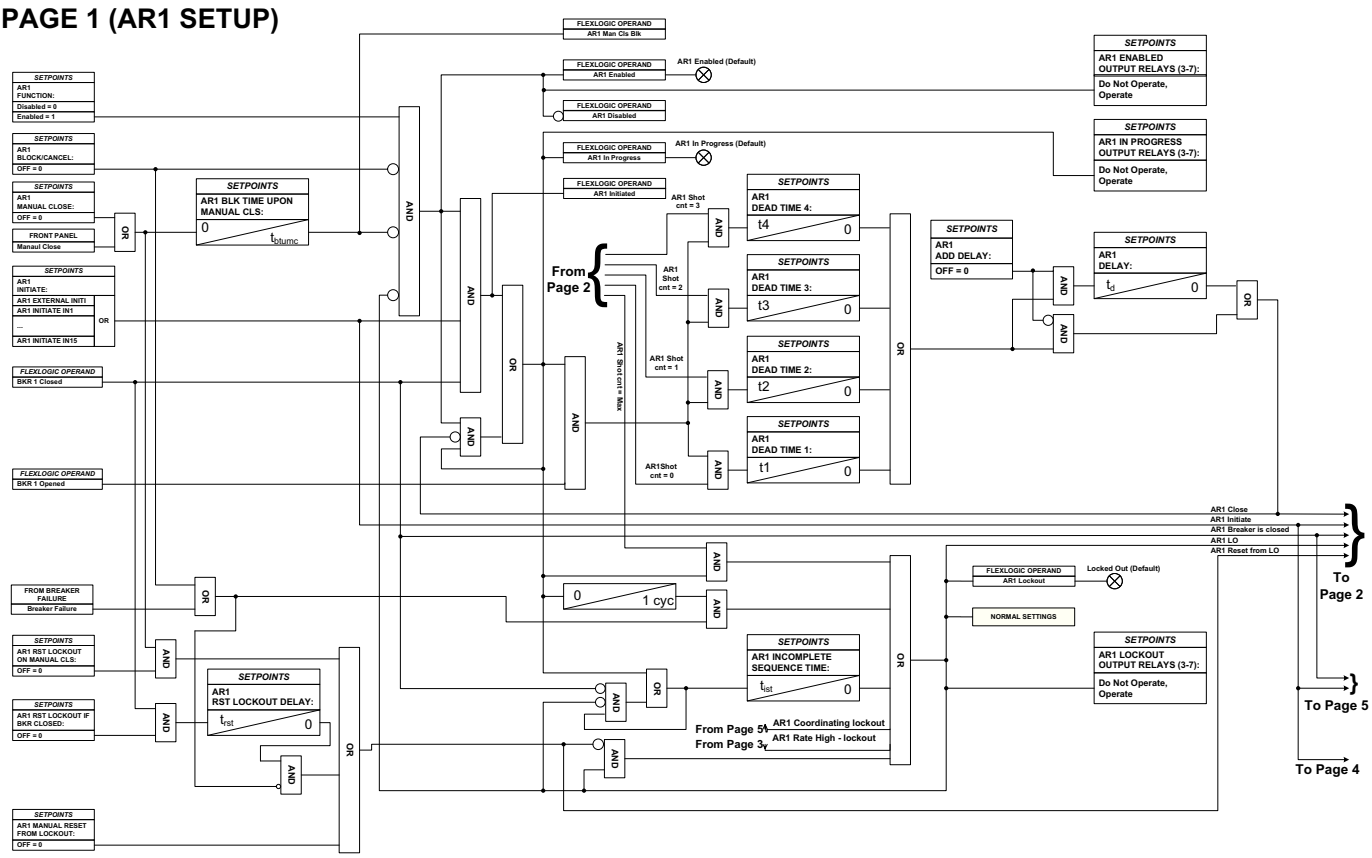

Figure 287: Autoreclose - AR1 Setup logic diagram page 1

PAGE 2 (AR1 SETUP)

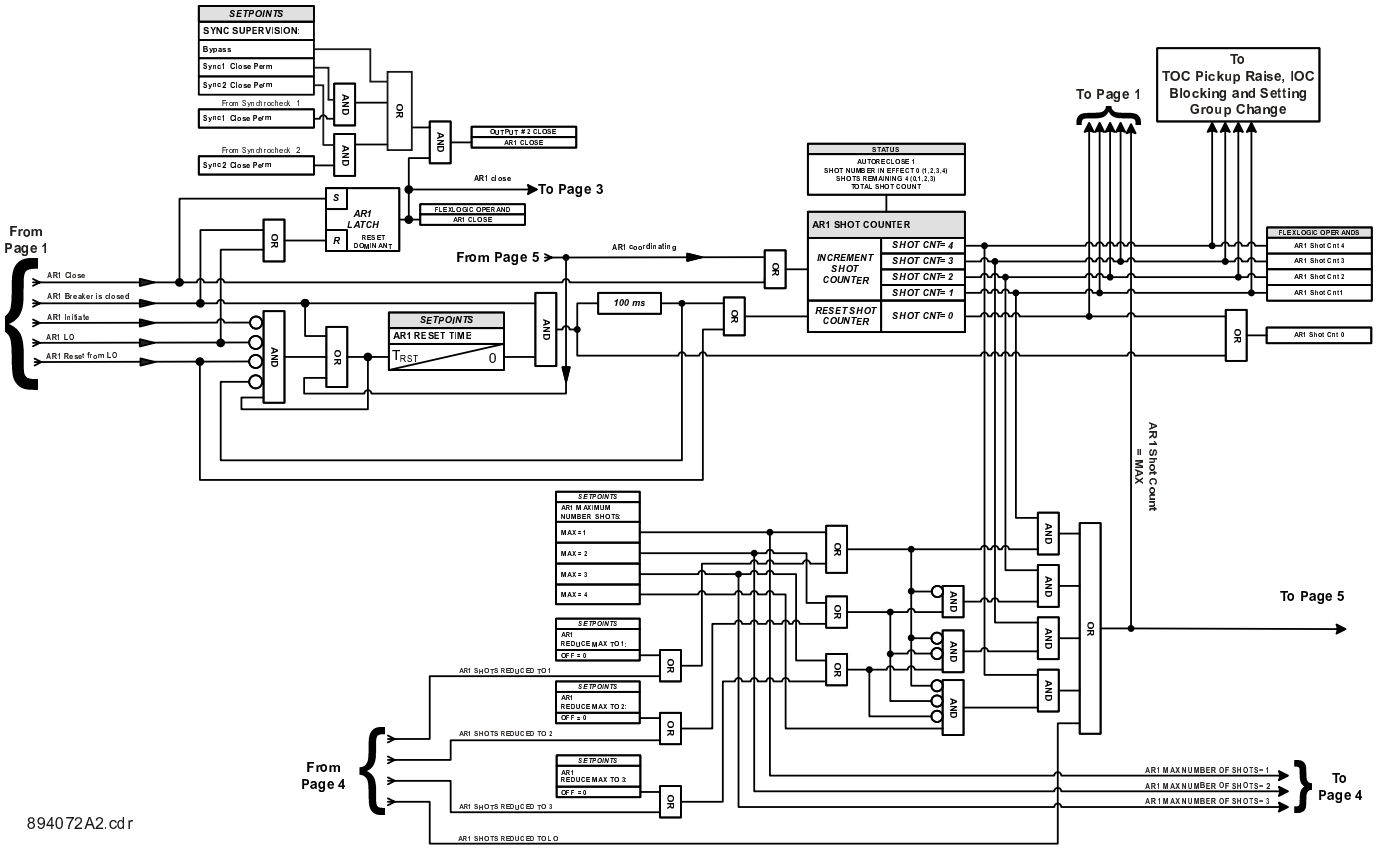

Figure 288: Autoreclose - AR1 Setup logic diagram page 2

11.18.2 AUTORECLOSE INITIATE

Path: ***Setpoints*** > ***Control*** > ***Autoreclose 1*** > ***Initiate***

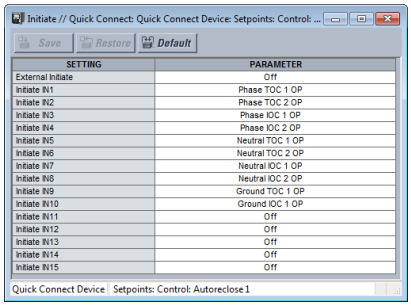

Initiate // Quick Connect: Quick Connect Device: Setpoints: Control: ...

Save | Restore | Default

SETTING	PARAMETER
External Initiate	Off
Initiate IN1	Phase TOC 1 OP
Initiate IN2	Phase TOC 2 OP
Initiate IN3	Phase IOC 1 OP
Initiate IN4	Phase IOC 2 OP
Initiate IN5	Neutral TOC 1 OP
Initiate IN6	Neutral TOC 2 OP
Initiate IN7	Neutral IOC 1 OP
Initiate IN8	Neutral IOC 2 OP
Initiate IN9	Ground TOC 1 OP
Initiate IN10	Ground IOC 1 OP
Initiate IN11	Off
Initiate IN12	Off
Initiate IN13	Off
Initiate IN14	Off
Initiate IN15	Off

Quick Connect Device | Setpoints: Control: Autoreclose 1

EXTERNAL INITIATE

Range: Off, Any FlexLogic operand

Default: Off

The setpoint selects the FlexLogic operand, digital input, virtual input or remote input that initiates the Autoreclose scheme; typically the Trip signals from external devices.

INITIATE IN1 (to IN15)

Range: Off, Any FlexLogic operand

Default: Ph TOC 1 OP

The setpoint selects the FlexLogic operand, digital input, virtual input or remote input that initiates the Autoreclose scheme; typically the Trip signals from internal protection functions.

Note:
The default setting includes the following protection functions:

- Ph TOC 1 OP
- Ph TOC 2 OP
- Ph IOC 1 OP
- Ph IOC 2 OP
- Ntrl TOC 1 OP
- Ntrl TOC 2 OP
- Ntrl IOC 1 OP
- Ntrl IOC 2 OP
- GND TOC 1 OP
- GND IOC 1 OP

11.18.3 AUTORECLOSE SHOT

Path: ***Setpoints*** > ***Control*** > ***Autoreclose 1(X)*** > ***Shot***

The AR1 RECLOSE SHOT 1 through 4 setpoints are programmed independently and are repeated for each of the Reclosure Shots 1 through 4. These setpoints determine the Dead Time for a given shot and the Overcurrent characteristics during that shot.

Caution:
Blocking on all enabled protection elements that are set to `Trip` or raising pickup level to the value causing protection operate time to be higher than the Reset time of the Autoreclosure for the last shot will result in failure to clear the fault and must be avoided. Doing this causes the relay to fail clearing the fault, and repeat the operation of the Autoreclosure function without reaching the lockout state.

Note:
Selections greater than the maximum number of shots programmed in the Autoreclose scheme setup are not used by the scheme.

DEAD TIME 1 (2, 3, 4)

Range: 0.100 to 6000.000 s in steps of 0.001 s

Default: 1.000 s (2.000/3.000/4.000 s for shot 2/3/4)

The setting specifies the Dead Time delay before each reclosure. These are the intentional delays before the first (second, third or fourth) automatic breaker reclosure, and should be set longer than the estimated deionized time following a three-pole Trip. There are four time-delay settings (one per each reclosure) to be configured and used to time out before the first (second, third or fourth) breaker reclosure.

BLOCK PHASE IOC 1 (2, 3, 4)

Range: Off, On

Default: Off

If set to ON for the selected shot(s), the operation of the PHASE IOC 1/2 protection element is blocked after the corresponding Recloser reclosing shot.

BLOCK NEUTRAL IOC 1 (2, 3, 4)

Range: Off, On

Default: Off

If set to ON for the selected shot(s), the operation of the NEUTRAL IOC 1/2 protection element is blocked after the corresponding Recloser reclosing shot.

BLOCK GROUND IOC 1 (2, 3, 4)

Range: Off, On

Default: Off

If set to ON for the selected shot(s), the operation of the GROUND IOC 1 protection element is blocked after the corresponding Recloser reclosing shot.

BLOCK SENS GROUND IOC 1 (2, 3, 4)

Range: Off, On

Default: Off

If set to ON for the selected shot(s), the operation of the SENSITIVE GROUND IOC 1 protection element is blocked after the corresponding Recloser reclosing shot.

BLOCK NEG SEQENCE IOC 1 (2, 3, 4)

Range: Off, On

Default: Off

If set to ON for the selected shot(s), the operation of the NEGATIVE SEQUENCE IOC 1 protection element is blocked after the corresponding Recloser reclosing shot.

RAISE PHASE TOC 1 (2, 3, 4) PKP

Range: 1 to 100% in steps of 1%

Default: 0

This setpoint determines the characteristics of the PHASE TOC 1/2 protection element by raising the Pickup level.

RAISE NEUTRAL TOC 1 (2, 3, 4) PKP

Range: 1 to 100% in steps of 1%

Default: 0

The setpoint determines the characteristics of the NEUTRAL TOC 1/2 protection element by raising the Pickup level.

RAISE GROUND TOC 1 (2, 3, 4) PKP

Range: 1 to 100% in steps of 1%

Default: 0

The setpoint determines the characteristics of the GROUND TOC 1 protection element by raising the Pickup level.

RAISE SENS GND TOC 1/2 PKP

Range: 0 to 100% in steps of 1%

Default: 0

The setpoint determines the characteristics of the SENSITIVE GROUND TOC 1 protection element by raising the Pickup level.

RAISE NEG SEQ TOC 1/2 PKP

Range: 0 to 100% in steps of 1%

Default: 0

The setpoint determines the characteristics of the NEGATIVE SEQUENCE TOC 1 protection element by raising the Pickup level.

SELECT SETTING GROUP

Range: Active, Group 1, 2, 3, 4, 5, 6

Default: Group 1

This setpoint determines the setting group that is used for AR1 Reclose Shot 1.

> *Note:*
> *The above setpoints are repeated for each of the Reclose shots 1 through 4.*

11.18.4 AUTORECLOSE RATE SUPERVISION

Path: ***Setpoints*** > ***Control*** > ***Autoreclose 1*** > ***Rate Supervision***

The Autoreclose Rate Supervision feature monitors the number of reclosures per hour. Once the number of reclosures within one hour exceeds the MAXIMUM RATE PER HOUR setpoint, the Autoreclose scheme raises an alarm or is sent to Lockout if the function is set for Lockout.

> *Note:*
> *If the scheme is sent to Lockout from the Rate Supervision function, the Lockout can be reset only if the rate per hour drops below the setpoint value or if the Rate Supervision data is cleared by EnerVista D&I Setup software.*

FUNCTION

Range: Disabled, Lockout, Alarm

Default: Disabled

The selection of the Lockout setting enables the Autoreclose Rate Supervision function Lockout. The selection of the Alarm setting enables the Autoreclose Rate Supervision function Alarm only.

MAXIMUM RATE PER HOUR

Range: 1 to 50 per hour in steps of 1

Default: 25

The setpoint specifies the number of Reclosures per hour that can be attempted before Reclosure goes to Lockout.

OUTPUT RELAY X

Range: Do Not Operate, Operate

Default: Do Not Operate

EVENTS

Range: Disabled, Enabled

Default: Disabled

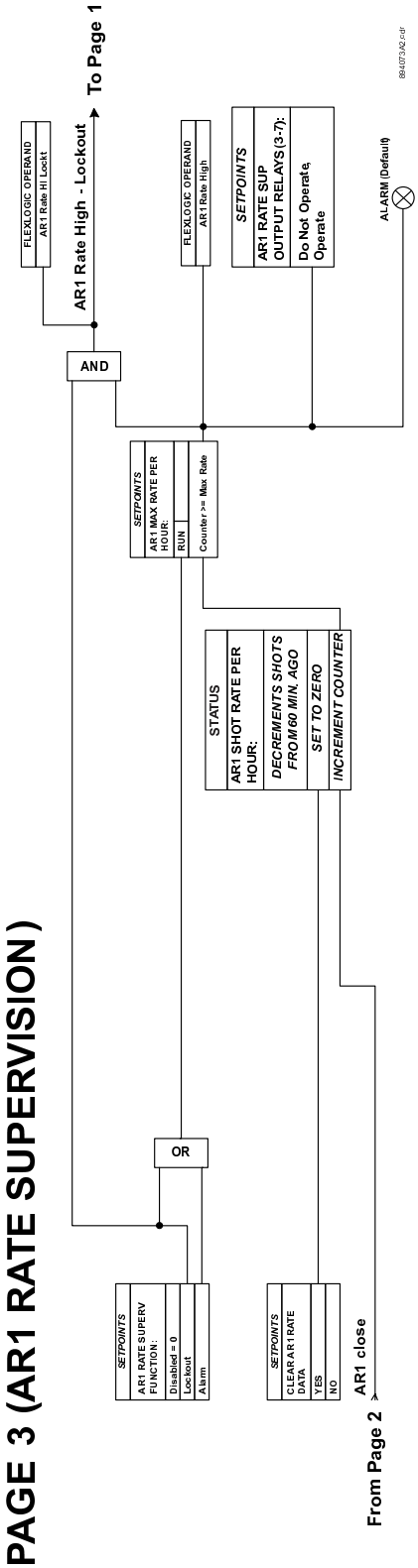

Figure 289: Autorecloser - AR1 Rate Supervision logic diagram page 3

11.18.5 AUTORECLOSE CURRENT SUPERVISION

Path: ***Setpoints*** > ***Control*** > ***Autoreclose 1*** > ***Current Supervision***

The Current Supervision feature is used to limit breaker wear. When a fault current exceeds user-programmed levels, it reduces the number of Reclose shots permitted. Once a Reclose sequence is initiated, the maximum current measured on any phase is compared to the setpoint current levels. The relay then determines the maximum number of shots allowed or whether the scheme goes immediately to Lockout. The lowest number of permitted shots, whether set by the MAX NUMBER OF RECLOSE SHOTS setpoint or the Current Supervision feature, always takes precedence unless Current Supervision takes the scheme to Lockout. Lockout has the highest priority. Once the Current Supervision feature has reduced the total number of shots, a subsequent shot can still reduce the limit further. The fault current level above which the number of Autoreclosure shots will be reduced to one, two, or three shots can be selected. If the Autoreclose scheme is to be taken directly to Lockout without reclosing, enable the ***TO LOCKOUT*** setpoint.

FUNCTION

Range: Disabled, Enabled

Default: Disabled

SIGNAL INPUT

Range: dependent upon the order code

Default: CT Bank 1-J1

This setting provides selection of three-phase current input source for current supervision.

> *Note:*
> *Since AR1 applies to BKR1, and AR2 applies to BKR2, the user must select the CT bank that is associated with the breaker to which the autoreclosure applies.*

3 SHOTS FOR CURRENT ABOVE

Range: 0.050 to 30.000 x CT in steps of 0.001 x CT

Default: 17.000 x CT

The setpoint specifies fault current level, which, when exceeded, reduces the permitted number of Reclose shots to 3.

2 SHOTS FOR CURRENT ABOVE

Range: 0.050 to 30.000 x CT in steps of 0.001 x CT

Default: 18.000 x CT

The setpoint specifies fault current level, which, when exceeded, reduces the permitted number of Reclose shots to 2.

1 SHOT FOR CURRENT ABOVE

Range: 0.050 to 30.000 x CT in steps of 0.001 x CT

Default: 19.000 x CT

The setpoint specifies fault current level, which, when exceeded, reduces the permitted number of Reclose shots to 1.

LOCKOUT FOR CURRENT ABOVE

Range: 0.050 to 30.000 x CT in steps of 0.001 x CT

Default: 20.000 x CT

The setpoint specifies the fault current level, which, when exceeded, sets the Shot Counter to maximum and with Reclosure initiates taking the scheme to Lockout without reclosing. For this setting to take effect Current Supervision to Lockout must be enabled.

LOCKOUT

Range: Disabled, Enabled

Default: Disabled

The selection of the Enabled setting enables Current Supervision to Lockout if the fault current exceeds the specified level.

EVENTS

Range: Disabled, Enabled

Default: Enabled

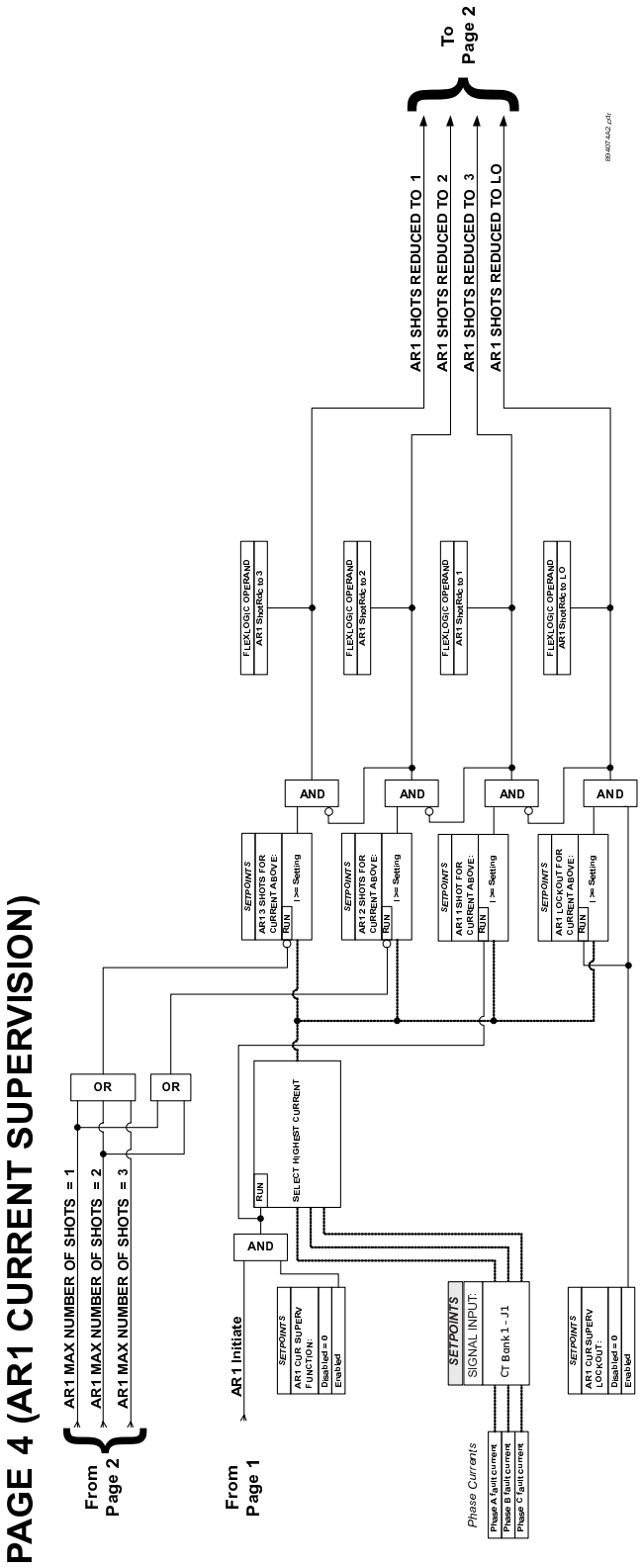

Figure 290: Autorecloser - AR1 Current Supervision logic diagram (page 4)

11.18.6 ZONE COORDINATION

Path: ***Setpoints*** > ***Control*** > ***Autoreclose 1*** > ***Zone Coordination***

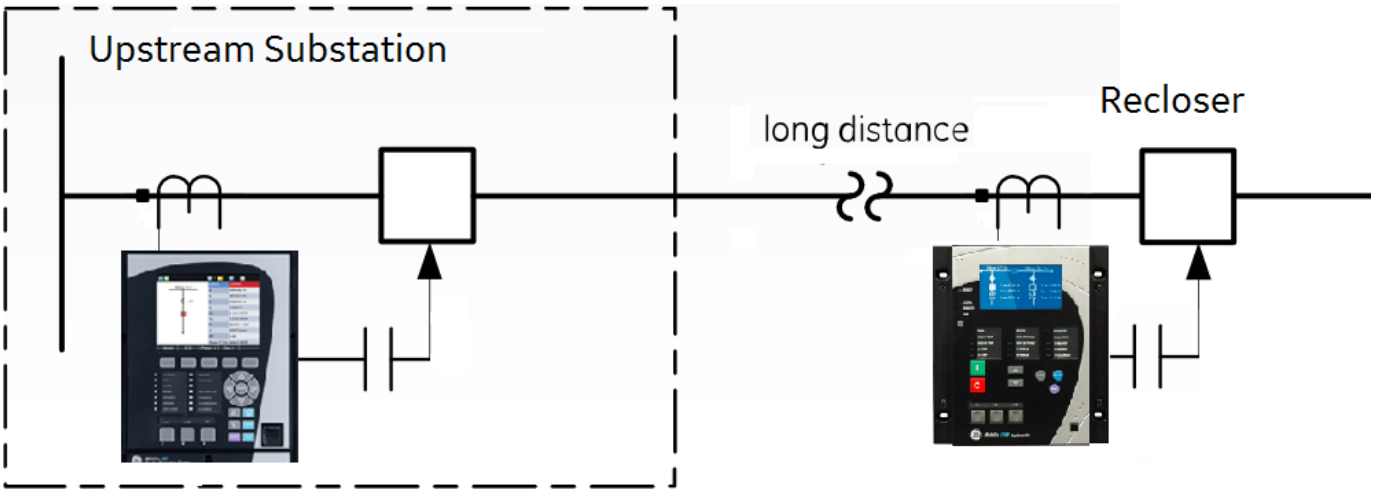

The Autoreclose scheme can be programmed to maintain the coordination of sequence and Overcurrent elements with a downstream recloser or sectionalizer as shown above. If a downstream recloser or sectionalizer is programmed to use different protection settings for different Reclose shots, it may be necessary to change the protection setpoints each time the recloser operates. To ensure that protection coordination is maintained, each relay reclosure shot must be coordinated with each downstream recloser shot. In addition, the 850 Reclose shot counter must always match the recloser shot counter. When a fault occurs downstream of the recloser and the feeder breaker does not Trip and Reclose, the reclosure shot counter is incremented. This external Reclose detection eliminates the need for inter-relay communications specially when the recloser is located far from the substation.

Once enabled, this scheme assumes an external reclose operation has occurred when the phase or neutral current exhibits an increase in magnitude, due to a fault, followed by a decrease in magnitude, due to a recloser opening for fault clearance. After the first detection of an external Reclose, the shot counter is incremented by one and the Autoreclose scheme Reset Timer is initiated. If needed, protection setpoint groups can be changed as shown in the figure. Both the upstream and downstream relays should be programmed with the same number of shots to lockout and number of trips before protection is blocked. This will ensure that for a persistent downstream fault, both relays will be on the same sequence count and will block protection at the same time.

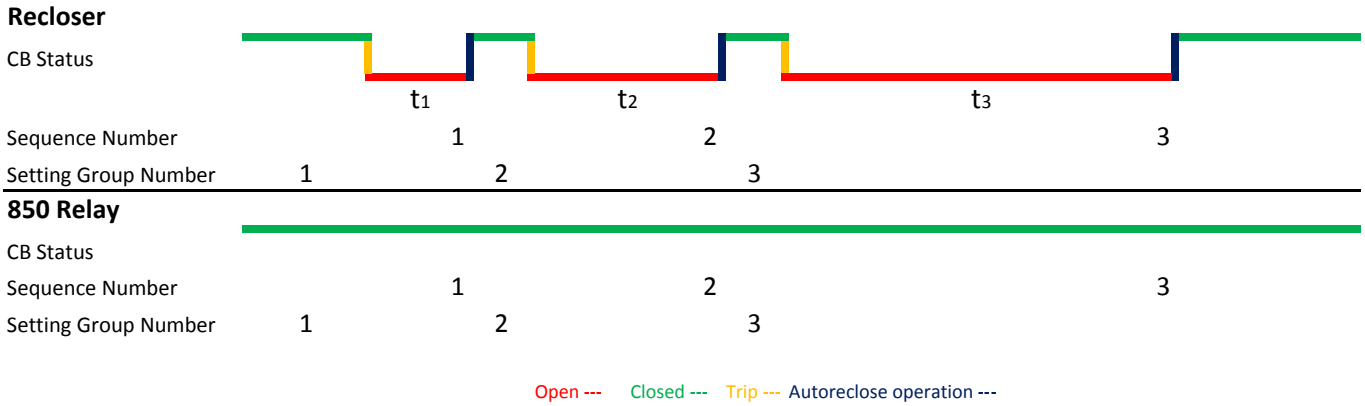

Figure 291: Using Protection Setpoint groups with the Recloser

If the fault is permanent and the recloser continues to Trip and Reclose, the coordination feature continues to increment the shot counter. If this continues to the maximum number of shots , the Autoreclose scheme goes to Lockout. If the fault is transient, then the Autoreclose scheme and shot counter are reset by the normal reset mechanism.

For correct operation of the coordination scheme, the instantaneous protection elements must be set to have time delays longer than the maximum fault clearing time of the downstream recloser. In addition, the Autoreclose reset timer must be set longer than the maximum time for the recloser to reach Lockout.

FUNCTION

Range: Disabled, Enabled

Default: Disabled

SIGNAL INPUT

Range: dependent upon the order code

Default: CT Bank 1-J1

This setting provides the selection for three-phase current input used for deriving the phase and neutral currents.

PHASE CURRENT PICKUP

Range: 0.050 to 30.000 x CT in steps of 0.001 x CT

Default: 1.000 x CT

The setpoint specifies phase fault current level, which when exceeded, signifies a downstream fault.

> *Note:*
> *These currents may be quite low for an end fault on a long feeder with a weak source.*

NEUTRAL CURRENT PICKUP

Range: 0.050 to 30.000 x CT in steps of 0.001 x CT

Default: 0.300 x CT

The setpoint specifies neutral fault current level, which when exceeded, signifies a downstream fault.

PICKUP TIME

Range: 0.000 to 6000.000 s in steps of 0.001 s

Default: 0.020 s

If the (phase or neutral) fault current exists for more than the Coordination Pickup Time scheme, an increase in fault current magnitude is declared.

DROPOUT TIME

Range: 0.000 to 6000.000 s in steps of 0.001 s

Default: 0.020 s

If the (phase or neutral) fault current drops, the downstream Reclose opening is declared for the duration of Coordination Dropout Time.

EVENTS

Range: Disabled, Enabled

Default: Enabled

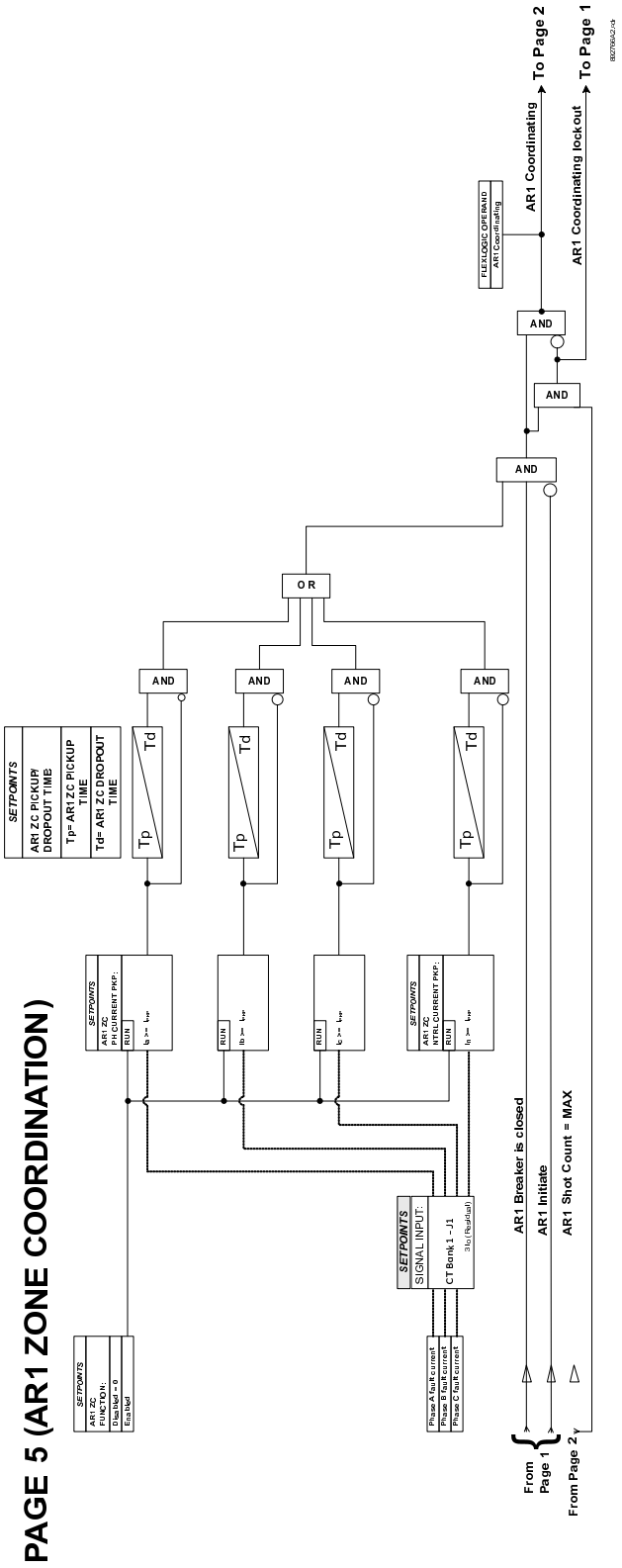

Figure 292: Autoreclose - AR1 Zone Coordination (page 5)

11.19 CT SUPERVISION

A CT Failure, an open CT secondary wire, or a loose connection on one phase of the 3-phase CT bank wiring may result in no current getting to one of the phases of the relay. This may lead to misinterpretations due to a rise in negative and zero sequence current quantities. Some of the key elements that can be affected are differential protection, restricted ground fault, neutral overcurrent, and negative sequence instantaneous elements. The CT Supervision function is designed to detect problems with current transformers before other elements have a chance to trip on false current signal information.

The relay provides a CT Supervision element that uses three distinct checks that can be enabled or disabled individually once the overall function is enabled. These three checks are sequence check, differential check, and symmetry check.

The sequence check is the first check and should ideally be used for CT supervision. The sequence check uses zero sequence current, zero sequence voltage, and ground current. This check may not be an option if the ground current is not available, voltages are not available, or not connected in wye configuration to be able to calculate zero sequence voltage. If voltages are not available or they are available but in delta configuration, the differential check can be used.

The differential check uses calculated zero sequence current and ground current to calculate differential current. If ground current is not available, the symmetry check can be used.

The symmetry check operates by calculating a quotient or a ratio of minimum current over maximum current and comparing against a threshold. This function should be set appropriately considering possible minimum and maximum load currents occurred in various scenarios.

To further enhance the security of these functions and not block overcurrent in case of fault events, an additional maximum load current supervision is added where the maximum of the phase current magnitudes **Imax** must be less than the maximum load current **ILmax**

Sequence Check

In a normal balanced condition, the zero sequence and negative sequence components are absent or within tolerances. When one of the phases of current disappears, the zero sequence component of both voltages and currents are checked along with the measured ground current. If the zero sequence current magnitude **3I0** is above the pickup value and either of **3V0** or Ig is above the pickup value, the element is not under a CT failure condition. If the **3I0** is higher than pickup and neither of **3V0** or Ig are higher than the pickup, the element is in CT failure condition.

Note:
All CT supervision uses J2-3V_0 for the sequence check.

	Healthy System	CT Failure (B phase)
$3I_0 = \lvert\overrightarrow{I_A} + \overrightarrow{I_B} + \overrightarrow{I_C}\rvert$ $3V_0 = \lvert\overrightarrow{V_A} + \overrightarrow{V_B} + \overrightarrow{V_C}\rvert$	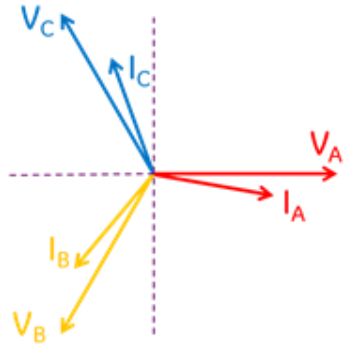	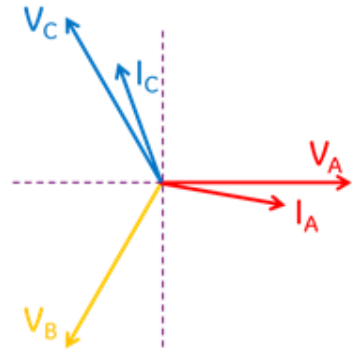
	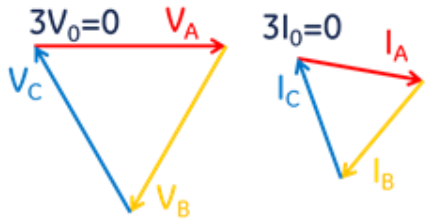	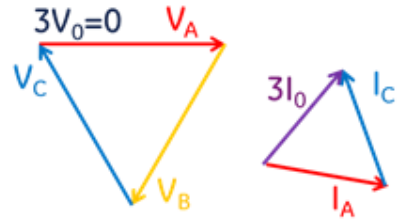

Note:
The ground current input for sequence check must come from a core balance CT or a transformer neutral point grounding CT. A Residual ground input method should not be used for sequence check. Refer to the following figure, Sequence Check Ground Inputs.

Sequence Check Ground Inputs		
USE (Preferred)	USE	DO NOT USE
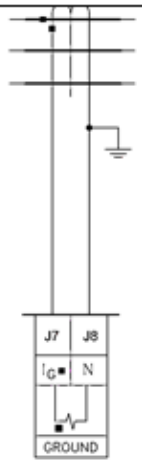	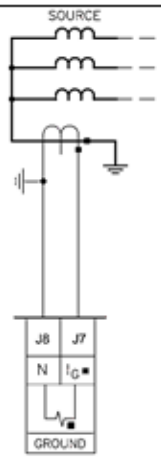	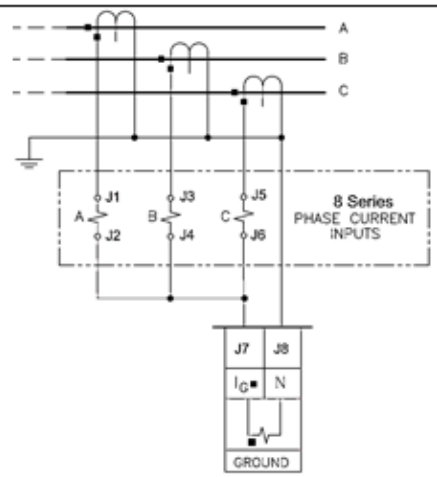
Core Balance CT Ground Input	Transformer Neutral Point CT Ground Input	Residual Ground Input

Differential Check

Under normal load and balanced conditions, the ground current measured from the ground CT should theoretically be equal to the calculated neutral current (3I0). In such condition, the total current difference **ICTSdiff** should be zero.

$$\overrightarrow{3I_0} = \overrightarrow{I_A} + \overrightarrow{I_B} + \overrightarrow{I_C}$$

$$I_{CTSdiff} = \left|\overrightarrow{3I_0} - \overrightarrow{I_G}\right| = 0$$

If the CTS Diff. Current goes above the set minimum permitted value ***Setpoints*** > ***Monitoring*** > ***CT Supervision*** > ***Diff. Current PKP*** (**ICTSdiff**), it can be concluded that the fault is either in the ground current path CT or in one of the phase current path CTs. A dynamic correction factor or a Slope ***Setpoints*** > ***Monitoring*** > ***CT Supervision*** > ***Slope*** is used to compensate for higher CT errors at higher currents. With higher currents, a higher total difference is tolerated. However, an additional maximum load current supervision check is added to limit the CT failure detection during real fault conditions.

$$I_{CTSdiff} > Slope * I_{max} + PKP$$

$$where\ I_{max} < I_{Lmax}$$

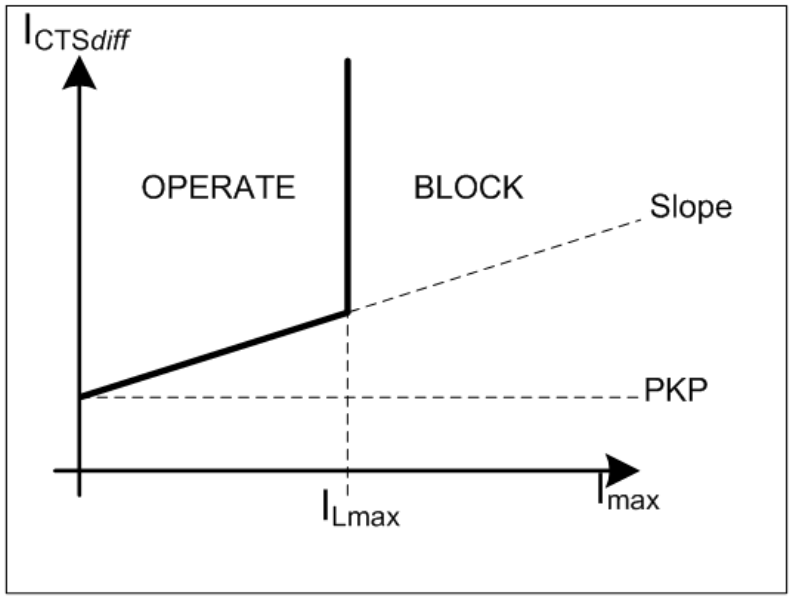

Figure 293: Differential Check characteristics

An additional setting ***Setpoints*** > ***Monitoring*** > ***CT Supervision*** > ***Diff. IG*** Polarity is provided which allows changing the Core Balance CT polarity if the connections are reversed. The setting can be changed after verifying the wiring of both Phase CTs and Core Balance CT. If both Phase CT (I_0) and Core Balance CT (IG) are of the same polarity, the Diff. IG Polarity setting can be set to “Same”. If the CT polarities are opposite, the Diff. IG Polarity setting can be set to `Reverse`. The CTS Diff Current metering value can be used for further verification. The figure below shows an example of ground CT connection and the Diff. IG Polarity setting for it.

> *Note:*
> *The CT Supervision element ground current input must come from a core balance CT. The Transformer neutral point grounding or residual ground input method should not be used for differential check.*

Differential Check Ground Inputs		
Diff. IG Polarity = Same (|3I0-IG|)	DO NOT USE	DO NOT USE
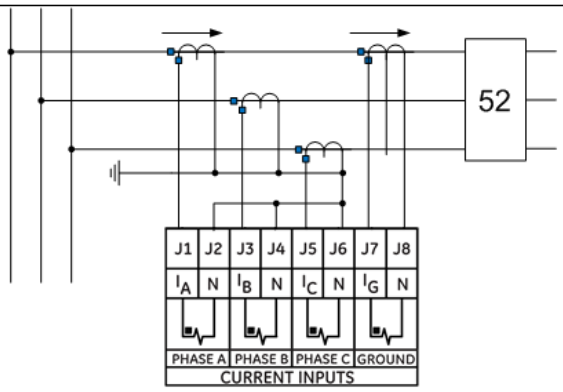	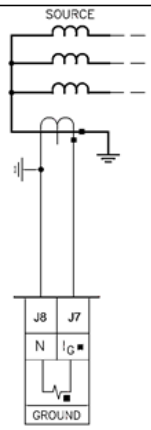	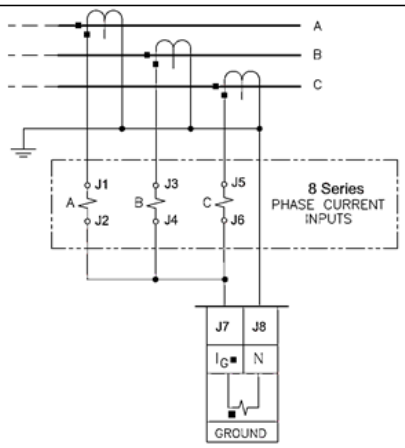
Core Balance CT Ground Input	Transformer Neutral Point CT Ground Input	Residual Ground Input

Symmetry Check

The symmetry check continuously calculates the quotient Q between measured minimum and maximum phase current magnitudes. Under normal balanced load conditions, this value is close to unity. If the quotient falls below the set minimum permitted value ***Setpoints*** > ***Monitoring*** > ***CT Supervision*** > ***Sym. Quotient PKP*** ($Q_{min,perm}$), it can be concluded that there is a fault in one or more phase current paths of the CT. The pickup should be set lower than the maximum allowed unbalance between the phases. An additional check is added where the **Imax** must be greater than the minimum starting current **ILmin** and lower than the maximum load current **ILmax**. This additional maximum load current supervision ensures that the symmetry check does not operate when a real fault causes one of the phases to have high current. Similarly, the minimum starting current supervision ensures that at least one of the phases need to be higher than the minimum value in order to detect CT disconnection problems.

$$Q = \frac{I_{min}}{I_{max}}$$

$$where\ I_{Lmin} < I_{max} < I_{Lmax}$$

Path: ***Setpoints*** > ***Control*** > ***CT Supervision*** > ***CT Supervision 1(X)***

FUNCTION

Range: Disabled, Trip, Alarm, Latched Alarm, Configurable

Note: Relays with firmware version 4 and later have a `Latched Trip` *option*

Default: Disabled

SIGNAL INPUT

Range: dependent upon the order code

Default: CT Bank 1-J1

This setting selects the appropriate CT bank for detecting CT failures.

MAX CURRENT SUPERVISION

Range: 0.050 to 30.000 x CT in steps of 0.001

Default: 1.500 x CT

This setting applies to sequence, differential, and symmetry check. It supervises each check function with maximum load current condition. If the phase magnitude of any of the three phases or **Imax** is above this setting, the respective check function is blocked. This avoids nuisance alarms under fault conditions and unnecessary blocking of protection elements during faults.

PICKUP DELAY

Range: 0.000 to 6000.000 s in steps of 0.001

Default: 0.000 s

The pickup delay setting applies to sequence, differential, and symmetry check. It adds an additional delay between pickup and operate of the element. This is a common setting for the whole element but each check runs its individual timer depending on their time of pickup.

Note:
If the CT Supervision is used for blocking instantaneous current protection elements, the pickup delay should be coordinated to allow blocking of the fastest current element.

Note:
For 850D dual feeder applications, when the signal input is from CT Bank 1 – J1, VT Bank 1 -J2 is used as the polarizing voltage source. Similarly, when the signal input is from CT Bank 2 – K1, VT Bank 2 – K2 is used as the polarizing voltage source.

CTS detection using the Sequence Check Method

SEQUENCE CHECK

Range: Disabled, Enabled

Default: Disabled

This setting enables the sequence check function. The sequence check uses zero sequence voltage, zero sequence current and measured ground current.

SEQ 3I0 PKP

Range: 0.050 to 30.000 x CT in steps of 0.001

Default: 0.100 x CT

This setting is part of the sequence check and it represents the threshold for zero sequence current measurement. This zero sequence current is calculated from the set of 3 Phase CTs.

SEQ 3V0 PKP

Range: 0.02 to 3.00 x VT in steps of 0.01

Default: 0.20 x VT

This setting is part of the sequence check and it represents the threshold for zero sequence voltage measurement. This zero sequence voltage is calculated from the set of 3 phase VTs.

> *Note:*
> *The VTs must be connected in wye configuration in order to calculate the zero sequence voltage.*

SEQ IG PKP

Range: 0.050 to 30.000 x CT in steps of 0.001

Default: 0.200 x CT

This setting is part of the sequence check and it represents the threshold for the measured ground current. The ground current must be a separate input. It should not be connected in the residual ground connection method for this check to function. Refer to the Sequence Check Ground Inputs figure for more information.

CTS detection using the Differential Check Method

DIFFERENTIAL CHECK

Range: Disabled, Enabled

Default: Disabled

This setting enables the differential check function. The differential check uses zero sequence current and measured ground current.

DIFF CURRENT PKP

Range: 0.050 to 30.000 x CT in steps of 0.001

Default: 0.500 x CT

This setting represents the threshold for the differential current calculated between the calculated zero sequence current and the measured ground current from a core balance CT. If the differential current magnitude is higher than the pickup value, the differential check operates.

DIFF SLOPE

Range: 0 to 100% in steps of 1

Default: 10%

The slope setting is a ratio between the maximum current measured and the differential current above the pickup value. This setting allows for CT error tolerances as the load currents increase. Steeper slope means higher tolerances. By using the slope setting, the pickup value can be automatically increased according to the increasing total current difference. This setting can be set to 0 if correction to the pickup value is not required under higher current loading.

DIFF IG POLARITY

Range: Same, Reverse

Default: Same

If during commissioning, it is discovered that the core balance CT polarity is reverse, this setting can be used to change the polarity. This setting only applies to the differential check portion of the element. Other elements in the relay will remain unaffected.

> *Note:*
> *Refer to the Differential Check Ground Inputs figure for additional grounding information and CT polarity setting.*

CTS detection using the Symmetrical Check Method

SYMMETRY CHECK

Range: Disabled, Enabled

Default: Disabled

This setting enables the symmetry check function. This check uses the ratio of minimum over maximum of the phase magnitude of currents.

SYM QUOTIENT PKP

Range: 0.00 to 1.00 in steps of 0.01

Default: 0.20

The symmetry check quotient Q is the ratio of **Imin/Imax**. Under normal balanced load conditions, this ratio is close to unity. Under CT failure, one of the phases can drop and cause the **Imin** to drop to 0 causing the symmetry check function to pickup. The quotient pickup value should be kept lower than 0.5 to allow for unbalance between the phase currents.

SYM MIN CURRENT

Range: 0.050 to 30.000 in steps of 0.001

Default: 0.100 x CT

This setting is used to compare the **Imax** against the minimum current. For the quotient to be calculated, the **Imax** must be above the minimum current level. This avoids nuisance alarms during low currents and current transformer measurement errors. As long as one of the phases is higher than the minimum current level, the quotient is calculated.

BLOCK

- *Range: Off, Any FlexLogic operand*
- *Default: Off*

OUTPUT RELAY X

Range: Operate, Do Not Operate

Default: Do Not Operate

EVENTS

Range: Disabled, Enabled

Default: Enabled

TARGETS

Range: Disabled, Self-Reset, Latched

Default: Latched

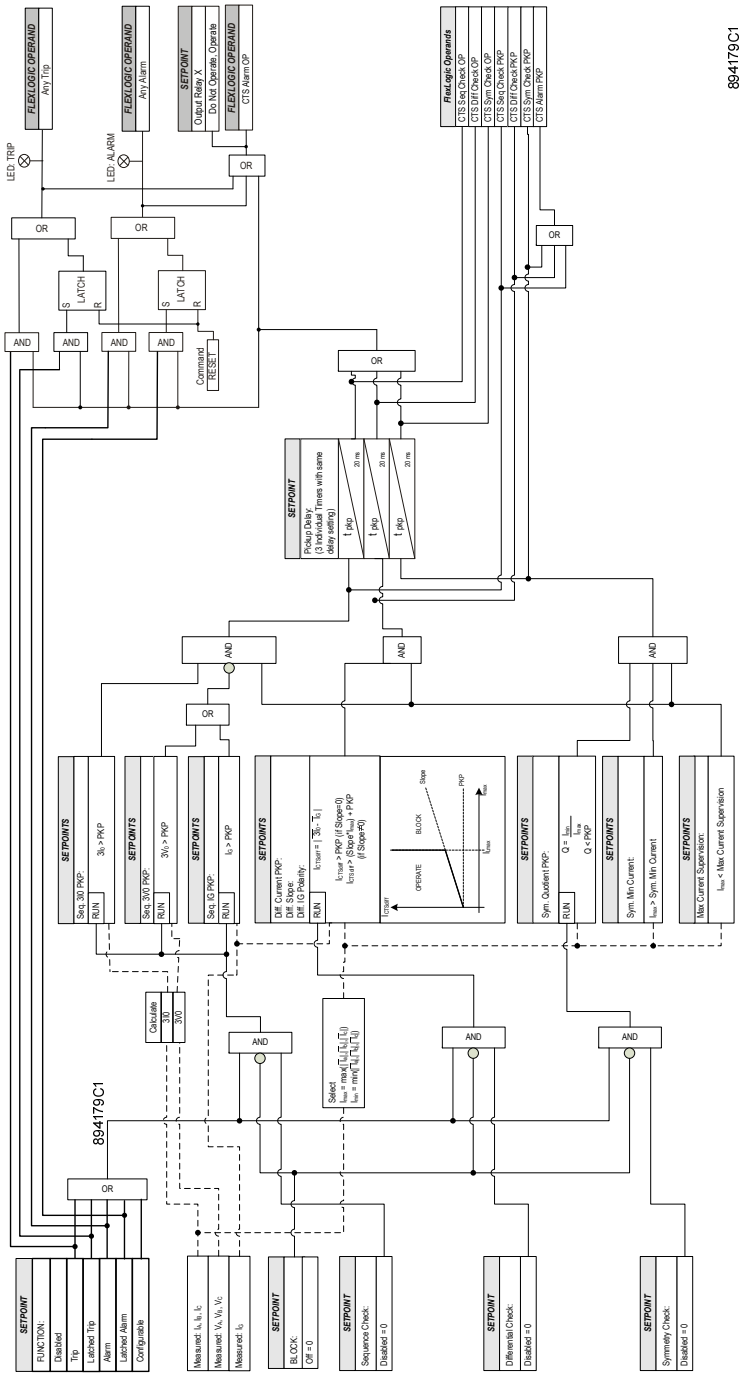

Figure 294: CT Supervision logic diagram

11.20 VT FUSE FAILURE (VTFF)

The VT Fuse Failure detector can be used to raise an alarm and/or block elements that may operate incorrectly for a full or partial loss of AC potential caused by one or more blown fuses. Some elements that might be blocked (via the BLOCK input) are voltage restrained overcurrent, directional current, power functions. This loss can be caused by a blown primary voltage transformer fuse (or fuses), or by voltage transformer secondary circuit protection fuse failure.

There are two classes of fuse failure that may occur:

1. Class A: loss of one or two phases
2. Class B: loss of all three phases.

Different means of detection are required for each class. An indication of a Class A failure is a significant level of negative sequence voltage, whereas an indication of a Class B failure is the presence of positive sequence current and an insignificant amount of positive sequence voltage. These noted indications of fuse failure could also be present when faults are present on the system, so a means of detecting faults and inhibiting fuse failure declarations during these events is provided.

Once the fuse failure condition is declared, it is sealed-in until the cause that generated it disappears. An additional condition is introduced to inhibit a fuse failure declaration when the monitored circuit is de-energized: positive sequence voltage and current are both below threshold levels.

The settings of this function are applied to three-phase voltage input (supervised with positive, negative and zero sequence current components) to produce an Operate flag.

This function also provides detection of the VT neutral wire open condition using the third harmonic content in the 3V0 (i.e. Va+Vb+Vc) signal. Under neutral wire open condition, 3V0 contains small fundamental content under balance load condition but contains significant 3rd harmonic contents regardless of the load condition (balance or imbalance).

11.20.1 VT FUSE FAILURE SETTINGS

Path: ***Setpoints*** > ***Control*** > ***VT Fuse Failure 1 (2)***

FUNCTION

Range: Disabled, Alarm, Latched Alarm, Configurable

Default: Disabled

VT INPUT

Range: Dependent upon the order code

Default: Ph VT Bnk1-J2

CT INPUT

Range: Dependent upon the order code

Default: CT Bnk1-J1

TIME DELAY

Range: 0 to 60000 s in steps of 1 s

Default: 0 s

This setting can be used to avoid fuse failure detection in the case of sudden loss of voltage when the current is zero (breaker remains in open condition) and the transient negative sequence voltage appears. This setting should be used where the VT is on the Bus side, in which case the relay may detect voltage loss when the breaker is open.

Operate Delay:

Range: 1 to 10 sec in steps of 1 sec

Default: 5 Sec

This setting determines the operate time-delay upon detection of a VTS condition.

VT Ntrl Wire Det

Range: Disabled, Enabled

Default: Disabled

This setting enables and disables the VT neutral wire open detection function. When the VT is connected in Delta, do not enable this function because there is no neutral wire for Delta connected VT.

VT Ntrl Wire PKP

Range: 0.0 to 100.0% in steps of 0.1 %

Default: 10.0 %

This setting specifies the pickup level of 3rd harmonic of 3V0 signal for the VT neutral wire open detection logic to pick up. % is calculated based on the Phase VT Secondary

OUTPUT RELAY X

Range: Operate, Do Not Operate

Default: Do Not Operate

EVENTS

Range: Enabled, Disabled

Default: Enabled

TARGETS

Range: Disabled, Self-reset, Latched

Default: Self-reset

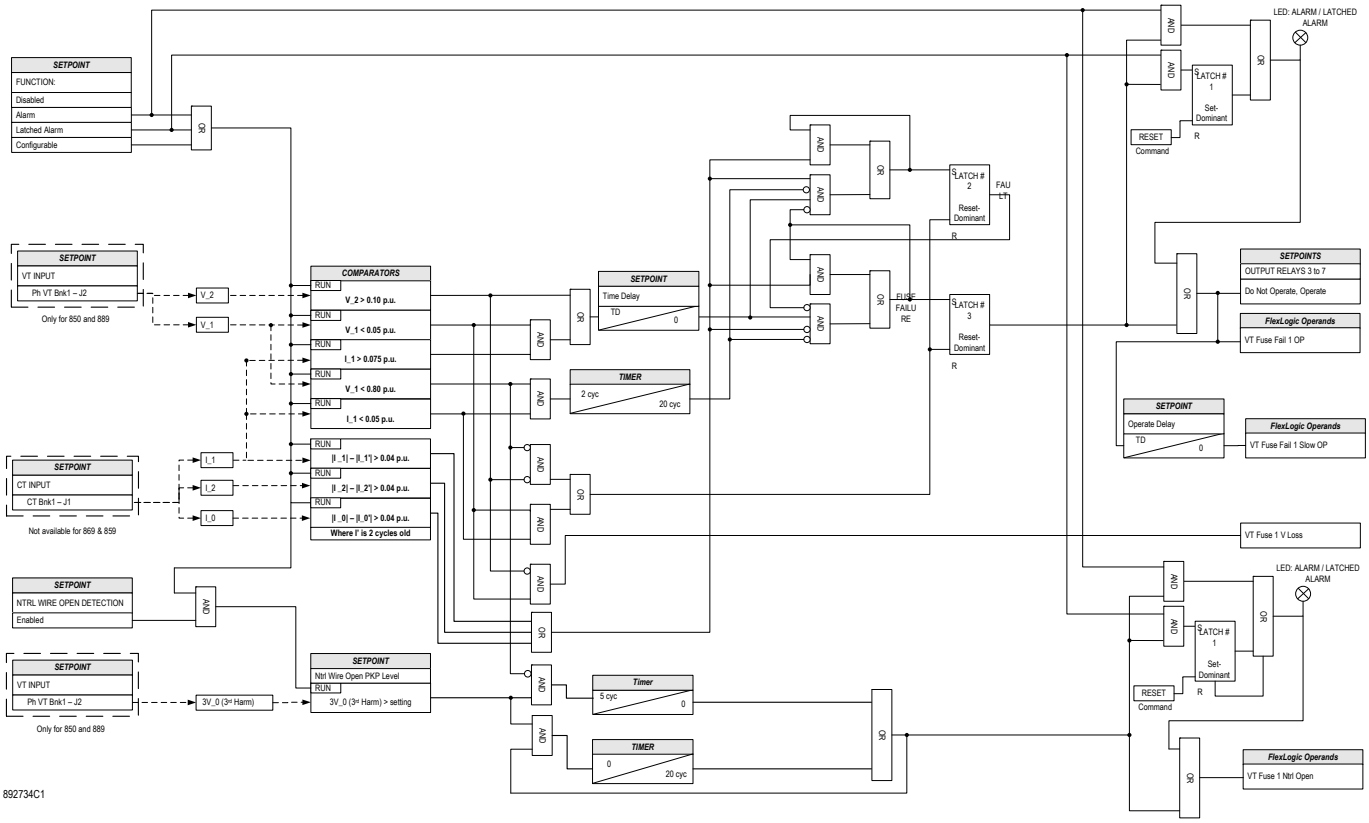

Figure 295: VT Fuse Failure logic diagram

11.21 DIGITAL ELEMENTS

The 8Series has 64 identical digital elements available. A digital element can monitor any FlexLogic operand and present a target message and enable events recording depending on the output operand state. The digital element settings include:

- a name to be referenced in any target message
- a blocking input from any selected FlexLogic operand
- a timer for pickup and reset delays for the output operand

Digital elements run once per power system cycle. As such they can easily fail to react to an input signal or a block signal with a duration less than one power system cycle. This also means that digital element output can react up to one power system cycle later than the pickup and reset delay settings indicate. Therefore, do no use digital elements:

- with transient signals, such as communications commands.
- where random delays of up to one cycle cannot be tolerated, such as in high speed protection.

Example : Trip circuit integrity monitoring

In many applications it is desirable to monitor the breaker trip circuit integrity such that problems can be detected before a trip operation is required. The circuit is considered to be healthy when the voltage monitor connected across the trip output contact detects a low level of current (Contact output voltage is not zero), well below the operating current of the breaker trip coil. If the circuit presents a high resistance, the trickle current falls below the monitor threshold, and an alarm is declared.

In most breaker control circuits, the trip coil is connected in series with a breaker auxiliary contact, which is open when the breaker is open. To prevent unwanted alarms in this situation, the trip circuit monitoring logic must include the breaker position.

Assume that output 1 is a trip contact. Using the output settings, this output is given an ID name; for example, ***Cont Op 1.*** Assume a 52a breaker auxiliary contact is connected to contact input 1 to monitor breaker status (Block when contact input 1 is OFF).

Using the contact input settings, this input is given a name, for example, ***CI 1***, and is set `On` when the breaker is closed. The function is blocked when breaker is open, i.e. ***CI 1*** is Off. The settings to use digital element 1 to monitor the breaker trip circuit are shown below:

SETTING	PARAMETER
Function	Enabled
Name	Bkr Trip Cct Out
Input	Cont Op 1
Pickup Delay	0.200 s
Dropout Delay	0.100 s
Relays	Relay : Disabled
Block	CI 1 Off
Target	Self-Reset
Events	Enabled

NAME

Range : 13 alphanumeric characters

Default: Digital Elem1

Assign a user-defined name to the Digital Element. This Name is used In Flexlogic operands, Target messages, a blocking input from any selected flexlogic operands, and a timer for pickup and reset delays for the output operands.

FUNCTION

Range: Disabled, Trip, Latched Trip, Alarm, Latched Alarm or Configurable

Default: Disabled

INPUT

Range : Off, Any FlexLogic operand

Default: Off

Selects a FlexLogic operand to be monitored by the digital element.

PICKUP DELAY

Range: 0.000 to 6000.000 s in steps of 0.001 s

Default: 0.000

Sets the required time delay from element pickup to element operation. If a pickup

delay is not required, set to "0.000," To avoid nuisance alarms, set the delay greater than the operating time of the breaker.

DROPOUT DELAY

Range: 0.000 to 6000.000 s in steps of 0.001 s

Default: 0.000

Sets the dropout time delay to reset. If a reset delay is not required, set to “0.000.”

OUTPUT RELAY X

Range: Do Not Operate, Operate

Default: Do Not Operate

BLOCK

Range: FlexLogic operand

Default: Off

EVENTS

Range: Disabled, Enabled

Default: Enabled

TARGETS

Range: Disabled, Self-reset, Latched

Default: Self-reset

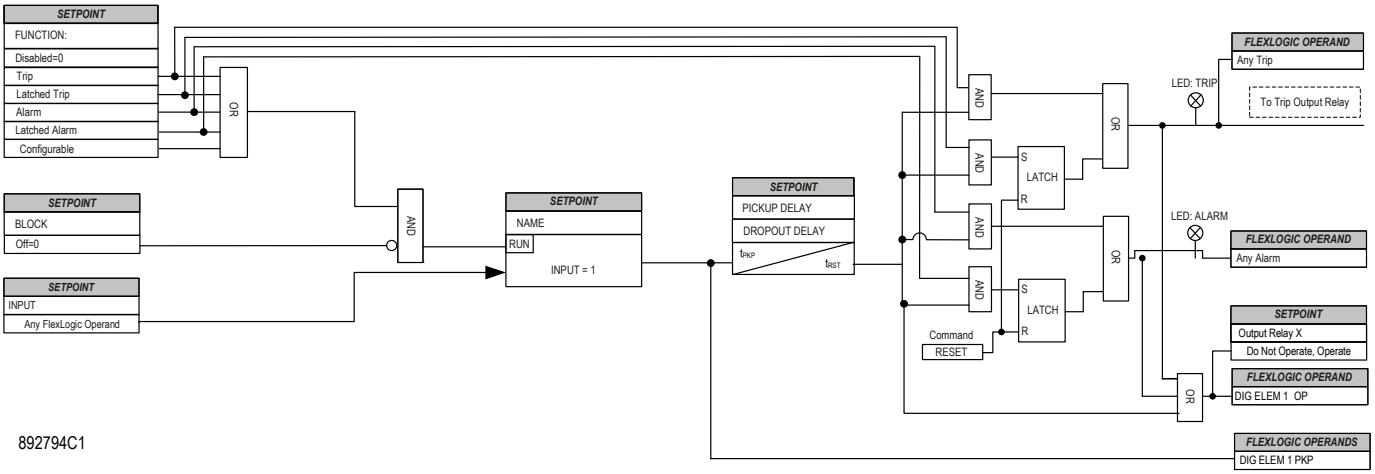

Figure 296: Digital Elements logic

CHAPTER 12

FLEXLOGIC

12.1 CHAPTER OVERVIEW

This chapter describes the FlexLogic and Testing setpoints. FlexLogic setpoints provide access to the variable logic used with the relay. Testing setpoints include simulated current and voltage inputs, and test operations for LEDs, input contacts, and output relays.

This chapter contains the following sections:

Chapter Overview 649

FlexLogic 650

12.2 FLEXLOGIC

To provide maximum flexibility, the arrangement of internal digital logic combines fixed and user-programmed parameters. Logic upon which individual features are designed is fixed, and all other logic, from digital input signals through elements or combinations of elements to digital outputs, is variable. The user has complete control of all variable logic through FlexLogic. In general, the system receives analog and digital inputs, which then uses FlexLogic to produce analog and digital outputs.

> *Note:*
> *For information on the Logic Designer and Logic Monitor menu items, refer to the EnerVista D & I Setup help menu.*

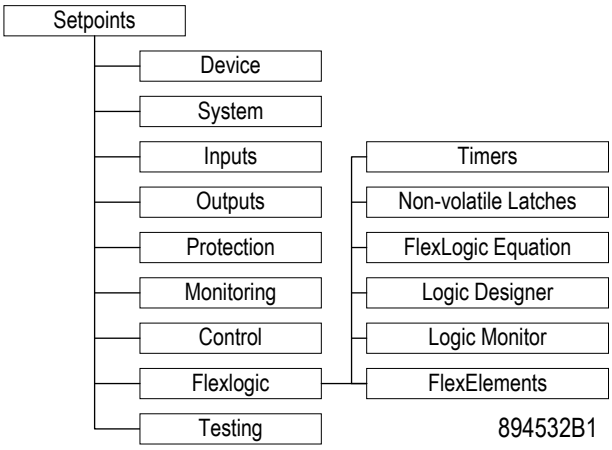

Figure 297: FlexLogic Display Hierarchy

The states of all digital signals are represented by flags (FlexLogic operands). A digital 1 is represented by a *Set* flag. Any external contact change-of-state can be used to block an element from operating, as an input to a control feature in a FlexLogic equation, or to operate an output relay. The state of the contact input can be displayed locally or viewed remotely via the communications facilities provided. In a simple scheme where a contact input is used to block an element is desired, this selection is made within the menu of the element. This applies to other features that set flags: elements, virtual inputs, remote inputs, schemes, and human operators.

When more complex logic than the one presented above is required, the FlexLogic tool should be used. For example, if it is desired to block the operation of a Phase Time Overcurrent element by the closed state of a contact input, and the operated state of a Phase Undervoltage element, the two input states need be programmed in a FlexLogic equation. This equation ANDs the two inputs to produce a virtual output which then must be programmed within the menu of the Phase Time Overcurrent as a blocking input. Virtual outputs can be created only by FlexLogic equations.

Traditionally, protective relay logic has been relatively limited. Any unusual applications involving interlocks, blocking, or supervisory functions had to be hard-wired using contact inputs and outputs. FlexLogic minimizes the requirement for auxiliary components and wiring while making more complex schemes possible.

The logic that determines the interaction of inputs, elements, schemes and outputs is field programmable through the use of logic equations that are sequentially processed. The use of virtual inputs and outputs in addition to hardware is available internally and on the communication ports for other relays to use (distributed FlexLogic).

FlexLogic allows customization of the relay through a series of equations that consist of operators and operands. The operands are the states of inputs, elements, schemes and outputs. The operators are logic gates, timers and latches (with set and reset inputs). A system of sequential operations allows any combination of specified operands to be assigned, as inputs to specified operators, to create an output. The final output of an equation is a numbered register called a ‘Virtual Output’. Virtual Outputs can be used as an input operand in any equation, including the equation that generates the output, as a seal-in or other type of feedback.

A FlexLogic equation consists of parameters that are either operands or operators. Operands have a logic state of 1 or 0. Operators provide a defined function, such as an AND gate or a Timer. Each equation defines the combinations of parameters to be used to set a Virtual Output flag. Evaluation of an equation results in either a 1 (=ON, i.e. flag set) or 0 (=OFF, i.e. flag not set). Each equation is evaluated at least 4 times during every power system cycle.

Some types of operands are present in the relay in multiple instances; e.g. contact and remote inputs. These types of operands are grouped together (for presentation purposes only) on the faceplate display. The characteristics of the different types of operands are listed in the table below.

FlexLogic Operands

FlexOperand 850 420

The following operands can be re-named if required

- Breakers in the breaker control feature
- ID (identification) of contact inputs
- ID of virtual inputs
- ID of virtual outputs.
- If the default name or ID of any of these operands are changed, the assigned name appears in the relay list of operands.

FlexLogic Operators

TYPE	SYNTAX	DESCRIPTION	NOTES
Editor	INSERT	Insert a parameter in an equation list.	
	DELETE	Delete a parameter from an equation list.	
End	END	The first END encountered signifies the last entry in the list of processed FlexLogic™ parameters.	
One-shot	POSITIVE ONE SHOT	One shot that responds to a positive going edge.	A ‘one shot’ refers to a single input gate that generates a pulse response to an edge on the input. The output from a ‘one shot’ is True (positive) for only one pass through the FlexLogic equation. There is a maximum of 64 ‘one shots’.
	NEGATIVE ONE SHOT	One shot that responds to a negative going edge.	
	DUAL ONE SHOT	One shot that responds to both the positive and negative going edges.	

TYPE	SYNTAX	DESCRIPTION	NOTES
Logic gate	NOT	Logical NOT	Operates on the previous parameter.
	OR(2)↓ OR(16)	2 input OR gate↓ 16 input OR gate	Operates on the 2 previous parameters.↓Operates on the 16 previous parameters.
	AND(2)↓ AND(16)	2 input AND gate↓ 16 input AND gate	Operates on the 2 previous parameters. ↓Operates on the 16 previous parameters.
	NOR(2)↓ NOR(16)	2 input NOR gate↓ 16 input NOR gate	Operates on the 2 previous parameters. ↓Operates on the 16 previous parameters.
	NAND(2)↓ NAND(16)	2 input NAND gate↓ 16 input NAND gate	Operates on the 2 previous parameters. ↓Operates on the 16 previous parameters.
	XOR(2)	2 input Exclusive OR gate	Operates on the 2 previous parameters.
	LATCH (S,R)	Latch (set, reset): reset-dominant	The parameter preceding LATCH(S,R) is the reset input. The parameter preceding the reset input is the set input.
Timer	TIMER 1↓ TIMER 32	Timer set with FlexLogic™ timer 1 settings.↓ Timer set with FlexLogic™ timer 32 settings.	The timer is started by the preceding parameter. The output of the timer is TIMER #.
Assign virtual output	= Virt Op 1↓ = Virt Op 32	Assigns previous FlexLogic™ operand to virtual output 1.↓ Assigns previous FlexLogic™ operand to virtual output 96.	The virtual output is set by the preceding parameter

The characteristics of the logic gates are tabulated below, and the operators available in FlexLogic are listed in the FlexLogic operators table.

FlexLogic Gate Characteristics

GATES	NUMBER OF INPUTS	OUTPUT IS 1 (= ON) IF...
NOT	1	input is ‘0’
OR	2 to 16	any input is ‘1’
AND	2 to 16	all inputs are ‘1’
NOR	2 to 16	all inputs are ‘0’
NAND	2 to 16	any input is ‘0’
XOR	2	only one input is ‘1’

FLEXLOGIC RULES

When forming a FlexLogic equation, the sequence in the linear array of parameters must follow these general rules:

- Operands must precede the operator which uses the operands as inputs.
- Operators have only one output. The output of an operator must be used to create a Virtual Output if it is to be used as an input to two or more operators.
- Assigning the output of an operator to a Virtual Output terminates the equation.
- A timer operator (for example, TIMER 1) or Virtual Output assignment may only be used once. If this rule is broken, a syntax error will be declared.

FLEXLOGIC EVALUATION

- Each equation is evaluated in the order in which the parameters have been entered.
- FlexLogic provides latches which by definition have a memory action, remaining in the set state after the set input has been asserted. However, they are volatile; that is, they reset on the re-application of control power.
- When making changes to settings, all FlexLogic equations are re-compiled whenever any new setting value is entered, so all latches are automatically reset. If it is necessary to re-initialize FlexLogic during testing, for example, it is suggested to power the unit down then back up.

12.2.1 TIMERS

Path: ***Setpoints*** > ***FlexLogic*** > ***Timers***

There are 32 identical FlexLogic timers available. These timers can be used as operators for FlexLogic equations.

TIMER 1 TYPE

Range: Milliseconds, Seconds, Minutes

Default: Milliseconds

The setpoint is used to select the time measuring unit.

TIMER 1 MODE

Range: Pickup, Dropoff, Dwell, Pulse, Pickup/Dropoff,

Default: Pickup

TIMER 1 PICKUP DELAY

Range: 0 to 60000 s in steps of 1 s

Default: 0 s

The setpoint sets the time delay to Pickup. If a Pickup delay is not required, set this function to “0”.

This setting is used to set the time delay for Pickup, Dwell, Pulse and Pickup/Dropoff.

TIMER 1 DROPOUT DELAY

Range: 0 to 60000 s in steps of 1 s

Default: 0 s

The setpoint sets the time delay to Dropout. If a Dropout delay is not required, set this function to “0”.

This setting is used to set the drop-off time delay for Dropoff, Pickup/Dropoff.

12.2.2 NON-VOLATILE LATCHES

The purpose of a Non-volatile Latch is to provide a permanent logical flag that is stored safely and does not reset when the relay reboots after being powered down. Typical applications include sustaining operator commands or permanently blocking relay functions such as Autorecloser, until a deliberate HMI action resets the latch.

Operation of the element is summarized in the following table:

LATCH 1 TYPE	LATCH 1 SET	LATCH 1 RESET	LATCH 1 ON	LATCH 1 OFF
Reset Dominant	On	Off	On	Off
	Off	Off	Previous State	Previous State
	On	On	Off	On
	Off			

LATCH 1 TYPE	LATCH 1 SET	LATCH 1 RESET	LATCH 1 ON	LATCH 1 OFF
Set Dominant	On	Off	On	Off
		On		
	Off	Off	Previous State	Previous State
	Off	On	Off	On

Path: ***Settings*** > ***FlexLogic*** > ***Non-volatile Latches*** > ***Latch 1(16)***

NV LATCH 1 FUNCTION

Range: Disabled, Enabled

Default: Disabled

The setpoint enables or disables the Non-volatile Latch function.

NV LATCH 1 TYPE

Range: Reset-Dominant, Set-Dominant

Default: Reset-Dominant

The setting characterizes NV LATCH 1 to be set- or reset-dominant.

NV LATCH 1 SET

Range: Any FlexLogic operand

Default: Off

If asserted, this specified FlexLogic operand sets NV LATCH 1.

LATCH 1 RESET

Range: Any FlexLogic operand

Default: Off

If asserted, this specified FlexLogic operand resets NV LATCH 1.

12.2.3 FLEXLOGIC EQUATION

Path: ***Setpoints*** > ***FlexLogic*** > ***FlexLogic Equation***

The FlexLogic Equation screen is one of two options available to configure FlexLogic. The other option is Logic Designer.

Three time stamp variables: Logic Design Last Saved, Logic Design Last Compiled and FlexLogic Editor Last Saved, have been included in this screen.

Look at the time stamps to easily see which of the options: FlexLogic Editor or Logic Designer is currently being used.

There are 1024 FlexLogic entries available, numbered from 1 to 1024 (i.e. FlexLogic Entry X – where X ranges from 1 to 1024) with default END entry settings. If a Disabled Element is selected as a FlexLogic entry, the associated state flag is never set to 1.

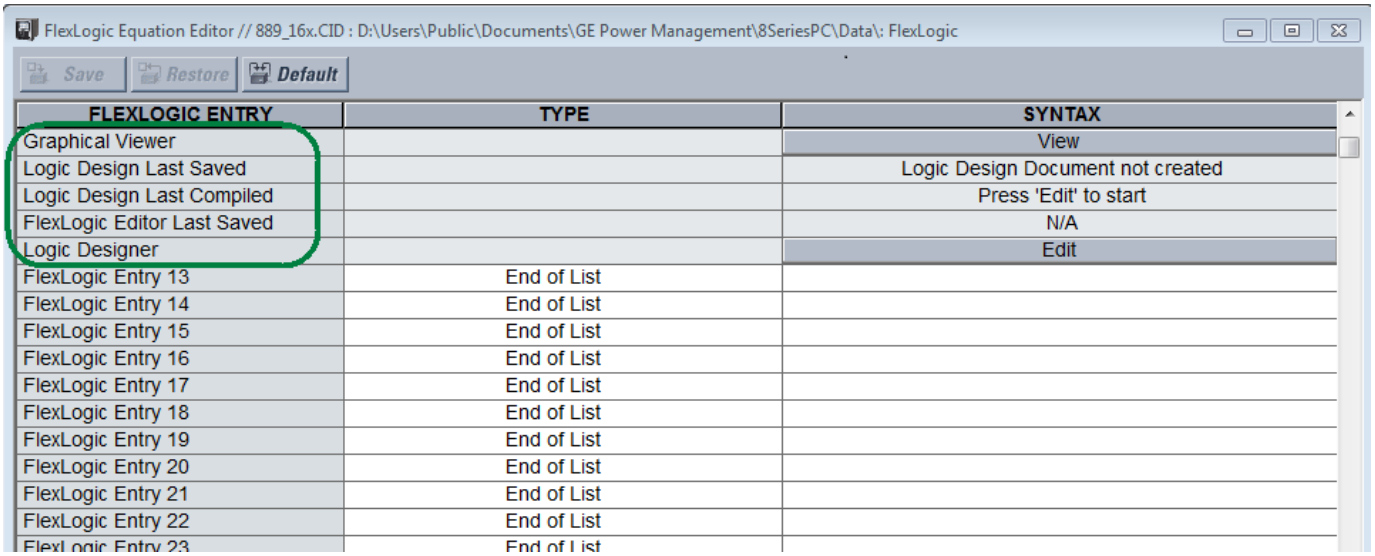

Figure 298: FlexLogic Equation Editor Screen

The FlexLogic entries are defined as follows.

Graphical Viewer: Clicking on the View button enables the FlexLogic equation to be presented in graphical format (Read-only). Refer to the *Viewing FlexLogic Graphics* section for more details.

Logic Design Last Saved, Logic Design Last Compiled, and FlexLogic Editor Last Saved: Each of these three read-only variables holds the time stamp that represents the time that the operation (of the respective variable) was performed.

- When no Logic (New file creation) is present these timestamps are set to default text representations.
- Time stamps are displayed in the format ‘Mon DD YYYY HH:MM:SS’ [Jun 22 1981 14:20:00]
- Each time a ‘Save’ operation is performed in the ‘FlexLogic Equation Editor’ screen, the ‘FlexLogic Editor Last Saved’ entry gets updated.
- Based on the values present at each launch of the ‘FlexLogic Equation Editor’ screen, internal validation prompts the relevant messages. These prompts must be followed to ensure that the ‘FlexLogic’ configuration is synchronized with the ‘Logic Designer’. These three variables are shown in color in the FlexLogic Equation Editor based on timestamps. Color is used to indicate the change (non-synchronization if any) of FlexLogic between the FlexLogic Editor and Logic Designer Screens.

File Conversion and Handling of Time Stamps: When File Conversion is applied the three time stamps are processed (either carry forwarded, defaulted, updated with latest PC time) based on the Source and Destination File versions and Order code supported.

The following cases depict the nature of the three time stamps after a file conversion.

Source Version	Target Version	Is FlexLogic Change Detected?	Time Stamps [LDLs, LDLc, FELs]**
>= 160	>= 160	YES	[0^ , 0 , PCTime**]
>= 160	>=160	NO	*Existing time stamps are copied to the converted file
< 160	>= 160	YES	[0 , 0 , PCTime]
< 160 (& > 120***)	>= 160	NO	[PCTime, PCTime, PCTime,]

**	LDLs – Logic Designer Last Saved, LDLc– Logic Designer Last Compiled and FELs – FlexLogic Editor Last Saved
** PCTime	The time that the file conversion took place

^ 0	Indicates the time stamps are being defaulted
***	There is no support for Logic Designer [Graphical Editor] below version 130
*	For each specific case, the source files for Logic Designer (Graphical) content will also get copied “as is” to the destination folder. This enables the user to retain old content “as is”.

In a typical scenario where both the FlexLogic Designer and FlexLogic Editor are used for configuring FlexLogic, the updated time stamps appear as shown in the following figure.

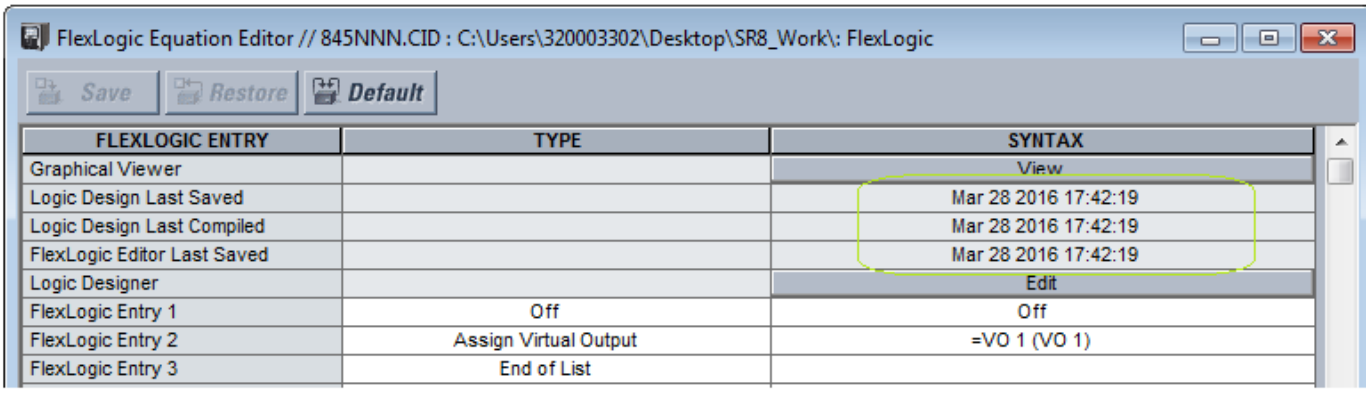

Logic Designer: This entry can be used to initiate the launch of the Logic Designer screen. Once chosen, the existing FlexLogic Equation Editor screen is set to Read-only and then the Logic Designer screen launch is initiated. If the user wants to re-visit the FlexLogic Editor Screen, any existing read-only screen has to be closed first. Then, the screen has to be re-opened. The FlexLogic Editor screen is now editable, again.

In order to maintain synchronization of FlexLogic, the following update rules are defined.

For example, when a user tries to open the ‘FlexLogic Equation Editor’ of a particular device or file.

- If the Logic Designer screen is open and in Edit mode, a message prompts to save any changes. The FlexLogic Equation Editor is not launched.
- If the Logic Designer is open and in saved mode (no edits to save or compile), the Logic Designer screen is closed and then the FlexLogic Equation Editor launch is initiated.

12.2.4 VIEWING FLEXLOGIC GRAPHICS

To verify that the FlexLogic equation(s) and its selected parameters produce the desired logic, the expression can be viewed by converting the derived equation into a graphic diagram. It is strongly recommended and helpful to view an equation as a graphic diagram before it is saved to the relay in order to troubleshoot any possible error in the equation.

To View the FlexLogic Graphic

Click on the View button at the top of the Type column in the FlexLogic Equation screen, see previous figure. Provided the equation is entered correctly, this generates a graphical representation of the expression previously entered. If any operator inputs are missing or any FlexLogic rules have been violated, the EnerVista D&I Setup software displays a message box indicating any problems in the equation when the view feature is attempted.

The expression is also listed to the left of the diagram to demonstrate how the diagram was created. The End statement is added as parameter 5 (End of list).

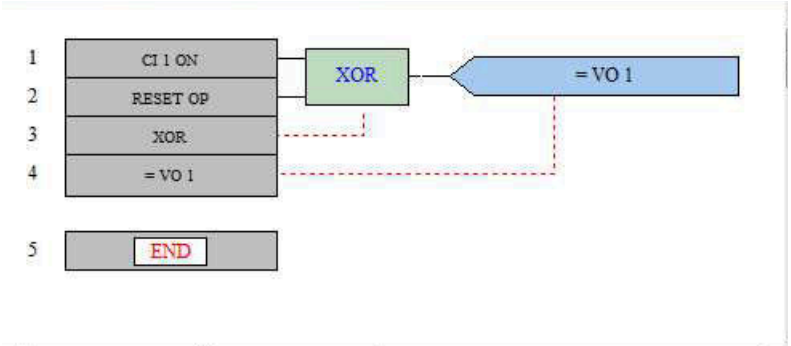

Figure 299: FlexLogic Graphic Example

12.2.5 FLEXELEMENTS

There are 8 identical FlexElements. A FlexElement is a universal comparator, that can be used to monitor any analog actual value measured or calculated by the relay, or a net difference of any two analog actual values of the same type. Depending on how the FlexElement is programmed, the effective operating signal could be either a signed signal or an absolute value.

You can configure the element to respond either to a signal level or to a rate-of-change (delta) over a pre-defined period of time. The output operand is asserted when the operating signal is higher than a threshold or lower than a threshold chosen.

When configuring a FlexElement, keep in mind the following limitations:

1. The analog inputs for any FlexElement must be from the same quantity.
   - current and current (in any combination, phase-symmetrical, phase-phase, kA-A, differential, restraint, etc.)
   - voltage and voltage (as above)
   - active power and active power (Watts and Watts)
   - reactive power and reactive power (Vars and Vars)
   - apparent power and apparent power (VA and VA)
   - angle and angle (any, no matter what signal, for example angle of voltage and angle of current are a valid pair)
   - % and % (any, for example THD and harmonic content is a valid pair)
   - V/Hz and V/Hz
   - °C and °C
   - I^2t and I^2t
   - FlexElement actual and FlexElement actual

     For all the other combinations, the element displays 0.000 or N/A and will not assert any output operand.
2. The analog value associated with one FlexElement can be used as an input to another FlexElement “Cascading”.

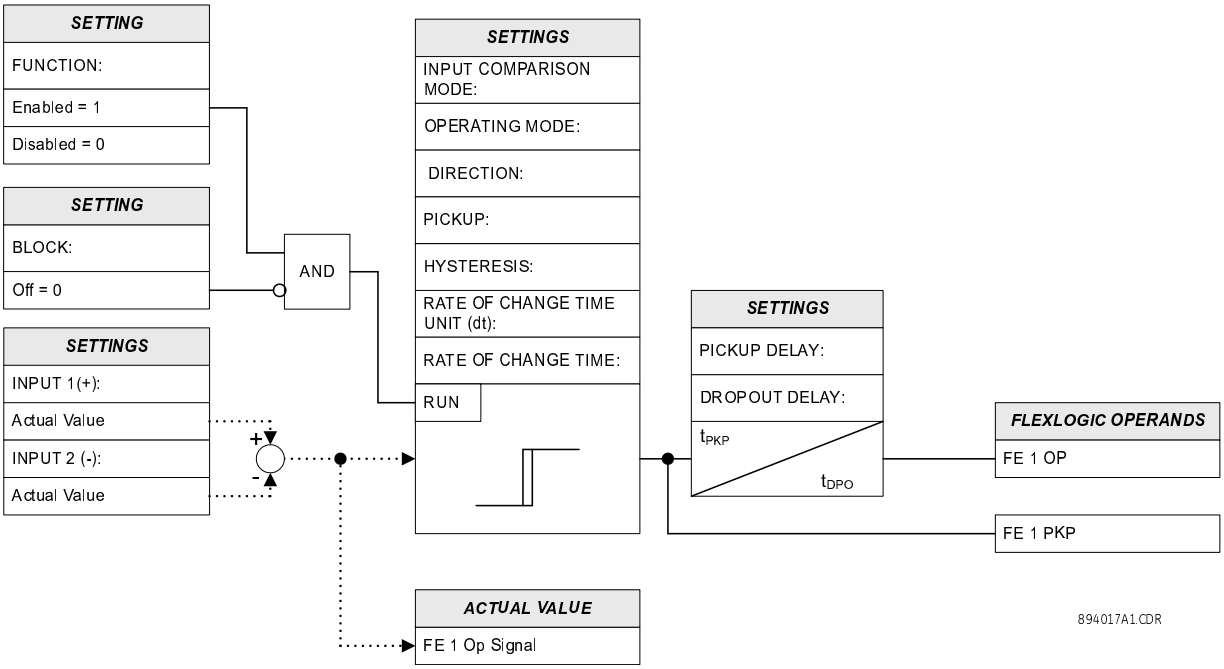

Figure 300: FlexElement logic diagram

12.2.5.1 FLEXELEMENT SETTINGS

Path: ***Setpoints*** > ***FlexLogic*** > ***FlexElements*** > ***FlexElement 1***

FUNCTION

Range: Disabled, Enabled

Default: Disabled

NAME

Range: Up to 13 alphanumeric characters

Default: FlexEl 1

INPUT 1 (+)

Range: Off, any FlexAnalog signal

Default: Off

This setting specifies the first input (non-inverted) to the FlexElement. Zero is assumed as the input if this setting is set to `Off`. For proper operation of the element at least one input must be selected. Otherwise, the element will not assert its output operands.

INPUT 2 (-)

Range: Off, any FlexAnalog signal

Default: Off

This setting specifies the second input (inverted) to the FlexElement. Zero is assumed as the input if this setting is set to `Off`. For proper operation of the element at least one input must be selected. Otherwise, the element will not assert its output operands.

This input should be used to invert the signal if needed for convenience, or to make the element respond to a differential signal such as for a top-bottom oil temperature differential alarm.

A warning message is displayed and the element does not operate if the two input signals are of different types, for example if one tries to use active power and phase angle to build the effective operating signal.

PICKUP

Range: -30.000 to 30.000 pu in steps of 0.001 pu

Default: 1.000

This setting specifies the operating threshold for the effective operating signal of the element.

If the `Over` direction is set, the element picks up when the operating signal exceeds the Pickup value.

If the `Under` direction is set, the element picks up when the operating signal falls below the Pickup value.

The ***HYSTERISIS*** setting controls the element drop out.

Notice that both the operating signal and the pickup threshold can be negative when facilitating applications such as reverse power alarms.

The FlexElement can be programmed to work with all analog values measured or computed by the relay. The ***PICKUP*** setting is entered in pu values using the following definitions of the base units:

Definitions of the Base Unit for the FLEXELEMENT

Measured or calculated analog value related to:	Base Unit
Voltage	V_{BASE} = maximum nominal primary RMS value of the Input 1(+) and input 2(-) inputs
Current	I_{BASE}= maximum nominal primary RMS value of the Input 1(+) and input 2(-) inputs
Power	P_{BASE}= maximum value of V_{BASE} * I_{BASE} for the Input 1(+) and input 2(-) inputs
Power Factor	PF_{BASE}= 1.00
Phase Angle	DegBASE= 360 deg
Harmonic Content	H_{BASE} = 100% of nominal
THD	THD_{BASE}= 100%
Frequency	f_{BASE}= nominal frequency as entered under the SYSTEM SETUP menu
Volt/Hz	BASE = 1.00
dcmA	BASE = DCMA INPUT MAX (setting under the DCMA menu). If two DCMA signals are used by the FlexElement, the maximum of the above setting among the two elements is used as the base.
RTDs	BASE = 100.00°C
I^2t (arcing Amps)	BASE = 2000 kA^2*cycle
Admittance	YBASE = CT Secondary / Phase VT Secondary, where Phase VT Secondary is defined under Setpoints > System > Voltage Sensing and CT Secondary is either 1A or 5A, depending on the order code.

HYSTERESIS

Range: 0.1 to 50.0% in steps of 0.1%

Default: 3.0%

This setting defines the pickup – drop out relation of the element by specifying the width of the hysteresis loop as a percentage of the pickup value as shown above in the *Direction, Pickup, and Hysteresis setpoints* figure.

RATE OF CHANGE TIME UNIT (dt)

Range: millisecond, second, minute

Default: milliseconds

This setting specifies the time base dt when programming the FlexElement as a rate of change element.

The setting is applicable only if the Input Comparison Mode is set to `Delta`.

RATE OF CHANGE TIME

Range: 40 to 65535 in steps of 1

Default: 40

This setting specifies the duration of the time interval for the rate of change mode of operation.

The setting is applicable only if the Input Comparison Mode is set to `Delta`.

12.2.5.2 FLEXELEMENTS - EXAMPLES

T13.8 kV power system:

- Phase VT Connection: Wye
- Phase VT Secondary: 66.4 V
- Phase VT Ratio: 120:1 (phase to neutral primary voltage = 120*66.4 = 7968 V)
- Aux VT Connection: Vab
- Aux VT Secondary: 115 V
- Aux VT Ratio: 120:1 (phase-phase primary voltage = 13800V)
- Phase CTs Primary: 2000 A
- Ground CT Primary: 500 A
- Frequency: 60Hz

Detecting voltage difference:

The voltage difference between calculated phase-phase voltage derived from Wye connected phase VTs, and the directly measured phase-phase voltage from auxiliary VT can be monitored by programming a FlexElement.

FlexElement settings:

- Input 1(+): J2 Vab RMS
- Input 2 (-): J2 Vaux RMS (input from VT connected between phases A and B)
- Operating Mode: Absolute
- Input Comparison Mode: Level
- Direction: Over

The analog input J2 Vab is phase-phase voltage computed by the relay based on three-phase Wye voltages. As per the Phase VT setup, the primary RMS nominal voltage for J2 Vab input is 66.4 V *120 = 7.968kV.

The analog input J2 Vaux is directly measured phase-phase voltage and its primary RMS nominal voltage is 115V *120 = 13.8kV

V_{BASE} = max (7.968kV, 13.8kV) = 13.8kV.

If we want to detect 2% voltage difference (2% @13.8kV = 276V) between the computed phase to phase Vab voltage, and the measured Vaux voltage from a VT connected between phases A and B, the pickup per-unit setting for the FlexElement can be set as follows:

Pickup = 276V/13800V = 0.02 pu

If the voltage difference between the selected inputs becomes bigger than 276 Volts, the FlexElement will pickup, and operate, which can be used to energize contact, or initiate alarm, or trip.

Detecting current difference between Neutral and Ground currents:

In a balanced system, the computed neutral and the measured ground currents is 0 Amps. However, during ground faults their values are not zero. More specifically if the phase and ground CTs are located on the same transformer winding, such that the ground CT is installed on the grounded neutral of the winding, their values supposed to be the same during external fault, and would be different during internal fault. The FlexElement can be used for detecting the differential signal between these quantities. For example the following condition can be made:

I_{BASE} = max (2000A, 500A) = 2000A

FlexElement settings:

- Input 1(+): J1
- Input 2 (-): J1 Ig
- Operating Mode: Absolute
- Input Comparison Mode: Level
- Direction: Over
- Pickup = 200A/2000A: 0.1 pu

When no CT saturation conditions exist, if the difference between the neutral current and the ground current becomes more than 200 Amps primary, this can be treated as an indication of an internal ground fault, which should be cleared. With I_{BASE} = max (2000A, 500A) = 2000A, the pickup can be set as follows: Pickup = 200A/2000A = 0.1 pu

Detecting Low 3-ph Apparent Power:

V_{BASE} = 7.968kV

I_{BASE} = 1000 A

$P_{BASE} = V_{BASE} * I_{BASE}$ = 7968 V *2000A = 15.936MVA

The FlexElement can be set to detect under-power conditions and produce alarm, or trip if the apparent power is less than 500kVA. In this case the pickup setting for the FlexElement can be computed as follows:

Pickup = 0.5MVA / 15.936 MVA = 0.0313 pu

FlexElement settings:

- Input 1(+): Pwr1 Apparent
- Input 2(-): Off
- Operating Mode: Absolute
- Input Comparison Mode: Level
- Direction: Under
- Pickup: 0.0313 pu

Power Factor Cap Bank Switch-In Example

PF_{BASE} = 1.00

FlexElement can be programmed to switch-in cap bank, if for example the measured 3Ph Power Factor has negative value(lag), and drops below the pickup of -0.7 pu. Programming the Hysteresis setpoint to the desired percentage can define the PF value at which the cap bank can be switched off. For example, if the cap bank is required to be switched off at PF value of -0.9, than the percent hysteresis is computed as:

% hysteresis = ((abs(-0.9)-abs(-0.7))/ PFBASE)*100 = 20%

Note:
The minimum pickup should not be less than 0.01 pu, as the measurement resolution for the Power Factor is 0.01.

- Input 1(+): Pwr1 PF
- Input 2(-): Off
- Operating Mode: Signed
- Input Comparison Mode: Level
- Direction: Under
- Pickup: -0.700 pu
- Hysteresis: 20.0 %

Detecting high THD (Total Harmonic Distortion)

THD_{BASE} = 100%

A FlexElement can be programmed to detect excessive amount of harmonics in the system, and Alarm, Trip, or switch-in/out an equipment to suppress the high amount of harmonics. The Total Harmonic Distortion is an estimation of how the AC signals are distorted and as shown above, it can be used as an input for the FlexElement.

For example if an operation from a FlexElement is desired when the THD for the phase A voltage exceeds 20%, then having a base of 100%, the pickup setting should be set to 0.200 pu.

- Input 1(+): J2 Phase A THD
- Input 2(-): Off
- Operating Mode: Absolute
- Input Comparison Mode: Level
- Direction: Over
- Pickup: 0.200 pu

Note:
The harmonics and THD values are measured as percentage of the fundamental signal, and have resolution of 0.01%. However for the minimum pickup setting of 0.001 pu, this would mean percentage step of 0.1%.

Simple V/Hz ratio detection for protected equipment

V/Hz_{BASE} = 1.00High V/Hz ratios in the power system are harmful for the insulation of the protected equipment – transformer, generator, or elsewhere in the power system. If not detected, it can lead to excessive heat and degradation of the insulation which will damage the equipment. A FlexElement can be used for simple detection of V/Hz values, and to issue an Alarm, or Trip, if detected above Pickup setting. Since the base unit for V/Hz = 1.00, programming of the pickup setpoint is straight forward for the desired FlexElement operation. For the example given here, a value of 1.200 pu has been selected.

- Input 1(+): Volts Per Hertz 1Input 2(-): OffOperating Mode: AbsoluteInput Comparison Mode: LevelDirection: OverPickup: 1.200 puHysteresis: 8.3%

Now, if the FlexElement is needed to drop down when the V/Hz ratio becomes equal to 1.1, the hysteresis can be calculated as:1.2pu-1.1pu = 0.1 puHysteresis = (0.1*100)/1.2 = 8.3%

High Breaker Arcing current detection

High breaker arcing current can be detected by using a FlexElement during the opening of a breaker. One or more FlexElements can be configured for detecting levels of maximum arcing current during the tripping of a particular breaker, and give an indication for the health of the breaker.

The base unit for the breaker arcing current is programmed in the relay as: BASE = 2000 kA^2*cycle

- Input 1(+): Total Arcing Current
- Input 2(-): Off
- Operating Mode: Absolute
- Input Comparison Mode: Level
- Direction: Over
- Pickup: 2.500 pu
- Hysteresis: 0.0%

To configure the pickup setpoint for a total arcing current of 5000kA^2/cycle, the per-unit pickup value can be calculated as follows:

Pickup = 5000kA^2 *cycle/2000 kA^2*cycle = 2.500 pu

CHAPTER 13

TESTING

13.1 CHAPTER OVERVIEW

This chapter contains the following sections:

Chapter Overview 665
Testing display hierarchy 666
Simulation 667
General 671
Test LEDs 673
Contact Inputs 674
Output Relays 675
GOOSE 676

13.2 TESTING DISPLAY HIERARCHY

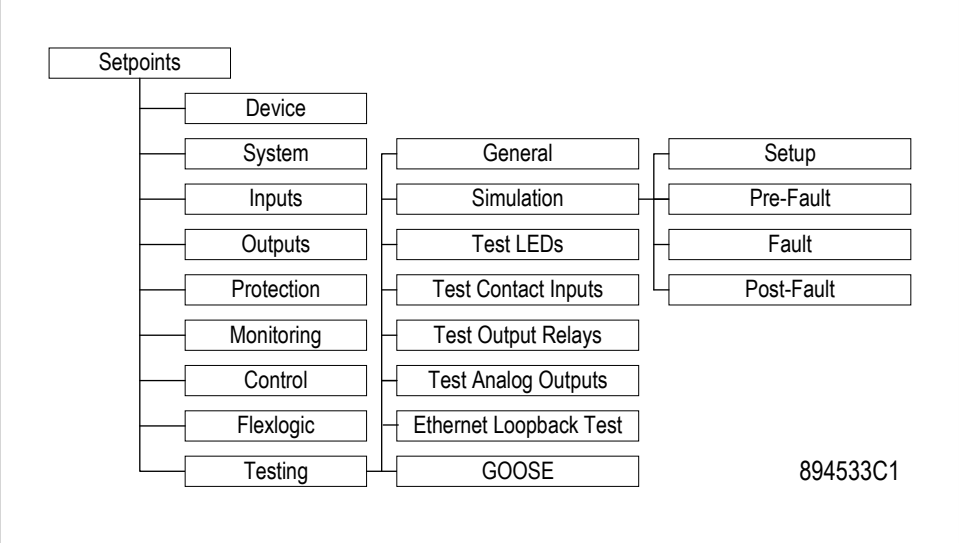

Figure 301: Testing Display Hierarchy

Path:*Setpoints* > *Testing*

The relay can simulate current and voltage inputs when the Simulation feature is enabled. Other test operations are also possible such as LED lamp test of each color, contact input states and testing of output relays.

13.3 SIMULATION

Path: ***Setpoints*** > ***Testing*** > ***Simulation***

- Setup
- Pre-Fault
- Fault
- Post-Fault

The Simulation feature is provided for testing the functionality of the relay in response to programmed conditions, without the need of external AC voltage and current inputs. First time users will find this to be a valuable training tool. System parameters such as currents, voltages and phase angles are entered as setpoints. When placed in simulation mode, the relay suspends reading actual AC inputs, generates samples to represent the programmed phasors, and loads these samples into the memory to be processed by the relay. Normal (pre-fault), fault and post-fault conditions can be simulated to exercise a variety of relay features. There are three sets of input parameters used during simulation, each provides a particular state of the system as follows.

Note:
Simulation mode current input should be set at more than three times the CT rating. All Simulation setpoints revert to default values at power-up.

Note:
Testing of Arc Flash functionality is not possible with the Simulation feature.

13.3.1 SIMULATION SETUP

Path: ***Setpoints*** > ***Testing*** > ***Simulation*** > ***Setup***

SIMULATION STATE

Range: Disabled, Prefault State, Fault State, Postfault State

Default: Disabled

Disable this setpoint if actual system inputs are to be monitored. If set to any other value, the relay is in test mode and actual system parameters are not monitored, including Current, Voltage, and Contact Inputs. The system parameters simulated by the relay will be those in the section below that correspond to the set value of this setpoint. For example, if set to `Fault`, the system parameters will be set to those defined by the **FAULT** setpoint values.

PRE-FAULT TO FAULT TRIGGER

Range: Off, On, Any FlexLogic Operand

Default: Off

POST-FAULT TO PRE-FAULT TRIGGER

Range: Off, On, Any FlexLogic Operand

Default: Off

FORCE RELAYS

Range: Disabled, Enabled

Default: Disabled

When in test mode, and **FORCE RELAYS** is enabled, relay states can be forced from the ***Setpoints*** > ***Testing*** > ***Output Relays*** menu, which overrides the normal operation of the output contacts. When in test mode, and **FORCE RELAYS** is disabled, the relay states maintain their normal operation. Forcing of output relay states is not performed when the Simulation State is disabled.

FORCE LEDS

Range: Disabled, Enabled

Default: Disabled

When in test mode, and **FORCE LEDS** is enabled, LED states and colors can be forced from the ***Setpoints*** > ***Testing*** > ***Test LEDs*** menu, this will override the normal operation of the LEDs. When in test mode, and **FORCE LEDS** is disabled, the LED states and colors will maintain their normal operation. Forcing of LEDs is not performed when the **SIMULATION STATE** is disabled.

13.3.2 SIMULATION PRE-FAULT

This state is intended to simulate the normal operating condition of a system by replacing the normal input parameters with programmed pre-fault values. For proper simulation, values entered here must be below the minimum trip setting of any protection feature.

Voltage magnitudes and angles are entered as Wye values only. The voltage setpoints are not available if the corresponding VT Bank ***PHASE VT CONNECTION*** setpoint is Delta. Voltages are set in secondary VT units.

The CT and VT Bank availability is dependent on the installed Order Code options.

Path:*Setpoints* > ***Testing*** > ***Simulation*** > ***Pre-Fault***

J2 Prefault Van(Vbn,Vcn,Vx) Voltage:

Range: 0.00 to 300.00 V in steps of 0.01

Default: 0.00 V

J2 Prefault Van(Vbn,Vcn,Vaux) Angle:

Range: -359.9° to 0.0° in steps of 0.1

Default: 0.0°

J1(K1,K2) Prefault Phase Ia(Ib,Ic):

Range: 0.000 to 46.000 x CT in steps of 0.001 x CT

Default: 0.000 x CT

Phase current magnitudes are entered as a multiple of the corresponding CT Bank ***PHASE CT PRIMARY*** setpoint.

J1(K1,K2) Prefault Phase Ig:

Range: For Ground CT: 0.000 to 46.000 x CT in steps of 0.001 x CT

Default: 0.000 x CT

The ground current magnitude setpoint range is dependent on the ground CT type as defined in the Order Code options. For Ground CT, the magnitude is entered as a multiple of the corresponding CT Bank ***GROUND CT PRIMARY*** setpoint.

J1(K1,K2) Prefault Ia(Ib,Ic,Ig) Angle:

Range: -359.9° to 0.0° in steps of 0.1

Default: 0.0°

13.3.3 SIMULATION FAULT

The Fault state is intended to simulate the faulted operating condition of a system by replacing the normal input parameters with programmed fault values.

Voltage magnitudes and angles are entered as Wye values only. The voltage setpoints are not available if the corresponding VT Bank ***PHASE VT CONNECTION*** setpoint is Delta. Voltages are set in secondary VT units.

The CT and VT Bank availability is dependent on the installed Order Code options.

Path:*Setpoints* > ***Testing*** > ***Simulation*** > ***Fault***

J2 Fault Van(Vbn,Vcn,Vx) Voltage:

Range: 0.00 to 300.00 V in steps of 0.01

Default: 0.00 V

J2 Fault Van(Vbn,Vcn,Vaux) Angle:

Range: -359.9° to 0.0° in steps of 0.1

Default: 0.0°

J1(K1,K2) Fault Phase Ia(Ib,Ic):

Range: 0.000 to 46.000 x CT in steps of 0.001 x CT

Default: 0.000 x CT

J1(K1,K2) Fault Phase Ig:

Range: For Ground CT: 0.000 to 46.000 x CT in steps of 0.001 x CT

Default: 0.000 x CT

J1(K1,K2) Fault Ia(Ib,Ic,Ig) Angle:

Range: -359.9° to 0.0° in steps of 0.1

Default: 0.0°

13.3.4 SIMULATION POST-FAULT

The Post-fault state is intended to simulate a system that has tripped by replacing the normal input parameters with programmed post-fault values.

Voltage magnitudes and angles are entered as Wye values only. The voltage setpoints are not available if the corresponding VT Bank ***PHASE VT CONNECTION*** setpoint is Delta. Voltages are set in secondary VT units.

The CT and VT Bank availability is dependent on the installed Order Code options.

Path:*Setpoints* > ***Testing*** > ***Simulation*** > ***Post-Fault***

J2 Postfault Van(Vbn,Vcn,Vx) Voltage:

Range: 0.00 to 300.00 V in steps of 0.01

Default: 0.00 V

J2 Postfault Van(Vbn,Vcn,Vaux) Angle:

Range: -359.9° to 0.0° in steps of 0.1

Default: 0.0°

J1(K1,K2) Postfault Phase Ia(Ib,Ic):

Range: 0.000 to 46.000 x CT in steps of 0.001 x CT

Default: 0.000 x CT

J1(K1,K2) Postfault Phase Ig:

Range: For Ground CT: 0.000 to 46.000 x CT in steps of 0.001 x CT For Sensitive Ground CT: 0.000 to 4.600 x CT in steps of 0.001 x CT For CBCT: 0.000 to 15.000 A in steps of 0.001

Default: 0.000 x CT

J1(K1,K2) Postfault Ia(Ib,Ic,Ig) Angle:

Range: -359.9° to 0.0° in steps of 0.1

Default: 0.0°

13.4 GENERAL

The relay enters into test mode when any of the test operations (Simulation, Contact Inputs, Contact Output Relays, LEDs or Analog Outputs) is programmed to Enabled. The actual system parameters are not monitored, including Current, Voltage, and Contact Inputs.

Simulation State

Range: Disabled, Prefault State, Fault State, Postfault State

Default: Disabled

Set the Simulation State to `Disabled` if you want to monitor the actual system inputs.

If set to any other value, the relay is in test mode and the actual system parameters are not monitored, including Current, Voltage, and Contact Inputs. The system parameters simulated by the relay will be those in the section below that correspond to the configured value of this setpoint. For example, if set to ***Fault***, then the system parameters will be set to those defined by the ***Fault*** setpoint values.

When Fault State is set as the Simulation State and a Trip occurs, the Simulation State automatically transitions to the Postfault State.

Force LEDs

Range: Disabled, Enabled

Default: Disabled

When enabled, the relay enters in test mode and LED states and colors can be forced from the ***Setpoints \Testing\Test LEDs*** menu.

This will override the normal operation of the LEDs. When disabled, the LED states and colors will maintain their normal operation.

Force Contact Inputs

Range: Disabled, Enabled

Default: Disabled

When ***Force Contact Inputs*** is enabled, the relay enters test mode and the contact inputs states can be forced from the ***Testing\Contact Inputs*** menu.

This will override the normal operation of the input contacts. When ***Force Contact*** Inputs is disabled, the relay states will maintain their normal operation.

Force Relays

Range: Disabled, Enabled

Default: Disabled

When ***Force Relays*** is enabled, the relay enters test mode and the relay states can be forced from the ***Testing \Output Relays*** menu.

This will override the normal operation of the output contacts. When ***Force Relays*** is disabled, the relay states will maintain their normal operation.

Force Analog Outputs

Range: Disabled, Enabled

Default: Disabled

When ***Force Analog Outputs*** is enabled, the relay enters test mode and the output will reflect the forced value as a percentage of the range 0 to 1 mA, 0 to 5 mA, 0 to 10 mA, 0 to 20 mA, or 4 to 20 mA.

When ***Force Analog Outputs*** is disabled, the relay states will maintain their normal operation.

13.5 TEST LEDS

The Test LEDs setting is used to program the state and color of each LED when in test mode and ***FORCE LEDS*** is enabled.

> *Note:*
> *Test LEDs setpoints here will revert to default values at power-up.*

Path:*Setpoints* > *Testing* > *Test LEDs*

LED 1 (17)

Range: Off, Red, Green, Orange

Default: Off

LED 1 (24)

Range for 1(14): Off, Red, Green, Orange

Range for 15(24): Off, Orange

Default: Off

13.6 CONTACT INPUTS

This section is used to program the state of each contact input when enabled in test mode. The number of Contact Inputs available is dependent on the installed Order Code options.

> *Note:*
> *Contact Inputs setpoints here will revert to default values at power-up.*

Path: ***Setpoints*** > ***Testing*** > ***Contact Inputs***

CI 1(X):

Range: Off, On

Default: Off

The item name displays the user configurable name for the contact input.

13.7 OUTPUT RELAYS

This section is used to program the state of each output relay when ***FORCE RELAYS*** is enabled.

Select `Off` to force the output relay to the de-energized state, or select `On` to force the output relay to the energized state.

The number of Output Relays available is dependent on the installed Order Code options.

> *Note:*
> *Output Relays setpoints here will revert to default values at power-up.*

Path:*Setpoints* > *Testing* > *Output Relays*

OUTPUT RELAY 1(X)

Range: Off, On

Default: Off

13.8 GOOSE

When the relay provides GOOSE, a menu is available for testing GOOSE messaging

SETPOINTS > TESTING > GOOSE

TXGOOSE Sim Mode

Range: Disabled, Enabled

Default: Disabled

When disabled, the SIM bit in all transmitted GOOSE messages are set to *FALSE*. When enabled, the SIM bit in all transmitted GOOSE messages are set to *TRUE*.

Accept Sim GOOSE

Range: Disabled, Enabled

Default: Disabled

When disabled, the relay SIM attribute (LPHD1.Sim.StValin) is set to *FALSE* and the GOOSE/SV messages received with simulation bit set are ignored. When enabled, the relay SIM attribute (LPHD1.Sim.StValin) is set to *TRUE* so that if GOOSE/SV messages are received with the SIM bit set, these will be used in place of the normal messages.

CHAPTER 14

STATUS

14.1 CHAPTER OVERVIEW

This chapter contains the following sections:

Chapter Overview 678
Summary 679
Autoreclose 682
Breaker status 683
Information 684
Communications status 687
Other status settings 691

14.2 SUMMARY

Configurable Single Line Diagram (SLD)

The status of each SLD screen is displayed under ***Status*** > ***Summary*** > ***Configurable SLDs*** > ***SLD1(X)***.

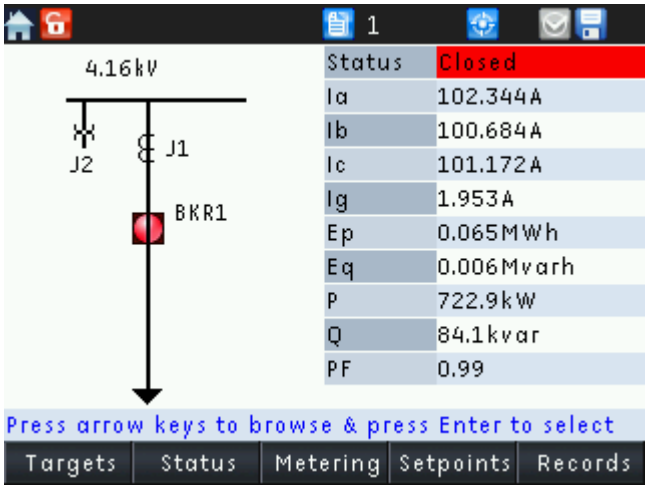

Figure 302: Sample SLD

Once in the SLD screen, by default no breaker/switch is highlighted or selected. Pressing the Up/Dn (or Up/Dn/Left/Right) navigation keys highlights BKR1 and navigates through BKR1, 2, 3, etc. and then through Switch1, 2, 3, etc.

If the Up/Dn/Left/Right keys are used, the selection moves to the closest available breaker/switch from the currently highlighted object. To select the breaker/switch, press the enter key. Upon pressing the Enter key, the tab labels change to the programmable tab pushbutton labels and a flash message for the breaker selected appears (Flash Message: `BKR1 Selected`). Pressing Escape de-selects the breaker/switch and the tab pushbutton labels.

Annunciator

The graphical annunciator panel emulates a physical annunciator panel. Indicators on the graphical panel are backlit and have a description of the alarm condition that lights each indicator. The annunciator panel status window shows the alarms that are active.

To reset an active alarm, first highlight the active alarm using the navigation keys, then press the reset button to reset the highlighted alarm. If no indicator is selected, all alarms on the page are reset by pushing the reset button.

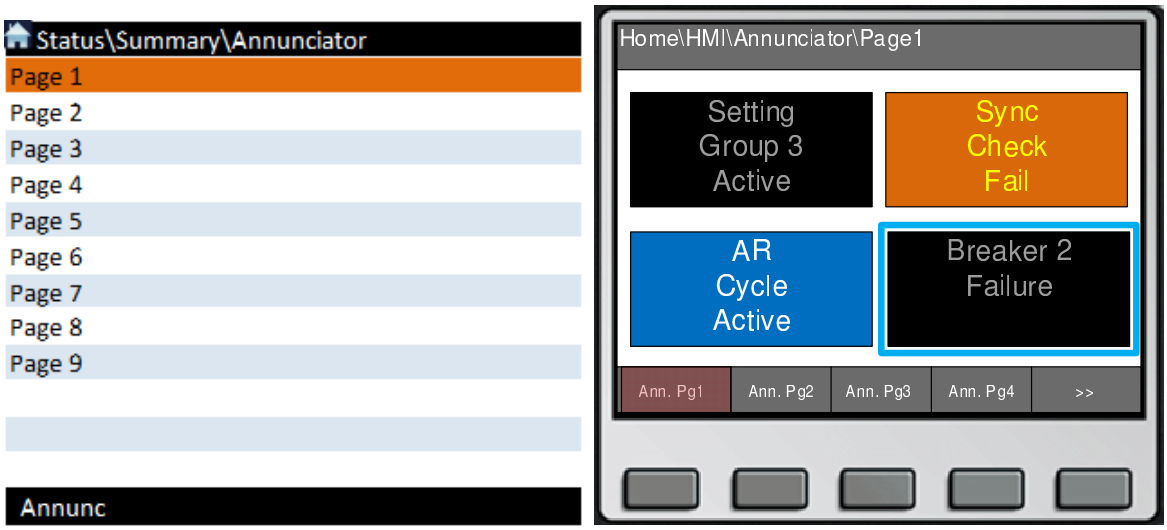

Figure 303: Physical and Graphical Annunciator Panels

Tab pushbuttons

Navigation

There are two ways to navigate to the Tab Pushbutton control pages:

- Relay Home Screens
- **Path: *Status* > *Summary* > *Tab Pushbuttons*** (from relay) **Home Screens**

By default, the Tab Pushbuttons summary page is programmed as one of the Home Screens. Press the home button repeatedly to cycle through the programmed Home Screens.

> *Note:*
> *Tab pushbuttons can only be controlled physically through the front panel of the relay. Their operation is not available from the setup software.*

Path: *Status* > *Summary* > *Tab Pushbuttons*

The initial view of the Tab Pushbutton controls is the Summary page, which shows the status of all 20 pushbuttons. To operate the pushbuttons, navigate to the individual pages where the tab pushbuttons can be used to activate them.

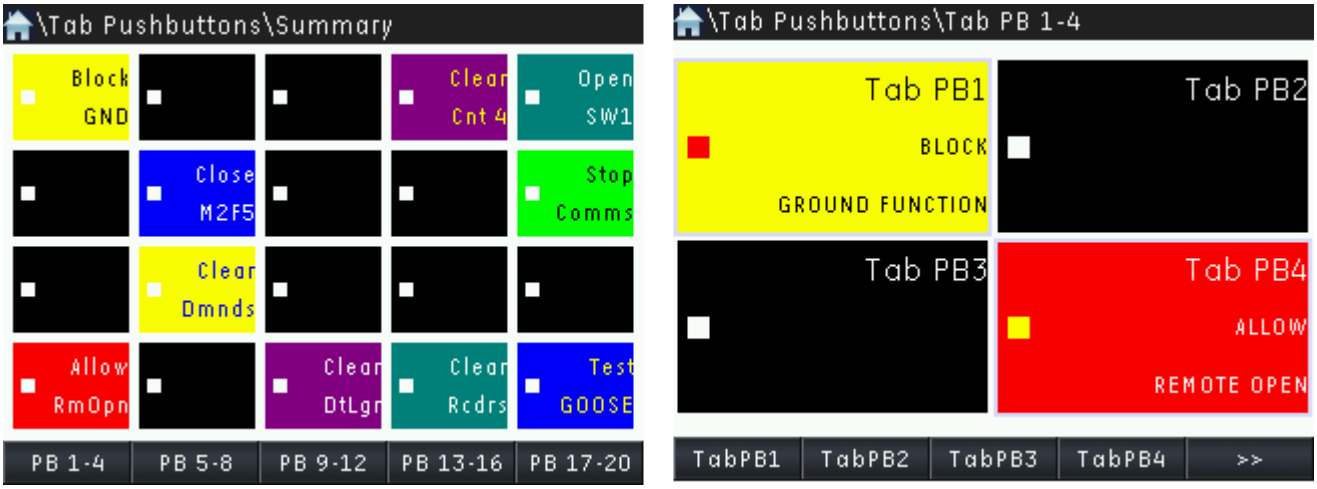

Figure 304: Tab pushbutton summary (left) and detailed view (right)

Only the tab pushbuttons that are not set to Disabled are shown in color; labels for the tab pushbuttons are shown for both active and disabled pushbuttons if labels have been configured. (Configure tab pushbuttons from ***Device*** > ***Front Panel*** > ***Tab PBs*** > ***Tab PB1(X)***.)

When the actual button is pressed, the button on the screen is highlighted in blue and the PB [X] PRESS operand becomes active. Although a disabled pushbutton can be pressed, no action is taken and its operands are not activated. Pressing ESCAPE returns the screen to Tab Pushbutton summary page. The Short Text for each Tab Pushbutton is used on the Summary Page.

Pressing >> shows the next set of tab pushbuttons. For example, when in the page with pushbuttons 1 to 4, pressing >> will navigate to the screen with pushbuttons 5 to 8. Press >> to cycle through all five pushbutton screens. To go from page 2 to page 1, press >> 4 times to cycle through and navigate to page 1 with pushbuttons 1 to 4. Alternatively, escape to the overall summary screen and navigate to any desired page of pushbuttons.

14.3 AUTORECLOSE

The TOTAL SHOT COUNT and SHOT CNT LAST RST D/T are stored in non-volatile memory, which can be restored after reboot. All statuses can be cleared by the command in ***RECORDS*** > ***CLEAR RECORDS*** > ***AUTORECLOSE 1(X)***.

Path: ***Status*** > ***Autoreclose 1(X)***

Shot Number in Effect

Range: 0 to 65535 in steps of 1

The present shot number which the Autoreclose scheme is using is displayed in the SHOT NUMBER IN EFFECT value. If the scheme has reached Lockout, the display is the shot number after which a Trip caused Lockout.

Shots Remaining

Range: 0 to 65535 in steps of 1

The SHOTS REMAINING value displays the number of reclose shots that can still be performed. The value displayed is contained in the Shot Limit memory. Each time a reclose shot is performed, in a given sequence, this Shot Limit is reduced by one. The Shot Limit can also be reduced to any given value less than the programmed value by the current supervision function or by user setting (AR1 Reduce Maximum to 1, 2 or 3).

Shot Rate per Hour

Range: 0 to 65535 sh/hrin steps of 1

The number of reclosures in the past hour is shown in the SHOT RATE PER HOUR value.

Shot Cnt Last Rst D/T

Range: MM/DD/YY HH:MM

Default: 01/01/08 00:00:00

The TOTAL SHOT COUNT value shows the total number of reclosures since the SHOT CNT LAST RST D/T.

14.4 BREAKER STATUS

The status of the breaker/breakers is displayed individually. If the selected trip output relay is Form A-type, the status of the breaker Trip and Close circuitry is also displayed here. The screen also includes the total accumulated arcing current information for the breaker.

Path:*Status* > *Breaker* > *Breaker X Status*

STATE

Range: Not Configured, Opened, Closed, Disconnected, State Unknown

The Unknown state is displayed upon discrepancy of the 52a and 52b contacts for more than 30 milliseconds.

Range: Not Set, Fail, OK

The Close coil state is displayed when Form -A output relays are used, and Close Coil monitoring is enabled.

BKR TROLLEY STATE

Range: Not Configured, Opened, Closed, State Unknown

TRIP COIL

Range: Not Set, Fail, OK

The Trip Coil state is displayed when Form -A output relays are used, and Trip Coil monitoring is enabled.

CLOSE COIL

Range: Not Set, Fail, OK

The Close coil state is displayed when Form -A output relays are used, and Close Coil monitoring is enabled.

TOTAL ARCING CURRENT

Range: 0.00 to 42949672.95 kA2-cyc in steps of 0.01

The measure of arcing current from all three phases during breaker trips. Refer to the Breaker Arcing Current element description (under ***Setpoints*** > ***Monitoring*** > ***Breaker***) for more details.

14.5 INFORMATION

Path: ***Status*** > ***Information*** > ***Relay Info***

The Information pages display fixed device information. the pages are divided into three sections: Main CPU, Comms CPU, and Hardware Versions.

Main CPU

The Information related to the Main CPU is displayed here.

Path: ***Status*** > ***Information*** > ***Relay Info*** > ***Main CPU***

- **Order Code:** The installed Order Code
- **Product Serial #:** The relay serial number
- **Hardware Revision:** The hardware revision of the relay
- **Firmware Version:** The firmware version of the Main CPU
- **Firmware Date:** The Main CPU firmware build date in the format mm/dd/yyyy
- **Firmware Time:** The Main CPU firmware build time
- **Boot 1/2 Version:** The boot 1/2 code version of the Main CPU
- **Boot 1/2 Date:** The Main CPU boot 1/2 code build date in the format mm/dd/yyyy
- **Boot 1/2 Time:** The Main CPU boot 1/2 code build time
- **MAC Address 1:** The MAC address for copper Ethernet port 1
- **Remote CANBUS RMIO:** The commissioned value of the CANBUS IO is displayed here. If the relay has never been commissioned then the value is None, i.e. default = None and Range = 6 alphanumeric characters.
- **NUM of RMIO RTDs:** The number of remote RTDs detected

Comms CPU

The Information related to the Comms CPU is displayed here.

Path: ***Status*** > ***Information*** > ***Relay Info*** > ***Comms CPU***

- **Comms CPU FW Version:** The firmware version of the Comms CPU
- **Comms CPU Firmware Date:**The Comms CPU firmware build date in the format mm/dd/yyyy
- **Comms CPU Firmware Time:** The Comms CPU firmware build time
- **Boot Version:** The boot code version of the Comms CPU
- **Boot Date:** The Comms CPU boot code build date in the format mm/dd/yyyy
- **Boot Time:** The Comms CPU boot code build time
- **MAC Address 1:** The MAC address for Ethernet port 4
- **MAC Address 2:** The MAC address for Ethernet port 5

Hardware versions

Path: ***Status*** > ***Information*** > ***Relay Info*** > ***Hardware Versions***

The Information related to the relay hardware is displayed here.

Hardware Versions	
FPGA Firmware Version	03:14:10:31
IO F CPLD	05:14:12:09
IO G CPLD	05:14:12:09
AN J CPLD	08:14:12:03
AN K CPLD	08:14:12:03
Display CPLD	02:13:05:10

Figure 305: Information for Hordware Versions

- **FPGA Firmware Version:** The firmware version of the FPGA
- **IO F CPLD:** The version of the CPLD in IO slot F
- **IO G CPLD:** The version of the CPLD in IO slot G
- **AN J CPLD:** The version of the CPLD in analog slot J
- **AN K CPLD:** The version of the CPLD in analog slot K
- **Display CPLD:** The version of the CPLD of the display

Environment

The Information related to Environmental is displayed here.

> *Note:*
> *The Temperature Display setpoint can be changed from Celsius to Fahrenheit under **Setpoints** > **Device** > **Installation**.*

Path: ***Status*** > ***Information*** > ***Environment***

- **Instantaneous Temperature:** The most recent temperature measurement taken by the EAM.
- **Firmware Version:** The software version of the EAM module found in the relay.
- **Last Poll Date/ Time:** The date and time on which the last measurements were recorded in the format MM/DD/YY and HH/MM/SS.
- **Average Humidity:** The average of all the humidity measurements taken over time (last 1 hr) by the EAM.
- **Maximum Humidity:** The maximum humidity measurement taken by the EAM since it began recording data.
- **Minimum Humidity:** The minimum humidity measurement taken by the EAM since it began recording data.
- **Average Ambient Temp:** The average of all the instantaneous temperature measurements taken over time (last 1 hr) by the EAM.
- **Maximum Ambient Temp:** The maximum temperature taken by the EAM since it began recording data.
- **Minimum Ambient Temp:** The minimum temperature taken by the EAM since it began recording data.
- **Humidity (e.g. <30%):** The accumulated amount of time (hrs) that the humidity measured by the EAM stayed in the range specified.
- **Temp (e.g. <=-20°C):** The accumulated amount of time (hrs) that the temperature measured by the EAM stayed in the range specified.
- **Temp and Humidity (e.g. >40°C and <55%):** The accumulated amount of time (hrs) that the temperature and humidity measured by the EAM stayed in the ranges specified.
- **Surge Count:** The number of surge (>500 V/1.2/50 µS) events that have occurred since the EAM started recording data.

The Information related to settings changes and settings file history is displayed here.

Settings Audit

Path: ***Status*** > ***Information*** > ***Settings Audit***

- **Last Setting Change:** The date and time of the last setting change.
- **File Modified:**
- **File Received:**
- **File Origin:**
- **File Name:**

14.6 COMMUNICATIONS STATUS

14.6.1 GOOSE

The relay supports 16 GOOSE transmissions and 64 GOOSE receptions each with 64 items per transmission or reception. Non-structured GOOSE is supported. Each item within the GOOSE message can be a digital or analog value. Messages are launched within one scan of a digital point status change or an analog exceeding its deadband.

The server supports a subset of the server features described in part 7.2 of the IEC61850 standard.

Goose Messaging

The details are shown in the table below:

Service	Launch Speed*	Support for Programmable time to live	# of Tx	# of Rx	Test Bit Support	Number of items in each transmission or reception	Number of remote inputs per relay
Configurable GOOSE	Within 2 ms (1 CPU scan)*	Time to live programmable from 1000 to 60000 ms	16	64	Y	64 Data Items per Data Set	32

* Launch speed is measured by comparing the time stamp in SOE of digital remote output status change to the time stamp of message seen on the network by a computer who's clock is synchronized by an IRIG-B card to the same IRIG-B source as the relay.

> *Note:*
> *IRIG-B is not available for the 859*

14.6.2 COMMUNICATIONS STATUS SETTINGS

REMOTE INPUTS

Path:*Status* > *Communications* > *Remote Inputs*

The present state of the 32 remote inputs are shown here. The state displayed is the remote point unless the remote device has been established to be Offline in which case the value shown is the programmed default state for the remote input.

GGIO1 INDICATIONS

Path:*Status* > *Communications* > *GGIO1 Indications*

The present state of the 32 GGIO1 Indications are shown here. There are up to 32 GGIO indications that can be used to map any FlexLogic operand into the IED 61850 information model. Default value is "Off".

GOOSE STATUS

Path: ***Status* > *Communications* > *GOOSE Status***

Range: OFF, ON

Default: OFF

This setting indicates GOOSE communications are being received. A ***GOOSE STATUS*** of "ON" indicates successful receipt of the last GOOSE packet. A ***GOOSE STATUS*** of "OFF" indicates the communications link has failed, with the speed this setting changes determined by the Update Time setting configured under GOOSE Transmission.

GOOSE HEADER

Path:***Status*** > ***Communications*** > ***GOOSE HDR Status***

Range: OFF, ON

Default: OFF

This setting validates the GOOSE packet structure. A ***GOOSE HEADER STATUS*** of “ON” indicates that the structure of the last GOOSE packet was valid.

GOOSE ANALOG

Path:***Status*** > ***Communications*** > ***GOOSE Analog AV***

FLOAT 1 to 24

Range:

Default: 0.0

SINT32 1 to 8

Range:

Default: 0

IEC 61850 STATUS

Path:***Status*** > ***Communications*** > ***IEC 61850 Status***

COMMS NOT VALIDATED OK

Range: NO, YES

Default: NO

COMMS NOT VALIDATED DONE

Range: YES, NO

Default: YES

COMMS VALIDATED OK

Range: YES, NO

Default: YES

COMMS VALIDATED DONE

Range: YES, NO

Default: YES

MAIN NOT VALIDATED OK

Range: NO, YES

Default: NO

MAIN NOT VALIDATED DONE

Range: YES, NO

Default: YES

MAIN VALIDATED OK

Range: YES, NO

Default: YES

MAIN VALIDATED DONE

Range: YES, NO

Default: YES

NOT RUNNING.ERROR CID

Range: NO, YES

Default: NO

RUNNING.DEFAULT CID

Range: NO, YES

Default: NO

RUNNING.SAVING CID TO FLASH

Range: NO, YES

Default: NO

CID HANDLING DONE

Range: YES, NO

Default: YES

NUMBER OF CONNECTED CLIENTS

Default: 0

CLIENT 1(8) IP ADDRESS

Range: 0, 0XFFFFFFFF

Default: 0

ACTIVITY STATUS

The communication state for each enabled communication type is shown by its value. The main CPU and Comms software sets/resets the active bits for all enabled communication types. The communication state bits are not latched.

Path:***Status*** > ***Communications*** > ***Activity Status***

SERIAL MODBUS

Range: NONE, ACTIVE

Default: NONE

ETHERNET MODBUS

Range: NONE, ACTIVE

Default: NONE

> *Note:*
> *The **MODBUS ACTIVITY TIMEOUT** specifies the minimum time without Modbus communication. This timeout is used to declare the Modbus 'Loss of Communication' state. The **MODBUS ACTIVITY TIMEOUT** must be set to a value other than 0 for the Serial Modbus and Ethernet Modbus Activity Status to work properly.*

> *Note:*
> ***MODBUS ACTIVITY TIMEOUT** is set under:**Setpoints** > **Device** > **Communications** > **Modbus Protocol***

CONNECTIONS

Path:***Status*** > ***Communications*** > ***Connections***

MMS TCP - Maximum

Range: 0 to 99 in steps of 1

Default: 0

MMS TCP - Remaining

Range: 0 to 99 in steps of 1

Default: 0

Modbus TCP - Maximum

Range: 0 to 99 in steps of 1

Default: 0

Modbus TCP - Remaining

Range: 0 to 99 in steps of 1

Default: 0

DNP TCP - Maximum

Range: 0 to 99 in steps of 1

Default: 0

DNP TCP - Remaining

Range: 0 to 99 in steps of 1

Default: 0

IEC - 104 - Maximum

Range: 0 to 99 in steps of 1

Default: 0

IEC - 104 - Remaining

Range: 0 to 99 in steps of 1

Default: 0

OPC - UA - Maximum

Range: 0 to 99 in steps of 1

Default: 0

OPC - UA - Remaining

Range: 0 to 99 in steps of 1

Default: 0

SFTP - Maximum

Range: 0 to 99 in steps of 1

Default: 0

SFTP - Remaining

Range: 0 to 99 in steps of 1

Default: 0

14.7 OTHER STATUS SETTINGS

Switches

Path: Status > Switches

SWITCH 1(X)

Range: Not Configured, Opened, Closed, Intermittent, Discrepancy

Default: Not Configured

Last Trip Data

There is no Enabling/Disabling of this feature. It is always ON.

Path: Status > Last Trip Data

CAUSE

Range: Off, Any FlexLogic Operand

Default: No trip to Date

EVENT

Range: 0 to 4294967295 in steps of 1

Default: 0

DATE

Range: MM/DD/YYYY HH:MM

Default: 01/01/08 00:00:00

PARAMETER 1 to 64

Range: -2147483648 to 2147483647 in steps of 1

Default: 0

Arc Flash

Path: Status > Arc Flash > Arc Flash 1

The status value shows the state of the given Flex operand related to Arc Flash protection.

Light 1(4) PKP

Range: ON, OFF

HS Phase IOC PKP A/B/C

Range: ON, OFF

HS Ground IOC PKP

Range: ON, OFF

Arc Flash OP

Range: ON, OFF

Contact Inputs

Path: Status > Contact Inputs

The status of the Contact Inputs is shown here (see device menu via the menu path). The Off/On display indicates the logic state of the Contact Input.

Output Relays

Path: Status > Output Relays

The status of all output relays is shown here, see above. In the Parameter column, the value indicates the label on the output terminal. The Value column indicates the present ON or OFF state of the output relay.

Virtual Inputs

Path: Status > Virtual Inputs 1(X)

The state of all virtual inputs is shown here, see next figure. The value for each Virtual Input is shown on the control panel graphically as a toggle switch in either the On (|) state or the Off (O) state.

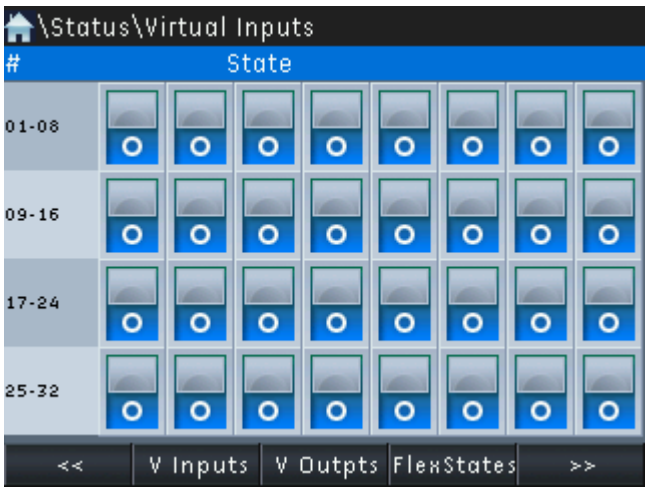

Figure 306: Status of Virtual Inputs, HMI

PARAMETER	VALUE
Virtual Input 1 ()	Off
Virtual Input 2 ()	Off
Virtual Input 3 ()	Off
Virtual Input 4 ()	Off
Virtual Input 5 ()	Off
Virtual Input 6 ()	Off
Virtual Input 7 ()	Off
Virtual Input 8 ()	Off
Virtual Input 9 ()	Off

Figure 307: Status of Virtual Inputs, EnerVista D&I Setup software

Virtual Outputs

Path: ***Status*** > ***Virtual Outputs***

The state of all virtual outputs is shown here, see next figure. The value for each Virtual Output is shown on the control panel graphically as a toggle switch in either the On (|) state or the Off (O) state.

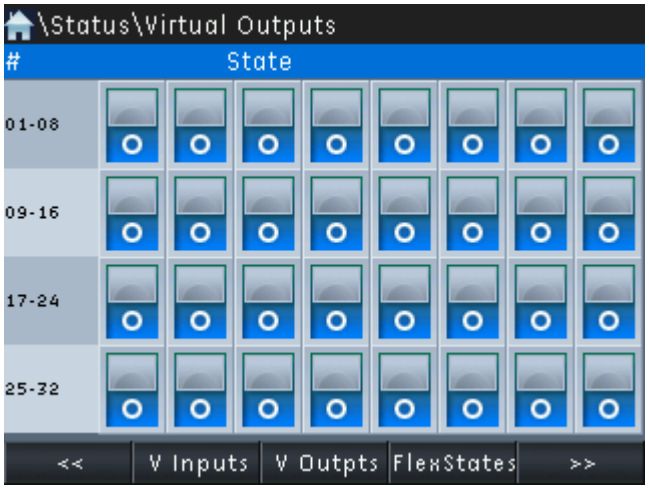

Figure 308: Status of Virtual Outputs, HMI

PARAMETER	VALUE
Virtual Output 1 ()	Off
Virtual Output 2 ()	Off
Virtual Output 3 ()	Off
Virtual Output 4 ()	Off
Virtual Output 5 ()	Off
Virtual Output 6 ()	Off
Virtual Output 7 ()	Off
Virtual Output 8 ()	Off

Figure 309: Status of Virtual Outputs, EnerVista D&I Setup software

Flex State

Path: Status > Flex States

There are 256 Flex state bits available. The status value indicates the state of the given Flex state bit.

Device Status

The general status of system components is displayed here.

Path: Status > Device Status

RUNNING, SAVING CID to FLASH

Range: YES, NO

Default: NO

CID HANDLING DONE

Range: YES, NO

Default: YES

SELF-TEST FAULT

Range: YES, NO

Default: NO

MAINTENANCE

Range: YES, NO

Default: NO

IN SERVICE

Range: YES, NO

Default: YES

PICKUP STATE

Range: YES, NO

Default: YES

BREAKER X CONNECTED

Range: YES, NO

Default: YES

BREAKER X CLOSED

Range: YES, NO

Default: NO

BREAKER X TRIPPED

Range: YES, NO

Default: NO

ALARM

Range: YES, NO

Default: NO

TRIP

Range: YES, NO

Default: NO

ACTIVE GROUP

Range: SP Group 1-6 Active

Default: SP Group 1 Active

Clock Status

Path: Status > Clock

SYSTEM CLOCK

Range: MMM DD YY HH:MM:SS

RTC SYNC SOURCE

Range: None, Port 4 PTP Clock, Port 5 PTP Clock, IRIG-B, SNTP Server 1, SNTP Server 2

The RTC SYNC SOURCE actual value is the time synchronizing source the relay is using at present.

> *Note:*
> *RIG-B is not available for the 859*

PTP Status

The present values of the PTP protocol are displayed here.

Path:Status > PTP

Grandmaster ID is the grandmaster Identity code being received from the present PTP grandmaster, if any. When the relay is not using any PTP grandmaster, this actual value is zero. The grandmaster Identity code is specified by PTP to be globally unique, so one can always know which clock is grandmaster in a system with multiple grandmaster-capable clocks.

RTC Accuracy is the estimated maximum time difference at present in the Real Time Clock (RTC), considering the quality information imbedded in the received time signal, how long the relay has had to lock to the time source, and in the case of time signal interruptions, the length of the interruption. The value 999,999,999 indicates that the magnitude of the estimated difference is one second or more, or that the difference cannot be estimated.

Port 4 (5) PTP State is the present state of the port's PTP clock. The PTP clock state is:

- DISABLED: If the port's function setting is Disabled
- NO SIGNAL: If enabled but no signal from an active master has been found and selected
- CALIBRATING: If an active master has been selected but lock is not at present established
- SYNCH'D (NO PDELAY): If the port is synchronized, but the peer delay mechanism is non-operational
- SYNCHRONIZED: If the port is synchronized

HMI Display

The HMI Display menu option opens a virtual HMI Display window within the EnerVista D&I Setup software. The virtual HMI display provides front panel access to the relay with clickable buttons and realtime display of the front panel, including navigation and viewing relay settings, screens, and LEDs.

Path:Status > HMI Display

> *Note:*
> *The HMI Display functionality is not available with the Advanced Cybersecurity option*

> *Note:*
> *IRIG-B is not available for the 859*

CHAPTER 15

METERING

15.1 CHAPTER OVERVIEW

This chapter provides some information about the device maintenance.

This chapter contains the following sections:

Chapter Overview 697
Metering Overview 698
Metering Summary 701
Impedance/admittance 702
Currents 703
Neutral IOC 705
Voltages 706
Frequency 709
Harmonics 711
Synchrocheck 712
Power functions 713
Energy 717
Demand 720
Power Demand 721
Thermal Capacity 722
Transient Ground Fault Detection 723
CT Supervision (CTS) 724
Voltage Transformer Fuse Failure 725
Arc Flash 726
Resistance Temperature Detectors 727
Resistance Temperature Detectors 728
Resistance Temperature Detectors 729
Resistance Temperature Detectors 730
Analog Inputs 731
FlexElements 732

15.2 METERING OVERVIEW

All phasors calculated by 8 Series relays and used for protection, control and metering functions are rotating phasors, that maintain the correct phase angle relationships with each other at all times.

For display and oscillography purposes, all phasor angles in a given relay are referred to an AC input channel pre-selected as the phase A voltage. If there is no voltage input, the phase A current is used for angle reference. The phase angle of the reference signal always display zero degrees and all other phase angles are relative to this signal. If the preselected reference signal is not measurable at a given time, the phase angles are not referenced.

The phase angles are always presented as negative values in the lagging direction as illustrated in the following.

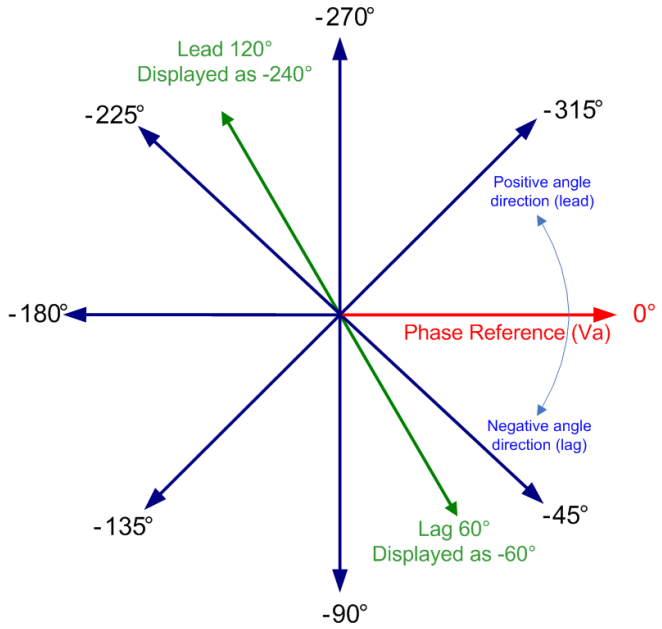

Figure 310: Phase Angle Measurement 8 Series Convention

The relay measures all RMS (root mean square) currents and voltages, frequency, and all auxiliary analog inputs. Other values like neutral current, phasor symmetrical components, power factor, power (real, reactive, apparent), are derived. A majority of these quantities are recalculated every protection pass and perform protection and monitoring functions. Displayed metered quantities are updated approximately three (3) times a second for readability. All phasors and symmetrical components are referenced to the A-N voltage phasor for wye-connected VTs; to the A-B voltage phasor for delta-connected VTs; or to the phase A current phasor when no voltage signals are present.

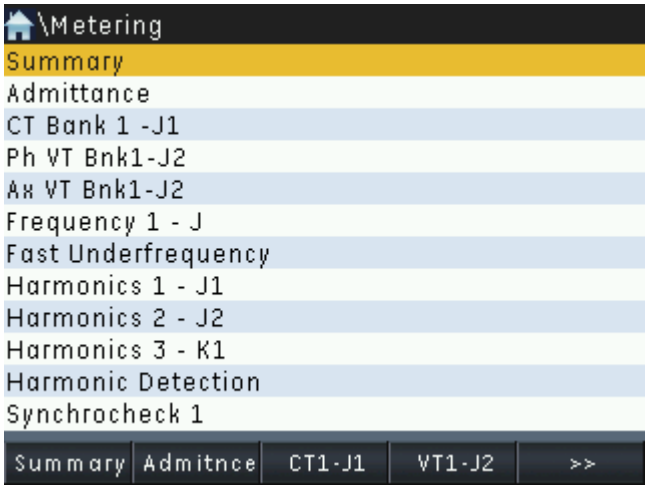

Figure 311: An example of the Metering menu (not representative of all models)

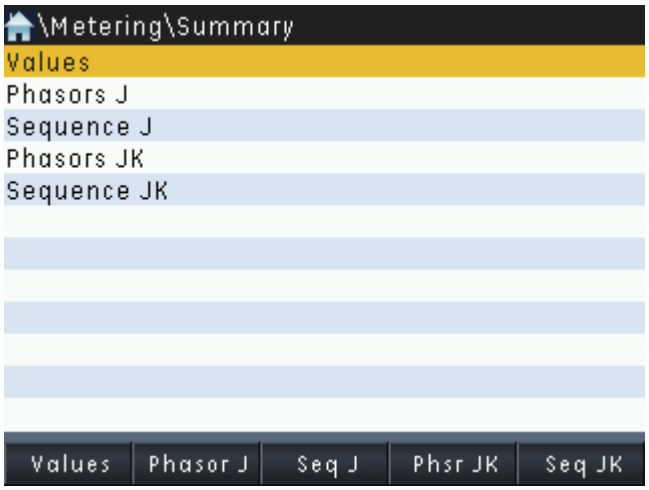

Figure 312: An example of the Metering Summary submenu

All the measured values can be viewed on the front panel display or monitored by remote devices through the communication system. An example of the HMI display showing actual currents is shown here.

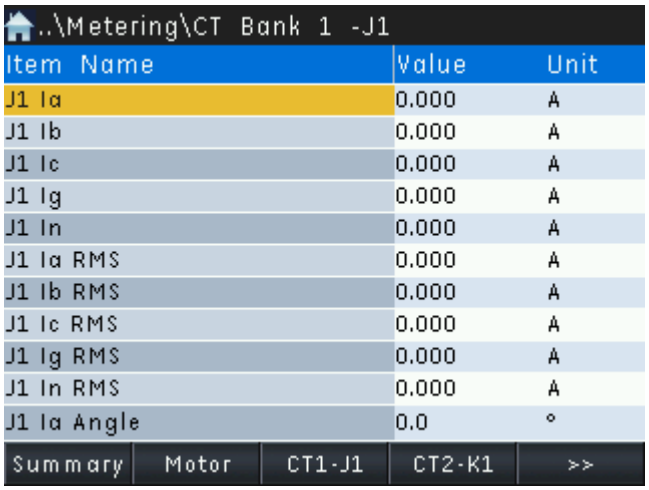

Figure 313: An example of HMI display showing actual currents

The measured values can also be displayed in the PC (EnerVista D&I Setup software). An example follows.

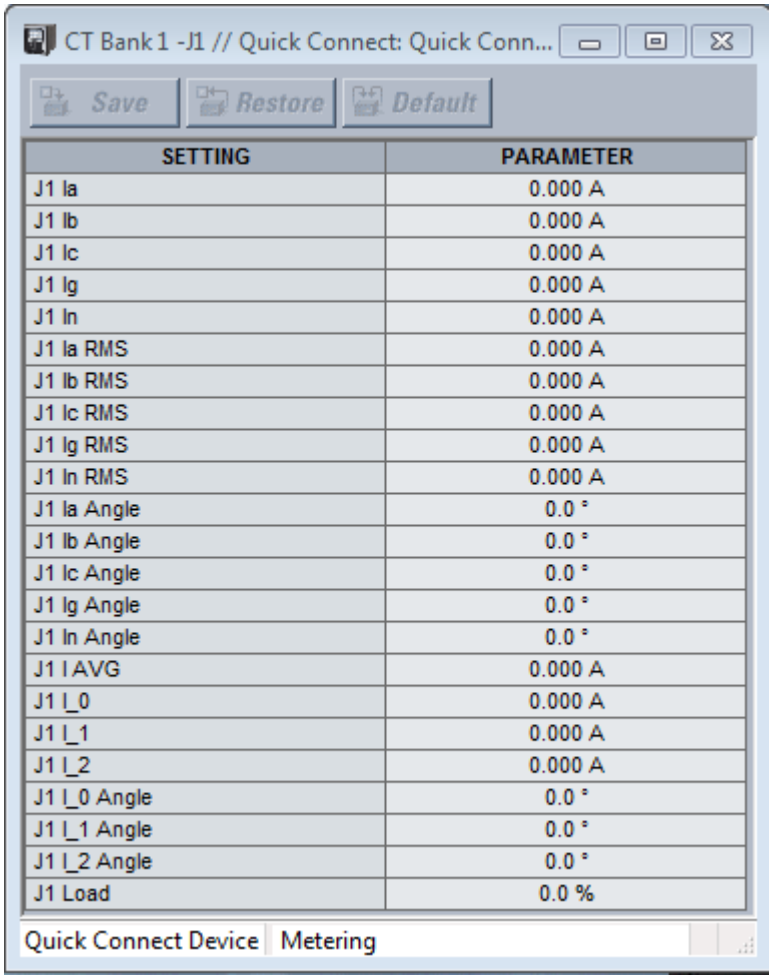

SETTING	PARAMETER
J1 Ia	0.000 A
J1 Ib	0.000 A
J1 Ic	0.000 A
J1 Ig	0.000 A
J1 In	0.000 A
J1 Ia RMS	0.000 A
J1 Ib RMS	0.000 A
J1 Ic RMS	0.000 A
J1 Ig RMS	0.000 A
J1 In RMS	0.000 A
J1 Ia Angle	0.0 °
J1 Ib Angle	0.0 °
J1 Ic Angle	0.0 °
J1 Ig Angle	0.0 °
J1 In Angle	0.0 °
J1 I AVG	0.000 A
J1 I_0	0.000 A
J1 I_1	0.000 A
J1 I_2	0.000 A
J1 I_0 Angle	0.0 °
J1 I_1 Angle	0.0 °
J1 I_2 Angle	0.0 °
J1 Load	0.0 %

Figure 314: Current Metering Screen

The complete list of actual values available in the Metering menu is covered in the following sections.

15.3 METERING SUMMARY

Path: ***Metering*** > ***Summary***

The Metering Summary menu consists of three display screens, including a graphical presentation of key phasor quantities as shown below:

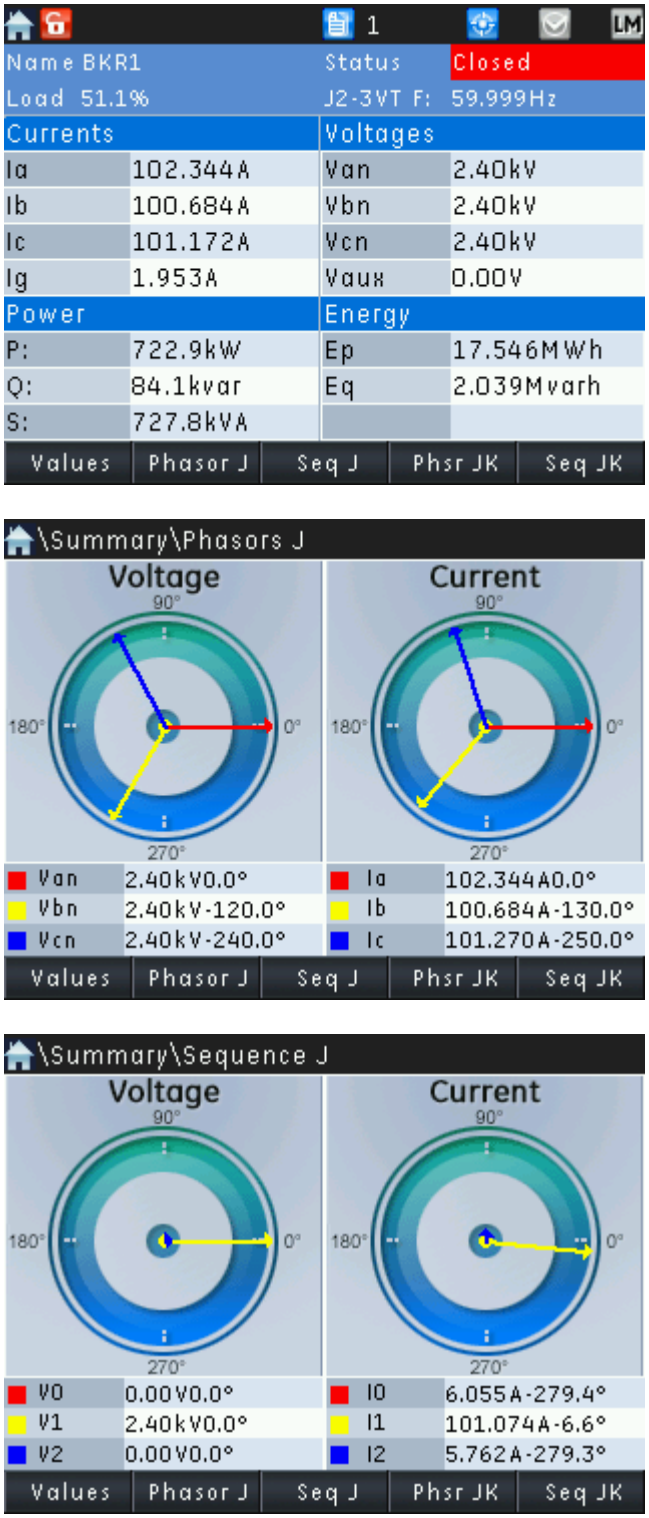

Figure 315: Metering summary screens

15.4 IMPEDANCE/ADMITTANCE

15.4.1 NEUTRAL ADMITTANCE

Path: ***Metering*** > ***Admittance*** > ***Neutral Admittance 1[X]***

N*trl Admit Mag*

Range: 0.00 to 230,000.00 mS in steps of 0.01 mS

Default: 0.00 mS

This value represents the magnitude of the neutral admittance seen by the relay.

Ntrl Admit Angle

Range: -359.9° to 359.9° in steps of 0.1°

Default: 0.0°

This *value represents the* angle of the neutral admittance.

Ntrl Conductance

Range: -230,000.00 to 230,000.00 mS in steps of 0.01 mS

Default: 0.00 mS

This value represents the magnitude of the neutral admittance seen by the relay.

Ntrl Susceptance

Range: -230,000.00 to 230,000.00 mS in steps of 0.01 mS

Default: 0.00 mS

This value represents the magnitude of the neutral susceptance seen by the relay.

15.5 CURRENTS

> *Note:*
> *The number of Currents supported is order code dependent.*

The CT bank names shown are set in the CT Bank Name setpoints under ***Setpoints*** > ***System*** > ***Current Sensing*** > ***CT Bank X***.

> *Note:*
> *Below is a complete list of quantities. The quantities visible to you will depend on the model and order code*

Path: ***Metering*** > ***CT Bank 1-J1 (CT Bank 2-K1) (CT Bank 3-K2) (CT Bank 4-JK)***

Phase A/B/C (Ia/Ib/Ic) 0.000 A

Range: 0.000 to 12000.000 A

Ground (Ig)

Range: 0.000 to 12000.000 A

Sensitive Ground (Isg)

Range: 0.000 to 1200.000 A

Neutral (In)

Range: 0.000 to 12000.000 A

Phase A/B/C (Ia/Ib/Ic RMS)

Range: 0.000 to 12000.000 A

Ground (Ig RMS)

Range: 0.000 to 12000.000 A

Sensitive Ground (Isg RMS)

Range: 0.000 to 1200.000 A

Neutral (In RMS)

Range: 0.000 to 12000.000 A

Phase A/B/C Angle (Ia/Ib/Ic Angle)

Range: 0.0 to 359.9°

Ground Angle (Ig Angle)

Range: 0.0 to 359.9°

Sensitive Ground Angle (Isg Angle)

Range: 0.0 to 359.9°

Neutral Angle (In Angle)

Range: 0.0 to 359.9°

Average (I AVG)

Range: 0.000 to 12000.000 A

Zero Sequence (I_0)

Range: 0.000 to 12000.000 A

Positive Sequence (I_1)

Range: 0.000 to 12000.000 A

Negative Sequence (I_2)

Range: 0.000 to 12000.000 A

Zero Sequence (I_0 Angle)

Range: 0.0 to 359.9°

Positive Sequence Angle (I_1 Angle)

Range: 0.0 to 359.9°

Negative Sequence Angle (I_2 Angle)

Range: 0.0 to 359.9°

Ground Differential (Igd)

Range: 0.000 to 12000.000 A

Ground Differential Angle (Igd Angle)

Range: 0.0 to 359.9°

Load (I%) (not applicable to all models)

Range: 0.0 to 100.0%

> *Note:*
> *Percent of load-to-trip is calculated from the phase with the highest current reading. This metered value is the ratio between the highest phase current injected for the current bank, and the lowest pickup setting among all Phase Timed and Instantaneous overcurrent elements. If all these elements are disabled, the value displayed is* `0`*.*

> *Note:*
> *For example, if the lowest pickup is 0.5 xCT, and the highest injected phase current is 1 xCT, the displayed value for load-to-trip is 200%.*

15.6 NEUTRAL IOC

Path: Metering > Neutral IOC

Neutral IOC1(X) Iop

Range: 0.000 to 12000.000 A

Default: 0 A

This value represents the operating quantity of the Neutral IOC element. For more details, see Neutral Instantaneous Overcurrent Protection.

15.7 VOLTAGES

Note:
The number of Voltages supported is order code dependent.

Note:
The VT bank names shown are set in the Phase VT Bank Name setpoints under ***Setpoints*** > ***System*** > ***Voltage Sensing*** > ***VT****.*

Note:
Below is a complete list of quantities. The quantities visible to you will depend on the model and order code

Path: ***Metering*** > ***VT Bank*** > ***Ph VT Bnk1-J2 (Ph VT Bnk2-K2)***

Phase A (Van)

Range: 0.00 to 600000.00 V

Phase B (Vbn)

Range: 0.00 to 600000.00 V

Phase C (Vcn)

Range: 0.00 to 600000.00 V

Phase to Phase AB (Vab)

Range: 0.00 to 600000.00 V

Phase to Phase BC (Vbc)

Range: 0.00 to 600000.00 V

Phase to Phase CA (Vca)

Range: 0.00 to 600000.00 V

Neutral (Vn)

Range: 0.00 to 600000.00 V

Phase A (Van RMS)

Range: 0.00 to 600000.00 V

Phase B (Vbn RMS)

Range: 0.00 to 600000.00 V

Phase C (Vcn RMS)

Range: 0.00 to 600000.00 V

Phase to Phase AB (Vab RMS)

Range: 0.00 to 600000.00 V

Phase to Phase BC (Vbc RMS)

Range: 0.00 to 600000.00 V

Phase to Phase CA (Vca RMS)

Range: 0.00 to 600000.00 V

Neutral (Vn RMS)

Range: 0.00 to 600000.00 V

Phase A Angle (Van Angle)

Range: 0.0 to 359.9°

Phase B Angle (Vbn Angle)

Range: 0.0 to 359.9°

Phase C Angle (Vcn Angle)

Range: 0.0 to 359.9°

Phase to Phase AB Angle (Vab Angle)

Range: 0.0 to 359.9°

Phase to Phase BC Angle (Vbc Angle)

Range: 0.0 to 359.9°

Phase to Phase CA Angle (Vca Angle)

Range: 0.0 to 359.9°

Neutral Angle (Vn Angle)

Range: 0.0 to 359.9°

Average Phase to Phase (V AVG L-L)

R*ange: 0.00 to 600000.00 V*

Average Phase (V AVG L-N)

Range: 0.00 to 600000.00 V

Zero Sequence (V0)

Range: 0.00 to 600000.00 V

Positive Sequence (V1)

Range: 0.00 to 600000.00 V

Negative Sequence (V2)

Range: 0.00 to 600000.00 V

Zero Sequence Angle (V0 Angle)

Range: 0.0 to 359.9°

Positive Sequence Angle (V1 Angle)

Range: 0.0 to 359.9°

Negative Sequence Angle (V2 Angle)

Range: 0.0 to 359.9°

Path: ***Metering*** > ***Aux VT Bank*** > ***Ax VT Bnk1-J2 (Ax VT Bnk2-K2)***

Auxilary Voltage (Vaux)

Range: 0.00 to 600000.00 V

Auxilary Voltage RMS (Vaux RMS)

Range: 0.00 to 600000.00 V

Auxilary Voltage Angle (Vaux Angle)

Range: 0.0 to 359.9°

15.8 FREQUENCY

Note:
Below is a complete list of quantities. The quantities visible to you will depend on the model and order code

Path: ***Metering*** > ***Frequency 1 - J***

Frequency (Current Input J1-CT)

Range: 2.000 to 90.000 Hz

CT Frequency

Range: 20 to 100 Hz

CT Frequency Rate of Change

Range: -20.00 to 20.00 Hz/s

Frequency Rate of Change (Current Input J1-CT)

Range: -20.00 to 20.00 Hz/s

Frequency (Phase Voltage Input J2-3VT)

Range: 2.000 to 90.000 Hz

3 VT Frequency

Range: 20 to 100 Hz

3 VT Frequency Rate of Change

Range: -20.00 to 20.00 Hz/s

Frequency Rate of Change (Phase Voltage Input J2-3VT)

Range: -20.00 to 20.00 Hz/s

Frequency (Auxiliary Voltage Input J2-Vx)

Range: 2.000 to 90.000 Hz

Frequency Rate of Change (Auxiliary Voltage Input J2-Vx)

Range: -20.00 to 20.00 Hz/s

Frequency (Phase Voltage Input LEA1)

Range: 2.000 to 90.000 Hz

Frequency Rate of Change (Phase Voltage Input LEA1)

Range: -20.00 to 20.00 Hz/s

Frequency (Phase Voltage Input LEA2)

Range: 2.000 to 90.000 Hz

Frequency Rate of Change (Phase Voltage Input LEA2)

Range: -20.00 to 20.00 Hz/s

15.8.1 HIGH-SPEED FREQUENCY

Path: ***Metering*** > ***Hi-speed Freq***

The high speed frequency and high speed rate of change monitored in the High-Speed Underfrequency element are displayed here only if the High Speed Frequency is Enabled under the Common Setup section.

- High Speed Frequency
- High Speed ROCOF

Range: -120.00 to 120.00 Hz/s in steps of 0.01

HIGH-SPEED FREQ MAG

Range: 40.00 to 70.00 Hz in steps 0.01 Hz

Default: 60.00 Hz

HIGH-SPEED ROCOF

Range: -120.00 to 120.00 Hz/sec in steps 0.01 Hz/sec

Default: 0.00 Hz/sec

4TH HIGH-SPEED FREQ MAG

Range: 40.00 to 70.00 Hz in steps 0.01 Hz

Default: 60.00 Hz

4TH HIGH-SPEED ROCOF

Range: -120.00 to 120.00 Hz/sec in steps 0.01 Hz/sec

Default: 0.00 Hz/sec

15.8.2 FAST UNDERFREQUENCY

Path: ***Metering*** > ***Fast Underfrequency***

FAST FREQUENCY

Range: 20.000 to 70.000 Hz in steps of 0.01

FAST RATE OF CHANGE

Range: -120.00 to 120.00 Hz/s in steps of 0.01

15.9 HARMONICS

> *Note:*
> *The number of Harmonics supported is dependent on the model and the order code.*

All values relate to phase currents measured on the input cards (J1, etc.).

Path: ***Metering*** > ***Harmonics 1 - J1***

Phase A/B/C Total Harmonic Distortion (Phase A/B/C THD)

Range: 0.0 to 100.0%

Phase A/B/C Second Harmonic (Phase A/B/C 2)

Range: 0.0 to 100.0%

Phase A/B/C Third Harmonic (Phase A/B/C 3)

Range: 0.0 to 100.0%

...

Phase A/B/C Twenty Fifth Harmonic (Phase A/B/C 25)

Range: 0.0 to 100.0%

15.9.1 HARMONIC DETECTION

The second, third, fourth, and fifth harmonics per phase are shown here. The harmonics values are presented in percent relative to the fundamental magnitude.

It should be noted that the similar harmonic ratios and THD values are also displayed under the general metering menus, **Harmonics 1 - J1 Current**, **Harmonics 3 - K1 Current**, or **Harmonics 4 – K2 Current**, where all values are calculated every three cycles. The THD values used in the Harmonic Detection element are the same to the general metering, so they are not shown here again. The harmonic ratios in the Harmonic Detection element are calculated and updated every protection pass.

Path: ***Metering*** > ***Harmonic Detection***

HD Ph A/B/C 2nd Harm

Range: 0.00 to 100.0%

HD Ph A/B/C 3rd Harm

Range: 0.00 to 100.0%

HD Ph A/B/C 4th Harm

Range: 0.00 to 100.0%

HD Ph A/B/C 5th Harm

Range: 0.00 to 100.0%

15.10 SYNCHROCHECK

Path: ***Metering*** > ***Synchrocheck***

Bus Voltage Magnitude (Bus Volts Magnitude)

Range: 0.00 to 600000.00 V

Bus Voltage Angle (Bus Volts Angle)

Range: 0.0 to 359.9°

Bus Voltage Frequency (Bus Volts Frequency)

Range: 2.000 to 90.000 Hz

Line Voltage Magnitude (Line Volts Magnitude)

Range: 0.00 to 600000.00 V

Line Voltage Angle (Line Volts Angle)

Range: 0.0 to 359.9°

Line Voltage Frequency (Line Volts Frequency)

Range: 2.000 to 90.000 Hz

Voltage Difference (Volts Difference)

Range: 0.00 to 600000.00 V

Voltage Angle Difference (Angle Difference)

Range: 0.0 to 359.9°

Voltage Frequency Difference (Frequency Difference)

Range: 2.000 to 90.000 Hz

15.11 POWER FUNCTIONS

15.11.1 POWER

The following figure illustrates the convention used for measuring power and energy in the 8 Series devices.

Note:
Power 1 is calculated using 3-phase J1 Currents & 3-phase J2 Voltages.

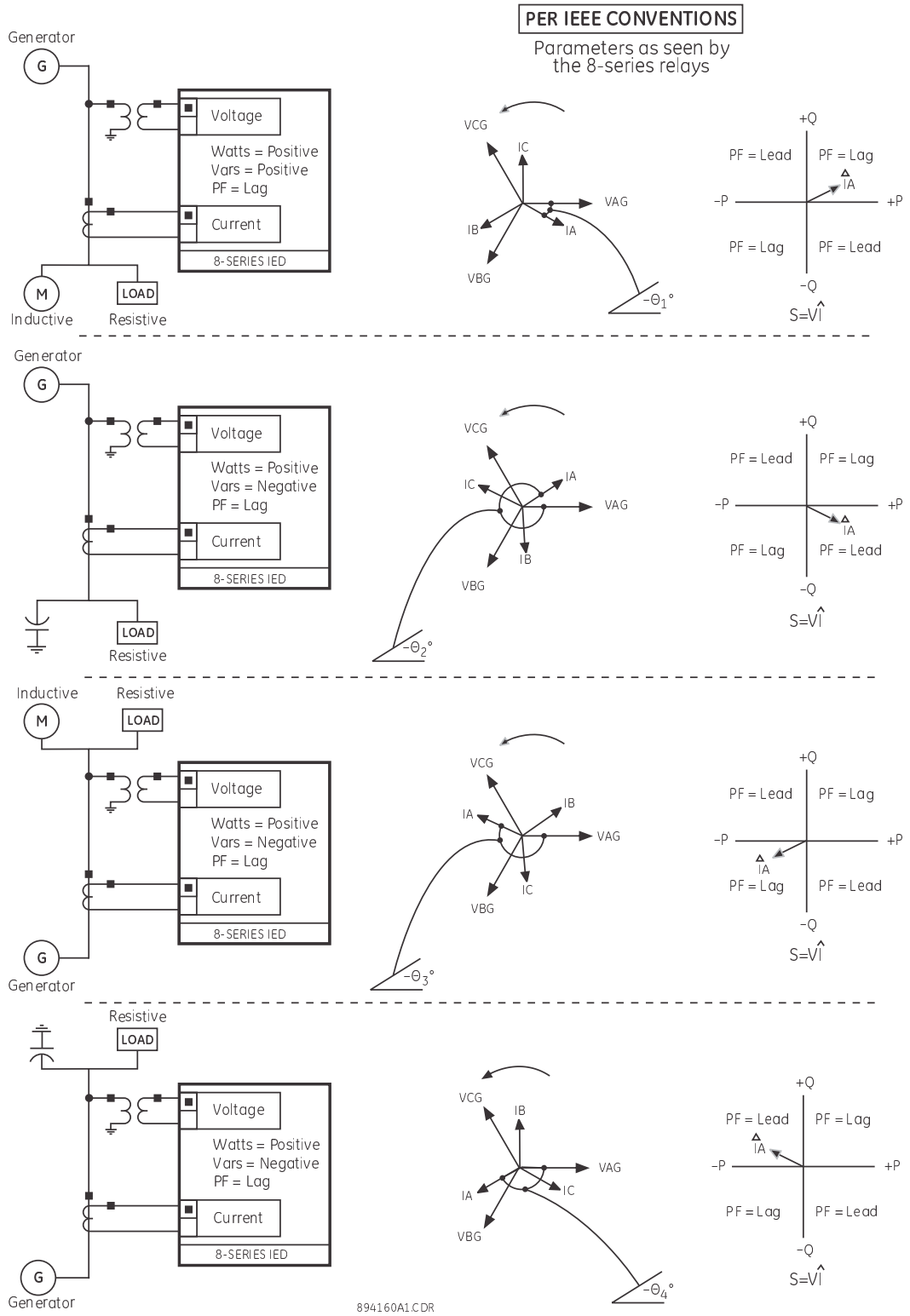

Figure 316: Flow direction of signed values for watts and VARs

Path: ***Metering*** > ***Power 1(X)***

Real Total (Real)

Range: - 214748364.8 kW to 214748364.7 kW

Reactive Total (Reactive)

Range: - 214748364.8 kvar to 214748364.7 kvar

Apparent Total (Apparent)

Range: 0 kVA to 214748364.7 kVA

Phase A Real (Ph A Real)

Range: - 214748364.8 kW to 214748364.7 kW

Phase B Real (Ph B Real)

Range: - 214748364.8 kW to 214748364.7 kW

Phase C Real (Ph C Real)

Range: - 214748364.8 kW to 214748364.7 kW

Phase A Reactive (Ph A Reactive)

Range: - 214748364.8 kvar to 214748364.7 kvar

Phase B Reactive (Ph B Reactive)

Range: - 214748364.8 kvar to 214748364.7 kvar

Phase C Reactive (Ph C Reactive)

Range: - 214748364.8 kvar to 214748364.7 kvar

Phase A Apparent (Ph A Apparent)

Range: 0 kVA to 214748364.7 kVA

Phase B Apparent (Ph B Apparent)

Range: 0 kVA to 214748364.7 kVA

Phase C Apparent (Ph C Apparent)

Range: 0 kVA to 214748364.7 kVA

Power Factor Total (PF)

Range: 0.01 Lag to 1.00 to 0.01 Lead

Phase A Power Factor (Ph A PF)

Range: 0.01 Lag to 1.00 to 0.01 Lead

Phase B Power Factor (Ph B PF)

Range: 0.01 Lag to 1.00 to 0.01 Lead

Phase C Power Factor (Ph C PF)

Range: 0.01 Lag to 1.00 to 0.01 Lead

15.11.2 POWER FACTOR

Path: ***Metering*** > ***Power Factor***

The power factor value input to the power factor element(s) is displayed here. Note that the value may not be equal to the power factor value displayed under ***Metering*** > ***Power 1*** since the supervision conditions are applied in the element.

POWER FACTOR 1(X)

Range: -0.99 to 1.00 in steps of 0.01

Default: 0.00

15.11.3 DIRECTIONAL POWER

Path: ***Metering*** > ***Directional Power***

The effective operating quantities of the sensitive directional power elements are displayed here. The display may be useful to calibrate the feature by compensating the angular errors of the CTs and VTs with the use of the ***RCA*** and ***CALIBRATION*** settings.

Directional Power 1

Range: -214748364.8 kW to 214748364.7 kW

Default: 0.0 kW

...

Directional Power X

Range: -214748364.8 kW to 214748364.7 kW

Default: 0.0 kW

15.11.4 WATTMETRIC GROUND FAULT

Path: ***Metering*** > ***Wattmetric Ground Fault***

The menu displays the wattmetric ground fault element operating power value.

Wattmetric Ground Fault X

Range: -21474836.48 W to 21474836.47 W

Default: 0.00 W

15.12 ENERGY

15.12.1 ENERGY (X)

Note:
Below is a complete list of quantities. The quantities visible to you will depend on the model and order code.

Path: ***Metering*** > ***Energy*** > ***Energy 1(X)***

Reset Energy D/T

Range: MM/DD/YY HH:MM:SS

Positive Watt Hours (Pos WattHours)

Range: 0.000 MWh to 4294967.295 MWh

Pos WattHours Cost

D*efault: 0.00 $ to 42949672.95 $*

Negative Watt Hours (Neg WattHours)

Range: 0.000 MWh to 4294967.295 MWh

Neg WattHours Cost

Default: 0.00 $ to 42949672.95 $

Positive Var Hours (Pos VarHours)

Range: 0.000 Mvarh to 4294967.295 Mvarh

Negative Var Hours (Neg VarHours)

Range: 0.000 Mvarh to 4294967.295 Mvarh

15.12.2 ENERGY LOG

Path: ***Metering*** > ***Energy 1*** > ***Energy Log***

Pwr1 Last Event Pos WattHours

Range: 0.000 to 4294967.295 MWh in steps of 0.001 MWh

Default: 0.000 MWh

This is the logged value of Pos WattHours energy accumulated during the last event or shift interval. The shift interval refers to the time between the last two reset commands, where the reset command refers to the rising edge of the FlexLogic operand set under setpoint Reset Event Energy (***Power Systems*** > ***Power Sensing***). An application example is the monitoring of the total energy accumulated at the end of an event or a shift interval. An event/shift interval can be defined by the breaker status operand (open or closed).

Pwr1 Last Event Neg WattHours

Range: 0.000 to 4294967.295 MWh in steps of 0.001 MWh

Default: 0.000 MWh

This value shows the logged value of Neg WattHours energy accumulated during the last event or shift interval.

Pwr1 Last Event Pos VarHours

Range: 0.000 to 4294967.295 Mvarh in steps of 0.001 Mvarh

Default: 0.000 Mvarh

This value shows the logged value of Pos VarHours energy accumulated during the last event or shift interval.

Pwr1 Last Event Neg VarHours

Range: 0.000 to 4294967.295 Mvarh in steps of 0.001 Mvarh

Default: 0.000 Mvarh

This value shows the logged value of Neg VarHours energy accumulated during the last event or shift interval.

Pwr1 Today Pos WattHours

Range: 0.000 to 4294967.295 MWh in steps of 0.001 MWh

Default: 0.000 MWh

This value shows the current value of Pos WattHours energy accumulated since the start of the day, that is time 00:00 (midnight). At the end of the day this value resets to zero and the total accumulated energy value is logged as Yesterday Pos WattHours.

Pwr1 Today Neg WattHours

Range: 0.000 to 4294967.295 MWh in steps of 0.001 MWh

Default: 0.000 MWh

This value shows the current value of Neg WattHours energy accumulated since the start of the day.

Pwr1 Today Pos VarHours

Range: 0.000 to 4294967.295 Mvarh in steps of 0.001 Mvarh

Default: 0.000 Mvarh

This value shows the current value of Pos VarHours energy accumulated since the start of the day.

Pwr1 Today Neg VarHours

Range: 0.000 to 4294967.295 MWh in steps of 0.001 MWh

Default: 0.000 MWh

This value shows the current value of Neg VarHours energy accumulated since the start of the day.

Pwr1 Yesterday Pos WattHours

Range: 0.000 to 4294967.295 MWh in steps of 0.001 MWh

Default: 0.000 MWh

This value shows the current value of Pos WattHours energy accumulated during the previous day. This value is logged at the end of the day, midnight, or 23:59 hrs.

Pwr1 Yesterday Neg WattHours

Range: 0.000 to 4294967.295 MWh in steps of 0.001 MWh

Default: 0.000 MWh

This value shows the current value of Neg WattHours energy accumulated during the previous day.

Pwr1 Yesterday Pos VarHours

Range: 0.000 to 4294967.295 Mvarh in steps of 0.001 Mvarh

Default: 0.000 Mvarh

This value shows the current value of Pos VarHours energy accumulated during the previous day.

Pwr1 Yesterday Neg VarHours

Range: 0.000 to 4294967.295 MWh in steps of 0.001 MWh

Default: 0.000 MWh

This value shows the current value of Neg VarHours energy accumulated during the previous day.

Note:
All Energy Log values can be reset to zero using the command Energy Log Data under ***Records*** > ***Clear Records*** *or by the Flexlogic operand programmed by the setpoint* ***ENERGY LOG DATA*** *under* ***Device*** > ***Clear Records****. The Reset Energy Log D/T in either case is recorded and displayed.*

15.13 DEMAND

15.13.1 CURRENT DEMAND

> *Note:*
> *The number of Current Demand supported is Order Code dependent.*

The relay measures Current Demand on each phase, and three phase Demand for real, reactive, and apparent power. These parameters can be monitored to reduce supplier Demand penalties or for statistical metering purposes. Demand calculations are based on the measurement type selected under ***Monitoring*** > ***Functions*** > ***Demand***. For each quantity, the relay displays the Demand over the most recent Demand time interval, the maximum Demand since the last maximum Demand reset, and the time and date stamp of this maximum Demand value. Maximum Demand quantities can be reset to zero at ***Records*** > ***Clear Records*** > ***Max Current Demand***.

15.13.1.1 CURRENT DEMAND 1(X)

Path: ***Metering*** > ***Current Demand 1(X)***

Cur1 Ph A/B/C Demand

Range: 0.000 to 12000.000 A

Cur1 Max Ph A/B/C Demand

Range: 0.000 to 12000.000 A

Cur1 D/T Ph A/B/C Demand MM/DD/YY HH:MM:SS

15.14 POWER DEMAND

For real/reactive/apparent power quantities, the relay displays the Demand values over the most recent time interval. The time interval refers to the time since the last reset.

Power demand quantities can be reset to zero by either of the following methods:

- ***Records*** > ***Clear Records*** command - resets the corresponding demand quantities.
- Using any operand programmed under the setpoint Reset Demand (***Monitoring*** > ***Functions*** > ***Demand***) - resets the max and min demand values
- using any operand programmed under ***Device*** > ***Clear Records*** - resets the max and min demand values.

Note:
If average current drops below 0.02 x CT, calculation of the minimum real/reactive/apparent demand is blocked, and metering remains at the level measured at the time of the block.

Path: ***Metering*** > ***Power Demand x***

RESETR DMD DATE/TIME

Range: MM/DD/YY 00:00:00

REAL DEMAND (REAL DMD)

Range: 0.0 kW to 214748364.7 kW

MAX REAL DMD

Range: 0.0 kW to 214748364.7 kW

DATE/TIME REAL DMD

Range: MM/DD/YY 00:00:00

REACTIVE DEMAND (REACTIVE DMD)

Range: 0.0 kvar to 214748364.7 kvar

MAX REACTIVE DMD

Range: 0.0 kvar to 214748364.7 kvar

D/T REACTIVE DMD

Range: MM/DD/YY 00:00:00

APPARENT DEMAND (APPARENT DMD)

Range: 0.0 kVA to 214748364.7 kVA

MAX APPARENT DMD

Range: 0.0 kVA to 214748364.7 kVA

D/T APPARENT DMD

Range: MM/DD/YY 00:00:00

15.15 THERMAL CAPACITY

The menu displays the thermal capacity values in percentage format. These values can be cleared by the commands in ***Records*** > ***Clear Records*** or in ***Device*** > ***Clear Records***.

Path: ***Metering*** > ***Thermal Capacity***

PHASE A THERMAL 1 CAP

Range: 0.0 to 150.0 %

Default: 0.0 %

PHASE B THERMAL 1 CAP

Range: 0.0 to 150.0 %

Default: 0.0 %

PHASE C THERMAL 1 CAP

Range: 0.0 to 150.0 %

Default: 0.0 %

PHASE A THERMAL 2 CAP

Range: 0.0 to 150.0 %

Default: 0.0 %

PHASE B THERMAL 2 CAP

Range: 0.0 to 150.0 %

Default: 0.0 %

PHASE C THERMAL 2 CAP

Range: 0.0 to 150.0 %

Default: 0.0 %

15.16 TRANSIENT GROUND FAULT DETECTION

Path: ***Metering*** > ***Transient Ground FD 1***

The menu displays the wattmetric ground fault element operating power value.

TRANSIENT P (ACTIVE POWER)

Range: -5000.00 W to 5000.00 W in steps of 0.01 kW

Default: 0.01 k

TRANSIENT Q (REACTIVE POWER)

Range: -5000.00 W to 5000.00 W in steps of 0.01 kVar

Default: 0.00 kVar

TRANSIENT P MAX

Range: -5000.00 W to 5000.00 W in steps of 0.01 kW

Default: 0.00 kW

TRANSIENT Q MAX

Range: -5000.00 W to 5000.00 W in steps of 0.01 kVar

Default: 0.00 kVar

TGFD VN RMS AVG

Range: 0.00 to 10.00 x VT in steps of 0.01

Default: x VT

TGFD VN RMS INC

Range: 0.00 to 10.00 x VT in steps of 0.01

Default: x VT

15.17 CT SUPERVISION (CTS)

Path: ***Metering*** > ***CT Supervision*** > ***CT Supervision 1(X)***

CTS X SYM Imin

Range: 0.000 to 120000.000 A in steps of 0.001

Default: 0.000 A

This value is the minimum phase current magnitude of the three phases for the symmetry check in the CT Supervision monitoring element.

CTS X SYM Imax

Range: 0.000 to 120000.000 A in steps of 0.001

Default: 0.000 A

This value is the maximum phase current magnitude of the three phases for the symmetry check in the CT Supervision monitoring element.

CTS X SYM QUOTIENT

Range: 0.00 to 1.00 in steps of 0.01

Default: 0.00

This value is the quotient (I_{min}/I_{max}) from the symmetry check in the CT Supervision element.

CTS DIFF CURRENT

Range: 0.000 to 120000.000 A in steps of 0.001

Default: 0.000 A

This value is the differential current magnitude between the calculated 3I0 and the measured ground current

$$(I_{CTSdiff} = |\overrightarrow{3I_0} - \overrightarrow{I_G}|)$$

The CTS Diff. Current reflects the quantity obtained based on the Diff. IG Polarity setting in the differential check section of the CT Supervision element.

15.18 VOLTAGE TRANSFORMER FUSE FAILURE

Path: Metering\VT Fuse Failure

VTFF 1(2) 3V0 3rd Harm

Range: 0.0 to 100.0%

Default: 0.0 %

This value represents the percentage of third harmonic content in 3V0. This value is calculated based on the Phase VT Secondary

15.19 ARC FLASH

Path: ***Metering*** > ***Arc Flash*** > ***Arc Flash 1***

HS Phase Current A/B/C

Range: 0.00 to 120000.00 A in steps of 0.01

HS Ground Current

Range: 0.00 to 120000.00 A in steps of 0.01

15.20 RESISTANCE TEMPERATURE DETECTORS

Temperature can be displayed in Celsius or Fahrenheit. The selection is made in ***Setpoints > Device > Installation > Temperature Display***.

Path: Metering > RTDs

RTD1(13)

Range: -40 to 250°C (-40 to 482°F)

Temperatures < -40°C are displayed as `Shorted` and temperatures > 250°C are displayed as `Open RTD`.

15.21 RESISTANCE TEMPERATURE DETECTORS

Path: Metering > RRTDs

RRTD1(12)

Range: -40 to 250°C

Temperatures < -40°C or temperatures >250°C are displayed as `Trouble RRTD`

15.22 RESISTANCE TEMPERATURE DETECTORS

Temperature can be displayed in Celsius or Fahrenheit. The selection is made in ***Setpoints > Device > Installation > Temperature Display***.

Path: Metering > RTD Maximums

Reset RTD Date/Time

Range: DD/MM/YY hh/mm/ss

Maximum RTD values can be cleared (reset) by setting the value of ***Setpoints > Records > Clear Records > RTD Maximums*** to ON. Executing this command loads -40°C (or -40°F) as the initial Maximum RTD value.

RTD1(13) Max

Range: -40 to 250°C (-40 to 482°F)

Temperatures < -40°C are displayed as `Shorted` and temperatures > 250°C are displayed as `Open RTD`.

RTD1(13) Max Date/Time

Range: DD/MM/YY hh/mm/ss

15.23 RESISTANCE TEMPERATURE DETECTORS

Temperature can be displayed in Celsius or Fahrenheit. The selection is made in ***Setpoints > Device > Installation > Temperature Display***.

Path: Metering > RTD Maximums

Reset RRTD Date/Time

Range: DD/MM/YY hh/mm/ss

Maximum RTD values can be cleared (reset) by setting the value of ***Setpoints > Records > Clear Records > RRTD Maximums*** to ON. Executing this command loads -40°C (or -40°F) as the initial Maximum RRTD value.

RRTD1(12) Max

Range: -40 to 250°C (-40 to 482°F)

Temperatures < -40°C are displayed as `Shorted` and temperatures > 250°C are displayed as `Open RRTD`.

RRTD1(12) Max Date/Time

Range: DD/MM/YY hh/mm/ss

15.24 ANALOG INPUTS

Path: ***Metering*** > ***Analog Inputs***

Analog Ip x

Range: -500000 to 500000 units in steps of 1

15.25 FLEXELEMENTS

Path: ***Metering*** > ***FlexElements***

The operating signals for the FlexElements are displayed in pu values using the definitions of the base units in the *Definitions of the Base Unit for the FLEXELEMENT* table. This table can be found in ***Setpoints*** > ***FlexLogic*** > ***FlexElements***.

FlexElement Operating Signals:

- FlexEl 1 Op Signal
- FlexEl 2 Op Signal
- FlexEl 3 Op Signal
- FlexEl 4 Op Signal
- FlexEl 5 Op Signal
- FlexEl 6 Op Signal
- FlexEl 7 Op Signal
- FlexEl 8 Op Signal

CHAPTER 16

RECORDS

16.1 CHAPTER OVERVIEW

This chapter contains the following sections:

Chapter Overview	734
Events	735
Transient Records	739
Fault Reports	740
Data Logger	742
Breakers	743
Power Quality	745
Digital Counters	747
Remote Modbus Device	748
Incipient fault counter	751
Clear Records	752

16.2 EVENTS

The relay has an event recorder, which runs continuously. All event records are stored in non-volatile memory such that information is permanently retained. The events are displayed from newest to oldest event. Each event has a header message containing a summary of the event that occurred, and is assigned an event number equal to the number of events that have occurred since the recorder was cleared. The event number is incremented for each new event.

The Event Recorder captures contextual data associated with the last 1024 events listed in chronological order from most recent to oldest. Events for a particular element are captured, if the setpoint ***EVENTS*** is selected as “Enabled”. By default, the ***EVENTS*** setpoint from all elements is enabled.

Path*: Records* > ***Event Records***

The events are cleared by pressing the pushbutton corresponding to the tab CLEAR, or when issuing clear event records command from the general clear records menu.

16.2.1 EVENT VIEWER

The Event Viewer provides a consolidated view of up to 1024 events from a single 8 Series device or up to as many as ten connected 8 Series devices or event files (10 x 1024 events in total).

To open the Event Viewer for a connected device, follow these steps in the EnerVista D&I Setup software:

1. Establish communications with the relay.
2. Select the ***Setpoints*** > ***Records*** > ***Events*** menu item.
3. A small Events window opens displaying the following:
    - Date/Time of Last Clear
    - Events Since Last Clear
    - Date/Time of Last Retrieval
4. In addition, the Event Viewer launches for a detailed view of up to 1024 of the most recent events.

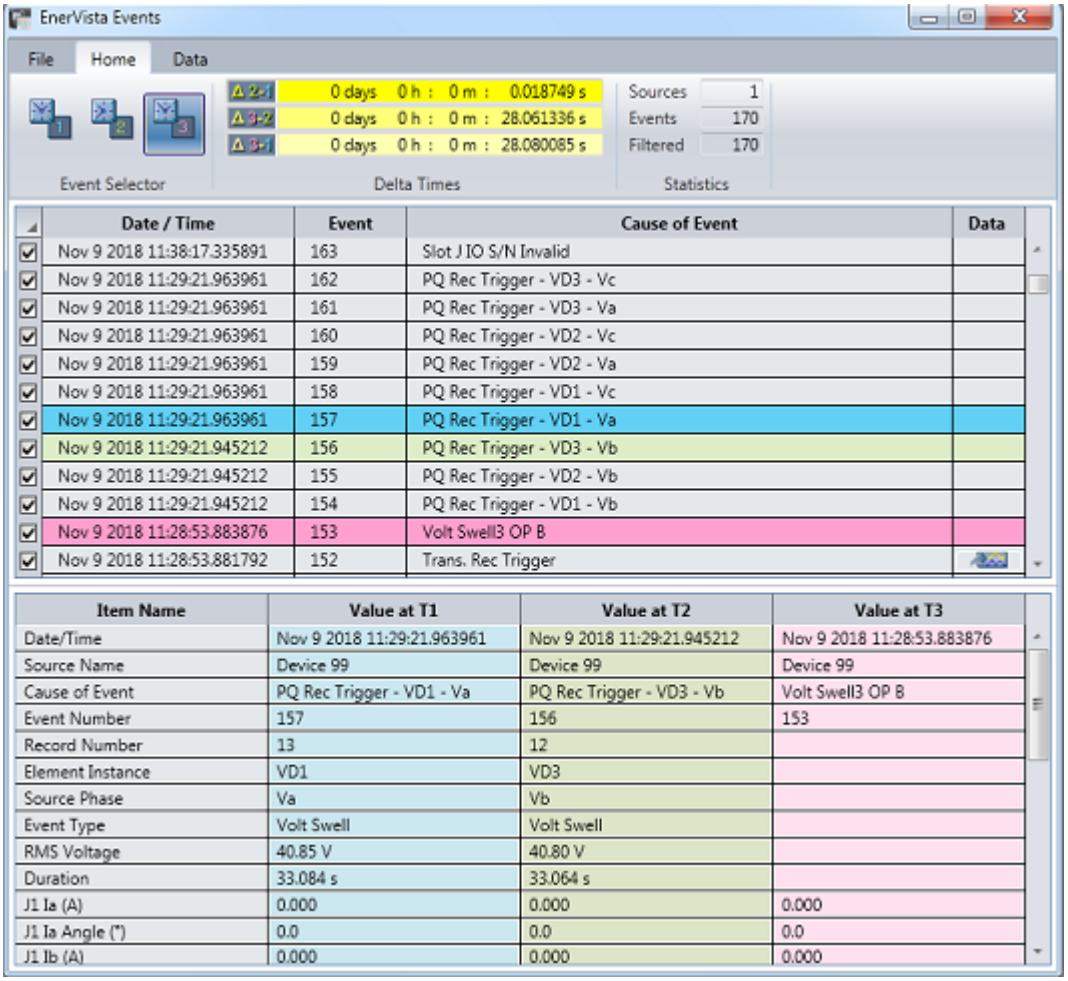

The Event Viewer window runs as a separate application, and can be moved outside of the main window and resized as needed.

If EnerVista D&I Setup software is closed, the Event Viewer remains open but offline (no further events are received from running devices, however event data is still available).

The Event List includes all events in descending chronological order. For multiple sources, a Source column showing the device name or file name is shown between the Date/Time and the Event columns.

To add an additional connected 8 Series relay to the open Event Viewer, follow these steps:

1. Establish communications with the relay.
2. Select the ***Setpoints*** > ***Records*** > ***Events*** menu item.
3. The Event Viewer adds up to 1024 of the most recent events to the open window, labeled with the new device name in the Source column.

The Event column is only shown when **Show Event Numbers** is selected on the **Data** tab.

Date / Time	Source	Event	Cause of Event	Data
Nov 8 2018 16:07:14.989887	Device 99	7	VD1 Rise Armed C	
Nov 8 2018 16:07:14.989887	Device 99	6	VD1 Rise Armed B	
Nov 8 2018 16:07:14.989887	Device 99	5	VD1 Rise Armed A	
Nov 8 2018 16:07:14.989887	Device 99	4	VD1 Rise Armed	
Nov 8 2018 16:06:57.968508	Device 99	3	Clear Start Rec	
Nov 8 2018 16:06:57.712274	Device 99	2	Clear Transt Rec	
Nov 8 2018 16:06:56.572667	Device 99	1	Clear Event Rec	
Nov 8 2018 12:55:18.528669	Device 212	23115	Critical Fail On	
Nov 8 2018 12:55:18.528669	Device 212	23114	In-Service	
Nov 8 2018 12:55:14.751534	Device 212	23111	Relay Not Ready	
Nov 8 2018 12:55:14.750886	Device 212	23113	Critical Fail Off	
Nov 8 2018 12:55:14.750886	Device 212	23112	Out-Of-Service	

On the left side of the Event List a checkbox column with a toggle button at the top allows selection of specific events. Only the selected events are saved or copied by the **Save to File** and **Copy to Clipboard** options in the **File** tab.

Use the following keys to navigate quickly through the Event List:

- **End** scrolls to the bottom of the Event List
- **Home** scrolls to the top of the Event List
- **Page Down** scrolls one page down in the Event List
- **Page Up** scrolls one page up in the Event List

When the Event Viewer and the EnerVista D&I Setup software are both open, new events from connected devices are added to the Event Viewer as they occur and oscillography and fault report records are gradually retrieved from the device, in order of oldest to newest (assuming oscillography records and fault report records are saved in a common location).

Date/Time	Cause of Event		Data
Nov 10 2017 10:20:20.842706	Fault Rpt Trig	Fault report symbol	
Nov 10 2017 10:19:08.006650	Trans. Rec Trigger	Oscillography record symbol	

Oscillography record events (such as Trans. Rec Trigger shown above) have a symbol in the Data column that includes a link to launch the oscillography record in the EnerVista D&I Setup software.

Fault report events (such as Fault Rpt Trig shown above) can be opened in the same manner by clicking the fault report symbol in the Data column.

FILE TAB

Use the **File** tab to open event files in the Event Viewer, save events to a file, or copy events to the clipboard.

- **Open File**: opens a window to browse to an events file (of type .eev, .txt. or .evt) and opens it in the existing Event Viewer window, or in a new Event Viewer window.
  - Check **In New Window** to open the file in a new Event Viewer window.
- **Save to File**: saves the selected events to a file. Hidden (filtered) events are not saved.
  - Select the events to save using the checkboxes on the left of the events list.
  - Check **Include Event Data** to save full details of each event instead of just a summary.
- **Copy to Clipboard**: copies the selected events to the clipboard. Hidden (filtered) events are not copied.
  - Select the events to copy using the checkboxes on the left of the events list.
  - Check **Include Event Data** to copy full details of each event instead of just a summary.

HOME TAB

Use the **Home** tab to select the events shown in the detailed view, measure time between events, and view the current Event Viewer statistics.

By default, the Event Viewer opens displaying the **Home** tab with the last three events selected. Details of these three events are displayed in the lower pane of the Event Viewer window.

To select up to three events from the list displayed in the Event Viewer, follow these steps:

1. From the **Home** tab, choose which event to set by clicking button 1, 2, or 3 above the **Event Selector** label.
2. Click an event from the list of displayed events.
3. The event changes color to match the selected button (blue for 1, green for 2, or red for 3) and the event details display in the lower pane, highlighted in the same color.

The absolute times between the three selected events are displayed above the **Delta Times** label.

The **Statistics** area in the **Home** tab includes the following information:

- **Sources:** the number of event sources (devices and files) currently available.
- **Events**: the number of events being managed by the Event Viewer.
- **Filtered**: the number of events shown after any active filters are applied. (Filters are applied in the **Data** tab).

DATA TAB

Use the **Data** tab to filter the events shown in the Event Viewer.

- **Show Event Numbers**: toggles on and off the event number column in the list of events. The event number can be useful for reconciling events between the Eevnt Viewer and local HMI.
- **Select Event Sources**: provides a drop-down list of all available event sources (devices and files). Uncheck a device or file to hide the associated events from the main list.
- By default events from all sources are shown.
- **Cause of Event Filter**: provides an alphabetized list of all event names, allowing different event types to be shown or hidden.
- By default all events are shown.

16.3 TRANSIENT RECORDS

Path: ***Records*** > ***Transients*** > ***Transient Records***

Using the EnerVista D&I Setup software, select a record and then click the **Launch Viewer** button to view the waveform.

16.4 FAULT REPORTS

The latest fault reports can be displayed.

Path: ***Records*** > ***Fault Reports***

NUMBER OF REPORTS

This value shows the number of reports since the last clear.

LAST TRIP DATE/TIME

Range: MM/DD/YY/ HH:MM:SS

This value is the date and time on which the last report was generated.

LAST CLEAR DATE/TIME

Range: MM/DD/YY/ HH:MM:SS

This value is the date and time on which the record was cleared.

TYPE OF FAULT

Range: N/A, AG, BG, CG, AB, BC, CA, ABG, BCG, CAG, ABC

Default: N/A

This record displays the type of fault.

DISTANCE TO FAULT

Range: 0.00 to 99.99 km/Mile in steps of 0.01 km/Mile

Default: 0.00 km/Mile

This record displays the distance to fault, in kilometers or miles as selected by the UNITS OF LENGTH setpoint.

FAULT REPORT X TIME

Range: MM/DD/YY/ HH:MM:SS

This value is the date and time on which the specified fault report was generated.

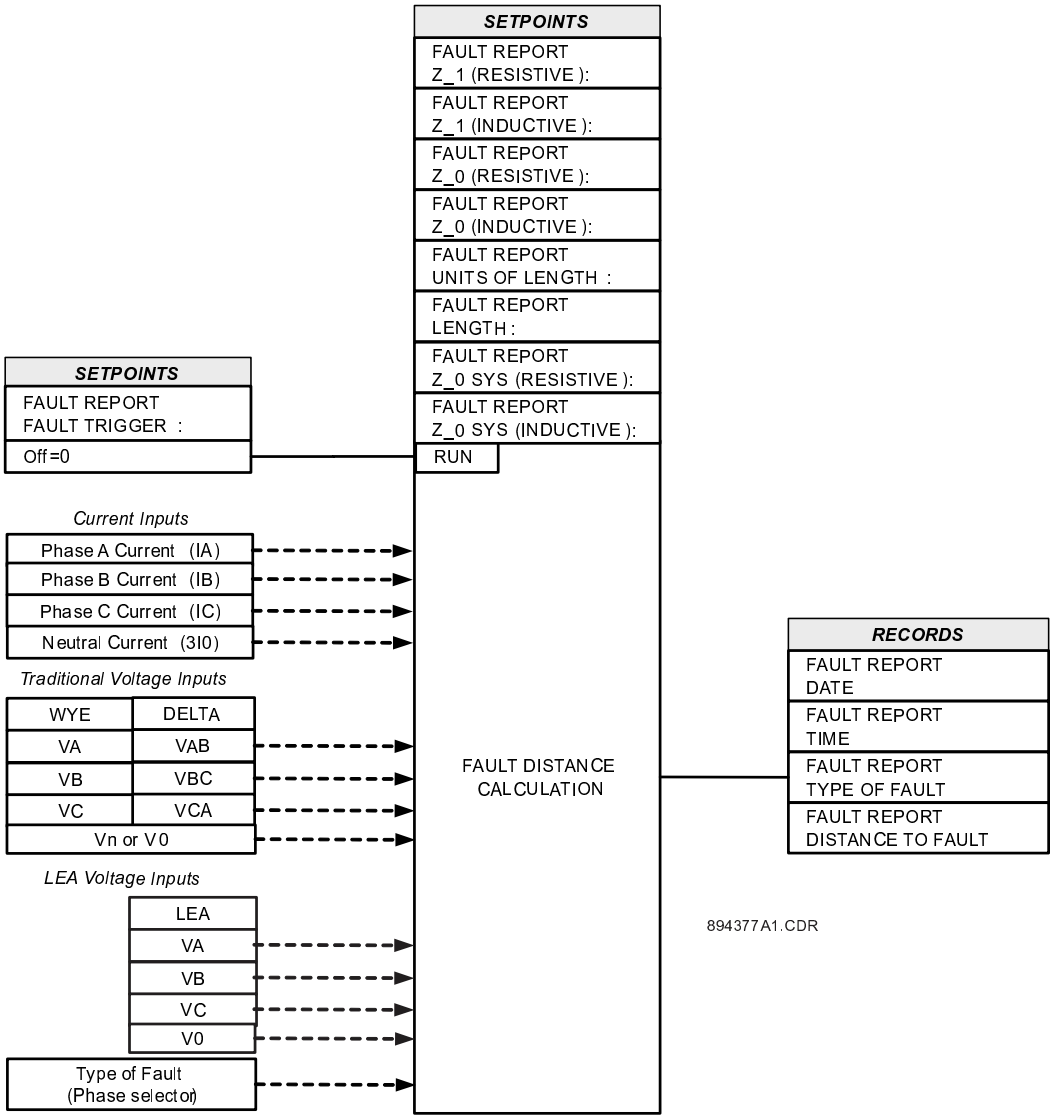

Figure 317: Fault Locator Logic diagram

16.5 DATA LOGGER

The Data Logger record can be retrieved and seen from this window. It displays the oldest and newest timestamps, and the total number of samples captured for all channels programmed in ***Setpoints*** > ***Device*** > ***Data Logger*** menu.

Path: ***Records*** > ***Data Logger***

16.6 BREAKERS

16.6.1 BREAKER ARCING CURRENT

Path: ***Records*** > ***Breakers Records*** > ***Breaker x***

ARCING CURRENT PHASE A

Range: 00.00 TO 42949672.95 kA2-cyc in steps of 0.01

ARCING CURRENT PHASE B

Range: 00.00 TO 42949672.95 kA2-cyc in steps of 0.01

ARCING CURRENT PHASE C

Range: 00.00 TO 42949672.95 Ka2-cyc in steps of 0.01

TOTAL ARCING CURRENT

Range: 00.00 TO 42949672.95 Ka2-cyc in steps of 0.01

16.6.2 BREAKER HEALTH

The menu displays the breaker monitoring values. The latest value, average of last five values and average of values since last reset are recorded, calculated and displayed.

When the DETECTION mode is selected, the values displayed here can be used as the reference for user settings. The values are saved into non-volatile memory to avoid the loss of data during the power down period.

Path: ***Records*** > ***Breakers Records*** > ***Breaker Health***

TOTAL BREAKER TRIPS

Range: 0 to 10000 in steps of 1

TRIPS SINCE LAST RESET

Range: 0 to 10000 in steps of 1

ALARM COUNTER

Range: 0 to 100 in steps of 1

LAST TRIP TIME

Range: 0 TO 4294967295 ms in steps 1

AVG. OF 5 TRIP TIME

Range: 0 TO 4294967295 ms in steps 1

AVG. OF TRIP TIME

Range: 0 TO 4294967295 ms in steps 1

LAST CLOSE TIME

Range: 0 TO 4294967295 ms in steps 1

AVG. OF 5 CLOSE TIME

Range: 0 TO 4294967295 ms in steps 1

AVG. OF CLOSE TIME

Range: 0 TO 4294967295 ms in steps 1

LAST PH A/B/C ARC TIME

Range: 00.00 TO 42949672.95 Ka2-cyc in steps of 0.01

AVG. OF 5 PH A/B/C ARC TIME

Range: 0 TO 4294967295 ms in steps 1

AVG. OF PH A/B/C ARC TIME

Range: 0 TO 4294967295 ms in steps 1

LAST SPRING CHARGE TIME

Range: 0.000 to 6000.000 s in steps of 0.001

AVG. OF 5 CHARGE TIME

Range: 0.000 to 6000.000 s in steps of 0.001

AVG. OF CHARGE TIME

Range: 0.000 to 6000.000 s in steps of 0.001

LAST PH A/B/C ARC ENERGY

Range: 00.00 TO 42949672.95 Ka2-cyc in steps of 0.01

AVG. OF 5 PH A/B/C ARCENER

Range: 00.00 TO 42949672.95 Ka2-cyc in steps of 0.01

AVG. OF PH A/B/C ARC ENERGY

Range: 00.00 TO 42949672.95 Ka2-cyc in steps of 0.01

16.7 POWER QUALITY

From the EnerVista D&I Setup software click **View Records from PQ Event File** to open the file `pqevt.txt` and displays all saved events (maximum 30).

Path: ***Records*** > ***PwrQuality Events*** > ***Event X***

Element Instance

Default: VD1

Range: VD1, VD2, VD3

Source Phase

Default: None

Range: None, Va, Vb, Vc

Event Type

Default: None

Range: None, Volt Sag, Volt Swell

Min Voltage [A,B,C]

Range: 0.00 to 1000000.00 V in steps of 0.01

Default: 0.00 V

For Volt Sag/Swell event Min Voltage [A,B,C] is Minimum Voltage in Phase [A,B,C] recorded during the event duration.

Max Voltage [A,B,C]

Range: 0.00 to 1000000.00 V in steps of 0.01

Default: 0.00 V

For Volt Sag/Swell event Max Voltage [A,B,C] is Maximum Voltage in Phase [A,B,C] recorded during the event duration.

RMS Voltage

Default: 0.00 V

Range: 0.00 to 1000000.00 V in steps of 0.01 V

For Volt Sag events, RMS Voltage is the minimum voltage recorded during the event duration, while for Volt Sag events the RMS Voltage is the maximum voltage recorded during the event duration.

Date/Time

Default: 01/01/70 00:00:00

Range: Date/Time Format (MM/DD/YY HH:MM:SS)

Date/Time is recorded at the end of the Volt Sag or Volt Swell condition.

Duration

Default: 0.000 s

Range: 0.000 to 600.000 s in steps of 0.001

Volt Swell and Volt Sag event Duration is recorded in terms of seconds, and is the total length of time from the rising edge of the pickup to dropout.

Cml. Sag Counter [ANSI]

Range: 0 to 999999 in steps of 1

Default: 0

This is the cumulative sag count value from the last reset.

Cml. Sag Time

Range: HH:MM:SS

Default: 00:00:00

Short Description:

This is the cumulative sag time value from the last reset.

Cml. Swell Counter [ANSI]

Range: 0 to 999999 in steps of 1

Default: 0

This is the cumulative swell count value from the last reset.

Cml. Swell Time

Range: HH:MM:SS

Default: 00:00:00

This is the cumulative swell time value from the last reset.

16.8 DIGITAL COUNTERS

The present status of the sixteen Digital Counters is shown here. The status of each Counter, with the user-defined Counter name, includes the accumulated and frozen counts (the count units label also appears). Also included, is the date and time stamp for the frozen count. The Counter microseconds frozen value refers to the microsecond portion of the time stamp.

Path: ***Records*** > ***Digital Counter 1 (16)***

COUNTER X ACCUMULATED

Range: -2147483648 to 2147483647 in steps of 1

COUNTER X FROZEN

Range: -2147483648 to 2147483647 in steps of 1

DATE/TIME FROZEN

Range: Date/Time Format (MM/DD/YY HH:MM:SS)

Default: 01/01/70 00:00:00

COUNTER X us FROZEN

Range: 0 to 999999 µs in steps of 1

16.9 REMOTE MODBUS DEVICE

Up to 64 FlexAnalog operands and 32 FlexLogic operands are supported in the configurable Remote Modbus Device. Profiles are configured under ***Device*** > ***Communications*** > ***Remote Modbus Device*** > ***Device 1***, with details provided in Chapter 5. Up to 10 format codes enumerations (by default GMD_FC1 to GMD_FC10) can be defined separately for each Modbus Device Profile. For the default BSG3 device profile, 27 analogs and 27 digital operands are pre-configured in the default CID settings file.

All parameters are polled consecutively. Each FlexLogic value can be read from a different Modbus address and bit mask which is then mapped into any of the available 64 bit locations.

Path: ***Records*** > ***Remote Modbus Device*** > ***Device 1*** > ***Status***

DEVICE STATUS

Range: Offline, Online

Default: Offline

The DEVICE STATUS operand is asserted when the last communication attempt has failed. The operand is deasserted following a successful communication attempt.

LAST SUCCESSFUL POLL

Range: MM/DD/YYYY HH:MM:SS

Default: 01/01/2000 00:00

This is a timestamp value for the last successful read. The LAST SUCCESSFUL POLL is updated if the update of all pooled data is successful.

Path: Records > Remote Modbus Device > Device 1 > Digital States

FLEXLOGIC OPERANDS 1-32

Range: Defined by Remote Modbus Device Profile

Default: Off

Up to 32 FlexLogic operands can be shown here.

The displayed text is the FlexLogic name defined in the Remote Modbus Device Editor **Label** field for each Digital Point in the current profile. See ***Device*** > ***Communications*** > ***Remote Modbus Device*** > ***Device 1***.

The value displayed is based on the Enumeration field defined in the Remote Modbus Device Editor for each specific digital point.

\Device 1\Digital States

Item Name	Value	Unit
Status 1	On	
Status 2	On	
Status 3	On	
Status 4	Off	
Status 5	On	
Status 6	On	
Status 7	On	
Status 8	Off	
Status 9	On	
Warning 1	Yes	
Warning 2	Yes	

Status | Digital | Analog

\Device 1\Digital States

Item Name	Value	Unit
Warning 3	Yes	
Warning 4	No	
Warning 5	Yes	
Warning 6	Yes	
Warning 7	Yes	
Warning 8	No	
Warning 9	Yes	
Alarm 1	No	
Alarm 2	No	
Alarm 3	No	
Alarm 4	No	

Status | Digital | Analog

Figure 318: Example of Digital States for the default BSG3 RMD profile

Path: ***Records*** > ***Remote Modbus Device*** > ***Device 1*** > ***Analog Values***

RMD-FLEXANALOG 1-64

Range: -2147483648 to 2147483647 in steps of 1

Default: 0

Up to 64 FlexAnalog operands can be shown here.

The value displayed is based on the Enumeration field defined in the Remote Modbus Device Editor for each specific digital point.

The displayed text is the FlexAnalog name defined in the Remote Modbus Device Editor 'Label' field for each Analog Point in the current profile. See ***Device*** > ***Communications*** > ***Remote Modbus Device*** > ***Device 1***.

The value displayed is based on the Data Type, Multiplier, Decimals, and Units fields defined in the Remote Modbus Device Setpoint for each specific analog point.

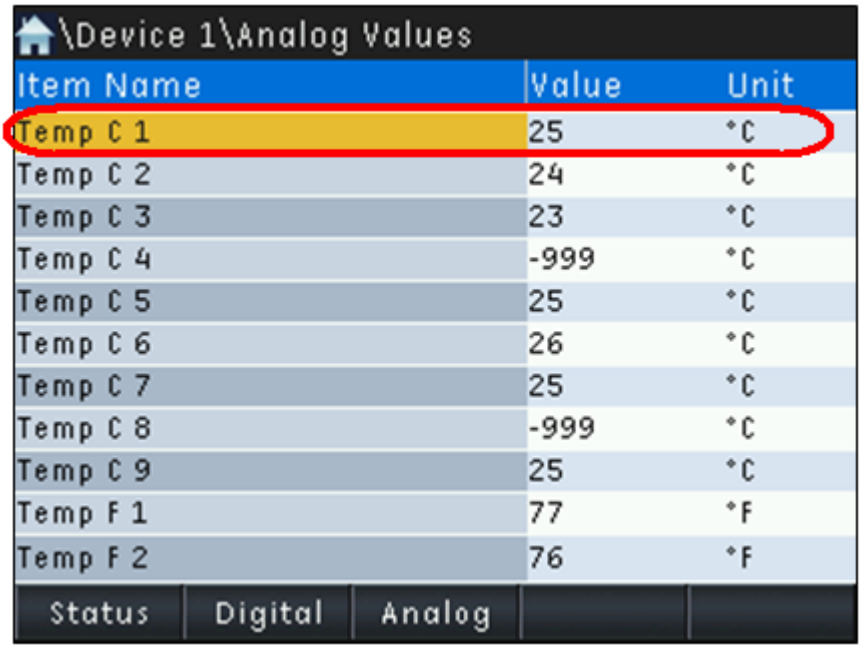

Figure 319: Example for Analog Values of the default BSG3 RMD profile

16.10 INCIPIENT FAULT COUNTER

The number of incipient faults is recorded in a counter. There is one counter for the 850-E and two counters for the 850D

Path: ***Records*** > ***Incipient Fault Counter1(2)***

INCIPIENT FAULT COUNT PH A

Range: 0 to 65535

Default: 0

INCIPIENT FAULT COUNT PH B

Range: 0 to 65535

Default: 0

INCIPIENT FAULT COUNT PH C

Range: 0 to 65535

Default: 0

Note:
Data can be reset from Path: Records\Clear Records\Clear Incipient Fault Counters [X] menu. Changes to any of the incipient cable fault detector settings resets of the number of the incipient faults detected to zero.

16.11 CLEAR RECORDS

The Clear Records command is accessible from the front panel and from the EnerVista D&I Setup software.

Path: ***Device*** > ***Clear Records***

Records can be cleared either by assigning “On” or a FlexLogic operand to the appropriate setting.

With the optional 10 PB Membrane Front Panel all Clear Records commands related to Demand default to PB7 ON. This includes Clear Records for Max Current Demand, Max Real Power Demand, Max Reactive Power Demand and Max Apparent Power Demand.

Note:
The Clear Records command is also available from ***Records*** > ***Clear Records****, however there the allowable settings are only ON and OFF. (FlexLogic operands cannot be used.)*

CHAPTER 17

MAINTENANCE

17.1 CHAPTER OVERVIEW

This chapter provides some information about the device maintenance.

This chapter contains the following sections:

Chapter Overview 754

Environmental Health Report 755

General Maintenance 757

17.2 ENVIRONMENTAL HEALTH REPORT

Prolonged exposure to harsh environments and transient conditions that exceed those stated in the device specifications will reduce the life of the product. The relay has a patented Environmental Awareness Module (EAM) to record environmental data over the life of the product. The module measures temperature, humidity, surge pulses and accumulates the events every hour in pre-determined threshold buckets over a period of 15 years. Using EnerVista D&I Setup software, you can retrieve this data in the form of a histogram. This will help you to quickly identify any changes in the operating condition of installed products and arrange necessary remedial action. An example of a report is provided below.

ENVIRONMENTAL HEALTH REPORT

PRODUCT INFORMATION

Device Summary	
Device Name	Quick Connect Device
Device Type	845 Transformer Protection System
Order Code	845-EP1H1G1HNNAANGMSBC2ESWBN
Firmware Version	1.40
Serial Number	MJ1T13000155

Generated At:	May 14, 2015 03:15 PM

DEVICE ENVIRONMENT STATISTICS

Summary	
Time In Service	22 Days 8 Hrs 53 Mins 6 Secs
Time Since Last Power cycle	0 Days 1 Hrs 46 Mins 26 Secs
Minimum Ambient Temperature	25.71°C
Maximum Ambient Temperature	42.61°C
Average Ambient Temperature	37.82°C

Summary	
Minimum Humidity	13.14%
Maximum Humidity	30.45%
Average Humidity	13.14%

Ambient Temperature

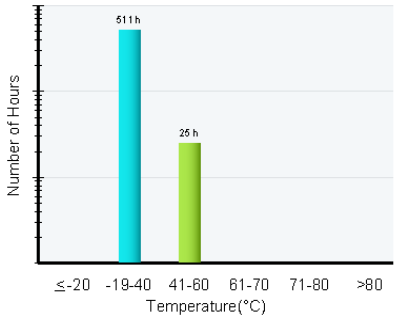

Ambient / Humidity Combination

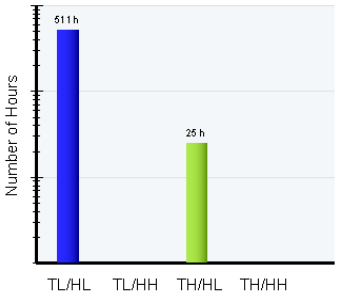

TL: Temp < 40°C
TH: Temp > 40°C
HL: Humidity < 55%
HH: Humidity > 55%

Humidity

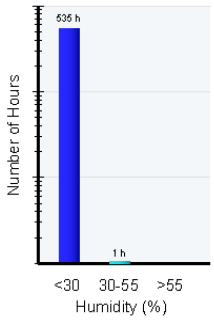

Surge Detection

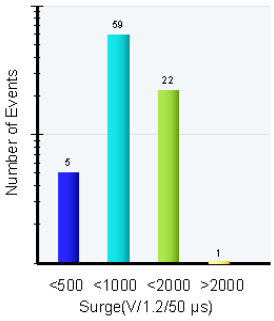

8 Series EnerVista SETUP

Version 1.40

Figure 320: Environmental Report

17.3 GENERAL MAINTENANCE

The relay requires minimal maintenance. As a microprocessor-based relay, its characteristics do not change over time. The expected service life is 20 years when the environment and electrical conditions are within stated specifications.

The relay performs continual self-tests, however we recommend scheduling regular maintenance activities. This maintenance can involve in-service, out-of-service, or unscheduled maintenance.

17.3.1 IN-SERVICE MAINTENANCE

In-service maintenance consists of the following activities:

1. Visual verification of the analog values integrity, such as voltage and current (in comparison to other devices on the corresponding system).
2. Visual verification of active alarms, relay display messages, and LED indications.
3. Visual inspection for any damage, corrosion, dust, or loose wires.
4. Event recorder file download with further events analysis.

17.3.2 OUT-OF-SERVICE MAINTENANCE

Out-of-service maintenance consists of the following activities:

1. Check wiring connections for firmness.
2. Analog values (currents, voltages, RTDs, analog inputs) injection test and metering accuracy verification. Calibrated test equipment is required.
3. Protection elements setting verification (analog values injection or visual verification of setting file entries against relay settings schedule).
4. Contact inputs and outputs verification. This test can be conducted by direct change of state forcing or as part of the system functional testing.
5. Visual inspection for any damage, corrosion, or dust.
6. Event recorder file download with further events analysis.

17.3.3 UNSCHEDULED MAINTENANCE (SYSTEM INTERRUPTION)

Unscheduled maintenance consists of the following activities:

- Viewing the event recorder and oscillography for correct operation of inputs, outputs, and elements.

CHAPTER 18

SPECIFICATIONS

18.1 DEVICE

18.1.1 ANNUNCIATOR PANEL

ANNUNCIATOR PANEL	
Number of Elements:	1 (36 indicators)
Layout:	Grid of 2x2 or 3x3
Data Storage:	Non-volatile memory
Mode:	Self-reset, latched, acknowledgeable
Display Text:	3 lines of 15 characters maximum
Visual Indication:	Flashing: 2Hz @ 50% duty cycle

18.1.2 CUSTOM CONFIGURATIONS

CUSTOM CONFIGURATIONS	
Config Mode:	Simplified, Regular

18.2 PROTECTION ELEMENTS

To obtain the total operating time, i.e. from the presence of a trip condition to initiation of a trip, add 8 ms output relay time to the operate times listed below.

18.2.1 BROKEN CONDUCTOR

BROKEN CONDUCTOR	
Minimum Operating Positive Current:	0.05 to 1.00 x CT in steps of 0.01 x CT
Maximum Operating Positive Current:	0.05 to 5.00 x CT in steps of 0.01 x CT
Pickup Level:	20.0% to 100.0% in steps of 0.1%
Dropout Level:	97% to 98% of the Pickup Level
Pickup Time Delay:	0.000 to 6000.000 s in steps of 0.001 s
Timer Accuracy:	±3% of delay setting or ±¾ cycle (whichever is greater) from pickup to operate
Operate time	< 2.5 cycles

18.2.2 LOAD ENCROACHMENT

LOAD ENCROACHMENT	
Operating Parameter:	Positive sequence impedance (V1/I1)
Reach (in secondary Ω):	0.02 to 250.00 Ω in steps of 0.01 Ω
Angle:	5° to 85° in steps of 1°
Minimum Voltage:	0.00 to 1.50 x VT in steps of 0.01 x VT
Impedance Accuracy:	±5%
Angle Accuracy:	±2°
Pickup Time Delay:	0.000 to 6000.000 s in steps of 0.001 s
Dropout Time Delay:	0.000 to 6000.000 s in steps of 0.001 s
Operate Time:	<20 ms at 1.1 x pickup at 60 Hz <24 ms at 1.1 x pickup at 50 Hz
Timing Accuracy:	±3% of delay setting or ±¼ cycle (whichever is greater) from pickup to operate

18.2.3 THERMAL OVERLOAD (49)

THERMAL OVERLOAD (49)	
Operating Parameter:	RMS current
Pickup Level:	0.050 to 30.000 x CT in steps of 0.001 x CT
Alarm Level:	50.0 to 110.0% in steps 0.1%
Heat Time Constant (τ_{H1} and τ_{H2}):	1.0 to 600.0 min in steps of 0.1 min
Cool Time Constant (τ_{C1} and τ_{C1}):	1.00 to 6.00 x $\tau_{H1(2)}$ in steps of 0.01 x $\tau_{H1(2)}$
k factor	1.00 to 1.50 in steps of 0.01
Current Level Accuracy (For 0.1 to 2.0 x CT):	±0.5% of reading or ±0.4% of rated (whichever is greater).
Current Level Accuracy (For > 2.0 x CT):	±1.5% of reading
Operate Time:	< 45 ms at 60 Hz (from 0 to 120 x pickup) < 50 ms at 50 Hz (from 0 to 120 x pickup)
Thermal alarm pickup	calculated time ± 10%

THERMAL OVERLOAD (49)	
Thermal overload pickup	calculated time ± 10%
Cooling time accuracy	± 15 % theoretical
Repeatability	<5%

18.2.4 SWITCH ON TO FAULT (SOTF)

SOTF (SWITCH ON TO FAULT)	
Number of Elements:	6 (3 per Breaker)
Pickup Threshold:	0.050 to 10.000 pu of CT in steps of 0.001
Pickup Level Accuracy:	0.1 to 2.0 x CT rating: ±0.5% of reading or ±1% of rated (whichever is greater)> 2.0 x CT rating: ±1.5% of reading
Pickup Level:	0.05 to 1.00 x VT in steps of 0.01
Level Accuracy:	±0.5% of reading from 10 to 240 V
Pickup Delay:	0.000 to 600.000 s in steps of 0.01
Time Accuracy:	±3% or ±35 ms, whichever is greater
Operate Time:	<10 ms @ 60Hz

18.2.5 RESTRICTED GROUND FAULT (87G)

RESTRICTED GROUND (EARTH) FAULT (87G)	
Operating Parameter:	Ia, Ib, Ic and Ig (Fundamental Phasor Magnitude)
Pickup Level:	0.050 to 30.000 x CT in steps of 0.001 x CT (phase CT)
Ground Supervision Level:	0.050 to 30.000 x CT in steps of 0.001 x CT (ground CT)
Dropout Level:	97 to 98% of Pickup
Slope Range:	0 to 100% in steps of 1%
Pickup Delay:	0.000 to 6000.000 s in steps of 0.001 s
Level Accuracy:	For 0.1 to 2.0 x CT: ±0.5% of reading or ±0.4% of rated, whichever is greater. For > 2.0 x CT: ±1.5% of reading
Operate Time:	<25 ms at 1.1 x slope x Imax at 60 Hz, typically <30 ms at 1.1 x slope x Imax at 50 Hz, typically
Timing Accuracy:	±3% of delay setting or ±¼ cycle (whichever is greater) from pickup to operate

18.2.6 NEUTRAL ADMITTANCE (21YN)

NEUTRAL ADMITTANCE (21YN)	
Operating Characteristic (Modes):	Admittance, Conductance and Susceptance
Directionality:	Non-directional, Forward and Reverse
Reach Admittance (secondary Siemens):	0.00 to 500.00 mS in steps of 0.01
Reach Conductance\Susceptance (secondary Siemens):	-500.00 to 500.00 mS in steps of 0.01
Level Accuracy:	±1% of Pickup or ±0.01 mS, whichever is greater
Pickup Delay:	0.000 to 600.000 s in steps of 0.001
Dropout Level:	0.000 to 600.000 s in steps of 0.001
Time Accuracy:	±3% of delay setting time or ±20 ms, whichever is greater
Operate Time:	Up to max 4 cycles

NEUTRAL ADMITTANCE (21YN)	
Minimum Current Supervision	
Pickup:	0.02 to 1.00 x CT in steps of 0.01
Dropout:	103% of pickup
Minimum Voltage Supervision	
Pickup:	0.01 to 1.50 x VT in steps of 0.01
Dropout:	103% of pickup

18.2.7 PHASE INSTANTANEOUS OVERCURRENT (50P)

PHASE INSTANTANEOUS OVERCURRENT (50P)	
Operating Parameter	Ia, Ib, Ic (Fundamental Phasor Magnitude or RMS)
Pickup Level:	0.010 to 30.000 x CT in steps of 0.001 x CT
Dropout Level:	97 to 98% of Pickup
Level Accuracy:	For 0.1 to 2.0 x CT: ±0.5% of reading or ±0.4% of rated, whichever is greater, for > 2.0 x CT: ±1.5% of reading. (For Neutral IOC, Iop = 3 * (|I_0| - K * |I_1|)where K = 1/16 and |I_0| = 1/3 * |In|))
Operate Time:	<12 ms typical at 3 × Pickup at 60 Hz <15 ms typical at 3 × Pickup at 50 Hz (Phase/Ground IOC)
Timer Accuracy	±3% of delay setting or ±¼ cycle (whichever is greater) from pickup to operate

18.2.8 NEUTRAL INSTANTANEOUS OVERCURRENT (50N)

NEUTRAL INSTANTANEOUS OVERCURRENT (50N)	
Operating Parameter	Fundamental Phasor Magnitude
Pickup Level:	0.010 to 30.000 x CT in steps of 0.001 x CT
Dropout Level:	97 to 98% of Pickup
Level Accuracy:	For 0.1 to 2.0 x CT: ±0.5% of reading or ±0.4% of rated, whichever is greater, for > 2.0 x CT: ±1.5% of reading. (For Neutral IOC, Iop = 3 * (|I_0| - K * |I_1|)where K = 1/16 and |I_0| = 1/3 * |In|))
Operate Time:	<16 ms typical at 3 × Pickup at 60 Hz (Neutral IOC) <20 ms typical at 3 × Pickup at 50 Hz
Timer Accuracy	±3% of delay setting or ±¼ cycle (whichever is greater) from pickup to operate

18.2.9 GROUND INSTANTANEOUS OVERCURRENT (50G)

GROUND INSTANTANEOUS OVERCURRENT (50G)	
Operating Parameter	Ig Fundamental Phasor Magnitude
Pickup Level:	0.010 to 30.000 x CT in steps of 0.001 x CT
Dropout Level:	97 to 98% of Pickup
Level Accuracy (for 0.1 to 2.0 x CT):	±0.5% of reading or ±0.4% of rated, whichever is greater
Level Accuracy (for > 2.0 x CT):	±1.5% of reading.
Operate Time:	<12 ms typical at 3 × Pickup at 60 Hz
Timer Accuracy from pickup to operate	±3% of delay setting or ±¼ cycle (whichever is greater)

18.2.10 PHASE TIME OVERCURRENT (51P/V)

PHASE TIME OVERCURRENT (51P/V)	
Current:	Phasor or RMS
Pickup Level:	0.010 to 30.000 in steps of 0.001 x CT
Dropout Level:	97 to 98% of Pickup
Level Accuracy:	For 0.1 to 2.0 x CT: ±0.5% of reading or ±0.4% of rated, whichever is greater. For > 2.0 x CT: ±1.5% of reading 50:0.025A CT: For 0.5A to 4A: ±0.1A; For > 4A: ±0.2A (889 only)
Curve Shape:	Definite Time, IEC Curve A, IEC Curve B, IEC Curve C, IEC Short Inverse, Long Time Inverse, Rectifier, SI(1.3s), BPN EDF, IEEE Mod Inverse, IEEE Very Inverse, IEEE Extr. Inverse, US Inverse, US ST Inverse, ANSI Extr. Inverse, ANSI Very Inverse, ANSI Norm Inverse, ANSI Mod Inverse, IAC Extr. Inverse, IAC Very Inverse, IAC Inverse, IAC Short Inverse, I^2t, I^4t, Rapid Inverse, FlexCurve A, FlexCurve B, FlexCurve C, FlexCurve D
Curve Multiplier TDM: TMS: K (RI): Time Delay: Reset Char: Reset Time:	 0.01 to 28800.00 in steps of 0.01 0.025 – 1.200 in steps of 0.005 0.10 – 10.00 in steps of 0.01 0.01 to 28800.00 in steps of 0.01 DT, Inverse 0.000 to 28800.000s in steps of 0.001 s
Reset Time:	Instantaneous, Timed
Curve Timing Accuracy:	Currents > 1.03 to 20 x pickup: ±3% of operate time or ±½ cycle (whichever is greater) from pickup to operate
Voltage Dependent OC (51V):	VCO (Voltage Controlled Overcurrent), VRO (Voltage Restraint Overcurrent)

18.2.11 NEUTRAL/GROUND TIME OVERCURRENT (51N/G)

NEUTRAL/GROUND TIME OVERCURRENT (51N/G)	
Operating Parameter:	In/Ig (RMS or Fundamental)
Pickup Level:	0.010 to 30.000 in steps of 0.001 x CT
Dropout Level:	97 to 98% of Pickup
Level Accuracy for 0.1 to 2.0 x CT	±0.5% of reading or ±0.4% of rated, whichever is greater
Level Accuracy for > 2.0 x CT:	±1.5% of reading
Curve Shape:	Definite Time, IEC Curve A, IEC Curve B, IEC Curve C, IEC Short Inverse, Long Time Inverse, Rectifier, SI(1.3s), BPN EDF, IEEE Mod Inverse, IEEE Very Inverse, IEEE Extr. Inverse, US Inverse, US ST Inverse, ANSI Extr. Inverse, ANSI Very Inverse, ANSI Norm Inverse, ANSI Mod Inverse, IAC Extr. Inverse, IAC Very Inverse, IAC Inverse, IAC Short Inverse, I^2t, I^4t, Rapid Inverse, IDG, EPATR B, FlexCurve A, FlexCurve B, FlexCurve C, FlexCurve D
Time Delay:	0.000 – 200.000 in steps 0.001

NEUTRAL/GROUND TIME OVERCURRENT (51N/G)	
Curve Multiplier TDM: TMS: K (RI): IDG Is: IDG Time: Reset Char: Reset Time:	 0.01 to 600.00 in steps of 0.01 0.025 – 1.200 in steps of 0.005 0.10 – 10.00 in steps of 0.01 1.0 -4.0 in steps of 0.1 1.00-2.00 in steps of 0.01 DT, Inverse 0.000 – 100.000 in steps of 0.001 s
Curve Timing Accuracy:	Currents > 1.03 to 20 x pickup: ±3% of operate time or ±½ cycle (whichever is greater) from pickup to operate

18.2.12 PHASE DIRECTIONAL OVERCURRENT (67P)

PHASE DIRECTIONAL OVERCURRENT (67P)	
Relay Connection:	90°(Quadrature)
Quadrature Voltage:	ABC phase seq.: phase A (Vbc), phase B (Vca), phase C (Vab) ACB phase seq.: phase A (Vcb), phase B (Vac), phase C (Vba)
Polarizing Voltage Threshold (up to FW 3.xx):	0.050 to 3.000 x VT in steps of 0.001 x VT
Polarizing Voltage Threshold (from FW 4.10):	0.015 to 3.000 x VT in steps of 0.001 x VT
Current Sensitivity Threshold:	0.05 x CT
Characteristic Angle:	0° to 359° in steps of 1°
Angle Accuracy:	±3°
Operation Time (FlexLogic™ operands):	Reverse to Forward transition: < 12 ms, typically. Forward to Reverse transition: <8 ms, typically.

18.2.13 NEUTRAL DIRECTIONAL OVERCURRENT (67N)

NEUTRAL DIRECTIONAL OVERCURRENT (67N)	
Directionality:	Co-existing forward and reverse
Polarizing:	Voltage, Current, Dual
Polarizing Current:	Ig
Operating Current:	I0
Level Sensing:	3 x (|I0| – K x |I1|), Ig
Restraint, K:	0.000 to 0.500 in steps of 0.001
Characteristic Angle:	-90° to 90° in steps of 1°
Limit Angle:	40° to 90° in steps of 1°, independent for forward and reverse
Angle Accuracy:	±3° (both voltage and current (1A/5A only) polarizing signals)
Pickup Level:	0.050 to 30.000 x CT in steps of 0.001 x CT
Dropout Level:	97 to 98% of Pickup
Operate Time (no direction transition):	< 16 ms at 3 x Pickup at 60 Hz < 20 ms at 3 x Pickup at 50 Hz

18.2.14 GROUND DIRECTIONAL OVERCURRENT (67G)

GROUND DIRECTIONAL OVERCURRENT (67G)	
Directionality:	Co-existing forward and reverse
Polarizing (845):	Voltage

GROUND DIRECTIONAL OVERCURRENT (67G)	
Polarizing (850, 889):	Voltage, Current, Dual
Polarizing Voltage:	V_0 or VX
Polarizing Current:	Ipol
Operating Current:	Ig
Level Sensing:	Ig, Ipol
Characteristic Angle:	-90° to 90° in steps of 1°
Limit Angle:	40° to 90° in steps of 1°, independent for forward and reverse
Angle Accuracy:	±3°
Pickup Level (up to FW 3.xx)	0.050 to 30.000 x CT in steps of 0.001
Pickup Level (from FW 4.10)	0.010 to 30.000 x CT in steps of 0.001
Dropout Level:	97 to 98%
Operate Time (no direction transition):	< 12 ms typical at 3 x Pickup at 60 Hz < 15 ms typical at 3 x Pickup at 50 Hz

18.2.15 NEGATIVE SEQUENCE TIME OVERCURRENT

NEGATIVE SEQUENCE TIME OVERCURRENT (51_2)	
Operating Parameter:	I_2 (Fundamental Phasor Magnitude)
Pickup Level:	0.020 to 30.000 x CT in steps of 0.001 x CT
Dropout Level:	97 to 98% of Pickup
Level Accuracy:	For 0.1 to 2.0 x CT: ±0.5% of reading or ±0.4% of rated, whichever is greater, for > 2.0 x CT: ±1.5% of reading
Curve Shape (from FW 4.10):	Definite Time, IEC Curve A, IEC Curve B, IEC Curve C, IEC Short Inverse, Long Time Inverse, Rectifier, SI(1.3s), BPN EDF, IEEE Mod Inverse, IEEE Very Inverse, IEEE Extr. Inverse, US Inverse, US ST Inverse, ANSI Extr. Inverse, ANSI Very Inverse, ANSI Norm Inverse, ANSI Mod Inverse, IAC Extr. Inverse, IAC Very Inverse, IAC Inverse, IAC Short Inverse, I^2t, I^4t, Rapid Inverse, FlexCurve A, FlexCurve B, FlexCurve C, FlexCurve D
Time Delay:	0.000 – 200.000 in steps 0.001
Curve Multiplier TDM: TMS: K (RI): Reset Char: Reset Time:	 0.01 – 600.00 in steps of 0.01 0.025 – 1.200 in steps of 0.005 0.10 – 10.00 in steps of 0.01 DT, Inverse 0.000 – 600.000 s in steps of 0.001 DT, Inverse
Curve Timing Accuracy:	Currents > 1.03 to 20 x pickup: ±3% of curve delay or ±½ cycle (whichever is greater) from pickup to operate

18.2.16 NEGATIVE SEQUENCE DIRECTIONAL OVERCURRENT

NEGATIVE SEQUENCE DIRECTIONAL OVERCURRENT (67_2)	
Directionality:	Co-existing forward and reverse
Polarizing:	Voltage
Polarizing Voltage:	V_2
Operating Current:	I_2
Level Sensing:	Negative-sequence: |I_2| – K x |I_1|

NEGATIVE SEQUENCE DIRECTIONAL OVERCURRENT (67_2)	
Restraint, K:	0.000 to 0.500 in steps of 0.001
Characteristic Angle:	-95° to 95° in steps of 1°
Limit Angle:	40° to 90° in steps of 1°, independent for forward and reverse
Angle Accuracy:	±3°
Pickup Level:	0.020 to 30.000 x CT in steps of 0.001 x CT
Dropout Level:	97 to 98% of Pickup
Operate Time:	< 12 ms typical at 3 x Pickup at 60 Hz < 15 ms typical at 3 x Pickup at 50 Hz

18.2.17 NEGATIVE SEQUENCE INSTANTANEOUS OVERCURRENT

NEGATIVE SEQUENCE INSTANTANEOUS OVERCURRENT (50_2)	
Current:	I_2 Fundamental Phasor Magnitude
Pickup Level:	0.0020 to 30.000 x CT in steps of 0.001 x CT
Dropout Level:	97 to 98% of Pickup
Level Accuracy for 0.1 to 2.0 x CT:	±0.5% of reading or ±0.4% of rated, whichever is greater,
Level Accuracy for > 2.0 x CT:	±1.5% of reading. (For Iop = |I_2| - K * |I_1|, where K = 1/8
Pickup Time Delay:	0.000 to 6000.000 s in steps of 0.001 s
Dropout Time Delay:	0.000 to 6000.000 s in steps of 0.001 s
Overreach:	< 2%
Operate Time:	< 12 ms typical at 3 x Pickup at 60 Hz < 15 ms typical at 3 x Pickup at 50 Hz
Timer Accuracy:	±3% of delay setting or ±½ cycle (whichever is greater) from pickup to operate

18.2.18 SENSITIVE GROUND INSTANTANEOUS OVERCURRENT (50SG)

SENSITIVE GROUND INSTANTANEOUS OVERCURRENT (50SG)	
Operating Parameter:	Isg (Fundamental Phasor Magnitude)
Pickup Level:	0.002 to 3.000 x CT in steps of 0.001 x CT
Dropout Level:	97 to 98% of Pickup
Level Accuracy:	±1.5% of setting or ±0.6% of rated (whichever is greater)
Operate Time:	< 12 ms at 3 × Pickup at 60 Hz
Timer Accuracy:	±3% of operate time or ±¼ cycle (whichever is greater)
SENSITIVE GROUND TIME OVERCURRENT (51SG)	
Operating Parameter:	Isg (RMS or Fundamental)
Pickup Level:	0.005 to 3.000 x CT in steps of 0.001 x CT
Pickup Level for 50:0.025 (850 only)	0.50 to 15.00 A in steps of 0.01 A
Dropout Level:	97 to 98% of Pickup
Level Accuracy:	±1.5% of setting or ±0.6% of rated (whichever is greater)
Level Accuracy for 50:0.025 (850 only)	±0.1A for 0.5A to 4A; ±0.2A for > 4A
Dropout Level:	97 to 98% of Pickup

SENSITIVE GROUND TIME OVERCURRENT (51SG)	
Curve Shape:	Definite Time, IEC Curve A, IEC Curve B, IEC Curve C, IEC Short Inverse, Long Time Inverse, Rectifier, SI(1.3s), BPN EDF, IEEE Mod Inverse, IEEE Very Inverse, IEEE Extr. Inverse, US Inverse, US ST Inverse, ANSI Extr. Inverse, ANSI Very Inverse, ANSI Norm Inverse, ANSI Mod Inverse, IAC Extr. Inverse, IAC Very Inverse, IAC Inverse, IAC Short Inverse, I2t, I4t, Rapid Inverse, IDG, EPATR B, FlexCurve A, FlexCurve B, FlexCurve C, FlexCurve D
Curve Multiplier:	0.05 to 600.00 in steps of 0.01
Reset Time:	Instantaneous, Timed
Curve Timing Accuracy:	Currents > 1.03 to 20 x pickup: ±%3 of operate time or ±½ cycle (whichever is greater) from pickup to operate
Delay:	0.000 – 200.000 in steps 0.001
TDM	0.01 – 600.00 in steps of 0.01
TMS:	0.025 – 1.200 in steps of 0.005
K (RI)	0.10 – 10.00 in steps of 0.01
Time Dial:	0.01 – 600.00 in steps of 0.01
IDG Is:	1.0 - 4.0 in steps of 0.1
IDG Time	1.00 - 2.00 in steps of 0.01
Reset Char:	DT, Inverse
tRESET:	0.000 – 100.000 in steps of 0.001 s

18.2.19 SENSITIVE GROUND DIRECTIONAL OVERCURRENT (67SG)

SENSITIVE GROUND DIRECTIONAL OVERCURRENT (67SG)	
Directionality:	Co-existing forward and reverse
Polarizing:	Voltage, Current, Dual
Polarizing Voltage:	V_0 or VX
Polarizing Current:	Ig
Operating Current:	Isg
Level Sensing:	Ig, Isg
Characteristic Angle:	-90° to 90° in steps of 1°
Limit Angle:	40° to 90° in steps of 1°, independent for forward and reverse
Angle Accuracy:	±3°
Pickup Level:	0.00100 to 3.00000 x CT in steps of 0.001 x CT
Dropout Level:	97 to 98%
Operate Time (no direction transition):	< 12 ms typical at 3 × Pickup at 60 Hz < 15 ms typical at 3 × Pickup at 50 Hz

18.2.20 UNDERCURRENT (37)

UNDERCURRENT (37)	
Operating Parameter:	Per-phase current Ia, Ib, Ic (Phasor)
Trip/Alarm Pickup Level:	0.05 to 0.95 x CT in steps of 0.01 x CT
Dropout Level:	102 to 103% of Pickup

UNDERCURRENT (37)	
Trip/Alarm Time Delay:	0.00 to 180.00 s in steps of 0.01 s
Pickup Accuracy:	For 0.05 to 2.0 x CT: ±0.5% of reading or ±0.4% of rated, whichever is greater
Operate Time:	<45 ms at 60 Hz, <50 ms at 50 Hz
Timer Accuracy:	±3% of delay setting or ±2 power cycles (whichever is greater) from pickup to operate
Stages:	Trip and Alarm
No. of Elements	3

18.2.21 PHASE OVERVOLTAGE (59P)

PHASE OVERVOLTAGE (59P)	
Voltage:	Fundamental Phasor Magnitude
Pickup Level:	0.02 to 3.00 x VT in steps of 0.01 x VT
Dropout Level (up to 3.xx):	97 to 98% of Pickup
Dropout Level (from 4.10):	Configurable: Either 97 to 98% of pickup or 95 to 97% of pickup
Level Accuracy:	±0.5% of reading from 10 to 208 V
Phases Required for Operation:	Any one, Any two, All three
Pickup Time Delay:	0.000 to 6000.000 s in steps of 0.001s (Definite Time)
Dropout Time Delay:	0.000 to 6000.000 s in steps of 0.001s (Definite Time)
Pickup Accuracy:	Per phase voltage input channel error
Operate Time:	< 30 ms at 1.1 x pickup at 60Hz < 35 ms at 1.1 x pickup at 50Hz
Timer Accuracy:	±3% of delay setting or ±¼ cycle (whichever is greater) from pickup to operate

18.2.22 NEUTRAL OVERVOLTAGE (59N)

NEUTRAL OVERVOLTAGE (59N)	
Operating Parameter:	3V_0 calculated from phase to ground voltages
Pickup Level:	0.02 to 3.00 x VT in steps of 0.01 x VT
Dropout Level:	Configurable: Either 97 to 98% of Pickup, or 95 to 98% of Pickup.
Level Accuracy:	±0.5% of reading from 10 to 208 V
Neutral Overvoltage Curves:	Definite time, FlexCurve A/B/C/D, Inverse time (from FW 4.10)
Pickup Time Delay:	0.000 to 6000.000 s in steps of 0.001 s (Definite Time)
Dropout Time Delay:	0.000 to 6000.000 s in steps of 0.001 s (Definite Time)
Operate Time:	< 30 ms at 1.1 x pickup at 60Hz < 35 ms at 1.1 x pickup at 50Hz
Curve Timing Accuracy:	at > 1.1 x Pickup: ±3% of curve delay or ±1 cycle (whichever is greater) from pickup to operate

18.2.23 AUXILIARY OVERVOLTAGE (59X)

AUXILIARY OVERVOLTAGE (59X)	
Operating Parameter:	Vx (Phasor)
Pickup Level:	0.00 to 3.00 x VT in steps of 0.01 x VT
Dropout Level (up to 3.xx):	97 to 98% of Pickup
Dropout Level (from 4.10):	Configurable: Either 97 to 98% of pickup or 95 to 97% of pickup
Level Accuracy:	±0.5% of reading from 10 to 240 V
Overvoltage Curves:	Definite Time, Inverse Time, FlexCurves A/B/C/D
Pickup Time Delay:	0.000 to 6000.000 s in steps of 0.001s
Dropout Time Delay:	0.000 to 6000.000 s in steps of 0.001s
Pickup Accuracy:	Auxiliary voltage input channel error
Operate Time:	< 30 ms at 1.1 x pickup at 60Hz
Curve Timing Accuracy:	at >1.1 x PKP: 3.5% of operate time ±½ cycle (whichever is greater) from pickup to operate
Timer Accuracy:	±3% of operate time or ±½ cycle (whichever is greater)

18.2.24 NEGATIVE SEQUENCE OVERVOLTAGE (59_2)

NEGATIVE SEQUENCE OVERVOLTAGE (59_2)	
Operating Parameter:	V_2
Pickup Level:	0.00 to 3.00 x VT in steps of 0.01 x VT
Dropout Level (up to 3.xx):	97 to 98% of Pickup
Dropout Level (from 4.10):	Configurable: Either 97 to 98% of pickup or 95 to 97% of pickup
Level Accuracy:	±0.5% of reading from 10 to 208 V
Pickup Time Delay:	0.000 to 6000.000 s in steps of 0.001 s
Dropout Time Delay:	0.000 to 6000.000 s in steps of 0.001 s
Operate Time:	< 25 ms at 1.1 x pickup at 60 Hz < 30 ms at 1.1 x pickup at 50 Hz
Timer Accuracy:	±3% of delay setting or ±¼ cycle (whichever is greater) from pickup to operate

18.2.25 PHASE UNDERVOLTAGE (27P)

PHASE UNDERVOLTAGE (27P)	
Voltage:	Fundamental Phasor Magnitude
Minimum Voltage:	0.00 to 1.50 x VT in steps of 0.01 x VT
Pickup Level:	0.00 to 1.50 x VT in steps of 0.01 x VT
Dropout Level:	Selectable. Either 101 to 103% of pickup or 103 to 105% of pickup
Level Accuracy:	±0.5% of reading from 10 to 208 V
Phases Required for Operation:	Any one, Any two, All three
Undervoltage Curves:	Definite Time, Inverse Time, FlexCurves A/B/C/D
Pickup Time Delay:	0.020 to 6000.000 s in steps of 0.001s
Pickup Accuracy:	Per phase voltage input channel error
Reset Time Delay:	0.000 – 6000.00 s in steps of 0.001s
Reset Mode:	Definite Time, Dependent Time

PHASE UNDERVOLTAGE (27P)	
Operate Time:	< 20 ms at 0.90 x pickup at 60 Hz < 25 ms at 0.90 x pickup at 50 Hz
Curve Timing Accuracy:	At < 0.90 x pickup: ±3.5% of curve delay or ±½ cycle (whichever is greater) from pickup to operate

18.2.26 AUXILIARY UNDERVOLTAGE (27X)

AUXILIARY UNDERVOLTAGE (27X)	
Operating Parameter:	Vx (Phasor)
Minimum Voltage:	0.00 to 1.50 x VT in steps of 0.01 x VT
Pickup Level:	0.00 to 1.50 x VT in steps of 0.01 x VT
Dropout Level:	102 to 103% of Pickup
Level Accuracy:	±0.5% of reading from 10 to 208 V
Undervoltage Curves:	Definite Time, GE IAV Inverse Time or FlexCurves A/B/C/D
Pickup Time Delay:	0.000 to 6000.000 s in steps of 0.001 s
Operate Time:	< 20 ms at 0.90 x pickup at 60 Hz < 25 ms at 0.90 x pickup at 50 Hz
Curve Timing Accuracy:	At < 0.90 x pickup: ±3.5% of curve delay or ±½ cycle (whichever is greater) from pickup to operate

18.2.27 TIMED UNDERVOLTAGE (27T)

TIMED UNDERVOLTAGE - TIMED UV (27T)	
Operating Parameter:	[VA, VB, VC] or [VA, VB, VC] (Phasor)
Minimum Voltage:	0.00 to 1.50 (VT) in steps of 0.01 VT
Pickup Level:	0.00 to 1.50 (VT) in steps of 0.01 VT
Dropout Level:	102.0% to 150.0% of PKP in steps of 0.1% PKP
Level Accuracy:	±0.5% of reading from 10 to 240 V
Phases required for operation:	Any one, Any two, All three
Curve Limit:	0.00 to 1.50 (VT) in steps of 0.01 VT
Curve Time:	0.000 – 600000.000 s in steps of 0.001s
Dropout Time Delay:	0.000 – 600000.000 s in steps of 0.001s
Pickup Accuracy:	Per phase voltage input channel error
Dropout Accuracy:	Per phase voltage input channel error
Curve Timing Accuracy:	at < 0.90 x pickup: ±3.5% of operate time or ±½ cycle (whichever is greater) from pickup to operate

18.2.28 VOLTAGE INTERRUPTION

NEUTRAL OVERVOLTAGE (59N)	
Operating Parameter:	V1
Minimum Voltage	0.00 to 1.50 x VT in steps of 0.01 VT
Pickup Level:	0.02 to 3.00 x VT in steps of 0.01 VT
Dropout Level:	101 to 104% of Pickup

18.2.29 OVERFREQUENCY (81O)

OVERFREQUENCY (81O)	
Pickup Level Normal Frequency:	20.00 to 65.00 Hz in steps of 0.01
Pickup Level High Frequency:	40.00 to 65.00 Hz in steps of 0.01
Dropout Level:	Pickup -0.03 Hz
Pickup Time Delay:	0.000 to 6000.000 s in steps of 0.001 s
Dropout Time Delay:	0.000 to 6000.000 s in steps of 0.001 s
Minimum Operating Voltage:	0.000 to 1.250 x VT in steps of 0.001 x VT
Level Accuracy Normal Frequency (40 to 70 Hz)	±0.01 Hz
Level Accuracy High Frequency (40 to 70 Hz)	±0.02 Hz
Timer accuracy	
Operate Time:	Typically 7.5 cycles at 0.1 Hz/s change. Typically 7 cycles at 0.3 Hz/s change. Typically 6.5 cycles at 0.5 Hz/s change.

Note:
Typical times are average Operate Times including variables such as frequency change instance, test method, etc., and may vary by ±0.5 cycles.

18.2.30 UNDERFREQUENCY (81U)

UNDERFREQUENCY (81U)	
Pickup Level:	20.00 to 65.00 Hz in steps of 0.01
High-speed Frequency Input	40.00 to 65.00 Hz in steps of 0.01
Dropout Level:	Pickup +0.03 Hz
Pickup Time Delay:	0.000 to 6000.000 s in steps of 0.001s
Dropout Time Delay:	0.000 to 6000.000 s in steps of 0.001s
Minimum Operating Voltage:	0.000 to 1.250 x VT in steps of 0.001 x VT
Minimum Operating Current:	0.000 to 30.000 x CT in steps of 0.001 x CT
Level Accuracy (Normal Frequency Input):	±0.01 Hz
Level Accuracy (High-speed Frequency Input):	±0.02 Hz
Timer Accuracy:	±3% of delay setting or ±¼ cycle (whichever is greater) from pickup to operate
Operate Time:	Typically 7.5 cycles at 0.1 Hz/s change. Typically 7 cycles at 0.3 Hz/s change. Typically 6.5 cycles at 0.5 Hz/s change.

Note:
Typical times are average Operate Times including variables such as frequency change instance, test method, etc., and may vary by ±0.5 cycles.

18.2.31 FAST UNDERFREQUENCY

FAST UNDERFREQUENCY	
Operating Parameter:	Frequency and rate of change of frequency
UF Pickup Level:	20.00 to 65.00 Hz in steps of 0.01 Hz

FAST UNDERFREQUENCY	
df/dt Pickup Level:	-10.00 to -0.10 Hz/s in steps of 0.01 Hz/s
Pickup Time Delay:	0.000 to 6000.000 s in steps of 0.001 s
Dropout Time Delay:	0.000 to 6000.000 s in steps of 0.001 s
Frequency Accuracy:	250 mHz/s or 3.5%, whichever is greater
Timer Accuracy:	±3% of operate time or ±¼ cycle (whichever is greater)

18.2.32 RATE OF CHANGE OF FREQUENCY (81R)

FREQUENCY RATE OF CHANGE (81R)	
df/dt Trend:	Increasing, Decreasing, Bi-directional
df/dt Pickup Level:	0.10 to 15.00 Hz/s in steps of 0.01 Hz/s
df/dt Dropout Level:	96% of Pickup Level
df/dt Level Accuracy:	80 mHz/s or 3.5%, whichever is greater
Frequency (normal):	20.00 to 80.00 Hz in steps of 0.01 Hz
Frequency (high-speed):	40.00 to 70.00 Hz in steps of 0.01 Hz
Minimum Voltage Threshold:	0.000 to 1.250 x VT in steps of 0.001 x VT
Minimum Current Threshold:	0.000 to 30.000 x CT in steps of 0.001 x CT
Pickup Time Delay:	0.000 to 6000.000 s in steps of 0.001 s
Timer Accuracy:	±3% of delay setting or ±¼ cycle (whichever is greater) from pickup to operate
95% Settling Time for df/dt:	< 24 cycles
Typical Operate Time:	6.5 cycles at 2 × Pickup 5.5 cycles at 3 × Pickup 4.5 cycles at 5 × Pickup

18.2.33 DIRECTIONAL POWER

DIRECTIONAL POWER (32)	
Measured Power	3-phase
Number of Stages	2
Characteristic Angle	0° to 359° in steps of 1°
Calibration Angle	0.00° to 0.95° in steps of 0.05°
Power Pickup Range	–1.200 to 1.200 x Rated Power in steps of 0.001
Pickup Level Accuracy	±1% or ±0.001 x Rated Power, whichever is greater
Hysteresis	2% or 0.001 x Rated Power, whichever is greater
Pickup Time Delay	0.000 to 6000.000 s in steps of 0.001 s
Operate Time	< 55 ms at 1.1 x pickup at 60 Hz < 65 ms at 1.1 x pickup at 50 Hz
Timer Accuracy	±3% of delay setting or ±¼ cycle (whichever is greater) from pickup to operate

18.2.34 UNDERVOLTAGE REACTIVE POWER (27Q)

UV REACTIVE POWER (27Q)	
Protection Function	
Voltages:	Phasor only

UV REACTIVE POWER (27Q)	
Pickup Voltage:	0.00 to 1.50 x VT in steps of 0.01
Pickup Vars:	1 to 65000 Kvar in steps of 1 Kvar
Dropout Level:	103% of pickup for Undervoltage 97% of pickup for Over Reactive Power 103% of pickup for Under Reactive Power
Level Accuracy:	±0.5% of reading or ±2V (secondary), whichever is greater
Pickup Time Delay:	0.000 to 600.000 s in steps of 0.001
Timer Accuracy:	±3% of the delay setting time or ±½ cycle (whichever is greater) from pickup to operate
Current Supervision Level:	0.00 to 0.20 x CT in steps of 0.01
Stages:	Trip, Alarm and Configurable
Restoration Function	
Min Voltage:	0.05 to 1.50 x VT in steps of 0.01
Min/Max Frequency:	20.00 to 65.00 Hz in steps of 0.01
Restore Time Delay:	0.00 to 6000.00 s in steps of 0.01
Stages:	Close and Configurable

18.2.35 WATTMETRIC GROUND FAULT (32N)

WATTMETRIC GROUND FAULT (32N)	
Measured Power:	Zero-sequence
Characteristic Angle:	0° to 359° in steps of 1°
Power Pickup Range:	0.001 to 1.200 CT x VT in steps of 0.001
Pickup Level Accuracy:	±1% or ±0.0025 CT x VT, whichever is greater
Hysteresis:	3% or 0.001 CT x VT, whichever is greater
Curve:	Definite Time, Inverse Time, or FlexCurve
Operating Voltage Pickup Level:	0.02 to 3.00 x VT in steps of 0.01 x VT
Operating Current Pickup Level:	0.002 to 30.000 x CT in steps of 0.001 x CT
Power Pickup Delay:	0.000 to 6000.000 s in steps of 0.001 s
Inverse Time Multiplier:	0.01 to 2.00 s in steps of 0.01 s
Operate Time:	< 40 ms at 1.1 x pickup at 60 Hz < 47 ms at 1.1 x pickup at 50 Hz
Curve Timing Accuracy:	±3% of curve delay or ±¾ cycle (whichever is greater) from pickup to operate

18.2.36 RTD PROTECTION

RTD PROTECTION	
Pickup:	1°C to 250°C in steps of 1°C
Hysteresis:	2°C
Timer Accuracy:	<2 s
Elements:	Trip and Alarm

18.2.37 ARC FLASH HS PHASE/GROUND INSTANTANEOUS OVERCURRENT (50P/50G)

ARC FLASH HS PHASE/GROUND INSTANTANEOUS OVERCURRENT HS 50P/50G	
Current:	Phasor Magnitude (special high speed algorithm)
Pickup Level:	0.050 to 30.000 x CT in steps of 0.001 x CT
Dropout Level:	97 to 98% of Pickup
Level Accuracy:	For 0.1 to 0.2 x CT: ±0.2% of reading or 1.5% of rated, whichever is greater For > 0.2 x CT: ±1.5% of reading
Operate Time:	2ms for light-only detection using FlexLogic operands 4 ms at > 6 x Pickup at 60 Hz 5 ms at > 6 x Pickup at 50 Hz 4-6 ms at > (3-6) x Pickup at 60 Hz 4-8 ms at > (3-6) x Pickup at 50 Hz All above operate time accuracy : +/- 1ms (SSR operate time is included)
Seal-in Time	0.00 to 10.00 Seconds

18.3 CONTROL

18.3.1 AUTORECLOSE

AUTORECLOSE (79)	
Number of Breakers:	Single breaker application
Number of Poles:	3-pole tripping/autoreclose schemes
AR Control Mode:	3Ph, 1Ph, 1Ph/3Ph
Reclose attempts:	Up to 4 before lockout
Blocking:	Each reclose shot can block IOC, raise TOC Pickup or change the setting group
Adjustability:	Current supervision can adjust the maximum number of shots attempted
Timer Accuracy:	±3% of delay setting or ±¼ cycle (whichever is greater) for Dead and Reset Timer > 0.4 Sec ±20ms for the Dead and Reset Timer <0.4 Sec
AR CURRENT SUPERVISION AND AR ZONE COORDINATION	
Operating Parameter:	Ia, Ib, Ic, In (Fundamental Phasor Magnitude)
Pickup Level:	0.050 to 30.000 x CT in steps of 0.001 x CT
Dropout Level:	97 to 98% of Pickup
Level Accuracy:	For 0.1 to 2.0 x CT: ±0.5% of reading or ±0.4% of rated, whichever is greater. For > 2.0 x CT: ±1.5% of reading
Timer Accuracy:	±3% of delay setting or ±¼ cycle, (whichever is greater) from pickup to operate

18.3.2 CT SUPERVISION

CT SUPERVISION 1 (CTS)	
Operating Parameter:	Ia, Ib, Ic and Ig (Fundamental Phasor Magnitude) Va, Vb, Vc (Fundamental Phasor Magnitude)
3I0 Pickup Level:	0.050 to 30.000 x CT in steps of 0.001 x CT (phase CT)
IG Pickup Level:	0.050 to 30.000 x CT in steps of 0.001 x CT (ground CT)
3V0 Pickup Level:	0.02 to 3.00 x VT in steps of 0.01 x VT (phase VT)
Dropout Level:	97% to 98% of Pickup
CTS Diff. Pickup Level:	0.050 to 30.000 x CT in steps of 0.001 x CT
Quotient Pickup Level:	0.00 to 1.00 (Imin/Imax)
Slope Range:	0 to 100% in steps of 1%
Pickup Delay:	0.000 to 6000.000 s in steps of 0.001 s
Level Accuracy:	For 0.1 to 2.0 x CT: ±0.5% of reading or ±0.4% of rated (whichever is greater) For > 2.0 x CT: ±1.5% of reading
Operate Time:	< 12 ms typical at 3 x Pickup at 60 Hz < 15 ms typical at 3 x Pickup at 50 Hz
Timer Accuracy:	±3% of delay setting or ±¼ cycle (whichever is greater) from pickup to operate

18.3.3 BREAKER CONTROL

BREAKER CONTROL	
Operation:	Asserted FlexLogic Operands
Function:	Opens/closes, blocks, bypasses blocks to the feeder breaker

18.3.4 POLE DISCORDANCE PROTECTION

POLE DISCORDANCE PROTECTION (52)	
Operating Parameter:	Contact inputs 52a and 52b per phase, Phase currents Ia, Ib, Ic from breaker CTs
Current Limit:	0.000 to 1.000 x CT in steps of 0.001 x CT
Dropout Level:	97 to 98% of Current Limit
Pickup Time Delay:	0.000 to 6000.000 s in steps of 0.001 s
Level Accuracy (Current):	0.1 < I < 2.0 x CT: ±0.5% of reading or ±0.4% of rated (whichever is greater) I > 2.0 x CT: ±1.5% of reading
Timer Accuracy:	±3% of operate time or ±1 cycle (whichever is greater)

18.3.5 LOCAL CONTROL MODE

LOCAL CONTROL MODE	
Number of Elements:	1
Select Before Operate Mode:	Disabled, Enabled
Mode:	Local Mode ON, Local Mode OFF
Display Status:	LM (local mode) displayed in banner
Tagging:	Disabled, Enabled

18.3.6 SWITCH CONTROL

SWITCH CONTROL	
Operation:	Local (PB control and SLD) and Remote (asserted FlexLogic operands)
Function:	Opens/Closes the disconnect switch
Timers:	0.000 to 6000.000 s in steps of 0.001 s

18.3.7 SYNCHROCHECK

SYNCHROCHECK (25)	
Maximum Frequency Difference:	0.01 to 5.00 Hz in steps of 0.01 Hz for frequency window of f_{nom} ±5 Hz
Maximum Angle Difference:	1° to 100° in steps of 1°
Maximum Voltage Difference:	10 to 600000 V in steps of 1 V
Hysteresis for Maximum Frequency Difference:	0.01 to 0.10 Hz in steps of 0.01 Hz
Breaker Closing Time:	0.000 to 6000.000 s in steps of 0.001 s
Dead Source Function:	None, LB & DL, DB & LL, DB & DL, DB OR DL, DB XOR DL
Dead/Live Levels for Bus and Line:	0.00 to 1.50 x VT in steps of 0.01 x VT

18.3.8 TRIP BUS

TRIP BUS	
Number of Elements:	6
Number of Inputs:	16
Pickup Time Delay:	0.000 to 6000.000 s in steps of 0.001 s
Dropout Time Delay:	0.000 to 6000.000 s in steps of 0.001 s
Operate Time:	< 2 ms at 60 Hz
Timer Accuracy:	±3% of delay time or ±¼ cycle (whichever is greater) from pickup to operate

18.3.9 DIGITAL ELEMENTS

DIGITAL ELEMENTS	
Number of elements:	64
Operating signal:	Any FlexLogic operand
Operate time:	Digital Elements are processed once per cycle(16 ms at 60 Hz, 20 ms at 50 Hz)
Pickup Delay:	0.000 to 6000.000 s in steps of 0.001 s
Dropout Delay:	0.000 to 6000.000 s in steps of 0.001 s
Timer accuracy	±3% of delay setting or ±¼ cycle (whichever is greater) from pickup to operate 20 ms at 50 Hz)

18.4 MONITORING

18.4.1 HARMONIC DERATING

HARMONIC DERATING	
Timer Accuracy:	±3% of delay setting or ±3 cycle (whichever is greater) from pickup to operate

18.4.2 TAP CHANGER FAILURE

TAP CHANGER FAILURE	
Operating Parameter:	Tap Changer Position
Time Delay:	0.00 to 600.00 s
Timer Accuracy:	±3% of delay setting or ±2 cycles (whichever is greater) from pickup to operate

18.4.3 POWER FACTOR (55)

POWER FACTOR (55)	
Switch-In Level:	0.01 Lead to 1 to 0.01 Lag in steps of 0.01
Dropout Level:	0.01 Lead to 1 to 0.01 Lag in steps of 0.01
Delay:	0.000 to 6000.000 s in steps of 0.001 s
Minimum Operating Voltage:	0.00 to 1.25 x VT in steps of 0.01 x VT
Timer Accuracy:	±3% of delay setting or ±1¼ cycle (whichever is greater) from pickup to operate

18.4.4 FAULT LOCATOR

FAULT LOCATOR	
Method:	Single-ended
Voltage Source:	Wye-connected VTs, Delta-connected VTs and neutral voltage, delta-connected VTs and zero-sequence current (approximation)
Maximum Accuracy, (only if):	Fault resistance is zero or fault currents from all line terminals are in-phase
Relay Accuracy:	±1.5% (V > 10 V, I > 0.1 pu)
Worst-case Accuracy:	VT%error + user data ZLine%error + user dataRELAY ACCURACY%error + (1.5%)

18.4.5 BREAKER ARCING CURRENT

BREAKER ARCING CURRENT	
Mode:	3-pole
Principle:	accumulates breaker duty (I^2t) during fault
Initiation:	any operand
Alarm Threshold:	0 to 50000 kA2-cycle in steps of 1 kA2-cycle

BREAKER ARCING CURRENT	
Timer Accuracy:	±3% of delay setting or ±1 cycle (whichever is greater) from pickup to operate

18.4.6 BREAKER FAILURE

BREAKER FAILURE	
Mode:	3-pole
Current Supervision:	phase and neutral current (fundamental phasor magnitude)
Current Supervision Pickup:	0.050 to 30.000 x CT in steps of 0.001 x CT
Current Supervision Dropout:	97 to 98% of pickup
Current Supervision Accuracy:	For 0.1 to 2.0 x CT: ±0.5% of reading or ±0.4% of rated (whichever is greater) For > 2.0 x CT: ±1.5% of reading
Time Delay:	0.000 to 6000.000 s in steps of 0.001 s
Timer Accuracy:	±3% of delay setting or ±¼ cycle (whichever is greater) from pickup to operate
Reset Time:	19 to 30 ms at 1.5 to 20 x Pickup

18.4.7 BREAKER HEALTH

BREAKER HEALTH	
Timer Accuracy:	±3% of delay setting or ±1 cycle (whichever is greater) from pickup to operate

18.4.8 TRIP CIRCUIT MONITORING

TRIP CIRCUIT MONITOR (TCM)	
Applicable Voltage:	20 to 250 VDC
Trickle Current:	1 to 2.5 mA
Timing Accuracy:	±3 % or ±4 ms, whichever is greater

18.4.9 CLOSE CIRCUIT MONITORING

CLOSE CIRCUIT MONITOR (CCM)	
Applicable Voltage:	20 to 250 VDC
Trickle Current:	1 to 2.5 mA
Timing Accuracy:	±3 % or ±4 ms, whichever is greater

18.4.10 DEMAND

DEMAND	
Measured Values:	Phase A/B/C present and maximum current, three-phase present, maximum real/reactive/apparent power, minimum real/reactive/apparent power
Measurement Type:	Thermal Exponential, 90% response time (programmed): 5 to 90 min in steps of 1 min. Block Interval / Rolling Demand, time interval (programmed): 5 to 90 min in steps of 1 min.
Current Pickup Level (845, 850, 889):	10 to 10000 in steps of 1 A

DEMAND	
Dropout Level:	96-98% of Pickup level
Level Accuracy:	±2%

18.4.11 HARMONIC DETECTION

HARMONIC DETECTION	
Operating Parameter:	Current 2nd, 3rd, 4th, 5th harmonic or THD per phase
Timer Accuracy:	Harmonics: ±3% of delay setting or ±¼ cycle (whichever is greater) from pickup to operate. THD: ±3% of delay setting or ±3 cycles (whichever is greater) from pickup to operate

18.4.12 VOLTAGE DISTURBANCE

VOLTAGE DISTURBANCE	
Number of Elements:	3
Operating Parameter:	Va, Vb, Vc, or Vab, Vbc,Vca (RMS)
Number of Events in Records:	30

18.4.13 VOLTAGE SWELL

VOLTAGE SWELL	
Pickup Level:	0.02 to 3.00 x VT in steps of 0.01 x VT
Dropout Level:	97 to 98% of pickup
Pickup Delay:	0.000 to 6000.000 s in steps of 0.001s (Definite Time)
Operate Time:	< 25 ms at 1.1 x pickup at 60Hz < 30 ms at 1.1 x pickup at 50Hz
Timing Accuracy:	±0.5% of delay setting or ±¼ power cycles (whichever is greater) from pickup to operate

18.4.14 VOLTAGE SAG

VOLTAGE SAG	
Pickup Level:	0.00 to 1.50 x VT in steps of 0.01 x VT
Dropout Level:	102 to 103% of pickup
Level Accuracy:	±0.5% of reading from 10 to 208 V
Pickup Delay:	0.000 to 6000.000 s in steps of 0.001s (Definite Time)
Operate Time:	< 20 ms at 0.90 x pickup at 60 Hz < 25 ms at 0.90 x pickup at 50 Hz

18.4.15 TIME OF DAY TIMER

TIME OF DAY TIMER	
Number of Elements:	2
Setting Resolution:	1 minute
Accuracy:	±1 s

18.4.16 FAULT REPORTS

FAULT REPORTS	
Number of Reports:	15
Fault Location Method:	Single-ended
Voltage Source:	Wye-connected VTs, Delta-connected VTs and neutral voltage, delta-connected VTs and zero-sequence current (approximation)
Maximum Method Accuracy:	Fault resistance is zero or fault currents from all line terminals are in-phase
Relay Accuracy:	±1.5% (V > 10 V, I > 0.1 pu)
Other Accuracy Factors:	VT%error + user data CT%error + user data ZLine%error + user data

18.4.17 INCIPIENT FAULT PROTECTION

Incipient Fault Protection	
Principle	Detection of ½ cycle or less fundamental phasor overcurrent condition during normal load
Availability	One instances for 850-E and Two instances for 850-D
Pickup level	0.100 to 10.00 x CT in steps of 0.01
Reset delay	0.000 to 65.535 s in steps of 0.001
Operating mode	no.of Counts, Counts per window.
Timer Accuracy	±3% of delay setting or ±½ cycle (whichever is greater) from pickup to operate

18.5 RECORDING

18.5.1 TRANSIENT RECORDER

TRANSIENT RECORDER	
Default AC Channels:	5 currents + 4 voltages
Configurable Channels:	16 analog and 64 digital channels
Sampling Rate:	128/c, 64/c, 32/c, 16/c, 8/c
Trigger Source:	Any element pickup, dropout or operate, digital input or output change of state, FlexLogic operand
Trigger Position:	0 to 100%
Storage Capability:	Non-volatile memory

18.5.2 EVENT DATA

EVENT DATA	
Number of Records:	1024 (matches the existing Event Recorder)
Data Storage:	Non-volatile memory
Time-tag Accuracy:	One microsecond
Settings:	64 Configurable FlexAnalog parameters, Event Selector
Actuals:	Selected Event Number, Timestamp of Selected Event, Cause of Selected Event, 64 Configurable FlexAnalog values
Commands:	None (using existing Clear Event Recorder)

18.5.3 DATA LOGGER

DATA LOGGER	
Data Logger channels:	16
Data Logger Rate:	1 cycle, 1 sec., 30 sec., 1 min., 15 min., 30 min., 1 hour, 6 hours, 8 hours, 12 hours, 24 hours
Inputs:	Any analog parameter from the list of available analog parameters
Data Collection Mode:	Continuous, Triggered
Trigger Source:	Any digital flag from the list of digital flags
Trigger Position:	0 to 50% in steps of 1%
Channel 1(16) Mode:	Sample, Min, Max, Mean

18.5.4 EVENT RECORDER

EVENT RECORDER	
Number of events:	1024
Header:	relay name, order code, firmware revision
Content:	any element pickup, any element operate, digital input change of state, digital output change of state, self-test events
Data Storage:	non-volatile memory
Time-tag Accuracy:	to one microsecond

18.5.5 LAST TRIP DATA

LAST TRIP DATA	
Number of Records:	1
Data Storage:	Non-volatile memory
Time-tag Accuracy:	One microsecond
Actuals:	Event Number of Last Trip, Timestamp of Last Trip, Cause of Last Trip, 64 Configurable FlexAnalog values
Commands:	Clear Last Trip Data

18.6 USER-PROGRAMMABLE ELEMENTS

18.6.1 FLEXLOGIC

FLEXLOGIC	
Lines of code:	1024
Supported operations:	NOT, XOR, OR (2 to 16 inputs), AND (2 to 16 inputs), NOR (2 to 16 inputs), NAND (2 to 16 inputs), latch (reset-dominant), edge detectors, timers
Inputs:	any logical variable, contact, or virtual input
Number of timers:	32
Pickup delay:	0 to 60000 (ms, sec., min.) in steps of 1
Dropout delay:	0 to 60000 (ms, sec., min.) in steps of 1
Timer accuracy:	±3% of delay setting or ±¼ cycle (whichever is greater) from pickup to operate

18.6.2 FLEXELEMENTS

FLEXELEMENTS	
Number of elements:	8
Operating signal:	Any analog actual value, or two values in a differential mode
Operating signal mode:	Signed, or Absolute value
Operating mode:	Level, Delta
Comparison direction:	Over, Under
Operate time:	FlexElements are processed once per cycle (16 ms at 60 Hz, 20 ms at 50 Hz)
Pickup Level:	-30.000 to 30.000 pu in steps of 0.001 pu
Hysteresis:	0.1 to 50.0% in steps of 0.1%
Delta dt:	40 msec to 45 days
Pickup and dropout delays:	0.000 to 6000.000 s in steps of 0.001 s

18.6.3 FLEXSTATES

FLEXSTATES	
Number of States:	256 logical variables grouped under 16 Modbus addresses
Programmability:	Any FlexLogic operand, any digital input, any virtual input, any remote input

18.6.4 NON-VOLATILE LATCHES

NON-VOLATILE LATCHES	
Type:	Set-dominant or Reset-dominant
Range:	16 individually programmed
Output:	Stored in non-volatile memory
Execution sequence:	As input prior to protection, control and FlexLogic

18.6.5 FLEXCURVES

FLEXCURVES	
Number:	4 (A, B, C, D)
Reset points:	40 (0.00 to 0.98 x pickup)
Operate points:	80 (1.03 to 20.0 x pickup)
Time delay:	0 to 200,000,000 ms in steps of 1 ms
Saturation level:	20 times the pickup level

18.6.6 TAB PUSHBUTTONS

TAB PUSHBUTTONS	
Number of elements:	1 (20 Tab Pushbuttons)
Data Storage:	Non-volatile memory
Mode:	Self-reset, latched
Display Message:	2 lines; 15 characters per line
Dropout Timer:	0.000 to 60.000 s in steps of 0.005
Auto-reset Timer:	0.2 to 600.0 s in steps of 0.1
Hold Timer:	0.1 to 10.0 s in steps of 0.1
Timer Accuracy:	±3% of delay setting or ±¼ cycle (whichever is greater) from pickup to operate

18.6.7 USER-PROGRAMMABLE LEDS

USER-PROGRAMMABLE LEDS	
Number:	17 (14 + 3 PB LEDS)
Programmability:	any logic variable, contact, or virtual input
Reset mode:	self-reset or latched

18.6.8 USER-PROGRAMMABLE PUSHBUTTONS

USER-PROGRAMMABLE PUSHBUTTONS	
Number of pushbuttons:	3 (Membrane and Rugged Front Panels)
Mode:	Self-reset, latched
Display message:	2 lines of 13 characters on each line
Dropout timer:	0.000 to 60.000 s in steps of 0.005
Auto-reset timer:	0.2 to 600.0 s in steps of 0.1
Hold timer:	0.0 to 10.0 s in steps of 0.1

18.7 METERING

18.7.1 RMS PARAMETERS

Currents	
Parameters:	Phase A, B, C, Neutral, Ground
Accuracy:	±0.25% of reading or ±0.2% of rated (whichever is greater) from 0.1 to 2.0 x CT±1% of reading > 2.0 x CT

Voltages	
Parameters:	Wye VTs: A-n, B-n, C-n, A-B, B-C, C-A, Average Phase, Neutral and Residual. Delta VTs: A-B, B-C, C-A, Neutral and Residual
Accuracy:	±0.5% of reading from 15 to 208 V±2% for open Delta connections

Sensitive Ground	
Parameter:	Isg
Accuracy (from 0.01 to 0.2 x CT):	±1.30% of rated
Accuracy (> 0.2 x CT):	±0.30% of reading or ±0.60% of rated (whichever is greater)

Real Power (Watts)	
Range:	-214748364.8 kW to 214748364.7 kW
Parameters:	Wye VTs: 3-phase and per phase. Delta VTs: 3-phase only
Accuracy:	±1.0% of reading or 0.2 kW (whichever is greater) at -0.8 < PF ≤ -1.0 and 0.8 < PF < 1.0

Reactive Power (Vars)	
Range:	-214748364.8 kvar to 214748364.7 kvar
Parameters:	Wye VTs: 3-phase and per phase. Delta VTs: 3-phase only
Accuracy:	±1.0% of reading or 0.2 kvar (whichever is greater) at -0.2 < PF ≤ 0.2

Apparent Power (VA)	
Range:	0 kVA to 214748364.7 kVA
Parameters:	Wye VTs: 3-phase and per phase. Delta VTs: 3-phase only
Accuracy:	±1.0% of reading or 0.2 kVA (whichever is greater)

Power Factor	
Parameters:	3-phase; per phase if VT is Wye
Range:	0.01 Lag to 1.00 to 0.01 Lead
Accuracy:	±0.02 for 50 Hz and 60 Hz; ±0.05 for 25 Hz

Watt-hours (positive and negative)	
Range:	0.000 MWh to 4294967.295 MWh
Parameters:	3-phase only
Update Rate:	50 ms
Accuracy:	±2.0% of reading

Var-hours (positive and negative)	
Range:	0.000 Mvarh to 4294967.295 Mvarh
Parameters:	3-phase only
Update Rate:	50 ms
Accuracy:	±2.0% of reading

18.7.2 PHASORS

Current	
Parameters:	Phase A, B, C, Neutral and Ground
Magnitude Accuracy:	±0.5% of reading or ±0.2% of rated (whichever is greater) from 0.1 to 2.0 x CT ±1.0% of reading > 2.0 x CT
Angle Accuracy:	2° (3° for 25 Hz)

Voltages	
Parameters:	Wye VTs: A-n, B-n, C-n, A-B, B-C, C-A, Average Phase, Neutral and Residual Delta VTs: A-B, B-C, C-A, Neutral and Residual
Magnitude Accuracy:	±0.5% of reading from 15 to 208 V ±1% for open Delta connections ±10% for 25 Hz with 150 V <V < 208V
Angle Accuracy:	0.5° (15 V <V < 208 V)

18.7.3 FREQUENCY

FREQUENCY	
Range:	2.000 to 90.000 Hz
Accuracy at:	V = 15 to 208 V: ±0.01 Hz (input frequency 15 to 70 Hz); I = 0.1 to 0.4 x CT: ±0.020 Hz (input frequency 15 to 70 Hz); I > 0.4 x CT: ±0.01 Hz (input frequency 15 to 70 Hz)

18.7.4 CURRENT AND VOLTAGE HARMONICS

CURRENT AND VOLTAGE HARMONICS	
Parameters:	Magnitude of each harmonic and THD
Range:	2nd to 25th harmonic: per-phase displayed as % of f_1 fundamental frequency THD: per-phase displayed as % of f_1

18.7.5 DEMAND

DEMAND	
Measured Values:	Phase A/B/C present and maximum current, three-phase present, maximum real/reactive/apparent power, minimum real/reactive/apparent power
Measurement Type:	Thermal Exponential, 90% response time (programmed): 5 to 90 min in steps of 1 min. Block Interval / Rolling Demand, time interval (programmed): 5 to 90 min in steps of 1 min.
Current Pickup Level (845, 850, 889):	10 to 10000 in steps of 1 A
Dropout Level:	96-98% of Pickup level
Level Accuracy:	±2%

18.7.6 STATION BATTERY MONITORING

STATION BATTERY MONITORING	
Parameters:	DC power supply voltage
Range:	0.0 to 400.0 V in steps of 0.1 V
Accuracy:	±1% of reading or ±1 Vdc (whichever is greater)
Parameters:	DC power supply current
Range:	0.000 to 5.000 A in steps of 0.001 A
Accuracy:	±5% of reading or ±4mA (whichever is greater)

18.8 INPUTS

18.8.1 AC CURRENTS

AC CURRENTS	
CT Rated Primary:	1 to 20000 A
CT Rated Secondary:	1 A or 5 A based on relay ordering
Burden:	< 0.2 VA at rated secondary
Conversion Range:	Standard CT: 0.02 to 46 x CT rating RMS symmetrical. Sensitive Ground CT (5A/1A): 0.002 to 4.6 x CT rating RMS symmetrical
Short Term CT Withstand:	1 second at 100 x rated current 2 seconds at 40 x rated current Continuous 4 x rated current

18.8.2 AC VOLTAGES

AC VOLTAGE	
VT Range:	10 to 260 V
Nominal Frequency:	20 to 65 Hz
Burden:	<0.0042 VA at 120 V
Conversion Range:	1 to 275 V
Voltage Withstand:	continuous at 260 V to neutral. 1 min/hr at 420 V to neutral

18.8.3 LEA VOLTAGE INPUTS

LOW ENERGY ANALOG (LEA) VOLTAGE INPUTS	
Number of LEA Sensors:	6 LEA inputs, 2 3-phase voltage banks
Max. Input Range:	+18 Vpeak (12*1.4142 =16.97peak < 18 Vpeak)
LEA Phase-Neutral Range:	1.0 Vrms to 12.0 Vrms (50Hz or 60Hz sinusoidal)
Nominal Phase-Neutral Range:	1.0 Vrms to 10.0 Vrms
Burden:	< 0.1 VA
Accuracy:	±0.5% (1 V-12 Vrms) and ±0.5° (1 V-12 Vrms)
Voltage withstand for 10 seconds (thermal):	300 VAC
Input Impedance:	2 MΩ (phase-to-neutral)

18.8.4 ANALOG INPUTS

ANALOG INPUTS	
Current Input (mA DC):	0 to 1mA, 0 to 5mA, 0 to 10mA, 0 to 20mA, 4 to 20mA (configurable)
Input Impedance:	375 Ω ±10%
Conversion range:	0 to +21 mA DC
Accuracy:	±1% of full scale,
Type:	Passive
Sampling Interval:	Typically 500 ms

ANALOG INPUTS	
Cable:	Twisted-pair shielded cable

18.8.5 FREQUENCY

FREQUENCY	
Nominal frequency setting:	50 Hz, 60 Hz
Sampling frequency:	64 samples per power cycle. 128 samples per power cycle (available for transient recorder)
Tracking frequency range:	3 to 72 Hz

18.8.6 ARC FLASH SENSOR/FIBER

ARC FLASH SENSOR/FIBER	
Number of Point Sensors:	8 (Point and/or Loop sensors). 4 sensors per instance
Detection Radius:	180 degrees
Fiber Length (Point Sensor):	35 m
Fiber Length (Loop Sensor):	70 m
Fiber Size:	1000 um
Mode:	Multi-mode
Connector:	Small Media Interface (SMI)
Fiber Type:	Plastic Optical Fiber
Bend Radius:	>25 mm

18.8.7 CONTACT INPUTS

CONTACT INPUTS	
Number of Inputs:	Based on relay order code
Type:	Wet or Dry (Wet for I/O Card C)
Wet Contacts:	300 VDC maximum
Selectable thresholds:	Programmable: 17 VDC (For 24 VDC Operating Voltage) 33 VDC (For 48 VDC and 60 VDC Operating Voltage) 84 VDC (For 110 VDC and 125 VDC Operating Voltage) 166 VDC (For 220 VDC and 250 VDC Operating Voltage)
Tolerance:	17 VDC: Vlow (off) <10V, Vhigh (on) >19V. 33 VDC: Vlow (off) <23V, Vhigh (on) >38V. 84 VDC: Vlow (off) <70V, Vhigh (on) >88V. 166 VDC: Vlow (off) <140V, Vhigh (on) >176V.
Recognition time:	1 ms (typical)
Debounce time:	0.0 to 16.0 ms in steps of 0.5 ms
Continuous current draw (burden):	2 mA (1 mA for I/O Card C)

Note:
The maximum load current that can be delivered by the internal +24 V supply is 80 mA. When using the internal +24 V supply this current limitation must be considered.

CLOCK	
Setup:	Date and Time, Daylight Saving Time, UTC (Coordinated Universal Time)
Backup Retention:	31 days
Typical clock drift:	+/- 5minutes per month

Note:
For relays with Hardware Revision A, Clock Backup Retention is only 1 hour

18.8.8 IRIG-B INPUT

IRIG-B INPUT	
Auto-detect:	DC and AM
Amplitude Modulation:	1 V to 10 V pk-to-pk
DC Shift:	TTL
Input Impedance:	40 kΩ
Isolation:	2 kV
IRIG-B Format:	IEEE 1344-1995 (with control bits extension)

18.8.9 RTD INPUTS

RTD INPUTS	
Types (3-wire):	100 Ω Platinum, 120 Ω Nickel, 100 Ω Nickel, 10 Ω Copper (RMIO only supports 100Ω Platinum)
Sensing current:	5 mA
Range:	–40 to +250°C (-40 to +482°F)
Accuracy (onboard):	±2°C (±4°F)
Accuracy (using RMIO):	±3°C (±5.4°F)
Isolation:	36 V pk-pk (a group of RTDs to ground) 2 kV from base unit (RMIO only)
Lead Resistance:	25 Ω max. per lead for platinum or nickel and 3 Ω max. per lead for copper RTDs
RTD Inputs Available:	6 RTD inputs with one module or 12 inputs with 2 modules (IO cards R or S). 1 RTD input with IO card L.6 to 12 RTD inputs with RMIO modules 1 through 4
Cable:	Three-wire shielded cable

18.9 OUTPUTS

18.9.1 ANALOG OUTPUTS

ANALOG OUTPUTS	
Range (configurable):	0 to 1 mA, 0 to 5 mA, 0 to 10 mA, 0 to 20 mA, 4 to 20 mA
Max. load resistance:	10 kΩ @ 1 mA, 600 Ω @ 20 mA
Accuracy:	±1% of full scale
Isolation:	500V DC for one minute (functional isolation between analog inputs and output group; and each group of chassis)
Driving Signal:	any Analog quantity
Sampling Interval:	Typically 100 ms
Upper and lower limit (for the driving signal):	-90 to 90 pu in steps of 0.001
Cable:	Twisted-pair shielded cable

18.9.2 FORM C OUTPUT RELAYS

FORM C OUTPUT RELAYS	
Maximum Working Voltage:	300VDC/300VAC
Make and short-time carry current:	30A/0.2s per IEEE C37.90
Maximum Continuous Current per contact:	10A
Total maximum current for contacts connected to common potential:	10A
Breaking Capacity (DC inductive) with respect to source voltage, @L/R = 40 ms (10000 Operation, per IEC 60255-1 2009-08):	24 V-1 A; 48 V-0.5 A; 125 V-0.3 A; 250 V-0.2 A
Breaking Capacity (DC resistive) with respect to source voltage:	24 V-10 A; 48 V-1.5 A; 125 V-0.4 A; 250 V-0.3 A
Breaking Capacity (AC inductive) with respect to source voltage, @PF= 0.4 or less:	A300, Pilot duty 720 VA
Breaking Capacity (AC resistive) with respect to source voltage:	277V-10A
Operating Time (coil energization to contact closure, resistive load):	<8ms
Contact Material:	Silver alloy
Mechanical Endurance (no load):	> 10,000
Maximum Frequency of operation:	360/h
Protection Device across contact:	EMI Suppression Cap, 1nF

Note:
For order codes with a combined total of 2 or 3 type A and M I/O cards, the following ratings are applied to meet UL508 requirements: 1 second on / 10 seconds off, 9% duty cycle

18.9.3 FORM A VOLTAGE MONITOR

FORM-A VOLTAGE MONITOR	
Applicable voltage:	20 to 250 VDC
Trickle current:	1 to 2.5 mA
Timer accuracy:	±3% of operate time or ±¼ cycle (whichever is greater)

18.9.4 DOUBLE POLE OUTPUT RELAYS (I/O CARDS D AND P)

DOUBLE POLE OUTPUT RELAYS, I/O CARD D AND P	
Maximum Working Voltage:	300 VDC / 300 VAC
Make and short-time carry current:	30A/0.2s per IEEE C37.90
Maximum Continuous Current per contact:	5A
Total maximum current for contacts connected to common potential:	10A
Breaking Capacity (DC inductive) with respect to source voltage, @L/R = 40 ms (10000 Operation, per IEC 60255-1 2009-08):	24 V - 1 A 48 V - 0.5 A 125 V - 0.3 A 250 V - 0.2 A
Breaking Capacity (DC resistive) with respect to source voltage:	24 V - 8 A 48 V - 2 A 125 V - 0.3 A 250 V - 0.2 A
Breaking Capacity (AC inductive) with respect to source voltage, @PF= 0.35 or less:	B300, Pilot duty 360 VA
Breaking Capacity (AC resistive) with respect to source voltage:	277 V - 5 A
Operating Time (coil energization to contact closure, resistive load):	<8ms
Contact Material:	Silver alloy
Mechanical Endurance (no load):	> 10,000
Maximum Frequency of operation:	360/h
Protection Device across contact:	EMI Suppression Cap, 1nF

18.9.5 FORM A AND FORM C OUTPUT RELAYS (I/O CARDS B AND K)

FORM A AND FORM C OUTPUT RELAYS, I/O CARDS B AND K	
Maximum Working Voltage:	300 VDC / 300 VAC
Make and short-time carry current:	30A/0.2s per IEEE C37.90
Maximum Continuous Current per contact:	5A
Total maximum current for contacts connected to common potential:	10A
Breaking Capacity (DC inductive) with respect to source voltage, @L/R = 40 ms (10000 Operation, per IEC 60255-1 2009-08):	24 V - 1 A 48 V - 0.5 A 125 V - 0.3 A 250 V - 0.2 A
Breaking Capacity (DC resistive) with respect to source voltage:	24 V - 6 A 48 V - 0.7 A 125 V - 0.5 A 250 V - 0.3 A

FORM A AND FORM C OUTPUT RELAYS, I/O CARDS B AND K	
Breaking Capacity (AC inductive) with respect to source voltage, @PF= 0.35 or less:	B300, Pilot duty360 VA
Breaking Capacity (AC resistive) with respect to source voltage:	277 V - 5 A
Operating Time (coil energization to contact closure, resistive load):	<8ms
Contact Material:	Silver alloy
Mechanical Endurance (no load):	> 10,000
Maximum Frequency of operation:	360/h
Protection Device across contact:	EMI Suppression Cap, 1nF

18.9.6 SOLID STATE RELAYS

SOLID STATE RELAYS ON I/O CARD M	
Maximum Working Voltage:	300 VDC
Make and short-time carry current:	30A/0.2 s per IEEE C37.90
Maximum Continuous Current per contact:	10 A
Total maximum current for contacts connected to common potential:	10 A
Breaking Capacity (DC inductive) with respect to source voltage, @L/R = 40 ms (10000 Operation, per IEC 60255-1 2009-08):	250 VDC - 10 A (or 2.5 kW) (Maximum 10 A and 300 VDC)
Breaking Capacity (DC resistive) with respect to source voltage:	250 V - 30 A (or 7500 W)
Breaking Capacity (AC inductive) with respect to source voltage, @PF= 0.35 or less:	N/A
Breaking Capacity (AC resistive) with respect to source voltage:	N/A
Operating Time (coil energization to contact closure, resistive load):	<0.2 ms
Contact Material:	Hybrid
Mechanical Endurance (no load):	> 10,000
Maximum Frequency of operation:	360/h
Protection Device across contact:	MO V, rated @ 250 VAC/320 VDC

18.9.7 PULSED OUTPUTS

PULSED OUTPUTS	
Mode:	3-phase positive and negative active energy measurement, 3-phase positive and negative reactive energy measurements
Principle:	Pulsed output is energized for one second and then de-energized for one second after the programed energy increment.

18.9.8 COIL ACTUATOR OUTPUTS

COIL ACTUATOR OUTPUTS	
No. of Coil Actuators:	3 (1 per phase)

COIL ACTUATOR OUTPUTS	
Open Maximum Current:	5 to 20 A
Close Maximum Current:	5 to 20 A
Open Pulse Time:	15 to 100 ms
Close Pulse Time:	15 to 100 ms
Operate Time:	< 8 ms
Intervals between full sequence operation:	Minimum 60 s between two consecutive full sequence operations. Minimum 30 mins after 6 consecutive full sequence operations with minimum interval.

18.10 POWER SUPPLY

18.10.1 VOLTAGE SUPPLIES

(FOR H AND R OPTIONS ONLY)	
Nominal DC Voltage:	125 to 250 V
Minimum DC Voltage:	88 V
Maximum DC Voltage:	300 V
Nominal AC Voltage:	100 to 240 V at 50/60 Hz
Minimum AC Voltage:	88 V at 50 to 60 Hz
Maximum AC Voltage:	265 V at 50 to 60 Hz

(FOR L DC OPTION ONLY)	
Nominal DC Voltage:	24 V to 48 V
Minimum DC Voltage:	20 V
Maximum DC Voltage:	60 V

18.10.2 POWER CONSUMPTION

POWER CONSUMPTION	
Typical:	20 W / 40 VA
Maximum:	34 W / 70 VA

18.10.3 VOLTAGE LOSS RIDE-THROUGH

VOLTAGE LOSS RIDE THROUGH	
Typical (at typical power consumption):	50 ms
For R order code:	200 ms

18.11 COMMUNICATIONS

18.11.1 ETHERNET

µETHERNET – BASE OFFERING (“SE” OPTION)	
Modes:	10/100 Mbps
One Port:	RJ45
Protocol:	Modbus TCP, DNP
Cable type:	CAT 5 or CAT 6 Shielded Twisted Pair

ETHERNET – CARD OPTION “C” - 2X COPPER (RJ45) PORTS	
Modes:	10/100 MB
Two Ports:	RJ45 (with this option both enabled ports are on the communications card; the Ethernet port located on the base CPU is disabled)
Protocols:	Modbus TCP, DNP3.0, IEC60870-5-104, IEC 61850 Ed.2, IEC 61850 Ed.2 GOOSE, IEEE 1588 (PTP version 2), SNTP, IEC 62439-3 clause 4 (PRP)

ETHERNET – CARD OPTION “S” - 2X ST FIBER PORTS	
Emitter, fiber type:	1300 nm Multi-mode (see table below)
Two Ports:	ST (with this option both enabled ports are on the communications card; the Ethernet port located on the base CPU is disabled)
Protocols:	Modbus TCP, DNP3.0, IEC60870-5-104, IEC 61850 Ed.2, IEC 61850 Ed.2 GOOSE, IEEE 1588 (PTP version 2), SNTP, IEC 62439-3 clause 4 (PRP), OPC-UA
Wavelength:	1310nm
Typical link distance:	4 km

ETHERNET – CARD OPTION “S” - 2X ST FIBER PORTS					
Emitter, fiber type	Cable type	Transmit power	Received sensitivity	Power budget max	Optical input power
1300 nm Multi-mode	62.5/125 µm	-20 dBm	-31 dBm	11 dBm	-14 dBm
	50/125 µm	-23 dBm	-31 dBm	7.5 dBm	-14 dBm

18.11.2 USB

USB	
Standard specification:	Compliant with USB 2.0
Protocols:	Modbus TCP, TFTP

18.11.3 SERIAL

SERIAL	
RS485 port:	Isolated
Baud rates:	Supports 9600, 19200, 38400, 57600, and 115200 kbps

SERIAL	
Response time:	10 ms typical
Parity:	None, Odd, Even
Protocol:	Modbus RTU, DNP 3.0, IEC 60870-5-103
Maximum distance:	1200 m (4000 feet)
Isolation:	2 kV
Cable:	24 AWG stranded, shielded twisted-pair

18.11.4 WIFI

WIFI	
Standard specification:	IEEE802.11bgn
Range:	30 ft (direct line of sight)

18.11.5 REMOTE MODBUS

REMOTE MODBUS DEVICE PROFILE	
Device Name:	BSG3 (13 alphanumeric characters maximum)
IP Address:	0.0.0.0 – standard Ethernet address
Slave Address:	254 (1 to 254)
Modbus Port:	502 (0 to 10000, default 502)
Poll Rate:	1 minute (OFF, 1 to 120 minutes), the continuous mode poll interval is defined as the poll rate interval
Trigger:	Off (any FlexLogic Operand), the trigger mode is based on the FlexLogic operand designed to trigger the poll

18.11.6 CONTROLLER AREA NETWORK

CAN (RMIO)	
Maximum Distance:	250 m (820 ft)
Cable Type:	Shielded twisted pair
Cable Gauge:	24 AWG for distances up to 100m; 22 AWG for distances up to 250 m.

18.12 CERTIFICATIONS AND APPROVALS

18.12.1 APPROVALS

	APPLICABLE COUNCIL DIRECTIVE	ACCORDING TO
CE compliance	Low voltage directive	EN60255-27
	EMC Directive	EN60255-26
	R&TTE Directive	ETSI EN300 328, ETSI EN301 489-1, ETSI EN301-489-17,
	RoHS Directive	RoHS Directive 2011/65/EU, 2015/863
North America	cULus	UL508, e57838 NKCR, NRGU
		CSA C22.2.No 14, e57838 NKCR7, NRGU7
ISO	Manufactured under a registered quality program	ISO9001

18.12.2 TESTING AND CERTIFICATION

Testing and Certification

TEST	REFERENCE STANDARD	TEST LEVEL
Dielectric voltage withstand	EN60255-5/IEC60255-27	2.3 kV
Impulse voltage withstand	EN60255-5/IEC60255-27	5 kV
Insulation resistance	IEC60255-27	500 VDC
Damped Oscillatory	IEC61000-4-18	2.5 kV CM, 1 kV DM, 1 MHz
Electrostatic Discharge	EN61000-4-2	Level 4
RF immunity	EN61000-4-3	Level 3
Fast Transient Disturbance	EN61000-4-4	Class A and B
Surge Immunity	EN61000-4-5	Level 3
Conducted RF Immunity	EN61000-4-6	Level 3
Power Frequency Immunity	IEC60255-26	Class A & B
Voltage variation, interruption and Ripple DC	IEC60255-26	PQT levels based on IEC61000-4-29, IEC61000-4-11 and IEC61000-4-17
Radiated & Conducted Emissions	CISPR11 /CISPR22	Class A
Sinusoidal Vibration	IEC60255-21-1	Class 1
Shock & Bump	IEC60255-21-2	Class 1
Seismic	IEC60255-21-3	Class 2
Power magnetic Immunity	IEC61000-4-8	Level 5
Pulse Magnetic Immunity	IEC61000-4-9	Level 4
Damped Magnetic Immunity	IEC61000-4-10	Level 4
Voltage Dip & interruption	IEC61000-4-11	0, 40, 70, 80% dips, 250/300 cycle interrupts
Harmonic Immunity	IEC61000-4-13	Class 3
Conducted RF Immunity 0-150kHz	IEC61000-4-16	Level 4
Ingress Protection	IEC60529	IP54 front

TEST	REFERENCE STANDARD	TEST LEVEL
Environmental (Cold)	IEC60068-2-1	-40C 16 hrs
Environmental (Dry heat)	IEC60068-2-2	85C 16hrs
Relative Humidity Cyclic	IEC60068-2-30	6 day humidity variant 2
EFT	IEEE/ANSI C37.90.1	4kV, 5 kHz
Damped Oscillatory	IEEE/ANSI C37.90.1	2.5 kV, 1 MHz
Dielectric Between contacts	IEEE C37.90	1500Vrms
Make and Carry	IEEE C37.90	30A /200 ops
Electrostatic Discharge (ESD)	IEEE/ANSI C37.90.3	8kV DC/ 15 kV AD
Product Safety	IEC60255-27	As per standard
Rated Burden,	IEC60255-1	Sec 6.10
Contact Performance	IEC60255-1	Sec 6.11

Note:
May contain components with FCC ID: XF6-RS9110N1122 and IC ID: 8407A-RS9110N1122

18.13 PHYSICAL DIMENSIONS

Physical dimensions are dependent on the model. all relevant information is available in the Installation chapter.

18.14 ENVIRONMENTAL

AMBIENT TEMPERATURES	
Storage/Shipping:	-40°C to 85°C
Operating:	-40°C to 60°C
Humidity	Operating up to 95% (non condensing) @ 55°C (As per IEC60068-2-30 Variant 2, 6 days)
Altitude:	2000m (standard base reference evaluated altitude) 5000m (maximum achievable altitude)
Pollution Degree:	II
Overvoltage Category:	II
Ingress Protection:	IP54 Front (845,850, 869, 889) IP 50 Front (859)
Insulation Class:	1
Noise:	0 dB

18.15 LONG-TERM STORAGE

The device should be stored in an environment that is dry, corrosive-free, and not in direct sunlight.

Correct storage will prevent premature component failures caused by environmental factors such as moisture or corrosive gases. Exposure to high humidity or corrosive environments will prematurely degrade the electronic components in any electronic device regardless of its use or manufacturer, unless specific precautions, such as those mentioned in the Environmental section, are taken.

We recommend that you power up all stored relays once per year, for one hour continuously, to avoid deterioration of electrolytic capacitors and subsequent relay failure.

APPENDIX A

APPENDIX A

1 WARRANTY

For products shipped as of 1 October 2013, GE Vernova warrants most of its GE manufactured products for 10 years. For warranty details including any limitations and disclaimers, see the GE Vernova Terms and Conditions on the GE Vernova website.

For products shipped before 1 October 2013, the standard 24-month warranty applies.

2 REVISION HISTORY

1601-0298-A1MANUAL PART NUMBER	RELEASE DATE
1601-0298-A1	5 December 2013
1601-0298-A2	12 December 2013
1601-0298-A3	15 January 2014
1601-0298-A4	May 2014
1601-0298-A5	August 2014
1601-0298-A6	December 2014
1601-0298-A7	May 2015
1601-0298-A8	August 2015
1601-0298-A9	March 2016
1601-0298-AA	December 2016
1601-0298-AB	July 2017
1601-0298-AC	February 2018
1601-0298-AD	March 2018
1601-0298-AE	July 2018
1601-0298-AF	December 2018
1601-0298-AG	May 2019
1601-0298-AH	January 2020
1601-0298-AI	August 2020
1601-0298-AJ	November 2020
1601-0298-AK	June 2021
1601-0298-AL	December 2022
1601-0298-AM	September 2023

For information on the updates included in this release of the Instruction Manual, please refer to the latest release notes online.

GE VERNOVA

© 2024 GE Vernova. All rights reserved. Information contained in this document is indicative only. No representation or warranty is given or should be relied on that it is complete or correct or will apply to any particular project. This will depend on the technical and commercial circumstances. It is provided without liability and is subject to change without notice. Reproduction, use or disclosure to third parties, without express written authority, is strictly prohibited.

E83849
LISTED
IND.CONT. EQ.
52TL