GE VERNOVA

C70 Capacitor Bank Protection and Control System

UR Series Instruction Manual

C70 Revision: 7.2x

Manual P/N: 1601-9015-AA7

E83849
LISTED
IND.CONT. EQ.
52TL

Copyright © 2025 GE Vernova. All rights reserved.

GridBeats, Universal Relay, Multilin, MiCOM, S1 Agile, P40 Agile, DS Agile, EnerVista, CyberSentry, HardFiber, FlexLogic, FlexElement, FlexCurve, FlexAnalog, FlexInteger and FlexState are trademarks or registered trademarks of GE Vernova.

The contents of this manual are the property of GE Vernova. This documentation is furnished on license and may not be reproduced in whole or in part without the permission of GE Vernova. The content of this manual is for informational use only and is subject to change without notice.

It is the responsibility of the user for verifying and validating the suitability of all GE Vernova products. This equipment must be used within its design limits. The proper application including configuration and setting of this product to suit the power system assets is the responsibility of the user, who is also required to ensure that all local or regional safety guidelines are adhered to. Incorrect application of this product could risk damage to property/the environment, personal injuries or fatalities and shall be the sole responsibility of the person/entity applying and qualifying the product for use.

The content in this document has been developed to provide guidance to properly install, configure and maintain this product for its intended applications. This guidance is not intended to cover every possible contingency that may arise during commissioning, operation, service, or maintenance activities. Should you encounter any circumstance's not clearly addressed in this document, contact your local GE Vernova service site.

IT IS THE SOLE RESPONSIBILITY OF THE USER TO SECURE THEIR NETWORK AND ASSOCIATED DEVICES AGAINST CYBER SECURITY INTRUSIONS OR ATTACKS. GE VERNOVA AND ITS AFFILIATES ARE NOT LIABLE FOR ANY DAMAGES AND/OR LOSSES ARISING FROM OR RELATED TO SUCH SECURITY INTRUSION OR ATTACKS.

TABLE OF CONTENTS

1. GETTING STARTED

1.1 IMPORTANT PROCEDURES
1.1.1 CAUTIONS AND WARNINGS 1-1
1.1.2 INSPECTION PROCEDURE 1-2

1.2 UR OVERVIEW
1.2.1 INTRODUCTION TO THE UR 1-3
1.2.2 HARDWARE ARCHITECTURE 1-3
1.2.3 SOFTWARE ARCHITECTURE 1-4

1.3 ENERVISTA UR SETUP SOFTWARE
1.3.1 SYSTEM REQUIREMENTS 1-5
1.3.2 INSTALLATION 1-5
1.3.3 CONFIGURING THE C70 FOR SOFTWARE ACCESS 1-6
1.3.4 USING THE QUICK CONNECT FEATURE 1-9
1.3.5 CONNECTING TO THE C70 RELAY 1-15
1.3.6 SETTING UP CYBERSENTRY AND CHANGING DEFAULT PASSWORD 1-17

1.4 UR HARDWARE
1.4.1 MOUNTING AND WIRING 1-18
1.4.2 COMMUNICATIONS 1-18
1.4.3 FACEPLATE DISPLAY 1-18

1.5 USING THE RELAY
1.5.1 FACEPLATE KEYPAD 1-19
1.5.2 MENU NAVIGATION 1-19
1.5.3 MENU HIERARCHY 1-19
1.5.4 RELAY ACTIVATION 1-20
1.5.5 RELAY PASSWORDS 1-20
1.5.6 FLEXLOGIC CUSTOMIZATION 1-20
1.5.7 COMMISSIONING 1-21

2. PRODUCT DESCRIPTION

2.1 INTRODUCTION
2.1.1 OVERVIEW 2-1
2.1.2 SECURITY 2-3
2.1.3 IEC 870-5-103 PROTOCOL 2-7

2.2 ORDER CODES
2.2.1 OVERVIEW 2-8
2.2.2 ORDER CODES WITH ENHANCED CT/VT MODULES 2-8
2.2.3 ORDER CODES WITH PROCESS BUS MODULES 2-10
2.2.4 REPLACEMENT MODULES 2-13

2.3 SIGNAL PROCESSING
2.3.1 UR SIGNAL PROCESSING 2-15

2.4 SPECIFICATIONS
2.4.1 PROTECTION ELEMENTS 2-17
2.4.2 USER-PROGRAMMABLE ELEMENTS 2-20
2.4.3 MONITORING 2-21
2.4.4 METERING 2-21
2.4.5 INPUTS 2-22
2.4.6 POWER SUPPLY 2-23
2.4.7 OUTPUTS 2-23
2.4.8 COMMUNICATION PROTOCOLS 2-24
2.4.9 INTER-RELAY COMMUNICATIONS 2-25
2.4.10 ENVIRONMENTAL 2-26
2.4.11 TYPE TESTS 2-27
2.4.12 PRODUCTION TESTS 2-28
2.4.13 APPROVALS 2-28
2.4.14 MAINTENANCE 2-28

3. HARDWARE

3.1 DESCRIPTION
3.1.1 PANEL CUTOUT 3-1
3.1.2 REAR TERMINAL LAYOUT 3-8

3.2 WIRING

3.2.1 TYPICAL WIRING 3-10
3.2.2 DIELECTRIC STRENGTH 3-11
3.2.3 CONTROL POWER 3-11
3.2.4 CT/VT MODULES 3-12
3.2.5 PROCESS BUS MODULES 3-14
3.2.6 CONTACT INPUTS AND OUTPUTS 3-14
3.2.7 TRANSDUCER INPUTS/OUTPUTS 3-25
3.2.8 RS232 FACEPLATE PORT 3-28
3.2.9 CPU COMMUNICATION PORTS 3-28
3.2.10 IRIG-B 3-32

3.3 DIRECT INPUT/OUTPUT COMMUNICATIONS

3.3.1 DESCRIPTION 3-33
3.3.2 FIBER: LED AND ELED TRANSMITTERS 3-34
3.3.3 G.703 INTERFACE 3-36
3.3.4 RS422 INTERFACE 3-39
3.3.5 IEEE C37.94 INTERFACE 3-41

4. HUMAN INTERFACES

4.1 ENERVISTA UR SETUP INTERFACE

4.1.1 INTRODUCTION 4-1
4.1.2 CREATING A SITE LIST 4-1
4.1.3 ENERVISTA UR SETUP OVERVIEW 4-1
4.1.4 ENERVISTA UR SETUP MAIN WINDOW 4-3

4.2 EXTENDED ENERVISTA UR SETUP FEATURES

4.2.1 SETTINGS TEMPLATES 4-4
4.2.2 SECURING AND LOCKING FLEXLOGIC EQUATIONS 4-8
4.2.3 SETTINGS FILE TRACEABILITY 4-10

4.3 FACEPLATE INTERFACE

4.3.1 FACEPLATE 4-13
4.3.2 LED INDICATORS 4-14
4.3.3 CUSTOM LABELING OF LEDS 4-17
4.3.4 DISPLAY 4-22
4.3.5 KEYPAD 4-22
4.3.6 BREAKER CONTROL 4-22
4.3.7 MENUS 4-23
4.3.8 CHANGING SETTINGS 4-25

5. SETTINGS

5.1 OVERVIEW

5.1.1 SETTINGS MENU 5-1
5.1.2 INTRODUCTION TO ELEMENTS 5-4
5.1.3 INTRODUCTION TO AC SOURCES 5-5

5.2 PRODUCT SETUP

5.2.1 SECURITY 5-8
5.2.2 DISPLAY PROPERTIES 5-24
5.2.3 CLEAR RELAY RECORDS 5-25
5.2.4 COMMUNICATIONS 5-26
5.2.5 MODBUS USER MAP 5-63
5.2.6 REAL TIME CLOCK 5-63
5.2.7 USER-PROGRAMMABLE FAULT REPORTS 5-68
5.2.8 OSCILLOGRAPHY 5-69
5.2.9 DATA LOGGER 5-72
5.2.10 USER-PROGRAMMABLE LEDS 5-73
5.2.11 USER-PROGRAMMABLE SELF TESTS 5-76
5.2.12 CONTROL PUSHBUTTONS 5-78
5.2.13 USER-PROGRAMMABLE PUSHBUTTONS 5-80
5.2.14 FLEX STATE PARAMETERS 5-84
5.2.15 USER-DEFINABLE DISPLAYS 5-85
5.2.16 DIRECT INPUTS AND OUTPUTS 5-87
5.2.17 INSTALLATION 5-95

5.3 REMOTE RESOURCES

5.3.1 REMOTE RESOURCES CONFIGURATION 5-96

5.4 SYSTEM SETUP

5.4.1 AC INPUTS 5-97
5.4.2 POWER SYSTEM 5-98
5.4.3 SIGNAL SOURCES 5-100
5.4.4 BREAKERS 5-103
5.4.5 DISCONNECT SWITCHES 5-107
5.4.6 FLEXCURVES 5-110

5.5 FLEXLOGIC

5.5.1 INTRODUCTION TO FLEXLOGIC 5-118
5.5.2 FLEXLOGIC RULES 5-130
5.5.3 FLEXLOGIC EVALUATION 5-131
5.5.4 FLEXLOGIC EXAMPLE 5-131
5.5.5 FLEXLOGIC EQUATION EDITOR 5-136
5.5.6 FLEXLOGIC TIMERS 5-136
5.5.7 FLEXELEMENTS 5-137
5.5.8 NON-VOLATILE LATCHES 5-142

5.6 GROUPED ELEMENTS

5.6.1 OVERVIEW 5-143
5.6.2 SETTING GROUP 5-143
5.6.3 PHASE CURRENT 5-144
5.6.4 NEUTRAL CURRENT 5-160
5.6.5 GROUND CURRENT 5-173
5.6.6 NEGATIVE SEQUENCE CURRENT 5-175
5.6.7 BREAKER FAILURE (ANSI 50BF) 5-182
5.6.8 VOLTAGE ELEMENTS 5-191

5.7 CONTROL ELEMENTS

5.7.1 OVERVIEW 5-210
5.7.2 TRIP BUS 5-210
5.7.3 SETTING GROUPS 5-212
5.7.4 SELECTOR SWITCH 5-215
5.7.5 CAPACITOR CONTROL 5-221
5.7.6 TIME OF DAY TIMERS 5-226
5.7.7 AUTOMATIC VOLTAGE REGULATOR 5-227
5.7.8 DIGITAL ELEMENTS 5-232
5.7.9 DIGITAL COUNTERS 5-235
5.7.10 MONITORING ELEMENTS 5-237

5.8 INPUTS AND OUTPUTS

5.8.1 CONTACT INPUTS 5-250
5.8.2 VIRTUAL INPUTS 5-252
5.8.3 CONTACT OUTPUTS 5-253
5.8.4 VIRTUAL OUTPUTS 5-256
5.8.5 REMOTE DEVICES 5-256
5.8.6 REMOTE INPUTS 5-258
5.8.7 REMOTE DOUBLE-POINT STATUS INPUTS 5-259
5.8.8 REMOTE OUTPUTS 5-259
5.8.9 RESETTING 5-260
5.8.10 DIRECT INPUTS AND OUTPUTS 5-261
5.8.11 IEC 61850 GOOSE ANALOGS 5-264
5.8.12 IEC 61850 GOOSE INTEGERS 5-265

5.9 TRANSDUCER INPUTS AND OUTPUTS

5.9.1 DCMA INPUTS 5-266
5.9.2 RTD INPUTS 5-267
5.9.3 DCMA OUTPUTS 5-269

5.10 TESTING

5.10.1 TEST MODE 5-272
5.10.2 FORCE CONTACT INPUTS 5-273
5.10.3 FORCE CONTACT OUTPUTS 5-274

6. ACTUAL VALUES

6.1 OVERVIEW
6.1.1 ACTUAL VALUES MENU 6-1

6.2 STATUS
6.2.1 CONTACT INPUTS 6-3
6.2.2 VIRTUAL INPUTS 6-3
6.2.3 REMOTE INPUTS 6-3
6.2.4 REMOTE DOUBLE-POINT STATUS INPUTS 6-4
6.2.5 CONTACT OUTPUTS 6-4
6.2.6 VIRTUAL OUTPUTS 6-4
6.2.7 REMOTE DEVICES 6-5
6.2.8 DIGITAL COUNTERS 6-5
6.2.9 SELECTOR SWITCHES 6-6
6.2.10 FLEX STATES 6-6
6.2.11 TIME OF DAY TIMERS 6-6
6.2.12 ETHERNET 6-6
6.2.13 REAL TIME CLOCK SYNCHRONIZING 6-7
6.2.14 DIRECT INPUTS 6-8
6.2.15 DIRECT DEVICES STATUS 6-8
6.2.16 IEC 61850 GOOSE INTEGERS 6-9
6.2.17 REMAINING CONNECTION STATUS 6-9
6.2.18 PARALLEL REDUNDANCY PROTOCOL (PRP) STATUS 6-9

6.3 METERING
6.3.1 METERING CONVENTIONS 6-11
6.3.2 SOURCES 6-14
6.3.3 TRACKING FREQUENCY 6-19
6.3.4 FLEXELEMENTS 6-19
6.3.5 CAPACITOR CONTROL 6-19
6.3.6 CAPACITOR BANK 6-20
6.3.7 IEC 61580 GOOSE ANALOG VALUES 6-21
6.3.8 TRANSDUCER INPUTS/OUTPUTS 6-21

6.4 REMOTE RESOURCES
6.4.1 FIELD UNIT 6-22

6.5 RECORDS
6.5.1 USER PROGRAMMABLE FAULT REPORTS 6-23
6.5.2 EVENT RECORDS 6-23
6.5.3 OSCILLOGRAPHY 6-23
6.5.4 DATA LOGGER 6-24

6.6 PRODUCT INFORMATION
6.6.1 MODEL INFORMATION 6-25
6.6.2 FIRMWARE REVISIONS 6-25

7. COMMANDS AND TARGETS

7.1 COMMANDS
7.1.1 COMMANDS MENU 7-1
7.1.2 VIRTUAL INPUTS 7-2
7.1.3 CLEAR RECORDS 7-2
7.1.4 SET DATE AND TIME 7-2
7.1.5 RELAY MAINTENANCE 7-3
7.1.6 CAPACITOR BANK AUTOMATIC SETTINGS 7-4
7.1.7 SECURITY 7-8

7.2 TARGETS
7.2.1 TARGETS MENU 7-9
7.2.2 TARGET MESSAGES 7-9
7.2.3 RELAY SELF-TESTS 7-9

8. THEORY OF OPERATION

8.1 OVERVIEW
8.1.1 GENERAL OPERATION 8-1
8.1.2 BANK PHASE OVERVOLTAGE (ANSI 59B) 8-1
8.1.3 VOLTAGE DIFFERENTIAL (ANSI 87V) 8-3

8.1.4 COMPENSATED BANK NEUTRAL VOLTAGE UNBALANCE (ANSI 59NU) 8-6
8.1.5 PHASE CURRENT UNBALANCE (ANSI 60P) 8-10
8.1.6 NEUTRAL CURRENT UNBALANCE (ANSI 60N) 8-13

9. APPLICATION OF SETTINGS

9.1 ARRANGEMENT OF SHUNT CAPACITOR BANKS
9.1.1 OVERVIEW 9-1
9.1.2 EXTERNALLY FUSED CAPACITORS 9-1
9.1.3 INTERNALLY FUSED CAPACITORS 9-1
9.1.4 FUSELESS CAPACITORS 9-2
9.1.5 UNFUSED CAPACITORS 9-2

9.2 CONNECTIONS OF SHUNT CAPACITOR BANKS
9.2.1 GROUNDED WYE-CONNECTED BANKS 9-3
9.2.2 UNGROUNDED WYE-CONNECTED BANKS 9-3
9.2.3 DELTA-CONNECTED BANKS 9-3
9.2.4 H-CONFIGURATION 9-3
9.2.5 TAPPED CONFIGURATION 9-3
9.2.6 SUMMARY 9-3

9.3 PROTECTION METHODS FOR CAPACITOR BANKS
9.3.1 DESCRIPTION 9-5
9.3.2 CAPACITOR UNBALANCE PROTECTION 9-5
9.3.3 PROTECTION FOR RACK FAULTS (ARC-OVER WITHIN CAPACITOR BANK) . 9-10
9.3.4 OVERVOLTAGE 9-10
9.3.5 OVERCURRENT 9-11
9.3.6 LOSS OF BUS VOLTAGE 9-11

9.4 SETTING EXAMPLE
9.4.1 DESCRIPTION 9-12
9.4.2 VT AND CT SETUP 9-12
9.4.3 SOURCE ASSIGNMENT 9-13
9.4.4 BANK UNBALANCE CALCULATIONS 9-14
9.4.5 BANK VOLTAGE DIFFERENTIAL SETTINGS 9-16
9.4.6 BANK PHASE CURRENT UNBALANCE SETTINGS 9-18
9.4.7 BANK PHASE OVERVOLTAGE SETTINGS 9-19
9.4.8 BANK PHASE UNDERVOLTAGE SETTINGS 9-20
9.4.9 BANK OVERCURRENT PROTECTION 9-21

10. MAINTENANCE

10.1 MODULES
10.1.1 REPLACE A MODULE 10-1

10.2 BATTERIES
10.2.1 REPLACE BATTERY 10-3
10.2.2 DISPOSE OF BATTERY 10-5

10.3 UNINSTALL AND CLEAR FILES AND DATA
10.3.1 UNINSTALL AND CLEAR FILES AND DATA 10-8

10.4 REPAIRS
10.4.1 REPAIRS 10-9

10.5 STORAGE
10.5.1 STORAGE 10-10

10.6 DISPOSAL
10.6.1 DISPOSAL 10-11

A. FLEXANALOG AND FLEXINTEGER PARAMETERS

A.1 PARAMETER LISTS
A.1.1 FLEXANALOG ITEMS A-1
A.1.2 FLEXINTEGER ITEMS A-34

B. MODBUS COMMUNICATIONS

B.1 MODBUS RTU PROTOCOL

B.1.1 INTRODUCTION B-1
B.1.2 PHYSICAL LAYER B-1
B.1.3 DATA LINK LAYER B-1
B.1.4 MODBUS RTU CRC-16 ALGORITHM B-2

B.2 MODBUS FUNCTION CODES

B.2.1 SUPPORTED FUNCTION CODES B-4
B.2.2 READ ACTUAL VALUES OR SETTINGS (FUNCTION CODE 03/04H) B-4
B.2.3 EXECUTE OPERATION (FUNCTION CODE 05H) B-5
B.2.4 STORE SINGLE SETTING (FUNCTION CODE 06H) B-5
B.2.5 STORE MULTIPLE SETTINGS (FUNCTION CODE 10H) B-6
B.2.6 EXCEPTION RESPONSES B-6

B.3 FILE TRANSFERS

B.3.1 OBTAINING RELAY FILES VIA MODBUS B-7

B.4 MEMORY MAPPING

B.4.1 MODBUS MEMORY MAP B-9
B.4.2 DATA FORMATS B-74

C. IEC 61850 COMMUNICATIONS

C.1 OVERVIEW

C.1.1 INTRODUCTION C-1
C.1.2 COMMUNICATION PROFILES C-1
C.1.3 FILE TRANSFER BY IEC 61850 ..... C-2

C.2 SERVER DATA ORGANIZATION

C.2.1 OVERVIEW C-3
C.2.2 GGIO1: DIGITAL STATUS VALUES C-3
C.2.3 GGIO2: DIGITAL CONTROL VALUES C-3
C.2.4 GGIO3: DIGITAL STATUS AND ANALOG VALUES FROM GOOSE DATA C-3
C.2.5 GGIO4: GENERIC ANALOG MEASURED VALUES C-3
C.2.6 MMXU: ANALOG MEASURED VALUES C-4
C.2.7 PROTECTION AND OTHER LOGICAL NODES C-4

C.3 SERVER FEATURES AND CONFIGURATION

C.3.1 BUFFERED/UNBUFFERED REPORTING C-6
C.3.2 FILE TRANSFER C-6
C.3.3 TIMESTAMPS AND SCANNING C-6
C.3.4 LOGICAL DEVICE NAME C-6
C.3.5 LOCATION C-6
C.3.6 LOGICAL NODE NAME PREFIXES C-7
C.3.7 CONNECTION TIMING C-7
C.3.8 NON-IEC 61850 DATA C-7
C.3.9 COMMUNICATION SOFTWARE UTILITIES C-7

C.4 GENERIC SUBSTATION EVENT SERVICES: GSSE AND GOOSE

C.4.1 OVERVIEW C-8
C.4.2 GSSE CONFIGURATION C-8
C.4.3 FIXED GOOSE C-8
C.4.4 CONFIGURABLE GOOSE C-8
C.4.5 ETHERNET MAC ADDRESS FOR GSSE/GOOSE C-11
C.4.6 GSSE ID AND GOOSE ID SETTINGS C-11

C.5 IEC 61850 IMPLEMENTATION VIA ENERVISTA UR SETUP

C.5.1 OVERVIEW C-12
C.5.2 CONFIGURING IEC 61850 SETTINGS C-13
C.5.3 ABOUT ICD FILES C-14
C.5.4 CREATING AN ICD FILE WITH ENERVISTA UR SETUP C-18
C.5.5 ABOUT SCD FILES C-18
C.5.6 IMPORTING AN SCD FILE WITH ENERVISTA UR SETUP C-22

C.6 ACSI CONFORMANCE

C.6.1 ACSI BASIC CONFORMANCE STATEMENT C-24
C.6.2 ACSI MODELS CONFORMANCE STATEMENT C-24
C.6.3 ACSI SERVICES CONFORMANCE STATEMENT C-25

C.7 LOGICAL NODES

C.7.1 LOGICAL NODES TABLE C-28

D. IEC 60870-5-103 COMMUNICATIONS

D.1 IEC 60870-5-103
D.1.1 OVERVIEW D-1
D.1.2 FACTOR AND OFFSET CALCULATION TO TRANSMIT MEASURAND D-1
D.1.3 INTEROPERABILITY DOCUMENT D-2

E. IEC 60870-5-104 COMMUNICATIONS

E.1 OVERVIEW
E.1.1 INTEROPERABILITY DOCUMENT E-1
E.1.2 POINT LIST E-9

F. DNP COMMUNICATIONS

F.1 DEVICE PROFILE DOCUMENT
F.1.1 DNP V3.00 DEVICE PROFILE F-1
F.1.2 IMPLEMENTATION TABLE F-4

F.2 DNP POINT LISTS
F.2.1 BINARY INPUT POINTS F-8
F.2.2 BINARY AND CONTROL RELAY OUTPUT F-9
F.2.3 COUNTERS F-10
F.2.4 ANALOG INPUTS F-11

G. RADIUS SERVER

G.1 RADIUS SERVER CONFIGURATION
G.1.1 RADIUS SERVER CONFIGURATION G-1

H. MISCELLANEOUS

H.1 CHANGE NOTES
H.1.1 REVISION HISTORY H-1
H.1.2 CHANGES TO THE C70 MANUAL H-1

H.2 ABBREVIATIONS
H.2.1 STANDARD ABBREVIATIONS H-4

H.3 WARRANTY
H.3.1 GE MULTILIN WARRANTY H-7

Use this chapter for initial setup of your new C70 Capacitor Bank Protection and Control System.

1.1.1 CAUTIONS AND WARNINGS

Before attempting to install or use the device, review all safety indicators in this document to help prevent injury, equipment damage, or downtime.

The following safety and equipment symbols are used in this document.

DANGER **Indicates a hazardous situation which, if not avoided, will result in death or serious injury.**

WARNING **Indicates a hazardous situation which, if not avoided, could result in death or serious injury.**

CAUTION **Indicates a hazardous situation which, if not avoided, could result in minor or moderate injury.**

NOTICE Indicates practices not related to personal injury.

a) GENERAL CAUTIONS AND WARNINGS

The following general safety precautions and warnings apply.

DANGER **Ensure that all connections to the product are correct so as to avoid accidental risk of shock and/or fire, for example such as can arise from high voltage connected to low voltage terminals.**

Follow the requirements of this manual, including adequate wiring size and type, terminal torque settings, voltage, current magnitudes applied, and adequate isolation/clearance in external wiring from high to low voltage circuits.

Use the device only for its intended purpose and application.

Ensure that all ground paths are uncompromised for safety purposes during device operation and service.

Ensure that the control power applied to the device, the AC current, and voltage input match the ratings specified on the relay nameplate. Do not apply current or voltage in excess of the specified limits.

Only qualified personnel are to operate the device. Such personnel must be thoroughly familiar with all safety cautions and warnings in this manual and with applicable country, regional, utility, and plant safety regulations.

Hazardous voltages can exist in the power supply and at the device connection to current transformers, voltage transformers, control, and test circuit terminals. Make sure all sources of such voltages are isolated prior to attempting work on the device.

Hazardous voltages can exist when opening the secondary circuits of live current transformers. Make sure that current transformer secondary circuits are shorted out before making or removing any connection to the current transformer (CT) input terminals of the device.

For tests with secondary test equipment, ensure that no other sources of voltages or currents are connected to such equipment and that trip and close commands to the circuit breakers or other switching apparatus are isolated, unless this is required by the test procedure and is specified by appropriate utility/plant procedure.

When the device is used to control primary equipment, such as circuit breakers, isolators, and other switching apparatus, all control circuits from the device to the primary equipment must be isolated while personnel are working on or around this primary equipment to prevent any inadvertent command from this device.

Use an external disconnect to isolate the mains voltage supply.

Personal safety can be affected if the product is physically modified by the end user. Modifications to the product outside of recommended wiring configuration, hardware, or programming boundaries is not recommended end-use practice. Product disassembly and repairs are not permitted. All service needs to be conducted by the factory.

CAUTION **LED transmitters are classified as IEC 60825-1 Accessible Emission Limit (AEL) Class 1M. Class 1M devices are considered safe to the unaided eye. Do not view directly with optical instruments.**

1

NOTICE This product is rated to Class A emissions levels and is to be used in Utility, Substation Industrial environments. Not to be used near electronic devices rated for Class B levels.

1.1.2 INSPECTION PROCEDURE

1. Open the relay packaging and inspect the unit for physical damage.
2. View the rear nameplate and verify that the correct model has been ordered and delivered. The model number is at the top right.

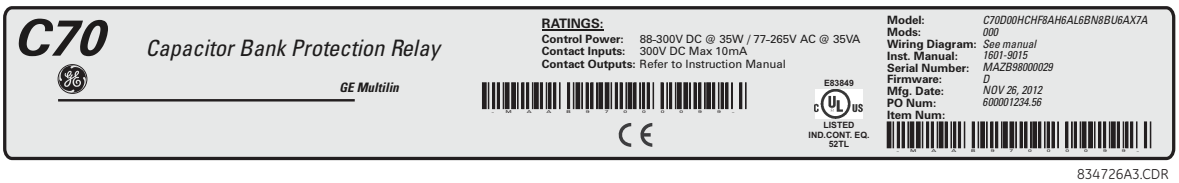

Figure 1–1: REAR NAMEPLATE (EXAMPLE)

3. Ensure that the following items are included:
   - Instruction manual (if ordered)
   - GE EnerVista™ DVD (includes the EnerVista UR Setup software and manuals in PDF format)
   - Mounting screws
4. If there is any noticeable physical damage, or any of the contents listed are missing, contact GE Grid Solutions as follows.

GE GRID SOLUTIONS CONTACT INFORMATION AND CALL CENTER FOR PRODUCT SUPPORT:

GE Grid Solutions
650 Markland Street
Markham, Ontario
Canada L6C 0M1

TELEPHONE: Worldwide +1 905 927 7070
Europe/Middle East/Africa +34 94 485 88 54
North America toll-free 1 800 547 8629
FAX: +1 905 927 5098
E-MAIL: Worldwide multilin.tech@ge.com
Europe multilin.tech.euro@ge.com
HOME PAGE: http://www.gegridsolutions.com/multilin

For updates to the instruction manual, firmware, and software, visit the GE Grid Solutions website.

1.2.1 INTRODUCTION TO THE UR

The GE Universal Relay (UR) series is a new generation of digital, modular, and multifunction equipment that is easily incorporated into automation systems, at both the station and enterprise levels.

1.2.2 HARDWARE ARCHITECTURE

a) UR BASIC DESIGN

The UR is a digital-based device containing a central processing unit (CPU) that handles multiple types of input and output signals. The UR device can communicate over a local area network (LAN) with an operator interface, a programming device, or another UR device.

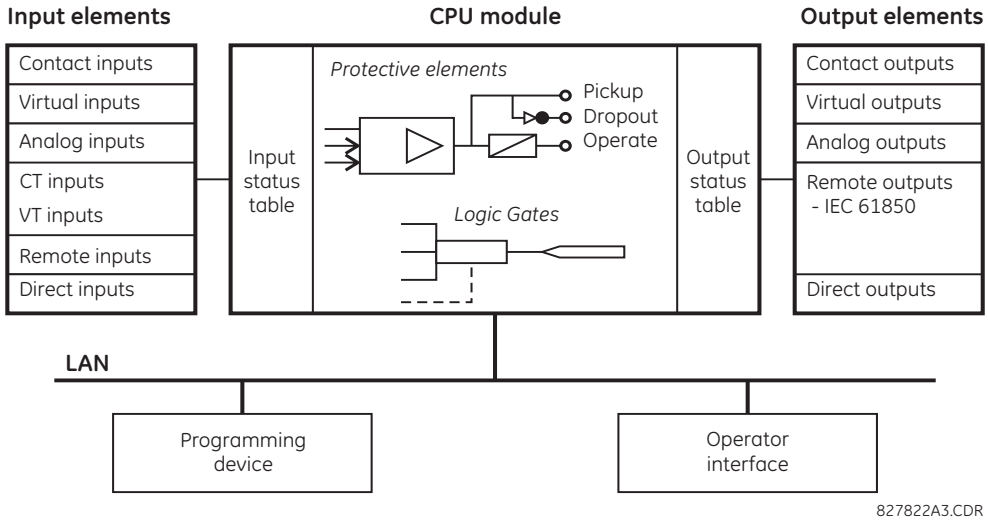

Figure 1–2: UR BLOCK DIAGRAM

The **CPU module** contains firmware that provides protection elements in the form of logic algorithms, as well as programmable logic gates, timers, and latches for control features.

Input elements accept a variety of analog or digital signals from the field. The UR isolates and converts these signals into logic signals used by the relay.

Output elements convert and isolate the logic signals generated by the relay into digital or analog signals that are used to control field devices.

The unit and software are backwards-compatible with UR devices.

b) UR SIGNAL TYPES

The **contact inputs and outputs** are digital signals associated with connections to hard-wired contacts. Both 'wet' and 'dry' contacts are supported.

The **virtual inputs and outputs** are digital signals associated with UR-series internal logic signals. Virtual inputs include signals generated by the local user interface. The virtual outputs are outputs of FlexLogic™ equations used to customize the device. Virtual outputs can also serve as virtual inputs to FlexLogic equations.

The **analog inputs and outputs** are signals that are associated with transducers, such as Resistance Temperature Detectors (RTDs).

The **CT and VT inputs** are analog current transformer and voltage transformer signals used to monitor AC power lines. The UR-series relays support 1 A and 5 A CTs.

The **remote inputs and outputs** provide a means of sharing digital point state information between remote UR-series devices. The remote outputs interface to the remote inputs of other UR-series devices. Remote outputs are FlexLogic operands inserted into IEC 61850 GSSE and GOOSE messages.

The **direct inputs and outputs** provide a means of sharing digital point states between a number of UR-series intelligent electronic devices (IEDs) over dedicated fiber, RS422, or G.703 interface. No switching equipment is required as the IEDs are connected directly in a ring or redundant (dual) ring configuration. This feature is optimized for speed and intended for pilot-aided schemes, distributed logic applications, or the extension of the input/output capabilities of a single relay chassis.

1.2.3 SOFTWARE ARCHITECTURE

Firmware is the software embedded in the relay in functional modules that can be installed in any relay as required. This is achieved with object-oriented design and programming (OOD/OOP) techniques.

Object-oriented techniques involve the use of *objects* and *classes*. An object is defined as "a logical entity that contains both data and code that manipulates data." A class is the generalized form of similar objects. By using this approach, one can create a protection class with the protection elements as objects of the class, such as time overcurrent, instantaneous overcurrent, current differential, undervoltage, overvoltage, underfrequency, and distance. These objects represent completely self-contained software modules. The same object-class concept can be used for metering, input/output control, software interface, communications, or any functional entity in the system.

Employing OOD/OOP in the software architecture of the C70 achieves the same features as the hardware architecture: modularity, scalability, and flexibility. The application software for any UR-series device (for example, feeder protection, transformer protection, distance protection) is constructed by combining objects from the various functional classes. This results in a common interface across the UR series.

1.3.1 SYSTEM REQUIREMENTS

The relay front panel or the EnerVista UR Setup software can be used to communicate with the relay. The software interface is the preferred method to edit settings and view actual values because the computer monitor can display more information.

The minimum system requirements for the EnerVista UR Setup software are as follows:

- Pentium 4 (Core Duo recommended)
- Windows XP with Service Pack 2 (Service Pack 3 recommended), Windows 7, or Windows Server 2008 Release 2 64-bit
- 1 GB of RAM (2 GB recommended)
- 500 MB free hard drive space (1 GB recommended)
- 1024 x 768 display (1280 x 800 recommended)
- Serial port
- Ethernet port of the same type as one of the UR CPU ports or a LAN connection to the UR
- Internet access or a DVD drive

The following qualified modems have been tested to be compatible with the C70 and the EnerVista UR Setup software:

- US Robotics external 56K FaxModem 5686
- US Robotics external Sportster 56K X2
- PCTEL 2304WT V.92 MDC internal modem

1.3.2 INSTALLATION

After ensuring that the requirements for using EnerVista UR Setup software are met, install the software from the GE EnerVista DVD. Or download the UR EnerVista software from http://www.gegridsolutions.com/multilin and install it.

To install the UR EnerVista software from the DVD:

1. Insert the GE EnerVista DVD into the DVD drive of your computer.
2. Click the **Install Now** button and follow the instructions.
3. When installation is complete, start the EnerVista Launchpad application.
4. Click the **IED Setup** section of the **Launch Pad** window.

Figure 1–3: ADDING A UR DEVICE IN LAUNCHPAD WINDOW

5. In the EnerVista Launch Pad window, click the **Add Product** button and select the appropriate product as follows. Select the **Web** option to ensure the most recent software release, or select **CD** if you do not have an Internet connec-

tion, then click the **Add Now** button to list software items for the product. EnerVista Launchpad obtains the software from the Internet or DVD and automatically starts the installation program.

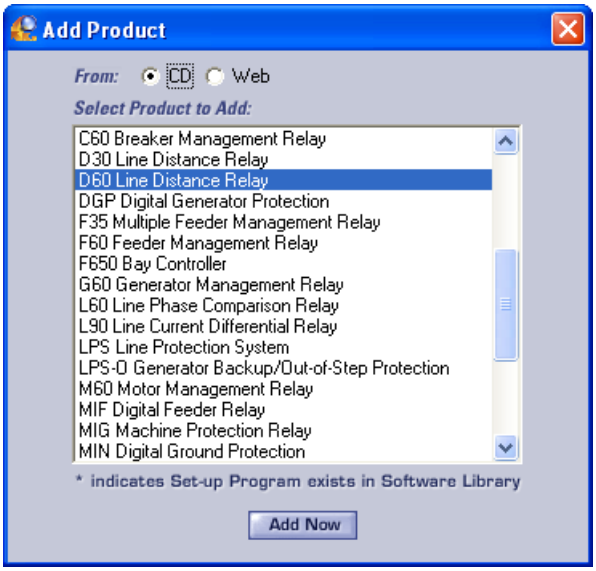

Figure 1–4: IDENTIFYING THE UR DEVICE TYPE

6. Select the complete path, including the new directory name, where the EnerVista UR Setup software is to be installed.
7. Click the **Next** button to begin the installation. The files are installed in the directory indicated, and the installation program automatically creates icons and adds an entry to the Windows start menu.
8. Click **Finish** to complete the installation. The UR device is added to the list of installed intelligent electronic devices (IEDs) in the EnerVista Launchpad window, as shown.

Figure 1–5: UR DEVICE ADDED TO LAUNCHPAD WINDOW

1.3.3 CONFIGURING THE C70 FOR SOFTWARE ACCESS

a) OVERVIEW

You connect remotely to the C70 through the rear RS485 or Ethernet port with a computer running the EnerVista UR Setup software. The C70 can also be accessed locally with a computer through the front panel RS232 port or the rear Ethernet port using the Quick Connect feature.

- To configure the C70 for remote access via the rear RS485 port, see the Configuring Serial Communications section.
- To configure the C70 for remote access via the rear Ethernet port, see the Configuring Ethernet Communications section.
- To configure the C70 for local access with a computer through either the front RS232 port or rear Ethernet port, see the Using the Quick Connect Feature section.

Implement IP addresses for the computer and a C70 device as follows.

The UR family supports the use of subnetworks as documented in RFC 950, which divides class-based networks into sub-networks (non-CIDR). The classes and IP address ranges are defined as follows.

Table 1–1: IP ADDRESS CLASSES

CLASSES	IP ADDRESS RANGE	DEFAULT SUBNET MASK ADDRESS	UR DEVICES
A	1.0.0.0 to 127.255.255.255	255.0.0.0	65,535 or more
B	128.0.0.0 to 191.255.255.255	255.255.0.0	255 to 65,534
C	192.0.0.0 to 223.255.255.255	255.255.255.0	0 to 254
D	224.0.0.0 to 239.255.255.255	(Reserved for multicasting)	
E	240.0.0.0 to 255.255.255.255	(Reserved)	

Both network and subnet addresses are contained within a range. The number of hosts determines the class and addresses as follows:

- Class A 255.0.0.0 — The first octet (255) specifies the network, the second to fourth octets (0) specify the subnet and host. Use this class when you have more than 65,535 hosts (UR devices).
- Class B 255.255.0.0 — The first two octets (255) specify the network, the third octet (0) specifies the subnet, and the fourth octet (0) specifies the host. Use this class when you have 255 to 65,534 hosts (UR devices).
- Class C 255.255.255.0 — The first three octets (255) specify the network and the last octet (0) specifies the subnet and host. Use this class when you have up to 254 hosts (UR devices).

An example of implementation is one computer and one UR device. Because there is one UR device, class C addressing is required. So we use UR 192.167.2.x with subnet mask 255.255.255.0 and computer 192.167.3.x with subnet mask 255.255.255.0.

For older, non-CIDR routing protocols, such as RIP version 1, follow these restrictions:

- Identical subnet masks — Use a single mask for all subnets within a network
- Contiguous subnets — The subnets must be contiguous and not split among networks. The subnets cannot pass traffic through other networks.

b) CONFIGURING SERIAL COMMUNICATIONS

A computer with an RS232 port and a serial cable is required. To use the RS485 port at the back of the relay, a GE Multilin F485 converter (or compatible RS232-to-RS485 converter) is required. See the F485 instruction manual for details.

1. Connect the computer to the F485 and the F485 to the RS485 terminal on the back of the UR device, or connect the computer to the RS232 port on the front of the relay.
2. In the EnerVista Launchpad software on the computer, select the UR device to start the software.
3. Click the **Device Setup** button to open the Device Setup window, and click the **Add Site** button to define a new site.
4. Enter a site name in the **Site Name** field. Optionally add a short description of the site along with the display order of devices defined for the site. This example uses “Location 1” as the site name. When done, click the **OK** button. The new site appears in the upper-left list in the EnerVista UR Setup window.
5. Click the **Device Setup** button, then select the new site to re-open the Device Setup window.
6. Click the **Add Device** button to define the new device.
7. Enter a name in the "Device Name” field and a description (optional) of the site.

8. Select “Serial” from the **Interface** drop-down list. This displays a number of interface parameters that must be entered for serial communications.

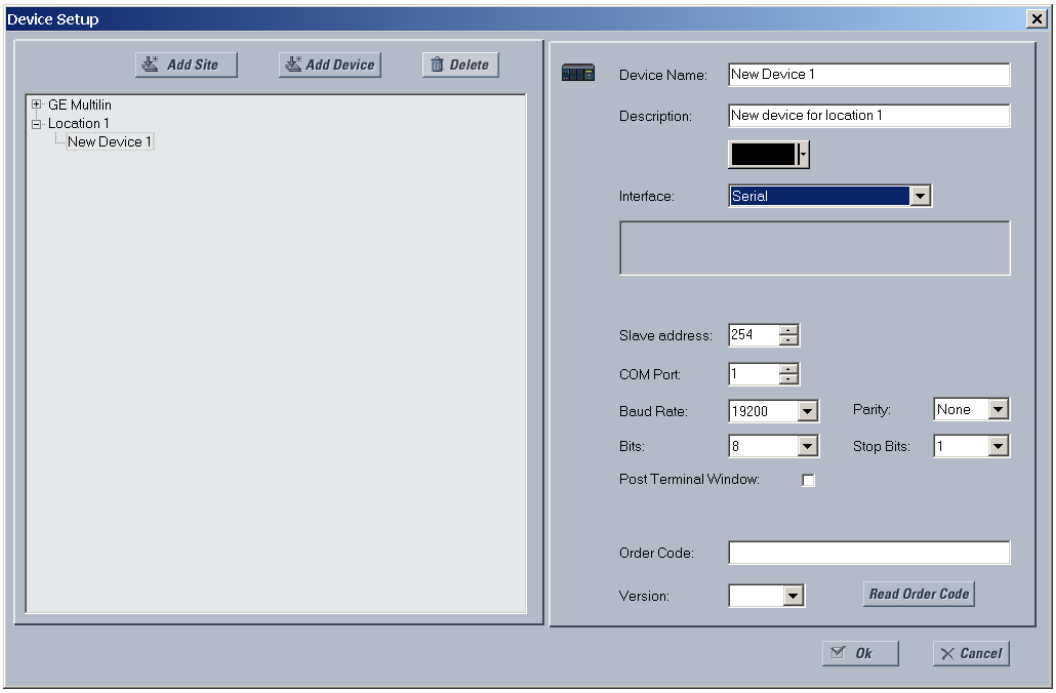

Figure 1–6: CONFIGURING SERIAL COMMUNICATIONS

9. Enter the COM port used by the computer, the baud rate, and parity settings from the front panel **SETTINGS** ⇨ **PRODUCT SETUP** ⇨⇩ **COMMUNICATIONS** ⇨ **SERIAL PORTS** menu, and the relay slave address setting from the front panel **SETTINGS** ⇨ **PRODUCT SETUP** ⇨⇩ **COMMUNICATIONS** ⇨⇩ **MODBUS PROTOCOL** ⇨ **MODBUS SLAVE ADDRESS** menu in their respective fields.
10. Click the **Read Order Code** button to connect to the C70 device and upload the order code. If a communications error occurs, ensure that the EnerVista UR Setup serial communications values entered in the previous step correspond to the relay setting values.
11. Click the **OK** button when the relay order code has been received. The new device is added to the Site List window (or Online window) located in the top left corner of the main EnerVista UR Setup window.

The device has now been configured for RS232 communications. Proceed to the Connecting to the C70 section to begin communication.

c) CONFIGURING ETHERNET COMMUNICATIONS

Before starting, verify that the Ethernet network cable is properly connected to the Ethernet port on the back of the relay. To setup the relay for Ethernet communications, you define a Site, then add the relay as a Device at that site.The computer and UR device must be on the same subnet.

12. Select the “UR” device from the EnerVista Launchpad to start EnerVista UR Setup.
13. Click the **Device Setup** button to open the Device Setup window, then click the **Add Site** button to define a new site.
14. Enter the desired site name in the “Site Name” field. If desired, a short description of site can also be entered along with the display order of devices defined for the site. In this example, we use “Location 2” as the site name. Click the **OK** button when complete.
15. The new site appears in the upper-left list in the EnerVista UR Setup window. Click the **Device Setup** button then select the new site to re-open the Device Setup window.
16. Click the **Add Device** button to define the new device.
17. Enter the desired name in the “Device Name” field and a description (optional) of the site.

18. Select “Ethernet” from the **Interface** drop-down list. This displays a number of interface parameters that must be entered for proper Ethernet functionality.

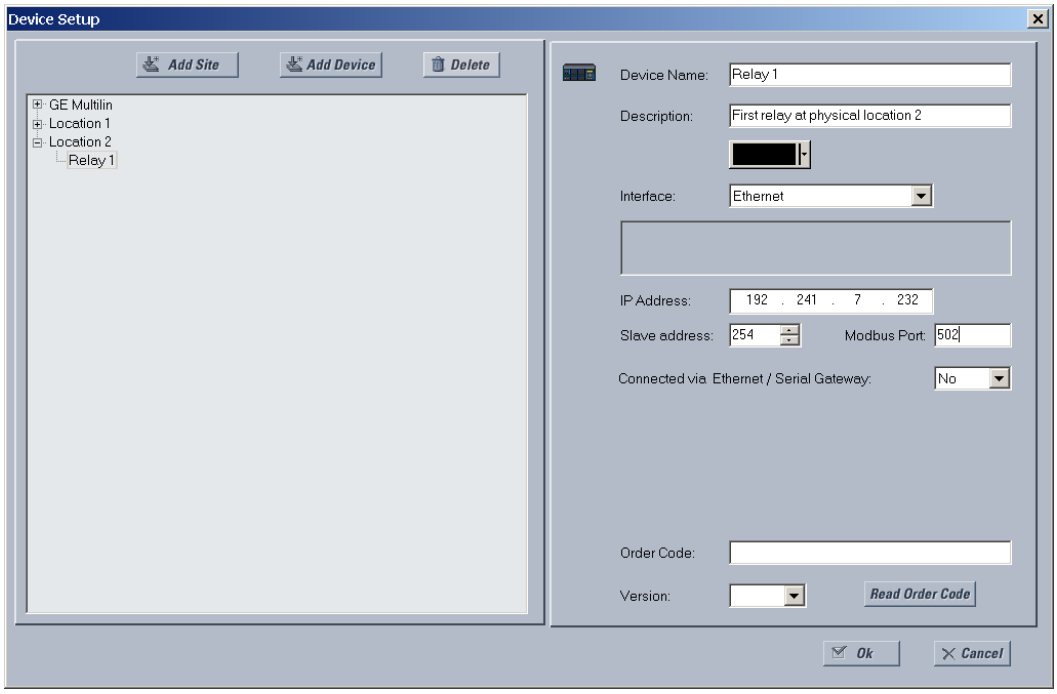

Figure 1–7: CONFIGURING ETHERNET COMMUNICATIONS

19. Enter the relay IP address specified in the front panel **SETTINGS** ⇨ **PRODUCT SETUP** ⇨⇩ **COMMUNICATIONS** ⇨⇩ **NETWORK** ⇨ **IP ADDRESS** in the “IP Address” field.
20. Enter the relay slave address and Modbus port address values from the respective settings in the front panel **SETTINGS** ⇨ **PRODUCT SETUP** ⇨⇩ **COMMUNICATIONS** ⇨⇩ **MODBUS PROTOCOL** menu.
21. Click the **Read Order Code** button to connect to the C70 device and upload the order code. If an communications error occurs, ensure that the three EnerVista UR Setup values entered in the previous steps correspond to the relay setting values.
22. Click **OK** when the relay order code has been received. The new device is added to the Site List window (or Online window) located in the top left corner of the main EnerVista UR Setup window.

The Site Device has now been configured for Ethernet communications. Proceed to the Connecting to the C70 section to begin communications.

1.3.4 USING THE QUICK CONNECT FEATURE

a) USING QUICK CONNECT VIA THE FRONT PANEL RS232 PORT

Before starting, verify that the serial cable is properly connected from the computer to the front panel RS232 port with a straight-through 9-pin to 9-pin RS232 cable.

1. Verify that the latest version of the EnerVista UR Setup software is installed (available from the GE EnerVista CD or online from http://www.gegridsolutions.com/multilin). See the Software Installation section if not already installed.
2. Select the “UR” device from the EnerVista Launchpad to start EnerVista UR Setup.

3. Click the **Quick Connect** button to open the Quick Connect dialog box.

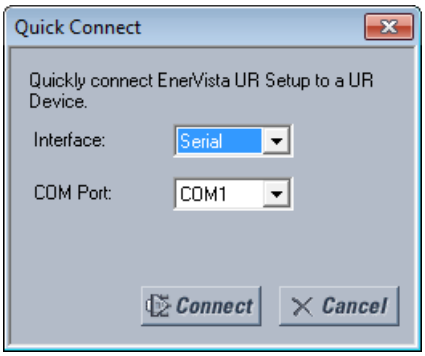

4. Select the **Serial** interface and the correct COM Port, then click **Connect**.
5. The EnerVista UR Setup software creates a site named "Quick Connect" with a corresponding device also named "Quick Connect" and displays them at the upper-left of the screen. Expand the sections to view data directly from the C70 device.

Each time that the EnerVista UR Setup software is initialized, click the **Quick Connect** button to establish direct communications to the C70 device. This ensures that configuration of the EnerVista UR Setup software matches the C70 model number.

b) USING QUICK CONNECT VIA THE REAR ETHERNET PORTS

To use the Quick Connect feature to access the C70 from a computer through Ethernet, first assign an IP address to the relay from the front panel keyboard.

1. Press the MENU key until the SETTINGS menu displays.
2. Navigate to the **SETTINGS** ⇨ **PRODUCT SETUP** ⇨⇩ **COMMUNICATIONS** ⇨⇩ **NETWORK** ⇨ **IP ADDRESS** setting.
3. Enter an IP address, for example "1.1.1.1," and select the ENTER key to save the value.
4. In the same menu, select the **SUBNET IP MASK** setting.
5. Enter a subnet IP address, for example "255.0.0.0," and press the ENTER key to save the value.

Next, use an Ethernet cross-over cable to connect the computer to the rear Ethernet port. In case you need it, the figure shows the pinout for an Ethernet cross-over cable.

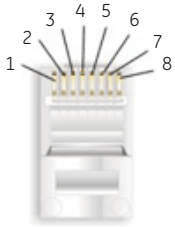

END 1		
Pin	Wire color	Diagram
1	White/orange	
2	Orange	
3	White/green	
4	Blue	
5	White/blue	
6	Green	
7	White/brown	
8	Brown	

END 2		
Pin	Wire color	Diagram
1	White/green	
2	Green	
3	White/orange	
4	Blue	
5	White/blue	
6	Orange	
7	White/brown	
8	Brown	

842799A1.CDR

Figure 1–8: ETHERNET CROSS-OVER CABLE PIN LAYOUT

Now, assign the computer an IP address compatible with the relay's IP address.

1. From the Windows desktop, right-click the **My Network Places** icon and select **Properties** to open the network connections window.

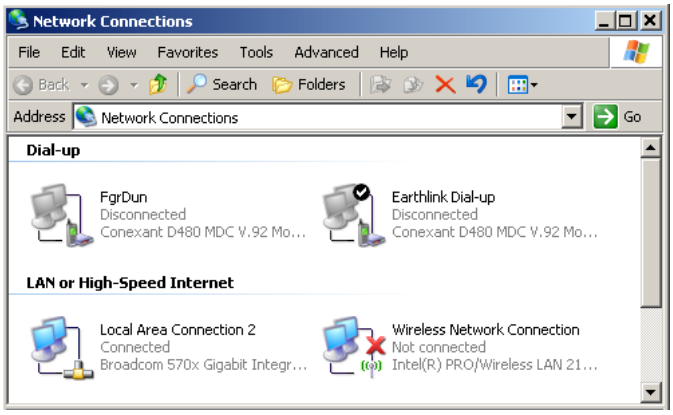

2. Right-click the **Local Area Connection** icon and select **Properties**.

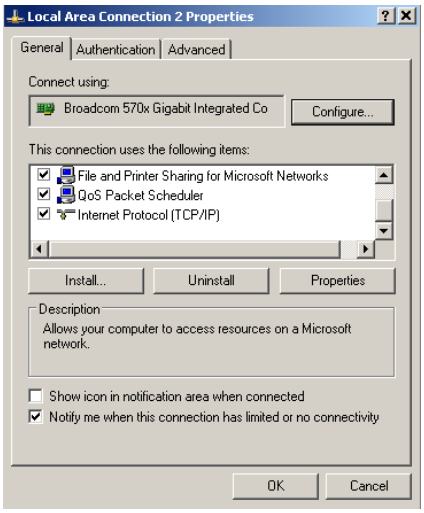

3. Select the **Internet Protocol (TCP/IP)** item from the list, and click the **Properties** button.

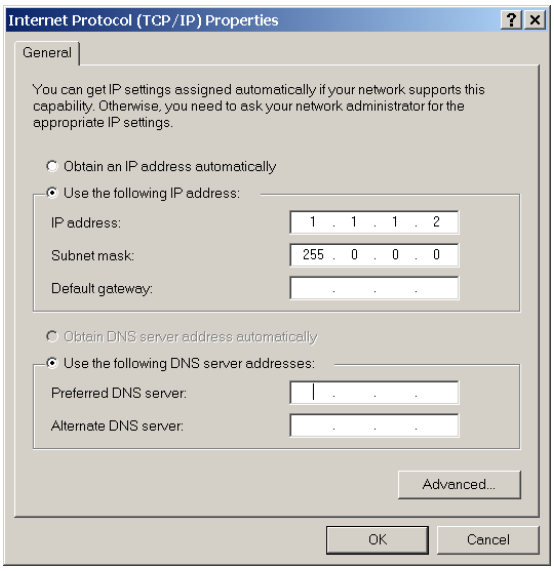

4. Click the “Use the following IP address” box.
5. Enter an **IP address** with the first three numbers the same as the IP address of the C70 relay and the last number different (in this example, 1.1.1.2).
6. Enter a subnet mask equal to the one set in the C70 (in this example, 255.0.0.0).
7. Click the **OK** button to save the values.

Before continuing, test the Ethernet connection.

1. Open a Windows console window by selecting **Start > Run** from the Windows **Start** menu and typing “cmd”.
2. Type the following command, substituting the IP address of 1.1.1.1 with yours:

```
C:\WINNT>ping 1.1.1.1
```

3. If the connection is successful, the system returns four replies similar to the following:

```
Pinging 1.1.1.1 with 32 bytes of data:

Reply from 1.1.1.1: bytes=32 time<10ms TTL=255
Reply from 1.1.1.1: bytes=32 time<10ms TTL=255
Reply from 1.1.1.1: bytes=32 time<10ms TTL=255
Reply from 1.1.1.1: bytes=32 time<10ms TTL=255

Ping statistics for 1.1.1.1:
    Packets: Sent = 4, Received = 4, Lost = 0 (0% loss),
Approximate round trip time in milliseconds:
    Minimum = 0ms, Maximum = 0ms, Average = 0 ms
```

4. Note that the values for `time` and `TTL` vary depending on local network configuration.
5. If the following sequence of messages appears when entering the `C:\WINNT>ping 1.1.1.1` command:

```
Pinging 1.1.1.1 with 32 bytes of data:

Request timed out.
Request timed out.
Request timed out.
Request timed out.

Ping statistics for 1.1.1.1:
    Packets: Sent = 4, Received = 0, Lost = 4 (100% loss),
Approximate round trip time in milliseconds:
    Minimum = 0ms, Maximum = 0ms, Average = 0 ms

Pinging 1.1.1.1 with 32 bytes of data:
```

verify the physical connection between the C70 and the computer, and double-check the programmed IP address in the **PRODUCT SETUP** ⇨⇩ **COMMUNICATIONS** ⇨⇩ **NETWORK** ⇨ **IP ADDRESS** setting, then repeat step 2.

6. If the following sequence of messages appears when entering the `C:\WINNT>ping 1.1.1.1` command:

```
Pinging 1.1.1.1 with 32 bytes of data:

Hardware error.
Hardware error.
Hardware error.
Hardware error.

Ping statistics for 1.1.1.1:
    Packets: Sent = 4, Received = 0, Lost = 4 (100% loss),
Approximate round trip time in milliseconds:
    Minimum = 0ms, Maximum = 0ms, Average = 0 ms

Pinging 1.1.1.1 with 32 bytes of data:
```

verify the physical connection between the C70 and the computer, and double-check the programmed IP address in the **PRODUCT SETUP** ⇨⇩ **COMMUNICATIONS** ⇨⇩ **NETWORK** ⇨ **IP ADDRESS** setting, then repeat step 2.

7. If the following sequence of messages appears when entering the `C:\WINNT>ping 1.1.1.1` command:

```
Pinging 1.1.1.1 with 32 bytes of data:

Destination host unreachable.
Destination host unreachable.
Destination host unreachable.
Destination host unreachable.

Ping statistics for 1.1.1.1:
    Packets: Sent = 4, Received = 0, Lost = 4 (100% loss),
Approximate round trip time in milliseconds:
    Minimum = 0ms, Maximum = 0ms, Average = 0 ms

Pinging 1.1.1.1 with 32 bytes of data:
```

verify the IP address is programmed in the local computer by entering the ipconfig command in the command window.

```
C:\WINNT>ipconfig

Windows IP Configuration

Ethernet adapter <F4FE223E-5EB6-4BFB-9E34-1BD7BE7F59FF>:

        Connection-specific DNS suffix. . :
        IP Address. . . . . . . . . . . . : 0.0.0.0
        Subnet Mask . . . . . . . . . . . : 0.0.0.0
        Default Gateway . . . . . . . . . :

Ethernet adapter Local Area Connection:

        Connection-specific DNS suffix  . :
        IP Address. . . . . . . . . . . . : 1.1.1.2
        Subnet Mask . . . . . . . . . . . : 255.0.0.0
        Default Gateway . . . . . . . . . :

C:\WINNT>
```

Before using the Quick Connect feature through the Ethernet port, disable any configured proxy settings in Internet Explorer.

1. Start the Internet Explorer software.
2. Select the **Tools > Internet Options** menu item and click the **Connections** tab.
3. Click on the **LAN Settings** button to open the following window.

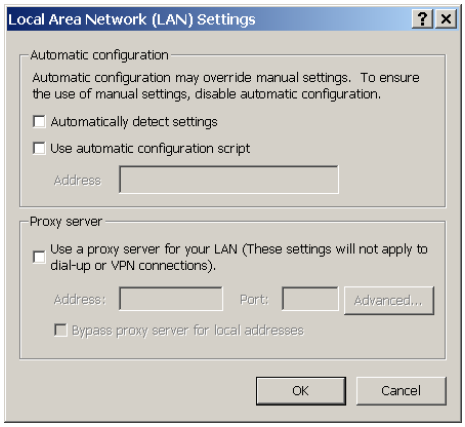

4. Ensure that the “Use a proxy server for your LAN” box is not checked.

If this computer is used to connect to the Internet, re-enable any proxy server settings after the computer has been disconnected from the C70 relay.

1. Start the Internet Explorer software.
2. Select the “UR” device from the EnerVista Launchpad to start EnerVista UR Setup.
3. Click the **Quick Connect** button to open the Quick Connect dialog box.

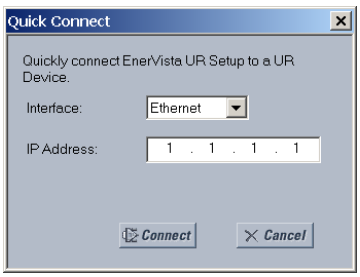

4. Select the **Ethernet** interface and enter the IP address assigned to the C70, then click the **Connect** button. The EnerVista UR Setup software creates a site named “Quick Connect” with a corresponding device also named “Quick Connect” and displays them at the upper-left of the screen.
5. Expand the sections to view data directly from the C70 device.

Each time the EnerVista UR Setup software is initialized, click the **Quick Connect** button to establish direct communications to the C70. This ensures that configuration of the EnerVista UR Setup software matches the C70 model number.

When direct communications with the C70 via Ethernet is complete, make the following changes:

1. From the Windows desktop, right-click the **My Network Places** icon and select **Properties** to open the network connections window.
2. Right-click the **Local Area Connection** icon and select the **Properties** item.
3. Select the **Internet Protocol (TCP/IP)** item from the list provided and click the **Properties** button.
4. Set the computer to “Obtain a relay address automatically” as shown.

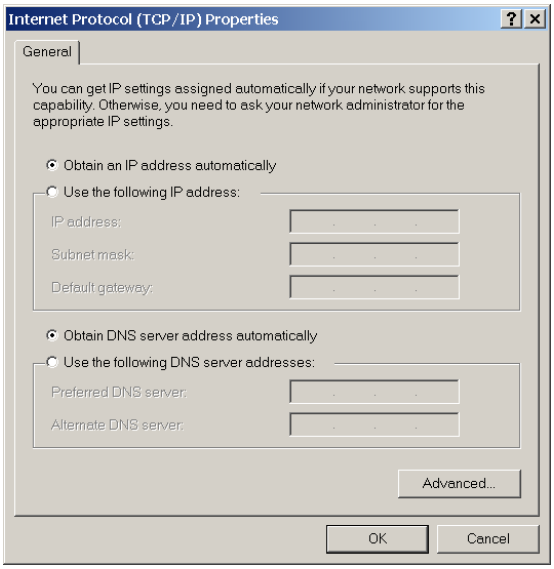

If this computer is used to connect to the Internet, re-enable any proxy server settings after the computer has been disconnected from the C70 relay.

AUTOMATIC DISCOVERY OF ETHERNET DEVICES

The EnerVista UR Setup software can automatically discover and communicate to all UR-series IEDs located on an Ethernet network.

Using the Quick Connect feature, a single click of the mouse triggers the software to automatically detect any UR-series relays located on the network. The EnerVista UR Setup software then proceeds to configure all settings and order code options in the **Device Setup** menu. This feature allows the user to identify and interrogate all UR-series devices at a location.

1.3.5 CONNECTING TO THE C70 RELAY

When unable to connect because of an "ACCESS VIOLATION," access **Device Setup** and refresh the order code for the device.

1. Open the Display Properties window through the Site List tree as shown. The Display Properties window opens with a status indicator on the lower left of the EnerVista UR Setup window.

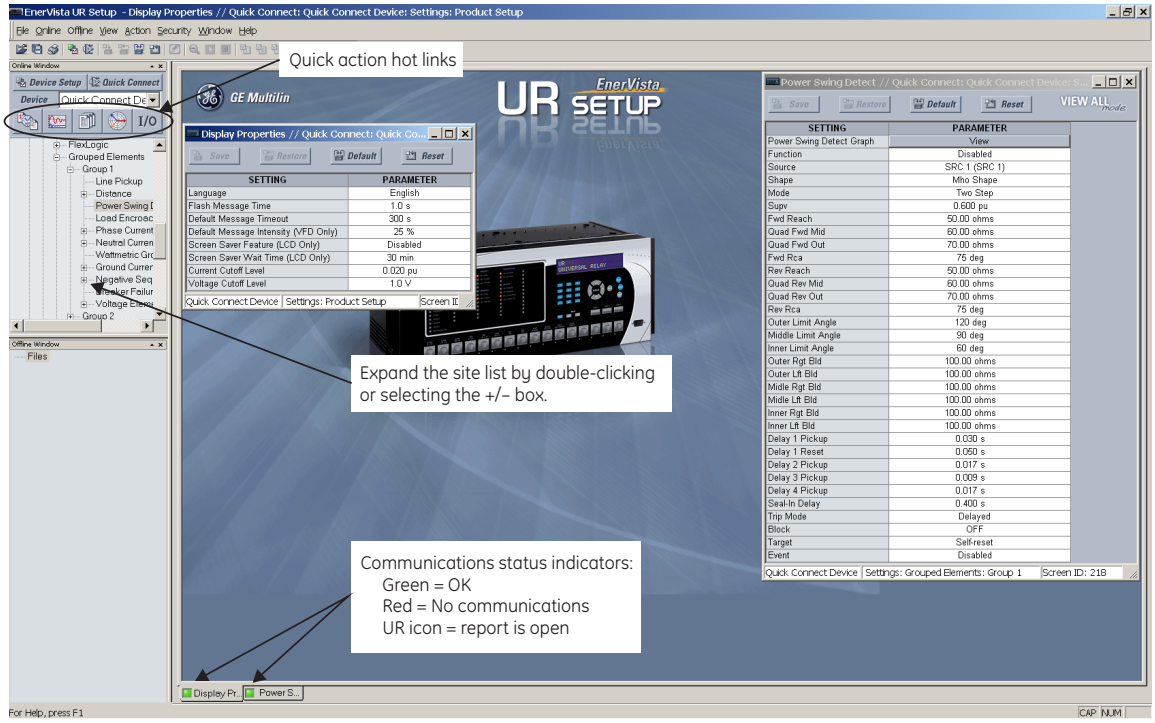

842743A3.CDR

2. If the status indicator is red, verify that the Ethernet network cable is properly connected to the Ethernet port on the back of the relay and that the relay has been properly setup for communications (steps A and B earlier).

   If a relay icon appears in place of the status indicator, than a report (such as an oscillography or event record) is open. Close the report to re-display the green status indicator.

3. The Display Properties settings can now be edited, printed, or changed.

NOTE

See chapter 4 in this manual or the EnerVista UR Setup Help File for information about the using the EnerVista UR Setup software interface.

QUICK ACTION HOT LINKS

The EnerVista UR Setup software has several quick action buttons to provide instant access to several functions that are often performed when using C70 relays. From the online window, users can select the relay to interrogate from a pull-down window, then click the button for the action they want to perform. The following quick action functions are available:

- View the C70 event record
- View the last recorded oscillography record
- View the status of all C70 inputs and outputs
- View all of the C70 metering values
- View the C70 protection summary
- Generate a service report

1.3.6 SETTING UP CYBERSENTRY AND CHANGING DEFAULT PASSWORD

If and when first using CyberSentry security, use the following procedure for set up.

1. Log in to the relay as Administrator by using the Value keys on the front panel or through EnerVista connected serially (so that no IP address is required). If logging in through EnerVista choose Device authentication. Enter the default password "ChangeMe1#". Note that the "Lock relay" setting needs to be disabled in the **Security > Supervisory** menu. When this setting is disabled, configuration and firmware upgrade are possible. By default, this setting is disabled.
2. Enable the Supervisor role if you have a need for it.
3. Make any required changes in configuration, such as setting a valid IP address for communication over Ethernet.
4. Log out of the Administrator account by choosing None.

Next, device or server authentication can be chosen on the login screen, but the choice is available only in EnerVista. Use device authentication to log in using the five pre-configured roles (Administrator, Supervisor, Engineer, Operator, Observer, or Administrator and Supervisor when device authentication is disabled). When using a serial connection, only device authentication is supported. When server authentication is required, characteristics for communication with a RADIUS server must be configured on the UR. This is possible only through the EnerVista software. The RADIUS server itself also must be configured. The appendix called RADIUS Server gives an example of how to setup a simple RADIUS server. Once both the RADIUS server and the parameters for connecting UR to the server have been configured, you can choose server authentication on the login screen of EnerVista.

Figure 1–9: LOGIN SCREEN FOR CYBERSENTRY

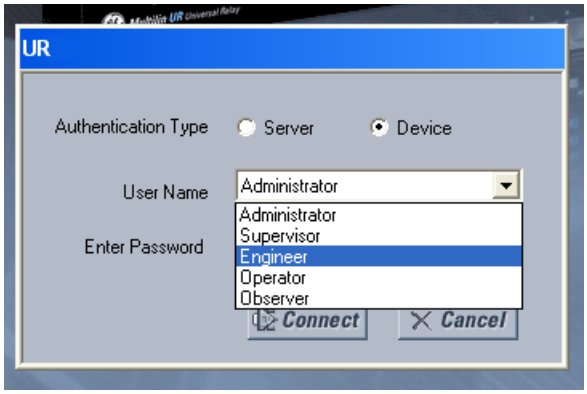

During the commissioning phase, you have the option to bypass the use of passwords. Do so by enabling the **BYPASS ACCESS** setting under **SETTINGS > PRODUCT SETUP > SECURITY > SUPERVISORY**. Be sure to disable this bypass setting after commissioning the device.

You can change the password for any role either from the front panel or through EnerVista.

If using EnerVista, navigate to **Settings > Product Setup > Security**. Change the **Local Administrator Password**, for example. It is strongly recommended that the password for the Administrator be changed from the default. Changing the passwords for the other three roles is optional.

1.4.1 MOUNTING AND WIRING

See Chapter 3: Hardware for mounting and wiring instructions.

1.4.2 COMMUNICATIONS

The EnerVista UR Setup software communicates to the relay via the faceplate RS232 port or the rear panel RS485 / Ethernet ports. To communicate via the faceplate RS232 port, a standard straight-through serial cable is used. The DB-9 male end is connected to the relay and the DB-9 or DB-25 female end is connected to the computer COM2 port as described in the CPU Communication Ports section of chapter 3.

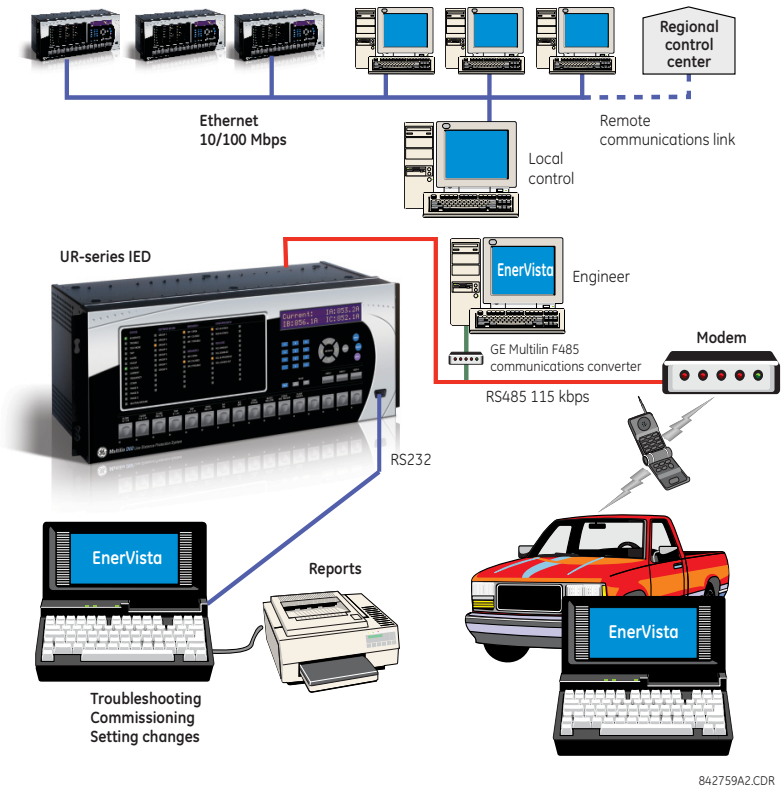

Figure 1–10: RELAY COMMUNICATION OPTIONS

To communicate through the C70 rear RS485 port from a computer RS232 port, the GE Multilin RS232/RS485 converter box is required. This device (catalog number F485) connects to the computer using a straight-through serial cable. A shielded twisted-pair (20, 22, or 24 AWG) connects the F485 converter to the C70 rear communications port. The converter terminals (+, –, GND) are connected to the C70 communication module (+, –, COM) terminals. See the CPU Communication Ports section in chapter 3 for details. The line is terminated with an R-C network (that is, 120 Ω, 1 nF) as described in the chapter 3.

1.4.3 FACEPLATE DISPLAY

All messages are displayed on a backlit liquid crystal display (LCD) to make them visible under poor lighting conditions. While the keypad and display are not actively being used, the display defaults to user-defined messages. Any high-priority event-driven message automatically overrides the default message and appears on the display.

Settings files conversion from previous firmware versions is supported.

1.5.1 FACEPLATE KEYPAD

Display messages are organized into pages under the following headings: actual values, settings, commands, and targets. The MENU key navigates through these pages. Each heading page is divided further into logical subgroups.

The MESSAGE keys navigate through the subgroups. The VALUE keys increment or decrement numerical setting values when in programming mode. These keys also scroll through alphanumeric values in the text edit mode. Alternatively, values can be entered with the numeric keypad.

The decimal key initiates and advances to the next character in text edit mode or enters a decimal point.

The HELP key can be pressed at any time for context-sensitive help messages.

The ENTER key stores altered setting values.

When entering an IP address on the front panel, key in the first sequence of the number, then press the • key for the decimal place. For example, for 127.0.0.1, press 127, then •, then 0, then •, then 0, then •, then 1. To save the address, press the ENTER key.

1.5.2 MENU NAVIGATION

Press the MENU key to select a header display page (top-level menu). The header title appears momentarily followed by a header display page menu item. Each press of the MENU key advances through the following main heading pages:

- Actual values
- Settings
- Commands
- Targets
- User displays (when enabled)

1.5.3 MENU HIERARCHY

The setting and actual value messages are arranged hierarchically. The header display pages are indicated by double scroll bar characters (■■), while sub-header pages are indicated by single scroll bar characters (■). The header display pages represent the highest level of the hierarchy and the sub-header display pages fall below this level. The MESSAGE UP and DOWN keys move within a group of headers, sub-headers, setting values, or actual values. Continually pressing the MESSAGE RIGHT key from a header display displays specific information for the header category. Conversely, continually pressing the MESSAGE LEFT key from a setting value or actual value display returns to the header display.

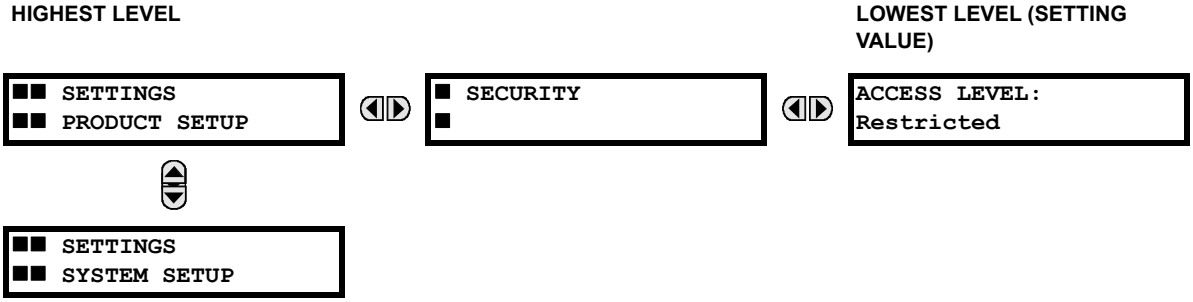

1.5.4 RELAY ACTIVATION

The relay is in the default “Not Programmed” state when it leaves the factory. When powered up successfully, the Trouble LED is on and the In Service LED off. The relay in the “Not Programmed” state blocks signaling of any output relay. These conditions remain until the relay is explicitly put in the “Programmed” state.

Select the menu message **SETTINGS ⇨ PRODUCT SETUP ⇨⇩ INSTALLATION ⇨ RELAY SETTINGS**

```
RELAY SETTINGS:
Not Programmed
```

1. To put the relay in the “Programmed” state, press either of the VALUE keys once and then press ENTER. The faceplate Trouble LED turns off and the In Service LED turns on.

The settings for the relay can be programmed manually (see Chapter 5) via the faceplate keypad or remotely via the EnerVista UR Setup software (see the EnerVista UR Setup help file).

1.5.5 RELAY PASSWORDS

a) PASSWORD SECURITY

It is recommended that passwords be set for each security level and assigned to specific personnel. There are two user security access levels, COMMAND and SETTING.

1. COMMAND

The COMMAND access level restricts the user from making any settings changes, but allows the user to perform the following operations:

- Change state of virtual inputs
- Clear event records
- Clear oscillography records
- Operate user-programmable pushbuttons

2. SETTING

The SETTING access level allows the user to make any changes to any of the setting values.

NOTE

See the Changing Settings section in Chapter 4 for complete instructions on setting security-level passwords.

b) CYBERSENTRY

When the CyberSentry option is purchased, advanced security services are available, using either device authentication or server authentication using RADIUS. When this option is purchased, the basic password security is disabled automatically. For more information, see the CyberSentry content in the *Security* section of the next chapter.

1.5.6 FLEXLOGIC CUSTOMIZATION

FlexLogic equation editing is required for setting user-defined logic for customizing the relay operations. See the FlexLogic section in Chapter 5.

1.5.7 COMMISSIONING

The C70 requires minimal maintenance after it is commissioned into service. Since the C70 is a microprocessor-based relay, its characteristics do not change over time. As such, no further functional tests are required. Expected service life is 20 years for UR devices manufactured June 2014 or later when applied in a controlled indoors environment and electrical conditions within specification.

The C70 performs a number of continual self-tests and takes the necessary action in case of any major errors (see the Relay Self-Tests section in chapter 7). However, it is recommended that C70 maintenance be scheduled with other system maintenance. This maintenance can involve in-service, out-of-service, or unscheduled maintenance.

In-service maintenance:

1. Visual verification of the analog values integrity, such as voltage and current (in comparison to other devices on the corresponding system).
2. Visual verification of active alarms, relay display messages, and LED indications.
3. LED test.
4. Visual inspection for any damage, corrosion, dust, or loose wires.
5. Event recorder file download with further events analysis.

Out-of-service maintenance:

1. Check wiring connections for firmness.
2. Analog values (currents, voltages, RTDs, analog inputs) injection test and metering accuracy verification. Calibrated test equipment is required.
3. Protection elements setting verification (analog values injection or visual verification of setting file entries against relay settings schedule).
4. Contact inputs and outputs verification. This test can be conducted by direct change of state forcing or as part of the system functional testing.
5. Visual inspection for any damage, corrosion, or dust.
6. Event recorder file download with further events analysis.
7. LED Test and pushbutton continuity check.

Unscheduled maintenance, such as a disturbance causing system interruption:

1. View the event recorder and oscillography or fault report for correct operation of inputs, outputs, and elements.

If the relay or one of its modules is of concern, contact GE Multilin for service.

2.1.1 OVERVIEW

The C70 Capacitor Bank Protection and Control System is a UR-series microprocessor-based relay for protection and control of small, medium, and large three-phase capacitor banks. The relay can be ordered with up to three CT/VT modules, allowing for flexible application to variety of bank configurations.

The key protection functions are designed to cover grounded and ungrounded, single and parallel banks. Sensitive protection functions support compensation for both external (system) unbalance and inherent unbalance of the capacitor bank itself. Both voltage and current-based balance protection functions are available. Algorithms are developed to automatically select compensation settings after repairs or other alternations of the bank.

The relay supports variety of bank configurations through flexible configurations of its AC inputs, installed voltage and current transformers, and resulting protection techniques.

The relay incorporates an *automatic voltage regulator* (AVR) responding to either voltage, reactive power, or power factor. A separate timer function initiates controls on a pre-defined time/date basis. These on-off type controls are meant to automatically close or open the associated breaker. A supervisory function is provided to program the local/remote, auto/manual functionality, temporary inhibit closing after tripping, and other auxiliary functions such as operation counters.

A capacitor control element provides remote/local and auto/manual control regulation, trip/close interlocking, and seal-in. A user-programmable time delay inhibits closing until after the bank discharges itself to a safe level.

The relay can also equipped with a serial 64/128 kbps direct input/output module for fast and reliable peer-to-peer communication with other UR-series IEDs.

The C70 metering functions include true RMS and phasors for currents and voltages, current and voltage harmonics and THD, symmetrical components, frequency, power, power factor.

Diagnostic features include an event recorder capable of storing 1024 time-tagged events, oscillography capable of storing up to 64 records with programmable trigger, content and sampling rate, and data logger acquisition of up to 16 channels, with programmable content and sampling rate. The internal clock used for time-tagging can be synchronized with an IRIG-B signal, using the Simple Network Time Protocol (SNTP) over the Ethernet port, or using the Precision Time Protocol (PTP). This precise time stamping allows the sequence of events to be determined throughout the system. Events can also be programmed (via FlexLogic™) to trigger oscillography data capture which may be set to record the measured parameters before and after the event for viewing on a computer. These tools significantly reduce troubleshooting time and simplify report generation in the event of a system fault.

Several options are available for communication. A faceplate RS232 port can be used to connect to a computer for the programming of settings and the monitoring of actual values. The RS232 port has a fixed baud rate of 19.2 kbps. The rear RS485 port allows independent access by operating and engineering staff. It can be connected to system computers with baud rates up to 115.2 kbps. All serial ports use the Modbus RTU protocol. The IEC 60870-5-103 protocol is supported on the RS485 interface. IEC 60870-5-103, DNP, and Modbus cannot be enabled simultaneously on this interface. Also only one of the DNP, IEC 60870-5-103, and IEC 60870-5-104 protocols can be enabled at any time on the relay. When the IEC 60870-5-103 protocol is chosen, the RS485 port has a fixed even parity and the baud rate can be either 9.6 kbps or 19.2 kbps. The 100Base-FX or 100Base-T Ethernet interface provides fast, reliable communications in noisy environments. The Ethernet port supports IEC 61850, Modbus/TCP, and TFTP protocols, PTP (according to IEEE Std. 1588-2008 or IEC 61588), and allows access to the relay via any standard web browser (C70 web pages). The IEC 60870-5-104 protocol is supported on the Ethernet port. The Ethernet port also supports the Parallel Redundancy Protocol (PRP) of IEC 62439-3 (clause 4, 2012) when purchased as an option.

Settings and actual values can be accessed from the front panel or EnerVista software.

The C70 IEDs use flash memory technology which allows field upgrading as new features are added. The following single line diagram illustrates the relay functionality using ANSI (American National Standards Institute) device numbers.

Table 2–1: ANSI DEVICE NUMBERS AND FUNCTIONS

NUMBER	FUNCTION
27P	Phase undervoltage
50BF	Breaker failure
50DD	Disturbance detector
50G	Ground instantaneous overcurrent
50N	Neutral instantaneous overcurrent
50P	Phase instantaneous overcurrent
50_2	Negative-sequence instantaneous overcurrent
51G	Ground time overcurrent
51N	Neutral time overcurrent
51P	Phase time overcurrent
51_2	Negative-sequence time overcurrent
59B	Bank phase overvoltage

NUMBER	FUNCTION
59N	Neutral overvoltage
59NU	Neutral voltage unbalance
59P	Phase overvoltage
59X	Auxiliary overvoltage
59_2	Negative-sequence overvoltage
60N	Bank neutral current unbalance
60P	Bank phase current unbalance
67N	Neutral directional overcurrent
67P	Phase directional overcurrent
67_2	Negative-sequence directional overcurrent
87V	Bank voltage differential

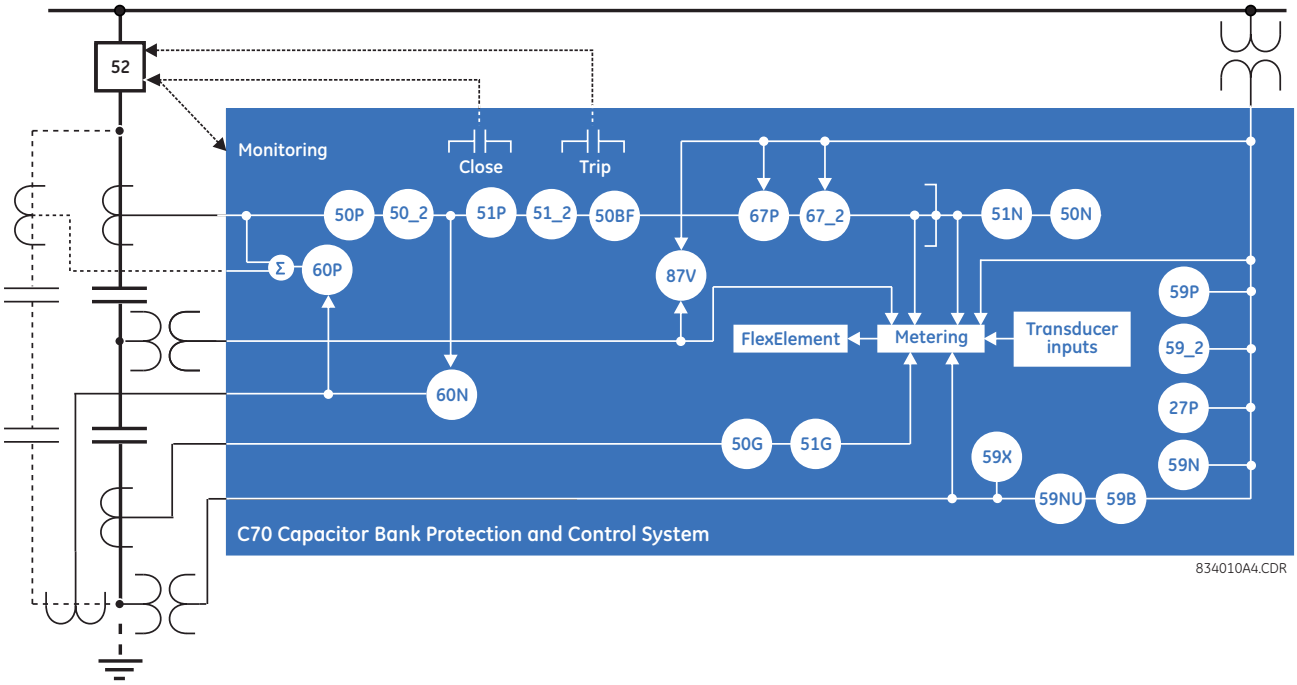

Figure 2–1: SINGLE LINE DIAGRAM

Table 2–2: OTHER DEVICE FUNCTIONS

FUNCTION	FUNCTION	FUNCTION
Breaker control	Direct inputs and outputs (32)	Time and date
Breaker flashover	Event recorder	Time synchronization over IRIG-B or IEEE 1588
Breaker restrike	FlexElements™ (16)	Time synchronization over SNTP
Capacitor control supervision	FlexLogic equations	Transducer inputs and outputs
Contact inputs (up to 96)	Frequency metering	User-definable displays
Contact outputs (up to 64)	IEC 60870-5-103 communications (optional)	User-programmable fault reports
Control pushbuttons	IEC 61850 communications (optional)	User-programmable LEDs
CyberSentry™ security	Modbus communications	User-programmable pushbuttons

Table 2–2: OTHER DEVICE FUNCTIONS

FUNCTION	FUNCTION	FUNCTION
Current metering: true RMS, phasors, symmetrical	Modbus user map	User-programmable self-tests
Data logger	Non-volatile latches	Virtual inputs (64)
Digital counters (8)	Non-volatile selector switch	Virtual outputs (96)
Digital elements (48)	Oscillography	Voltage metering: true RMS, phasors, symmetrical
Disconnect switches	Power metering	Voltage regulator
DNP 3.0 or IEC 60870-5-104 protocol	Power factor metering	VT fuse failure
	Setting groups (6)	

2.1.2 SECURITY

The following security features are available:

- Password security — Basic security present in the default offering of the product
- EnerVista security — Role-based access to various EnerVista software screens and configuration elements. The feature is available in the default offering of the product and only in the EnerVista software.
- CyberSentry security — Advanced security options available as a software option. When purchased, the options are automatically enabled, and the default Password security and EnerVista security are disabled.

Changing the password, or any other setting, does not take the relay out of service. The relay is taken out of service when a settings file is written to it.

a) ENERVISTA SECURITY

The EnerVista security management system is a role-based access control (RBAC) system that allows an administrator to manage the privileges of multiple users. This allows for access control of UR devices by multiple personnel within a substation and conforms to the principles of RBAC as defined in ANSI INCITS 359-2004. The EnerVista security management system is disabled by default to allow the administrator direct access to the EnerVista software after installation. It is recommended that security be enabled before placing the device in service.

Basic password or enhanced CyberSentry security applies, depending on purchase.

b) PASSWORD SECURITY

Password security is a basic security feature present in the default offering of the product.

Two levels of password security are provided: command and setting.

The following operations are under command password supervision:

- Changing the state of virtual inputs
- Clearing the event records
- Clearing the oscillography records
- Changing the date and time
- Clearing the data logger
- Clearing the user-programmable pushbutton states

The following operations are under setting password supervision:

- Changing any setting
- Test mode operation

The C70 supports password entry from a local or remote connection. Local access is defined as any access to settings or commands via the faceplate interface. This includes both keypad entry and the through the faceplate RS232 port. Remote access is defined as any access to settings or commands via any rear communications port. This includes both Ethernet and RS485 connections. Any changes to the local or remote passwords enables this functionality.

When entering a settings or command password via EnerVista or any serial interface, the user must enter the corresponding connection password. If the connection is to the back of the C70, the remote password must be used. If the connection is to the RS232 port of the faceplate, the local password applies.

Password access events are logged in the Event Recorder.

c) CYBERSENTRY SECURITY

CyberSentry Embedded Security is a software option that provides advanced security services. When this option is purchased, the basic password security is disabled automatically.

CyberSentry provides security through the following features:

- An Authentication, Authorization, Accounting (AAA) Remote Authentication Dial-In User Service (RADIUS) client that is centrally managed, enables user attribution, provides accounting of all user activities, and uses secure standards-based strong cryptography for authentication and credential protection.
- A Role-Based Access Control (RBAC) system that provides a permission model that allows access to UR device operations and configurations based on specific roles and individual user accounts configured on the AAA server (that is, Administrator, Supervisor, Engineer, Operator, Observer).
- Security event reporting through the Syslog protocol for supporting Security Information Event Management (SIEM) systems for centralized cybersecurity monitoring.
- Strong encryption of all access and configuration network messages between the EnerVista software and UR devices using the Secure Shell (SSH) protocol, the Advanced Encryption Standard (AES), and 128-bit keys in Galois Counter Mode (GCM) as specified in the U.S. National Security Agency Suite B extension for SSH and approved by the National Institute of Standards and Technology (NIST) FIPS-140-2 standards for cryptographic systems.

CYBERSENTRY USER ROLES

CyberSentry user roles (Administrator, Engineer, Operator, Supervisor, Observer) limit the levels of access to various UR device functions. This means that the EnerVista software allows for access to functionality based on the user's logged in role.

Example: Administrative functions can be segmented away from common operator functions, or engineering type access, all of which are defined by separate roles, as shown in the following figure, so that access of UR devices by multiple personnel within a substation is allowed.

Figure 2–2: CYBERSENTRY USER ROLES

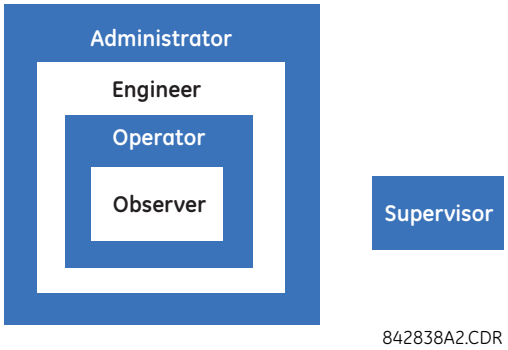

The table lists the roles that are supported and their corresponding capabilities.

Table 2–3: PERMISSIONS BY USER ROLE FOR CYBERSENTRY

Roles	Administrator	Engineer	Operator	Supervisor	Observer
	Complete access	Complete access except for CyberSentry Security	Command menu	Authorizes writing	Default role
Device Definition	R	R	R	R	R
Settings					
|---------- **Product Setup**					

Roles	Administrator	Engineer	Operator	Supervisor	Observer
|---------- Security (CyberSentry)	RW	R	R	R	R
|---------- Supervisory	see table notes	R	R	see table notes	R
|---------- Display Properties	RW	RW	R	R	R
|---------- Clear relay records (settings)	RW	RW	R	R	R
|---------- Communications	RW	RW	R	R	R
|---------- Modbus user map	RW	RW	R	R	R
|---------- Real Time Clock	RW	RW	R	R	R
|---------- Oscillography	RW	RW	R	R	R
|---------- Data Logger	RW	RW	R	R	R
|---------- Demand	RW	RW	R	R	R
|---------- User Programmable LEDs	RW	RW	R	R	R
|---------- User Programmable self test	RW	RW	R	R	R
|---------- Control Pushbuttons	RW	RW	R	R	R
|---------- User programmable Pushbuttons	RW	RW	R	R	R
|---------- Flex states	RW	RW	R	R	R
|---------- User definable dis-plays	RW	RW	R	R	R
|---------- Direct I/O	RW	RW	R	R	R
|---------- Tele-protection	RW	RW	R	R	R
|---------- Installation	RW	RW	R	R	R
|---------- **System Setup**	RW	RW	R	R	R
|---------- **FlexLogic**	RW	RW	R	R	R
|---------- **Grouped Elements**	RW	RW	R	R	R
|---------- **Control Elements**	RW	RW	R	R	R
|---------- **Inputs / Outputs**	RW	RW	R	R	R
|---------- Contact Input	RW	RW	R	R	R
|---------- Contact Input thresh-old	RW	RW	R	R	R
|---------- Virtual Inputs	RW	RW	R	R	R
|---------- Contact Output	RW	RW	R	R	R
|---------- Virtual Output	RW	RW	R	R	R
|---------- Remote Devices	RW	RW	R	R	R
|---------- Remote Inputs	RW	RW	R	R	R
|---------- Remote DPS input	RW	RW	R	R	R
|---------- Remote Output DNA Bit Pair	RW	RW	R	R	R
|---------- Remote Output user Bit Pair	RW	RW	R	R	R
|---------- Resetting	RW	RW	R	R	R
|---------- Direct Inputs	RW	RW	R	R	R
|---------- Direct Outputs	RW	RW	R	R	R
|---------- Teleprotection	RW	RW	R	R	R
|---------- Direct Analogs	RW	RW	R	R	R
|---------- Direct Integers	RW	RW	R	R	R
|---------- IEC61850 GOOSE Analogs	RW	RW	R	R	R

Roles	Administrator	Engineer	Operator	Supervisor	Observer
IEC61850 GOOSE |---------- Integers	RW	RW	R	R	R
|---------- **Transducer I/O**	RW	RW	R	R	R
|---------- **Testing**	RW	RW	R	R	R
|---------- **Front Panel Labels Designer**	NA	NA	NA	NA	NA
|---------- **Protection Summary**	NA	NA	NA	NA	NA
Commands	RW	RW	RW	R	R
|---------- **Virtual Inputs**	RW	RW	RW	R	R
|---------- **Clear Records**	RW	RW	RW	R	R
|---------- **Set date and time**	RW	RW	RW	R	R
User Displays	R	R	R	R	R
Targets	R	R	R	R	R
Actual Values	R	R	R	R	R
|---------- Front Panel Labels Designer	R	R	R	R	R
|---------- Status	R	R	R	R	R
|---------- Metereing	R	R	R	R	R
|---------- Transducer I/O	R	R	R	R	R
|---------- Records	R	R	R	R	R
|---------- Product Info	R	R	R	R	R
Maintenance	RW	RW	R	R	R
|---------- Modbus Analyzer	NA	NA	NA	NA	NA
|---------- Change Front Panel	RW	RW	RW	R	R
|---------- Update Firmware	Yes	No	No	No	No
|---------- Retrieve File	Yes	No	No	No	No

Table Notes:

1. RW = read and write access
2. R = read access
3. Supervisor = RW (default), Administrator = R (default), Administrator = RW (only if Supervisor role is disabled)
4. NA = the permission is not enforced by CyberSentry Security

CYBERSENTRY USER AUTHENTICATION

There are two types of authentication supported by CyberSentry that can be used to access the UR device:

- Device Authentication (local UR device authenticates)
- Server Authentication (RADIUS server authenticates)

The EnerVista software allows access to functionality that is determined by the user role, which comes either from the local UR device or RADIUS server.

The EnerVista software has a device authentication option on the login screen for accessing the UR device. When the "Device" button is selected, the UR uses its local authentication database and not the RADIUS server to authenticate the user. In this case, it uses its built-in roles (Administrator, Engineer, Supervisor, Observer, Operator, or Administrator and Supervisor when Device Authentication is disabled) as login names and the associated passwords are stored on the UR device. As such, when using the local accounts, access is not user-attributable.

In cases where user attributable access is required especially to facilitate auditable processes for compliance reasons, use RADIUS authentication only.

When the "Server" Authentication Type option is selected, the UR uses the RADIUS server and not its local authentication database to authenticate the user.

No password or security information are displayed in plain text by the EnerVista software or UR device, nor are they ever transmitted without cryptographic protection.

CyberSentry Server Authentication

The UR has been designed to automatically direct authentication requests based on user names. In this respect, local account names on the UR are considered as reserved, and not used on a RADIUS server.

The UR automatically detects whether an authentication request is to be handled remotely or locally. As there are only five local accounts possible on the UR, if the user ID credential does not match one of the five local accounts, the UR automatically forwards the request to a RADIUS server when one is provided.

If a RADIUS server is provided, but is unreachable over the network, server authentication requests are denied. In this situation, use local UR accounts to gain access to the UR system.

2.1.3 IEC 870-5-103 PROTOCOL

IEC 870-5-103 is a companion standard to IEC 870-5 suit of standards for transmission protocols. It defines messages and procedures for interoperability between protection equipment and devices of a control system in a substation for communicating on a serial line.

The IEC 60870-5-103 is an unbalanced (master-slave) protocol for coded-bit serial communication, exchanging information with a control system. In the context of this protocol, the protection equipment is the slave and the control system is the master. The communication is based on a point to point principle. The master must be able to interpret the IEC 60870-5-103 communication messages.

The UR implementation of IEC 60870-5-103 consists of the following functions:

- Report binary inputs
- Report analog values (measurands)
- Commands
- Time synchronization

The RS485 port supports IEC 60870-5-103.

2.2.1 OVERVIEW

The C70 is available as a 19-inch rack horizontal mount or reduced-size (¾) vertical unit and consists of the following modules: power supply, CPU, CT/VT, digital input and output, transducer input and output, and inter-relay communications. Each of these modules can be supplied in a number of configurations specified at the time of ordering. The information required to completely specify the relay is provided in the following tables (see chapter 3 for full details of relay modules).

NOTE

Order codes are subject to change without notice. See the ordering page at http://www.gegridsolutions.com/multilin/order.htm for the latest options.

The order code structure is dependent on the mounting option (horizontal or vertical) and the type of CT/VT modules (enhanced diagnostic CT/VT modules or HardFiber process bus modules). The order code options are described in the following sub-sections.

2.2.2 ORDER CODES WITH ENHANCED CT/VT MODULES

The order codes for the horizontal mount units are shown below.

Table 2–4: C70 ORDER CODES (HORIZONTAL UNITS)

	C70 - * ** - * * - F ** - H ** - M ** - P ** - U ** - W/X **	Full Size Horizontal Mount
BASE UNIT	C70	Base Unit
CPU	T	RS485 with 3 100Base-FX Ethernet, multimode, SFP with LC
	U	RS485 with 1 100Base-T Ethernet, SFP RJ-45 + 2 100Base-FX Ethernet, multimode, SFP with LC
	V	RS485 with 3 100Base-T Ethernet, SFP with RJ-45
SOFTWARE	00	No software options
	03	IEC 61850
	12	Enhanced capacitor bank control (time and date, capacitor control supervision, automatic voltage regulator)
	13	Enhanced capacitor bank control and IEC 61850
	A0	CyberSentry Lvl 1
	A3	CyberSentry Lvl 1 and IEC 61850
	AC	CyberSentry Lvl 1 and enhanced capacitor bank control
	AD	CyberSentry Lvl 1, IEC 61850, and enhanced capacitor bank control
	B0	IEEE 1588
	B3	IEEE 1588 and IEC 61850
	BC	IEEE 1588 and enhanced capacitor bank control
	BD	IEEE 1588, IEC 61850, and enhanced capacitor bank control
	C0	Parallel Redundancy Protocol (PRP)
	C3	PRP and IEC 61850
	CC	PRP and Enhanced Capacitor Bank Control
	CD	PRP, IEC 61850, and Enhanced Capacitor Bank Control
	D0	IEEE 1588 and CyberSentry Lvl 1
	D3	IEEE 1588, CyberSentry Lvl 1, and IEC 61850
	DC	IEEE 1588, CyberSentry Lvl 1, and enhanced capacitor bank control
	DD	IEEE 1588, CyberSentry Lvl 1, IEC 61850, and enhanced capacitor bank control
	E0	IEEE 1588 and PRP
	E3	IEEE 1588, PRP, and IEC 61850
	EC	IEEE 1588, PRP, enhanced capacitor bank control
	ED	IEEE 1588, PRP, IEC 61850, and enhanced capacitor bank control
	F0	PRP and CyberSentry Lvl 1
	F3	PRP, CyberSentry Lvl 1, and IEC 61850
	FC	PRP, CyberSentry Lvl 1, and enhanced capacitor bank control
	FD	PRP, CyberSentry Lvl 1, IEC 61850, and enhanced capacitor bank control
	G0	IEEE 1588, PRP, and CyberSentry Lvl 1
	G3	IEEE 1588, PRP, CyberSentry Lvl 1, and IEC 61850
	GC	IEEE 1588, PRP, CyberSentry Lvl 1, and enhanced capacitor bank control
	GD	IEEE 1588, PRP, CyberSentry Lvl 1, IEC 61850, and enhanced capacitor bank control
	J0	IEC 60870-5-103
	J3	IEC 60870-5-103 and IEC 61850
	JC	IEC 60870-5-103 and enhanced capacitor bank control
	JD	IEC 60870-5-103, IEC 61850, and enhanced capacitor bank control
	K0	IEEE 1588, PRP, and IEC 60870-5-103
	K3	IEEE 1588, PRP, IEC 60870-5-103, and IEC 61850
	KC	IEEE 1588, PRP, IEC 60870-5-103, and enhanced capacitor bank control
	KD	IEEE 1588, PRP, IEC 60870-5-103, IEC 61850, and enhanced capacitor bank control
	L0	IEC 60870-5-103, IEEE 1588, PRP, and CyberSentry Lvl 1
	L3	IEC 60870-5-103, IEEE 1588, PRP, CyberSentry Lvl 1, and IEC 61850
	LC	IEC 60870-5-103, IEEE 1588, PRP, CyberSentry Lvl 1, and enhanced capacitor bank control
	LD	IEC 60870-5-103, IEEE 1588, PRP, CyberSentry Lvl 1, IEC 61850, and enhanced capacitor bank control
MOUNT/COATING	H	Horizontal (19" rack)
	A	Horizontal (19" rack) with harsh-environment coating
FACEPLATE/ DISPLAY	C	English display
	P	English display with 4 small and 12 large programmable pushbuttons
	D	French display
	R	Russian display
	K	Enhanced front panel with English display
	M	Enhanced front panel with French display
	Q	Enhanced front panel with Russian display
	U	Enhanced front panel with Chinese display
	L	Enhanced front panel with English display and user-programmable pushbuttons
	N	Enhanced front panel with French display and user-programmable pushbuttons
	T	Enhanced front panel with Russian display and user-programmable pushbuttons
	V	Enhanced front panel with Chinese display and user-programmable pushbuttons
	W	Enhanced front panel with Turkish display
	Y	Enhanced front panel with Turkish display and user-programmable pushbuttons
	I	Enhanced front panel with German display
	J	Enhanced front panel with German display and user-programmable pushbuttons
POWER SUPPLY (redundant supply must be same type as main supply)	H	125 / 250 V AC/DC power supply
	H	125 / 250 V AC/DC with redundant 125 / 250 V AC/DC power supply RH
	L	24 to 48 V (DC only) power supply
	L	24 to 48 V (DC only) with redundant 24 to 48 V DC power supply RL
CT/VT DSP	XX	None
	XX	

Table 2–4: C70 ORDER CODES (HORIZONTAL UNITS)

C70 - * ** - * * * - F ** - H ** - M ** - P ** - U ** - W/X **	
	8L | 8L | 8L | Standard 4CT/4VT with enhanced diagnostics
	8N | 8N | 8N | Standard 8CT with enhanced diagnostics
	8V | 8V | 8V | Standard 8VT with enhanced diagnostics
DIGITAL INPUTS/OUTPUTS	XX XX XX XX XX None
	4C 4C 4C 4C 4C 4 Solid-state (current with optional voltage) MOSFET outputs
	6A 6A 6A 6A 6A 2 Form-A (voltage with optional current) and 2 Form-C outputs, 8 digital inputs
	6B 6B 6B 6B 6B 2 Form-A (voltage with optional current) and 4 Form-C outputs, 4 digital inputs
	6C 6C 6C 6C 6C 8 Form-C outputs
	6D 6D 6D 6D 6D 16 digital inputs
	6E 6E 6E 6E 6E 4 Form-C outputs, 8 digital inputs
	6F 6F 6F 6F 6F 8 Fast Form-C outputs
	6G 6G 6G 6G 6G 4 Form-A (voltage with optional current) outputs, 8 digital inputs
	6H 6H 6H 6H 6H 6 Form-A (voltage with optional current) outputs, 4 digital inputs
	6K 6K 6K 6K 6K 4 Form-C and 4 Fast Form-C outputs
	6L 6L 6L 6L 6L 2 Form-A (current with optional voltage) and 2 Form-C outputs, 8 digital inputs
	6M 6M 6M 6M 6M 2 Form-A (current with optional voltage) and 4 Form-C outputs, 4 digital inputs
	6N 6N 6N 6N 6N 4 Form-A (current with optional voltage) outputs, 8 digital inputs
	6P 6P 6P 6P 6P 6 Form-A (current with optional voltage) outputs, 4 digital inputs
	6R 6R 6R 6R 6R 2 Form-A (no monitoring) and 2 Form-C outputs, 8 digital inputs
	6S 6S 6S 6S 6S 2 Form-A (no monitoring) and 4 Form-C outputs, 4 digital inputs
	6T 6T 6T 6T 6T 4 Form-A (no monitoring) outputs, 8 digital inputs
	6U 6U 6U 6U 6U 6 Form-A (no monitoring) outputs, 4 digital inputs
	6V 6V 6V 6V 6V 2 Form-A outputs, 1 Form-C output, 2 Form-A (no monitoring) latching outputs, 8 digital inputs
TRANSDUCER INPUTS/OUTPUTS	5A 5A 5A 5A 5A 4 DCmA inputs, 4 DCmA outputs (only one 5A module is allowed)
INTER-RELAY COMMUNICATIONS (select a maximum of 1 per unit)	2H 2H IEEE C37.94, 820 nm, 128 kbps, multimode, LED, 2 Channels
	2I 2I Channel 1 - IEEE C37.94, MM, 64/128 kbps; Channel 2 - 1300 nm, single-mode, Laser
	2J 2J Channel 1 - IEEE C37.94, MM, 64/128 kbps; Channel 2 - 1550 nm, single-mode, Laser
	77 77 IEEE C37.94, 820 nm, multimode, LED, 2 Channels
	7H 7H 820 nm, multi-mode, LED, 2 Channels
	7I 7I 1300 nm, multi-mode, LED, 2 Channels
	7S 7S G.703, 2 Channels
	7W 7W RS422, 2 Channels

The order codes for the reduced size vertical mount units are shown below.

Table 2–5: C70 ORDER CODES (REDUCED SIZE VERTICAL UNITS)

C70 - * ** - * * * - F ** - H ** - M ** - P/R **	
BASE UNIT C70	Base Unit
CPU T	RS485 with 3 100Base-FX Ethernet, multimode, SFP with LC
U	RS485 with 1 100Base-T Ethernet, SFP RJ-45 + 2 100Base-FX Ethernet, multimode, SFP with LC
V	RS485 with 3 100Base-T Ethernet, SFP with RJ-45
SOFTWARE 00	No software options
03	IEC 61850
12	Enhanced capacitor bank control (time and date, capacitor control supervision, automatic voltage regulator)
13	Enhanced capacitor bank control and IEC 61850
A0	CyberSentry Lvl 1
A3	CyberSentry Lvl 1 and IEC 61850
AC	CyberSentry Lvl 1 and enhanced capacitor bank control
AD	CyberSentry Lvl 1, IEC 61850, and enhanced capacitor bank control
B0	IEEE 1588
B3	IEEE 1588 and IEC 61850
BC	IEEE 1588 and enhanced capacitor bank control
BD	IEEE 1588, IEC 61850, and enhanced capacitor bank control
C0	Parallel Redundancy Protocol (PRP)
C3	PRP and IEC 61850
CC	PRP and enhanced capacitor bank control
CD	PRP, IEC 61850, and enhanced capacitor bank control
D0	IEEE 1588 and CyberSentry Lvl 1
D3	IEEE 1588, CyberSentry Lvl 1, and IEC 61850
DC	IEEE 1588, CyberSentry Lvl 1, and enhanced capacitor bank control
DD	IEEE 1588, CyberSentry Lvl 1, IEC 61850, and enhanced capacitor bank control
E0	IEEE 1588 and PRP
E3	IEEE 1588, PRP, and IEC 61850
EC	IEEE 1588, PRP, enhanced capacitor bank control
ED	IEEE 1588, PRP, IEC 61850, and enhanced capacitor bank control
F0	PRP and CyberSentry Lvl 1
F3	PRP, CyberSentry Lvl 1, and IEC 61850
FC	PRP, CyberSentry Lvl 1, and enhanced capacitor bank control
FD	PRP, CyberSentry Lvl 1, IEC 61850, and enhanced capacitor bank control
G0	IEEE 1588, PRP, and CyberSentry Lvl 1
G3	IEEE 1588, PRP, CyberSentry Lvl 1, and IEC 61850
GC	IEEE 1588, PRP, CyberSentry Lvl 1, and enhanced capacitor bank control
GD	IEEE 1588, PRP, CyberSentry Lvl 1, IEC 61850, and enhanced capacitor bank control
J0	IEC 60870-5-103
J3	IEC 60870-5-103 and IEC 61850
JC	IEC 60870-5-103 and enhanced capacitor bank control
JD	IEC 60870-5-103, IEC 61850, and enhanced capacitor bank control
K0	IEEE 1588, PRP, and IEC 60870-5-103
K3	IEEE 1588, PRP, IEC 60870-5-103, and IEC 61850
KC	IEEE 1588, PRP, IEC 60870-5-103, and enhanced capacitor bank control
KD	IEEE 1588, PRP, IEC 60870-5-103, IEC 61850, and enhanced capacitor bank control
L0	IEC 60870-5-103, IEEE 1588, PRP, and CyberSentry Lvl 1
L3	IEC 60870-5-103, IEEE 1588, PRP, CyberSentry Lvl 1, and IEC 61850
LC	IEC 60870-5-103, IEEE 1588, PRP, CyberSentry Lvl 1, and enhanced capacitor bank control
LD	IEC 60870-5-103, IEEE 1588, PRP, CyberSentry Lvl 1, IEC 61850, and enhanced capacitor bank control
MOUNT/COATING V	Vertical (3/4 rack)
B	Vertical (3/4 rack) with harsh-environment coating
FACEPLATE/ DISPLAY F	English display
D	French display
R	Russian display
K	Enhanced front panel with English display
M	Enhanced front panel with French display
Q	Enhanced front panel with Russian display
U	Enhanced front panel with Chinese display
L	Enhanced front panel with English display and user-programmable pushbuttons
N	Enhanced front panel with French display and user-programmable pushbuttons
T	Enhanced front panel with Russian display and user-programmable pushbuttons
V	Enhanced front panel with Chinese display and user-programmable pushbuttons
W	Enhanced front panel with Turkish display
Y	Enhanced front panel with Turkish display and user-programmable pushbuttons
I	Enhanced front panel with German display
J	Enhanced front panel with German display and user-programmable pushbuttons
POWER SUPPLY H	125 / 250 V AC/DC power supply
L	24 to 48 V (DC only) power supply
CT/VT DSP XX XX	None

Table 2–5: C70 ORDER CODES (REDUCED SIZE VERTICAL UNITS)

C70 - * ** - * * * - F ** - H ** - M ** - P/R **	Reduced Size Vertical Mount (see note regarding P/R slot below)
8L	Standard 4CT/4VT with enhanced diagnostics
8N	Standard 8CT with enhanced diagnostics
8V	Standard 8VT with enhanced diagnostics
DIGITAL INPUTS/OUTPUTS	
XX	None
4C	4 Solid-state (current with optional voltage) MOSFET outputs
6A	2 Form-A (voltage with optional current) and 2 Form-C outputs, 8 digital inputs
6B	2 Form-A (voltage with optional current) and 4 Form-C outputs, 4 digital inputs
6C	8 Form-C outputs
6D	16 digital inputs
6E	4 Form-C outputs, 8 digital inputs
6F	8 Fast Form-C outputs
6G	4 Form-A (voltage with optional current) outputs, 8 digital inputs
6H	6 Form-A (voltage with optional current) outputs, 4 digital inputs
6K	4 Form-C and 4 Fast Form-C outputs
6L	2 Form-A (current with optional voltage) and 2 Form-C outputs, 8 digital inputs
6M	2 Form-A (current with optional voltage) and 4 Form-C outputs, 4 digital inputs
6N	4 Form-A (current with optional voltage) outputs, 8 digital inputs
6P	6 Form-A (current with optional voltage) outputs, 4 digital inputs
6R	2 Form-A (no monitoring) and 2 Form-C outputs, 8 digital inputs
6S	2 Form-A (no monitoring) and 4 Form-C outputs, 4 digital inputs
6T	4 Form-A (no monitoring) outputs, 8 digital inputs
6U	6 Form-A (no monitoring) outputs, 4 digital inputs
6V	2 Form-A outputs, 1 Form-C output, 2 Form-A (no monitoring) latching outputs, 8 digital inputs
TRANSDUCER INPUTS/OUTPUTS	
5A	4 DCmA inputs, 4 DCmA outputs (only one 5A module is allowed)
INTER-RELAY COMMUNICATIONS (select a maximum of 1 per unit) For the last module, slot P is used for digital input/output modules; slot R is used for inter-relay communications modules.	
2H	IEEE C37.94, 820 nm, 128 kbps, multimode, LED, 2 Channels
2i	Channel 1 - IEEE C37.94, MM, 64/128 kbps; Channel 2 - 1300 nm, single-mode, Laser
2J	Channel 1 - IEEE C37.94, MM, 64/128 kbps; Channel 2 - 1300 nm, single-mode, Laser
77	IEEE C37.94, 820 nm, multimode, LED, 2 Channels
7H	820 nm, multimode, LED, 2 Channels
7I	1300 nm, multimode, LED, 2 Channels
7S	G.703, 2 Channels
7W	RS422, 2 Channels

2.2.3 ORDER CODES WITH PROCESS BUS MODULES

The order codes for the horizontal mount units with the process bus module are shown below.

Table 2–6: C70 ORDER CODES (HORIZONTAL UNITS WITH PROCESS BUS MODULE)

C70 - * ** - * * * - F ** - H ** - M ** - P ** - U ** - W/X **	Full Size Horizontal Mount
C70	Base Unit
BASE UNIT	
CPU	
T	RS485 with 3 100Base-FX Ethernet, multimode, SFP with LC
U	RS485 with 1 100Base-T Ethernet, SFP RJ-45 + 2 100Base-FX Ethernet, multimode, SFP with LC
V	RS485 with 3 100Base-T Ethernet, SFP with RJ-45
SOFTWARE	
00	No software options
03	IEC 61850
12	Enhanced capacitor bank control (time and date, capacitor control supervision, automatic voltage regulator)
13	Enhanced capacitor bank control and IEC 61850
A0	CyberSentry Lvl 1
A3	CyberSentry Lvl 1 and IEC 61850
AC	CyberSentry Lvl 1 and enhanced capacitor bank control
AD	CyberSentry Lvl 1, IEC 61850, and enhanced capacitor bank control
B0	IEEE 1588
B3	IEEE 1588 and IEC 61850
BC	IEEE 1588 and enhanced capacitor bank control
BD	IEEE 1588, IEC 61850, and enhanced capacitor bank control
C0	Parallel Redundancy Protocol (PRP)
C3	PRP and IEC 61850
CC	PRP and enhanced capacitor bank control
CD	PRP, IEC 61850, and enhanced capacitor bank control
D0	IEEE 1588 and CyberSentry Lvl 1
D3	IEEE 1588, CyberSentry Lvl 1, and IEC 61850
DC	IEEE 1588, CyberSentry Lvl 1, and enhanced capacitor bank control
DD	IEEE 1588, CyberSentry Lvl 1, IEC 61850, and enhanced capacitor bank control
E0	IEEE 1588 and PRP
E3	IEEE 1588, PRP, and IEC 61850
EC	IEEE 1588, PRP, enhanced capacitor bank control
ED	IEEE 1588, PRP, IEC 61850, and enhanced capacitor bank control
F0	PRP and CyberSentry Lvl 1
F3	PRP, CyberSentry Lvl 1, and IEC 61850
FC	PRP, CyberSentry Lvl 1, and enhanced capacitor bank control
FD	PRP, CyberSentry Lvl 1, IEC 61850, and enhanced capacitor bank control
G0	IEEE 1588, PRP, and CyberSentry Lvl 1
G3	IEEE 1588, PRP, CyberSentry Lvl 1, and IEC 61850
GC	IEEE 1588, PRP, CyberSentry Lvl 1, and enhanced capacitor bank control
GD	IEEE 1588, PRP, CyberSentry Lvl 1, IEC 61850, and enhanced capacitor bank control
J0	IEC 60870-5-103
J3	IEC 60870-5-103 and IEC 61850
JC	IEC 60870-5-103 and enhanced capacitor bank control
JD	IEC 60870-5-103, IEC 61850, and enhanced capacitor bank control
K0	IEEE 1588, PRP, and IEC 60870-5-103
K3	IEEE 1588, PRP, IEC 60870-5-103, and IEC 61850
KC	IEEE 1588, PRP, IEC 60870-5-103, and enhanced capacitor bank control
KD	IEEE 1588, PRP, IEC 60870-5-103, IEC 61850, and enhanced capacitor bank control
L0	IEC 60870-5-103, IEEE 1588, PRP, and CyberSentry Lvl 1
L3	IEC 60870-5-103, IEEE 1588, PRP, CyberSentry Lvl 1, and IEC 61850
LC	IEC 60870-5-103, IEEE 1588, PRP, CyberSentry Lvl 1, and enhanced capacitor bank control
LD	IEC 60870-5-103, IEEE 1588, PRP, CyberSentry Lvl 1, IEC 61850, and enhanced capacitor bank control
MOUNT/COATING	
H	Horizontal (19" rack)
A	Horizontal (19" rack) with harsh environmental coating
FACEPLATE/ DISPLAY	
C	English display
P	English display with 4 small and 12 large programmable pushbuttons
D	French display
R	Russian display
K	Enhanced front panel with English display
M	Enhanced front panel with French display
Q	Enhanced front panel with Russian display
U	Enhanced front panel with Chinese display
L	Enhanced front panel with English display and user-programmable pushbuttons
N	Enhanced front panel with French display and user-programmable pushbuttons
T	Enhanced front panel with Russian display and user-programmable pushbuttons
V	Enhanced front panel with Chinese display and user-programmable pushbuttons
W	Enhanced front panel with Turkish display
Y	Enhanced front panel with Turkish display and user-programmable pushbuttons
I	Enhanced front panel with German display
J	Enhanced front panel with German display and user-programmable pushbuttons
POWER SUPPLY (redundant supply must be same type as main supply)	
H	125 / 250 V AC/DC power supply
H	RH 125 / 250 V AC/DC with redundant 125 / 250 V AC/DC power supply
L	24 to 48 V (DC only) power supply
L	RL 24 to 48 V (DC only) with redundant 24 to 48 V DC power supply

Table 2–6: C70 ORDER CODES (HORIZONTAL UNITS WITH PROCESS BUS MODULE)

	C70 - * ** - * * * - F ** - H ** - M ** - P ** - U ** - W/X **	
PROCESS BUS MODULE	XX	None
	81	Eight-port digital process bus module
DIGITAL INPUTS/OUTPUTS	XX XX XX	None
	4C 4C |	4 Solid-state (current with optional voltage) MOSFET outputs
	6A 6A |	2 Form-A (voltage with optional current) and 2 Form-C outputs, 8 digital inputs
	6B 6B |	2 Form-A (voltage with optional current) and 4 Form-C outputs, 4 digital inputs
	6C 6C |	8 Form-C outputs
	6D 6D |	16 digital inputs
	6E 6E |	4 Form-C outputs, 8 digital inputs
	6F 6F |	8 Fast Form-C outputs
	6G 6G |	4 Form-A (voltage with optional current) outputs, 8 digital inputs
	6H 6H |	6 Form-A (voltage with optional current) outputs, 4 digital inputs
	6K 6K |	4 Form-C and 4 Fast Form-C outputs
	6L 6L |	2 Form-A (current with optional voltage) and 2 Form-C outputs, 8 digital inputs
	6M 6M |	2 Form-A (current with optional voltage) and 4 Form-C outputs, 4 digital inputs
	6N 6N |	4 Form-A (current with optional voltage) outputs, 8 digital inputs
	6P 6P |	6 Form-A (current with optional voltage) outputs, 4 digital inputs
	6R 6R |	2 Form-A (no monitoring) and 2 Form-C outputs, 8 digital inputs
	6S 6S |	2 Form-A (no monitoring) and 4 Form-C outputs, 4 digital inputs
	6T 6T |	4 Form-A (no monitoring) outputs, 8 digital inputs
	6U 6U |	6 Form-A (no monitoring) outputs, 4 digital inputs
	6V 6V |	2 Form-A outputs, 1 Form-C output, 2 Form-A (no monitoring) latching outputs, 8 digital inputs
INTER-RELAY COMMUNICATIONS (select a maximum of 1 per unit)	2H	IEEE C37.94, 820 nm, 128 kbps, multimode, LED, 2 Channels
	2I	Channel 1 - IEEE C37.94, MM, 64/128 kbps; Channel 2 - 1300 nm, single-mode, Laser
	2J	Channel 1 - IEEE C37.94, MM, 64/128 kbps; Channel 2 - 1550 nm, single-mode, Laser
	77	IEEE C37.94, 820 nm, multimode, LED, 2 Channels
	7H	820 nm, multimode, LED, 2 Channels
	7I	1300 nm, multimode, LED, 2 Channels
	7S	G.703, 2 Channels
	7W	RS422, 2 Channels

The order codes for the reduced size vertical mount units with the process bus module are shown below.

Table 2–7: C70 ORDER CODES (REDUCED SIZE VERTICAL UNITS WITH PROCESS BUS MODULE)

	C70 - * ** - * * * - F ** - H ** - M ** - P/R **	
BASE UNIT	C70 |	Base Unit
CPU	T |	RS485 with 3 100Base-FX Ethernet, multimode, SFP with LC
	U |	RS485 with 1 100Base-T Ethernet, SFP RJ-45 + 2 100Base-FX Ethernet, multimode, SFP with LC
	V |	RS485 with 3 100Base-T Ethernet, SFP with RJ-45
SOFTWARE	00 |	No software options
	03 |	IEC 61850
	12 |	Enhanced capacitor bank control (time and date, capacitor control supervision, automatic voltage regulator)
	13 |	Enhanced capacitor bank control and IEC 61850
	A0 |	CyberSentry Lvl 1
	A3 |	CyberSentry Lvl 1 and IEC 61850
	AC |	CyberSentry Lvl 1 and enhanced capacitor bank control
	AD |	CyberSentry Lvl 1, IEC 61850, and enhanced capacitor bank control
	B0 |	IEEE 1588
	B3 |	IEEE 1588 and IEC 61850
	BC |	IEEE 1588 and enhanced capacitor bank control
	BD |	IEEE 1588, IEC 61850, and enhanced capacitor bank control
	C0 |	Parallel Redundancy Protocol (PRP)
	C3 |	PRP and IEC 61850
	CC |	PRP and enhanced capacitor bank control
	CD |	PRP, IEC 61850, and enhanced capacitor bank control
	D0 |	IEEE 1588 and CyberSentry Lvl 1
	D3 |	IEEE 1588, CyberSentry Lvl 1, and IEC 61850
	DC |	IEEE 1588, CyberSentry Lvl 1, and enhanced capacitor bank control
	DD |	IEEE 1588, CyberSentry Lvl 1, IEC 61850, and enhanced capacitor bank control
	E0 |	IEEE 1588 and PRP
	E3 |	IEEE 1588, PRP, and IEC 61850
	EC |	IEEE 1588, PRP, enhanced capacitor bank control
	ED |	IEEE 1588, PRP, IEC 61850, and enhanced capacitor bank control
	F0 |	PRP and CyberSentry Lvl 1
	F3 |	PRP, CyberSentry Lvl 1, and IEC 61850
	FC |	PRP, CyberSentry Lvl 1, and enhanced capacitor bank control
	FD |	PRP, CyberSentry Lvl 1, IEC 61850, and enhanced capacitor bank control
	G0 |	IEEE 1588, PRP, and CyberSentry Lvl 1
	G3 |	IEEE 1588, PRP, CyberSentry Lvl 1, and IEC 61850
	GC |	IEEE 1588, PRP, CyberSentry Lvl 1, and enhanced capacitor bank control
	GD |	IEEE 1588, PRP, CyberSentry Lvl 1, IEC 61850, and enhanced capacitor bank control
	J0 |	IEC 60870-5-103
	J3 |	IEC 60870-5-103 and IEC 61850
	JC |	IEC 60870-5-103 and enhanced capacitor bank control
	JD |	IEC 60870-5-103, IEC 61850, and enhanced capacitor bank control
	K0 |	IEEE 1588, PRP, and IEC 60870-5-103
	K3 |	IEEE 1588, PRP, IEC 60870-5-103, and IEC 61850
	KC |	IEEE 1588, PRP, IEC 60870-5-103, and enhanced capacitor bank control
	KD |	IEEE 1588, PRP, IEC 60870-5-103, IEC 61850, and enhanced capacitor bank control
	L0 |	IEC 60870-5-103, IEEE 1588, PRP, and CyberSentry Lvl 1
	L3 |	IEC 60870-5-103, IEEE 1588, PRP, CyberSentry Lvl 1, and IEC 61850
	LC |	IEC 60870-5-103, IEEE 1588, PRP, CyberSentry Lvl 1, and enhanced capacitor bank control
	LD |	IEC 60870-5-103, IEEE 1588, PRP, CyberSentry Lvl 1, IEC 61850, and enhanced capacitor bank control
MOUNT/COATING	V |	Vertical (3/4 rack)
	B |	Vertical (3/4 rack) with harsh environmental coating
FACEPLATE/ DISPLAY	F |	English display
	D |	French display
	R |	Russian display
	K |	Enhanced front panel with English display
	M |	Enhanced front panel with French display
	Q |	Enhanced front panel with Russian display
	U |	Enhanced front panel with Chinese display
	L |	Enhanced front panel with English display and user-programmable pushbuttons
	N |	Enhanced front panel with French display and user-programmable pushbuttons
	T |	Enhanced front panel with Russian display and user-programmable pushbuttons
	V |	Enhanced front panel with Chinese display and user-programmable pushbuttons
	W |	Enhanced front panel with Turkish display
	Y |	Enhanced front panel with Turkish display and user-programmable pushbuttons
	I |	Enhanced front panel with German display
	J |	Enhanced front panel with German display and user-programmable pushbuttons

Table 2–7: C70 ORDER CODES (REDUCED SIZE VERTICAL UNITS WITH PROCESS BUS MODULE)

	C70 - * ** - * * * - F ** - H ** - M ** - P/R **	Reduced Size Vertical Mount (see note regarding P/R slot below)
POWER SUPPLY	H	125 / 250 V AC/DC power supply
	L	24 to 48 V (DC only) power supply
PROCESS BUS MODULE	XX	None
	81	Eight-port digital process bus module
DIGITAL INPUTS/OUTPUTS	XX	None
		4 Solid-state (current with optional voltage) MOSFET outputs
		2 Form-A (voltage with optional current) and 2 Form-C outputs, 8 digital inputs
		2 Form-A (voltage with optional current) and 4 Form-C outputs, 4 digital inputs
		8 Form-C outputs
		16 digital inputs
		4 Form-C outputs, 8 digital inputs
		8 Fast Form-C outputs
		4 Form-A (voltage with optional current) outputs, 8 digital inputs
		6 Form-A (voltage with optional current) outputs, 4 digital inputs
		4 Form-C and 4 Fast Form-C outputs
		2 Form-A (current with optional voltage) and 2 Form-C outputs, 8 digital inputs
		2 Form-A (current with optional voltage) and 4 Form-C outputs, 4 digital inputs
		4 Form-A (current with optional voltage) outputs, 8 digital inputs
		6 Form-A (current with optional voltage) outputs, 4 digital inputs
		2 Form-A (no monitoring) and 2 Form-C outputs, 8 digital inputs
		2 Form-A (no monitoring) and 4 Form-C outputs, 4 digital inputs
		4 Form-A (no monitoring) outputs, 8 digital inputs
		6 Form-A (no monitoring) outputs, 4 digital inputs
		2 Form-A outputs, 1 Form-C output, 2 Form-A (no monitoring) latching outputs, 8 digital inputs
INTER-RELAY COMMUNICATIONS (select a maximum of 1 per unit) For the last module, slot P is used for digital and transducer input/output modules; slot R is used for inter-relay communications modules.	2H	IEEE C37.94, 820 nm, 128 kbps, multimode, LED, 2 Channels
	2I	Channel 1 - IEEE C37.94, MM, 64/128 kbps; Channel 2 - 1300 nm, single-mode, Laser
	2J	Channel 1 - IEEE C37.94, MM, 64/128 kbps; Channel 2 - 1550 nm, single-mode, Laser
	77	IEEE C37.94, 820 nm, multimode, LED, 2 Channels
	7H	820 nm, multimode, LED, 2 Channels
	7I	1300 nm, multimode, LED, 2 Channels
	7S	G.703, 2 Channels
	7W	RS422, 2 Channels

Replacement modules can be ordered separately. When ordering a replacement CPU module or faceplate, provide the serial number of your existing unit.

NOTE

Not all replacement modules may be applicable to the C70 relay. Only the modules specified in the order codes are available as replacement modules.

Replacement module codes are subject to change without notice. See the ordering page at http://www.gegridsolutions.com/multilin/order.htm for the latest options.

The replacement module order codes for the horizontal mount units are shown below.

Table 2–8: ORDER CODES FOR REPLACEMENT MODULES, HORIZONTAL UNITS

UR	-	**	-	*	
POWER SUPPLY	|	SH	A	|	125 / 300 V AC/DC
redundant supply only available in horizontal units and must be same type as main supply, for example must swap both power supplies when switching from RH to SH	|	SL	A	|	24 to 48 V (DC only)
CPU	|	T		|	RS485 with 3 100Base-FX Ethernet, multimode, SFP with LC
	|	U		|	RS485 with 1 100Base-T Ethernet, SFP RJ-45 + 2 100Base-FX Ethernet, multimode, SFP with LC
	|	V		|	RS485 with 3 100Base-T Ethernet, SFP with RJ-45
FACEPLATE/DISPLAY	|	3C		|	Horizontal faceplate with keypad and English display
	|	3D		|	Horizontal faceplate with keypad and French display
	|	3R		|	Horizontal faceplate with keypad and Russian display
	|	3A		|	Horizontal faceplate with keypad and Chinese display
	|	3P		|	Horizontal faceplate with keypad, user-programmable pushbuttons, and English display
	|	3G		|	Horizontal faceplate with keypad, user-programmable pushbuttons, and French display
	|	3S		|	Horizontal faceplate with keypad, user-programmable pushbuttons, and Russian display
	|	3B		|	Horizontal faceplate with keypad, user-programmable pushbuttons, and Chinese display
	|	3K		|	Enhanced front panel with English display
	|	3M		|	Enhanced front panel with French display
	|	3Q		|	Enhanced front panel with Russian display
	|	3U		|	Enhanced front panel with Chinese display
	|	3L		|	Enhanced front panel with English display and user-programmable pushbuttons
	|	3N		|	Enhanced front panel with French display and user-programmable pushbuttons
	|	3T		|	Enhanced front panel with Russian display and user-programmable pushbuttons
	|	3V		|	Enhanced front panel with Chinese display and user-programmable pushbuttons
	|	3I		|	Enhanced front panel with German display
	|	3J		|	Enhanced front panel with German display and user-programmable pushbuttons
CONTACT INPUTS AND OUTPUTS	|	4A		|	4 Solid-State (no monitoring) MOSFET outputs
	|	4B		|	4 Solid-State (voltage with optional current) MOSFET outputs
	|	4C		|	4 Solid-State (current with optional voltage) MOSFET outputs
	|	4D		|	16 contact inputs with Auto-Burnishing
	|	4L		|	14 Form-A (no monitoring) Latching outputs
	|	67		|	8 Form-A (no monitoring) outputs
	|	6A		|	2 Form-A (voltage with optional current) and 2 Form-C outputs, 8 contact inputs
	|	6B		|	2 Form-A (voltage with optional current) and 4 Form-C outputs, 4 contact inputs
	|	6C		|	8 Form-C outputs
	|	6D		|	16 contact inputs
	|	6E		|	4 Form-C outputs, 8 contact inputs
	|	6F		|	8 Fast Form-C outputs
	|	6G		|	4 Form-A (voltage with optional current) outputs, 8 contact inputs
	|	6H		|	6 Form-A (voltage with optional current) outputs, 4 contact inputs
	|	6K		|	4 Form-C and 4 Fast Form-C outputs
	|	6L		|	2 Form-A (current with optional voltage) and 2 Form-C outputs, 8 contact inputs
	|	6M		|	2 Form-A (current with optional voltage) and 4 Form-C outputs, 4 contact inputs
	|	6N		|	4 Form-A (current with optional voltage) outputs, 8 contact inputs
	|	6P		|	6 Form-A (current with optional voltage) outputs, 4 contact inputs
	|	6R		|	2 Form-A (no monitoring) and 2 Form-C outputs, 8 contact inputs
	|	6S		|	2 Form-A (no monitoring) and 4 Form-C outputs, 4 contact inputs
	|	6T		|	4 Form-A (no monitoring) outputs, 8 contact inputs
	|	6U		|	6 Form-A (no monitoring) outputs, 4 contact inputs
	|	6V		|	2 Form-A outputs, 1 Form-C output, 2 Form-A (no monitoring) latching outputs, 8 contact inputs
CT/VT MODULES	|	8L		|	Standard 4CT/4VT with enhanced diagnostics
(NOT AVAILABLE FOR THE C30)	|	8N		|	Standard 8CT with enhanced diagnostics
	|	8V		|	Standard 8VT with enhanced diagnostics
INTER-RELAY COMMUNICATIONS	|	2A		|	C37.94SM, 1300 nm single-mode, ELED, 1 channel single-mode
	|	2B		|	C37.94SM, 1300 nm single-mode, ELED, 2 channel single-mode
	|	2H		|	IEEE C37.94, 820 nm, 128 kbps, multimode, LED, 2 Channels
	|	2I		|	Channel 1 - IEEE C37.94, multimode, 64/128 kbps; Channel 2 - 1300 nm, single-mode, Laser
	|	2J		|	Channel 1 - IEEE C37.94, multimode, 64/128 kbps; Channel 2 - 1550 nm, single-mode, Laser
	|	72		|	1550 nm, single-mode, Laser, 1 Channel
	|	73		|	1550 nm, single-mode, Laser, 2 Channel
	|	76		|	IEEE C37.94, 820 nm, multimode, LED, 1 Channel
	|	77		|	IEEE C37.94, 820 nm, multimode, LED, 2 Channels
	|	7A		|	820 nm, multimode, LED, 1 Channel
	|	7B		|	1300 nm, multimode, LED, 1 Channel
	|	7C		|	1300 nm, single-mode, ELED, 1 Channel
	|	7D		|	1300 nm, single-mode, Laser, 1 Channel
	|	7F		|	Channel 1 - G.703; Channel 2 - 1300 nm, multimode
	|	7G		|	Channel 1 - G.703; Channel 2 - 1300 nm, single-mode ELED
	|	7H		|	820 nm, multimode, LED, 2 Channels
	|	7I		|	1300 nm, multimode, LED, 2 Channels
	|	7J		|	1300 nm, single-mode, ELED, 2 Channels
	|	7K		|	1300 nm, single-mode, Laser, 2 Channels
	|	7M		|	Channel 1 - RS422; Channel 2 - 1300 nm, multimode, LED
	|	7N		|	Channel 1 - RS422; Channel 2 - 1300 nm, single-mode, ELED
	|	7P		|	Channel 1 - RS422; Channel 2 - 1300 nm, single-mode, Laser
	|	7Q		|	Channel 1 - G.703; Channel 2 - 1300 nm, single-mode Laser
	|	7R		|	G.703, 1 Channel
	|	7S		|	G.703, 2 Channels
	|	7T		|	RS422, 1 Channel
	|	7W		|	RS422, 2 Channels
TRANSDUCER	|	5A		|	4 DCmA inputs, 4 DCmA outputs (only one 5A or 5D module is allowed)
INPUTS/OUTPUTS	|	5C		|	8 RTD inputs
	|	5D		|	4 RTD inputs, 4 DCmA outputs (only one 5A or 5D module is allowed)
	|	5E		|	4 DCmA inputs, 4 RTD inputs
	|	5F		|	8 DCmA inputs

The replacement module order codes for the reduced-size vertical mount units are shown below.

Table 2–9: ORDER CODES FOR REPLACEMENT MODULES, VERTICAL UNITS

UR	-	**	-	*	
POWER SUPPLY		SH	B		125 / 300 V AC/DC
		SL	B		24 to 48 V (DC only)
CPU		T			RS485 with 3 100Base-FX Ethernet, multimode, SFP with LC
		U			RS485 with 1 100Base-T Ethernet, SFP RJ-45 + 2 100Base-FX Ethernet, multimode, SFP with LC
		V			RS485 with 3 100Base-T Ethernet, SFP with RJ-45
FACEPLATE/DISPLAY		3F			Vertical faceplate with keypad and English display
		3D			Vertical faceplate with keypad and French display
		3R			Vertical faceplate with keypad and Russian display
		3A			Vertical faceplate with keypad and Chinese display
		3K			Enhanced front panel with English display
		3M			Enhanced front panel with French display
		3Q			Enhanced front panel with Russian display
		3U			Enhanced front panel with Chinese display
		3L			Enhanced front panel with English display and user-programmable pushbuttons
		3N			Enhanced front panel with French display and user-programmable pushbuttons
		3T			Enhanced front panel with Russian display and user-programmable pushbuttons
		3V			Enhanced front panel with Chinese display and user-programmable pushbuttons
		3I			Enhanced front panel with German display
		3J			Enhanced front panel with German display and user-programmable pushbuttons
CONTACT INPUTS/OUTPUTS		4A			4 Solid-State (no monitoring) MOSFET outputs
		4B			4 Solid-State (voltage with optional current) MOSFET outputs
		4C			4 Solid-State (current with optional voltage) MOSFET outputs
		4D			16 contact inputs with Auto-Burnishing
		4L			14 Form-A (no monitoring) Latching outputs
		67			8 Form-A (no monitoring) outputs
		6A			2 Form-A (voltage with optional current) and 2 Form-C outputs, 8 contact inputs
		6B			2 Form-A (voltage with optional current) and 4 Form-C outputs, 4 contact inputs
		6C			8 Form-C outputs
		6D			16 contact inputs
		6E			4 Form-C outputs, 8 contact inputs
		6F			8 Fast Form-C outputs
		6G			4 Form-A (voltage with optional current) outputs, 8 contact inputs
		6H			6 Form-A (voltage with optional current) outputs, 4 contact inputs
		6K			4 Form-C and 4 Fast Form-C outputs
		6L			2 Form-A (current with optional voltage) and 2 Form-C outputs, 8 contact inputs
		6M			2 Form-A (current with optional voltage) and 4 Form-C outputs, 4 contact inputs
		6N			4 Form-A (current with optional voltage) outputs, 8 contact inputs
		6P			6 Form-A (current with optional voltage) outputs, 4 contact inputs
		6R			2 Form-A (no monitoring) and 2 Form-C outputs, 8 contact inputs
		6S			2 Form-A (no monitoring) and 4 Form-C outputs, 4 contact inputs
		6T			4 Form-A (no monitoring) outputs, 8 contact inputs
		6U			6 Form-A (no monitoring) outputs, 4 contact inputs
		6V			2 Form-A outputs, 1 Form-C output, 2 Form-A (no monitoring) latching outputs, 8 contact inputs
CT/VT MODULES		8L			Standard 4CT/4VT with enhanced diagnostics
(NOT AVAILABLE FOR THE C30)		8N			Standard 8CT with enhanced diagnostics
		8V			Standard 8VT with enhanced diagnostics
INTER-RELAY COMMUNICATIONS		2A			C37.94SM, 1300 nm single-mode, ELED, 1 channel single-mode
		2B			C37.94SM, 1300 nm single-mode, ELED, 2 channel single-mode
		2H			IEEE C37.94, 820 nm, 128 kbps, multimode, LED, 2 Channels
		2I			Channel 1 - IEEE C37.94, multimode, 64/128 kbps; Channel 2 - 1300 nm, single-mode, Laser
		2J			Channel 1 - IEEE C37.94, multimode, 64/128 kbps; Channel 2 - 1550 nm, single-mode, Laser
		72			1550 nm, single-mode, Laser, 1 Channel
		73			1550 nm, single-mode, Laser, 2 Channel
		76			IEEE C37.94, 820 nm, 64 kbps, multimode, LED, 1 Channel
		77			IEEE C37.94, 820 nm, 64 kbps, multimode, LED, 2 Channels
		7A			820 nm, multimode, LED, 1 Channel
		7B			1300 nm, multimode, LED, 1 Channel
		7C			1300 nm, single-mode, ELED, 1 Channel
		7D			1300 nm, single-mode, Laser, 1 Channel
		7F			Channel 1 - G.703; Channel 2 - 1300 nm, multimode
		7G			Channel 1 - G.703; Channel 2 - 1300 nm, single-mode ELED
		7H			820 nm, multimode, LED, 2 Channels
		7I			1300 nm, multimode, LED, 2 Channels
		7J			1300 nm, single-mode, ELED, 2 Channels
		7K			1300 nm, single-mode, Laser, 2 Channels
		7M			Channel 1 - RS422; Channel 2 - 1300 nm, multimode, LED
		7N			Channel 1 - RS422; Channel 2 - 1300 nm, single-mode, ELED
		7P			Channel 1 - RS422; Channel 2 - 1300 nm, single-mode, Laser
		7Q			Channel 1 - G.703; Channel 2 - 1300 nm, single-mode Laser
		7R			G.703, 1 Channel
		7S			G.703, 2 Channels
		7T			RS422, 1 Channel
		7W			RS422, 2 Channels

2.3.1 UR SIGNAL PROCESSING

The UR series relays are microprocessor-based protective relays that are designed to measure power system conditions directly via CT and VT inputs and via other sources of information, such as analog inputs, communications inputs and contact inputs. The following figure shows the overall signal processing in URs.

An analog low pass anti-aliasing filter with a 3 dB corner frequency is set at 2.4 kHz and is used for current and voltage analog filtering as well as signal conditioning. The same filtering is applied for phase, ground currents, phase-to-phase (when applicable), and auxiliary voltages. The 2.4 kHz cut-off frequency applies to both 50 Hz and 60 Hz applications and fixed in the hardware, and thus is not dependent on the system nominal frequency setting.

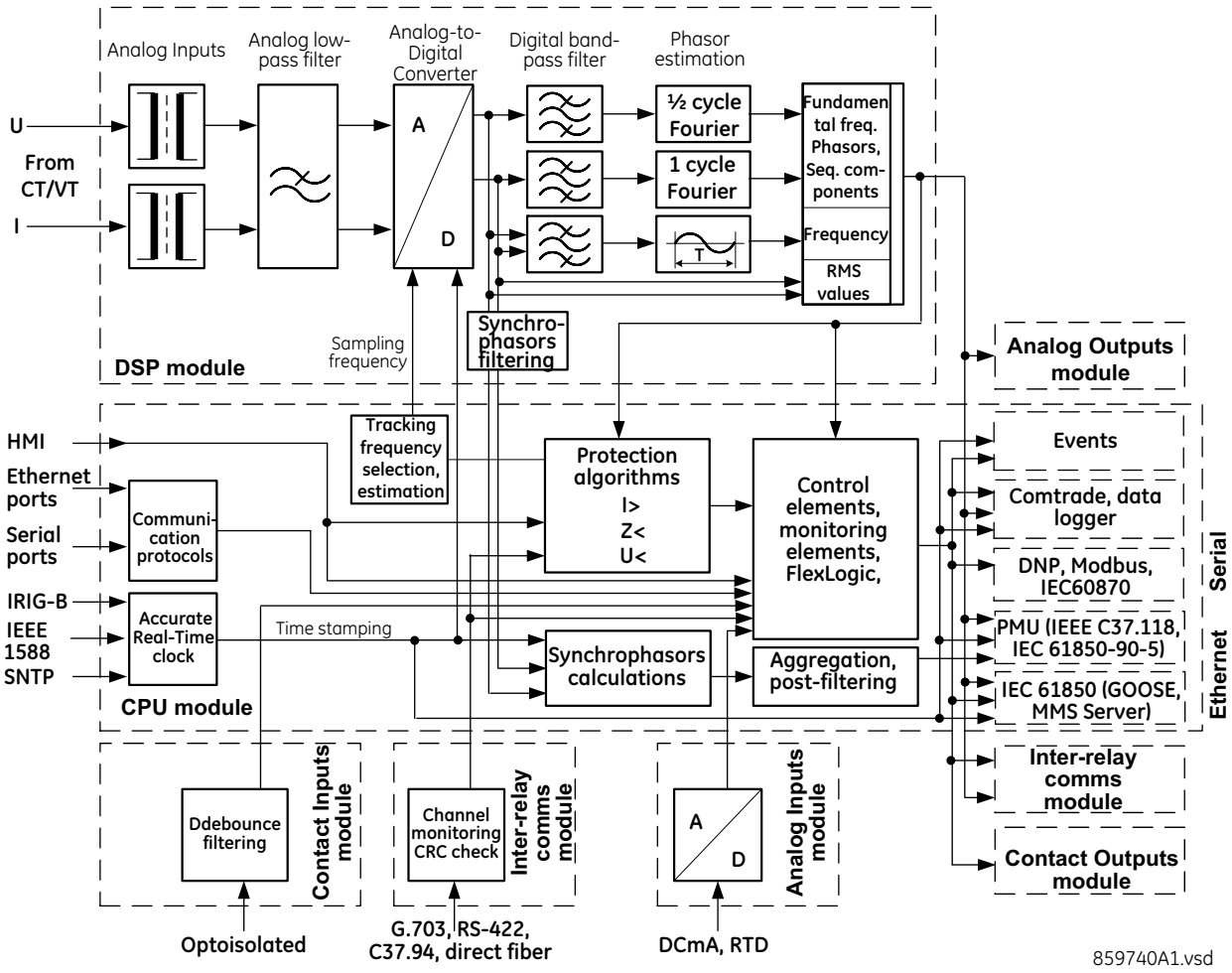

Figure 2–3: UR SIGNAL PROCESSING

The UR samples its AC signals at 64 samples per cycle, that is, at 3840 Hz in 60 Hz systems, and 3200 Hz in 50 Hz systems. The sampling rate is dynamically adjusted to the actual system frequency by an accurate and fast frequency tracking system.

The A/D converter has the following ranges of AC signals:

Voltages:

$$\pm\sqrt{2}\cdot 260(V) \qquad \textbf{(EQ 2.1)}$$

Currents:

$$\pm\sqrt{2}\cdot 46 rated(A) \quad \textbf{(EQ 2.2)}$$

Current harmonics are estimated based on raw samples with the use of the full-cycle Fourier filter. Harmonics 2nd through 25th are estimated.

True RMS value for the current is calculated on a per-phase basis. The true RMS can be used for demand recording or as an input signal to Time Overcurrent function, if the latter is intended for thermal protection. The true RMS is calculated as per the widely accepted definition:

$$I_{RMS(t)} = \sqrt{\frac{1}{T}\int_{(t-T)}^{t} i^2(t)dt} \quad \textbf{(EQ 2.3)}$$

RMS values include harmonics, inter-harmonics, DC components, and so on, along with fundamental frequency values. The true RMS value reflects thermal effects of the current and is used for the thermal related monitoring and protection functions.

Protection and control functions respond to phasors of the fundamental and/or harmonic frequency components (magnitudes and angles), with an exception for some functions that have an option for RMS or fundamental measurements, or some function responding to RMS only. This type of response is explained typically in each element's section in the instruction manual.

Currents are pre-filtered using a Finite Impulse Response (FIR) digital filter. The filter is designed to reject DC components and low-frequency distortions, without amplifying high-frequency noise. This filter is referred to as a modified MIMIC filter, which provides excellent filtering and overall balance between speed and accuracy of filtering. The filter is cascaded with the full-cycle Fourier filter for the current phasor estimation.

Voltages are pre-filtered using a patented Finite Impulse Response (FIR) digital filter. The filter has been optimized to reject voltage transformers specific distortions, such as Capacitive Voltage Transformer (CVT) noise and high-frequency oscillatory components. The filter is cascaded with the half-cycle Fourier filter for the voltage phasor estimation.

The URs measure power system frequency using the Clarke transformation by estimating the period of the waveform from two consecutive zero-crossings in the same direction (negative-to-positive). Voltage or current samples are pre-filtered using a Finite Impulse Response (FIR) digital filter to remove high frequency noise contained in the signal. The period is used after several security conditions are met, such as true RMS signal must be above 6% nominal for a certain time and others. If these security conditions are not met, the last valid measurement is used for a specific time after which the UR reverts to nominal system frequency.

Synchrophasors are calculated using a patented convolution integral algorithm. This algorithm allows use of the same time stamped samples, which are used for protection and taken at the same sampling frequency. This allows URs to use one sampling clock for both protection algorithms and synchrophasors.

Synchrophasors on firmware versions 7.23 and up have been tested and certified to meet IEEE C37.118-2011 and C37.118.1a-2014 standards for both metering and protection classes with outputs available up to 60 synchrophasors per second for the metering class and 120 synchrophasors per second for the protection class. Synchrophasors measurement are also available via IEC 61850-90-5 protocol.

Contact inputs threshold is settable in the firmware with 17, 33, 84, 166 VDC settings available. Inputs are scanned every 0.5 ms and can be conditioned for the critical applications, using debounce time timer, settable from 0.0 ms to 16.0 ms. Contact inputs with auto-burnishing are available as well, when external contacts are exposed to the contamination in a harsh industrial environment.

All measured values are available in the UR metering section on the front panel and via communications protocols. Measured analog values and binary signals can be captured in COMTRADE format with sampling rates from 8 to 64 samples per power cycle. Analog values can be captured with Data Logger, allowing much slower rates extended over long period of time.

Other advanced UR order code options are available to support IEC 61850 Ed2.0 (including fast GOOSE, MMS server, 61850 services, ICD/CID/IID files, and so on), IEEE 1588 (IEEE C37.238 power profile) based time synchronization, CyberSentry (advanced cyber security), the Parallel Redundancy Protocol (PRP), IEC 60870-5-103, and so on.

SPECIFICATIONS ARE SUBJECT TO CHANGE WITHOUT NOTICE

2.4.1 PROTECTION ELEMENTS

NOTE

The operating times include the activation time of a trip rated form-A output contact unless otherwise indicated. FlexLogic operands of a given element are 4 ms faster. Take this into account when using FlexLogic to interconnect with other protection or control elements of the relay, building FlexLogic equations, or interfacing with other IEDs or power system devices via communications or different output contacts. If not specified, the operate times given here are for a 60 Hz system at nominal system frequency. Operate times for a 50 Hz system are 1.2 times longer. Timer Accuracy is specified as a percentage of the total operating time that is the sum of the Operate Time and settable Pickup Delay.

VOLTAGE DIFFERENTIAL

Operation:	per phase
Auto-setting:	on demand from keypad, per phase
Number of elements:	1 per VT bank, maximum of 3
Matching factor:	0.5000 to 2000.0000 in steps of 0.0001, per phase
Number of trip/alarm stages:	4 per phase with individual timers per stage
Pickup threshold:	0.001 to 1.000 pu of bus voltage in steps of 0.001
Pickup level accuracy:	0.003 pu
Hysteresis:	3% or 0.0005 pu whichever is greater
Pickup delay:	0 to 600.00 s in steps of 0.01
Timer accuracy:	±3% of operate time or ±35 ms, whichever is greater
Operate time:	<35 ms at 60 Hz

CAPACITOR CONTROL

Functionality:	contains remote/local and auto/manual non-volatile latches, collects trip, open and close input requests and issues outputs to control tripping and closing
Closing inhibit delay:	0 to 60 minutes in steps of 1 second
Trip and close seal-in timers:	0 to 60.000 s in steps of 0.001

AUTOMATIC VOLTAGE REGULATOR

Number of elements:	1 per CT/VT module, maximum of 3
Modes:	voltage with load drop compensation or reactive power with power factor limit
Minimum voltage supervision:	0.500 to 1.500 pu in steps of 0.001
Close voltage level:	0.750 to 1.500 pu in steps of 0.001
Open voltage level:	0.750 to 1.500 pu in steps of 0.001
Voltage pickup accuracy:	±0.5% of setting from 10 to 208 V
Close reactive power level:	–1.50 to 1.50 pu in steps of 0.01
Open reactive power level:	–1.50 to 1.50 pu in steps of 0.01
Power pickup accuracy:	±0.05 pu
Power factor limit	0.50 to 1.00 in steps of 0.01
Power factor accuracy:	±0.05
Hysteresis:	0.02 pu (voltage); 0.05 pu (vars)
Close delay:	0 to 65.353 s in steps of 0.001
Open delay:	0 to 65.353 s in steps of 0.001
Timer accuracy:	±3% of operate time or ±20 ms, whichever is greater
Operate time:	<80 ms at 60 Hz

PHASE/NEUTRAL/GROUND TOC

Current:	Phasor or RMS
Pickup level:	0.000 to 30.000 pu in steps of 0.001
Dropout level:	97% of pickup
Level accuracy:	
0.1 to 2.0 × CT:	±0.5% of reading or ±0.4% of rated (whichever is greater)
> 2.0 × CT:	±1.5% of reading > 2.0 × CT rating
Timing characteristics:	IEEE Moderately/Very/Extremely Inverse; IEC (and BS) A/B/C and Short Inverse; GE IAC Inverse, Short/Very/Extremely Inverse; I^2t; FlexCurves™ (programmable); (Curve multiplier 0.00 to 600.00 in steps of 0.01 s) Definite Time (Time delay = 0.00 to 600.00 in steps of 0.01 s)
Reset type:	Instantaneous/Timed (per IEEE)
Curve timing accuracy	
at 1.03 to 20 x pickup:	±3.5% of operate time or ±½ cycle (whichever is greater) from pickup to operate
Voltage restraint:	modifies pickup current for voltage in the range of 0.1<V<0.9 VT Nominal in a fixed linear relationship

PHASE/NEUTRAL/GROUND IOC

Pickup level:	0.000 to 30.000 pu in steps of 0.001
Dropout level:	97% of pickup
Level accuracy:	
0.1 to 2.0 × CT rating:	±0.5% of reading or ±0.4% of rated (whichever is greater)
> 2.0 × CT rating	±1.5% of reading
Overreach:	<2%
Pickup delay:	0.00 to 600.00 s in steps of 0.01
Reset delay:	0.00 to 600.00 s in steps of 0.01
Operate time:	<16 ms at 3 × pickup at 60 Hz (Phase IOC) <20 ms at 3 × pickup at 60 Hz (Neutral IOC) <25 ms at 3 x pickup at 60 H (Ground IOC)
Timer accuracy:	±3.5% of operate time or ±1/4 cycle (whichever is greater)

NEGATIVE SEQUENCE TOC

Pickup level: 0.000 to 30.000 pu in steps of 0.001
Dropout level: 97% of pickup
Level accuracy: ±0.5% of reading or ±0.4% of rated (whichever is greater) from 0.1 to 2.0 x CT rating ±1.5% of reading > 2.0 x CT rating
Timing characteristics: IEEE Moderately/Very/Extremely Inverse; IEC (and BS) A/B/C and Short Inverse; GE IAC Inverse, Short/Very/Extremely Inverse; I^2t; FlexCurves™ (programmable) (Curve multiplier = 0.00 to 600.00 in steps of 0.01 s); Definite Time (Time delay = 0.00 to 600.00 in steps of 0.01 s)
Reset type: Instantaneous/Timed (per IEEE) and Linear
Curve timing accuracy at 1.03 to 20 x pickup: ±3.5% of operate time or ±½ cycle (whichever is greater) from pickup to operate

NEGATIVE SEQUENCE IOC

Pickup level: 0.000 to 30.000 pu in steps of 0.001
Dropout level: 97% of pickup
Level accuracy: 0.1 to 2.0 × CT rating: ±0.5% of reading or ±0.4% of rated (whichever is greater); > 2.0 × CT rating: ±1.5% of reading
Overreach: <2%
Pickup delay: 0.00 to 600.00 s in steps of 0.01
Reset delay: 0.00 to 600.00 s in steps of 0.01
Operate time: <20 ms at 3 × pickup at 60 Hz
Timer accuracy: ±3% of operate time or ±1/4 cycle (whichever is greater)

PHASE DIRECTIONAL OVERCURRENT

Relay connection: 90° (quadrature)
Quadrature voltage: ABC phase seq.: phase A (V_{BC}), phase B (V_{CA}), phase C (V_{AB}); ACB phase seq.: phase A (V_{CB}), phase B (V_{AC}), phase C (V_{BA})
Polarizing voltage threshold: 0.000 to 3.000 pu in steps of 0.001
Current sensitivity threshold: 0.05 pu
Characteristic angle: 0 to 359° in steps of 1
Angle accuracy: ±2°
Operation time (FlexLogic operands):
Tripping (reverse load, forward fault):< 12 ms, typically
Blocking (forward load, reverse fault):< 8 ms, typically

NEUTRAL DIRECTIONAL OVERCURRENT

Directionality: Co-existing forward and reverse
Polarizing: Voltage, Current, Dual, Dual-V, Dual-I
Polarizing voltage: V_0 or VX
Polarizing current: IG
Operating current: I_0
Level sensing: $3 \times (|I\_0| - K \times |I\_1|)$, IG
Independent for forward and reverse
Restraint, *K*: 0.000 to 0.500 in steps of 0.001
Characteristic angle: –90 to 90° in steps of 1
Limit angle: 40 to 90° in steps of 1, independent for forward and reverse
Angle accuracy: ±2°
Offset impedance: 0.00 to 250.00 Ω in steps of 0.01
Pickup level: 0.002 to 30.000 pu in steps of 0.01
Dropout level: 97 to 98%
Operation time: <16 ms at 3 × pickup at 60 Hz

NEGATIVE SEQUENCE DIRECTIONAL OC

Directionality: Co-existing forward and reverse
Polarizing: Voltage
Polarizing voltage: V_2
Operating current: I_2
Level sensing:
Zero-sequence:$|I\_0| - K \times |I\_1|$
Negative-sequence:$|I\_2| - K \times |I\_1|$
Restraint, *K*: 0.000 to 0.500 in steps of 0.001
Characteristic angle: 0 to 90° in steps of 1
Limit angle: 40 to 90° in steps of 1, independent for forward and reverse
Angle accuracy: ±2°
Offset impedance: 0.00 to 250.00 Ω in steps of 0.01
Pickup level: 0.015 to 30.000 pu in steps of 0.01
Dropout level: 97%
Operation time: <16 ms at 3 × pickup at 60 Hz

PHASE CURRENT UNBALANCE

Operation: per phase
Auto-setting: on demand from keypad, per phase
Number of elements: 1 per CT bank, maximum of 3
Inherent unbalance factor:–0.1000 to 0.1000 in steps of 0.0001, per phase
Number of trip/alarm stages: 4 per phase with individual timers per stage
Pickup threshold: 0.001 to 5.000 pu of split-phase CT nominal in steps of 0.001
Pickup level accuracy: 0.002 pu for <1 pu current and <20 CT mismatch between phase and differential CT
Hysteresis: 3% or 0.001 pu, whichever is greater
Pickup delay: 0 to 600.00 s in steps of 0.01
Timer accuracy: ±3% of operate time or ±35 ms, whichever is greater
Operate time: <35 ms at 60 Hz

NEUTRAL CURRENT UNBALANCE

Auto-setting: on demand from keypad
Number of elements: 1 per CT bank, to a maximum of 3
Inherent unbalance factor: magnitude of 0 to 0.1500 in steps of 0.0001, angle of 0 to 359° in steps of 1
Number of trip/alarm stages: 4, with individual timers per stage
Pickup threshold: 0.001 to 5.000 pu of ground input CT in steps of 0.001
Pickup level accuracy: 0.002 pu for <1 pu current and < 20 CT mismatch between phase and neutral CT
Hysteresis: 3% or 0.001 pu, whichever is greater
Slope: 0.0 to 10.0% in steps of 0.1
Pickup delay: 0 to 600.00 s in steps of 0.01
Timer accuracy: ±3% of operate time or ±35 ms, whichever is greater
Operate time: <35 ms at 60 Hz

NEUTRAL VOLTAGE UNBALANCE

Operation: compensated for inherent bank and system unbalance
Auto-setting: on demand from keypad
Number of elements: 1 per VT bank, maximum of 3
Compensating factor: 0.7500 to 1.2500 in steps of 0.0001
Number of trip/alarm stages: 4 with individual timers
Pickup threshold: 0.001 to 1.000 pu of nominal of the bank neutral point VT in steps of 0.001
Slope: 0 to 10% in steps of 0.1
Pickup level accuracy: 0.003 pu for <10 VT mismatch between phase and neutral VT
Hysteresis: 3% or 0.001 pu whichever is greater
Pickup delay: 0 to 600.00 s in steps of 0.01
Timer accuracy: ±3% of operate time or ±35 ms, whichever is greater
Operate time: <35 ms at 60 Hz

PHASE UNDERVOLTAGE

Pickup level: 0.000 to 3.000 pu in steps of 0.001
Dropout level: 102% of pickup
Level accuracy: ±0.5% of reading from 10 to 208 V
Timing characteristics: GE IAV Inverse (Curve multiplier 0.00 to 600.00 in steps of 0.01 s)
Definite Time (Time delay = 0.00 to 600.00 in steps of 0.01 s)
Curve timing accuracy
at <0.90 x pickup: ±3.5% of operate time or ±1/2 cycle (whichever is greater) from pickup to operate
Operate time: <30 ms at 0.9 pickup at 60 Hz for Definite Time mode

BANK OVERVOLTAGE

Operation: per phase, 3 stages of definite-time, 1 stage of inverse-time
Application: grounded and ungrounded banks
Number of elements: 1 per VT bank, maximum of 3
Pickup threshold: 0.800 to 2.000 pu of bus voltage in steps of 0.001, per phase
Pickup level accuracy: 0.002 pu for operating voltage <70 V
Hysteresis: 0.02 pu
Timing characteristics: Stage 1 to Stage 3: Definite time (Time delay = 0.00 to 600.00 in steps of 0.01 s)
Stage 4: any user-programmable FlexCurve (Stage 4)
Timer accuracy: ±3% of operate time or ±35 ms, whichever is greater
Operate time: <35 ms at 60 Hz

PHASE OVERVOLTAGE

Voltage: Phasor only
Pickup level: 0.000 to 3.000 pu in steps of 0.001
Dropout level: 98% of pickup
Level accuracy: ±0.5% of reading from 10 to 208 V
Pickup delay: 0.00 to 600.00 in steps of 0.01 s
Operate time: <30 ms at 1.10 × pickup at 60 Hz
Timer accuracy: ±3% of operate time or ±1/4 cycle (whichever is greater)

NEUTRAL OVERVOLTAGE

Pickup level: 0.000 to 3.000 pu in steps of 0.001
Dropout level: 97% of pickup
Level accuracy: ±0.5% of reading from 10 to 208 V
Pickup delay: 0.00 to 600.00 s in steps of 0.01 (definite time) or user-defined curve
Reset delay: 0.00 to 600.00 s in steps of 0.01
Curve timing accuracy
at >1.1 x pickup: ±3.5% of operate time or ±1 cycle (whichever is greater) from pickup to operate
Operate time: <30 ms at 1.10 × pickup at 60 Hz

AUXILIARY OVERVOLTAGE

Pickup level: 0.000 to 3.000 pu in steps of 0.001
Dropout level: 97% of pickup
Level accuracy: ±0.5% of reading from 10 to 208 V
Pickup delay: 0 to 600.00 s in steps of 0.01
Reset delay: 0 to 600.00 s in steps of 0.01
Timer accuracy: ±3% of operate time or ±1/4 cycle (whichever is greater)
Operate time: <30 ms at 1.10 × pickup at 60 Hz

NEGATIVE SEQUENCE OVERVOLTAGE

Pickup level: 0.000 to 1.250 pu in steps of 0.001
Dropout level: 97% of pickup
Level accuracy: ±0.5% of reading from 10 to 208 V
Pickup delay: 0 to 600.00 s in steps of 0.01
Reset delay: 0 to 600.00 s in steps of 0.01
Timer accuracy: ±3% of operate time or ±20 ms, whichever is greater
Operate time: <30 ms at 1.10 × pickup at 60 Hz

BREAKER FAILURE

Mode:	1-pole, 3-pole
Current supervision:	phase, neutral current
Current supv. pickup:	0.001 to 30.000 pu in steps of 0.001
Current supv. dropout:	97% of pickup
Current supv. accuracy:	
0.1 to 2.0 × CT rating:	±0.75% of reading or ±2% of rated (whichever is greater)
above 2 × CT rating:	±2.5% of reading

BREAKER FLASHOVER

Operating quantity:	phase current, voltage and voltage difference
Pickup level voltage:	0 to 1.500 pu in steps of 0.001
Dropout level voltage:	97% of pickup
Pickup level current:	0 to 1.500 pu in steps of 0.001
Dropout level current:	97% of pickup
Level accuracy:	±0.5% or ±0.1% of rated, whichever is greater
Pickup delay:	0 to 65.535 s in steps of 0.001
Timer accuracy:	±3% of operate time or ±42 ms, whichever is greater
Operate time:	<42 ms at 1.10 × pickup at 60 Hz

BREAKER RESTRIKE

Principle:	detection of high-frequency overcurrent condition ¼ cycle after breaker opens
Availability:	one per CT/VT module (not including 8Z modules)
Pickup level:	0.1 to 2.00 pu in steps of 0.01
Reset delay:	0.000 to 65.535 s in steps of 0.001

THERMAL OVERLOAD PROTECTION

Thermal overload curves: IEC 255-8 curve

Base current:	0.20 to 3.00 pu in steps of 0.01
Overload (k) factor:	1.00 to 1.20 pu in steps of 0.05
Trip time constant:	0 to 1000 min. in steps of 1
Reset time constant:	0 to 1000 min. in steps of 1
Minimum reset time:	0 to 1000 min. in steps of 1

Timer accuracy (cold curve): ±100 ms or 2%, whichever is greater

Timer accuracy (hot curve): ±500 ms or 2%, whichever is greater for $I_p < 0.9 \times k \times I_b$ and $I / (k \times I_b) > 1.1$

TRIP BUS (TRIP WITHOUT FLEXLOGIC)

Number of elements:	6
Number of inputs:	16
Operate time:	<2 ms at 60 Hz
Timer accuracy:	±3% or 10 ms, whichever is greater

2.4.2 USER-PROGRAMMABLE ELEMENTS

FLEXLOGIC

Programming language:	Reverse Polish Notation with graphical visualization (keypad programmable)
Lines of code:	512
Internal variables:	64
Supported operations:	NOT, XOR, OR (2 to 16 inputs), AND (2 to 16 inputs), NOR (2 to 16 inputs), NAND (2 to 16 inputs), latch (reset-dominant), edge detectors, timers
Inputs:	any logical variable, contact, or virtual input
Number of timers:	32
Pickup delay:	0 to 60000 (ms, sec., min.) in steps of 1
Dropout delay:	0 to 60000 (ms, sec., min.) in steps of 1
Timer accuracy:	±0.1% of operate time or ±1/8 cycle, whichever is greater

FLEXCURVES™

Number:	4 (A through D)
Reset points:	40 (0 through 1 of pickup)
Operate points:	80 (1 through 20 of pickup)
Time delay:	0 to 65535 ms in steps of 1

FLEX STATES

Number:	up to 256 logical variables grouped under 16 Modbus addresses
Programmability:	any logical variable, contact, or virtual input

FLEXELEMENTS™

Number of elements:	16
Operating signal:	any analog actual value, or two values in differential mode
Operating signal mode:	signed or absolute value
Operating mode:	level, delta
Comparator direction:	over, under
Pickup level:	–90.000 to 90.000 pu in steps of 0.001
Hysteresis:	0.1 to 50.0% in steps of 0.1
Delta dt:	20 ms to 60 days
Pickup & dropout delay:	0.000 to 65.535 s in steps of 0.001

NON-VOLATILE LATCHES

Type:	set-dominant or reset-dominant
Number:	16 (individually programmed)
Output:	stored in non-volatile memory
Execution sequence:	as input prior to protection, control, and FlexLogic

USER-PROGRAMMABLE LEDs

Number:	48 plus trip and alarm
Programmability:	from any logical variable, contact, or virtual input
Reset mode:	self-reset or latched

LED TEST

Initiation:	from any contact input or user-programmable condition
Number of tests:	3, interruptible at any time
Duration of full test:	approximately 3 minutes
Test sequence 1:	all LEDs on
Test sequence 2:	all LEDs off, one LED at a time on for 1 s
Test sequence 3:	all LEDs on, one LED at a time off for 1 s

USER-DEFINABLE DISPLAYS

Number of displays:	16
Lines of display:	2 × 20 alphanumeric characters
Parameters:	up to 5, any Modbus register addresses
Invoking and scrolling:	keypad, or any user-programmable condition, including pushbuttons

CONTROL PUSHBUTTONS

Number of pushbuttons:	7
Operation:	drive FlexLogic operands

USER-PROGRAMMABLE PUSHBUTTONS (OPTIONAL)

Number of pushbuttons:	12 on basic front panel 16 on enhanced horizontal front panel 6 on enhanced vertical front panel
Mode:	self-reset, latched
Display message:	2 lines of 20 characters each
Drop-out timer:	0.00 to 60.00 s in steps of 0.05
Autoreset timer:	0.2 to 600.0 s in steps of 0.1
Hold timer:	0.0 to 10.0 s in steps of 0.1

SELECTOR SWITCH

Number of elements:	2
Upper position limit:	1 to 7 in steps of 1
Selecting mode:	time-out or acknowledge
Time-out timer:	3.0 to 60.0 s in steps of 0.1
Control inputs:	step-up and 3-bit
Power-up mode:	restore from non-volatile memory or synchronize to a 3-bit control input or synch/restore mode

TIME OF DAY TIMERS

Number of timers:	5
Setting resolution:	1 minute

DIGITAL ELEMENTS

Number of elements:	48
Operating signal:	any FlexLogic operand
Pickup delay:	0.000 to 999999.999 s in steps of 0.001
Dropout delay:	0.000 to 999999.999 s in steps of 0.001
Timing accuracy:	±3% or ±4 ms, whichever is greater

2.4.3 MONITORING

OSCILLOGRAPHY

Number of records:	3 to 64, configurable
Sampling rate:	8, 16, 32, or 64 samples per power cycle, configurable
Triggers:	any FlexLogic operand, configurable
Trigger position:	0 to 100%, configurable
Recorded data:	raw AC input channels up to 64 configured digital channels, representing any FlexLogic operand up to 16 configured analog channels, representing any measured analog value
Data storage:	in non-volatile memory
Format:	COMTRADE IEEE C37.111 (1999 or 2013)

EVENT RECORDER

Capacity:	1024 events
Time-tag:	to 1 microsecond
Triggers:	any FlexLogic operand, configurable
Data storage:	in non-volatile memory

USER-PROGRAMMABLE FAULT REPORT

Number of elements:	2
Pre-fault trigger:	any FlexLogic operand
Fault trigger:	any FlexLogic operand
Recorder quantities:	32 (any FlexAnalog™ value)

DATA LOGGER

Number of channels:	1 to 16
Parameters:	any available analog actual value
Sampling rate:	15 to 3600000 ms in steps of 1
Trigger:	any FlexLogic operand
Mode:	continuous or triggered
Storage capacity:	(NN is dependent on memory) 1-second rate: 01 channel for NN days 16 channels for NN days ↓ 60-minute rate: 01 channel for NN days 16 channels for NN days

2.4.4 METERING

RMS CURRENT: PHASE, NEUTRAL, AND GROUND

Accuracy at	
0.1 to 2.0 × CT rating:	±0.25% of reading or ±0.1% of rated (whichever is greater)
> 2.0 × CT rating:	±1.0% of reading

RMS VOLTAGE

Accuracy:	±0.5% of reading from 10 to 208 V

REAL POWER (WATTS)

Accuracy at 0.1 to 1.5 x CT rating and 0.8 to 1.2 x VT rating: ±1.0% of reading at –1.0 ≤ PF< –0.8 and 0.8 < PF ≤ 10

REACTIVE POWER (VARS)

Accuracy at 0.1 to 1.5 x CT rating and 0.8 to 1.2 x VT rating: ±1.0% of reading at –0.2 ≤ PF ≤ 0.2

APPARENT POWER (VA)

Accuracy at 0.1 to 1.5 x CT rating and 0.8 to 1.2 x VT rating: ±1.0% of reading

CURRENT HARMONICS

Harmonics: 2nd to 25th harmonic: per phase, displayed as a % of $I(f_1)$ (current fundamental frequency phasor)
THD: per phase, displayed as a % of $I(f_1)$

Accuracy:
- **HARMONICS:** with $I(f_1)$ 0.4 to 2.0 × CT rating: ±2% of reading or ±1% of 100%, whichever is greater
- **THD:** with $I(f_1)$ from 0.4 to 2.0 × CT rating: ±2% of reading or ±1% of 100% per each harmonic, whichever is greater

Accuracy applies to: 2nd to 25th harmonic including THD with a regular CT/VT module
2nd to 15th harmonic including THD with a HardFiber Process Bus Module (order code 81)

VOLTAGE HARMONICS

Harmonics: 2nd to 25th harmonic: per phase, displayed as a % of $V(f_1)$ (voltage fundamental frequency phasor)
THD: per phase, displayed as a % of $V(f_1)$

Accuracy:
- **HARMONICS:** with $V(f_1)$ 25 to 208 V: ±2% of reading or ±1% of 100%, whichever is greater
- **THD:** with $V(f_1)$ 25 to 208 V: ±2% of reading or ±1% of 100% per each harmonic, whichever is greater

Accuracy applies to: 2nd to 25th harmonic including THD with a regular CT/VT module
2nd to 15th harmonic including THD with a HardFiber Process Bus Module (order code 81)

FREQUENCY

Accuracy for 20 to 65 Hz input at
- V = 0.8 to 1.2 pu: ±0.001 Hz (when voltage signal is used for frequency measurement)
- I = 0.1 to 0.25 pu: ±0.02 Hz (when current signal is used for frequency measurement)
- I > 0.25 pu: ±0.005 Hz (when current signal is used for frequency measurement)

2.4.5 INPUTS

AC CURRENT

CT rated primary: 1 to 50000 A
CT rated secondary: 1 A or 5 A by connection
Relay burden: < 0.2 VA at rated secondary
Conversion range:
Standard CT: 0.02 to 46 × CT rating RMS symmetrical
Current withstand: 20 ms at 250 times rated
1 sec at 100 times rated
continuous 4xInom
Short circuit rating:150000 RMS symmetrical amperes, 250 V maximum (primary current to external CT)

AC VOLTAGE

VT rated secondary: 25.0 to 240.0 V
VT ratio: 1.00 to 24000.00
Relay burden: < 0.25 VA at 120 V
Conversion range: 1 to 275 V
Voltage withstand: continuous at 260 V to neutral
1 min/hr at 420 V to neutral

FREQUENCY

Nominal frequency setting:25 to 60 Hz
Sampling frequency: 64 samples per power cycle
Tracking frequency range:20 to 70 Hz

CONTACT INPUTS

Dry contacts: 1000 Ω maximum
Wet contacts: 300 V DC maximum
Selectable thresholds: 17 V, 33 V, 84 V, 166 V
Tolerance: ±10%
Contacts per common return: 4
Recognition time: < 1 ms
Debounce time: 0.0 to 16.0 ms in steps of 0.5
Continuous current draw:4 mA (when energized)

CONTACT INPUTS WITH AUTO-BURNISHING

Dry contacts: 1000 Ω maximum
Wet contacts: 300 V DC maximum
Selectable thresholds: 17 V, 33 V, 84 V, 166 V
Tolerance: ±10%
Contacts per common return: 2
Recognition time: < 1 ms
Debounce time: 0.0 to 16.0 ms in steps of 0.5
Continuous current draw: 4 mA (when energized)
Auto-burnish impulse current: 50 to 70 mA
Duration of auto-burnish impulse: 25 to 50 ms

DCMA INPUTS

Current input (mA DC): 0 to –1, 0 to +1, –1 to +1, 0 to 5, 0 to 10, 0 to 20, 4 to 20 (programmable)
Input impedance: 379 Ω ±10%
Conversion range: –1 to + 20 mA DC
Accuracy: ±0.2% of full scale
Type: Passive

IRIG-B INPUT

IRIG formats accepted: B000…B007, B120…B127
IRIG control bits: IEEE Std C37.118.1-2011
Amplitude modulation: 1 to 10 V pk-pk
DC shift: TTL–Compatible
Input impedance: 50 kΩ
Isolation: 2 kV

REMOTE INPUTS (IEC 61850 GSSE/GOOSE)

Input points: 32, configured from 64 incoming bit pairs
Remote devices: 16
Default states on loss of comms.: On, Off, Latest/Off, Latest/On
Remote DPS inputs: 5

DIRECT INPUTS

Input points: 32
Remote devices: 16
Default states on loss of comms.: On, Off, Latest/Off, Latest/On
Ring configuration: Yes, No
Data rate: 64 or 128 kbps
CRC: 32-bit
CRC alarm:
  Responding to: Rate of messages failing the CRC
  Monitoring message count: 10 to 10000 in steps of 1
  Alarm threshold: 1 to 1000 in steps of 1
Unreturned message alarm:
  Responding to: Rate of unreturned messages in the ring configuration
  Monitoring message count: 10 to 10000 in steps of 1
  Alarm threshold: 1 to 1000 in steps of 1

2.4.6 POWER SUPPLY

LOW RANGE

Nominal DC voltage: 24 to 48 V
Minimum DC voltage: 20 V
Maximum DC voltage: 60 V for RL power supply module (obsolete), 75 V for SL power supply module
Voltage loss hold-up: 200 ms duration at maximum load
NOTE: Low range is DC only.

HIGH RANGE

Nominal DC voltage: 125 to 250 V
Minimum DC voltage: 88 V
Maximum DC voltage: 300 V
Nominal AC voltage: 100 to 240 V at 50/60 Hz
Minimum AC voltage: 88 V at 25 to 100 Hz
Maximum AC voltage: 265 V at 25 to 100 Hz
Voltage loss hold-up: 200 ms duration at maximum load

ALL RANGES

Volt withstand: 2 × Highest Nominal Voltage for 10 ms
Power consumption: typical = 15 to 20 W/VA
maximum = 45 W/VA
contact factory for exact order code consumption

INTERNAL FUSE

RATINGS
  Low range power supply: 8 A / 250 V
  High range power supply: 4 A / 250 V
INTERRUPTING CAPACITY
  AC: 100 000 A RMS symmetrical
  DC: 10 000 A

2.4.7 OUTPUTS

FORM-A RELAY

Make and carry for 0.2 s: 30 A as per ANSI C37.90
Carry continuous: 6 A

Break (DC inductive, L/R = 40 ms):

VOLTAGE	CURRENT
24 V	1 A
48 V	0.5 A
125 V	0.3 A
250 V	0.2 A

Operate time: < 4 ms
Contact material: silver alloy

LATCHING RELAY

Make and carry for 0.2 s: 30 A as per ANSI C37.90

Carry continuous: 6 A as per IEEE C37.90

Break (DC resistive as per IEC 61810-1):

VOLTAGE	CURRENT
24 V	6 A
48 V	1.6 A
125 V	0.4 A
250 V	0.2 A

Operate time: < 4 ms

Contact material: silver alloy

Control: separate operate and reset inputs

Control mode: operate-dominant or reset-dominant

FORM-A VOLTAGE MONITOR

Applicable voltage: approx. 15 to 250 V DC

Trickle current: approx. 1 to 2.5 mA

FORM-A CURRENT MONITOR

Threshold current: approx. 80 to 100 mA

FORM-C AND CRITICAL FAILURE RELAY

Make and carry for 0.2 s: 30 A as per ANSI C37.90

Carry continuous: 8 A

Break (DC inductive, L/R = 40 ms):

VOLTAGE	CURRENT
24 V	1 A
48 V	0.5 A
125 V	0.3 A
250 V	0.2 A

Operate time: < 8 ms

Contact material: silver alloy

FAST FORM-C RELAY

Make and carry: 0.1 A max. (resistive load)

Minimum load impedance:

INPUT VOLTAGE	IMPEDANCE	
	2 W RESISTOR	1 W RESISTOR
250 V DC	20 KΩ	50 KΩ
120 V DC	5 KΩ	2 KΩ
48 V DC	2 KΩ	2 KΩ
24 V DC	2 KΩ	2 KΩ

Note: values for 24 V and 48 V are the same due to a required 95% voltage drop across the load impedance.

Operate time: < 0.6 ms

Internal Limiting Resistor: 100 Ω, 2 W

SOLID-STATE OUTPUT RELAY

Operate and release time: <100 µs

Maximum voltage: 265 V DC

Maximum leakage current in off state (excluding voltage monitor circuit current): 100 µA

Maximum continuous current: 5 A at 45°C; 4 A at 65°C

Make and carry:

for 0.2 s: 30 A as per ANSI C37.90

for 0.03 s 300 A

Breaking capacity:

	UL508	Utility application (autoreclose scheme)	Industrial application
Operations/ interval	5000 ops / 1 s-On, 9 s-Off	5 ops / 0.2 s-On, 0.2 s-Off within 1 minute	10000 ops / 0.2 s-On, 30 s-Off
	1000 ops / 0.5 s-On, 0.5 s-Off		
Break capability (0 to 250 V DC)	3.2 A L/R = 10 ms	10 A L/R = 40 ms	10 A L/R = 40 ms
	1.6 A L/R = 20 ms		
	0.8 A L/R = 40 ms		

CONTROL POWER EXTERNAL OUTPUT (FOR DRY CONTACT INPUT)

Capacity: 100 mA DC at 48 V DC

Isolation: ±300 Vpk

REMOTE OUTPUTS (IEC 61850 GSSE/GOOSE)

Standard output points: 32

User output points: 32

DIRECT OUTPUTS

Output points: 32

DCMA OUTPUTS

Range: –1 to 1 mA, 0 to 1 mA, 4 to 20 mA

Max. load resistance: 12 kΩ for –1 to 1 mA range
12 kΩ for 0 to 1 mA range
600 Ω for 4 to 20 mA range

Accuracy: ±0.75% of full-scale for 0 to 1 mA range
±0.5% of full-scale for –1 to 1 mA range
±0.75% of full-scale for 0 to 20 mA range

99% Settling time to a step change: 100 ms

Isolation: 1.5 kV

Driving signal: any FlexAnalog quantity

Upper and lower limit for the driving signal: –90 to 90 pu in steps of 0.001

2.4.8 COMMUNICATION PROTOCOLS

RS232

Front port: 19.2 kbps, Modbus RTU

RS485

1 rear port: Up to 115 kbps, Modbus RTU, DNP 3, IEC 60870-5-103

Typical distance: 1200 m

Isolation: 2 kV, isolated together at 36 Vpk

FIBER ETHERNET PORT

Operates with 50/125 µm and 62.5/125 µm multimode fiber

PARAMETER	FIBER TYPE
	100 MB MULTI-MODE
Wavelength	1310 nm
Connector	LC
Transmit power	–20 dBm
Receiver sensitivity	–30 dBm
Power budget	10 dB
Maximum input power	–14 dBm
Typical distance	2 km
Full duplex	yes
Redundancy	yes

ETHERNET (10/100 MB TWISTED PAIR)

Modes: 10 MB, 10/100 MB (auto-detect)

Connector: RJ45

SIMPLE NETWORK TIME PROTOCOL (SNTP)

clock synchronization error: <10 ms (typical)

PRECISION TIME PROTOCOL (PTP)

PTP IEEE Std 1588-2008 (version 2)

Power Profile (PP) per IEEE Standard PC37.238-2011

Slave-only ordinary clock

Peer delay measurement mechanism

PARALLEL REDUNDANCY PROTOCOL (PRP) (IEC 62439-3 CLAUSE 4, 2012)

Ethernet ports used: 2 and 3

Networks supported: 10/100 MB Ethernet

OTHER

TFTP, HTTP, IEC 60870-5-104, Ethernet Global Data (EGD)

2.4.9 INTER-RELAY COMMUNICATIONS

SHIELDED TWISTED-PAIR INTERFACE OPTIONS

INTERFACE TYPE	TYPICAL DISTANCE
RS422	1200 m
G.703	100 m

NOTE RS422 distance is based on transmitter power and does not take into consideration the clock source provided by the user.

LINK POWER BUDGET AND MAXIMUM OPTICAL INPUT POWER

The following specifications apply to filter interface modules implemented from January 2012.

EMITTER, FIBER TYPE	CABLE TYPE	TRANSMIT POWER	RECEIVED SENSITIVITY	POWER BUDGET	MAXIMUM OPTICAL INPUT POWER
820 nm, Multimode	62.5/125 µm	-16 dBm	-32 dBm	16 dBm	-8 dBm
	50/125 µm	-20 dBm		12 dBm	
1300 nm, Multimode	62.5/125 µm	-16 dBm	-32 dBm	16 dBm	-8 dBm
	50/125 µm	-20 dBm		12 dBm	
1300 nm, Single mode		-15 dBm	-32 dBm	17 dBm	-8 dBm
1300 nm Laser, Single mode		0 dBm	-34 dBm	34 dBm	-8 dBm
1550 nm Laser, Single mode		5 dBm	-34 dBm	39 dBm	-10 dBm

The following specifications apply to filter interface modules implemented before January 2012.

EMITTER, FIBER TYPE	TRANSMIT POWER	RECEIVED SENSITIVITY	POWER BUDGET	MAX. OPTICAL INPUT POWER
820 nm LED, Multimode	–20 dBm	–30 dBm	10 dB	–7.6 dBm
1300 nm LED, Multimode	–21 dBm	–30 dBm	9 dB	–11 dBm
1300 nm ELED, Single mode	–23 dBm	–32 dBm	9 dB	–14 dBm
1300 nm Laser, Single mode	–1 dBm	–30 dBm	29 dB	–14 dBm
1550 nm Laser, Single mode	+5 dBm	–30 dBm	35 dB	–14 dBm

NOTE These power budgets are calculated from the manufacturer's worst-case transmitter power and worst case receiver sensitivity.

NOTE The power budgets for the 1300 nm ELED are calculated from the manufacturer's transmitter power and receiver sensitivity at ambient temperature. At extreme temperatures these values deviate based on component tolerance. On average, the output power decreases as the temperature is increased by a factor 1dB / 5°C.

TYPICAL LINK DISTANCE

EMITTER TYPE	CABLE TYPE	CONNECTOR TYPE	TYPICAL DISTANCE	
			BEFORE JANUARY 2012	FROM JANUARY 2012
820 nm LED, multimode	62.5/125 µm	ST	1.65 km	2 km
	50/125 µm	ST	1.65 km	2 km
1300 nm LED, multimode	62.5/125 µm	ST	4 km	5 km
	50/125 µm	ST	4 km	5 km

NOTE Typical distances listed are based on the following assumptions for system loss. As actual losses vary from one installation to another, the distance covered by your system may vary.

CONNECTOR LOSSES (TOTAL OF BOTH ENDS)

ST connector 0.7 dB (each)

FIBER LOSSES

820 nm multimode 3 dB/km

1300 nm multimode 1 dB/km

1300 nm single mode 0.35 dB/km

Splice losses: One splice every 2 km, at 0.05 dB loss per splice.

SYSTEM MARGIN

3 dB additional loss added to calculations to compensate for all other losses.

Compensated difference in transmitting and receiving (channel asymmetry) channel delays using GPS satellite clock: 10 ms

2.4.10 ENVIRONMENTAL

AMBIENT TEMPERATURES

Maximum operating range: –40 to 85°C

Continuous operating range: –40 to 60°C[1]

1 Based on IEC 60068-2-1 and IEC 60068-2-2, Variant Bd and Ad for 16 hrs. The UR can operate up to a surrounding ambient of 85°C, however operating outside the recommended continuous temperature range for extended periods can result in MTBF degradation and decrease the response time of the LCD.

HUMIDITY

Humidity: operating up to 95% (non-condensing) at 55°C (as per IEC60068-2-30 variant 1, 6 days).

OTHER

Altitude:	2000 m (maximum)
Pollution degree:	II
Overvoltage category:	II
Ingress protection:	IP20 front, IP10 back (basic front panel and Rev. 1 enhanced front panel) IP40 front, IP10 back (Rev. 2 enhanced front panel) IP54 front with IP54 mounting collar accessory (Rev. 2 enhanced front panel)
Noise:	0 dB

2.4.11 TYPE TESTS

C70 TYPE TESTS

TEST	REFERENCE STANDARD	TEST LEVEL
Dielectric voltage withstand	EN 60255-5	2.2 kV
Impulse voltage withstand	EN 60255-5	5 kV
Damped oscillatory	IEC 61000-4-18 / IEC 60255-22-1	2.5 kV CM, 1 kV DM
Electrostatic discharge	EN 61000-4-2 / IEC 60255-22-2	Level 3
RF immunity	EN 61000-4-3 / IEC 60255-22-3	Level 3
Fast transient disturbance	EN 61000-4-4 / IEC 60255-22-4	Class A and B
Surge immunity	EN 61000-4-5 / IEC 60255-22-5	Level 3 and 4
Conducted RF immunity	EN 61000-4-6 / IEC 60255-22-6	Level 3
Power frequency immunity	EN 61000-4-7 / IEC 60255-22-7	Class A and B
Voltage interruption and ripple DC	IEC 60255-11	12% ripple, 200 ms interrupts
Radiated and conducted emissions	CISPR11 / CISPR22 / IEC 60255-25	Class A
Sinusoidal vibration	IEC 60255-21-1	Class 1
Shock and bump	IEC 60255-21-2	Class 1
Seismic	IEC 60255-21-3	Class 1
Power magnetic immunity	IEC 61000-4-8	Level 5
Pulse magnetic immunity	IEC 61000-4-9	Level 4
Damped magnetic immunity	IEC 61000-4-10	Level 4
Voltage dip and interruption	IEC 61000-4-11	0, 40, 70, 80% dips; 250 / 300 cycle interrupts
Damped oscillatory	IEC 61000-4-12	2.5 kV CM, 1 kV DM
Conducted RF immunity, 0 to 150 kHz	IEC 61000-4-16	Level 4
Voltage ripple	IEC 61000-4-17	15% ripple
Ingress protection	IEC 60529	IP20 front, IP10 back
Cold	IEC 60068-2-1	–40°C for 16 hours
Hot	IEC 60068-2-2	85°C for 16 hours
Humidity	IEC 60068-2-30	6 days, variant 1
Damped oscillatory	IEEE/ANSI C37.90.1	2.5 kV, 1 MHz
RF immunity	IEEE/ANSI C37.90.2	20 V/m, 80 MHz to 1 GHz
Safety	UL 508	e83849 NKCR
Safety	UL C22.2-14	e83849 NKCR7
Safety	UL 1053	e83849 NKCR
Safety	IEC 60255-27	Insulation: class 1, Pollution degree: 2, Over voltage cat II

2.4.12 PRODUCTION TESTS

THERMAL

Products go through an environmental test based upon an Accepted Quality Level (AQL) sampling process.

2.4.13 APPROVALS

APPROVALS

COMPLIANCE	APPLICABLE COUNCIL DIRECTIVE	ACCORDING TO
CE	Low voltage directive	EN 60255-5
	EMC directive	EN 60255-26 / EN 50263
		EN 61000-6-5
C-UL-US	---	UL 508
		UL 1053
		C22.2 No. 14

2.4.14 MAINTENANCE

MOUNTING

Attach mounting brackets using 20 inch-pounds (±2 inch-pounds) of torque.

CLEANING

Normally, cleaning is not required; but for situations where dust has accumulated on the faceplate display, a dry cloth can be used.

NOTICE

To avoid deterioration of electrolytic capacitors, power up units that are stored in a de-energized state once per year, for one hour continuously.

a) HORIZONTAL UNITS

The C70 Capacitor Bank Protection and Control System is available as a 19-inch rack horizontal mount unit with a removable faceplate. The faceplate can be specified as either basic or enhanced at the time of ordering. The enhanced faceplate contains additional user-programmable pushbuttons and LED indicators.

The modular design allows the relay to be easily upgraded or repaired by a qualified service person. The faceplate is hinged to allow easy access to the removable modules, and is itself removable to allow mounting on doors with limited rear depth.

In November 2017, GE began transitioning to Rev. 2 of the enhanced horizontal front panel. This panel can be identified by the use of a screw instead of a knob to close the panel. It can conform to an IP54 rating with the IP54 mounting collar purchased separately. The IP54 mounting collar can be used in panel-mount installations, not 19-inch rack-mount installations. The IP54 mounting collar cannot be used with Rev. 1 enhanced front panels.

The case dimensions are shown below, along with panel cutout details for panel mounting. When planning the location of your panel cutout, ensure that provision is made for the faceplate to swing open without interference to or from adjacent equipment.

The relay must be mounted such that the faceplate sits semi-flush with the panel or switchgear door, allowing the operator access to the keypad and the RS232 communications port. The relay is secured to the panel with the use of four screws supplied with the relay.

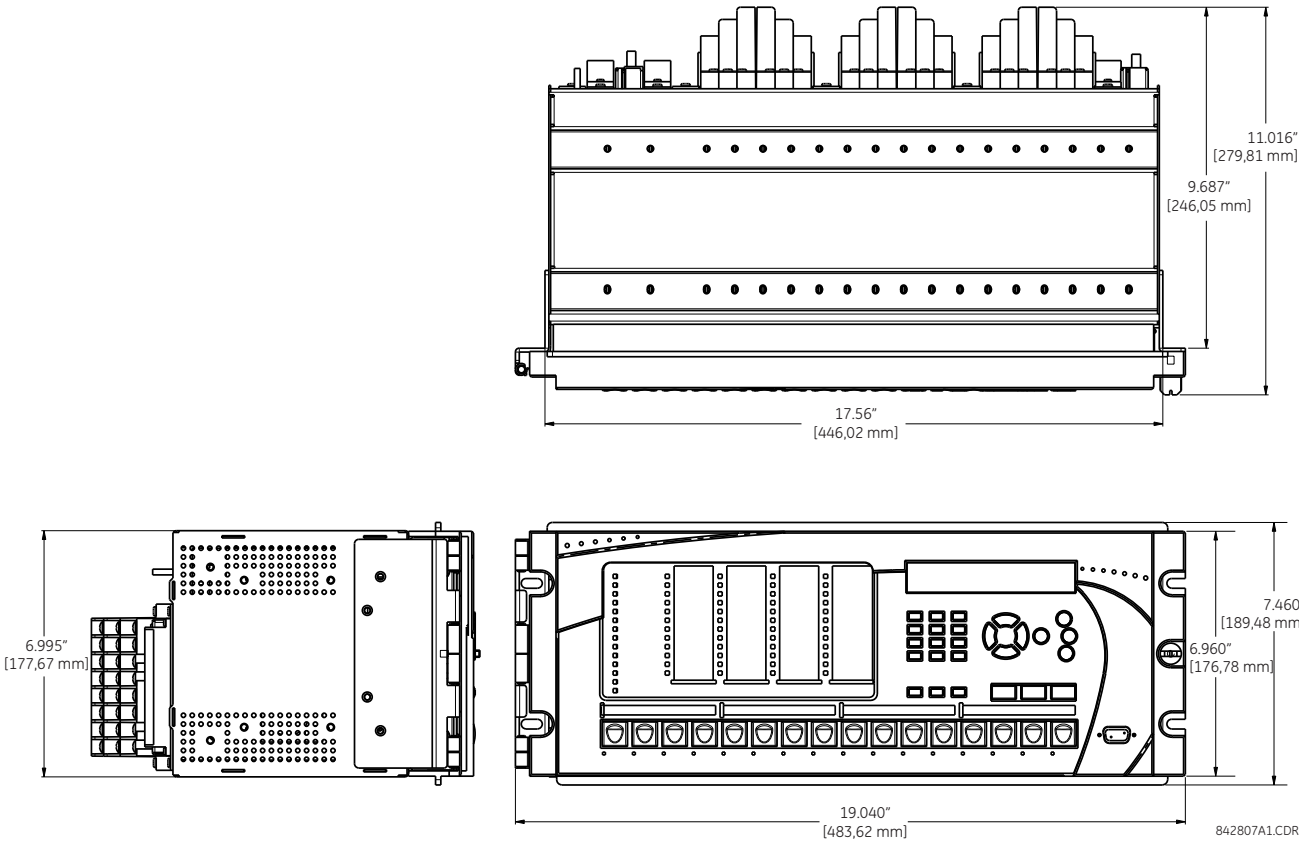

Figure 3–1: HORIZONTAL DIMENSIONS (REV. 1 ENHANCED FRONT PANEL)

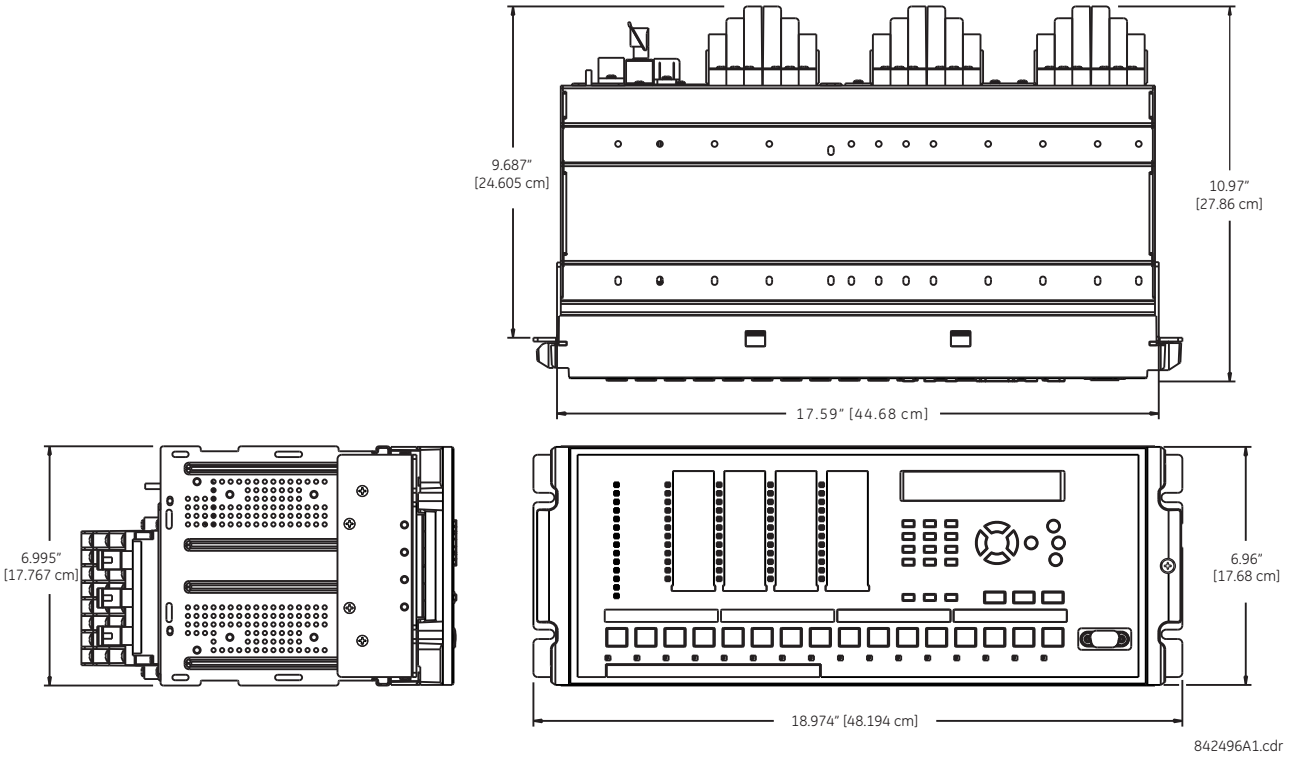

Figure 3–2: HORIZONTAL DIMENSIONS (REV. 2 ENHANCED FRONT PANEL)

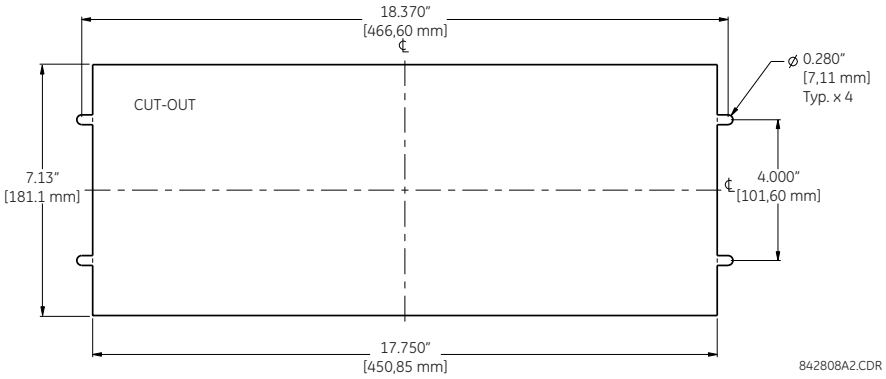

Figure 3–3: HORIZONTAL MOUNTING (ENHANCED FRONT PANEL)

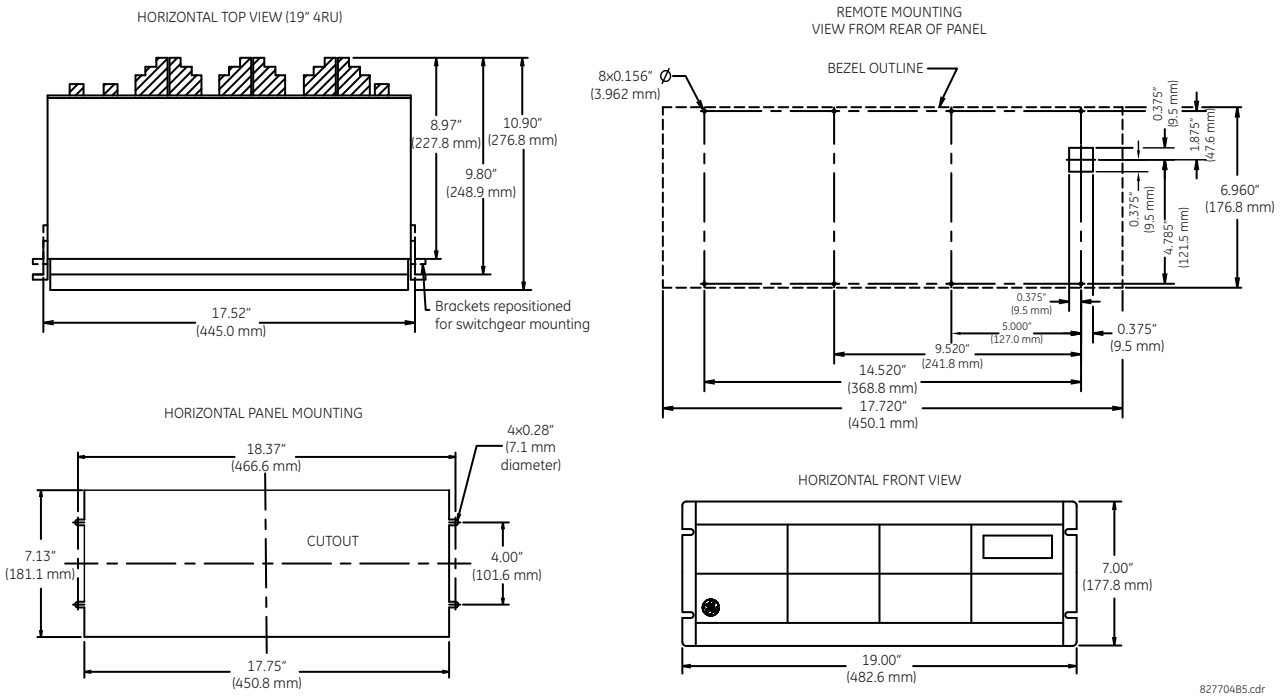

Figure 3–4: HORIZONTAL DIMENSIONS (BASIC FRONT PANEL)

b) VERTICAL UNITS

The C70 Capacitor Bank Protection and Control System is available as a reduced size (¾) vertical mount unit, with a removable faceplate. The faceplate can be specified as either basic or enhanced at the time of ordering. The enhanced faceplate contains additional user-programmable pushbuttons and LED indicators.

The modular design allows the relay to be easily upgraded or repaired by a qualified service person. The faceplate is hinged to allow easy access to the removable modules, and is itself removable to allow mounting on doors with limited rear depth.

The case dimensions are shown below, along with panel cutout details for panel mounting. When planning the location of your panel cutout, ensure that provision is made for the faceplate to swing open without interference to or from adjacent equipment.

The relay must be mounted such that the faceplate sits semi-flush with the panel or switchgear door, allowing the operator access to the keypad and the RS232 communications port. The relay is secured to the panel with the use of four screws supplied with the relay.

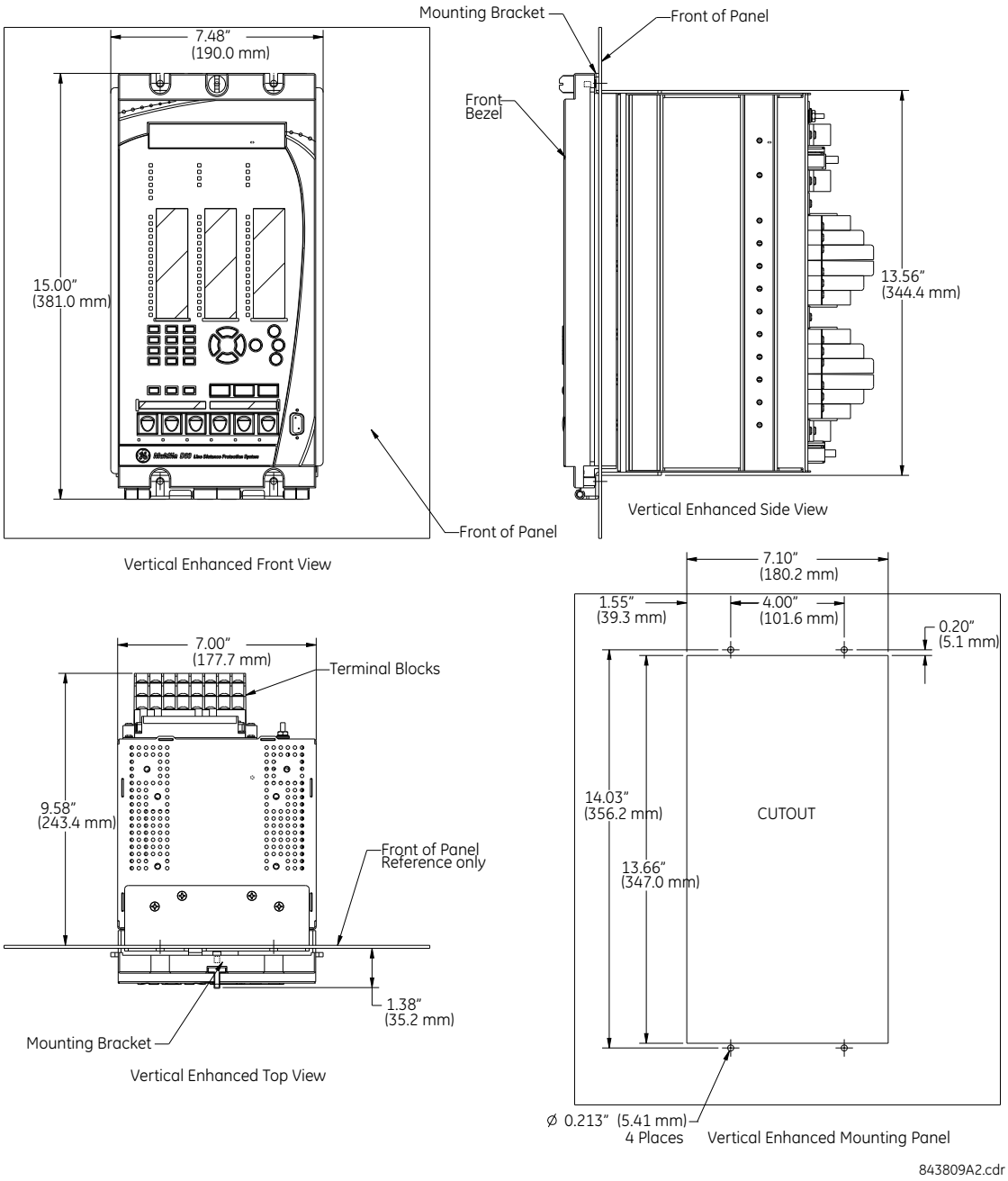

Figure 3–5: C70 VERTICAL DIMENSIONS (ENHANCED PANEL)

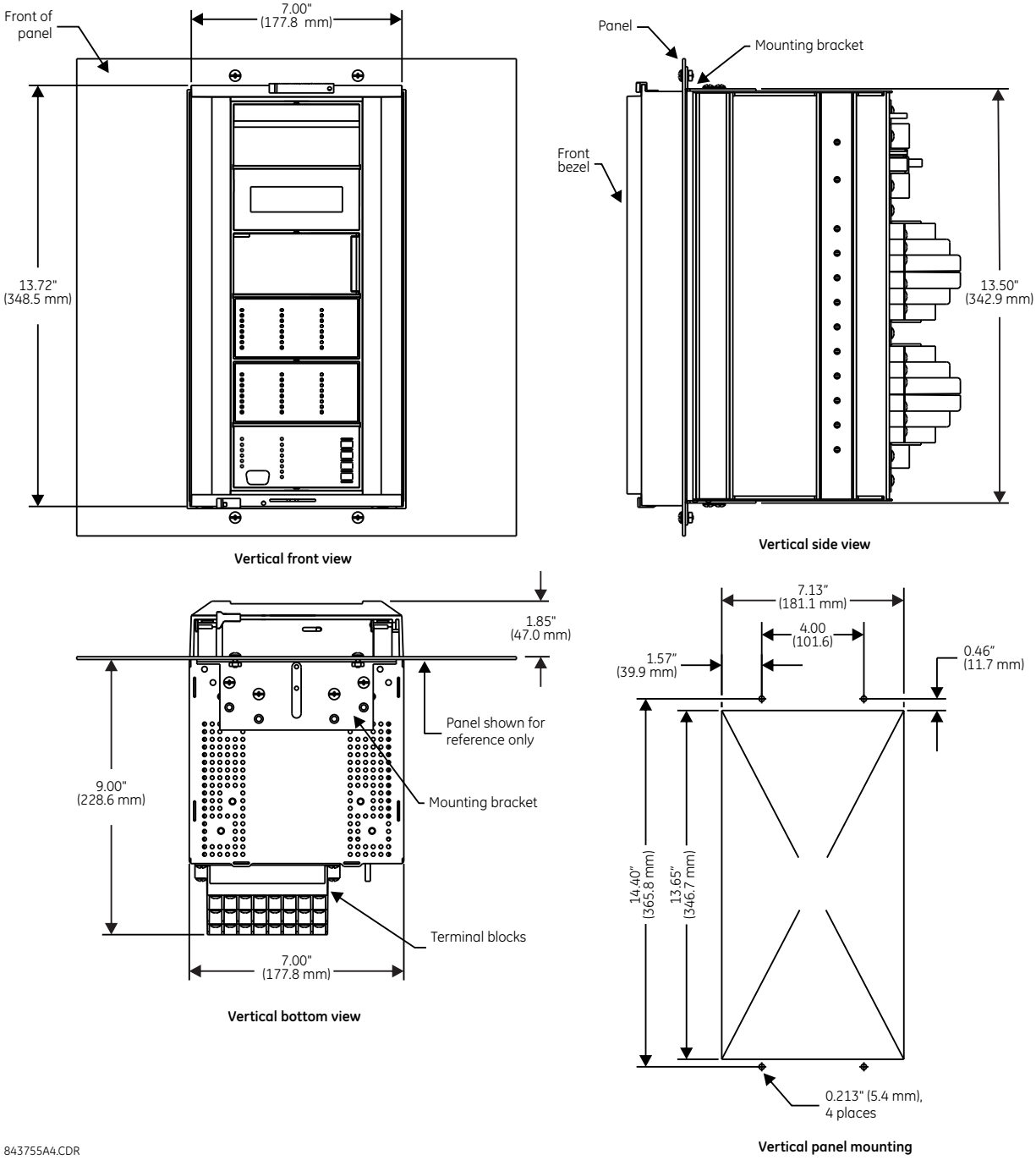

Figure 3–6: C70 VERTICAL MOUNTING AND DIMENSIONS (BASIC PANEL)

For side mounting C70 devices with the enhanced front panel, see the following documents available on the UR DVD and the GE Grid Solutions website:

- GEK-113180: UR-Series UR-V Side-Mounting Front Panel Assembly Instructions
- GEK-113181: Connecting a Remote UR-V Enhanced Front Panel to a Vertical UR Device Instruction Sheet
- GEK-113182: Connecting a Remote UR-V Enhanced Front Panel to a Vertically-Mounted Horizontal UR Device Instruction Sheet

For side mounting C70 devices with the basic front panel, use the following figures.

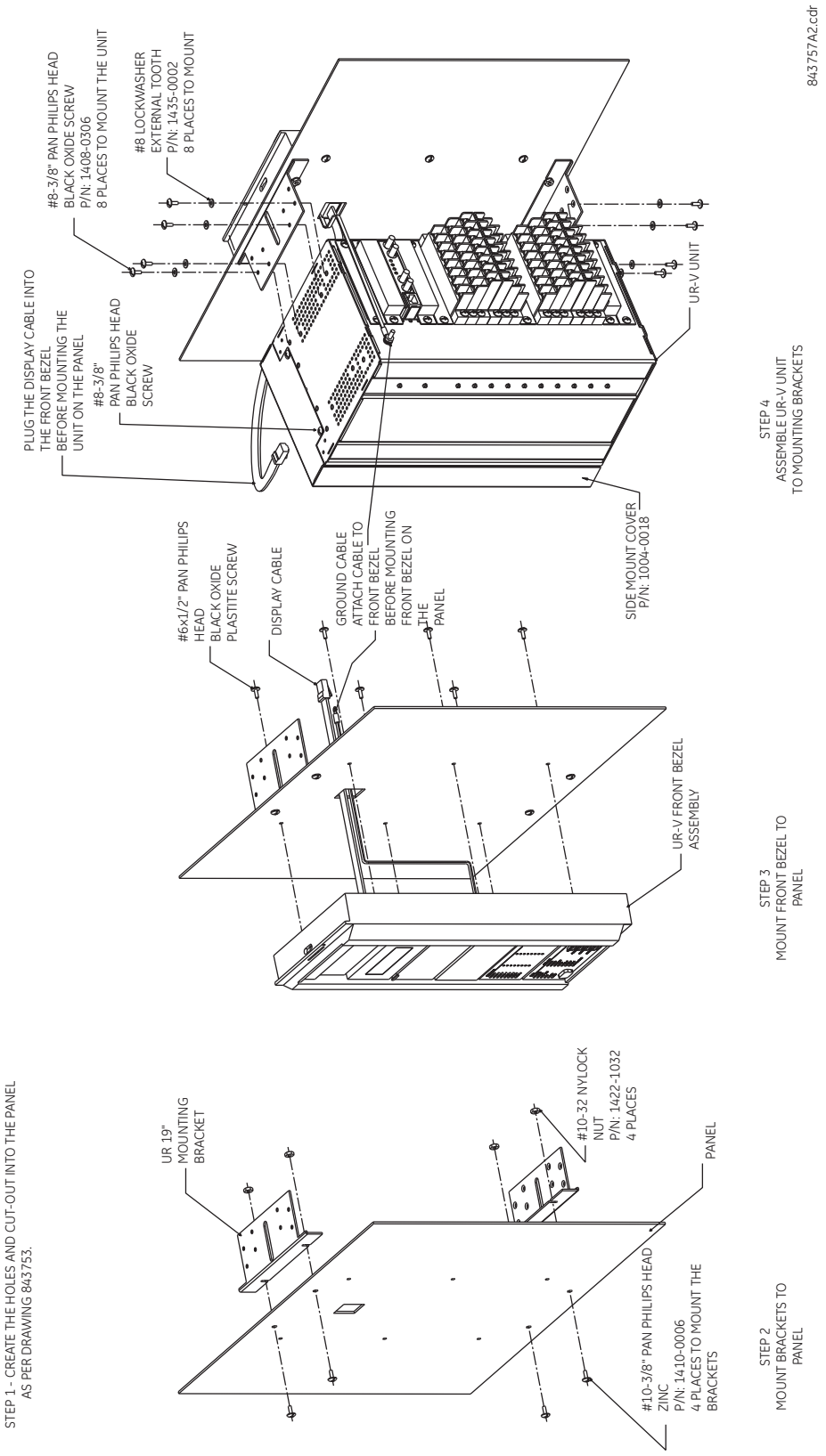

Figure 3–7: C70 VERTICAL SIDE MOUNTING INSTALLATION (BASIC PANEL)

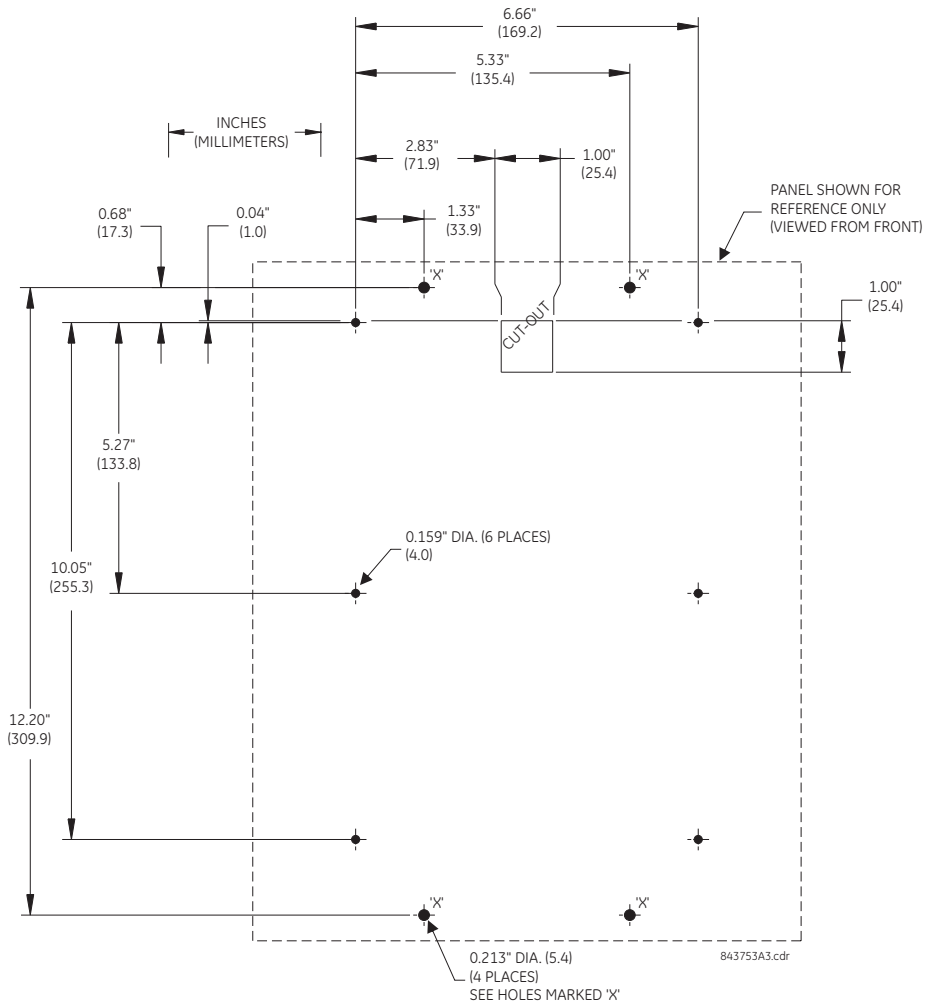

Figure 3–8: C70 VERTICAL SIDE MOUNTING REAR DIMENSIONS (BASIC PANEL)

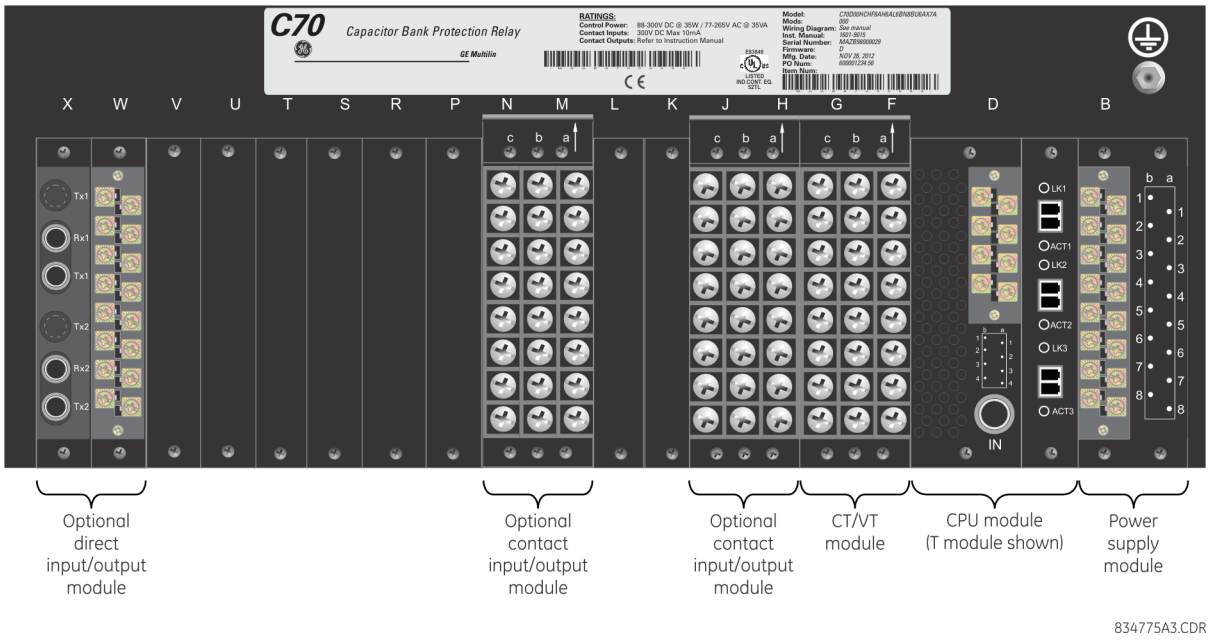

Figure 3–9: REAR TERMINAL VIEW

WARNING

Do not touch any rear terminals while the relay is energized.

NOTICE

The small form-factor pluggable ports (SFPs) are pluggable transceivers. Do not use non-validated transceivers or install validated transceivers in the wrong Ethernet slot, else damage can occur.

The relay follows a convention with respect to terminal number assignments which are three characters long assigned in order by module slot position, row number, and column letter. Two-slot wide modules take their slot designation from the first slot position (nearest to CPU module) which is indicated by an arrow marker on the terminal block. See the following figure for an example of rear terminal assignments.

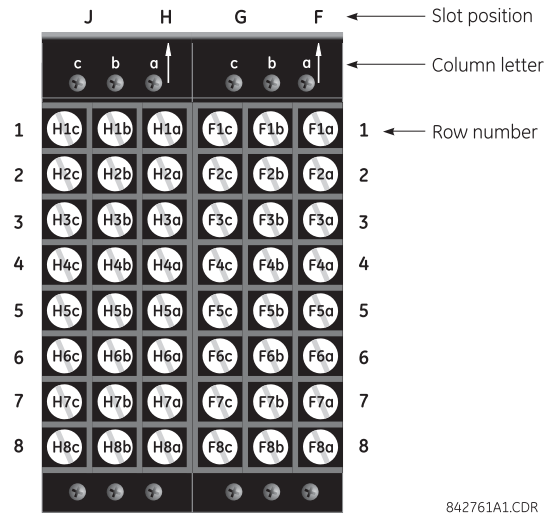

Figure 3–10: EXAMPLE OF MODULES IN F AND H SLOTS

The torque used to connect the terminal blocks to the back of the relay chassis (screws a, b, c shown) is 9 inch-pounds. For the connections to the terminal blocks (rows 1 to 8), use a minimum of 17 inch-pounds. During manufacturing, the power supply and CPU modules are installed in slots B and D of the chassis with 13 inch-pounds of torque on the screws at the top and bottom of the modules.

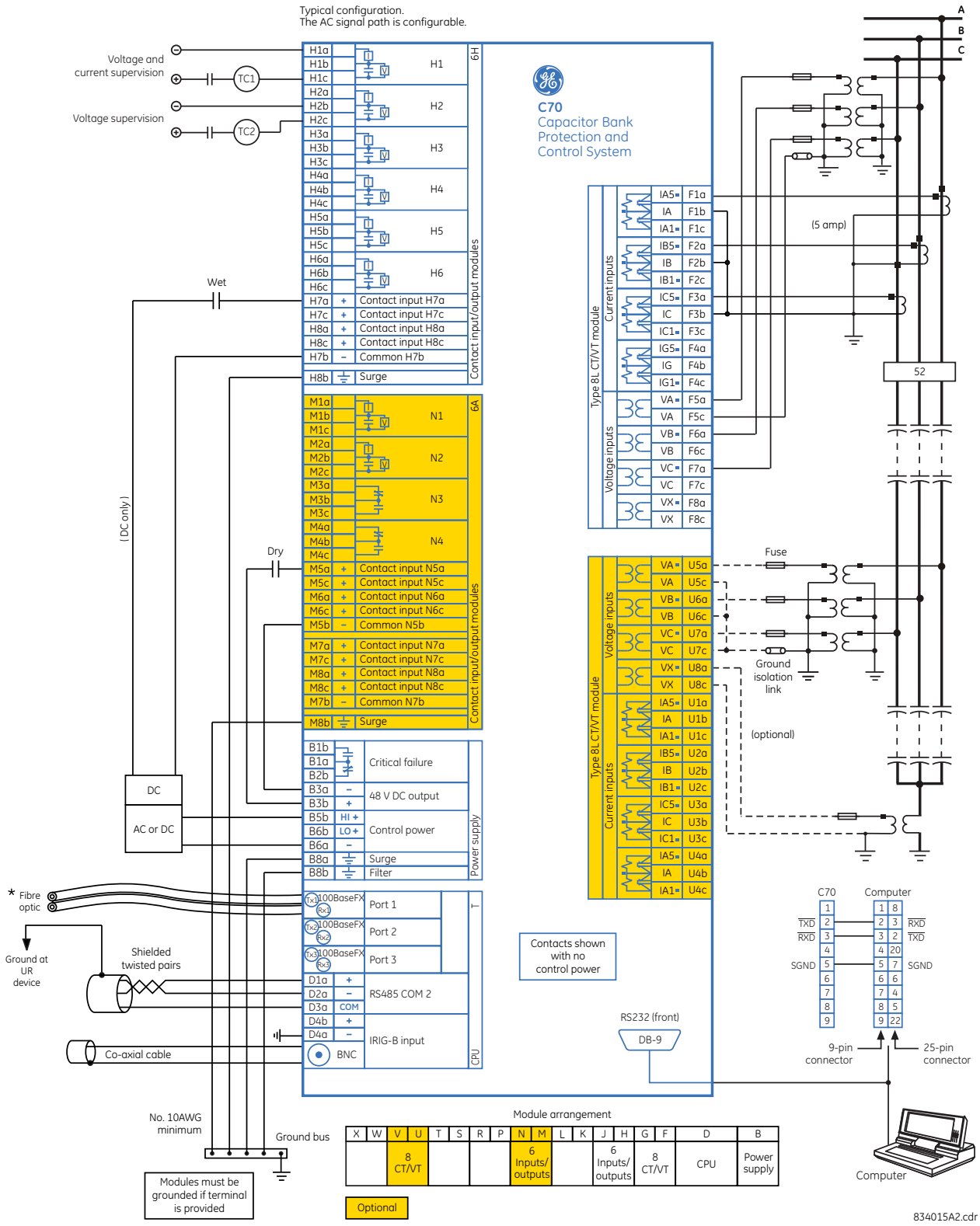

Figure 3–11: TYPICAL WIRING DIAGRAM (T MODULE SHOWN FOR CPU)

3.2.2 DIELECTRIC STRENGTH

The dielectric strength of the UR-series module hardware is shown in the following table:

Table 3–1: DIELECTRIC STRENGTH OF UR-SERIES MODULE HARDWARE

MODULE TYPE	MODULE FUNCTION	TERMINALS		DIELECTRIC STRENGTH (AC)
		FROM	TO	
1	Power supply	High (+); Low (+); (–)	Chassis	2000 V AC for 1 minute
1	Power supply	48 V DC (+) and (–)	Chassis	2000 V AC for 1 minute
1	Power supply	Relay terminals except terminals 8a and 8b	Chassis	2000 V AC for 1 minute
2	Reserved	N/A	N/A	N/A
3	Reserved	N/A	N/A	N/A
4	Digital contact inputs/ outputs	All	Chassis	2000 V AC for 1 minute
5	Analog inputs/outputs	All except 8b	Chassis	< 50 V DC
6	Digital contact inputs/ outputs	All	Chassis	2000 V AC for 1 minute
7	G.703	All except 2b, 3a, 7b, 8a	Chassis	2000 V AC for 1 minute
	RS422	All except 6a, 7b, 8a	Chassis	< 50 V DC
8	CT/VT	All	Chassis	2000 V AC for 1 minute
9	CPU	All	Chassis	2000 V AC for 1 minute

NOTICE

Filter networks and transient protection clamps are used in the hardware to prevent damage caused by high peak voltage transients, radio frequency interference (RFI), and electromagnetic interference (EMI). These protective components can be damaged by application of the ANSI/IEEE C37.90 specified test voltage for a period longer than the specified one minute.

3.2.3 CONTROL POWER

NOTICE

Control power supplied to the relay must be connected to the matching power supply range of the relay. If voltage is applied to the wrong terminals, damage can occur.

The C70 relay, like almost all electronic relays, contains electrolytic capacitors. These capacitors are well-known to deteriorate over time if voltage is not applied periodically. Deterioration can be avoided by powering up the relay at least once a year.

The power supply module can be ordered for two possible voltage ranges, and the UR can be ordered with or without a redundant power supply module option. Each range has a dedicated input connection for proper operation. The ranges are as shown below (see the Specifications section of chapter 2 for details):

- Low (LO) range: 24 to 48 V (DC only) nominal.
- High (HI) range: 125 to 250 V nominal.

The power supply module provides power to the relay and supplies power for dry contact input connections.

The power supply module provides 48 V DC power for dry contact input connections and a critical failure relay (see the Typical Wiring Diagram earlier). The critical failure relay is a form-C device that is energized once control power is applied and the relay has successfully booted up with no critical self-test failures. If on-going self-test diagnostic checks detect a critical failure (see the Self-Test Errors section in chapter 7) or control power is lost, the relay is de-energize.

For high reliability systems, the C70 has a redundant option in which two C70 power supplies are placed in parallel on the bus. If one of the power supplies become faulted, the second power supply assumes the full load of the relay without any interruptions. Each power supply has a green LED on the front of the module to indicate it is functional. The critical fail relay of the module also indicates a faulted power supply.

An LED on the front of the control power module shows the status of the power supply:

LED INDICATION	POWER SUPPLY
CONTINUOUS ON	OK
ON / OFF CYCLING	Failure
OFF	Failure

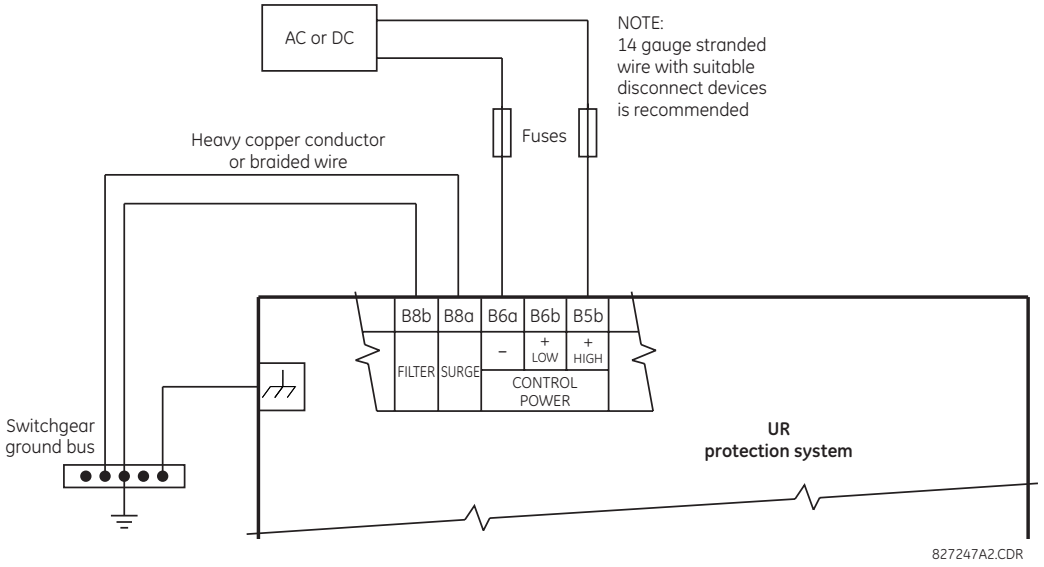

Figure 3–12: CONTROL POWER CONNECTION

a) NON-VOLATILE DATA STORAGE

Non-volatile data is temporary data required after a power cycle for relay state, such as latch status before reboot. The relay saves this data in non-volatile storage every two minutes or when a state change occurs.

If a state change occurs just before a power down (less than two minutes) and the relay power is cycled, some temporary data can be saved and the prior state is retained at power up. Otherwise, a two-minute powered on period after a state change ensures that all temporary state changes required after reboot have been saved. A command also is available to initiate saving of data in the compact flash memory using **Commands > Relay Maintenance > Save Volatile Data**.

3.2.4 CT/VT MODULES

A CT/VT module can have voltage or current inputs on channels 1 through 4 inclusive, or channels 5 through 8 inclusive. Channels 1 and 5 are intended for connection to phase A, and are labeled as such in the relay. Likewise, channels 2 and 6 are intended for connection to phase B, and channels 3 and 7 are intended for connection to phase C.

Channels 4 and 8 are intended for connection to a single-phase source. For voltage inputs, these channel are labelled as auxiliary voltage (VX). For current inputs, these channels are intended for connection to a CT between system neutral and ground, and are labelled as ground current (IG).

NOTICE Verify that the connection made to the relay terminals for nominal current of 1 A or 5 A matches the secondary rating of the connected CTs. Unmatched CTs can result in equipment damage or inadequate protection.

To connect the module, size 12 American Wire Gauge (AWG) is commonly used; the maximum size is 10 AWG.

CT/VT modules can be ordered with a standard ground current input that is the same as the phase current input. Each AC current input has an isolating transformer and an automatic shorting mechanism that shorts the input when the module is withdrawn from the chassis. There are no internal ground connections on the current inputs. Current transformers with 1 to 50000 A primaries and 1 A or 5 A secondaries can be used.

The above modules have enhanced diagnostics that can automatically detect CT/VT hardware failure and take the relay out of service.

CT connections for both ABC and ACB phase rotations are identical as shown in the Typical Wiring Diagram.

The exact placement of a zero-sequence core balance CT to detect ground fault current is shown as follows. Twisted-pair cabling on the zero-sequence CT is recommended.

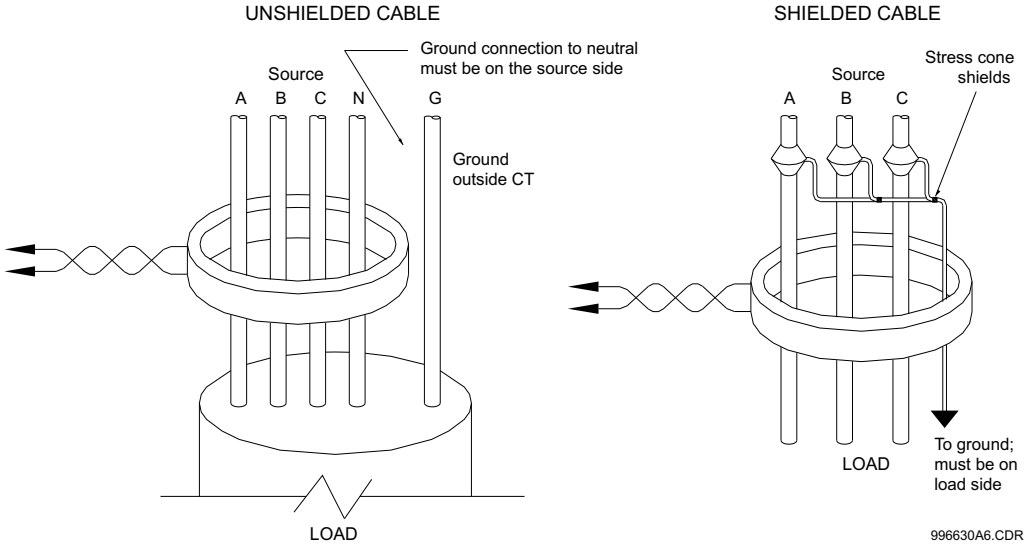

Figure 3–13: ZERO-SEQUENCE CORE BALANCE CT INSTALLATION

The phase voltage channels are used for most metering and protection purposes. The auxiliary voltage channel is used as input for the synchrocheck and volts-per-hertz features.

NOTE

Substitute the tilde "~" symbol with the slot position of the module in the following figure.

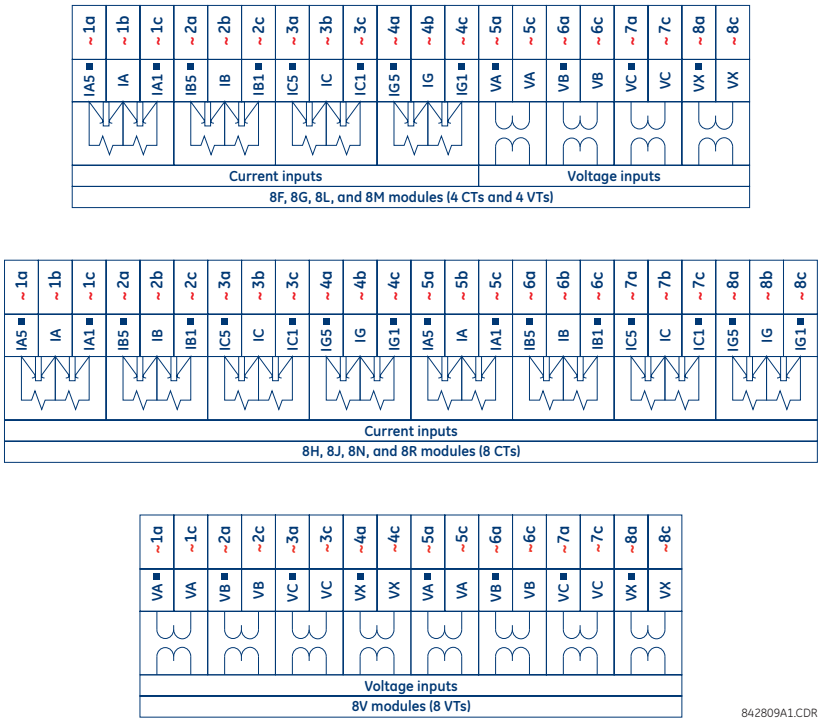

Figure 3–14: CT/VT MODULE WIRING

3.2.5 PROCESS BUS MODULES

The C70 can be ordered with a process bus interface module. This module is designed to interface with the GE Multilin HardFiber system, allowing bidirectional IEC 61850 fiber optic communications with up to eight HardFiber merging units, known as Bricks. The HardFiber system has been designed to integrate seamlessly with the existing UR-series applications, including protection functions, FlexLogic, metering, and communications.

The IEC 61850 process bus system offers the following benefits:

- Reduces labor associated with design, installation, and testing of protection and control applications using the C70 by reducing the number of individual copper terminations
- Integrates seamlessly with existing C70 applications, since the IEC 61850 process bus interface module replaces the traditional CT/VT modules
- Communicates using open standard IEC 61850 messaging

For additional details on the HardFiber system, see GE publication GEK-113658: HardFiber Process Bus System Instruction Manual.

3.2.6 CONTACT INPUTS AND OUTPUTS

Every contact input/output module has 24 terminal connections. They are arranged as three terminals per row, with eight rows in total. A given row of three terminals can be used for the outputs of one relay. For example, for form-C relay outputs, the terminals connect to the normally open (NO), normally closed (NC), and common contacts of the relay. For a form-A output, there are options of using current or voltage detection for feature supervision, depending on the module ordered. The terminal configuration for contact inputs is different for the two applications.

The contact inputs are grouped with a common return. The input/output modules have two versions of grouping: four inputs per common return and two inputs per common return. When a contact input/output module is ordered, four inputs per common is used. If the inputs must be isolated per row, then two inputs per common return should be selected (4D module).

The tables and diagrams on the following pages illustrate the module types (6A, etc.) and contact arrangements that can be ordered for the relay. Since an entire row is used for a single contact output, the name is assigned using the module slot position and row number. However, since there are two contact inputs per row, these names are assigned by module slot position, row number, and column position.

Some form-A / solid-state relay outputs include circuits to monitor the DC voltage across the output contact when it is open, and the DC current through the output contact when it is closed. Each of the monitors contains a level detector whose output is set to logic “On” when the current in the circuit is above the threshold setting. The voltage monitor is set to “On” when there is a voltage across open contact (the detector allows a current of about 1 to 2.5 mA), and the current monitor is set to “On” when the current flowing through the closed contact exceeds about 80 to 100 mA. The voltage monitor is intended to check the health of the overall trip circuit, and the current monitor can be used to seal-in the output contact until an external contact has interrupted current flow. If enabled, the current monitoring can be used as a seal-in signal to ensure that the form-A contact does not attempt to break the energized inductive coil circuit and weld the output contacts.

Block diagrams are shown as follows for form-A and solid-state relay outputs with optional voltage monitor, optional current monitor, and with no monitoring. The actual values shown for contact output 1 are the same for all contact outputs. Form-A contact output with or without a current or voltage monitoring option is not polarity sensitive. The polarity shown in the figure is required for solid-state contact output connection.

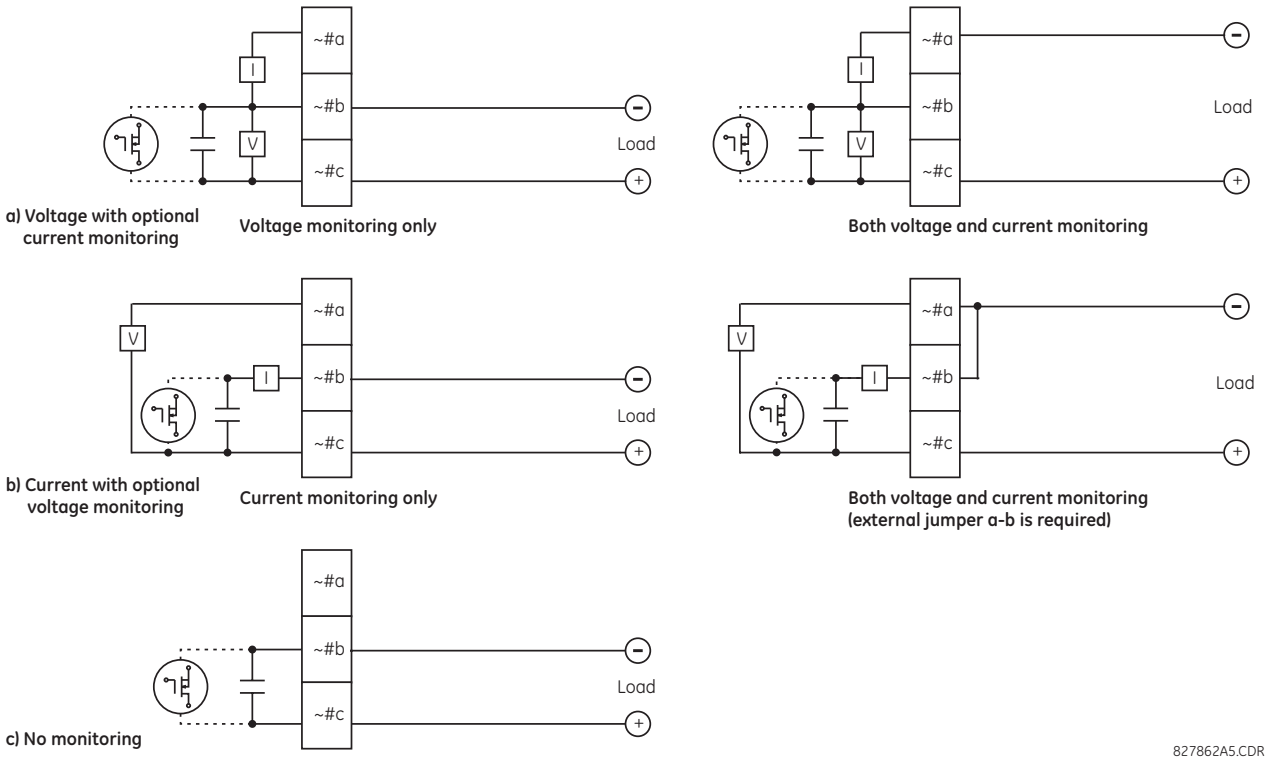

Figure 3–15: FORM-A AND SOLID-STATE CONTACT OUTPUTS WITH VOLTAGE AND CURRENT MONITORING

The operation of voltage and current monitors is reflected with the corresponding FlexLogic operands (CONT OP # VON, CONT OP # VOFF, and CONT OP # ION) which can be used in protection, control, and alarm logic. The typical application of the voltage monitor is breaker trip circuit integrity monitoring; a typical application of the current monitor is seal-in of the control command.

See the Digital Elements section of chapter 5 for an example of how form-A and solid-state relay contacts can be applied for breaker trip circuit integrity monitoring.

WARNING **Consider relay contacts unsafe to touch when the unit is energized.**

NOTE **USE OF FORM-A AND SOLID-STATE RELAY OUTPUTS IN HIGH IMPEDANCE CIRCUITS**

For form-A and solid-state relay output contacts internally equipped with a voltage measuring circuit across the contact, the circuit has an impedance that can cause a problem when used in conjunction with external high input impedance monitoring equipment such as modern relay test set trigger circuits. These monitoring circuits may continue to read the form-A contact as being closed after it has closed and subsequently opened, when measured as an impedance.

The solution is to use the voltage measuring trigger input of the relay test set, and connect the form-A contact through a voltage-dropping resistor to a DC voltage source. If the 48 V DC output of the power supply is used as a source, a 500 Ω, 10 W resistor is appropriate. In this configuration, the voltage across either the form-A contact or the resistor can be used to monitor the state of the output.

NOTE Wherever a tilde "~" symbol appears, substitute with the slot position of the module; wherever a number sign "#" appears, substitute the contact number.

NOTICE When current monitoring is used to seal-in the form-A and solid-state relay contact outputs, the FlexLogic operand driving the contact output should be given a reset delay of 10 ms to prevent damage of the output contact (in situations when the element initiating the contact output is bouncing, at values in the region of the pickup value).

Table 3–2: CONTACT INPUT AND OUTPUT MODULE ASSIGNMENTS

~6A MODULE	
TERMINAL ASSIGNMENT	OUTPUT OR INPUT
~1	Form-A
~2	Form-A
~3	Form-C
~4	Form-C
~5a, ~5c	2 Inputs
~6a, ~6c	2 Inputs
~7a, ~7c	2 Inputs
~8a, ~8c	2 Inputs

~6B MODULE	
TERMINAL ASSIGNMENT	OUTPUT OR INPUT
~1	Form-A
~2	Form-A
~3	Form-C
~4	Form-C
~5	Form-C
~6	Form-C
~7a, ~7c	2 Inputs
~8a, ~8c	2 Inputs

~6C MODULE	
TERMINAL ASSIGNMENT	OUTPUT
~1	Form-C
~2	Form-C
~3	Form-C
~4	Form-C
~5	Form-C
~6	Form-C
~7	Form-C
~8	Form-C

~6D MODULE	
TERMINAL ASSIGNMENT	OUTPUT
~1a, ~1c	2 Inputs
~2a, ~2c	2 Inputs
~3a, ~3c	2 Inputs
~4a, ~4c	2 Inputs
~5a, ~5c	2 Inputs
~6a, ~6c	2 Inputs
~7a, ~7c	2 Inputs
~8a, ~8c	2 Inputs

~6E MODULE	
TERMINAL ASSIGNMENT	OUTPUT OR INPUT
~1	Form-C
~2	Form-C
~3	Form-C
~4	Form-C
~5a, ~5c	2 Inputs
~6a, ~6c	2 Inputs
~7a, ~7c	2 Inputs
~8a, ~8c	2 Inputs

~6F MODULE	
TERMINAL ASSIGNMENT	OUTPUT
~1	Fast Form-C
~2	Fast Form-C
~3	Fast Form-C
~4	Fast Form-C
~5	Fast Form-C
~6	Fast Form-C
~7	Fast Form-C
~8	Fast Form-C

~6G MODULE	
TERMINAL ASSIGNMENT	OUTPUT OR INPUT
~1	Form-A
~2	Form-A
~3	Form-A
~4	Form-A
~5a, ~5c	2 Inputs
~6a, ~6c	2 Inputs
~7a, ~7c	2 Inputs
~8a, ~8c	2 Inputs

~6H MODULE	
TERMINAL ASSIGNMENT	OUTPUT OR INPUT
~1	Form-A
~2	Form-A
~3	Form-A
~4	Form-A
~5	Form-A
~6	Form-A
~7a, ~7c	2 Inputs
~8a, ~8c	2 Inputs

~6K MODULE	
TERMINAL ASSIGNMENT	OUTPUT
~1	Form-C
~2	Form-C
~3	Form-C
~4	Form-C
~5	Fast Form-C
~6	Fast Form-C
~7	Fast Form-C
~8	Fast Form-C

~6L MODULE	
TERMINAL ASSIGNMENT	OUTPUT OR INPUT
~1	Form-A
~2	Form-A
~3	Form-C
~4	Form-C
~5a, ~5c	2 Inputs
~6a, ~6c	2 Inputs
~7a, ~7c	2 Inputs
~8a, ~8c	2 Inputs

~6M MODULE	
TERMINAL ASSIGNMENT	OUTPUT OR INPUT
~1	Form-A
~2	Form-A
~3	Form-C
~4	Form-C
~5	Form-C
~6	Form-C
~7a, ~7c	2 Inputs
~8a, ~8c	2 Inputs

~6N MODULE	
TERMINAL ASSIGNMENT	OUTPUT OR INPUT
~1	Form-A
~2	Form-A
~3	Form-A
~4	Form-A
~5a, ~5c	2 Inputs
~6a, ~6c	2 Inputs
~7a, ~7c	2 Inputs
~8a, ~8c	2 Inputs

~6P MODULE	
TERMINAL ASSIGNMENT	OUTPUT OR INPUT
~1	Form-A
~2	Form-A
~3	Form-A
~4	Form-A
~5	Form-A
~6	Form-A
~7a, ~7c	2 Inputs
~8a, ~8c	2 Inputs

~6R MODULE	
TERMINAL ASSIGNMENT	OUTPUT OR INPUT
~1	Form-A
~2	Form-A
~3	Form-C
~4	Form-C
~5a, ~5c	2 Inputs
~6a, ~6c	2 Inputs
~7a, ~7c	2 Inputs
~8a, ~8c	2 Inputs

~6S MODULE	
TERMINAL ASSIGNMENT	OUTPUT OR INPUT
~1	Form-A
~2	Form-A
~3	Form-C
~4	Form-C
~5	Form-C
~6	Form-C
~7a, ~7c	2 Inputs
~8a, ~8c	2 Inputs

~6T MODULE	
TERMINAL ASSIGNMENT	OUTPUT OR INPUT
~1	Form-A
~2	Form-A
~3	Form-A
~4	Form-A
~5a, ~5c	2 Inputs
~6a, ~6c	2 Inputs
~7a, ~7c	2 Inputs
~8a, ~8c	2 Inputs

~6U MODULE	
TERMINAL ASSIGNMENT	OUTPUT OR INPUT
~1	Form-A
~2	Form-A
~3	Form-A
~4	Form-A
~5	Form-A
~6	Form-A
~7a, ~7c	2 Inputs
~8a, ~8c	2 Inputs

~6V MODULE	
TERMINAL ASSIGNMENT	OUTPUT OR INPUT
~1	Form-A
~2	Form-A
~3	Form-C
~4	2 Outputs
~5a, ~5c	2 Inputs
~6a, ~6c	2 Inputs
~7a, ~7c	2 Inputs
~8a, ~8c	2 Inputs

~67 MODULE	
TERMINAL ASSIGNMENT	OUTPUT
~1	Form-A
~2	Form-A
~3	Form-A
~4	Form-A
~5	Form-A
~6	Form-A
~7	Form-A
~8	Form-A

~4A MODULE	
TERMINAL ASSIGNMENT	OUTPUT
~1	Not Used
~2	Solid-State
~3	Not Used
~4	Solid-State
~5	Not Used
~6	Solid-State
~7	Not Used
~8	Solid-State

~4B MODULE	
TERMINAL ASSIGNMENT	OUTPUT
~1	Not Used
~2	Solid-State
~3	Not Used
~4	Solid-State
~5	Not Used
~6	Solid-State
~7	Not Used
~8	Solid-State

~4C MODULE	
TERMINAL ASSIGNMENT	OUTPUT
~1	Not Used
~2	Solid-State
~3	Not Used
~4	Solid-State
~5	Not Used
~6	Solid-State
~7	Not Used
~8	Solid-State

~4D MODULE	
TERMINAL ASSIGNMENT	OUTPUT
~1a, ~1c	2 Inputs
~2a, ~2c	2 Inputs
~3a, ~3c	2 Inputs
~4a, ~4c	2 Inputs
~5a, ~5c	2 Inputs
~6a, ~6c	2 Inputs
~7a, ~7c	2 Inputs
~8a, ~8c	2 Inputs

~4L MODULE	
TERMINAL ASSIGNMENT	OUTPUT
~1	2 Outputs
~2	2 Outputs
~3	2 Outputs
~4	2 Outputs
~5	2 Outputs
~6	2 Outputs
~7	2 Outputs
~8	Not Used

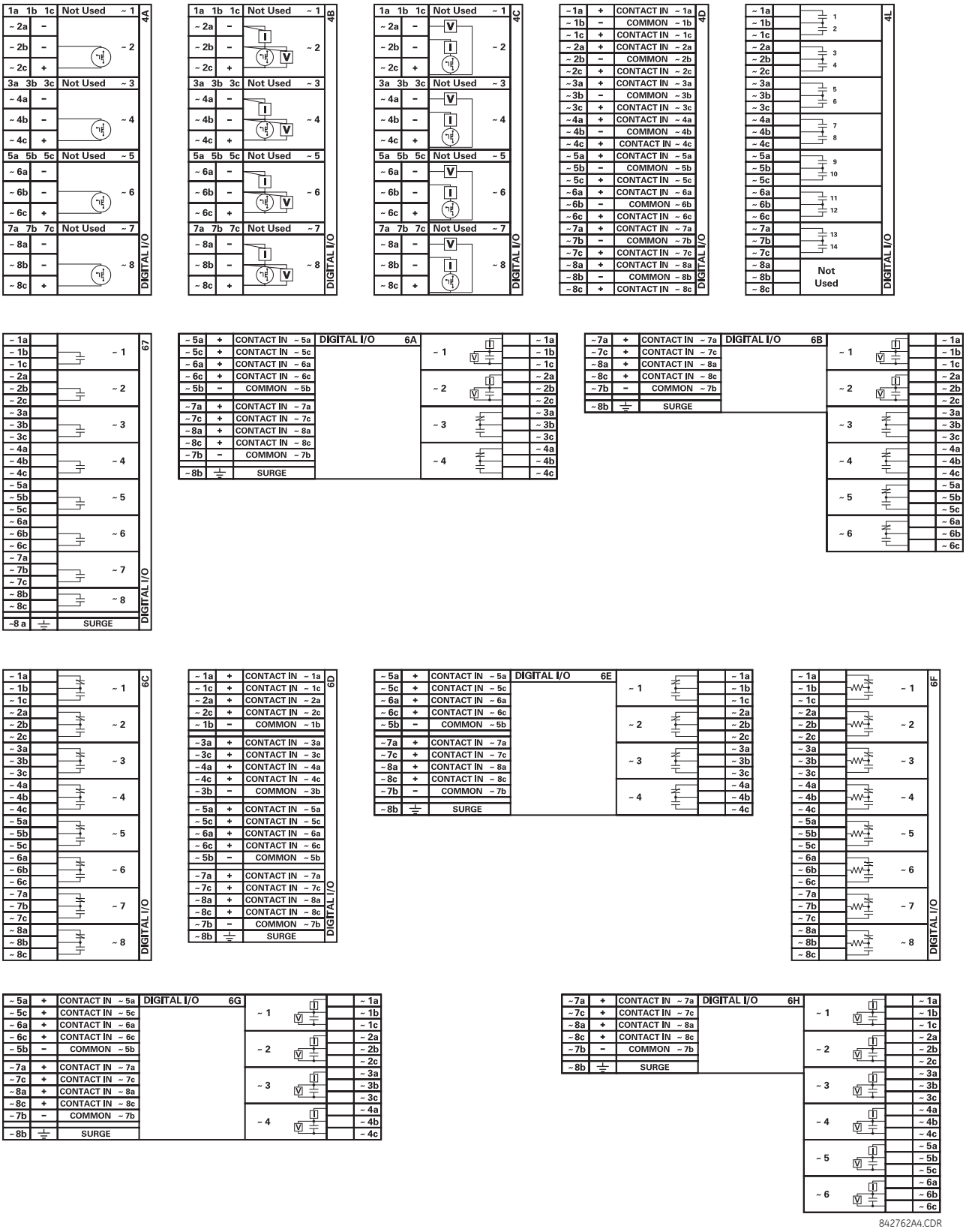

Figure 3–16: CONTACT INPUT AND OUTPUT MODULE WIRING (1 of 2)

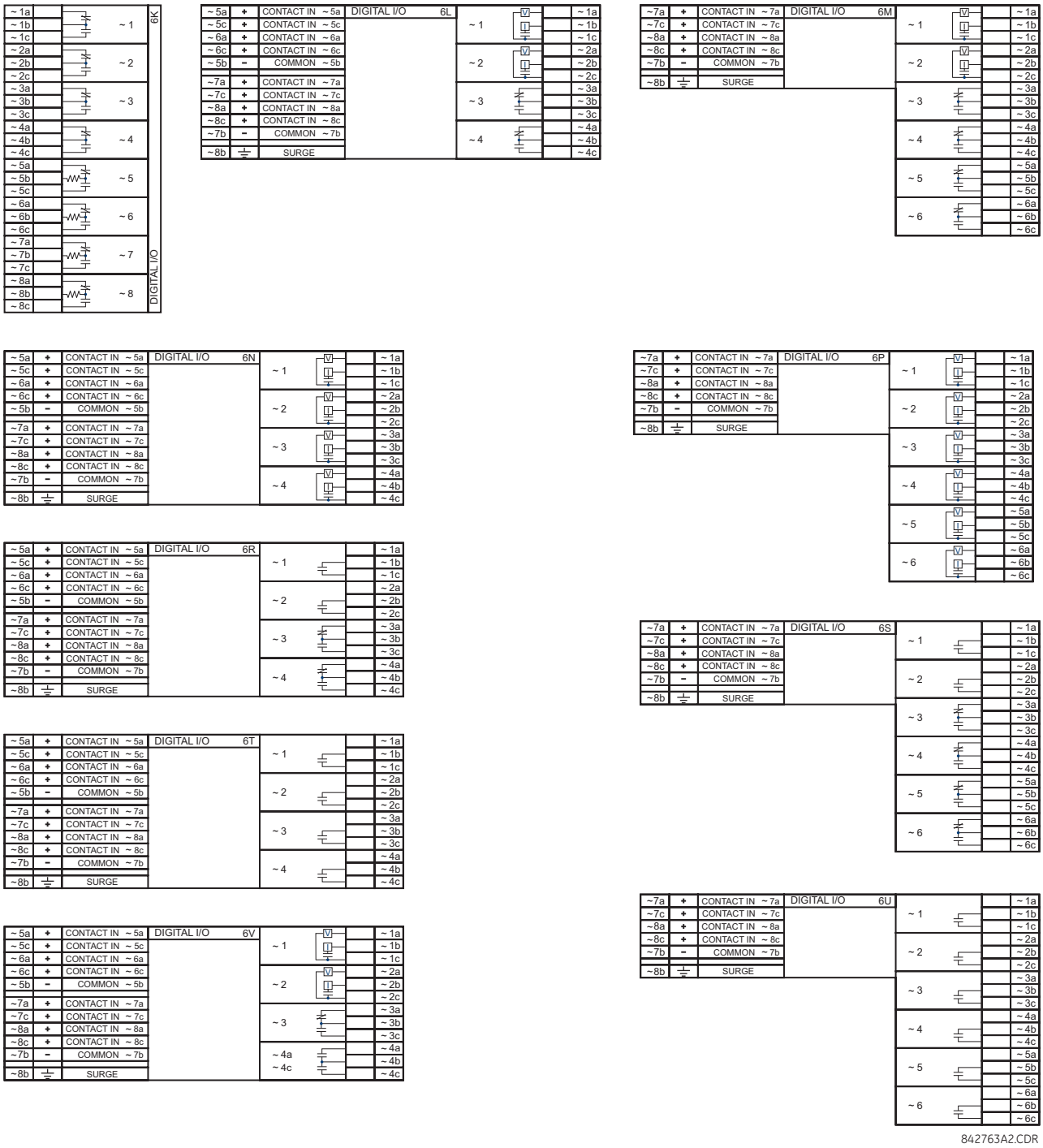

Figure 3–17: CONTACT INPUT AND OUTPUT MODULE WIRING (2 of 2)

NOTICE For proper functionality, observe the polarity shown in the figures for all contact input and output connections.

CONTACT INPUTS

A dry contact has one side connected to terminal B3b. This is the positive 48 V DC voltage rail supplied by the power supply module. The other side of the dry contact is connected to the required contact input terminal. Each contact input group has its own common (negative) terminal which must be connected to the DC negative terminal (B3a) of the power supply module. When a dry contact closes, a current of 1 to 3 mA flows through the associated circuit.

A wet contact has one side connected to the positive terminal of an external DC power supply. The other side of this contact is connected to the required contact input terminal. If a wet contact is used, then the negative side of the external source must be connected to the relay common (negative) terminal of each contact group. The maximum external source voltage for this arrangement is 300 V DC.

The voltage threshold at which each group of four contact inputs detects a closed contact input is programmable as 17 V DC for 24 V sources, 33 V DC for 48 V sources, 84 V DC for 110 to 125 V sources, and 166 V DC for 250 V sources.

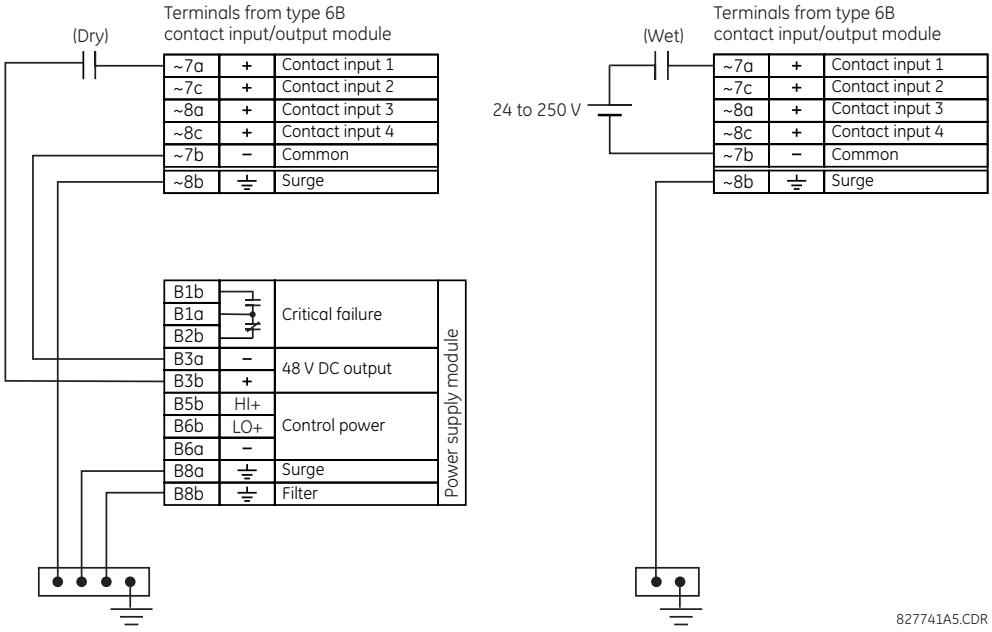

Figure 3–18: DRY AND WET CONTACT INPUT CONNECTIONS

NOTE

Wherever a tilde "~" symbol appears, substitute with the slot position of the module.

There is no provision in the relay to detect a DC ground fault on 48 V DC control power external output. We recommend using an external DC supply.

GENERAL APPLICATION CONSIDERATIONS

Contacts outputs of protective relays, auxiliary contacts from breakers, disconnectors and other devices, are generally connected to contacts inputs of protective relays. In some situations, the contact outputs of some protective relays can have high impedance connected across it. When such a contact output is connected across a C70 contact input, it can spuriously operate the C70 input even when the output is open, if there is a substantial distributed capacitance (represented by C1) present in the wiring between the output and the C70 input and the debounce time setting in the C70 relay is low enough. This false assertion of the contact input, when there is inadvertent ground present at the DC positive terminal, can be prevented by inserting a resistor across the C70 input.

The following figure shows a typical DC circuit, with battery ground detection, of contact input. The contact output has parallel impedance across it (represented by R1).

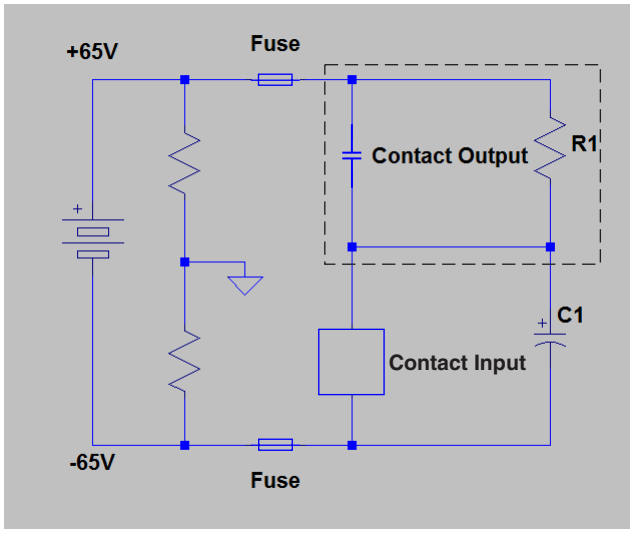

Figure 3–19: TYPICAL CONTACT INPUT DC CIRCUIT

The presence of the impedance path (R1) across the contact output allows the stray (distributed) capacitance C1 to charge as shown, thus developing a voltage across the contact input enough to momentarily operate the input while the capacitance discharges in the presence of DC ground on the positive terminal of the battery.

The duration of the discharge depends on the value of the distributed capacitance, the initial voltage of the distributed capacitance, and the input impedance of the contact input. If the duration is greater than the debounce time setting, then the contact input operates.

The application example that follows describes how to mitigate this problem by connecting a resistor across the contact input, as shown in the next figure, or by adjusting the debounce time setting to a value greater than the discharge time to prevent spurious operation of the contact input only if the voltage (with output open) across the contact input due to trickle current is less than the threshold voltage. This operation of contact inputs also can be prevented by using the Auto-Burnish contact inputs or contact inputs with active impedance.

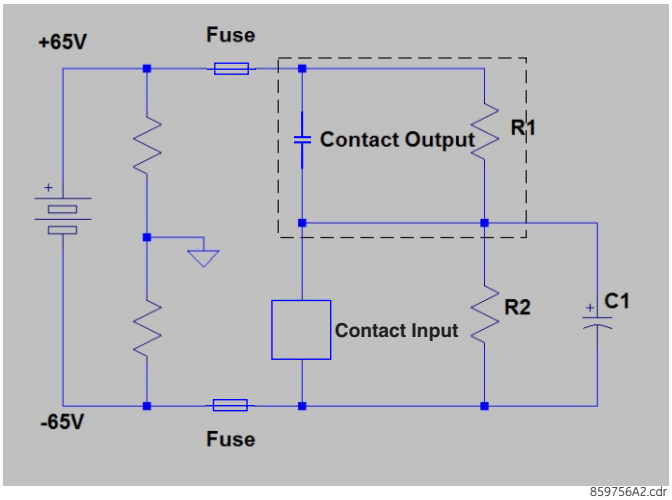

Figure 3–20: CONTACT INPUT CONNECTED TO A CONTACT OUTPUT WITH RESISTOR (R2) ACROSS THE INPUT

APPLICATION EXAMPLE

This example is for illustrative purposes only and the calculations present the worst-case scenario. In practice, the value of debounce time can be lower.

Contact input ON state impedance used in the calculation of the discharge period is based on the following table.

Table 3–3: DISCHARGE PERIOD

BATTERY VOLTAGE (V)	INPUT IMPEDANCE (KΩ)
130	50
250	97

Debounce time setting = 2 ms

Assume a stray capacitance of 0.1 µF.

Assume an initial voltage across the stray capacitance "Vinitial" = 19 V (Vthreshold - 65 V), where Vthreshold = 84 V. The initial voltage Vinitial depends on values of impedance of R1 and contact inputs when the contact input is OFF (non-activated state).

Therefore, discharge time constant (τ) =50 kΩ *0.1 µF = 5 ms.

Discharge period t is calculated from the following equation:

$$Vthreshold = (Vbatt - VInitial) *e^{(-t/\tau)}$$

$$84 = -149 *e^{(t/0.005)} \quad \textbf{(EQ 3.1)}$$

$$T = -0.005 * \ln (84/149) = 0.0029 \text{ s}$$

Therefore, in this example the contact inputs operate.

To prevent this operation, the debounce time must be increased to 4 ms (set debounce time as per the following table) or insert a resistor less than or equal to "R" as calculated later.

Table 3–4: TYPICAL DEBOUNCE TIME SETTING

STRAY CAPACITANCE (µF)	BATTERY VOLTAGE (V)	DEBOUNCE TIME (MS)
0.05	130	2
0.1	130	4
0.2	130	6
0.05	250	3
0.1	250	6
0.2	250	11

The value of this resistor "R" is calculated as follows:

1. Determine the minimum voltage (V threshold) required to turn on the input. This is determined by direct measurement or referenced in the input specifications.
2. Calculate the resistance necessary to limit the voltage to 1/3 V threshold (when the contact is OFF, the non-activated state) as follows:

   $$R = (Vthreshold / 3) / (2 \text{ mA}) \quad \textbf{(EQ 3.2)}$$

   The 2 mA current is used in case the contact input is connected across the GE Form A contact output with voltage monitoring. Otherwise use the amperage of the active circuit connected to the contact input when its contact output is open and the voltage across the contact input is third trigger threshold to calculate the resistor value.
3. When the contact is ON (operate state), the battery voltage appears across the resistor. The wattage rating of the resistor is then:

   $$PR = 1.3 * (Vbatt) ^2 / R \text{ Watts} \quad \textbf{(EQ 3.3)}$$
4. Applying the following equation to our example:

   $$R = 84 \text{ V} / 3*(1 / 2 \text{ mA}) = 14 \text{ k}\Omega$$

   $$PR = 1.57 \text{ Watts} \quad \textbf{(EQ 3.4)}$$
5. Calculating the voltage across the contact input with the Burden Resistor, Voltage across the contact Input:

$$V_{resistor} = 2\ mA * 14\ Kohm = 28\ V$$

$$V_{resistor} < \text{contact input threshold (84 V)} \quad \textbf{(EQ 3.5)}$$

In conclusion, in this example, the contact input does NOT operate falsely with the Burden Resistor across its input AND when a battery ground is present.

USE OF CONTACT INPUTS WITH AUTO-BURNISHING

The contact inputs sense a change of the state of the external device contact based on the measured current. When external devices are located in a harsh industrial environment (either outdoor or indoor), their contacts can be exposed to various types of contamination. Normally, there is a thin film of insulating sulfidation, oxidation, or contaminates on the surface of the contacts, sometimes making it difficult or impossible to detect a change of the state. This film must be removed to establish circuit continuity – an impulse of higher than normal current can accomplish this.

The contact inputs with auto-burnish create a high current impulse when the threshold is reached to burn off this oxidation layer as a maintenance to the contacts. Afterwards the contact input current is reduced to a steady-state current. The impulse has a 5 second delay after a contact input changes state.

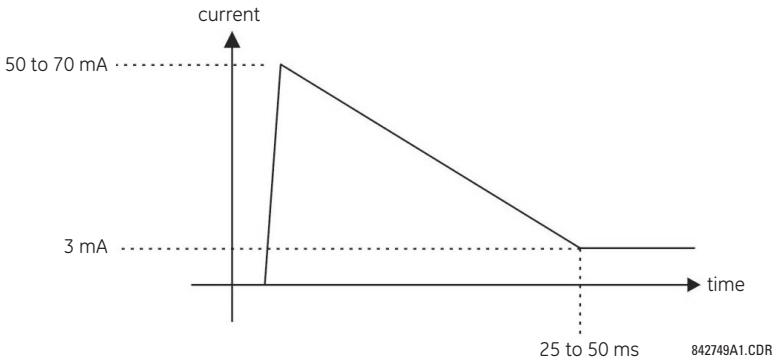

Figure 3–21: CURRENT THROUGH CONTACT INPUTS WITH AUTO-BURNISHING

Regular contact inputs limit current to less than 3 mA to reduce station battery burden. In contrast, contact inputs with auto-burnishing allow currents up to 50 to 70 mA at the first instance when the change of state was sensed. Then, within 25 to 50 ms, this current is slowly reduced to 3 mA as indicated above. The 50 to 70 mA peak current burns any film on the contacts, allowing for proper sensing of state changes. If the external device contact is bouncing, the auto-burnishing starts when external device contact bouncing is over.

Another important difference between the auto-burnishing input module and the regular input modules is that only two contact inputs have common ground, as opposed to four contact inputs sharing one common ground (refer to the Contact Input and Output Module Wiring diagrams). This is beneficial when connecting contact inputs to separate voltage sources. Consequently, the threshold voltage setting is also defined per group of two contact inputs.

The auto-burnish feature can be disabled or enabled using the DIP switches found on each daughter card. There is a DIP switch for each contact, for a total of 16 inputs.

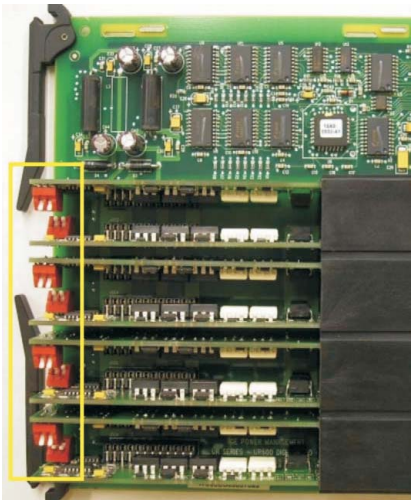

CONTACT INPUT 1 AUTO-BURNISH = OFF
CONTACT INPUT 2 AUTO-BURNISH = OFF

CONTACT INPUT 1 AUTO-BURNISH = ON
CONTACT INPUT 2 AUTO-BURNISH = OFF

CONTACT INPUT 1 AUTO-BURNISH = OFF
CONTACT INPUT 2 AUTO-BURNISH = ON

CONTACT INPUT 1 AUTO-BURNISH = ON
CONTACT INPUT 2 AUTO-BURNISH = ON

842751A1.CDR

Figure 3–22: AUTO-BURNISH DIP SWITCHES

NOTE

The auto-burnish circuitry has an internal fuse for safety purposes. During regular maintenance, check the auto-burnish functionality using an oscilloscope.

USE OF CONTACT INPUTS WITH ACTIVE IMPEDANCE

Contact inputs susceptible to parasitic capacitance caused by long cable runs affected by switching surges from external circuits can result in inadvertent activation of contact inputs with the external contact open. In this case, GE recommends using the digital I/O module with active impedance circuit.

Active impedance contact input can tolerate external cable capacitance of up to 0.2 µF, without entering the ON state for more than 2 ms. The contact input debounce time can still be set above 2 ms for added security to prevent contact input activations cause by external transient ON states.

An active impedance contact input is normally in Low impedance mode during OFF contact state (non-activated condition). During Low impedance state contact input impedance is maintained at 10 K Ohms impedance to allow fast discharge of the stray capacitance of the long cables.

When the contact input voltage exceeds the set threshold, active impedance maintains 10 K Ohms impedance value. If voltage starts rapidly decreasing, this indicates that stray capacitance is being discharged through the contact input. If, however, voltage stabilizes above the set threshold, the input impedance is switched to High impedance mode of 100 K Ohms. This value reduces the input current to <3 mA, and contact input switched to the ON state (operated state).

The figure shows the active impedance contact input V-I characteristic. Different thresholds with their corresponding characteristics are shown by color. The contact input is in the ON (operated) state if the input voltage is to the right of the colored threshold band (+/-10% tolerance), and the contact input is in the OFF (non-activated) state when input voltage is to the left of the band. A contact input is in LOW state during non-operated system condition, and actively switches to HIGH state upon detection of input voltage above the settable threshold.

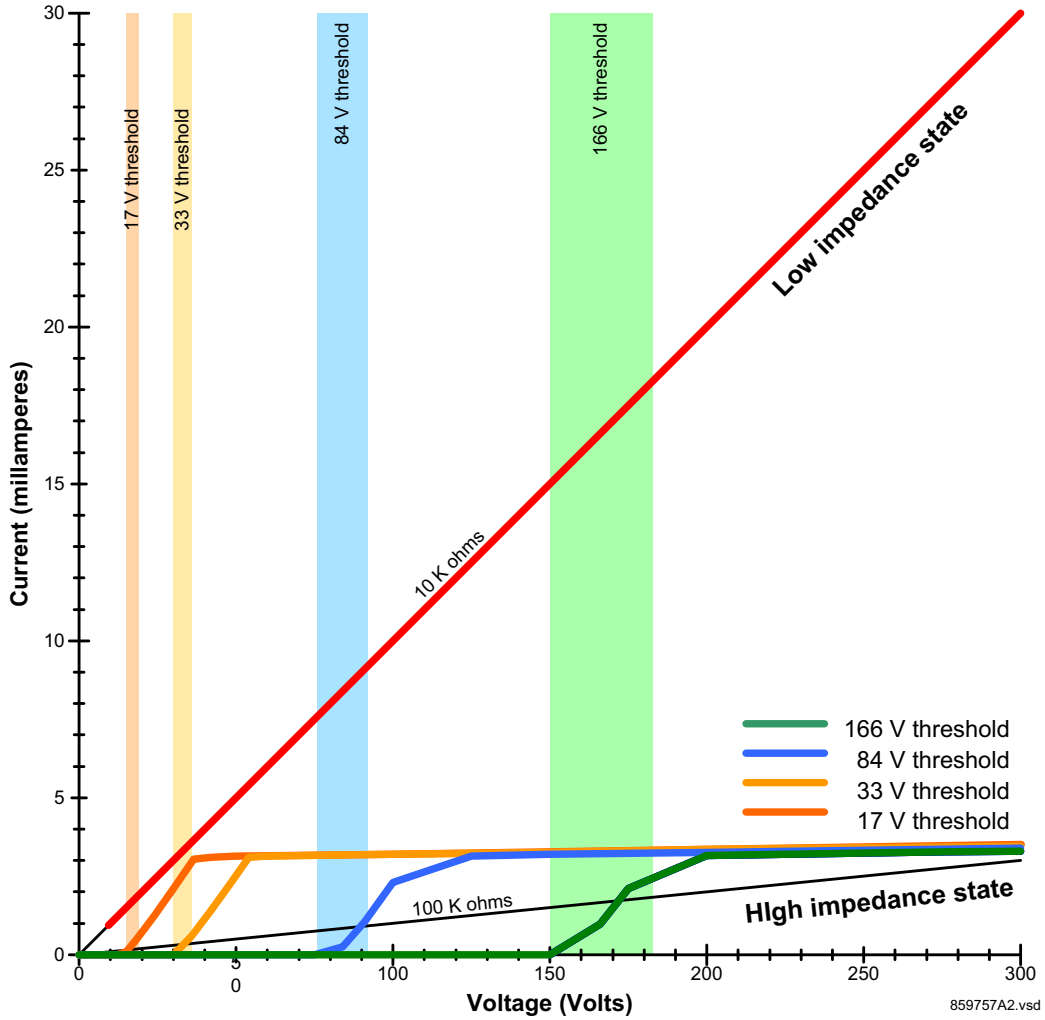

Figure 3–23: ACTIVE IMPEDANCE CONTACT INPUT V-I CHARACTERISTIC

3.2.7 TRANSDUCER INPUTS/OUTPUTS

Transducer input modules can receive input signals from external DCmA output transducers (DCmA In) or resistance temperature detectors (RTDs). Hardware and software are provided to receive signals from these external transducers and convert these signals into a digital format for use as required.

Transducer output modules provide DC current outputs in several standard DCmA ranges. Software is provided to configure virtually any analog quantity used in the relay to drive the analog outputs.

Every transducer input/output module has a total of 24 terminal connections. These connections are arranged as three terminals per row with a total of eight rows. A given row can be used for either inputs or outputs, with terminals in column "a" having positive polarity and terminals in column "c" having negative polarity. Since an entire row is used for a single input/output channel, the name of the channel is assigned using the module slot position and row number.

Each module also requires that a connection from an external ground bus be made to terminal 8b. The current outputs require a twisted-pair shielded cable, where the shield is grounded at one end only. The following figure illustrates the transducer module types (5A, 5C, 5D, 5E, and 5F) and channel arrangements that can be ordered for the relay.

NOTE

Wherever a tilde “~” symbol appears, substitute with the slot position of the module.

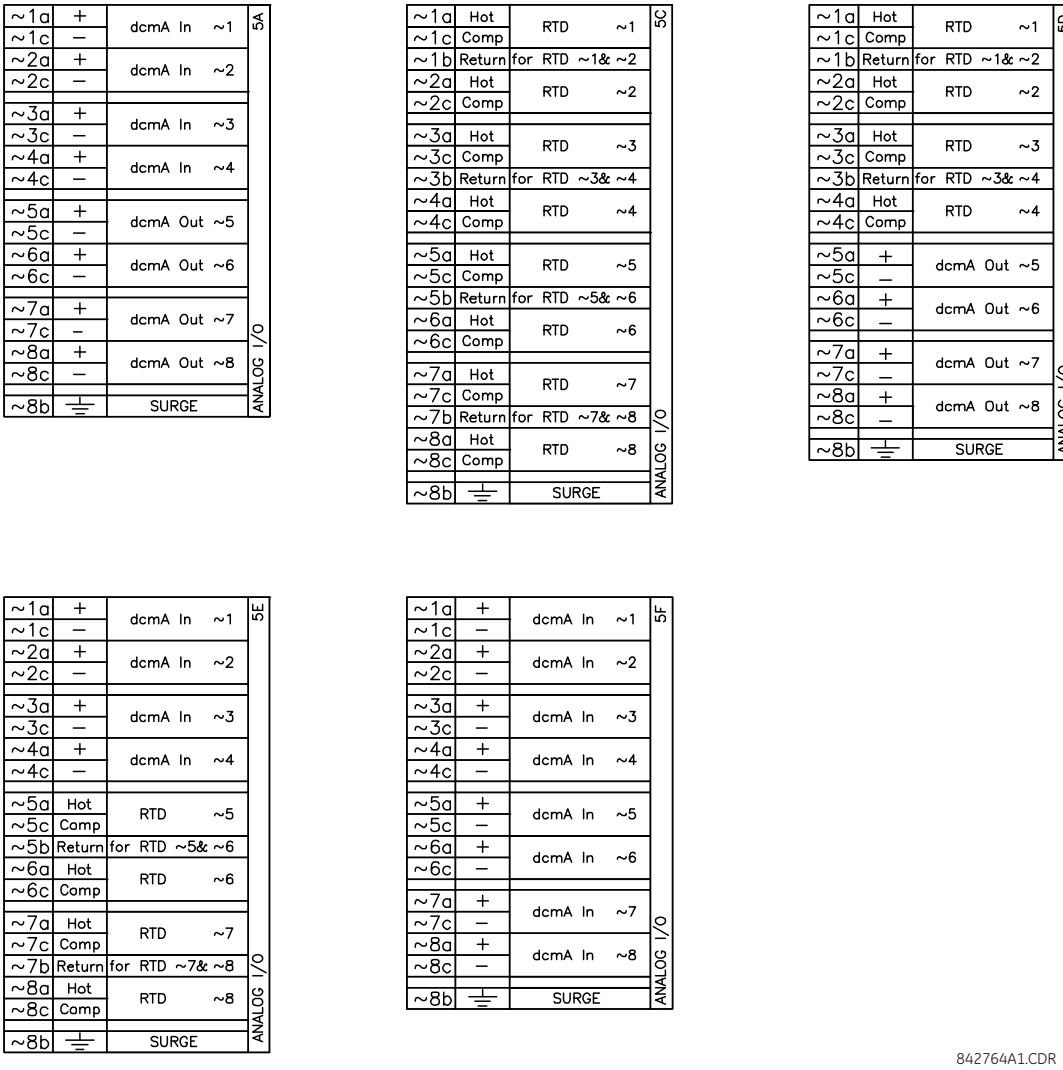

Figure 3–24: TRANSDUCER INPUT/OUTPUT MODULE WIRING

The following figure show how to connect RTDs.

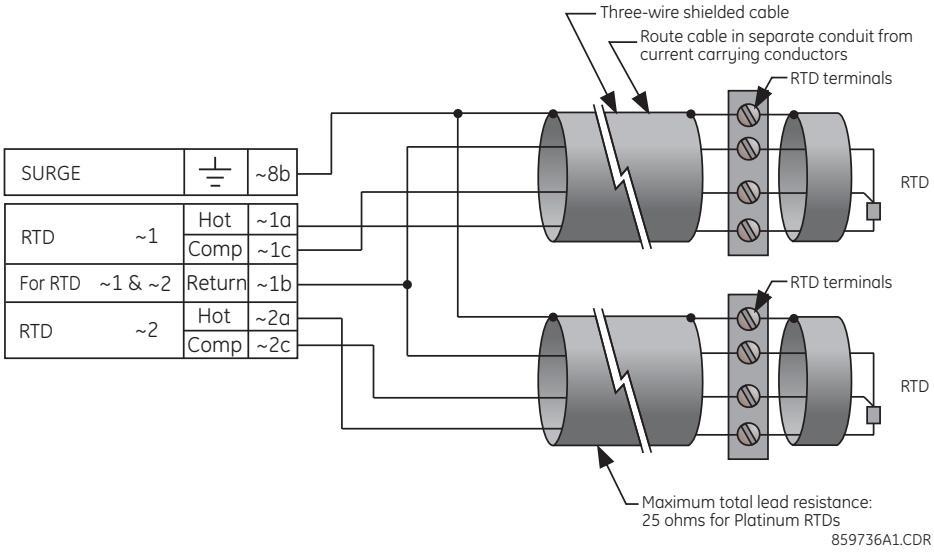

Figure 3–25: RTD CONNECTION

3.2.8 RS232 FACEPLATE PORT

A 9-pin RS232C serial port is located on the C70 faceplate for programming with a computer. All that is required to use this interface is a computer running the EnerVista UR Setup software provided with the relay. Cabling for the RS232 port is shown in the following figure for both 9-pin and 25-pin connectors.

NOTE

The baud rate for this port is fixed at 19200 bps.

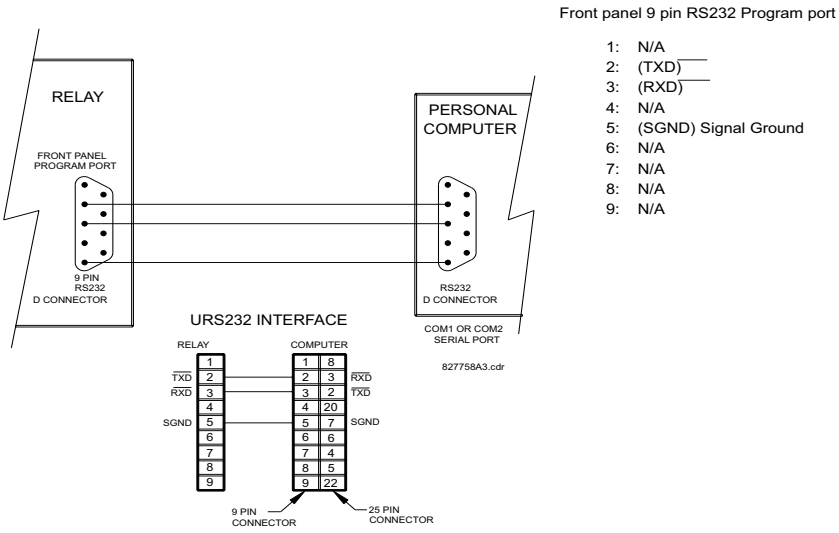

Figure 3–26: RS232 FACEPLATE PORT CONNECTION

3.2.9 CPU COMMUNICATION PORTS

a) OVERVIEW

In addition to the faceplate RS232 port, the C70 provides a rear RS485 communication port.

The CPU modules do not require a surge ground connection.

If using a Process Bus Module and IRIG-B as the synchronizing source, GE recommends moving the grounding from the IRIG-B generator to UR terminal D4a in order to better protect the IRIG-B input from long bursts of transient noise.

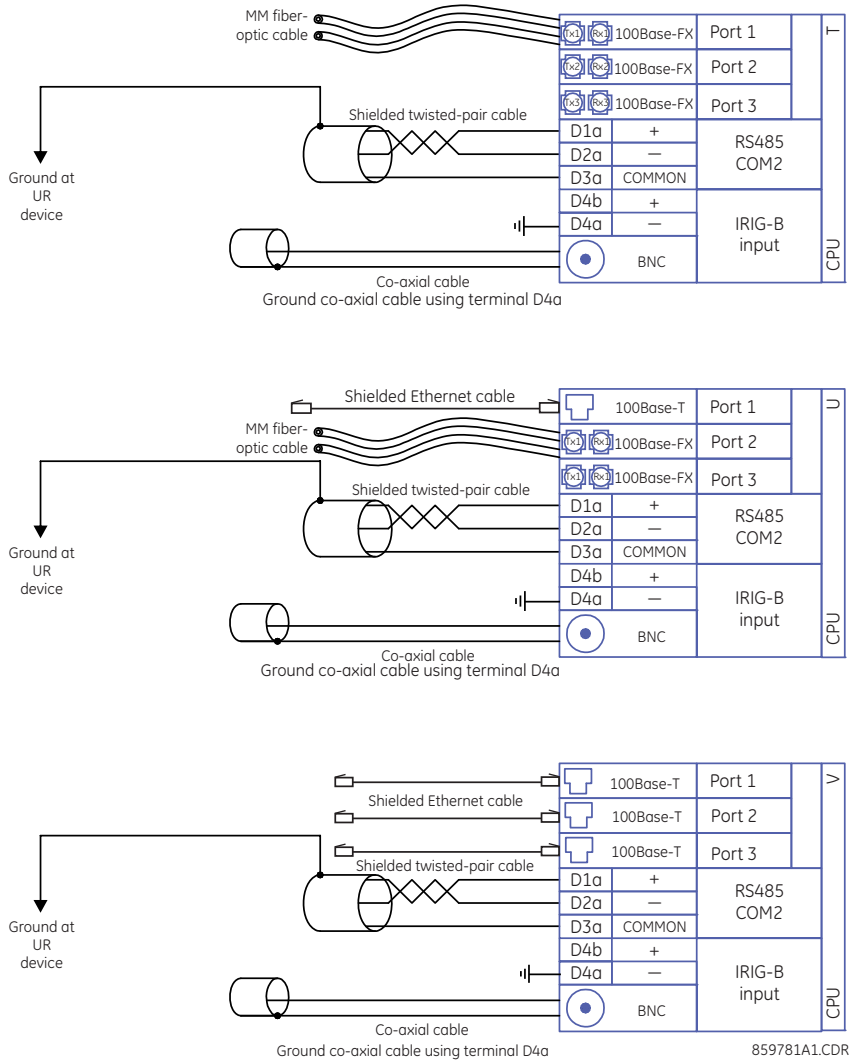

Figure 3–27: CPU MODULE WIRING WHEN USING PROCESS BUS MODULE

If not using a Process Bus Module, the following IRIG-B cable and ground connection is appropriate.

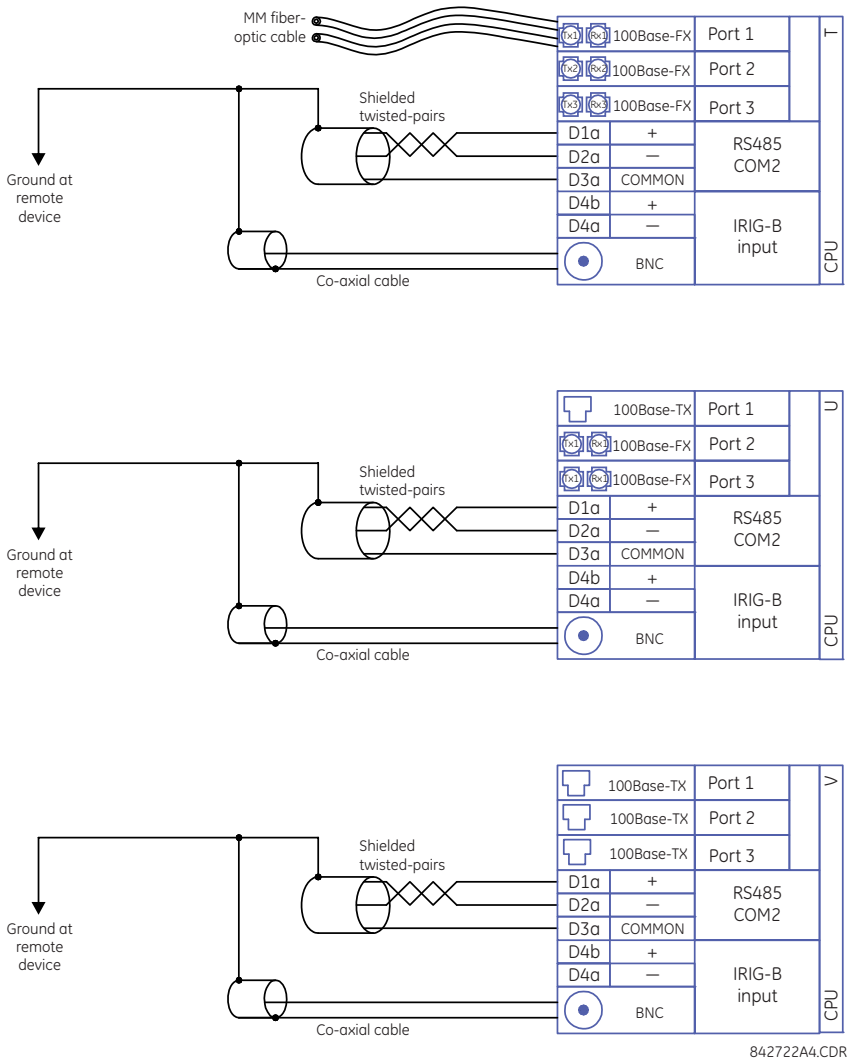

Figure 3–28: CPU MODULE WIRING FOR IRIG-B WITHOUT PROCESS BUS MODULE

b) RS485 PORTS

RS485 data transmission and reception are accomplished over a single twisted pair with transmit and receive data alternating over the same two wires. Through the use of the port, continuous monitoring and control from a remote computer, SCADA system, or PLC is possible.

To minimize errors from noise, the use of shielded twisted pair wire is recommended. Correct polarity must also be observed. For instance, the relays must be connected with all RS485 “+” terminals connected together, and all RS485 “–” terminals connected together. Though data is transmitted over a two-wire twisted pair, all RS485 devices require a shared reference, or common voltage. This common voltage is implied to be a power supply common. Some systems allow the shield (drain wire) to be used as common wire and to connect directly to the C70 COM terminal (#3); others function correctly only if the common wire is connected to the C70 COM terminal, but insulated from the shield.

To avoid loop currents, ground the shield at only one point. If other system considerations require the shield to be grounded at more than one point, install resistors (typically 100 ohms) between the shield and ground at each grounding point. Each relay needs to be daisy-chained to the next one in the link. A maximum of 32 relays can be connected in this manner without exceeding driver capability. For larger systems, additional serial channels must be added. It is also possible to use commercially available repeaters to have more than 32 relays on a single channel. Avoid star or stub connections entirely.

Lightning strikes and ground surge currents can cause large momentary voltage differences between remote ends of the communication link. For this reason, surge protection devices are internally provided at both communication ports. An isolated power supply with an optocoupled data interface also acts to reduce noise coupling. To ensure maximum reliability, all equipment should have similar transient protection devices installed.

Terminate both ends of the RS485 circuit with an impedance as shown below.

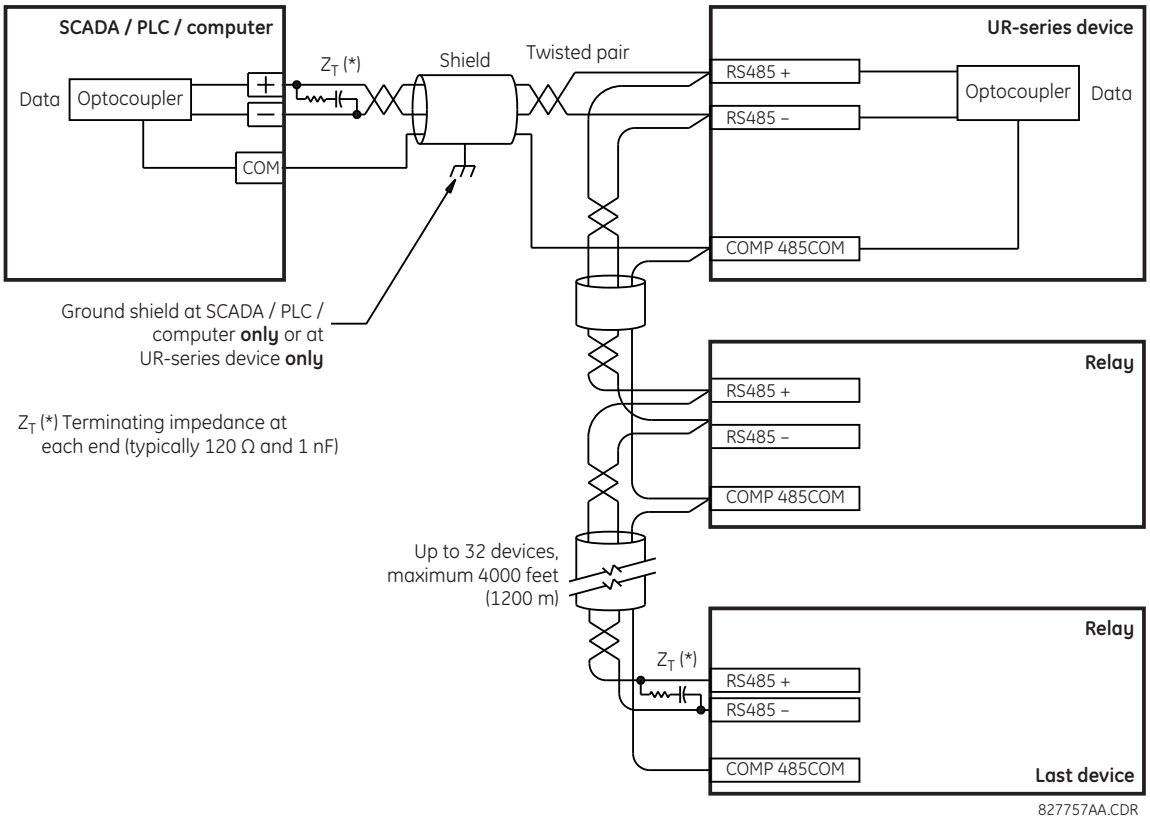

Figure 3–29: RS485 SERIAL CONNECTION

c) 100BASE-FX FIBER OPTIC PORTS

Ensure that the dust covers are installed when the fiber is not in use. Dirty or scratched connectors can lead to high losses on a fiber link.

The fiber optic communication ports allow for fast and efficient communications between relays at 100 Mbps. Optical fiber can be connected to the relay supporting a wavelength of 1310 nm in multi-mode.

3.2.10 IRIG-B

IRIG-B is a standard time code format that allows stamping of events to be synchronized among connected devices. The IRIG-B code allows time accuracies of up to 100 ns. Using the IRIG-B input, the C70 operates an internal oscillator with 1 µs resolution and accuracy. The IRIG time code formats are serial, pulse width-modulated codes that can be either DC level shifted or amplitude modulated (AM). The GE MultiSync 100 1588 GPS Clock as well as third-party equipment are available for generating the IRIG-B signal; this equipment can use a global positioning system (GPS) satellite system to obtain the time reference so that devices at different geographic locations can be synchronized.

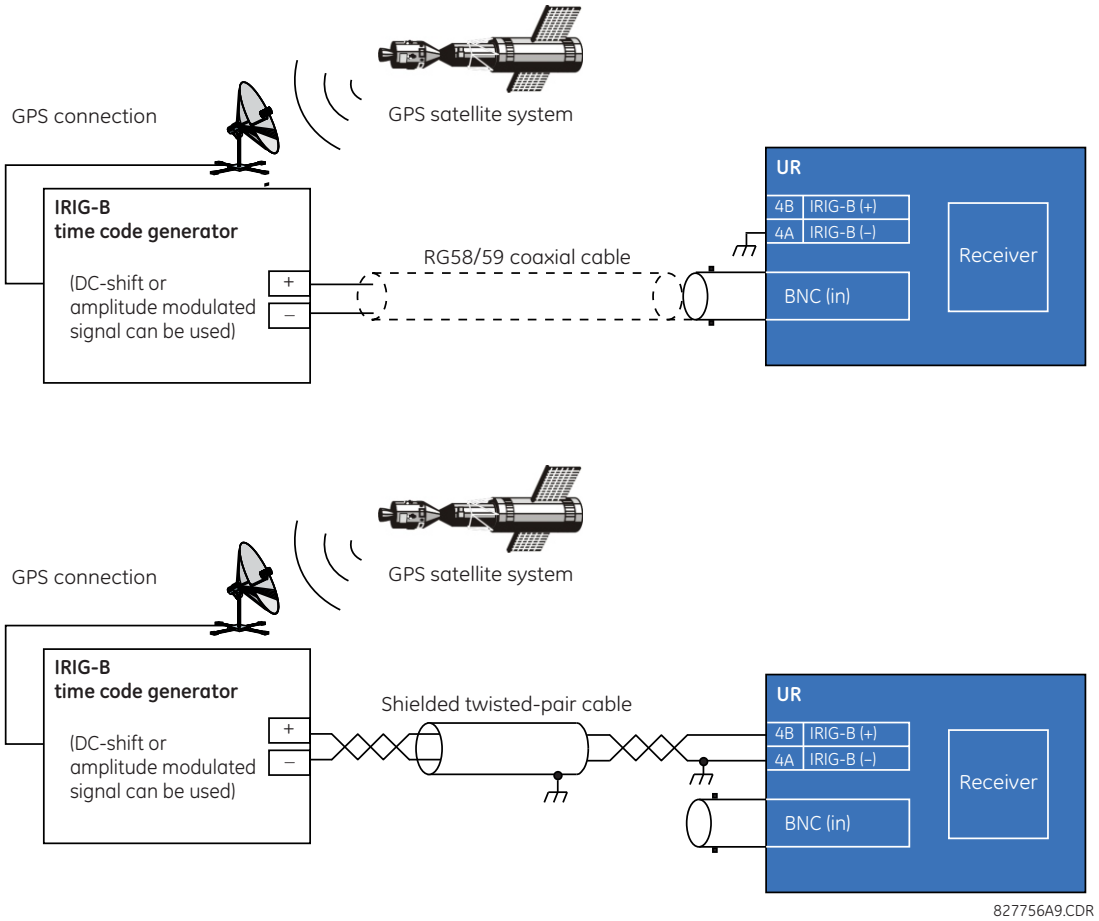

Figure 3–30: OPTIONS FOR THE IRIG-B CONNECTION

NOTE

Using an amplitude modulated receiver causes errors up to 1 ms in event time-stamping.

The C70 is intended for use with external clocks that set the IRIG-B control bits according to IEEE Std C37.118.1-2011. When used with a source that sets the IRIG-B control bits according to IEEE Std 1344-1995, the source must have the sign of its local time offset setting reversed, and if daylight savings time (DST) is used, the source's DST start and DST stop date settings must be interchanged.

3.3.1 DESCRIPTION

The direct inputs and outputs feature makes use of the type 7 series of communications modules, which allow direct messaging between UR devices. These communications modules are outlined in the table later in this section.

The communications channels are normally connected in a ring configuration as shown in the following figure. The transmitter of one module is connected to the receiver of the next module. The transmitter of this second module is then connected to the receiver of the next module in the ring. This is continued to form a communications ring. The figure illustrates a ring of four UR-series relays with the following connections: UR1-Tx to UR2-Rx, UR2-Tx to UR3-Rx, UR3-Tx to UR4-Rx, and UR4-Tx to UR1-Rx. A maximum of 16 URs can be connected in a single ring.

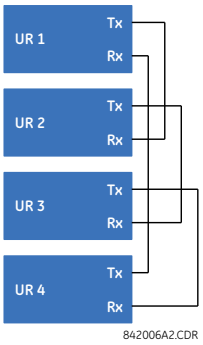

Figure 3–31: DIRECT INPUT AND OUTPUT SINGLE CHANNEL CONNECTION

IRC modules with protocol C37.94 and G.703 are designed for back-to-back communication connections, so the ring configuration shown in the previous figure does not apply. To establish inter-relay communication in more than two URs, you need to have two channel IRC module and enable DIRECT I/O CHANNEL CROSSOVER function in all relays, as shown in the next figure. This configuration can be expanded to 16 URs, and this configuration does not provide redundancy ring since both channels are made into single ring by the channel crossover function. As per the figure Typical Pin Interconnection between Two G.703 Interfaces later in this chapter, the clock is supplied typically by multiplexer (MUX) and all URs are in Loop Timing Mode. If there is no MUX, then UR1 and UR3 can be in Internal Timing Mode and UR2 and UR4 can be in Loop Timing Mode. That is, connected channels must have opposite timing modes.

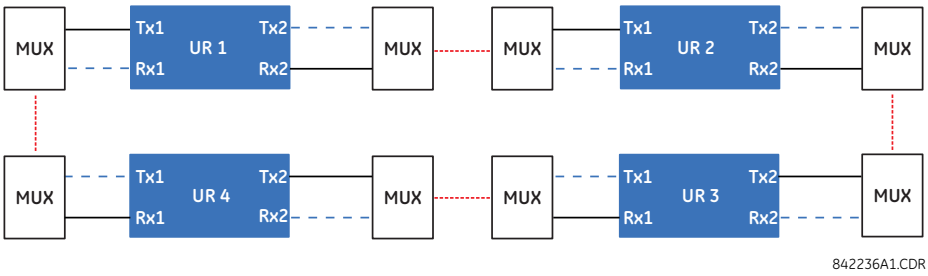

Figure 3–32: RING CONFIGURATION FOR C37.94 MODULE (CONCEPT ALSO APPLIES TO G.703)

The interconnection for dual-channel type 7 communications modules is shown as follows. Two channel modules allow for a redundant ring configuration. That is, two rings can be created to provide an additional independent data path. The required connections are: UR1-Tx1 to UR2-Rx1, UR2-Tx1 to UR3-Rx1, UR3-Tx1 to UR4-Rx1, and UR4-Tx1 to UR1-Rx1 for the first ring; and UR1-Tx2 to UR4-Rx2, UR4-Tx2 to UR3-Rx2, UR3-Tx2 to UR2-Rx2, and UR2-Tx2 to UR1-Rx2 for the second ring.

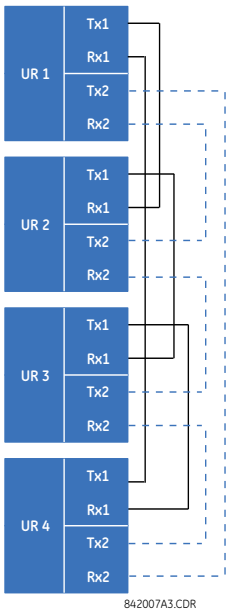

Figure 3–33: DIRECT INPUT AND OUTPUT DUAL CHANNEL CONNECTION

The following diagram shows the connection for three UR-series relays using two independent communication channels. UR1 and UR3 have single type 7 communication modules; UR2 has a dual-channel module. The two communication channels can be of different types, depending on the Type 7 modules used. To allow the direct input and output data to *cross-over* from channel 1 to channel 2 on UR2, the **DIRECT I/O CHANNEL CROSSOVER** setting should be "Enabled" on UR2. This forces UR2 to forward messages received on Rx1 out Tx2, and messages received on Rx2 out Tx1.

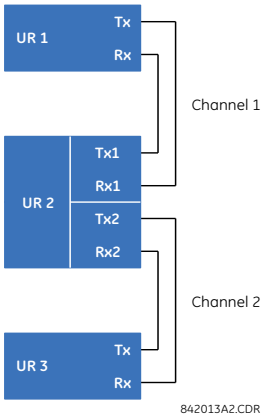

Figure 3–34: DIRECT INPUT AND OUTPUT SINGLE/DUAL CHANNEL COMBINATION CONNECTION

The inter-relay communications modules are available with several interfaces and some are outlined here in more detail. Those that apply depend on options purchased. The options are outlined in the Inter-Relay Communications section of the Order Code tables in Chapter 2. All of the fiber modules use ST type connectors.

3.3.2 FIBER: LED AND ELED TRANSMITTERS

The following figure shows the configuration for the 7A, 7B, 7C, 7H, 7I, and 7J fiber-only modules.

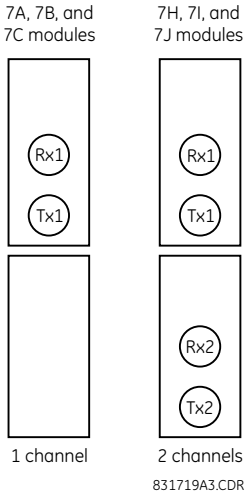

Figure 3–35: LED AND ELED FIBER MODULES

a) DESCRIPTION

The following figure shows the 64K ITU G.703 co-directional interface configuration.

NOTE

The G.703 module is fixed at 64 kbps. The SETTINGS ⇨ PRODUCT SETUP ⇨⇩ DIRECT I/O ⇨⇩ DIRECT I/O DATA RATE setting is not applicable to this module.

AWG 24 twisted shielded pair is recommended for external connections, with the shield grounded only at one end. Connecting the shield to pin X1a or X6a grounds the shield since these pins are internally connected to ground. Thus, if pin X1a or X6a is used to ground the shield at one end, do not ground the shield at the other end. This interface module is protected by surge suppression devices.

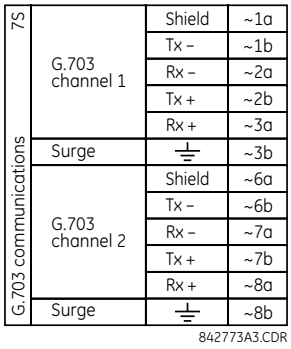

Figure 3–36: G.703 INTERFACE CONFIGURATION

The following figure shows the typical pin interconnection between two G.703 interfaces. For the actual physical arrangement of these pins, see the Rear Terminal Layout section earlier in this chapter. All pin interconnections are to be maintained for a connection to a multiplexer.

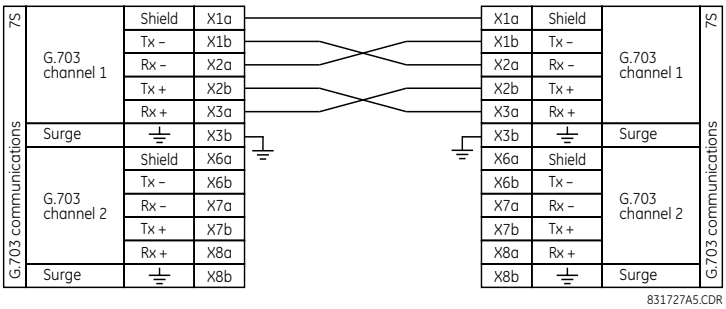

Figure 3–37: TYPICAL PIN INTERCONNECTION BETWEEN TWO G.703 INTERFACES

NOTE

Pin nomenclature can differ from one manufacturer to another. Therefore, it is not uncommon to see pinouts numbered TxA, TxB, RxA and RxB. In such cases, it can be assumed that "A" is equivalent to "+" and "B" is equivalent to "–".

b) G.703 SELECTION SWITCH PROCEDURES

1. With the power to the relay off, remove the G.703 module (7R or 7S) as follows. Record the original location of the module to help ensure that the same or replacement module is inserted into the correct slot.
2. Simultaneously pull the ejector/inserter clips located at the top and at the bottom of each module in order to release the module for removal.
3. Remove the module cover screw.
4. Remove the top cover by sliding it towards the rear and then lift it upwards.
5. Set the timing selection switches (channel 1, channel 2) to the desired timing modes.

6. Replace the top cover and the cover screw.
7. Re-insert the G.703 module. Take care to ensure that the **correct** module type is inserted into the **correct** slot position. The ejector/inserter clips located at the top and at the bottom of each module must be in the disengaged position as the module is smoothly inserted into the slot. Once the clips have cleared the raised edge of the chassis, engage the clips simultaneously. When the clips have locked into position, the module is fully inserted.

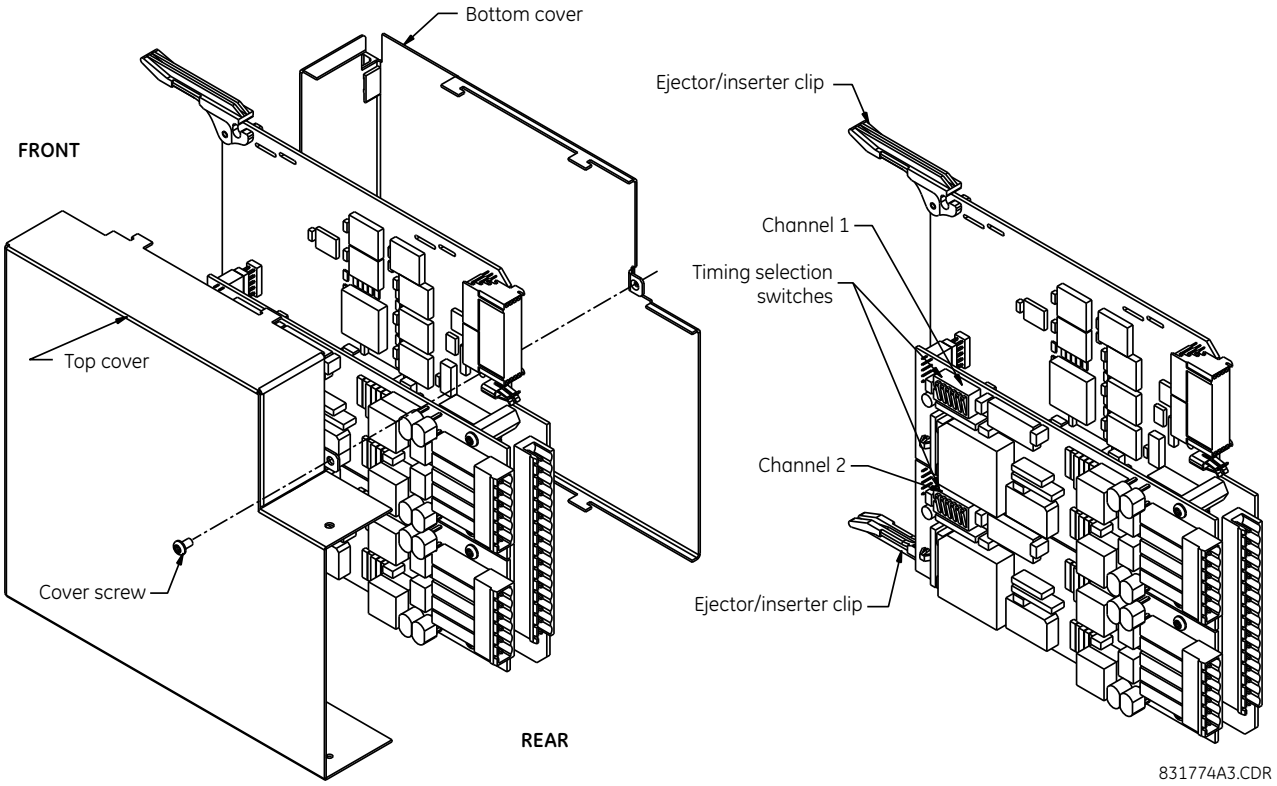

Figure 3–38: G.703 TIMING SELECTION SWITCH SETTING

Table 3–5: G.703 TIMING SELECTIONS

SWITCHES	FUNCTION
S1	OFF → octet timing disabled ON → octet timing 8 kHz
S5 and S6	S5 = OFF and S6 = OFF → loop timing mode S5 = ON and S6 = OFF → internal timing mode S5 = OFF and S6 = ON → minimum remote loopback mode S5 = ON and S6 = ON → dual loopback mode

c) G.703 OCTET TIMING

If octet timing is enabled (ON), this 8 kHz signal is asserted during the violation of bit 8 (LSB) necessary for connecting to higher order systems. When C70s are connected back-to-back, octet timing is disabled (OFF).

d) G.703 TIMING MODES

There are two timing modes for the G.703 module: internal timing mode and loop timing mode (default).

- **Internal Timing Mode:** The system clock is generated internally. Therefore, the G.703 timing selection should be in the internal timing mode for back-to-back (UR-to-UR) connections. For back-to-back connections, set for octet timing (S1 = OFF) and timing mode to internal timing (S5 = ON and S6 = OFF).
- **Loop Timing Mode:** The system clock is derived from the received line signal. Therefore, the G.703 timing selection should be in loop timing mode for connections to higher order systems. For connection to a higher order system (UR-

to-multiplexer, factory defaults), set to octet timing (S1 = ON) and set timing mode to loop timing (S5 = OFF and S6 = OFF).

The switch settings for the internal and loop timing modes are shown below:

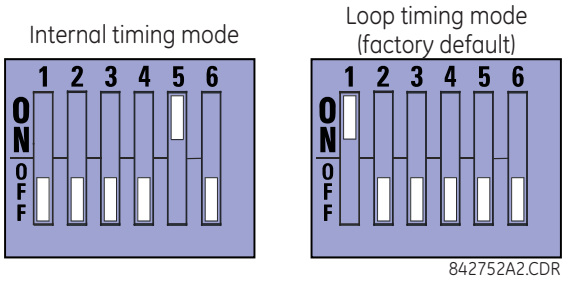

e) G.703 TEST MODES

In *minimum remote loopback* mode, the multiplexer is enabled to return the data from the external interface without any processing to assist in diagnosing G.703 line-side problems irrespective of clock rate. Data enters from the G.703 inputs, passes through the data stabilization latch which also restores the proper signal polarity, passes through the multiplexer and then returns to the transmitter. The differential received data is processed and passed to the G.703 transmitter module after which point the data is discarded. The G.703 receiver module is fully functional and continues to process data and passes it to the differential Manchester transmitter module. Since timing is returned as it is received, the timing source is expected to be from the G.703 line side of the interface.

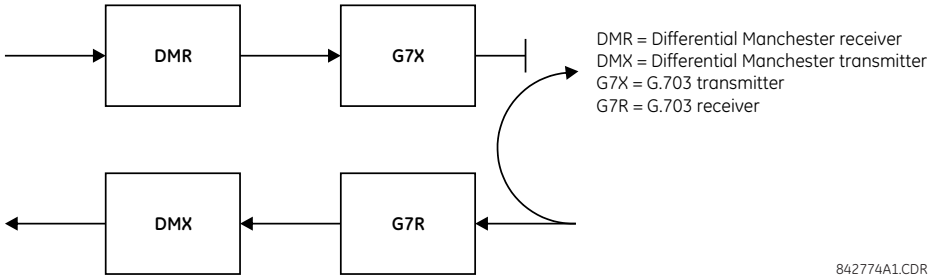

Figure 3–39: G.703 MINIMUM REMOTE LOOPBACK MODE

In *dual loopback mode*, the multiplexers are active and the functions of the circuit are divided into two with each receiver/transmitter pair linked together to deconstruct and then reconstruct their respective signals. Differential Manchester data enters the Differential Manchester receiver module and then is returned to the differential Manchester transmitter module. Likewise, G.703 data enters the G.703 receiver module and is passed through to the G.703 transmitter module to be returned as G.703 data. Because of the complete split in the communications path and because, in each case, the clocks are extracted and reconstructed with the outgoing data, in this mode there must be two independent sources of timing. One source lies on the G.703 line side of the interface while the other lies on the differential Manchester side of the interface.

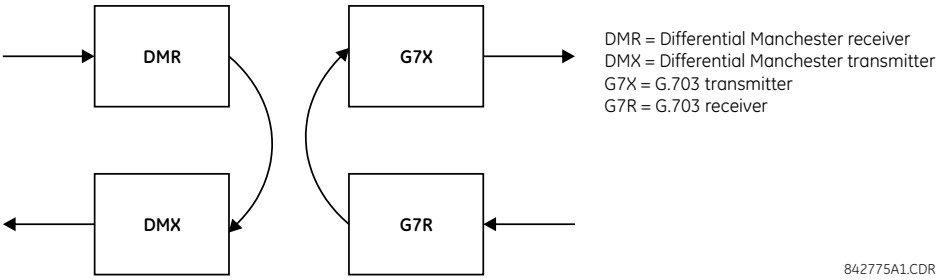

Figure 3–40: G.703 DUAL LOOPBACK MODE

a) DESCRIPTION

There are two RS422 inter-relay communications modules available: single-channel RS422 (module 7T) and dual-channel RS422 (module 7W). The modules can be configured to run at 64 kbps or 128 kbps. AWG 20-24 twisted shielded pair cable is recommended for external connections. These modules are protected by optically-isolated surge suppression devices.

The shield pins (6a and 7b) are internally connected to the ground pin (8a). Proper shield termination is as follows:

- Site 1: Terminate shield to pins 6a or 7b or both.
- Site 2: Terminate shield to COM pin 2b.

Match the clock terminating impedance with the impedance of the line.

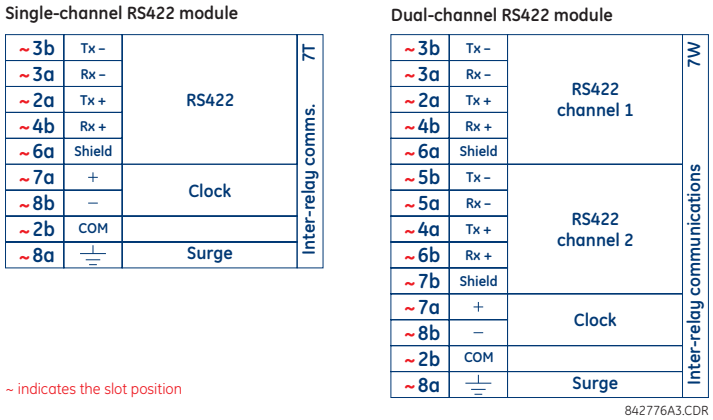

Figure 3–41: RS422 INTERFACE CONNECTIONS

The following figure shows the typical pin interconnection between two single-channel RS422 interfaces installed in slot W. All pin interconnections are to be maintained for a connection to a multiplexer.

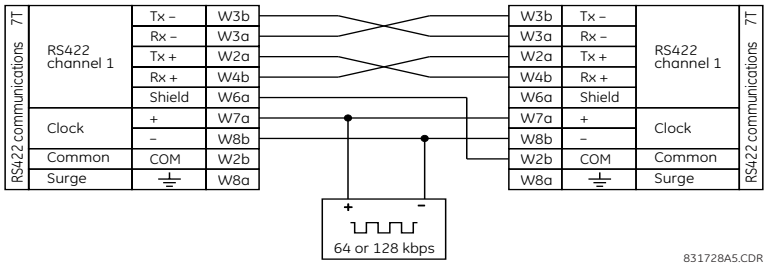

Figure 3–42: TYPICAL PIN INTERCONNECTION BETWEEN TWO RS422 INTERFACES

b) TWO-CHANNEL APPLICATION VIA MULTIPLEXERS

The RS422 interface can be used for single channel or two channel applications over SONET/SDH or multiplexed systems. When used in single-channel applications, the RS422 interface links to higher order systems in a typical fashion observing transmit (Tx), receive (Rx), and send timing (ST) connections. However, when used in two-channel applications, certain criteria must be followed since there is one clock input for the two RS422 channels. The system functions correctly when the following connections are observed and your data module has a terminal timing feature. Terminal timing is a common feature to most synchronous data units that allows the module to accept timing from an external source. Using the terminal timing feature, two channel applications can be achieved if these connections are followed: The send timing outputs from the multiplexer (data module 1), connects to the clock inputs of the UR–RS422 interface in the usual fashion. In addition, the send timing outputs of data module 1 is also paralleled to the terminal timing inputs of data module 2. By using this configuration, the timing for both data modules and both UR–RS422 channels are derived from a single clock source. As a

result, data sampling for both of the UR–RS422 channels is synchronized via the send timing leads on data module 1 as shown below. If the terminal timing feature is not available or this type of connection is not desired, the G.703 interface is a viable option that does not impose timing restrictions.

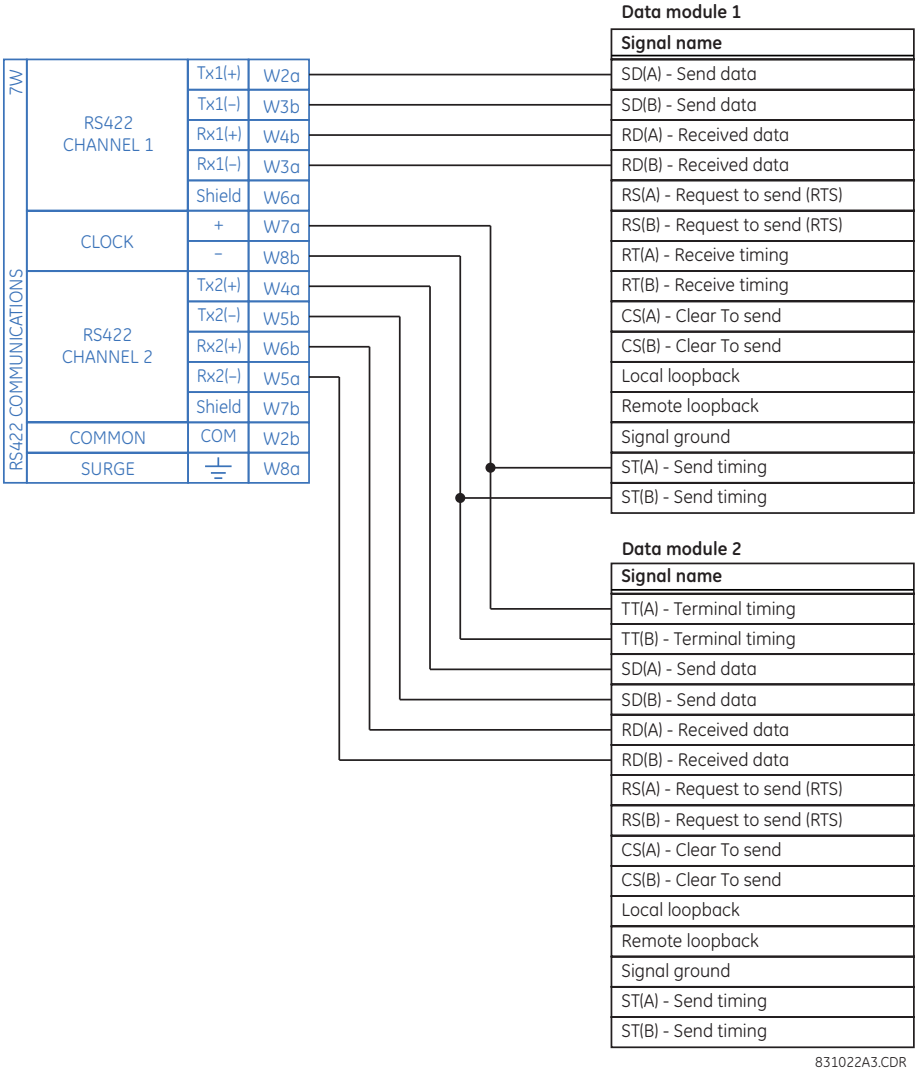

Figure 3–43: TIMING CONFIGURATION FOR RS422 TWO-CHANNEL, THREE-TERMINAL APPLICATION

Data module 1 provides timing to the C70 RS422 interface via the ST(A) and ST(B) outputs. Data module 1 also provides timing to data module 2 TT(A) and TT(B) inputs via the ST(A) and AT(B) outputs. The data module pin numbers have been omitted in the figure above since they vary by manufacturer.

c) TRANSMIT TIMING

The RS422 interface accepts one clock input for transmit timing. It is important that the rising edge of the 64 kHz transmit timing clock of the multiplexer interface is sampling the data in the center of the transmit data window. Therefore, it is important to confirm clock and data transitions to ensure proper system operation. For example, the following figure shows the positive edge of the Tx clock in the center of the Tx data bit.

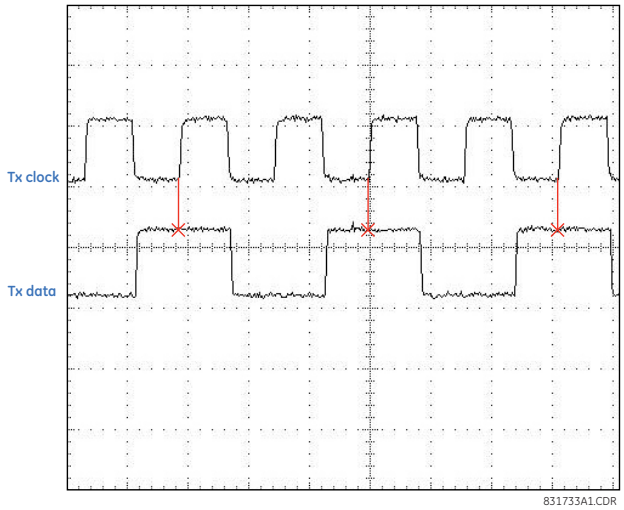

Figure 3–44: CLOCK AND DATA TRANSITIONS

d) RECEIVE TIMING

The RS422 interface utilizes NRZI-MARK modulation code and; therefore, does not rely on an Rx clock to recapture data. NRZI-MARK is an edge-type, invertible, self-clocking code.

To recover the Rx clock from the data-stream, an integrated DPLL (digital phase lock loop) circuit is utilized. The DPLL is driven by an internal clock, which is 16-times over-sampled, and uses this clock along with the data-stream to generate a data clock that can be used as the SCC (serial communication controller) receive clock.

3.3.5 IEEE C37.94 INTERFACE

The UR-series IEEE C37.94 communication modules (modules types 2I, 2J, 76, and 77) are designed to interface with IEEE C37.94 compliant digital multiplexers or an IEEE C37.94 compliant interface converter for use with direct input and output applications. The IEEE C37.94 standard defines a point-to-point optical link for synchronous data between a multiplexer and a teleprotection device. This data is typically 64 kbps, but the standard provides for speeds up to 64*n* kbps, where *n* = 1, 2,…, 12. The UR-series C37.94 communication modules are either 64 kbps (with *n* fixed at 1) or 128 kbps (with *n* fixed at 2). The frame is a valid International Telecommunications Union (ITU-T) recommended G.704 pattern from the standpoint of framing and data rate. The frame is 256 bits and is repeated at a frame rate of 8000 Hz, with a resultant bit rate of 2048 kbps.

The specifications for the module are as follows:.

- IEEE standard: C37.94 for 2 × 64 kbps optical fiber interface (for 76 and 77 modules)
- Fiber optic cable type: 50 nm or 62.5 µm core diameter optical fiber
- Fiber optic mode: multimode
- Fiber optic cable length: up to 2 km
- Fiber optic connector: type ST
- Wavelength: 820 ±40 nm
- Connection: as per all fiber optic connections, a Tx-to-Rx connection is required

The UR-series C37.94 communication module can be connected directly to any compliant digital multiplexer that supports the IEEE C37.94 standard shown as follows.

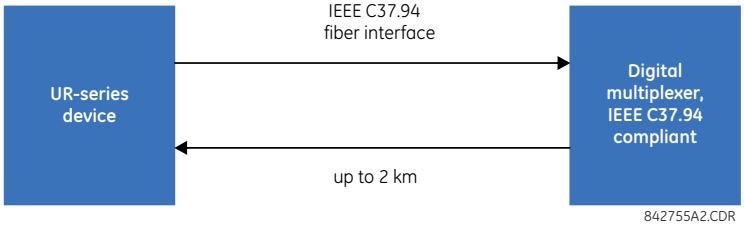

The UR-series C37.94 communication module can be connected to the electrical interface (G.703, RS422, or X.21) of a non-compliant digital multiplexer via an optical-to-electrical interface converter that supports the IEEE C37.94 standard, shown as follows.

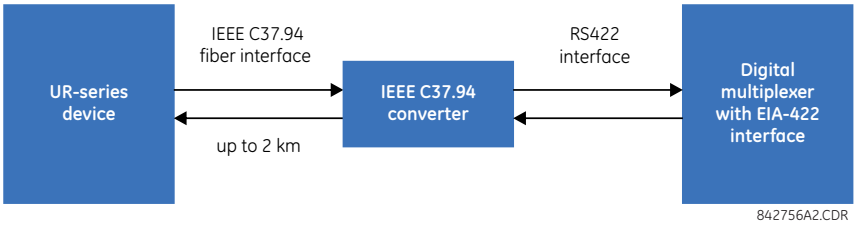

In 2008, GE Grid Solutions released revised modules 76 and 77 for C37.94 communication to enable multi-ended fault location functionality with firmware 5.60 release and higher. All modules 76 and 77 shipped the change support this feature and are fully backward compatible with firmware releases below 5.60. For customers using firmware release 5.60 and higher, the module can be identified with "Rev D" printed on the module and is to be used on all ends of C70 communication for two and three terminal applications. Failure to use it at all ends results in intermittent communication alarms. For customers using firmware revisions below 5.60, it is not required to match the revision of the modules installed.

The UR-series C37.94 communication module has six switches to set the clock configuration. The following figure shows the functions of these control switches.

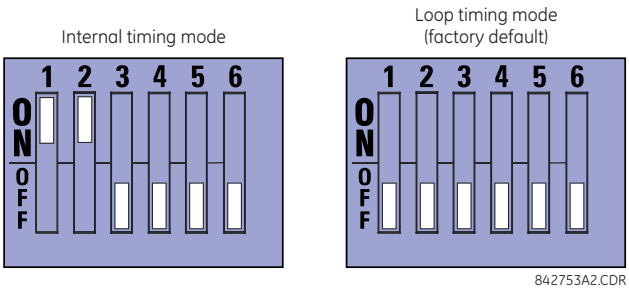

For the internal timing mode, the system clock is generated internally. Therefore, the timing switch selection should be internal timing for relay 1 and loop timed for relay 2. There must be only one timing source configured.

For the looped timing mode, the system clock is derived from the received line signal. Therefore, the timing selection should be in loop timing mode for connections to higher order systems.

The IEEE C37.94 communications module cover removal procedure is as follows:

1. With power to the relay off, remove the IEEE C37.94 module (type 2I, 2J, 76 or 77 module) as follows. Record the original location of the module to help ensure that the same or replacement module is inserted into the correct slot.
2. Simultaneously pull the ejector/inserter clips located at the top and at the bottom of each module in order to release the module for removal.
3. Remove the module cover screw.
4. Remove the top cover by sliding it towards the rear and then lift it upwards.

5. Set the timing selection switches (channel 1, channel 2) to the desired timing modes (see description above).
6. Replace the top cover and the cover screw.
7. Re-insert the IEEE C37.94 module. Take care to ensure that the **correct** module type is inserted into the **correct** slot position. The ejector/inserter clips located at the top and at the bottom of each module must be in the disengaged position as the module is smoothly inserted into the slot. Once the clips have cleared the raised edge of the chassis, engage the clips simultaneously. When the clips have locked into position, the module is fully inserted.

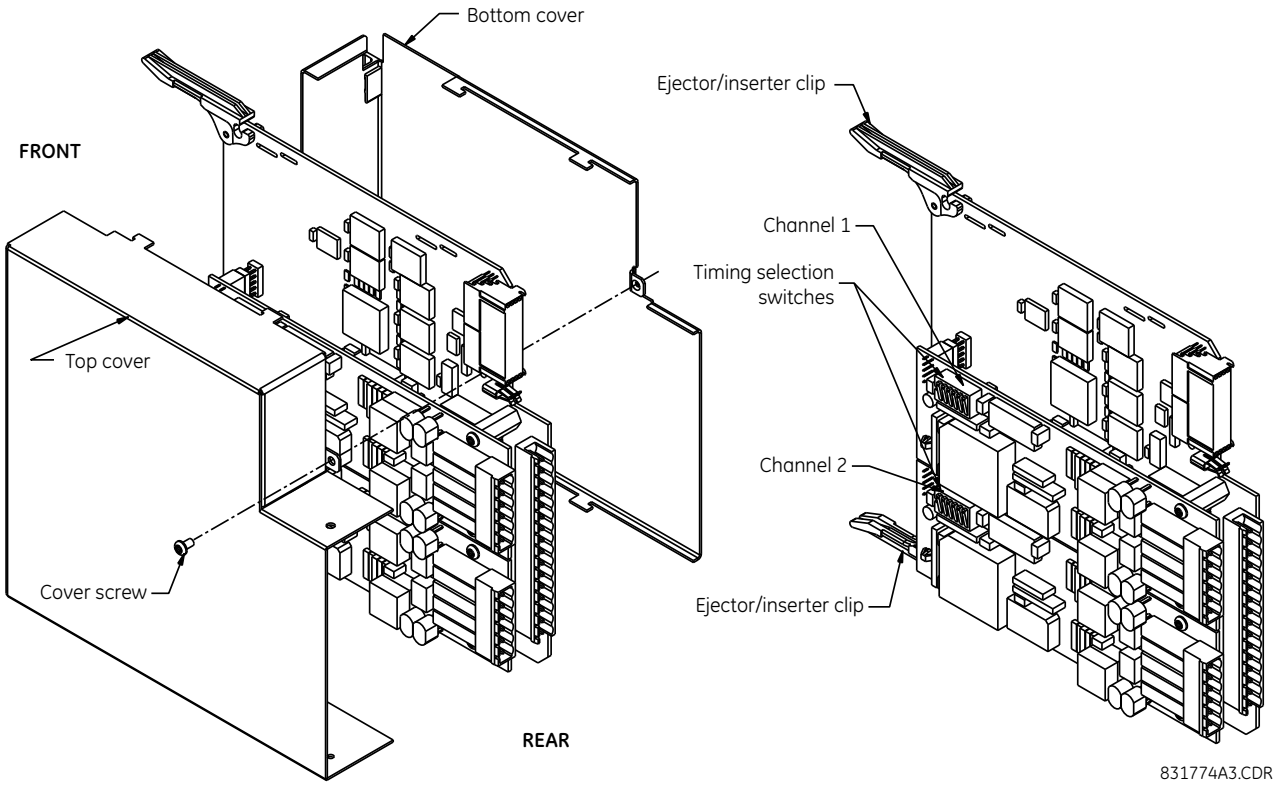

Figure 3–45: IEEE C37.94 TIMING SELECTION SWITCH SETTING

Modules shipped since January 2012 have status LEDs that indicate the status of the DIP switches, as shown in the following figure.

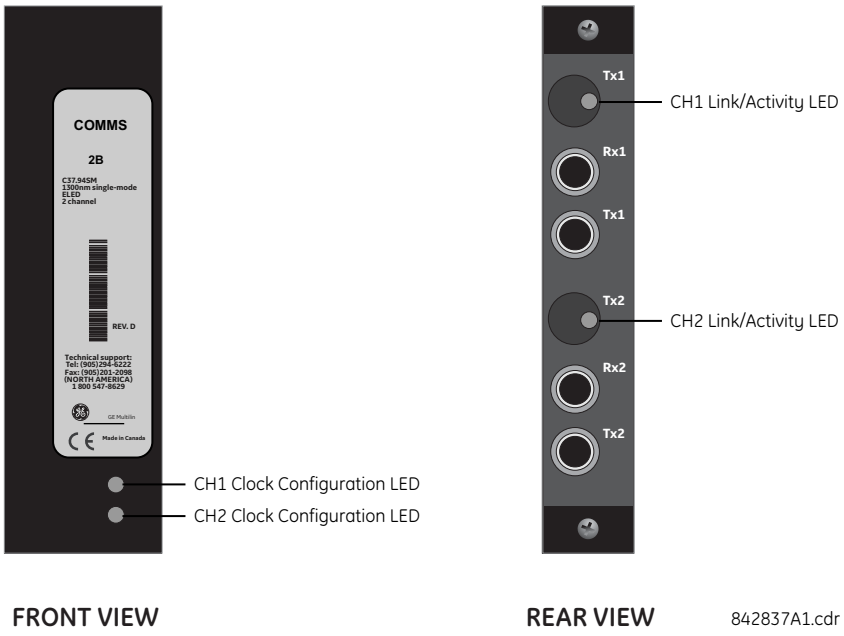

Figure 3–46: STATUS LEDS

The clock configuration LED status is as follows:

- Flashing green — loop timing mode while receiving a valid data packet
- Flashing yellow — internal mode while receiving a valid data packet
- Solid red — (switch to) internal timing mode while not receiving a valid data packet

The link/activity LED status is as follows:

- Flashing green — FPGA is receiving a valid data packet
- Solid yellow — FPGA is receiving a "yellow bit" and remains yellow for each "yellow bit"
- Solid red — FPGA is not receiving a valid packet or the packet received is invalid

4.1.1 INTRODUCTION

The EnerVista UR Setup software provides a graphical user interface (GUI) as one of two human interfaces to a UR device. The alternate human interface is implemented via the device's faceplate keypad and display (see the Faceplate Interface section in this chapter).

The EnerVista UR Setup software provides a single facility to configure, monitor, maintain, and troubleshoot the operation of relay functions, connected over local or wide-area networks. It can be used while disconnected (offline) or connected (online) to a UR device. In offline mode, settings files can be created for eventual downloading to the device. In online mode, communication with the device is real-time.

The EnerVista UR Setup software is provided with every C70 relay and runs on Microsoft Windows XP, 7, and Server 2008. This chapter provides a summary of the basic EnerVista UR Setup software interface features. The EnerVista UR Setup Help File provides details for getting started and using the EnerVista UR Setup software interface.

4.1.2 CREATING A SITE LIST

To start using the EnerVista UR Setup software, site and device definition are required. See the EnerVista UR Setup Help File or refer to the EnerVista UR Setup Software section in Chapter 1 for details.

4.1.3 ENERVISTA UR SETUP OVERVIEW

a) ENGAGING A DEVICE

The EnerVista UR Setup software can be used in online mode (relay connected) to directly communicate with the C70 relay. Communicating relays are organized and grouped by communication interfaces and into sites. Sites can contain any number of relays selected from the UR-series of relays.

b) USING SETTINGS FILES

The EnerVista UR Setup software interface supports three ways of handling changes to relay settings:

- In offline mode (relay disconnected) to create or edit relay settings files for later download to communicating relays
- While connected to a relay to modify relay settings, and then save the settings to the relay
- You can create/edit settings files and then write them to the relay while the interface is connected to the relay

Settings files are organized on the basis of file names assigned by the user. A settings file contains data pertaining to the following types of relay settings:

- Device definition
- Product setup
- System setup
- FlexLogic
- Grouped elements
- Control elements
- Inputs/outputs
- Remote resources
- Testing

Factory default values are supplied and can be restored after any changes.

The following communications settings are not transferred to the C70 with settings files:

Modbus Slave Address
Modbus TCP Port Number
RS485 COM2 Baud Rate
RS485 COM2 Parity
COM2 Minimum Response Time

COM2 Selection
RRTD Slave Address
RRTD Baud Rate
IP Address
IP Subnet Mask
IP Routing

When a settings file is loaded to a C70 that is in-service, the following sequence occurs:

1. The C70 takes itself out of service.
2. The C70 issues a **UNIT NOT PROGRAMMED** major self-test error.
3. The C70 closes the critical fail contact.

c) CREATING AND EDITING FLEXLOGIC

You create or edit a FlexLogic equation in order to customize the relay. You can subsequently view the automatically generated logic diagram.

d) VIEWING ACTUAL VALUES

You can view real-time relay data such as input/output status and measured parameters.

e) VIEWING TRIGGERED EVENTS

While the interface is in either online or offline mode, you can view and analyze data generated by triggered specified parameters, via one of the following:

- **Event recorder**

  The event recorder captures contextual data associated with the last 1024 events, listed in chronological order from most recent to oldest.

- **Oscillography**

  The oscillography waveform traces and digital states are used to provide a visual display of power system and relay operation data captured during specific triggered events.

f) FILE SUPPORT

- **Execution:** Any EnerVista UR Setup file that is opened launches the application or provides focus to the already opened application. If the file was a settings file (has a `URS` extension) that had been removed from the Settings List tree menu, it is added back to the Settings List tree menu.
- **Drag and Drop:** The Site List and Settings List control bar windows are each mutually a drag source and a drop target for device-order-code-compatible files or individual menu items. Also, the Settings List control bar window and any Windows Explorer directory folder are each mutually a file drag source and drop target.

  New files that are dropped into the Settings List window are added to the tree, which is automatically sorted alphabetically with respect to settings file names. Files or individual menu items that are dropped in the selected device menu in the Site List window are automatically sent to the online communicating device.

g) FIRMWARE UPGRADES

The firmware of a C70 device can be upgraded, locally or remotely, via the EnerVista UR Setup software. The corresponding instructions are provided by the EnerVista UR Setup Help file under the topic “Upgrading Firmware”.

If you are upgrading from version 7.0 or 7.1 to 7.2 or later, some CPU modules require a new boot version. Update this first in EnerVista under **Maintenance > Update Firmware**. Ensure that power to the unit is not lost during this update.

Before backing up settings and upgrading, set the **Settings > Product Setup > Security > Dual Permission Security Access > Remote Setting Authorized** and **Local Setting Authorized** settings to "ON." Otherwise, the upgrade is blocked and results in an "Unable to put relay in flash mode" message.

If using CyberSentry security, also ensure that the relay and firmware are not locked under the **Settings > Product Setup > Security > Supervisory** settings. A Supervisor role is required for these settings.

NOTE

Modbus addresses assigned to firmware modules, features, settings, and corresponding data items (that is, default values, minimum/maximum values, data type, and item size) can change slightly from version to version of firmware. The addresses are rearranged when new features are added or existing features are enhanced or modified. The **EEPROM DATA ERROR** message displayed after upgrading/downgrading the firmware is a resettable, self-test message intended to inform users that the Modbus addresses have changed with the upgraded firmware. This message does not signal any problems when appearing after firmware upgrades.

4.1.4 ENERVISTA UR SETUP MAIN WINDOW

The EnerVista UR Setup software main window supports the following primary display components:

1. Title bar that shows the pathname of the active data view
2. Main window menu bar
3. Main window tool bar
4. Site list control bar window
5. Settings list control bar window
6. Device data view windows, with common tool bar
7. Settings file data view windows, with common tool bar
8. Workspace area with data view tabs
9. Status bar
10. Quick action hot links

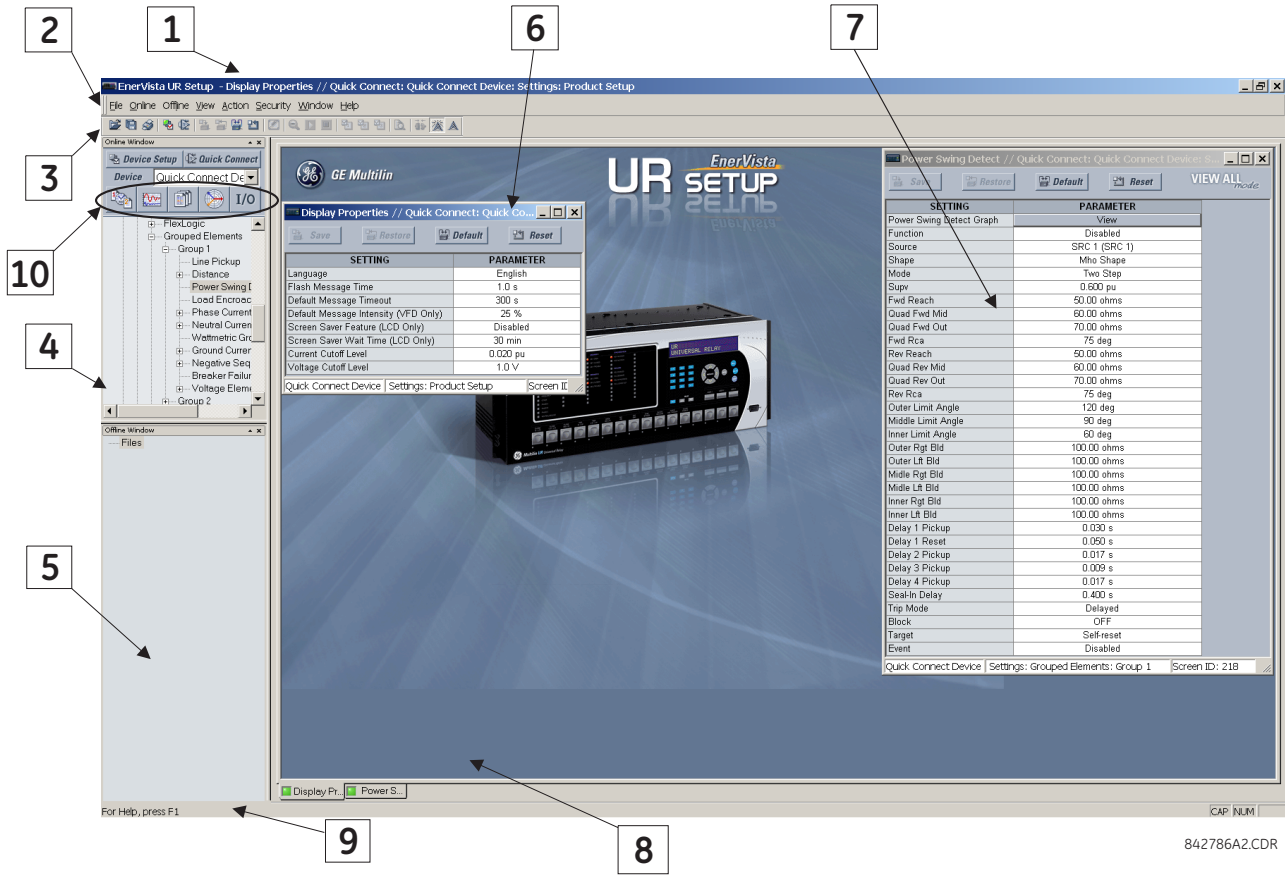

Figure 4–1: ENERVISTA UR SETUP SOFTWARE MAIN WINDOW

4.2.1 SETTINGS TEMPLATES

Setting file templates simplify the configuration and commissioning of multiple relays that protect similar assets. An example of this is a substation that has 10 similar feeders protected by 10 UR-series F60 relays.

In these situations, typically 90% or greater of the settings are identical between all devices. The templates feature allows engineers to configure and test these common settings, then lock them so that they are not available to users. For example, these locked down settings can be hidden from view for field engineers, allowing them to quickly identify and concentrate on the specific settings.

The remaining settings (typically 10% or less) can be specified as editable and be made available to field engineers installing the devices. These are settings such as protection element pickup values and CT and VT ratios.

The settings template mode allows the user to define which settings are visible in EnerVista UR Setup. Settings templates can be applied to both settings files (settings file templates) and online devices (online settings templates). The functionality is identical for both purposes.

Settings files conversion from previous firmware versions is supported.

a) ENABLING THE SETTINGS TEMPLATE

The settings file template feature is disabled by default. The following procedure describes how to enable the settings template for UR-series settings files.

1. Select a settings file from the offline window of the EnerVista UR Setup main screen.
2. Right-click the selected device or settings file and select the **Template Mode > Create Template** option.

The settings file template is now enabled and the file tree displayed in light blue. The settings file is now in template editing mode.

Alternatively, the settings template can also be applied to online settings. The following procedure describes this process.

1. Select an installed device from the online window of the EnerVista UR Setup main screen.
2. Right-click the selected device and select the **Template Mode > Create Template** option.

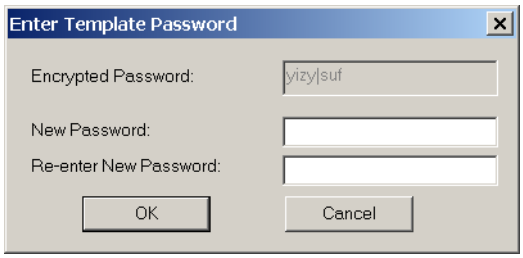

The software prompts for a template password. This password is required to use the template feature and must be at least four characters in length.

3. Enter and re-enter the new password, then click **OK** to continue.

The online settings template is now enabled. The device is now in template editing mode.

b) EDITING THE SETTINGS TEMPLATE

The settings template editing feature allows the user to specify which settings are available for viewing and modification in EnerVista UR Setup. By default, all settings except the FlexLogic equation editor settings are locked.

1. With the template already enabled, locate the device or settings file in the Online or Offline Window area in the software.
2. Right-click the device or file and select the **Template Mode > Edit Template** option to place the device in template editing mode. If prompted, enter the template password then click **OK**.
3. Open the relevant settings window that contains settings to be specified as viewable.

By default, all settings are specified as locked and displayed against a grey background. The icon on the upper right of the settings window also indicates that the EnerVista software is in **EDIT mode**. The following example shows the phase time overcurrent settings window in edit mode.

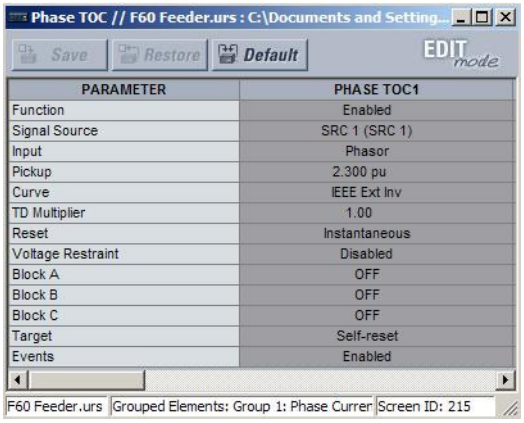

Figure 4–2: SETTINGS TEMPLATE VIEW, ALL SETTINGS SPECIFIED AS LOCKED

4. Specify the settings to make viewable by clicking them.

   The setting available to view is displayed against a yellow background as shown below.

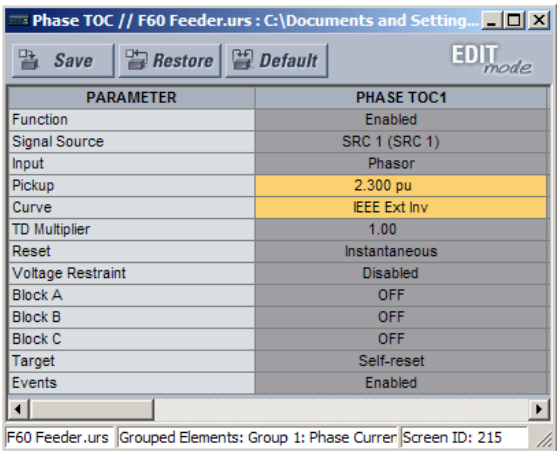

Figure 4–3: SETTINGS TEMPLATE VIEW, TWO SETTINGS SPECIFIED AS EDITABLE

5. Click on **Save** to save changes to the settings template.
6. Proceed through the settings tree to specify all viewable settings.

   The next time that the device/settings are accessed, only those specified as viewable/editable display in the menu hierarchy.

c) ADDING PASSWORD PROTECTION TO A TEMPLATE

GE recommends that templates be saved with password protection to maximize security.

NOTE When templates are created for online settings, the password is added during the initial template creation step. It does not need to be added after the template is created.

To add password protection to a settings file template:

1. In the Offline Window area, right-click the device and select the T**emplate Mode > Password Protect Template** option.

The software prompts for a template password. This password must be at least four characters in length.

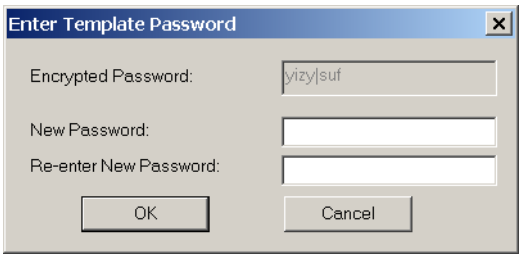

2. Enter and re-enter the new password, then click **OK** to continue.

The settings file template is now secured with password protection.

d) VIEWING THE SETTINGS TEMPLATE

Once all necessary settings are specified for viewing, users are able to view the settings template on the online device or settings file. There are two ways to specify the settings view with the settings template feature:

- Display only those settings available for editing
- Display all settings, with settings not available for editing greyed-out

Use the following procedure to only display settings available for editing:

1. Right-click the device in the Online or Offline Window area and apply the template by selecting the **Template Mode > View In Template Mode** option.
2. Enter the template password then click **OK** to apply the template.

Once the template has been applied, users are limited to view and edit the settings specified by the template. The effect of applying the template to the phase time overcurrent settings is shown below.

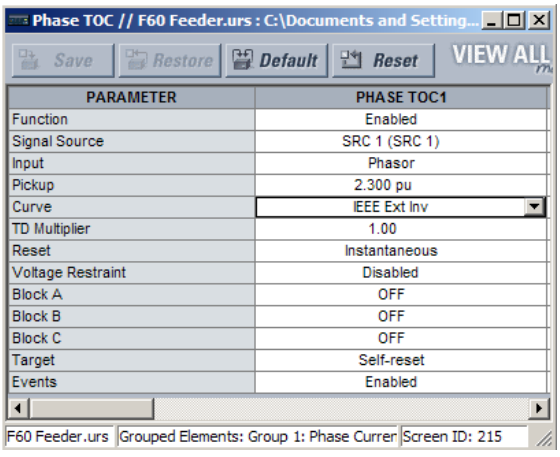

Phase time overcurrent settings window without template applied.

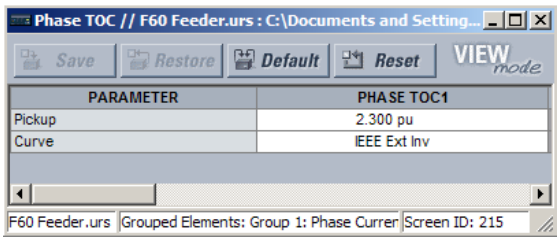

Phase time overcurrent window with template applied via the **Template Mode > View In Template Mode** command. The template specifies that only the Pickup and Curve settings be available.

842858A1.CDR

Figure 4–4: APPLYING TEMPLATES VIA THE VIEW IN TEMPLATE MODE COMMAND

Viewing the settings in template mode also modifies the settings tree, showing only the settings categories that contain editable settings. The effect of applying the template to a typical settings tree view is shown below.

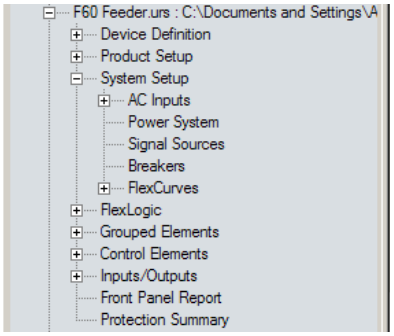

Typical settings tree view without template applied.

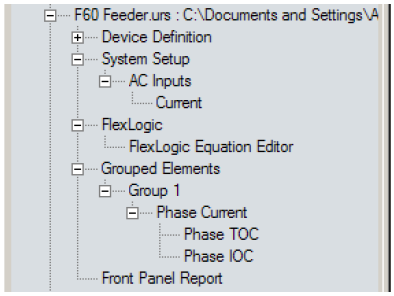

Typical settings tree view with template applied via the **Template Mode > View In Template Mode** command.

842860A1.CDR

Figure 4–5: APPLYING TEMPLATES VIA THE VIEW IN TEMPLATE MODE SETTINGS COMMAND

Use the following procedure to display settings available for editing and settings locked by the template.

1. Right-click the device in the Online or Offline Window area and apply the template by selecting the **Template Mode > View All Settings** option.
2. Enter the template password then click **OK** to apply the template.

Once the template has been applied, users are limited to edit the settings specified by the template, but all settings are shown. The effect of applying the template to the phase time overcurrent settings is shown below.

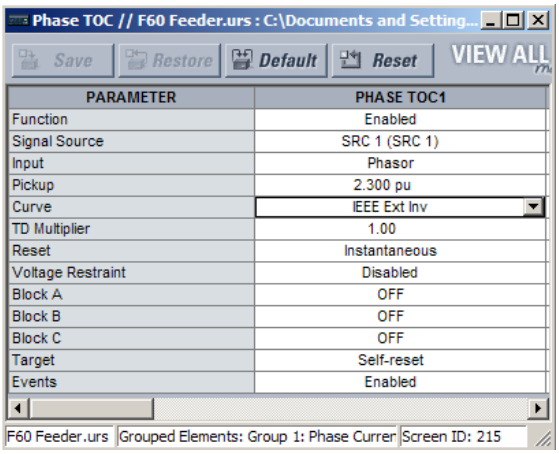

Phase time overcurrent settings window without template applied.

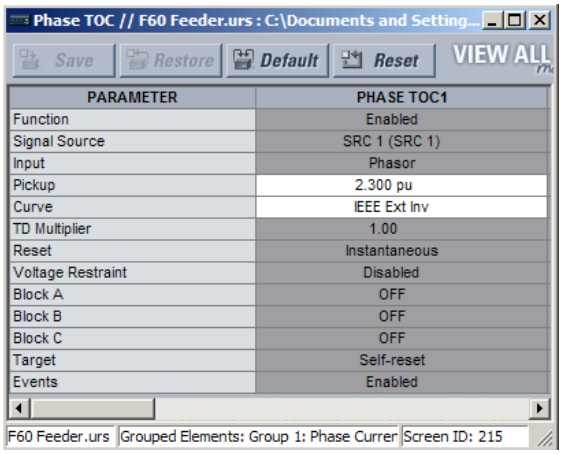

Phase time overcurrent window with template applied via the **Template Mode > View All Settings** command. The template specifies that only the Pickup and Curve settings be available.

842859A1.CDR

Figure 4–6: APPLYING TEMPLATES VIA THE VIEW ALL SETTINGS COMMAND

e) REMOVING THE SETTINGS TEMPLATE

Once a settings template is removed, it cannot be reapplied and a new settings template needs to be defined before use.

1. Right-click the device in the Online or Offline Window area and select the **Template Mode > Remove Template** option.
2. Enter the template password and click **OK** to continue.

3. Verify one more time that you want to remove the template by clicking **Yes**.

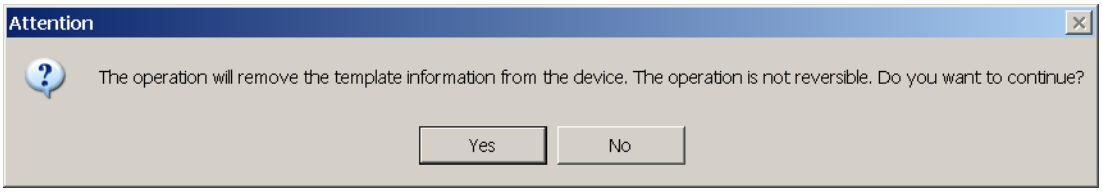

The EnerVista software removes all template information and all settings are available.

4.2.2 SECURING AND LOCKING FLEXLOGIC EQUATIONS

The UR allows users to secure parts or all of a FlexLogic equation, preventing unauthorized viewing or modification of critical FlexLogic applications. This is accomplished using the settings template feature to lock individual entries within FlexLogic equations.

Secured FlexLogic equations remain secure when files are sent to and retrieved from any UR-series device.

a) LOCKING FLEXLOGIC EQUATION ENTRIES

To lock individual entries of a FlexLogic™ equation:

1. Right-click the settings file or online device and select the **Template Mode > Create Template** item to enable the settings template feature.
2. If prompted, enter the template password.
3. Select the **FlexLogic > FlexLogic Equation Editor** settings menu item.

   By default, all FlexLogic™ entries are specified as viewable and displayed against a yellow background. The icon on the upper right of the window also indicates that EnerVista UR Setup is in **EDIT mode**.
4. Specify the entries to lock by clicking on them.

   The locked entries display against a grey background as shown in the example.

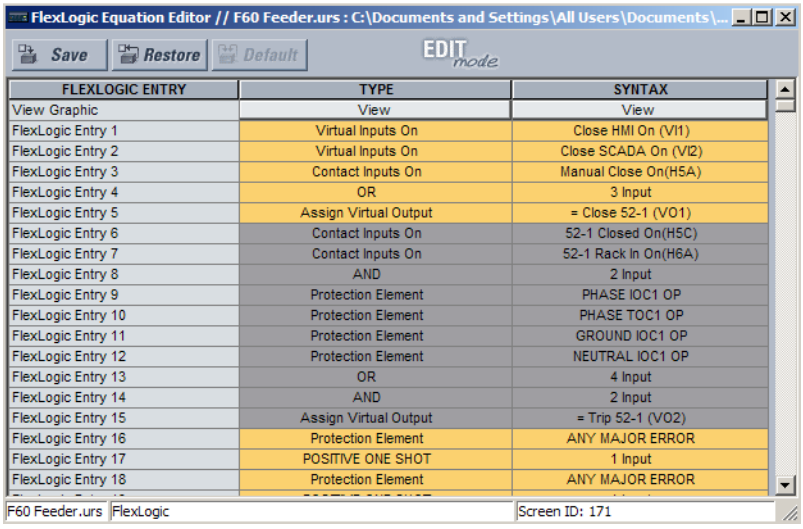

Figure 4–7: LOCKING FLEXLOGIC ENTRIES IN EDIT MODE

5. Click the **Save** button to save and apply changes to the settings template.
6. Select the **Template Mode > View In Template Mode** option to view the template.
7. Optionally apply a password to the template by right-clicking the device and selecting the **Template Mode > Password Protect Template** option.

Once the template has been applied, users are limited to view and edit the FlexLogic entries not locked by the template. The effect of applying the template to the FlexLogic entries in the above procedure is shown below.

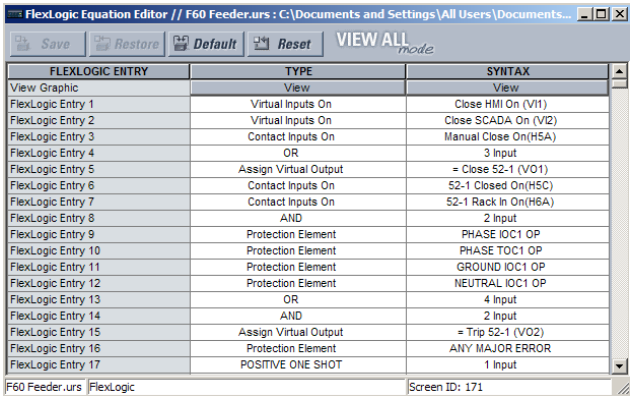

Typical FlexLogic™ entries without template applied.

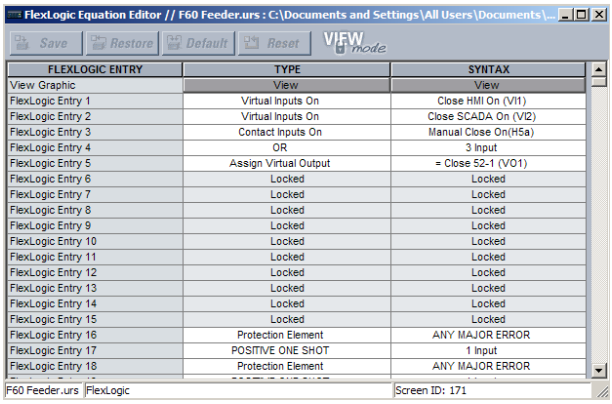

Typical FlexLogic™ entries locked with template via the **Template Mode > View In Template Mode** command.

842861A1.CDR

Figure 4–8: LOCKING FLEXLOGIC ENTRIES THROUGH SETTING TEMPLATES

The FlexLogic entries are also shown as locked in the graphical view (as shown below) and on the front panel display.

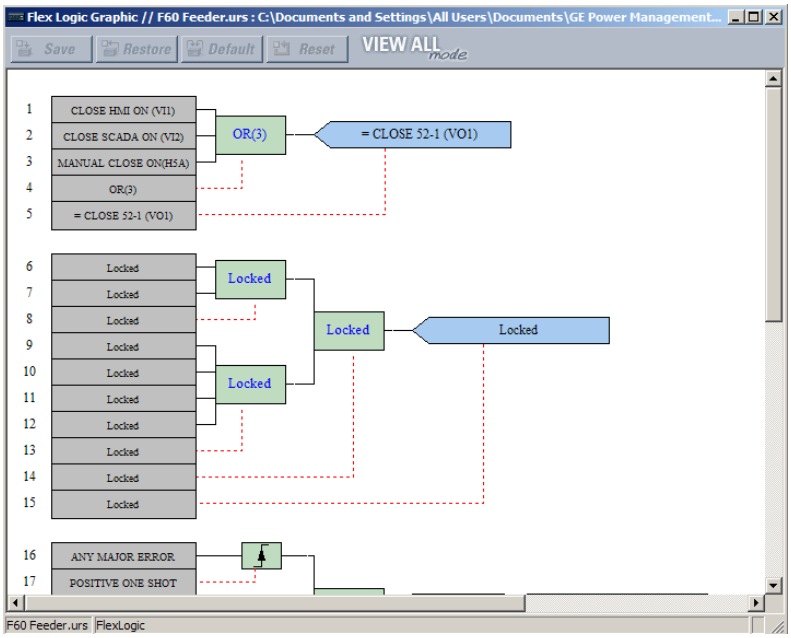

Figure 4–9: SECURED FLEXLOGIC IN GRAPHICAL VIEW

b) LOCKING FLEXLOGIC EQUATIONS TO A SERIAL NUMBER

A settings file and associated FlexLogic equations also can be locked to a UR serial number. Once FlexLogic entries in a settings file have been secured, use the following procedure to lock the settings file to a serial number. A serial number is viewable under **Actual Values > Product Info > Model Information**, the inside front panel, and the rear of the device.

8. Right-click the setting file in the Offline Window area and select the **Edit Settings File Properties** option. The window opens.

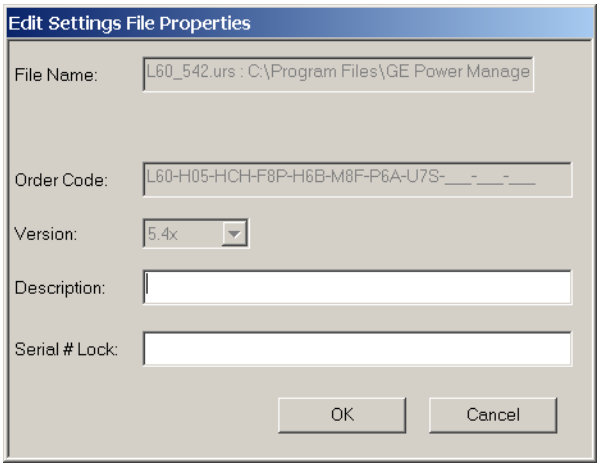

Figure 4–10: TYPICAL SETTINGS FILE PROPERTIES WINDOW

9. Enter the serial number of the C70 device to lock to the settings file in the **Serial # Lock** field.
10. Click the **OK** button to apply the change. The serial number is not validated.

The settings file and corresponding secure FlexLogic equations are now locked to the C70 device specified by the serial number.

4.2.3 SETTINGS FILE TRACEABILITY

A traceability feature for settings files allows the user to quickly determine if the settings in a C70 device have been changed since the time of installation from a settings file. When a settings file is transferred to a C70 device, the date, time, and serial number of the C70 are sent back to EnerVista UR Setup and added to the settings file on the local computer. This information can be compared with the C70 actual values at any later date to determine if security has been compromised.

The traceability information is only included in the settings file if a complete settings file is either transferred to the C70 device or obtained from the C70 device. Any partial settings transfers by way of drag and drop do not add the traceability information to the settings file.

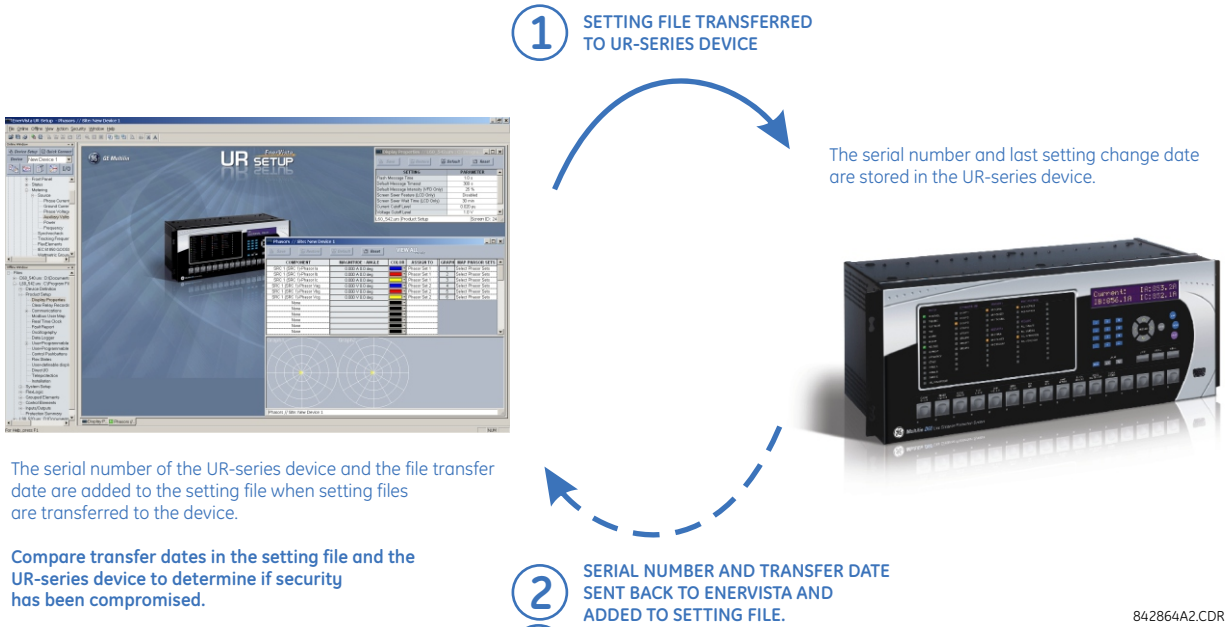

Figure 4–11: SETTINGS FILE TRACEABILITY MECHANISM

With respect to the above diagram, the traceability feature is used as follows.

1. The transfer date of a setting file written to a C70 is logged in the relay and can be viewed via EnerVista UR Setup or the front panel display. Likewise, the transfer date of a setting file saved to a local computer is logged in EnerVista UR Setup.
2. Comparing the dates stored in the relay and on the settings file at any time in the future indicates if any changes have been made to the relay configuration since the settings file was saved.

a) SETTINGS FILE TRACEABILITY INFORMATION

The serial number and file transfer date are saved in the settings files when they are sent to a C70 device.

The C70 serial number and file transfer date are included in the settings file device definition within the EnerVista UR Setup offline window as shown in the example below.

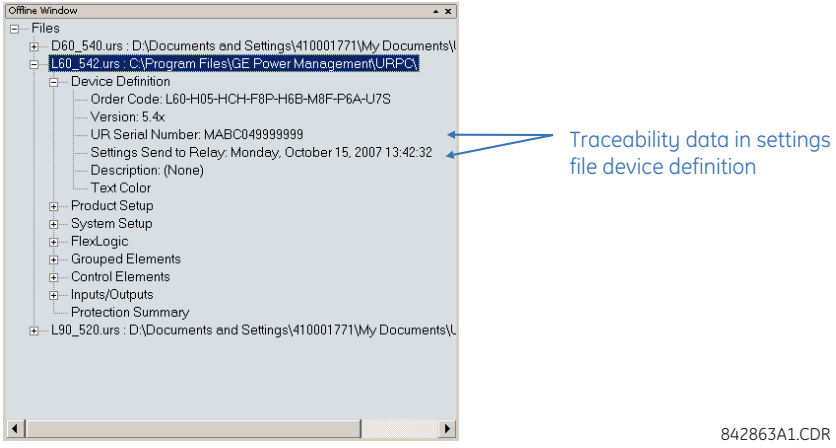

Figure 4–12: DEVICE DEFINITION SHOWING TRACEABILITY DATA

This information is also available in printed settings file reports as shown in the example below.

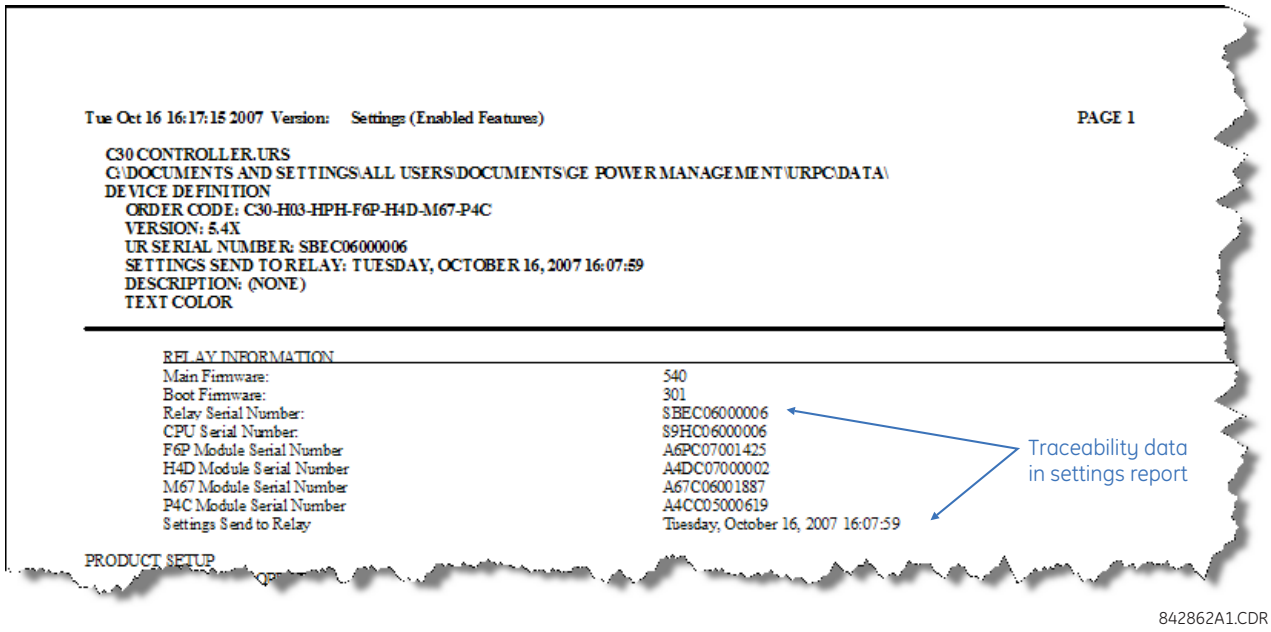

842862A1.CDR

Figure 4–13: SETTINGS FILE REPORT SHOWING TRACEABILITY DATA

b) ONLINE DEVICE TRACEABILITY INFORMATION

The C70 serial number and file transfer date are available for an online device through the actual values. Select the **Actual Values > Product Info > Model Information** menu item within the EnerVista UR Setup online window as shown in the example below.

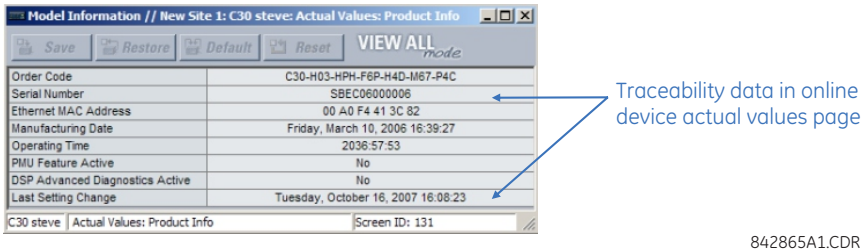

842865A1.CDR

Figure 4–14: TRACEABILITY DATA IN ACTUAL VALUES WINDOW

This information is also available from the front panel display through the following actual values:

ACTUAL VALUES ⇨⇩ PRODUCT INFO ⇨ MODEL INFORMATION ⇨⇩ SERIAL NUMBER
ACTUAL VALUES ⇨⇩ PRODUCT INFO ⇨ MODEL INFORMATION ⇨⇩ LAST SETTING CHANGE

c) ADDITIONAL TRACEABILITY RULES

The following additional rules apply for the traceability feature

- If the user changes any settings within the settings file in the offline window, then the traceability information is removed from the settings file.
- If the user creates a new settings file, then no traceability information is included in the settings file.
- If the user converts an existing settings file to another revision, then any existing traceability information is removed from the settings file.
- If the user duplicates an existing settings file, then any traceability information is transferred to the duplicate settings file.

a) ENHANCED FACEPLATE

The front panel interface is one of two supported interfaces, the other interface being EnerVista UR Setup software. The front panel interface consists of LED panels, an RS232 port, keypad, LCD display, control pushbuttons, and optional user-programmable pushbuttons.

The faceplate is hinged to allow easy access to the removable modules.

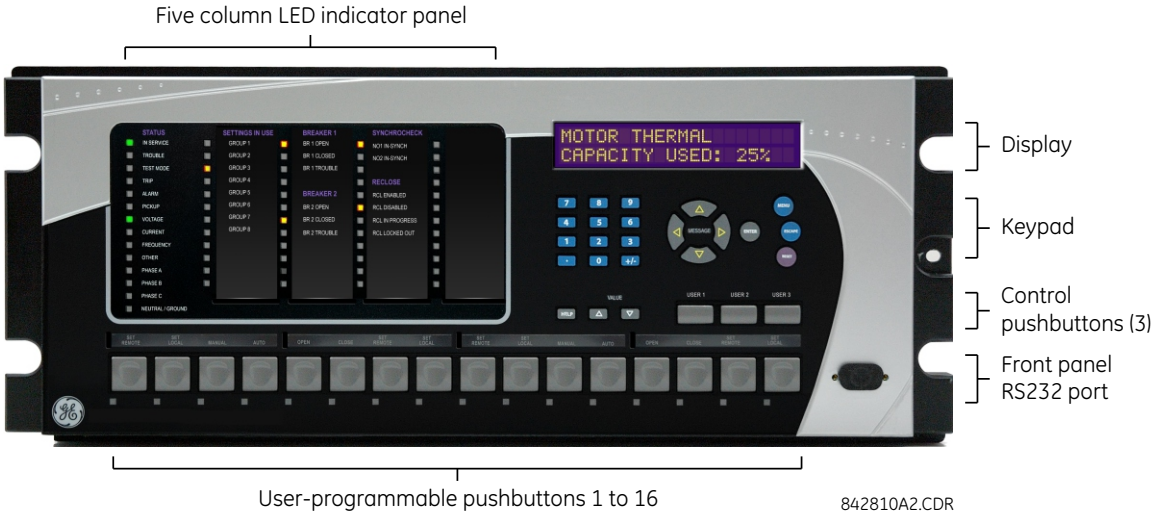

Figure 4–15: UR-SERIES ENHANCED FACEPLATE

b) BASIC FACEPLATE

There are two interfaces: the front panel and the EnerVista UR Setup software. The front panel interface consists of LED panels, an RS232 port, keypad, LCD display, control pushbuttons, and optional user-programmable pushbuttons.

The faceplate is hinged to allow easy access to the removable modules. There is also a removable dust cover that fits over the faceplate that must be removed in order to access the keypad panel. The following figure shows the horizontal arrangement of the faceplate panels.

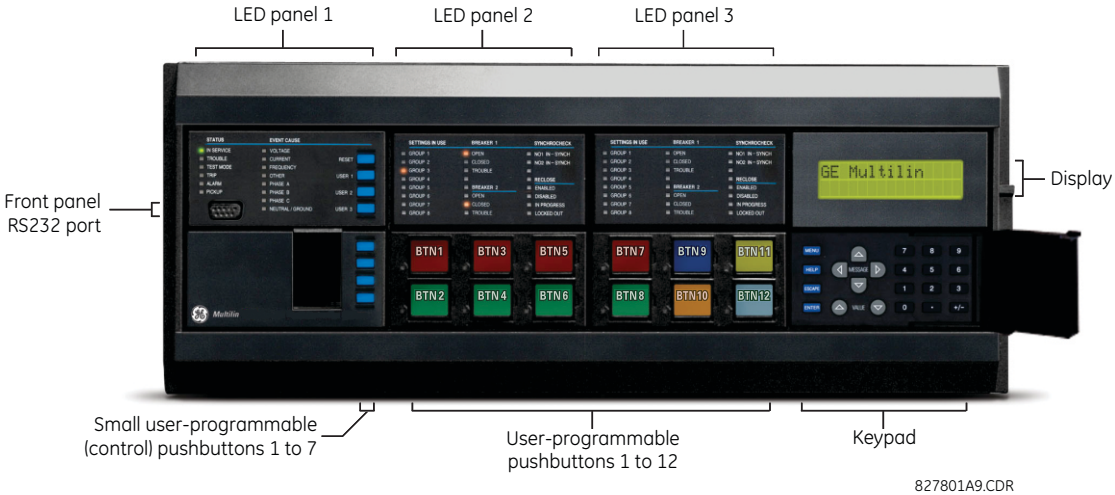

Figure 4–16: UR-SERIES STANDARD HORIZONTAL FACEPLATE PANELS

The following figure shows the vertical arrangement of the faceplate panels for relays ordered with the vertical option.

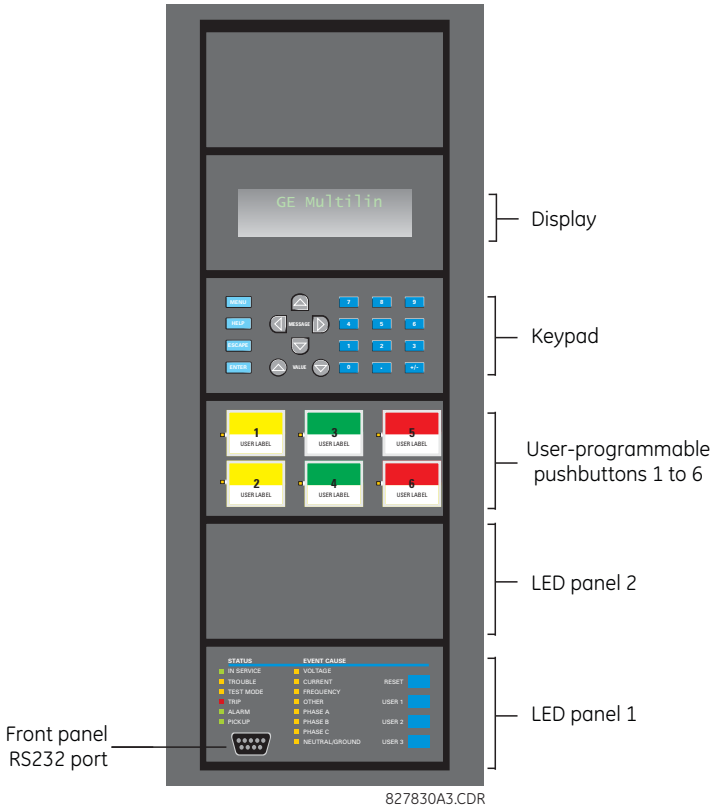

Figure 4–17: UR-SERIES STANDARD VERTICAL FACEPLATE PANELS

4.3.2 LED INDICATORS

a) ENHANCED FACEPLATE

The enhanced front panel display provides five columns of LED indicators. The first column contains 14 status and event cause LEDs, and the next four columns contain the 48 user-programmable LEDs.

The RESET key is used to reset any latched LED indicator or target message, once the condition has been cleared (these latched conditions can also be reset via the **SETTINGS** ⇨⇩ **INPUT/OUTPUTS** ⇨⇩ **RESETTING** menu). The RS232 port is intended for connection to a computer.

The USER keys are used by the breaker control feature.

Figure 4–18: TYPICAL LED INDICATOR PANEL FOR ENHANCED FACEPLATE

The status indicators in the first column are described below.

- **IN SERVICE**: This LED indicates that control power is applied, all monitored inputs, outputs, and internal systems are OK, and that the device has been programmed.
- **TROUBLE**: This LED indicates that the relay has detected an internal problem.
- **TEST MODE**: This LED indicates that the relay is in test mode. For more information, see the Test Mode section in the Settings chapter.
- **TRIP**: This LED indicates that the FlexLogic operand serving as a trip switch has operated. This indicator always latches; as such, a reset command must be initiated to allow the latch to be reset.
- **ALARM**: This LED indicates that the FlexLogic operand serving as an alarm switch has operated. This indicator is never latched.
- **PICKUP**: This LED indicates that an element is picked up. This indicator is never latched.

The event cause indicators in the first column are described below.

Events cause LEDs are turned on or off by protection elements that have their respective target setting selected as either “Enabled” or “Latched”. If a protection element target setting is “Enabled”, then the corresponding event cause LEDs remain on as long as operate operand associated with the element remains asserted. If a protection element target setting is “Latched”, then the corresponding event cause LEDs turn on when the operate operand associated with the element is asserted and remain on until the RESET button on the front panel is pressed after the operand is reset.

All elements that are able to discriminate faulted phases can independently turn off or on the phase A, B, or C LEDs. This includes phase instantaneous overcurrent, phase undervoltage, etc. This means that the phase A, B, and C operate operands for individual protection elements are ORed to turn on or off the phase A, B, or C LEDs.

- **VOLTAGE**: This LED indicates voltage was involved.
- **CURRENT**: This LED indicates current was involved.
- **FREQUENCY**: This LED indicates frequency was involved.
- **OTHER**: This LED indicates a composite function that is not solely current, voltage, or frequency based (distance or power for example) or a control function (digital element or trip bus for example).
- **PHASE A**: This LED indicates phase A was involved.
- **PHASE B**: This LED indicates phase B was involved.
- **PHASE C**: This LED indicates phase C was involved.
- **NEUTRAL/GROUND**: This LED indicates that neutral or ground was involved.

The user-programmable LEDs consist of 48 amber LED indicators in four columns. The operation of these LEDs is user-defined. Support for applying a customized label beside every LED is provided. Default labels are shipped in the label package of every C70, together with custom templates. The default labels can be replaced by user-printed labels.

User customization of LED operation is of maximum benefit in installations where languages other than English are used to communicate with operators. Refer to the User-Programmable LEDs section in chapter 5 for the settings used to program the operation of the LEDs on these panels.

b) BASIC FACEPLATE

The basic faceplate consists of three panels with LED indicators, keys, and a communications port. The RESET key is used to reset any latched LED indicator or target message, once the condition has been cleared (these latched conditions can also be reset via the **SETTINGS** ⇨⇩ **INPUT/OUTPUTS** ⇨⇩ **RESETTING** menu). The RS232 port is for connection to a computer.

The **USER** keys are used by the breaker control feature.

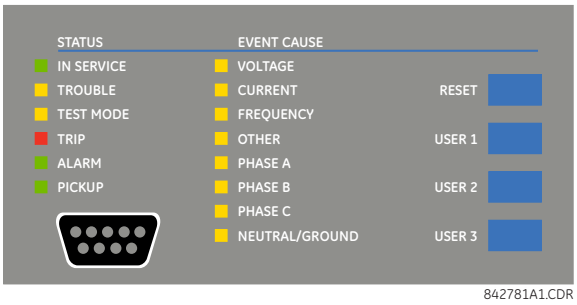

Figure 4–19: LED PANEL 1

STATUS INDICATORS:

- **IN SERVICE**: Indicates that control power is applied; all monitored inputs/outputs and internal systems are OK; the relay has been programmed.
- **TROUBLE**: Indicates that the relay has detected an internal problem.
- **TEST MODE**: Indicates that the relay is in test mode. For more information, see the Test Mode section in the Settings chapter.
- **TRIP**: Indicates that the selected FlexLogic operand serving as a Trip switch has operated. This indicator always latches; the reset command must be initiated to allow the latch to be reset.
- **ALARM**: Indicates that the selected FlexLogic operand serving as an Alarm switch has operated. This indicator is never latched.
- **PICKUP**: Indicates that an element is picked up. This indicator is never latched.

EVENT CAUSE INDICATORS:

Events cause LEDs are turned on or off by protection elements that have their respective target setting selected as either “Enabled” or “Latched”. If a protection element target setting is “Enabled”, then the corresponding event cause LEDs remain on as long as operate operand associated with the element remains asserted. If a protection element target setting is “Latched”, then the corresponding event cause LEDs turn on when the operate operand associated with the element is asserted and remain on until the RESET button on the front panel is pressed after the operand is reset.

All elements that are able to discriminate faulted phases can independently turn off or on the phase A, B, or C LEDs. This includes phase instantaneous overcurrent, phase undervoltage, etc. This means that the phase A, B, and C operate operands for individual protection elements are ORed to turn on or off the phase A, B, or C LEDs.

- **VOLTAGE**: Indicates voltage was involved.
- **CURRENT**: Indicates current was involved.
- **FREQUENCY**: Indicates frequency was involved.
- **OTHER**: Indicates a composite function that is not solely current, voltage, or frequency based (distance or power for example) or a control function (digital element or trip bus for example).
- **PHASE A**: Indicates phase A was involved.
- **PHASE B**: Indicates phase B was involved.
- **PHASE C**: Indicates phase C was involved.
- **NEUTRAL/GROUND**: Indicates that neutral or ground was involved.

USER-PROGRAMMABLE INDICATORS:

The second and third provide 48 amber LED indicators whose operation is controlled by the user. Support for applying a customized label beside every LED is provided.

User customization of LED operation is of maximum benefit in installations where languages other than English are used to communicate with operators. Refer to the User-Programmable LEDs section in chapter 5 for the settings used to program the operation of the LEDs on these panels.

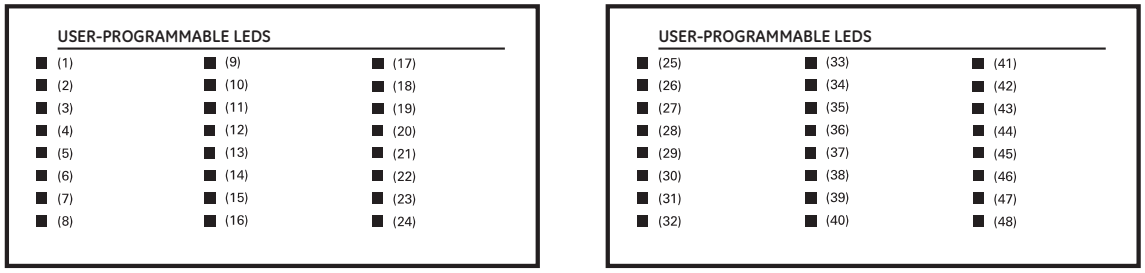

842782A1.CDR

Figure 4–20: LED PANELS 2 AND 3 (INDEX TEMPLATE)

DEFAULT LABELS FOR LED PANEL 2:

The default labels are intended to represent:

- **GROUP 1...6**: The illuminated GROUP is the active settings group.

The relay is shipped with the default label for the LED panel 2. The LEDs, however, are not pre-programmed. To match the pre-printed label, the LED settings must be entered as shown in the User-Programmable LEDs section of chapter 5. The LEDs are fully user-programmable. The default labels can be replaced by user-printed labels for both panels as explained in the following section.

842783A1.CDR

Figure 4–21: LED PANEL 2 (DEFAULT LABELS)

4.3.3 CUSTOM LABELING OF LEDS

a) ENHANCED FACEPLATE

The following procedure requires these pre-requisites:

- EnerVista UR Setup software is installed and operational
- The C70 settings have been saved to a settings file
- The C70 front panel label cutout sheet (GE Multilin part number 1006-0047) has been downloaded from http://www.gegridsolutions.com/products/support/ur/URLEDenhanced.doc and printed
- Small-bladed knife

To create custom LED labels for the enhanced front panel display:

1. Start the EnerVista UR Setup software.

2. Select the **Front Panel Report** item at the bottom of the menu tree for the settings file. The front panel report window displays.

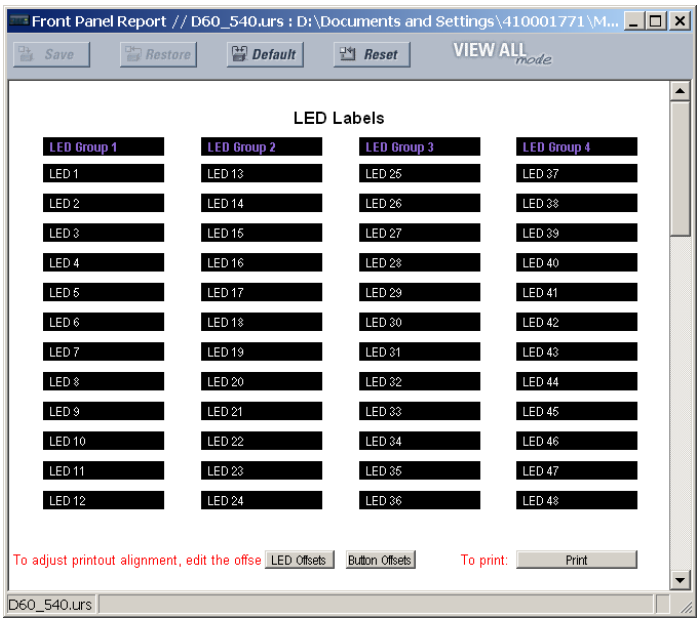

Figure 4–22: FRONT PANEL REPORT WINDOW

3. Enter the text to appear next to each LED and above each user-programmable pushbuttons in the fields provided.
4. Feed the C70 front panel label cutout sheet into a printer and press the **Print** button in the front panel report window.
5. When printing is complete, fold the sheet along the perforated lines and punch out the labels.
6. Remove the C70 label insert tool from the package and bend the tabs as described in the following procedures. These tabs are used for removal of the default and custom LED labels.

NOTE

It is important that the tool be used EXACTLY as shown below, with the printed side containing the GE part number facing the user.

The label package shipped with every C70 contains the three default labels shown below, the custom label template sheet, and the label removal tool.

If the default labels are suitable for your application, insert them in the appropriate slots and program the LEDs to match them. If you require custom labels, follow the procedures below to remove the original labels and insert the new ones.

The following procedure describes how to setup and use the label removal tool.

1. Bend the tabs at the left end of the tool upwards as shown below.

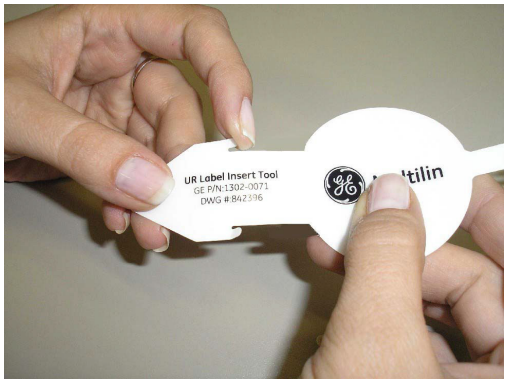

2. Bend the tab at the center of the tool tail as shown below.

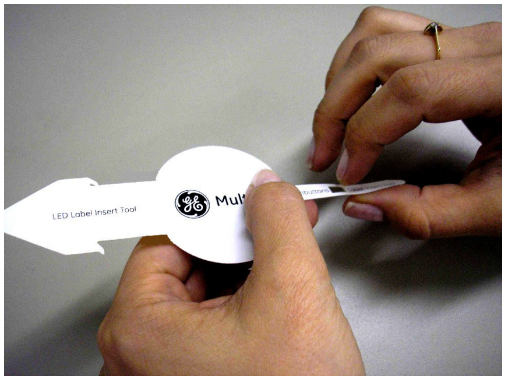

The following procedure describes how to remove the LED labels from the C70 enhanced front panel and insert the custom labels.

1. Use the knife to lift the LED label and slide the label tool underneath. Make sure the bent tabs are pointing away from the relay.

2. Slide the label tool under the LED label until the tabs snap out as shown below. This attaches the label tool to the LED label.

3. Remove the tool and attached LED label as shown below.

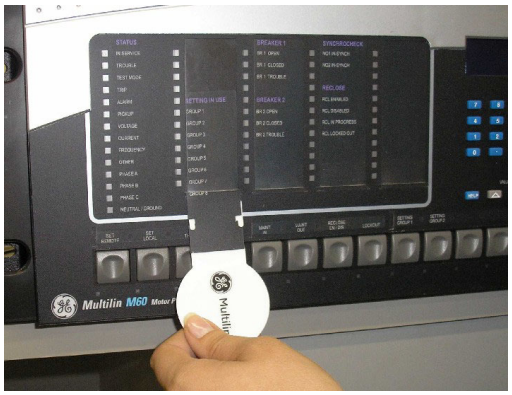

4. Slide the new LED label inside the pocket until the text is properly aligned with the LEDs, as shown below.

The following procedure describes how to remove the user-programmable pushbutton labels from the C70 enhanced front panel and insert the custom labels.

1. Use the knife to lift the pushbutton label and slide the tail of the label tool underneath, as shown below. Make sure the bent tab is pointing away from the relay.

2. Slide the label tool under the user-programmable pushbutton label until the tabs snap out as shown below. This attaches the label tool to the user-programmable pushbutton label.

3. Remove the tool and attached user-programmable pushbutton label as shown below.

4. Slide the new user-programmable pushbutton label inside the pocket until the text is properly aligned with the buttons, as shown below.

4.3.4 DISPLAY

All messages are displayed on a backlit liquid crystal display (LCD) to make them visible under poor lighting conditions. While the keypad and display are not actively being used, the display defaults to user-defined messages. Any high-priority event-driven message automatically overrides the default message and appears on the display.

Settings files conversion from previous firmware versions is supported.

4.3.5 KEYPAD

Display messages are organized into pages under the following headings: actual values, settings, commands, and targets. The MENU key navigates through these pages. Each heading page is divided further into logical subgroups.

The MESSAGE keys navigate through the subgroups. The VALUE keys increment or decrement numerical setting values when in programming mode. These keys also scroll through alphanumeric values in the text edit mode. Alternatively, values can be entered with the numeric keypad.

The decimal key initiates and advances to the next character in text edit mode or enters a decimal point.

The HELP key can be pressed at any time for context-sensitive help messages.

The ENTER key stores altered setting values.

When entering an IP address on the front panel, key in the first sequence of the number, then press the • key for the decimal place. For example, for 127.0.0.1, press 127, then •, then 0, then •, then 0, then •, then 1. To save the address, press the ENTER key.

4.3.6 BREAKER CONTROL

a) INTRODUCTION

The C70 can interface with associated circuit breakers. In many cases the application monitors the state of the breaker, that can be presented on faceplate LEDs, along with a breaker trouble indication. Breaker operations can be manually initiated from faceplate keypad or automatically initiated from a FlexLogic operand. A setting is provided to assign names to each breaker; this user-assigned name is used for the display of related flash messages. These features are provided for two breakers; the user can use only those portions of the design relevant to a single breaker, which must be breaker 1.

For the following discussion it is assumed the **SETTINGS ⇨⇩ SYSTEM SETUP ⇨⇩ BREAKERS ⇨ BREAKER 1(2) ⇨ BREAKER FUNCTION** setting is "Enabled" for each breaker.

b) CONTROL MODE SELECTION AND MONITORING

Installations can require that a breaker is operated in the three-pole only mode (3-pole), or in the one and three-pole (1-pole) mode, selected by setting. If the mode is selected as three-pole, a single input tracks the breaker open or closed position. If the mode is selected as one-pole, all three breaker pole states must be input to the relay. These inputs must be in agreement to indicate the position of the breaker.

For the following discussion it is assumed the **SETTINGS** ⇨⇩ **SYSTEM SETUP** ⇨⇩ **BREAKERS** ⇨ **BREAKER 1(2)** ⇨⇩ **BREAKER 1(2) PUSH BUTTON CONTROL** setting is "Enabled" for each breaker.

c) FACEPLATE (USER KEY) CONTROL

After the 30 minute interval during which command functions are permitted after a correct command password, the user cannot open or close a breaker via the keypad. The following discussions begin from the not-permitted state.

d) CONTROL OF TWO BREAKERS

For the following example setup, the `(Name)` field represents the user-programmed variable name.

For this application (setup shown below), the relay is connected and programmed for both breaker 1 and breaker 2. The USER 1 key performs the selection of which breaker is to be operated by the USER 2 and USER 3 keys. The USER 2 key is used to manually close the breaker and the USER 3 key is used to manually open the breaker.

`ENTER COMMAND PASSWORD`	This message appears when the USER 1, USER 2, or USER 3 key is pressed and a **COMMAND PASSWORD** is required; i.e. if **COMMAND PASSWORD** is enabled and no commands have been issued within the last 30 minutes.
`Press USER 1 To Select Breaker`	This message appears if the correct password is entered or if none is required. This message displays for 30 seconds or until the USER 1 key is pressed again.
`BKR1-(Name) SELECTED USER 2=CLS/USER 3=OP`	This message is displayed after the USER 1 key is pressed for the second time. Three possible actions can be performed from this state within 30 seconds as per items **(1)**, **(2)** and **(3)** below:
(1)	
`USER 2 OFF/ON To Close BKR1-(Name)`	If the USER 2 key is pressed, this message appears for 20 seconds. If the USER 2 key is pressed again within that time, a signal is created that can be programmed to operate an output relay to close breaker 1.
(2)	
`USER 3 OFF/ON To Open BKR1-(Name)`	If the USER 3 key is pressed, this message appears for 20 seconds. If the USER 3 key is pressed again within that time, a signal is created that can be programmed to operate an output relay to open breaker 1.
(3)	
`BKR2-(Name) SELECTED USER 2=CLS/USER 3=OP`	If the USER 1 key is pressed at this step, this message appears showing that a different breaker is selected. Three possible actions can be performed from this state as per **(1)**, **(2)** and **(3)**. Repeatedly pressing the USER 1 key alternates between available breakers. Pressing keys other than USER 1, 2, or 3 at any time aborts the breaker control function.

e) CONTROL OF ONE BREAKER

For this application the relay is connected and programmed for breaker 1 only. Operation for this application is identical to that described above for two breakers.

4.3.7 MENUS

a) NAVIGATION

Press the MENU key to select a header display page (top-level menu). The header title appears momentarily followed by a header display page menu item. Each press of the MENU key advances through the following main heading pages:

- Actual values
- Settings

- Commands
- Targets
- User displays (when enabled)

b) HIERARCHY

The setting and actual value messages are arranged hierarchically. The header display pages are indicated by double scroll bar characters (■■), while sub-header pages are indicated by single scroll bar characters (■). The header display pages represent the highest level of the hierarchy and the sub-header display pages fall below this level. The MESSAGE UP and DOWN keys move within a group of headers, sub-headers, setting values, or actual values. Continually pressing the MESSAGE RIGHT key from a header display displays specific information for the header category. Conversely, continually pressing the MESSAGE LEFT key from a setting value or actual value display returns to the header display.

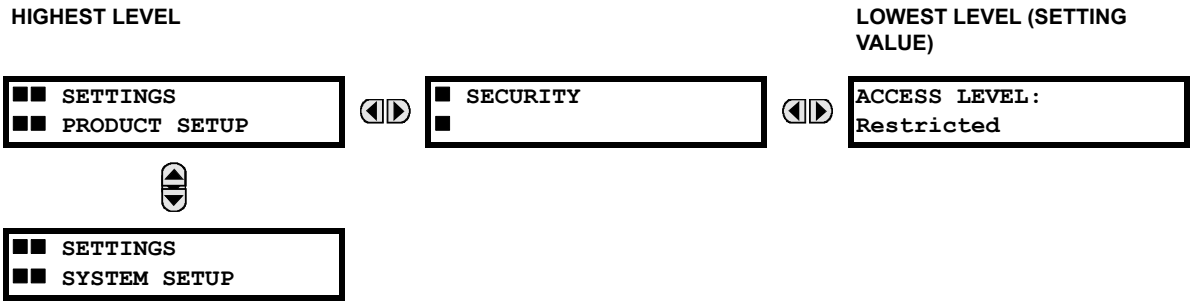

c) EXAMPLE MENU NAVIGATION

■■ ACTUAL VALUES ■■ STATUS	Press the MENU key until the header for the first Actual Values page appears. This page contains system and relay status information. Repeatedly press the MESSAGE keys to display the other actual value headers.
⇩	
■■ SETTINGS ■■ PRODUCT SETUP	Press the MENU key until the header for the first page of Settings appears. This page contains settings to configure the relay.
⇩	
■■ SETTINGS ■■ SYSTEM SETUP	Press the MESSAGE DOWN key to move to the next Settings page. This page contains settings for System Setup. Repeatedly press the MESSAGE UP and DOWN keys to display the other setting headers and then back to the first Settings page header.
⇩	
■ SECURITY ■	From the Settings page one header (Product Setup), press the MESSAGE RIGHT key once to display the first sub-header (Security).
⇩	
ACCESS LEVEL: Restricted	Press the MESSAGE RIGHT key once more and this will display the first setting for Security. Pressing the MESSAGE DOWN key repeatedly will display the remaining setting messages for this sub-header.
⇩	
■ SECURITY ■	Press the MESSAGE LEFT key once to move back to the first sub-header message.
⇩	
■ DISPLAY ■ PROPERTIES	Pressing the MESSAGE DOWN key displays the second setting sub-header associated with the Product Setup header.
⇩	
FLASH MESSAGE TIME: 1.0 s	Press the MESSAGE RIGHT key once more to display the first setting for Display Properties.

a) ENTERING NUMERICAL DATA

Each numerical setting has its own minimum, maximum, and increment value associated with it. These parameters define what values are acceptable for a setting.

```
FLASH MESSAGE
TIME:  1.0 s
```

⇩

For example, select the **SETTINGS** ⇨ **PRODUCT SETUP** ⇨⇩ **DISPLAY PROPERTIES** ⇨ **FLASH MESSAGE TIME** setting.

```
MINIMUM:   0.5
MAXIMUM:  10.0
```

Press the HELP key to view the minimum and maximum values. Press the HELP key again to view the next context sensitive help message.

Two methods of editing and storing a numerical setting value are available.

- **0 to 9 and decimal point**: The relay numeric keypad works the same as that of any electronic calculator. A number is entered one digit at a time. The leftmost digit is entered first and the rightmost digit is entered last. Pressing the MESSAGE LEFT key or pressing the ESCAPE key, returns the original value to the display.
- **VALUE keys**: The VALUE UP key increments the displayed value by the step value, up to the maximum value allowed. While at the maximum value, pressing the VALUE UP key again allows the setting selection to continue upward from the minimum value. The VALUE DOWN key decrements the displayed value by the step value, down to the minimum value. While at the minimum value, pressing the VALUE DOWN key again allows the setting selection to continue downward from the maximum value.


```
FLASH MESSAGE
TIME:  2.5 s
```

⇩

As an example, set the flash message time setting to 2.5 seconds. Press the appropriate numeric keys in the sequence “2 . 5". The display message changes as the digits are being entered.

```
NEW SETTING
HAS BEEN STORED
```

Until ENTER is pressed, editing changes are not registered by the relay. Therefore, press ENTER to store the new value in memory. This flash message momentarily appears as confirmation of the storing process. Numerical values which contain decimal places are rounded-off if more decimal place digits are entered than specified by the step value.

b) ENTERING ENUMERATION DATA

Enumeration settings have data values which are part of a set, whose members are explicitly defined by a name. A set is comprised of two or more members.

```
ACCESS LEVEL:
Restricted
```

For example, the selections available for **ACCESS LEVEL** are "Restricted", "Command", "Setting", and "Factory Service".

Enumeration type values are changed using the VALUE keys. The VALUE UP key displays the next selection while the VALUE DOWN key displays the previous selection.

```
ACCESS LEVEL:
Setting
```

⇩

If the **ACCESS LEVEL** needs to be "Setting", press the VALUE keys until the proper selection is displayed. Press HELP at any time for the context sensitive help messages.

```
NEW SETTING
HAS BEEN STORED
```

Changes are not registered by the relay until the ENTER key is pressed. Pressing ENTER stores the new value in memory. This flash message momentarily appears as confirmation of the storing process.

c) ENTERING ALPHANUMERIC TEXT

Text settings have data values which are fixed in length, but user-defined in character. They can be upper case letters, lower case letters, numerals, and a selection of special characters.

There are several places where text messages can be programmed to allow the relay to be customized for specific applications. One example is the Message Scratchpad. Use the following procedure to enter alphanumeric text messages.

For example: to enter the text, “Breaker #1”.

1. Press the decimal point to enter text edit mode.
2. Press the VALUE keys until the character 'B' appears; press the decimal key to advance the cursor to the next position.
3. Repeat step 2 for the remaining characters: r,e,a,k,e,r, ,#,1.
4. Press ENTER to store the text.
5. If you have any problem, press HELP to view context sensitive help. Flash messages appear sequentially for several seconds each. For the case of a text setting message, pressing HELP displays how to edit and store new values.

d) ACTIVATING THE RELAY

```
RELAY SETTINGS:
Not Programmed
```

When the relay is powered up, the Trouble LED is on, the In Service LED off, and this message displayed, indicating the relay is in the "Not Programmed" state and is safeguarding (output relays blocked) against the installation of a relay whose settings have not been entered. This message remains until the relay is explicitly put in the "Programmed" state.

To change the **RELAY SETTINGS**: "Not Programmed" mode to "Programmed", proceed as follows:

1. Press the MENU key until the **SETTINGS** header flashes momentarily and the **PRODUCT SETUP** message appears on the display.
2. Press the MESSAGE RIGHT key until the **SECURITY** message appears on the display.
3. Press the MESSAGE DOWN key until the **INSTALLATION** message appears on the display.
4. Press the MESSAGE RIGHT key until the **RELAY SETTINGS: Not Programmed** message is displayed.

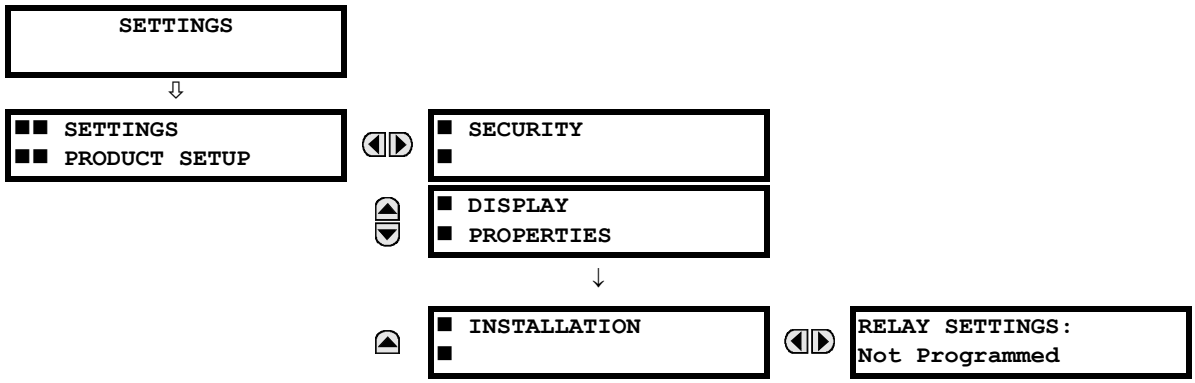

5. After the **RELAY SETTINGS: Not Programmed** message appears on the display, press the VALUE keys change the selection to "Programmed".
6. Press the ENTER key.

```
RELAY SETTINGS:
Not Programmed
```

```
RELAY SETTINGS:
Programmed
```

```
NEW SETTING
HAS BEEN STORED
```

7. When the "NEW SETTING HAS BEEN STORED" message appears, the relay is in "Programmed" state and the In Service LED turns on.

e) ENTERING INITIAL PASSWORDS

The information in this section refers to password security. For information on how to set or change CyberSentry passwords, see the Settings > Product Setup > Security > CyberSentry section in the next chapter.

The C70 supports password entry from a local or remote connection.

Local access is defined as any access to settings or commands via the faceplate interface. This includes both keypad entry and the faceplate RS232 connection. Remote access is defined as any access to settings or commands via any rear communications port. This includes both Ethernet and RS485 connections. Any changes to the local or remote passwords enables this functionality.

To enter the initial setting (or command) password, proceed as follows:

1. Press the MENU key until the **SETTINGS** header flashes momentarily and the **PRODUCT SETUP** message appears on the display.
2. Press the MESSAGE RIGHT key until the **ACCESS LEVEL** message appears on the display.
3. Press the MESSAGE DOWN key until the **CHANGE LOCAL PASSWORDS** message appears on the display.
4. Press the MESSAGE RIGHT key until the **CHANGE SETTING PASSWORD** or **CHANGE COMMAND PASSWORD** message appears on the display.

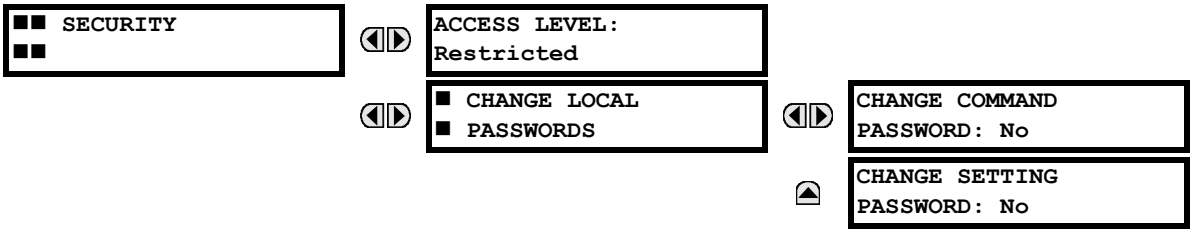

5. After the **CHANGE...PASSWORD** message appears on the display, press the VALUE UP or DOWN key to change the selection to "Yes".
6. Press the ENTER key and the display prompts you to **ENTER NEW PASSWORD**.
7. Type in a password and press the ENTER key.
8. When the **VERIFY NEW PASSWORD** is displayed, re-type in the same password and press ENTER.

9. When the **NEW PASSWORD HAS BEEN STORED** message appears, your new Setting (or Command) Password will be active.

f) CHANGING EXISTING PASSWORD

To change an existing password, follow the instructions in the previous section with the following exception. A message prompts you to type in the existing password (for each security level) before a new password can be entered.

g) INVALID PASSWORD ENTRY

By default, when an incorrect Command or Setting password has been entered via the faceplate interface three times within three minutes, the LOCAL ACCESS DENIED FlexLogic operand is set to "On" and the C70 does not allow settings or command level access via the faceplate interface for the next five minutes.

By default, when an incorrect Command or Setting password has been entered via any external communications interface three times within three minutes, the REMOTE ACCESS DENIED FlexLogic operand is set to "On" and the C70 does not allow settings or command access via the any external communications interface for five minutes. The REMOTE ACCESS DENIED FlexLogic operand is set to "Off" after five minutes for a Command password or 30 minutes for a Settings password.

These default settings can be changed in EnerVista under **Settings > Product Setup > Security**.

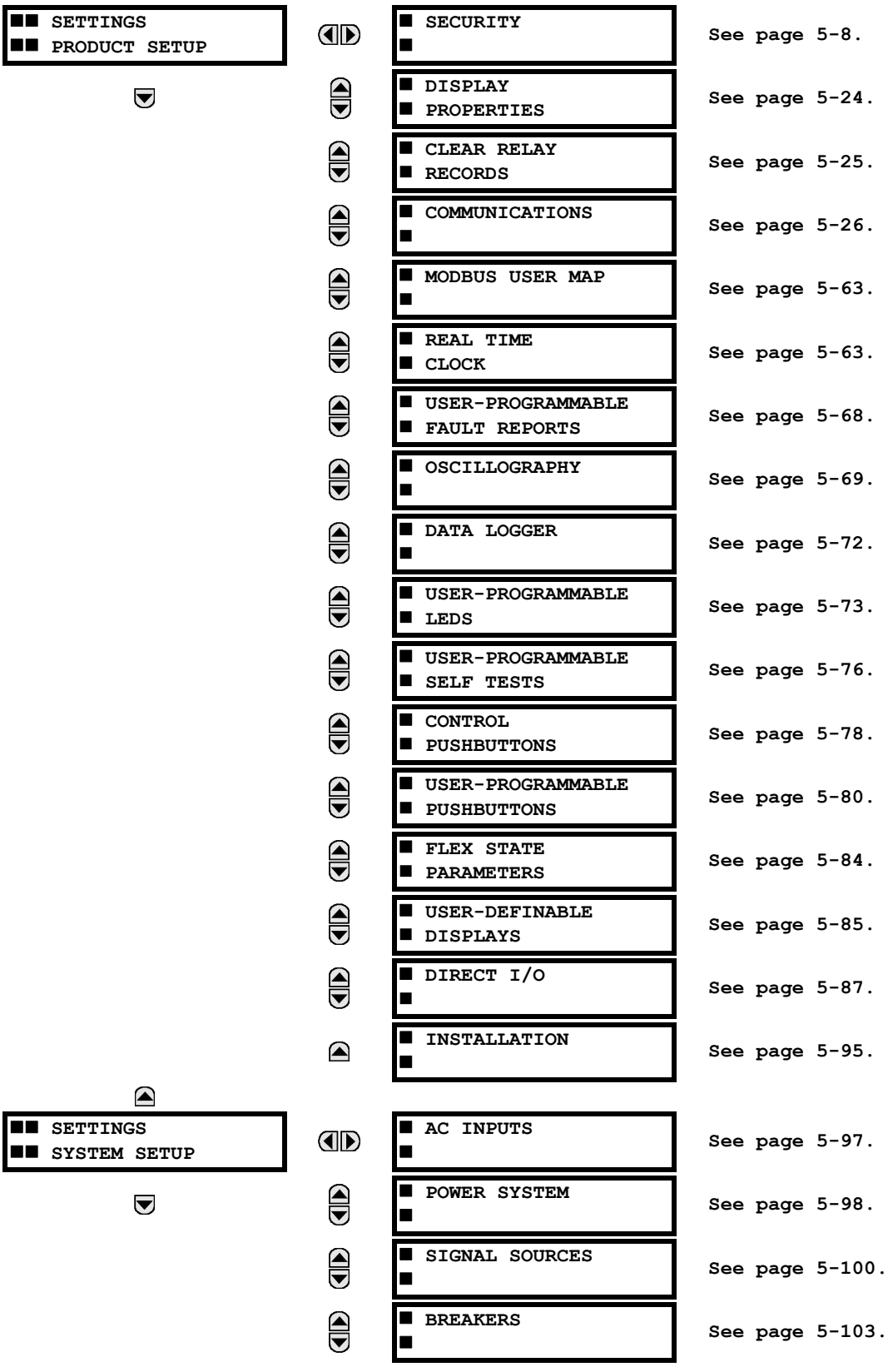
SETTINGS
PRODUCT SETUP
SECURITY
See page 5-8.
DISPLAY PROPERTIES
See page 5-24.
CLEAR RELAY RECORDS
See page 5-25.
COMMUNICATIONS
See page 5-26.
MODBUS USER MAP
See page 5-63.
REAL TIME CLOCK
See page 5-63.
USER-PROGRAMMABLE FAULT REPORTS
See page 5-68.
OSCILLOGRAPHY
See page 5-69.
DATA LOGGER
See page 5-72.
USER-PROGRAMMABLE LEDS
See page 5-73.
USER-PROGRAMMABLE SELF TESTS
See page 5-76.
CONTROL PUSHBUTTONS
See page 5-78.
USER-PROGRAMMABLE PUSHBUTTONS
See page 5-80.
FLEX STATE PARAMETERS
See page 5-84.
USER-DEFINABLE DISPLAYS
See page 5-85.
DIRECT I/O
See page 5-87.
INSTALLATION
See page 5-95.
SETTINGS
SYSTEM SETUP
AC INPUTS
See page 5-97.
POWER SYSTEM
See page 5-98.
SIGNAL SOURCES
See page 5-100.
BREAKERS
See page 5-103.

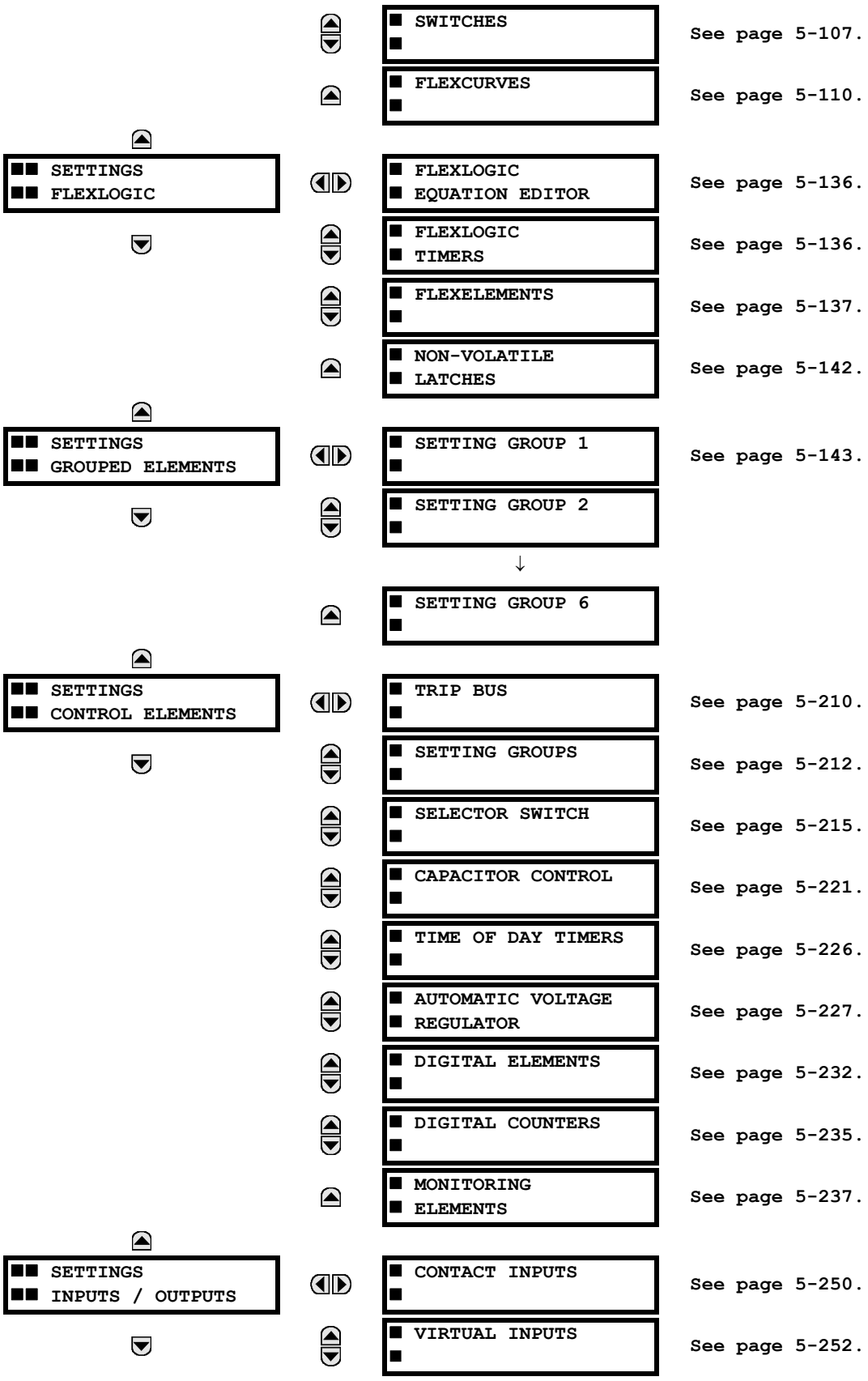
SETTINGS
FLEXLOGIC
SETTINGS
GROUPED ELEMENTS
SETTINGS
CONTROL ELEMENTS
SETTINGS
INPUTS / OUTPUTS
SWITCHES
See page 5-107.
FLEXCURVES
See page 5-110.
FLEXLOGIC
EQUATION EDITOR
See page 5-136.
FLEXLOGIC
TIMERS
See page 5-136.
FLEXELEMENTS
See page 5-137.
NON-VOLATILE
LATCHES
See page 5-142.
SETTING GROUP 1
See page 5-143.
SETTING GROUP 2
SETTING GROUP 6
TRIP BUS
See page 5-210.
SETTING GROUPS
See page 5-212.
SELECTOR SWITCH
See page 5-215.
CAPACITOR CONTROL
See page 5-221.
TIME OF DAY TIMERS
See page 5-226.
AUTOMATIC VOLTAGE
REGULATOR
See page 5-227.
DIGITAL ELEMENTS
See page 5-232.
DIGITAL COUNTERS
See page 5-235.
MONITORING
ELEMENTS
See page 5-237.
CONTACT INPUTS
See page 5-250.
VIRTUAL INPUTS
See page 5-252.

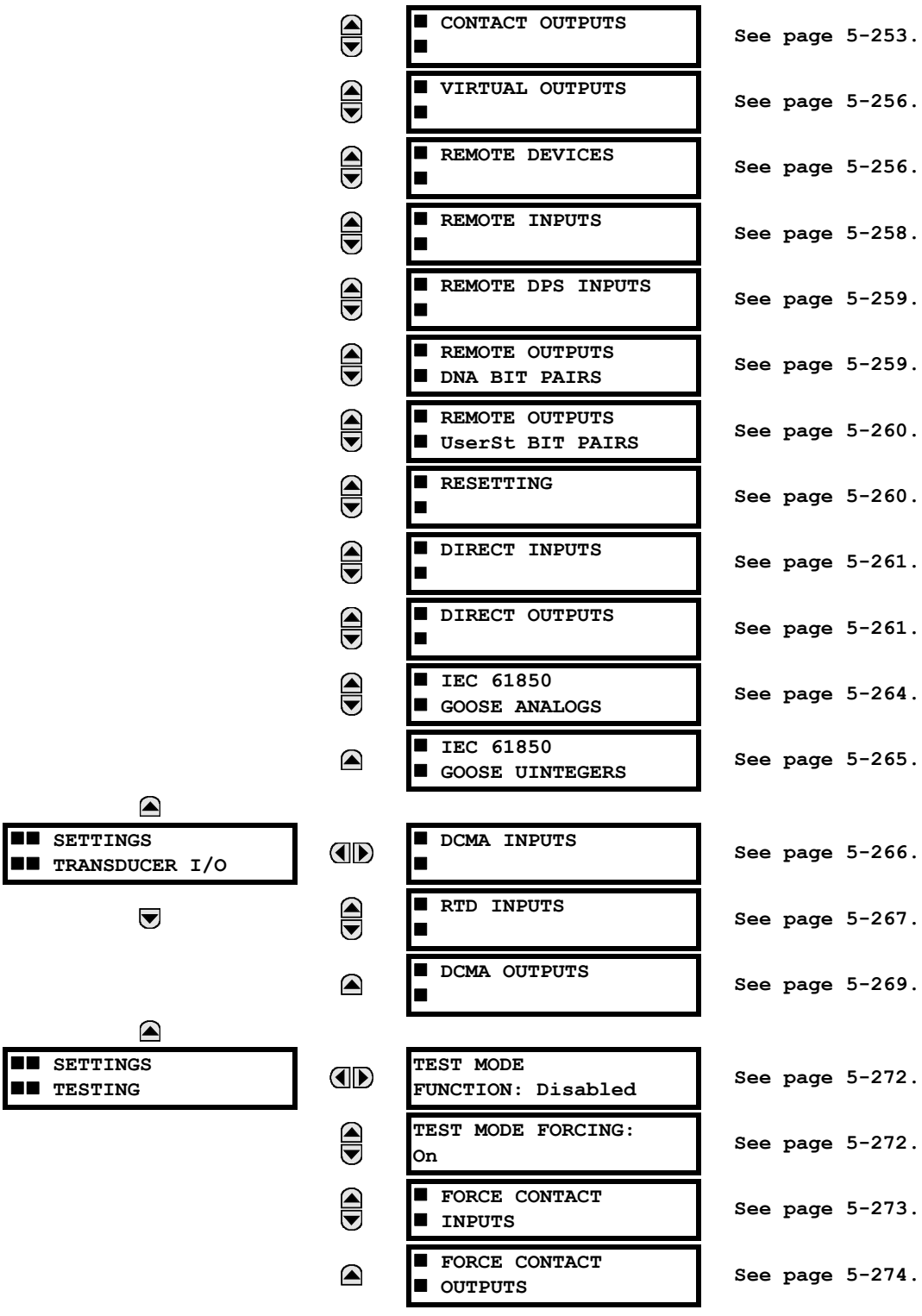
SETTINGS
TRANSDUCER I/O
SETTINGS
TESTING
CONTACT OUTPUTS
See page 5-253.
VIRTUAL OUTPUTS
See page 5-256.
REMOTE DEVICES
See page 5-256.
REMOTE INPUTS
See page 5-258.
REMOTE DPS INPUTS
See page 5-259.
REMOTE OUTPUTS DNA BIT PAIRS
See page 5-259.
REMOTE OUTPUTS UserSt BIT PAIRS
See page 5-260.
RESETTING
See page 5-260.
DIRECT INPUTS
See page 5-261.
DIRECT OUTPUTS
See page 5-261.
IEC 61850 GOOSE ANALOGS
See page 5-264.
IEC 61850 GOOSE UINTEGERS
See page 5-265.
DCMA INPUTS
See page 5-266.
RTD INPUTS
See page 5-267.
DCMA OUTPUTS
See page 5-269.
TEST MODE FUNCTION: Disabled
See page 5-272.
TEST MODE FORCING: On
See page 5-272.
FORCE CONTACT INPUTS
See page 5-273.
FORCE CONTACT OUTPUTS
See page 5-274.

5.1.2 INTRODUCTION TO ELEMENTS

In the design of UR relays, the term *element* is used to describe a feature that is based around a comparator. The comparator is provided with an input (or set of inputs) that is tested against a programmed setting (or group of settings) to determine if the input is within the defined range that will set the output to logic 1, also referred to as *setting the flag*. A single comparator may make multiple tests and provide multiple outputs; for example, the time overcurrent comparator sets a pickup flag when the current input is above the setting and sets an operate flag when the input current has been at a level above the pickup setting for the time specified by the time-current curve settings. All comparators use analog actual values as the input.

NOTE

An exception to this rule is digital elements, which use logic states as inputs.

Elements are arranged into two classes, *grouped* and *control*. Each element classed as a grouped element is provided with six alternate sets of settings, in setting groups numbered 1 through 6. The performance of a grouped element is defined by the setting group that is active at a given time. The performance of a control element is independent of the selected active setting group.

The main characteristics of an element are shown on the element logic diagram. This includes the inputs, settings, fixed logic, and the output operands generated (abbreviations used on scheme logic diagrams are defined in Appendix F).

Some settings are specified in per-unit (pu) calculated quantities:

pu quantity = (actual quantity) / (base quantity)

Where the current source is from a single CT, the *base quantity* is the nominal secondary or primary current of the CT. Use the secondary current base to convert per-unit current settings to/from a secondary current value, and use the primary current base to convert to/from a primary current value.

Where the current source is the sum of two or more CTs with different nominal primary current, the primary base quantity is the largest nominal primary current. For example, if CT1 = 300 / 5 A and CT2 = 100 / 1 A, then in order to sum these, CT2 is scaled to the CT1 ratio. In this case, the base quantity is 300 A primary, 5 A secondary for CT1, and 300/(100/1) = 3 A secondary for CT2.

For voltage elements the primary base quantity is the nominal phase-to-phase primary voltage of the protected system provided that the VT ratio setting is set to the nominal ratio of the VTs and the secondary voltage setting is set to the phase-to-phase voltage seen by the relay when the voltage of the protected system in nominal. The UR uses the convention that nominal voltages in a three-phase system are phase-to-phase voltages.

For example, on a system with a 13.8 kV nominal primary voltage, the base quantity is 13800 V. With 14400:120 V delta-connected VTs, the secondary base quantity and secondary voltage setting is:

$$\frac{13800}{14400} \times 120 = 115 \text{ V} \quad \textbf{(EQ 5.1)}$$

For wye-connected VTs, the primary and secondary bases quanitities are as before, but the secondary voltage (here a phase-to-phase ground value) is:

$$\frac{13800}{14400} \times \frac{120}{\sqrt{3}} = 66.4 \text{ V} \quad \textbf{(EQ 5.2)}$$

Many settings are common to most elements and are discussed below:

- **FUNCTION setting:** This setting programs the element to be operational when selected as “Enabled”. The factory default is “Disabled”. Once programmed to “Enabled”, any element associated with the function becomes active and all options become available.
- **NAME setting:** This setting is used to uniquely identify the element.
- **SOURCE setting:** This setting is used to select the AC source to be monitored. See the Introduction to AC Sources section later.
- **PICKUP setting:** For simple elements, this setting is used to program the level of the measured parameter above or below which the pickup state is established. In more complex elements, a set of settings may be provided to define the range of the measured parameters which will cause the element to pickup.

- **PICKUP DELAY setting:** This setting sets a time-delay-on-pickup, or on-delay, for the duration between the pickup and operate output states.
- **RESET DELAY setting:** This setting is used to set a time-delay-on-dropout, or off-delay, for the duration between the Operate output state and the return to logic 0 after the input transits outside the defined pickup range.
- **BLOCK setting:** The default output operand state of all comparators is a logic 0 or “flag not set”. The comparator remains in this default state until a logic 1 is asserted at the RUN input, allowing the test to be performed. If the RUN input changes to logic 0 at any time, the comparator returns to the default state. The RUN input is used to supervise the comparator. The BLOCK input is used as one of the inputs to RUN control.
- **TARGET setting:** This setting is used to define the operation of an element target message. When set to **“**Disabled**”**, no target message or illumination of a faceplate LED indicator is issued upon operation of the element. When set to “Self-Reset”, the target message and LED indication follow the operate state of the element, and self-resets once the operate element condition clears. When set to “Latched”, the target message and LED indication will remain visible after the element output returns to logic 0 until a RESET command is received by the relay.
- **EVENTS setting:** This setting is used to control whether the pickup, dropout or operate states are recorded by the event recorder. When set to “Disabled”, element pickup, dropout or operate are not recorded as events. When set to “Enabled”, events are created for:

  (Element) PKP (pickup)
  (Element) DPO (dropout)
  (Element) OP (operate)

  The DPO event is created when the measure and decide comparator output transits from the pickup state (logic 1) to the dropout state (logic 0). This could happen when the element is in the operate state if the reset delay time is not 0.

  Not every operand of a given element in a UR relay generates events, only the major output operands. Elements, asserting output per phase, log operating phase output only, without asserting the common three-phase operand event.

5.1.3 INTRODUCTION TO AC SOURCES

a) BACKGROUND

A mechanism called a *source* configures the routing of CT and VT input channels to measurement sub-systems. Sources, in the context of UR series relays, refer to the logical grouping of current and voltage signals such that one source contains all the signals required to measure the load or fault in a particular power apparatus. A given source may contain all or some of the following signals: three-phase currents, single-phase ground current, three-phase voltages and an auxiliary voltage from a single VT for checking for synchronism.

The basic idea of an AC source is to select a point on the power system where the voltages and currents are of interest. To illustrate the concept of sources, as applied to current inputs only, consider the breaker-and-a-half scheme below. (The breaker-and-a-half scheme is used for illustrative purposes and is available on select UR products.) In this application, the current flows as shown by the arrows. Some current flows through the upper bus bar to some other location or power equipment, and some current flows into transformer winding 1. The current into winding 1 is the phasor sum (or difference) of the currents in CT1 and CT2 (whether the sum or difference is used depends on the relative polarity of the CT connections). The same considerations apply to transformer winding 2. The protection elements require access to the net current for transformer protection, but some elements may need access to the individual currents from CT1 and CT2.

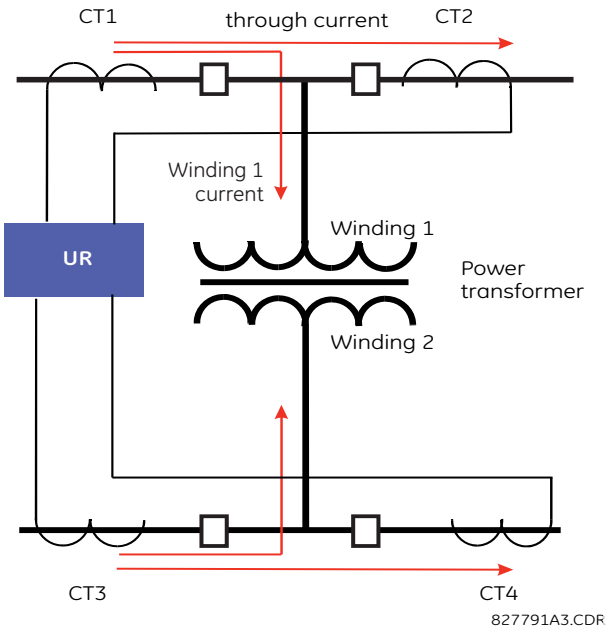

Figure 5–1: BREAKER-AND-A-HALF SCHEME

In conventional analog or electronic relays, the sum of the currents is obtained from an appropriate external connection of all CTs through which any portion of the current for the element being protected could flow. Auxiliary CTs are required to perform ratio matching if the ratios of the primary CTs to be summed are not identical. In the UR series of relays, provisions have been included for all the current signals to be brought to the UR device where grouping, ratio correction and summation are applied internally via configuration settings.

A major advantage of using internal summation is that the individual currents are available to the protection device; for example, as additional information to calculate a restraint current, or to allow the provision of additional protection features that operate on the individual currents such as breaker failure.

Given the flexibility of this approach, it becomes necessary to add configuration settings to the platform to allow the user to select which sets of CT inputs will be added to form the net current into the protected device.

The internal grouping of current and voltage signals forms an AC source. This source can be given a specific name through the settings, and becomes available to protection and metering elements in the UR platform. Individual names can be given to each source to help identify them more clearly for later use. For example, in the scheme shown in the above diagram, the user configures one source to be the sum of CT1 and CT2 and can name this source as “Wdg1 I”.

Once the sources have been configured, the user has them available as selections for the choice of input signal for the protection elements and as metered quantities.

b) CT/VT MODULE CONFIGURATION

CT and VT input channels are contained in CT/VT modules. The type of input channel can be phase/neutral/other voltage, phase/ground current, or sensitive ground current. The CT/VT modules calculate total waveform RMS levels, fundamental frequency phasors, symmetrical components and harmonics for voltage or current, as allowed by the hardware in each channel. These modules may calculate other parameters as directed by the CPU module.

A CT/VT module contains up to eight input channels, numbered 1 through 8. The channel numbering corresponds to the module terminal numbering 1 through 8 and is arranged as follows: Channels 1, 2, 3, and 4 are always provided as a group, hereafter called a “bank,” and all four are either current or voltage, as are channels 5, 6, 7, and 8. Channels 1, 2, 3 and 5, 6, 7 are arranged as phase A, B and C respectively. Channels 4 and 8 are either another current or voltage.

Banks are ordered sequentially from the block of lower-numbered channels to the block of higher-numbered channels, and from the CT/VT module with the lowest slot position letter to the module with the highest slot position letter, as follows:

INCREASING SLOT POSITION LETTER -->		
CT/VT MODULE 1	**CT/VT MODULE 2**	**CT/VT MODULE 3**
< bank 1 >	< bank 3 >	< bank 5 >
< bank 2 >	< bank 4 >	< bank 6 >

The UR platform allows for a maximum of six sets of three-phase voltages and six sets of three-phase currents. The result of these restrictions leads to the maximum number of CT/VT modules in a chassis to three. The maximum number of sources is six. A summary of CT/VT module configurations is shown below.

ITEM	MAXIMUM NUMBER
CT/VT Module	3
CT Bank (3 phase channels, 1 ground channel)	6
VT Bank (3 phase channels, 1 auxiliary channel)	6

c) CT/VT INPUT CHANNEL CONFIGURATION

Upon relay startup, configuration settings for every bank of current or voltage input channels in the relay are automatically generated from the order code. Within each bank, a channel identification label is automatically assigned to each bank of channels in a given product. The *bank* naming convention is based on the physical location of the channels, required by the user to know how to connect the relay to external circuits. Bank identification consists of the letter designation of the slot in which the CT/VT module is mounted as the first character, followed by numbers indicating the channel, either 1 or 5. See the HardFiber instruction manual for designations of HardFiber voltage and current banks.

For three-phase channel sets, the number of the lowest numbered channel identifies the set. For example, F1 represents the three-phase channel set of F1/F2/F3, where F is the slot letter and 1 is the first channel of the set of three channels.

Upon startup, the CPU configures the settings required to characterize the current and voltage inputs, and will display them in the appropriate section in the sequence of the banks (as described above) as follows for a maximum configuration: F1, F5, M1, M5, U1, and U5.

a) SECURITY OVERVIEW

The following security features are available:

- Password security — Basic security present in the default offering of the product
- EnerVista security — Role-based access to various EnerVista software screens and configuration elements. The feature is available in the default offering of the product and only in the EnerVista software.
- CyberSentry security — Advanced security options available as a software option. When purchased, the options are automatically enabled, and the default Password security and EnerVista security are disabled.

Changing the password, or any other setting, does not take the relay out of service. The relay is taken out of service when a settings file is written to it.

LOST PASSWORD

If all passwords are lost, reset the unit to default values. Follow the instructions outlined later for **COMMANDS ⇨⇩ RELAY MAINTENANCE ⇨ SERVICE COMMAND**. Note that the relay is reset to default values, not just the passwords.

Then for CyberSentry, change the default password of ChangeMe1# as outlined in the Set Up CyberSentry and Change Default Password section at the end of the Installation chapter.

PASSWORD REQUIREMENTS

A user account requires an alpha-numeric password that meets the following requirements:

- Password is case-sensitive
- Password cannot contain the user account name or parts of the user account that exceed two consecutive characters
- Password must be 6 to 20 characters in length
- Password must contain characters from three of the following four categories:
  - English uppercase characters (A through Z)
  - English lowercase characters (a through z)
  - Base 10 digits (0 through 9)
  - Non-alphabetic characters (for example, ~, !, @, #, $,%, &)

b) PASSWORD SECURITY

PATH: SETTINGS ⇨ PRODUCT SETUP ⇨ SECURITY

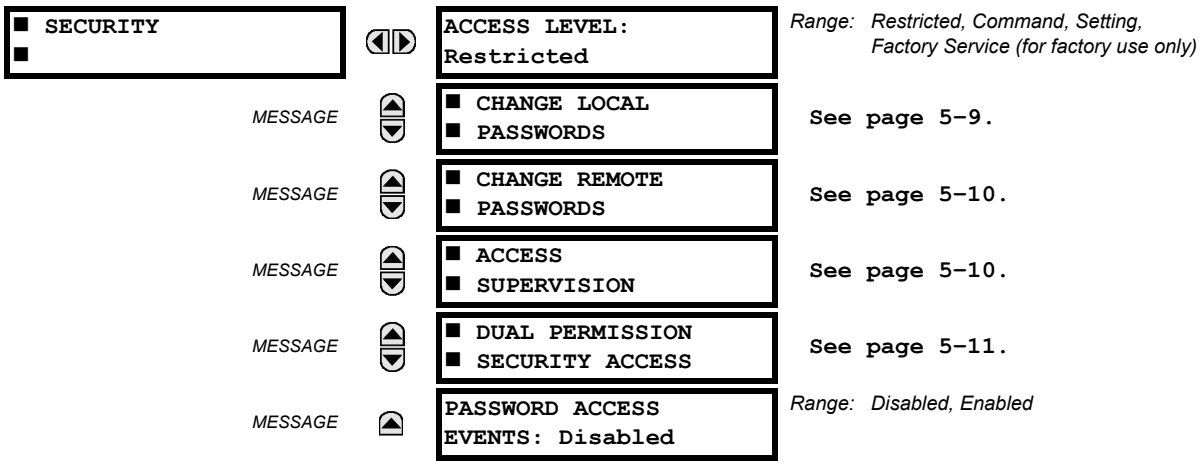

The C70 supports password entry from a local or remote connection.

Local access is defined as any access to settings or commands via the faceplate interface. This includes both keypad entry and the through the faceplate RS232 port. Remote access is defined as any access to settings or commands via any rear communications port. This includes both Ethernet and RS485 connections. Any changes to the local or remote passwords enables this functionality.

When entering a settings or command password via EnerVista or any serial interface, the user must enter the corresponding connection password. If the connection is to the back of the C70, the remote password must be used. If the connection is to the RS232 port of the faceplate, the local password must be used.

NOTE

For a relay without a CyberSentry software option, any user can activate the **RESET** button without password entry.

For the **ACCESS LEVEL**, the "Restricted" option means both settings and commands can be accessed, but there is no access to factory configuration. The "Factory Service" level is not available and intended for factory use only. In addition, there are two user security access levels, setting and command, for which you set a password for each. Use of a password for each level controls whether users can enter commands or change settings. Another option is to specify setting and/or command access for individual user accounts.

The **PASSWORD ACCESS EVENTS** settings allows recording of password access events in the event recorder.

The local setting and command sessions are initiated by the user through the front panel display and are disabled either by the user or by timeout (via the setting and command level access timeout settings). The remote setting and command sessions are initiated by the user through the EnerVista UR Setup software and are disabled either by the user or by timeout.

The state of the session (local or remote, setting or command) determines the state of the following FlexLogic operands.

- ACCESS LOC SETG OFF: Asserted when local setting access is disabled
- ACCESS LOC SETG ON: Asserted when local setting access is enabled
- ACCESS LOC CMND OFF: Asserted when local command access is disabled
- ACCESS LOC CMND ON: Asserted when local command access is enabled
- ACCESS REM SETG OFF: Asserted when remote setting access is disabled
- ACCESS REM SETG ON: Asserted when remote setting access is enabled
- ACCESS REM CMND OFF: Asserted when remote command access is disabled
- ACCESS REM CMND ON: Asserted when remote command access is enabled

NOTE

A command or setting write operation is required to update the state of the remote and local security operands listed.

LOCAL PASSWORDS

PATH: SETTINGS ⇨ PRODUCT SETUP ⇨ SECURITY ⇨⇩ CHANGE LOCAL PASSWORDS

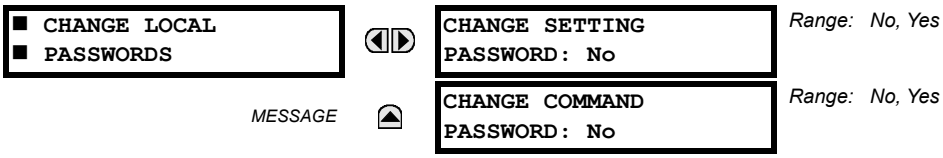

Proper password codes are required to enable each access level. When a **CHANGE COMMAND PASSWORD** or **CHANGE SETTING PASSWORD** setting is programmed to “Yes” via the front panel interface, the following message sequence is invoked:

1. ENTER NEW PASSWORD: _____.
2. VERIFY NEW PASSWORD: _____.
3. NEW PASSWORD HAS BEEN STORED.

To gain write access to a “Restricted” setting, program the **ACCESS LEVEL** setting in the main security menu to “Setting” and then change the setting, or attempt to change the setting and follow the prompt to enter the programmed password. If the password is correctly entered, access is allowed. Access automatically reverts to the “Restricted” level according to the access level timeout setting values.

NOTE

If the setting and command passwords are identical, then this one password allows access to both commands and settings.

If a remote connection is established, local passcodes are not visible.

REMOTE PASSWORDS

PATH: SETTINGS ⇨ PRODUCT SETUP ⇨ SECURITY ⇨⇩ CHANGE REMOTE PASSWORDS

```
■ CHANGE REMOTE
■ PASSWORDS
```

```
CHANGE SETTING
PASSWORD: No
```

Range: No, Yes

MESSAGE

```
CHANGE COMMAND
PASSWORD: No
```

Range: No, Yes

This menu displays when the **ACCESS LEVEL** setting is other than Restricted or Command.

Proper passwords are required to enable each command or setting level access.

To set the command or setting password:

1. In the EnerVista software, navigate to **Settings > Product Setup > Security** menu item to open the remote password settings window.
2. Click the command or setting password **Change** button.
3. Enter the new password in the **New Password** field. Requirements are outlined in the Password Requirements section at the beginning of the chapter. When an original password has already been used, enter it in the **Enter Password** field and click the **Send Password to Device** button.
4. Re-enter the password in the **Confirm Password** field.
5. Click the **OK** button. The password is checked to ensure that is meets requirements.

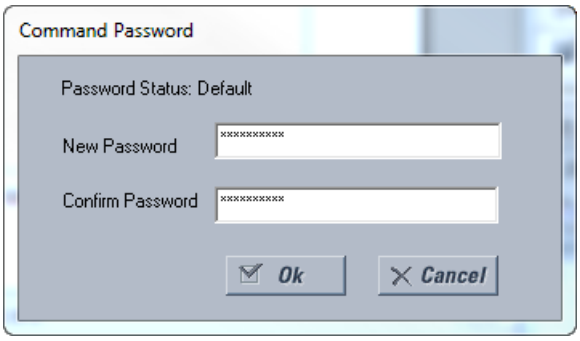

NOTE

If you establish a local connection to the relay (serial), you cannot view remote passcodes.

ACCESS SUPERVISION

PATH: SETTINGS ⇨ PRODUCT SETUP ⇨ SECURITY ⇨⇩ ACCESS SUPERVISION

```
■ ACCESS
■ SUPERVISION
```

```
■ ACCESS LEVEL
■ TIMEOUTS
```

MESSAGE

```
INVALID ATTEMPTS
BEFORE LOCKOUT: 3
```

Range: 2 to 5 in steps of 1

MESSAGE

```
PASSWORD LOCKOUT
DURATION: 5 min
```

Range: 5 to 60 minutes in steps of 1

This menu displays when the **ACCESS LEVEL** setting is other than Restricted or Command.

The following access supervision settings are available.

- **INVALID ATTEMPTS BEFORE LOCKOUT**: This setting specifies the number of times an incorrect password can be entered within a three-minute time span before lockout occurs. When lockout occurs, the LOCAL ACCESS DENIED or

REMOTE ACCESS DENIED FlexLogic operands are set to “On”. These operands are returned to the “Off” state upon expiration of the lockout.

- **PASSWORD LOCKOUT DURATION**: This setting specifies the time that the C70 will lockout password access after the number of invalid password entries specified by the **INVALID ATTEMPTS BEFORE LOCKOUT** setting has occurred.

The C70 provides a means to raise an alarm upon failed password entry. Should password verification fail while accessing a password-protected level of the relay (either settings or commands), the UNAUTHORIZED ACCESS FlexLogic operand is asserted. The operand can be programmed to raise an alarm via contact outputs or communications. This feature can be used to protect against both unauthorized and accidental access attempts.

The UNAUTHORIZED ACCESS operand is reset with the **COMMANDS ⇨⇩ CLEAR RECORDS ⇨⇩ RESET UNAUTHORIZED ALARMS** command. Therefore, to apply this feature with security, the command level should be password-protected. The operand does not generate events or targets.

If events or targets are required, the UNAUTHORIZED ACCESS operand can be assigned to a digital element programmed with event logs or targets enabled.

The access level timeout settings are shown below.

PATH: SETTINGS ⇨ PRODUCT SETUP ⇨ SECURITY ⇨⇩ ACCESS SUPERVISION ⇨ ACCESS LEVEL TIMEOUTS

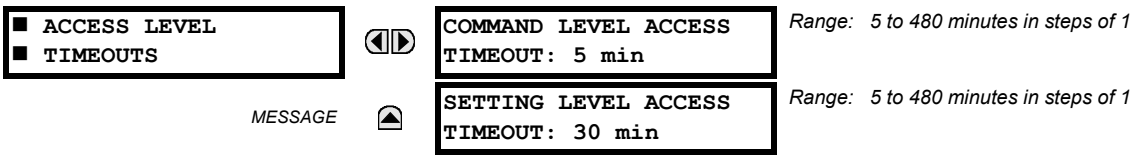

These settings allow the user to specify the length of inactivity required before returning to the restricted access level. Note that the access level will set as restricted if control power is cycled.

- **COMMAND LEVEL ACCESS TIMEOUT**: This setting specifies the length of inactivity (no local or remote access) required to return to restricted access from the command password level.
- **SETTING LEVEL ACCESS TIMEOUT**: This setting specifies the length of inactivity (no local or remote access) required to return to restricted access from the settings password level.

5

DUAL PERMISSION SECURITY ACCESS

PATH: SETTINGS ⇨ PRODUCT SETUP ⇨ SECURITY ⇨⇩ DUAL PERMISSION SECURITY ACCESS

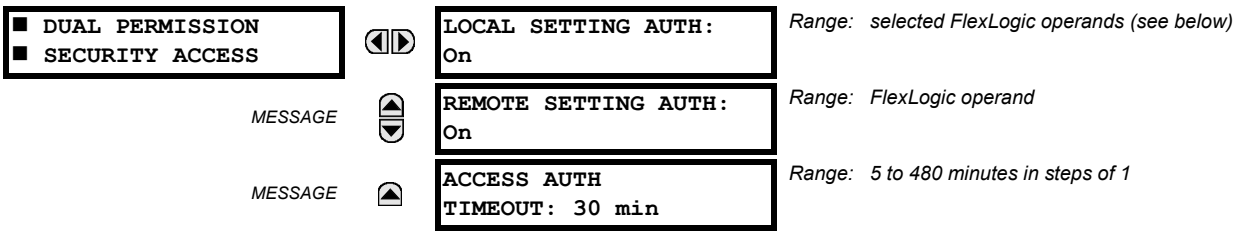

This menu displays when the **ACCESS LEVEL** setting is other than Restricted or Command.

The dual permission security access feature provides a mechanism for customers to prevent unauthorized or unintended upload of settings to a relay through the local or remote interfaces interface.

The following settings are available through the local (front panel) interface only.

- **LOCAL SETTING AUTH**: This setting is used for local (front panel or RS232 interface) setting access supervision. Valid values for the FlexLogic operands are either “On” (default) or any physical “Contact Input ~~ On” value.

  If this setting is “On“, then local setting access functions as normal; that is, a local setting password is required. If this setting is any contact input on FlexLogic operand, then the operand must be asserted (set as on) prior to providing the local setting password to gain setting access.

  If setting access is *not* authorized for local operation (front panel or RS232 interface) and the user attempts to obtain setting access, then the **UNAUTHORIZED ACCESS** message is displayed on the front panel.

  If this setting is "Off," firmware upgrades are blocked. If this setting is "On," firmware upgrades are allowed.
- **REMOTE SETTING AUTH**: This setting is used for remote (Ethernet or RS485 interfaces) setting access supervision.

If this setting is “On” (the default setting), then remote setting access functions as normal; that is, a remote password is required). If this setting is “Off”, then remote setting access is blocked even if the correct remote setting password is provided. If this setting is any other FlexLogic operand, then the operand must be asserted (set as on) prior to providing the remote setting password to gain setting access.

If this setting is "Off," firmware upgrades are blocked. If this setting is "On," firmware upgrades are allowed.

- **ACCESS AUTH TIMEOUT**: This setting represents the timeout delay for local setting access. This setting is applicable when the **LOCAL SETTING AUTH** setting is programmed to any operand except “On”. The state of the FlexLogic operand is continuously monitored for an off-to-on transition. When this occurs, local access is permitted and the timer programmed with the **ACCESS AUTH TIMEOUT** setting value is started. When this timer expires, local setting access is immediately denied. If access is permitted and an off-to-on transition of the FlexLogic operand is detected, the timeout is restarted. The status of this timer is updated every five seconds.

The following settings are available through the remote (EnerVista UR Setup) interface only. Select the **Settings > Product Setup > Security** menu item to display the security settings window.

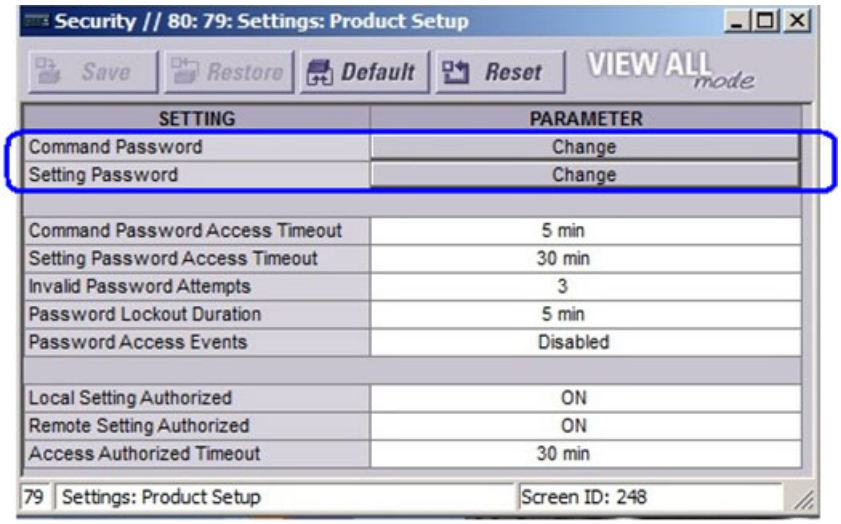

The **Remote Settings Authorized** setting is used for remote (Ethernet or RS485 interfaces) setting access supervision. If this setting is “On” (the default setting), then remote setting access functions as normal; that is, a remote password is required. If this setting is “Off”, then remote setting access is blocked even if the correct remote setting password is provided. If this setting is any other FlexLogic operand, then the operand must be asserted (set as on) prior to providing the remote setting password to gain setting access.

The **Access Authorized Timeout** setting represents the timeout delay remote setting access. This setting is applicable when the **Remote Settings Authorized** setting is programmed to any operand except “On” or “Off”. The state of the FlexLogic operand is continuously monitored for an off-to-on transition. When this occurs, remote setting access is permitted and the timer programmed with the **Access Authorized Timeout** setting value is started. When this timer expires, remote setting access is immediately denied. If access is permitted and an off-to-on transition of the FlexLogic operand is detected, the timeout is restarted. The status of this timer is updated every five seconds.

c) ENERVISTA SECURITY

ENABLING THE SECURITY MANAGEMENT SYSTEM

Access to files is controlled by the operating system and EnerVista software as follows:

- Access privileges to files are defined by the Windows operating system. A standard user does not have access to a file created by an administrator or another user.
- When the EnerVista UR Setup software security system is disabled (passwords are not required), all users have administrator access

The EnerVista security system allows an administrator to manage access privileges of multiple users of EnerVista. It is disabled by default to allow access to the device immediately after installation. When security is disabled, all users have administrator access. GE recommends enabling the EnerVista security before placing the device in service.

To enable the security system and require password use:

1. Select the **Security > User Management** menu item to open the user management window.

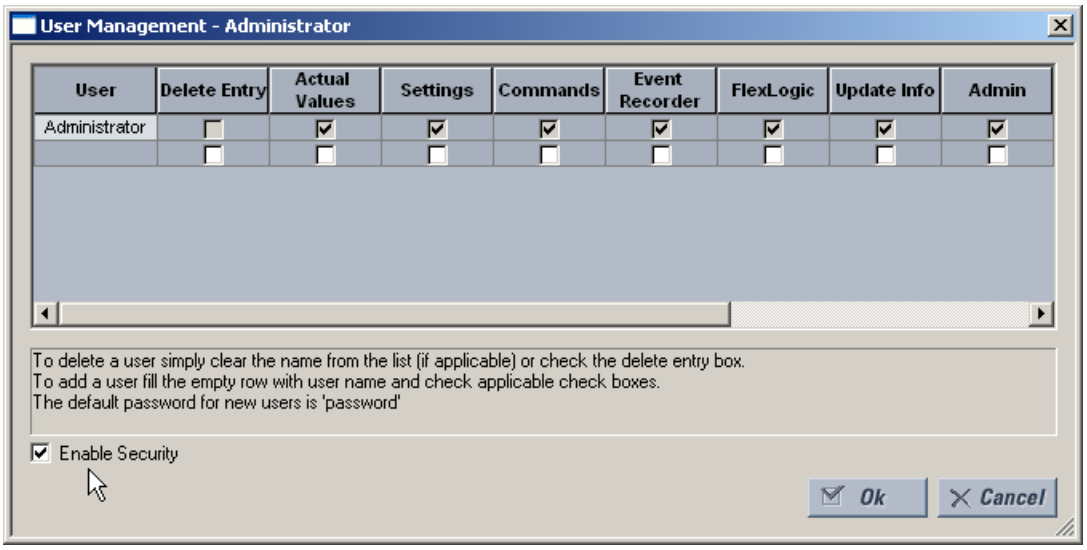

2. Check the **Enable Security** box in the lower-left corner to enable the security management system.

NOTE

If you force password entry using this feature, ensure that you know the Administrator password. If you do not know the password and are locked out of the software, reset the device to factory defaults as outlined later for **COMMANDS ⇨⇩ RELAY MAINTENANCE ⇨ SERVICE COMMAND**. When using CyberSentry, the default password is "ChangeMe1#".

Security is now enabled for the EnerVista UR Setup software. Upon starting the software, users are now required to enter a username and password.

ADDING A NEW USER

The following pre-requisites are required to add user accounts to the EnerVista security management system:

- The user adding the account must have administrator rights
- The EnerVista security management system must be enabled (previous section)

To add user accounts:

1. Select the **Security > User Management** menu item to open the user management window.
2. Enter a username in the **User** field. The username must be 4 to 20 characters in length.

3. Select the user access rights by enabling the check box of one or more of the fields.

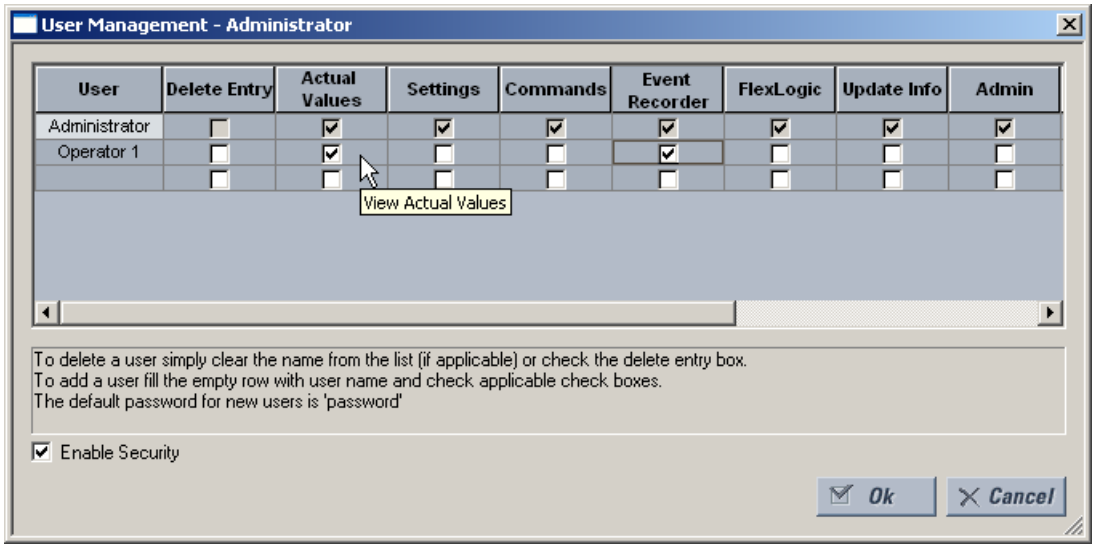

The table outlines access rights.

Table 5–1: ACCESS RIGHTS SUMMARY

FIELD	DESCRIPTION
Delete Entry	Deletes the user account when exiting the user management window
Actual Values	Allows the user to read actual values
Settings	Allows the user to read setting values
Commands	Allows the user to execute commands
Event Recorder	Allows the user to use the digital fault recorder
FlexLogic	Allows the user to read FlexLogic values
Update Info	Allows the user to write to any function to which they have read privileges. When any of the Settings, Event Recorder, and FlexLogic check boxes are enabled by themselves, the user is granted read access. When any of them are enabled in conjunction with the Update Info box, they are granted read and write access. The user is not granted write access to functions that are not checked, even if the Update Info field is checked.
Admin	The user is an EnerVista UR Setup administrator, therefore receiving all of the administrative rights. Exercise caution when granting administrator rights.

4. Click **OK** to add the user account to the security management system.

MODIFYING USER PRIVILEGES

The following pre-requisites are required to modify user privileges in the EnerVista security management system:

- The user modifying the privileges must have administrator rights
- The EnerVista security management system must be enabled

To modify user privileges:

1. Select the **Security > User Management** menu item to open the user management window.
2. Locate the username in the **User** field.

3. Modify the user access rights by enabling or disabling one or more of the check boxes.

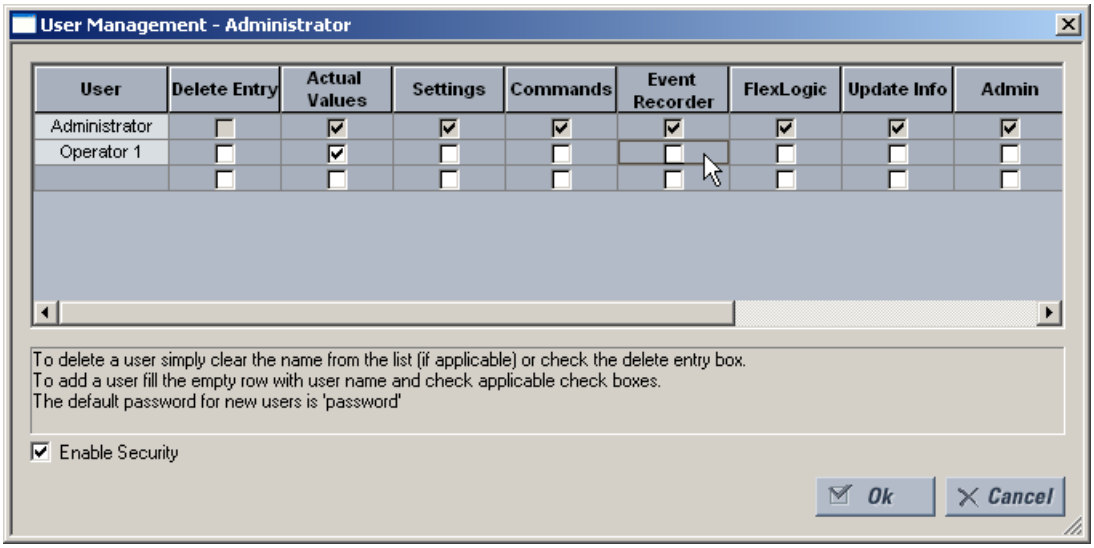

The table outlines access rights.

Table 5–2: ACCESS RIGHTS SUMMARY

FIELD	DESCRIPTION
Delete Entry	Deletes the user account when exiting the user management window
Actual Values	Allows the user to read actual values
Settings	Allows the user to read setting values
Commands	Allows the user to execute commands
Event Recorder	Allows the user to use the digital fault recorder
FlexLogic	Allows the user to read FlexLogic values
Update Info	Allows the user to write to any function to which they have read privileges. When any of the Settings, Event Recorder, and FlexLogic check boxes are enabled by themselves, the user is granted read access. When any of them are enabled in conjunction with the Update Info box, they are granted read and write access. The user is not granted write access to functions that are not checked, even if the Update Info field is checked.
Admin	The user is an EnerVista UR Setup administrator, therefore receiving all of the administrative rights. Exercise caution when granting administrator rights.

4. Click **OK** to save the changes.

d) CYBERSENTRY SECURITY

The EnerVista software provides the means to configure and authenticate UR using either server or device or authentication. Access to various functionality depends on user role.

The login screen of EnerVista has two options for access to the UR, server and device authentication.

Figure 5–2: LOGIN SCREEN FOR CYBERSENTRY

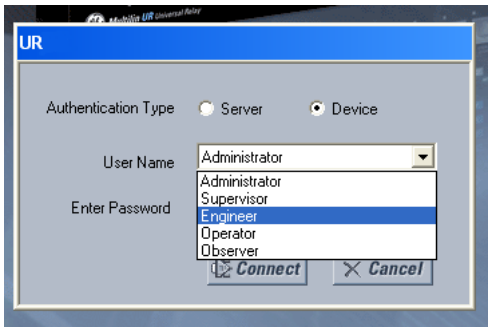

When the "Server" Authentication Type option is selected, the UR uses the RADIUS server and not its local authentication database to authenticate the user.

When the "Device" button is selected, the UR uses its local authentication database and not the RADIUS server to authenticate the user. In this case, it uses built-in roles (Administrator, Engineer, Supervisor, Operator, Observer, or Administrator and Supervisor when Device Authentication is disabled) as login accounts and the associated passwords are stored on the UR device. In this case, access is not user-attributable. In cases where user-attributable access is required, especially for auditable processes for compliance reasons, use server authentication (RADIUS) only.

No password or security information is displayed in plain text by the EnerVista software or UR device, nor are they ever transmitted without cryptographic protection.

NOTE

Only (TCP/UDP) ports and services that are needed for device configuration and for customer enabled features are open. All the other ports are closed. For example, Modbus is on by default, so its TCP port number, 502, is open. But if Modbus is disabled, port 502 is closed. This function has been tested and no unused ports have been found open.

When CyberSentry is enabled, Modbus communications over Ethernet is encrypted, which is not always tolerated by SCADA systems. The UR has a bypass access feature for such situations, which allows unencrypted Modbus over Ethernet. The **BYPASS ACCESS** setting is available on the **SETTINGS ⇨ PRODUCT SETUP ⇨ SECURITY ⇨⇩ SUPERVISORY** screen. Note that other protocols (DNP, 101, 103, 104, EGD) are not encrypted, and they are good communications options for SCADA systems when CyberSentry is enabled.

When using the rear RS485 port and CyberSentry, registers can be read with a maximum buffer of 64 bytes. Settings may or may not be written, so use another port or configure the **SERIAL INACTIVITY TIMEOUT** setting to a high value, such as eight minutes, to give the relay enough time to finish the task.

CYBERSENTRY SETTINGS THROUGH ENERVISTA

CyberSentry security settings are configured under **Device > Settings > Product Setup > Security**.

For the **Device > Settings > Product Setup > Supervisory** option, the panel looks like the following.

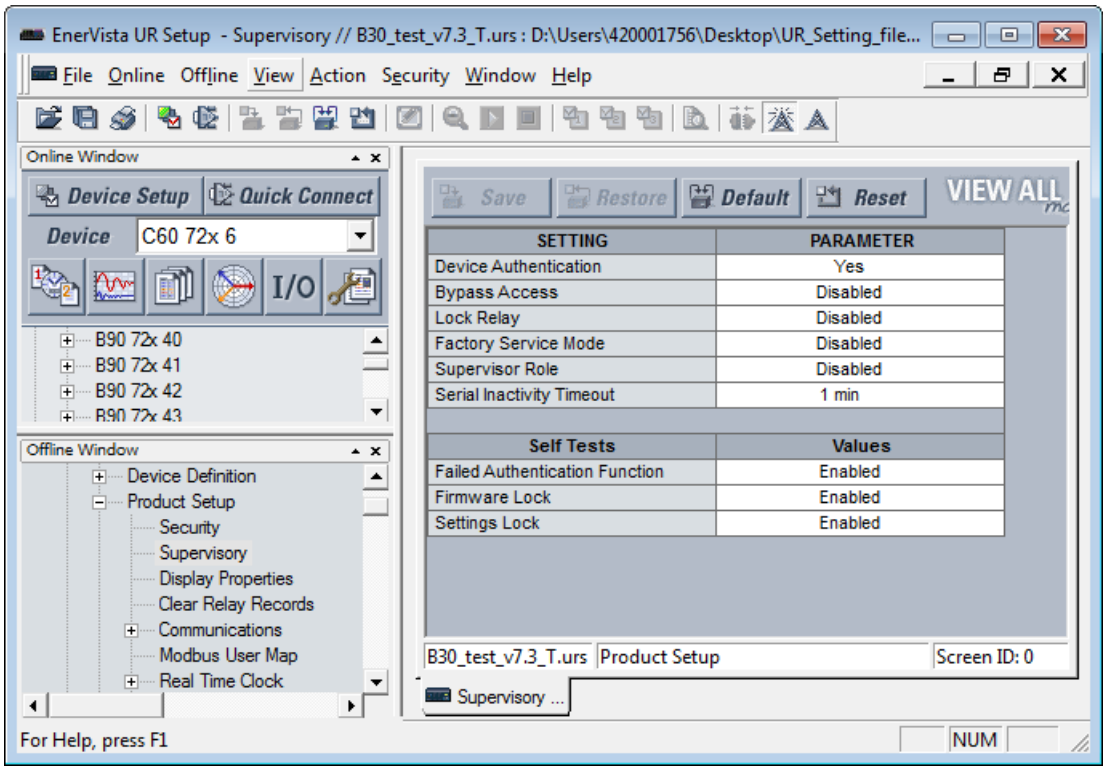

Figure 5–3: SUPERVISORY PANEL

For the Security panel, the following settings are available.

RADIUS Server Settings

SETTING NAME	DESCRIPTION	MIN	MAX	DEFAULT	UNITS	MINIMUM PERMISSION
Primary RADIUS IP Address	IP address of the main RADIUS server. Default value indicates no Primary RADIUS server is configured, and hence RADIUS is disabled. Restart the relay for any change to take effect.	0.0.0.0	223.255.255.254	0.0.0.0	-	Administrator
Primary Authentication Port	RADIUS authentication port	1	65535	1812	-	Administrator
Primary Accounting Port	RADIUS accounting port	1	65535	1813	-	Administrator
Vendor ID	An identifier that specifies RADIUS vendor-specific attributes used with the protocol			Value that represents General Electric		Administrator
RADIUS Authentication (Shared) Secret	Shared secret used in authentication. It displays as asterisks. This setting must meet the CyberSentry password requirements.	See the *Password Requirements* section	See the following password section for requirements	N/A	-	Administrator
RADIUS Authentication Method	Authentication method used by RADIUS server. Currently fixed to EAP-TTLS.	EAP-TTLS	EAP-TTLS	EAP-TTLS	-	Administrator
Confirm RADIUS Authentication (Shared) Secret	Confirmation of the shared secret. The entry displays as asterisks.	See the *Password Requirements* section	245 characters	N/A	-	Administrator

General Security Settings

SETTING NAME	DESCRIPTION	MIN	MAX	DEFAULT	UNITS	MINIMUM PERMISSION
Session Lockout	Number of failed authentications before the device blocks subsequent authentication attempts for the lockout period	0 (lockout disabled)	99	3	-	Administrator
Session Lockout Period	The period in minutes that a user is prevented from logging in after being locked out	0 (no period)	9999	3	min	Administrator
Syslog Server IP Address	The IP address of the target Syslog server to which all security events are transmitted	0.0.0.0	223.255.255.254	0.0.0.0	-	Administrator
Syslog Server Port Number	The UDP port number of the target syslog server to which all security events are transmitted	1	65535	514	-	Administrator
Device Authentication	When enabled, local device authentication with roles is allowed. When disabled, the UR only authenticates to the AAA server (RADIUS). **NOTE:** Administrator and Supervisor (if still enabled) remain active even after device authentication is disabled. The only permission for local Administrator is to re-enable device authentication when device authentication is disabled. To re-enable device authentication, the Supervisor unlocks the device for setting changes, and then the Administrator can re-enable device authentication.	Disabled	Enabled	Enabled	-	Administrator
Firmware Locked	Indicates if the device receives firmware upgrades. If Yes and the firmware upgrade attempt is made, the device denies the upgrade and displays an error message that the lock is set. On each firmware upgrade, this setting goes back to the default.	No	Yes	Yes	-	Administrator
Factory Service Mode	When enabled (checkbox selected), the device can go into factory service mode. To enable, Supervisor authentication is necessary.	Disabled	Enabled	Disabled	-	Supervisor (Administrator when Supervisor is disabled)
Restore to Defaults	Sets the device to factory defaults	No	Yes	No	-	Administrator

SETTING NAME	DESCRIPTION	MIN	MAX	DEFAULT	UNITS	MINIMUM PERMISSION
Supervisor role	When enabled (checkbox selected), the Supervisor role is active. To enable, Administrator authentication is necessary. When disabled, the Supervisor role is inactive. To disable, Supervisor authentication is necessary.	Disabled	Enabled	Enabled	-	Administrator to enable and Supervisor to disable
RADIUS user names	Ensure that RADIUS user names are not the same as local/device role names	See RADIUS server documents	See RADIUS server documents		-	Administrator
Password	Local/device roles except for Observer are password-protected. All RADIUS users are password-protected.	See the *Password Requirements* section	See the following password section for requirements	Change Me1#	Text	The specified role and Administrator, except for Supervisor, where it is only itself

Security Alarm Settings

SETTING NAME	DESCRIPTION / DETAILS	MIN	MAX	DEFAULT	UNITS	MINIMUM PERMISSIONS
Failed Authentications	A threshold number indicating when an alarm is set off to indicate too many failed authentication attempts	0 (disabled)	99	3	-	Administrator
Firmware lock	A Boolean value indicating if the device can receive a firmware upgrade. If Yes and a firmware upgrade attempt is made, the device alarm activates. If No the device alarm does not activate. On each firmware upgrade this setting goes back to the default.	No	Yes	Yes	-	Administrator
Settings lock	A Boolean value indicating if the device can accept any settings changes. If Yes and a settings change attempt is made, the device alarm activates. If No, the device alarm does not activate.	No	Yes	Yes	-	Supervisor (Administrator if Supervisor has been disabled)

CYBERSENTRY SETTINGS THROUGH THE FRONT PANEL

PATH: SETTINGS ⇨ PRODUCT SETUP ⇨ SECURITY

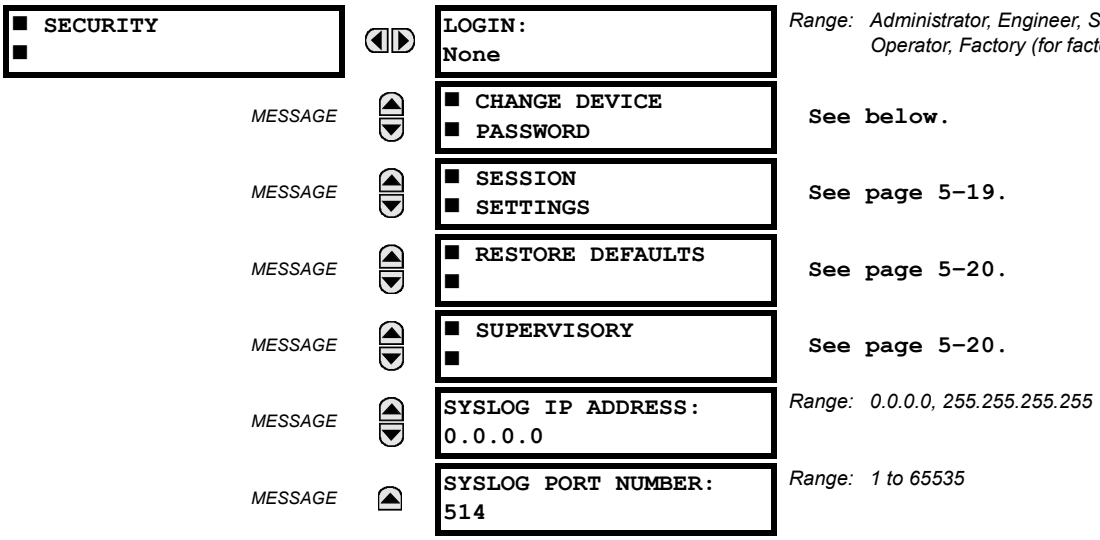

LOGIN: This setting is applicable for *Device Authentication* only. This setting allows a user to login with a specific role, see descriptions below. For the Supervisor role, the "Supervisor Role" setting should be enabled.

Whenever a new role is logged in, the user is prompted with a display to enter a password. Passwords must obey the requirements specified at the beginning of the chapter in the Password Requirements section.The UR device supports five roles. All roles have their corresponding passwords. The Observer is the only role that does not require a password. There are no time-outs for the Administrator, Engineer, Operator, and Supervisor when logged in using the front panel; log out manually or use the **Command > Security** commands in the software.

The roles are defined as follows:

- Administrator: Complete read and write access to all settings and commands. This role does not allow concurrent access. This role has an operand to indicate when it is logged on.
- Engineer: Complete read and write access to all settings and commands with the exception of configuring Security settings and Firmware upgrades. This role does not allow concurrent access.
- Operator: The Operator has read/write access to all settings under the command menu/section. This role does not exist offline.
- Supervisor: This is only an approving role. This role's authentication commits setting changes submitted by Administrator or Engineer. The Supervisor role authenticates to unlock the UR relay for setting changes and not approve changes after the fact. Only Supervisor can set the Settings and Firmware Lock in the Security Settings. This role also has the ability to forcefully logoff any other role and clear the security event log. This role can also be disabled, but only through a Supervisor authentication. When this role is disabled its permissions are assigned to the Administrator role.
- Observer: This role has read only access to all UR settings. This role allows concurrent access but it has no download access to any files on the device. Observer is the default role if no authentication has been done to the device. This role displays as "None" on the front panel.

NOTE The Factory service role is not available and is intended for factory use only.

Device Password

PATH: SETTINGS ⇨ PRODUCT SETUP ⇨ SECURITY ⇨⇩ CHANGE DEVICE PASSWORD

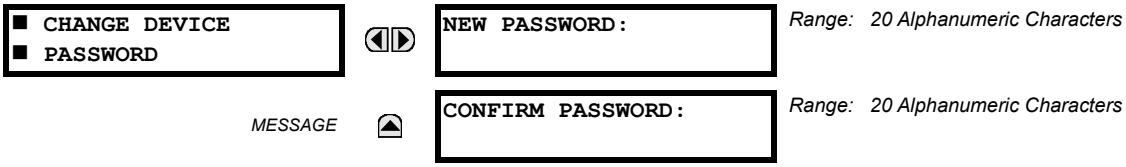

The menu displays on the front panel and EnerVista on a successful login of Administrator role.

Passwords are stored in text format. No encryption is applied.

NOTE **Notes:**

- In Device Authentication mode, the Observer role does not have a password associated with it. In Server Authentication mode the Observer role requires a password.
- The default password is "ChangeMe1#".
- Once the passwords are set, the Administrator with Supervisor approval can change the role associated password.
- In CyberSentry, password encryption is not supported.

Session Settings

PATH: SETTINGS ⇨ PRODUCT SETUP ⇨ SECURITY ⇨⇩ SESSION SETTINGS

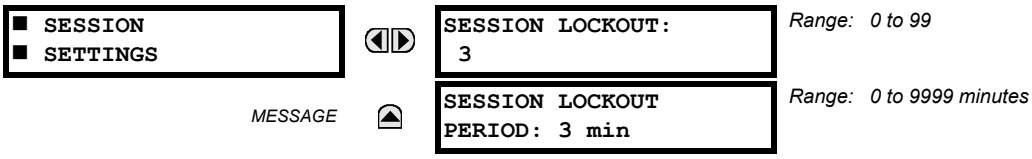

The following session settings are available.

- **SESSION LOCKOUT**: This setting specifies the number of failed authentications (the default is three and the maximum is 99) before the device blocks subsequent authentication attempts for the lockout period. A value of zero means lockout is disabled.
- **SESSION LOCKOUT PERIOD**: This setting specifies the period of time in minutes of a lockout period (the default is three and the maximum is 9999). A value of 0 means that there is no lockout period.

Restore Defaults

PATH: SETTINGS ⇨ PRODUCT SETUP ⇨ SECURITY ⇨⇩ RESTORE DEFAULTS

Range: Yes, No

- **LOAD FACTORY DEFAULTS**: This setting is used to reset all the settings, communication and security passwords. An Administrator role is used to change this setting and a Supervisor role (if not disabled) approves it.

Supervisory

PATH: SETTINGS ⇨ PRODUCT SETUP ⇨ SECURITY ⇨⇩SUPERVISORY

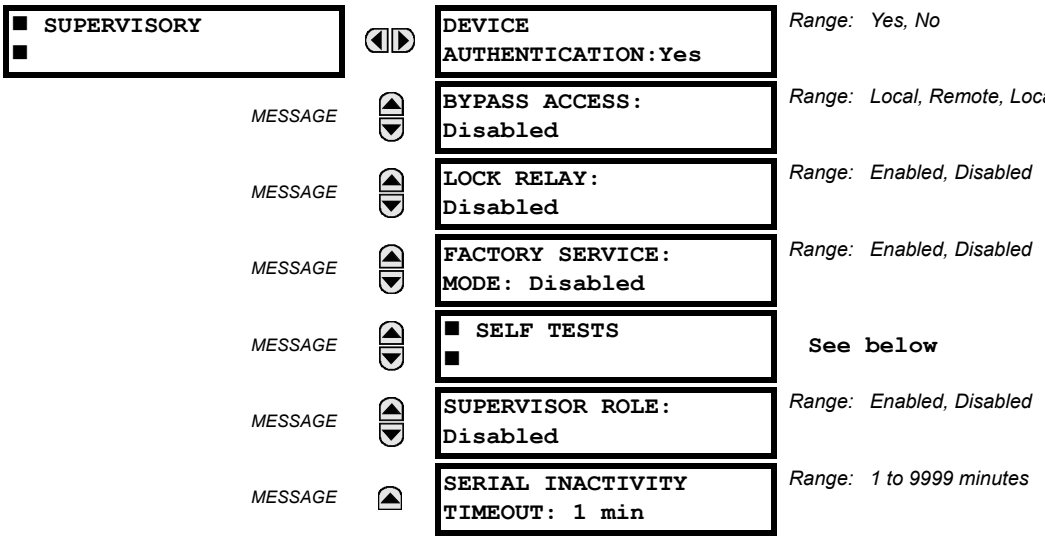

Range: Yes, No

Range: Local, Remote, Local and Remote, Disabled

Range: Enabled, Disabled

Range: Enabled, Disabled

See below

Range: Enabled, Disabled

Range: 1 to 9999 minutes

The Supervisory menu settings are available for Supervisor role only or if the Supervisor role is disabled then for the Administrator role only.

DEVICE AUTHENTICATION: This setting is enabled by default, meaning "Yes" is selected. When enabled, Device Authentication with roles is enabled. When this setting is disabled, the UR only authenticates to the AAA server (Radius). However, the Administrator and Supervisor (when enabled) remain active even after device authentication is disabled and their only permission is to re-enable device authentication. To re-enable device authentication, the Supervisor unlocks the device for setting changes, then the Administrator re-enables device authentication.

BYPASS ACCESS: The bypass security feature provides an easier access, with no authentication and encryption for those special situations when this is considered safe. Only the Supervisor, or the Administrator when the Supervisor role is disabled, can enable this feature.

MODE	FRONT PANEL OR SERIAL (RS232, RS485)	ETHERNET
Normal mode	Authentication — Role Based Access Control (RBAC) and passwords in clear	Authentication — RBAC and passwords encrypted SSH tunneling
Bypass access mode	No passwords for allowed RBAC levels	No passwords for allowed RBAC levels No SSH tunneling

The bypass options are as follows:

- Local — Bypasses authentication for push buttons, keypad, and RS232
- Remote — Bypasses authentication for RS485 and Ethernet
- Local and Remote — Bypasses authentication for push buttons, keypad, RS232, RS485, and Ethernet

When CyberSentry is enabled, Modbus communications over Ethernet is encrypted, which is not always tolerated by SCADA systems. The UR has the Bypass Access feature for such situations, which allows unencrypted Modbus over Ethernet. Setting it to "Remote" ensures no authentication is required over Ethernet and Modbus communication is unencrypted. Only a Supervisor or Administrator (if Supervisor role is disabled) can enable this feature. Note that other protocols (DNP, 101, 103, 104, EGD) are not encrypted, and they are good communications options for SCADA systems when CyberSentry is enabled.

LOCK RELAY: This setting uses a Boolean value (Enable/Disable) to indicate if the device accepts setting changes and whether the device can receive a firmware upgrade. This setting can be changed only by the Supervisor role, if it is enabled or by the Administrator if the Supervisor role is disabled. The Supervisor role enables this setting for the relay to start accepting setting changes or command changes or firmware upgrade. After all the setting changes are applied or commands executed, the Supervisor disables to lock setting changes.

Example: If this setting is "Yes" and an attempt is made to change settings or upgrade the firmware, the UR device denies the setting changes and denies upgrading the firmware. If this setting is "No", the UR device accepts setting changes and firmware upgrade.

This role is disabled by default.

FACTORY SERVICE MODE: When enabled (meaning "Yes" is selected) the device can go into factory service mode. For this setting to become enabled a Supervisor authentication is necessary. The default value is Disabled.

SUPERVISOR ROLE: When enabled (meaning "Yes" is selected) the Supervisor role is active. When "No" is selected this role is disabled. To disabled this setting a Supervisor authentication is necessary. If disabled, the Supervisor role is not allowed to log on. In this case the Administrator can change the settings under the Supervisory menu.

If enabled, Supervisor authentication is required to change the settings in the Supervisory menu. If the Supervisor disables his role after authentication, the Supervisor session remains valid until he switches to another role using MMI or until he ends the current Supervisor session if using communications.

This role is disabled by default.

SERIAL INACTIVITY TIMEOUT: The role logged via a serial port is auto logged off after the Serial Inactivity timer times out. A separate timer is maintained for RS232 and RS485 connections. Set this value to a high number, such as eight minutes, when using the rear RS485 terminals for settings write.

a) SELF TESTS

PATH: SETTINGS ⇨ PRODUCT SETUP ⇨ SECURITY ⇨⇩SUPERVISORY ⇨SELF TESTS

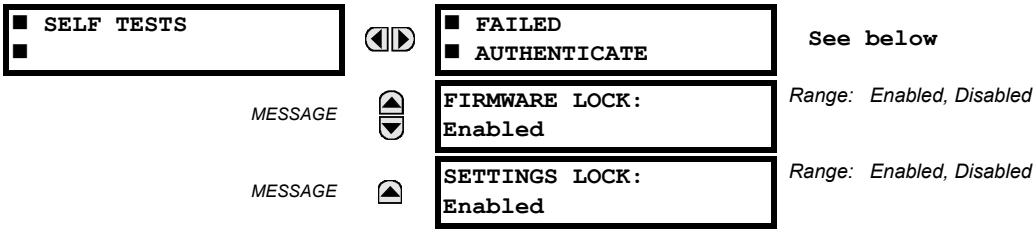

FAILED AUTHENTICATE: When Enabled, the number of failed authentications is compared with the Session Lockout threshold. When the Session Lockout threshold is exceeded, a minor alarm indication comes up. Operand is AUTHENTICATION FAIL.

FIRMWARE LOCK: When Enabled, any firmware upgrade attempt brings up a minor self-test alarm. Operand is UNAUTH FW ATTEMPT.

SETTINGS LOCK: When Enabled, an unauthorized write attempt to a setting for a given role activates a minor self test alarm. Operand is UNAUTH SETTING WRITE.

PATH: SETTINGS ⇨ PRODUCT SETUP ⇨ SECURITY ⇨⇩SUPERVISORY ⇨SELF TESTS ⇨FAILED AUTHENTICATE

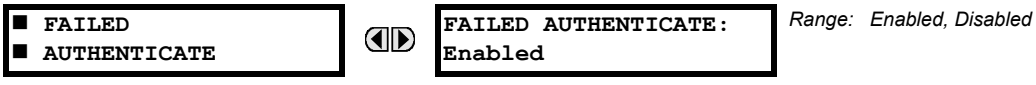

CYBERSENTRY SETUP

When first using CyberSentry security, use the following procedure for set up.

1. Log in to the relay as Administrator by using the Value keys on the front panel to enter the default password "ChangeMe1#". Note that the "Lock relay" setting needs to be disabled in the **Security > Supervisory** menu. When this setting is disabled, configuration and firmware upgrade are possible. By default, this setting is disabled.
2. Enable the Supervisor role if you have a need for it.
3. Make any required changes in configuration, such as setting a valid IP address for communication over Ethernet.
4. Log out of the Administrator account by choosing None.

Next, device or server authentication can be chosen on the login screen, but the choice is available only in EnerVista. Use device authentication to log in using the five pre-configured roles (Administrator, Supervisor, Engineer, Operator, Observer). When using a serial connection, only device authentication is supported. When server authentication is required, characteristics for communication with a RADIUS server must be configured. This is possible only in the EnerVista software. The RADIUS server itself also must be configured. The appendix called RADIUS Server gives an example of how to setup a simple RADIUS server. Once both the RADIUS server and the parameters for connecting UR to the server have been configured, you can choose server authentication on the login screen of EnerVista.

NOTICE The use of CyberSentry for devices communicating through an Ethernet-to-RS485 gateway is not supported. Because these gateways do not support the secure protocols necessary to communicate with such devices, the connection cannot be established. Use the device as a non-CyberSentry device.

NOTICE Users logged in through the front panel are not timed out and cannot be forcefully logged out by a supervisor. Roles logged in through the front panel that do no allow multiple instances (Administrator, Supervisor, Engineer, Operator) must switch to None (equivalent to a logout) when they are done in order to log out.

NOTICE For all user roles except Observer, only one instance can be logged in at one time, for both login by front panel and software.

To configure server authentication:

1. In the EnerVista software, choose device authentication and log in as Administrator.
2. Configure the following RADIUS server parameters: IP address, authentication port, shared secret, and vendor ID.
3. On the RADIUS server, configure the user accounts. Do not use the five pre-defined roles as user names (Administrator, Supervisor, Engineer, Operator, Observer) in the RADIUS server. If you do, the UR relay automatically provides the authentication from the device.
4. In the EnerVista software, choose server authentication and log in using the user name and password configured on the RADIUS server for server authentication login.
5. After making any required changes, log out.

NOTICE When changing settings offline, ensure that only settings permitted by the role that performs the settings download are changed because only those changes are applied.

Pushbuttons (both user-control buttons and user-programmable buttons) located on the front panel can be pressed by an Administrator or Engineer role. This also applies to the reset button, which resets targets, where targets are errors displayed on the front panel or the Targets panel of the EnerVista software. The reset button has special behavior in that it allows these two roles to press it even when they are logged in through the RS232 port and not through the front panel.

To reset the security event log and self-test operands:

1. Log in as Supervisor (if the role is enabled) or Administrator (if the Supervisor role is disabled) and execute a clear security command under **Commands > Security > Clear Security**.

b) SYSLOG FORMAT

System logs are produced with the CyberSentry option. The format is as follows.

	Security log	Event Number	Date & Timestamp	Username	IP address	Role	Activity Value

Event Number — Event identification number (index)

Date & Timestamp — UTC date and time

Username — 255 chars maximum, but in the security log it is truncated to 20 characters

IP address — Device IP address

Role — 16 bit unsigned, of type format F617

ENUMERATION	ROLE
0	None
1	Administrator
2	Supervisor
3	Engineer
4	Operator
5	Factory

Activity Value — 16 bit unsigned

ENUMERATION	DESCRIPTION
1	Authentication Failed
2	User Lockout
3	FW Upgrade
4	FW Lock
5	Settings Lock
6	Settings Change. Because this can fill the entire event log, it is supported by the already existing Settings_Change.log file. This event is not required.
7	Clear Oscillography command
8	Clear Data Logger command (not applicable to all UR products)
9	Clear Demand Records command (not applicable to all UR products)
10	Clear Energy command (not applicable to all UR products)
11	Clear Unauthorized Access command
12	Clear Teleprotection Counters command (not applicable to all UR products)
13	Clear All Relay Records command
14	Role Log in
15	Role Log off

The following events are recorded in the syslog.

Table 5–3: SYSTEM EVENTS RECORDED

EVENT	SEVERITY	DESCRIPTION
FAILED_AUTH, ORIGIN, TIMESTAMP	Warning (4)	A failed authentication with origin information (username and IP:MAC address), a time stamp in UTC time when it occurred
AUTH_LOCKOUT, ORIGIN, TIMESTAMP	Error (3)	An authentication lockout has occurred because of too many failed authentication attempts
FIRMWARE_UPGD, ORIGIN, TIMESTAMP	Warning (4)	Indicates that a change of firmware has occurred
FIRMWARE_LOCK, ORIGIN, TIMESTAMP	Critical (1)	An attempt was made to change firmware while the firmware lock was enabled
SETTING_CHG, ORIGIN, TIMESTAMP	Notice (5)	Indicates setting change(s)
SETTING_LOCK, ORIGIN, TIMESTAMP	Critical (1)	An attempt was made to change settings while the settings lock was enabled
LOGIN, ORIGIN, TIMESTAMP	Warning (4)	Indicates when a certain role logged in
LOGOUT, ORIGIN, TIMESTAMP	Notice (5)	Indicates when a certain role logged out or timed out
CLEAR_OSCILLOGRAPHY	Notice (5)	Clear oscillography command was issued
CLEAR_DATA_LOGGER	Notice (5)	Clear data logger command was issued
CLEAR_DEMAND_RECS	Notice (5)	Clear demand records command was issued
CLEAR_ENERGY	Notice (5)	Clear energy command was issued
RESET_UNAUTH_ACCESS	Warning (4)	Reset Unauthorized access command was issued
CLEAR_TELEPROTECTION_CNT	Notice (5)	Clear teleprotection counters command was issued
CLEAR_ALL_RECS	Warning (4)	Clear all records command was issued

5.2.2 DISPLAY PROPERTIES

PATH: SETTINGS ⇨ PRODUCT SETUP ⇨⇩ DISPLAY PROPERTIES

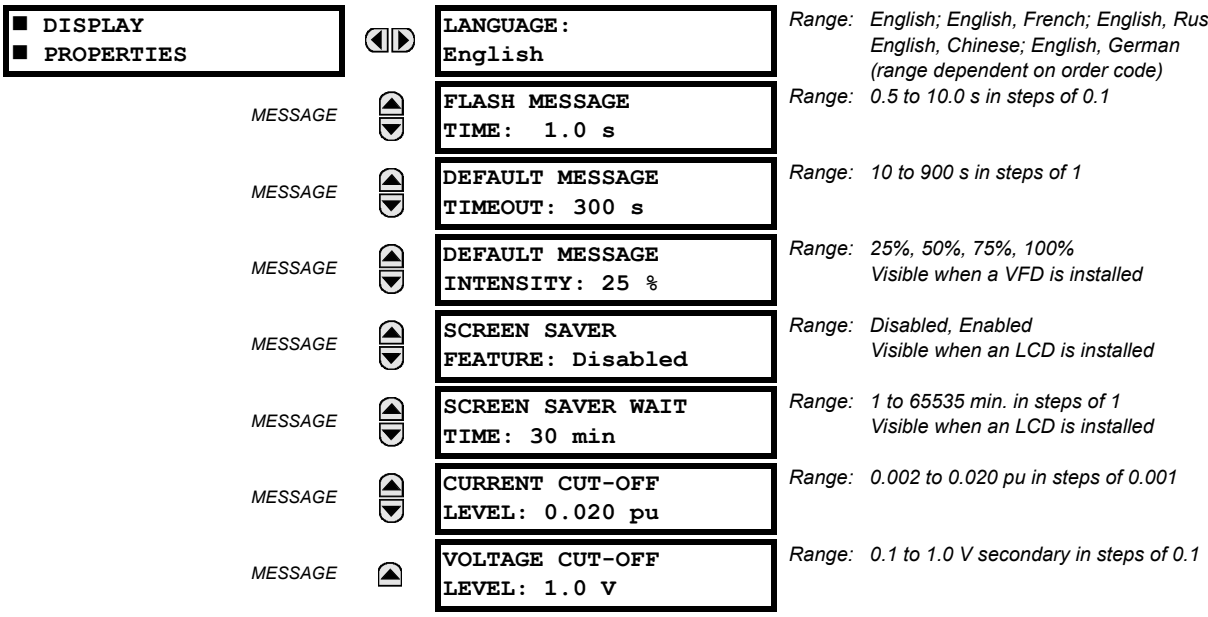

5

Some relay messaging characteristics can be modified to suit different situations using the display properties settings.

- **LANGUAGE**: This setting selects the language used to display settings, actual values, and targets. The setting displays when a language other than English was purchased, and the range depends on the order code of the relay. Restart the relay after changing this setting.
- **FLASH MESSAGE TIME**: Flash messages are status, warning, error, or information messages displayed for several seconds in response to certain key presses during setting programming. These messages override any normal messages. The duration of a flash message on the display can be changed to accommodate different reading rates.
- **DEFAULT MESSAGE TIMEOUT**: If the keypad is inactive for a period of time, the relay automatically reverts to a default message. The inactivity time is modified via this setting to ensure messages remain on the screen long enough during programming or reading of actual values.
- **DEFAULT MESSAGE INTENSITY**: To extend phosphor life in the vacuum fluorescent display, the brightness can be attenuated during default message display. During keypad interrogation, the display always operates at full brightness.
- **SCREEN SAVER FEATURE** and **SCREEN SAVER WAIT TIME**: These settings are only visible if the C70 has a liquid crystal display (LCD) and control its backlighting. When the **SCREEN SAVER FEATURE** is "Enabled", the LCD backlighting is turned off after the **DEFAULT MESSAGE TIMEOUT** followed by the **SCREEN SAVER WAIT TIME**, providing that no keys have been pressed and no target messages are active. When a keypress occurs or a target becomes active, the LCD backlighting is turned on.
- **CURRENT CUT-OFF LEVEL**: This setting modifies the current cut-off threshold. Very low currents (1 to 2% of the rated value) are very susceptible to noise. Some customers prefer very low currents to display as zero, while others prefer the current be displayed even when the value reflects noise rather than the actual signal. The C70 applies a cut-off value to the magnitudes and angles of the measured currents. If the magnitude is below the cut-off level, it is substituted with zero. This applies to phase and ground current phasors as well as true RMS values and symmetrical components. The cut-off operation applies to quantities used for metering, protection, and control, as well as those used by communications protocols. Note that the cut-off level for the sensitive ground input is 10 times lower that the **CURRENT CUT-OFF LEVEL** setting value. Raw current samples available via oscillography are not subject to cut-off.
- **VOLTAGE CUT-OFF LEVEL**: This setting modifies the voltage cut-off threshold. Very low secondary voltage measurements (at the fractional volt level) can be affected by noise. Some customers prefer these low voltages to be displayed as zero, while others prefer the voltage to be displayed even when the value reflects noise rather than the actual signal. The C70 applies a cut-off value to the magnitudes and angles of the measured voltages. If the magnitude is below the cut-off level, it is substituted with zero. This operation applies to phase and auxiliary voltages, and symmetrical

components. The cut-off operation applies to quantities used for metering, protection, and control, as well as those used by communications protocols. Raw samples of the voltages available via oscillography are not subject cut-off.

The **CURRENT CUT-OFF LEVEL** and the **VOLTAGE CUT-OFF LEVEL** are used to determine the metered power cut-off levels. The power cut-off level is calculated as shown below. For Delta connections:

$$\text{3-phase power cut-off} = \frac{\sqrt{3} \times \textbf{CURRENT CUT-OFF LEVEL} \times \textbf{VOLTAGE CUT-OFF LEVEL} \times \text{VT primary} \times \text{CT primary}}{\text{VT secondary}} \quad \textbf{(EQ 5.3)}$$

For Wye connections:

$$\text{3-phase power cut-off} = \frac{3 \times \textbf{CURRENT CUT-OFF LEVEL} \times \textbf{VOLTAGE CUT-OFF LEVEL} \times \text{VT primary} \times \text{CT primary}}{\text{VT secondary}} \quad \textbf{(EQ 5.4)}$$

$$\text{per-phase power cut-off} = \frac{\textbf{CURRENT CUT-OFF LEVEL} \times \textbf{VOLTAGE CUT-OFF LEVEL} \times \text{VT primary} \times \text{CT primary}}{\text{VT secondary}} \quad \textbf{(EQ 5.5)}$$

where VT primary = VT secondary × VT ratio and CT primary = CT secondary × CT ratio.

For example, given the following settings:

CURRENT CUT-OFF LEVEL: "0.02 pu"
VOLTAGE CUT-OFF LEVEL: "1.0 V"
PHASE CT PRIMARY: "100 A"
PHASE VT SECONDARY: "66.4 V"
PHASE VT RATIO: "208.00 : 1"
PHASE VT CONNECTION: "Delta".

We have:

CT primary = "100 A", and
VT primary = **PHASE VT SECONDARY** x **PHASE VT RATIO** = 66.4 V x 208 = 13811.2 V

The power cut-off is therefore:

power cut-off = (**CURRENT CUT-OFF LEVEL** × **VOLTAGE CUT-OFF LEVEL** × CT primary × VT primary)/VT secondary
= ($\sqrt{3}$ × 0.02 pu × 1.0 V × 100 A × 13811.2 V) / 66.4 V
= 720.5 watts

Any calculated power value below this cut-off will not be displayed. As well, the three-phase energy data will not accumulate if the total power from all three phases does not exceed the power cut-off.

NOTE

Lower the **VOLTAGE CUT-OFF LEVEL** and **CURRENT CUT-OFF LEVEL** with care as the relay accepts lower signals as valid measurements. Unless dictated otherwise by a specific application, the default settings of "0.02 pu" for **CURRENT CUT-OFF LEVEL** and "1.0 V" for **VOLTAGE CUT-OFF LEVEL** are recommended.

5.2.3 CLEAR RELAY RECORDS

PATH: SETTINGS ⇨ PRODUCT SETUP ⇨⇩ CLEAR RELAY RECORDS

■ CLEAR RELAY ■ RECORDS		CLEAR USER REPORTS: Off	*Range: FlexLogic operand*
	MESSAGE	CLEAR EVENT RECORDS: Off	*Range: FlexLogic operand*
	MESSAGE	CLEAR OSCILLOGRAPHY: Off	*Range: FlexLogic operand*
	MESSAGE	CLEAR DATA LOGGER: Off	*Range: FlexLogic operand*
	MESSAGE	RESET UNAUTH ACCESS: Off	*Range: FlexLogic operand*
	MESSAGE	CLEAR DIR I/O STATS: Off	*Range: FlexLogic operand.* *Valid only for units with Direct I/O module.*

Selected records can be cleared from user-programmable conditions with FlexLogic operands. Assigning user-programmable pushbuttons to clear specific records are typical applications for these commands. Since the C70 responds to rising edges of the configured FlexLogic operands, they must be asserted for at least 50 ms to take effect.

Clearing records with user-programmable operands is not protected by the command password. However, user-programmable pushbuttons are protected by the command password. Thus, if they are used to clear records, the user-programmable pushbuttons can provide extra security if required.

For example, to assign user-programmable pushbutton 1 to clear demand records, the following settings should be applied.

1. Assign the clear demand function to pushbutton 1 by making the following change in the **SETTINGS ⇨ PRODUCT SETUP ⇨⇩ CLEAR RELAY RECORDS** menu:

   CLEAR DEMAND: "PUSHBUTTON 1 ON"

2. Set the properties for user-programmable pushbutton 1 by making the following changes in the **SETTINGS ⇨ PRODUCT SETUP ⇨⇩ USER-PROGRAMMABLE PUSHBUTTONS ⇨ USER PUSHBUTTON 1** menu:

   PUSHBUTTON 1 FUNCTION: "Self-reset"
   PUSHBTN 1 DROP-OUT TIME: "0.20 s"

5.2.4 COMMUNICATIONS

a) MAIN MENU

PATH: SETTINGS ⇨ PRODUCT SETUP ⇨⇩ COMMUNICATIONS

■ COMMUNICATIONS ■	◀▶	■ SERIAL PORTS ■	See page 5–27.
MESSAGE	▲▼	■ NETWORK ■	See page 5–29.
MESSAGE	▲▼	■ IPv4 ROUTE TABLE ■	See page 5–32.
MESSAGE	▲▼	■ MODBUS PROTOCOL ■	See page 5–35.
MESSAGE	▲▼	PROTOCOL: DNP 3.0	*Range: DNP 3.0, IEC 60870-5-104, IEC 60870-5-103*
MESSAGE	▲▼	■ DNP PROTOCOL ■	See page 5–37.
MESSAGE	▲▼	■ DNP / IEC104 ■ POINT LISTS	See page 5–40.
MESSAGE	▲▼	■ IEC 61850 PROTOCOL ■	See page 5–41.
MESSAGE	▲▼	■ WEB SERVER ■ HTTP PROTOCOL	See page 5–55.
MESSAGE	▲▼	■ TFTP PROTOCOL ■	See page 5–56.
MESSAGE	▲▼	■ IEC 60870-5-104 ■ PROTOCOL	See page 5–56.
MESSAGE	▲	■ IEC103 ■ PROTOCOL	See page 5–57.

b) SERIAL PORTS

PATH: SETTINGS ⇨ PRODUCT SETUP ⇨⇩ COMMUNICATIONS ⇨ SERIAL PORTS

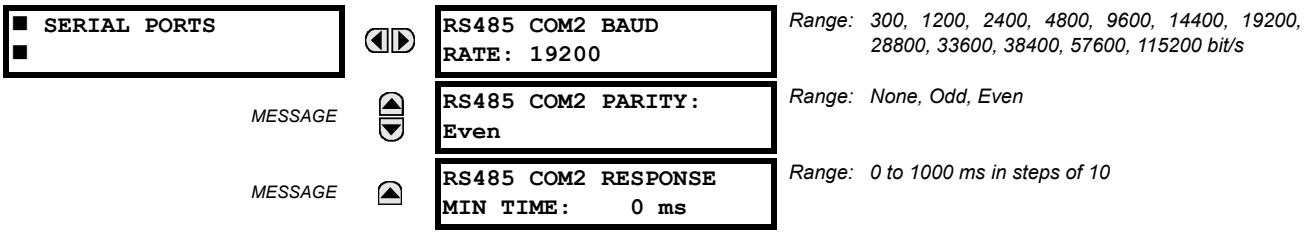

RS485 COM2 BAUD RATE and **PARITY**: The C70 is equipped with two independent serial communication ports. The faceplate RS232 port is intended for local use and is fixed at 19200 bit/s baud and even parity. The rear COM2 port is RS485 and has settings for baud rate and parity. It is important that these parameters agree with the settings used on the computer or other equipment that is connected to these ports. Any of these ports can be connected to a computer running EnerVista UR Setup. This software can download and upload setting files, view measured parameters, and upgrade the relay firmware. A maximum of 32 relays can be daisy-chained and connected to a DCS, PLC, or computer using the RS485 ports. If IEC 60870-103 is chosen as the protocol, valid baud rates are 9600 and 19200 bit/s, and valid parity is Even.

RS485 COM2 RESPONSE MIN TIME: This setting specifies the minimum time before the rear RS485 port transmits after receiving data from a host. This feature allows operation with hosts that hold the RS485 transmitter active for some time after each transmission.

c) ETHERNET NETWORK TOPOLOGY

The C70 has three Ethernet ports. Each Ethernet port must belong to a different network or subnetwork. Configure the IP address and subnet to ensure that each port meets this requirement. Two subnets are different when the bitwise AND operation performed between their respective IP address and mask produces a different result. Communication becomes unpredictable when more than one port is configured to the same subnet.

Example 1

IP1/Mask1: 10.1.1.2/255.255.255.0 (where LAN 1 is 10.1.1.x/255.255.255.0)

IP2/Mask2: 10.2.1.2/255.255.255.0 (where LAN2 is 10.2.1.x/255.255.255.0)

IP3/Mask3: 10.3.1.2/255.255.255.0 (where LAN3 is 10.3.1.x/255.255.255.0)

Example 2

IP1/Mask1: 10.1.1.2/255.0.0.0 (where LAN1 is 10.x.x.x/255.0.0.0)

IP2/Mask2: 11.1.1.2/255.0.0.0 (where LAN2 is 11.x.x.x/255.0.0.0)

IP3/Mask3: 12.1.1.2/255.0.0.0 (where LAN3 is 12.x.x.x/255.0.0.0)

Example 3 — Incorrect

IP1/Mask1: 10.1.1.2/255.0.0.0

IP2/Mask2: 10.2.1.2/255.0.0.0

IP3/Mask3: 10.3.1.2/255.0.0.0

This example is incorrect because the mask of 255.0.0.0 used for the three IP addresses makes them belong to the same network of 10.x.x.x.

Single LAN, No Redundancy

The topology shown in the following figure allows communications to SCADA, local configuration/monitoring through EnerVista, and access to the public network shared on the same LAN. No redundancy is provided.

Figure 5–4: NETWORK CONFIGURATION FOR SINGLE LAN

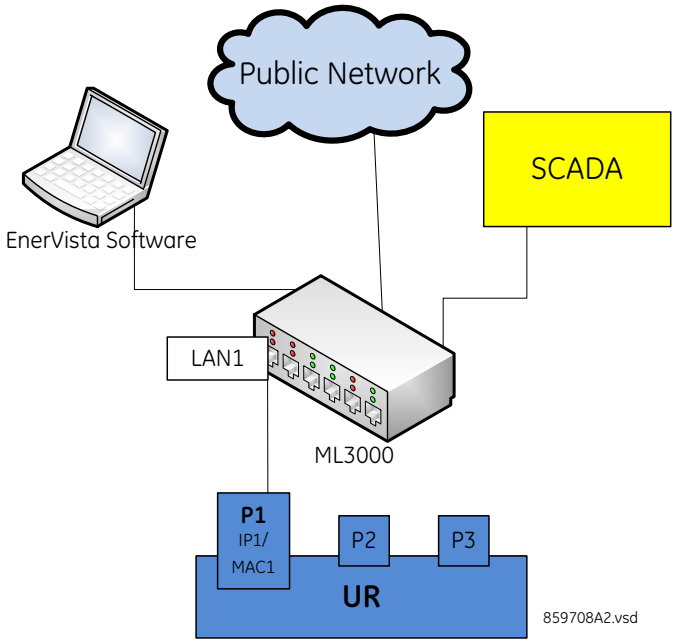

Multiple LANS, with Redundancy

The topology in the following figure provides local configuration/monitoring through EnerVista software and access to the public network shared on LAN1, to which port 1 (P1) is connected. There is no redundancy provided on LAN1. Communications to SCADA is provided through LAN2. P2 and P3 are connected to LAN2, where P2 is the primary channel and P3 is the redundant channel. In this configuration, P3 uses the IP and MAC address of P2.

Figure 5–5: MULTIPLE LANS, WITH REDUNDANCY

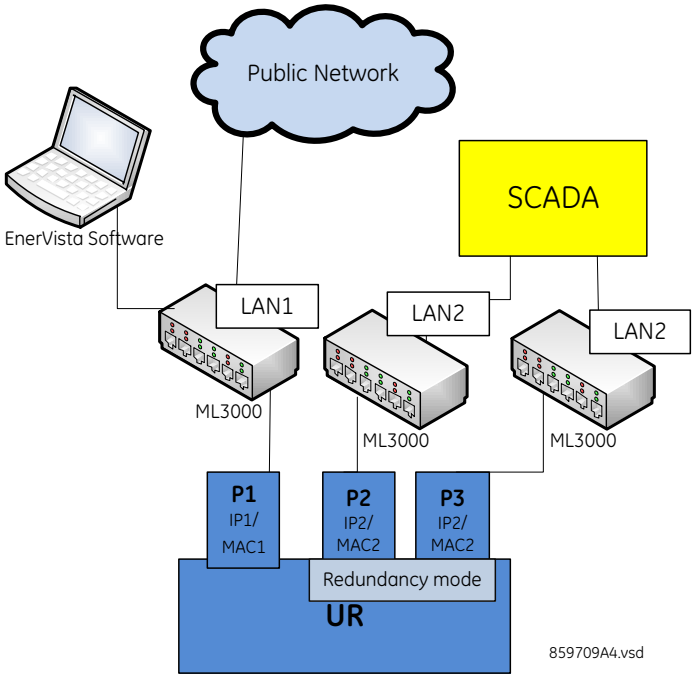

Multiple LANS, No Redundancy

The following topology provides local configuration/monitoring through EnerVista software on LAN1, to which port 1 (P1) is connected, access to the public network on LAN2, to which port 2 (P2) is connected and communications with SCADA on LAN3, to which port 3 (P3) is connected. There is no redundancy.

Figure 5–6: MULTIPLE LANS, NO REDUNDANCY

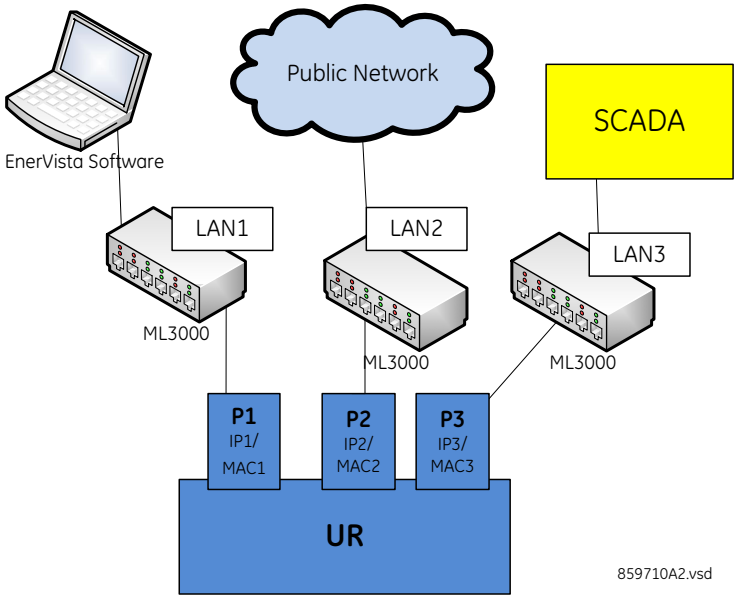

d) NETWORK

As outlined in the previous section, when using more than one Ethernet port, configure each to belong to a different network or subnet using the IP addresses and mask. Configure the network IP and subnet settings before configuring the routing settings.

Follow the IP and subnet mask rules outlined in the Configuring the C70 for Software Access section of the first chapter.

To obtain a list of all port numbers used, for example for audit purposes, contact GE technical support with substantiating information, such as the serial number and order code of your device.

PATH: SETTINGS ⇨ PRODUCT SETUP ⇨⇩ COMMUNICATIONS ⇨⇩ NETWORK ⇨ NETWORK PORT 1(3)

```
■ NETWORK PORT 1
■
```

```
PRT1 IP ADDRESS:
127.0.0.1
```

Range: Standard IPV4 address format

MESSAGE

```
PRT1 SUBNET IP MASK:
255.0.0.0
```

Range: Standard IPV4 address format

MESSAGE

```
PRT1 GOOSE ENABLED:
Enabled
```

Range: Enabled, Disabled

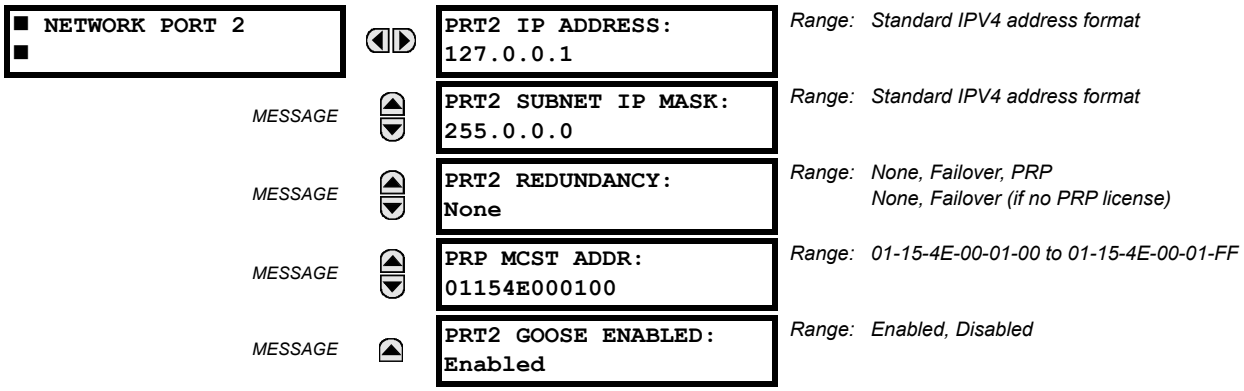

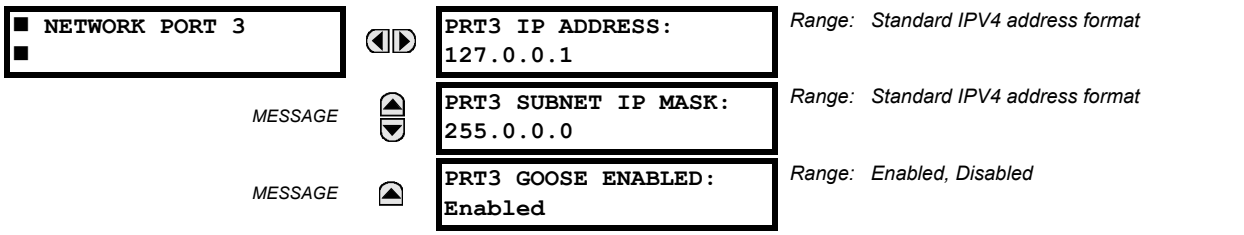

The IP addresses are used with the DNP, Modbus/TCP, IEC 61580, IEC 60870-5-104, TFTP, HTTP, and PRP protocols. PRP is explained in its own section later.

PRT1 (2 OR 3) IP ADDRESS: This setting sets the ports IPv4 address in standard IPV4 format. This setting is valid on port 3 if port 2 **REDUNDANCY** is set to None.

PRT1 (2 OR 3) SUBNET MASK: This setting sets the ports IPv4 subnet mask in standard IPV4 format. This setting is valid on port 3 if port 2 **REDUNDANCY** is set to None.

PRT1 (2 OR 3) GOOSE ENABLED: This setting enables/disables Goose on the respective port. By default Goose is enabled.

PRT2 REDUNDANCY determines if ports 2 and 3 operate in redundant or independent mode. If the software options in the order code include PRP, the available options are None, Failover, and PRP. If the software options in the order code do not include PRP, the available options are None and Failover. In non-redundant mode (**REDUNDANCY** set to None), ports 2 and 3 operate independently with their own MAC, IP, and mask addresses. If **REDUNDANCY** is set to Failover, the operation of ports 2 and 3 is as follows:

- Ports 2 and 3 use the port 2 MAC address, IP address, and mask
- The configuration fields for IP address and mask on port 3 are hidden
- Port 3 is in standby mode and does not actively communicate on the Ethernet network but monitors its link to the Multilink switch. If port 2 detects a problem with the link, communications is switched to Port 3. Port 3 is, in effect, acting as a redundant or backup link to the network for port 2. Once port 2 detects that the link between itself and the switch is good and that communication is healthy for five minutes, then switching back to port 2 is performed. The delay in switching back ensures that rebooted switching devices connected to the C70, which signal their ports as active prior to being completely functional, have time to completely initialize themselves and become active. Once port 2 is active again, port 3 returns to standby mode.

If **REDUNDANCY** is set to PRP, the operation of ports 2 and 3 is as follows:

- Ports 2 and 3 use the port 2 MAC address, IP address, and mask
- The configuration fields for IP address and mask on port 3 are overwritten with those from port 2. This is visible on the front panel but not displayed in the EnerVista software.
- Port 2 **MCST ADDRESS** field is visible

- The port 2 PTP function still uses only port 2 and the port 3 PTP function still uses only port 3. The relay still synchronizes to whichever port has the best master. When ports 2 and 3 see the same master, as is typically the case for PRP networks, the port with the better connectivity is used.

NOTE

The two ports must be connected to completely independent LANS with no single point of failure, such as common power supplies that feed switches on both LANS.

When **REDUNDANCY** is set to PRP or failover and the network path with resolved default gateway is broken, then the ARP table needs approximately five seconds to rebuild. The layer 2 protocols (GOOSE and PTP) are not affected. However, the TCP/IP or UDP protocols (MMS connections, DNP3.0, and so on) can require reconnection if their active connection does not ride through re-transmission frames.

For this setting change to take effect, restart the unit.

PRT2 PRP MCST ADDR: This setting allows the user to change the multicast address used by the PRP supervision frames. This setting is available if **REDUNDANCY** is set to PRP. All devices in the same PRP network need to have the same multicast address. Choose an address that does not conflict with another multicast protocol.

e) FAR-END FAULT INDICATION (FEFI)

Since 100BASE-FX does not support Auto-Negotiation, a Far-End Fault Indication (FEFI) feature is included in UR 7 that allows for detection of link failures.

The purpose of the Far-End Fault feature is to allow the stations on both ends of a pair of fibers to be informed when there is a problem with one of the fibers. Without the Far-End Fault feature, it is impossible for a fiber interface to detect a problem that affects only its transmit fiber.

When the Far-End Fault feature is supported, a loss of receive signal (link) causes the transmitter to generate a Far-End Fault pattern in order to inform the device at the far end of the fiber pair that a fault has occurred.

When the local receiver again detects a signal, the local transmitter automatically returns to normal operation.

If a Far-End Fault pattern is received by a fiber interface that supports the Far-End Fault feature and it is enabled, it reacts by dropping the link as if there were no signal at all.

If the receiving interface does not support the Far-End Fault feature or has it disabled, an incoming Far-End Fault pattern is ignored.

It is strongly recommended to have switches used at substation automation support the Far-End Fault feature, especially when UR 7 redundancy Failover is selected for redundancy purpose.

f) PARALLEL REDUNDANCY PROTOCOL (PRP)

The Parallel Redundancy Protocol (PRP) defines a redundancy protocol for high availability in substation automation networks. It applies to networks based on Ethernet technology (ISO/IEC 8802-3) and is based on the second edition (July 2012) of the IEC 62439-3, clause 4.

PRP is designed to provide seamless recovery in case of a single failure in the network, by using a combination of LAN duplication and frame duplication technique. Identical frames are sent on two completely independent networks that connect source and destination. Under normal circumstances both frames reach the destination and one of them is sent up the OSI stack to the destination application, while the second one is discarded. If an error occurs in one of the networks and

traffic is prevented from flowing on that path, connectivity is still provided through the other network to ensure continuous communication. Take care when designing the two LANs, so that no single point of failure (such as a common power supply) is encountered, as such scenarios can bring down both LANs simultaneously.

Figure 5–7: EXAMPLE OF PARALLEL REDUNDANT NETWORK

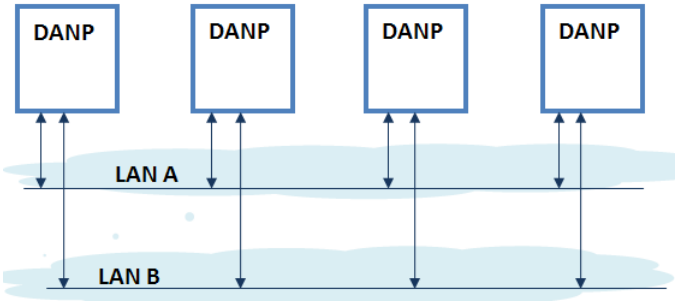

PRP uses specialized nodes called doubly attached nodes (DANPs) for handling the duplicated frames. DANPs devices have an additional module, called Link Redundancy Entity (LRE). LRE is responsible for duplicating frames and adding the specific PRP trailer when sending the frames out on the LAN, as well as making decisions on received frames as to which one is sent up the OSI stack to the application layer and which one is discarded. LRE is responsible for making PRP transparent to the higher layers of the stack. There is a second type of specialized device used in PRP networks, called RedBox, with the role of connecting Single Attached Nodes (SANs) to a redundant network.

UR relays implement only the DANP functionality. The RedBox functionality is not implemented.

5

The original standard IEC 62439-3 (2010) was amended to align PRP with the High-availability Seamless Redundancy (HSR) protocol. To achieve this, the original PRP was modified at the cost of losing compatibility with the PRP 2010 version. The revised standard IEC 62439-3 (2012) is commonly referred to as PRP-1, while the original standard is PRP-0. The UR relays support only PRP-1.

The relay implements PRP on two of its Ethernet ports, specifically Port 2 and 3 of the CPU module. Use the previous section (network port configuration) to configure PRP.

PRP is purchased as a separate option. If purchased (valid order code), PRP can be enabled in configuration through a setting available on the network configuration menu, REDUNDANCY, which already has the capability of enabling failover redundancy. The options on this setting must be changed to accommodate two types of redundancy: failover and PRP. When REDUNDANCY is set to either failover or PRP, the ports dedicated for PRP (Port 2 and 3) operate in redundant mode. In this mode, Port 3 uses the Mac, IP address, and mask of Port 2.

g) ROUTING

PATH: SETTINGS ⇨ PRODUCT SETUP ⇨⇩ COMMUNICATIONS ⇨⇩ IPv4 ROUTE TABLE

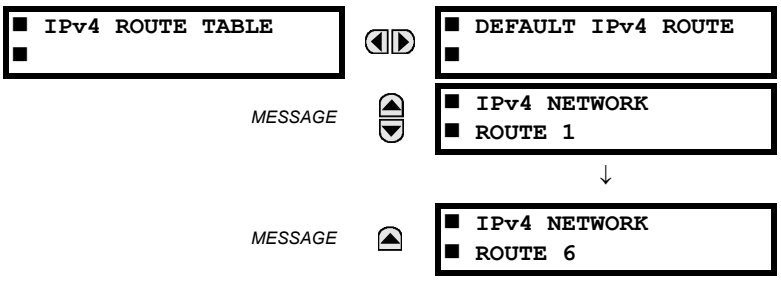

A default route and a maximum number of six static routes can be configured.

The default route is used as the last choice when no other route towards a given destination is found.

Range: Standard IPV4 unicast address format

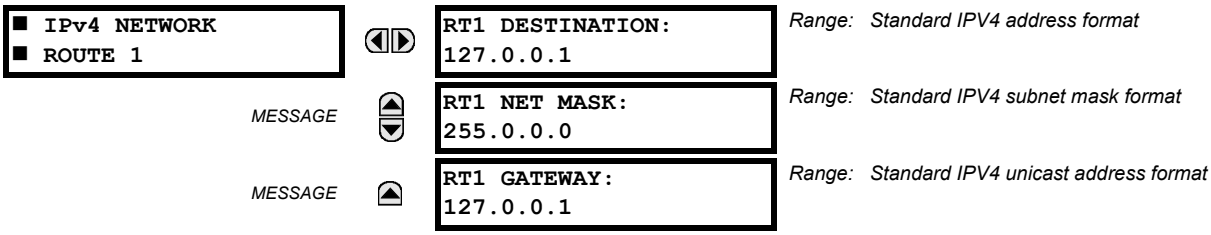

Configure the network IP and subnet settings before configuring the routing settings.

ADDING AND DELETING STATIC ROUTES

Host routes are not supported at present.

The routing table configuration is available on the serial port and front panel. This is a deliberate decision, to avoid loss of connectivity when remotely configuring the UR.

By default the value of the destination field is 127.0.0.1 for all static routes (1 to 6). This is equivalent to saying that the static routes are not configured. When the destination address is 127.0.0.1, the mask and gateway must be also kept on default values.

By default, the value of the route gateway address is 127.0.0.1. This means the default route is not configured.

To add a route:

1. Use any of the static network route entries numbered 1 to 6 to configure a static network route. Once a route destination is configured for any of the entries 1 to 6, that entry becomes a static route and it must meet all the rules listed in the next section, General Conditions to be Satisfied by Static Routes.
2. To configure the default route, enter a default gateway address. Once a default gateway address is configured, it must be validated against condition 2 of the General Conditions to be Satisfied by Static Routes.

To delete a route:

1. Replace the route destination with the default loopback address (127.0.0.1). When deleting a route, the mask and gateway must be also brought back to default values.
2. Delete the default route by replacing the default gateway with the default value 127.0.0.1.

GENERAL CONDITIONS TO BE SATISFIED BY STATIC ROUTES

The following rules are validated internally:

- The route mask has IP mask format. In binary this needs to be a set of contiguous bits of 1 from left to right, followed by one or more contiguous bits of 0.
- The route destination and mask must match. This can be verified by checking that
  RtDestination and RtMask = RtDestination
  Example of good configuration: RtDestination = 10.1.1.0; Rt Mask = 255.255.255.0
  Example of bad configuration: RtDestination = 10.1.1.1; Rt Mask = 255.255.255.0

The following rules must be observed when you configure static routes:

- The route destination must not be a connected network
- The route gateway must be on a connected network. This rule applies to the gateway address of the default route as well. This can be verified by checking that:
  (RtGwy & Prt1Mask) == (Prt1IP & Prt1Mask) || (RtGwy & Prt2Mask) == (Prt2IP & Prt2Mask) || (RtGwy & Prt3Mask) == (Prt3IP & Prt3Mask)

  where

  & is the bitwise-AND operator

  == is the equality operator

  || is the logical OR operator

ROUTING BEHAVIOR COMPARED TO PREVIOUS RELEASES

Prior to release 7.10, the UR did not have an explicit manner of configuring routes. The only available route was the default route configured as part of the network settings (port gateway IP address). This limited the ability to route to specific destinations, particularly if these destinations were reachable through a different interface than the one on which the default gateway was.

Starting with UR 7.10, up to six static network routes can be configured in addition to a default route. The default route configuration was also moved from the network settings into the routing section.

The figure shows an example of topology that benefits from the addition of static routes.

Figure 5–8: USING STATIC ROUTES

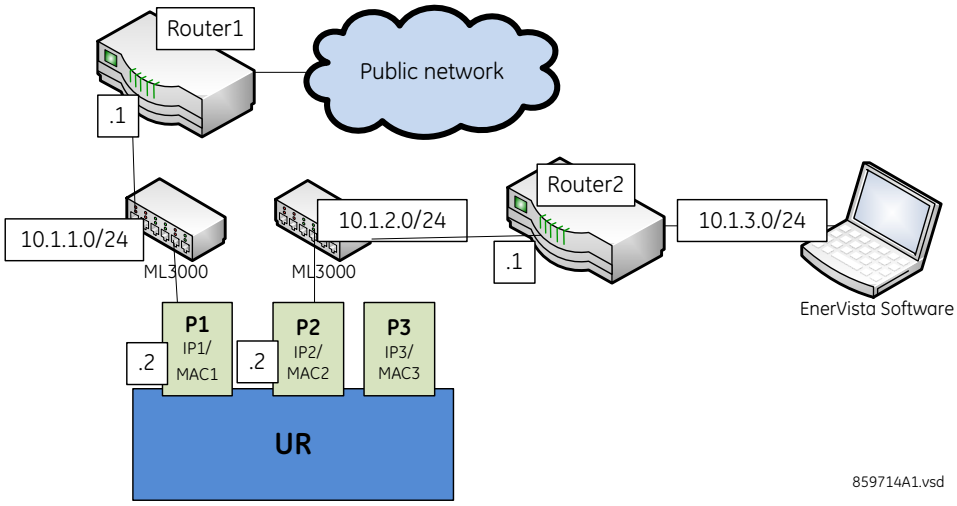

In the figure, the UR connects through the following two Ethernet ports:

- Port 1 (IP address 10.1.1.2) connects the UR to LAN 10.1.1.0/24 and to the Internet through Router1. Router 1 has an interface on 10.1.1.0/24 and the IP address of this interface is 10.1.1.1.
- Port 2 (IP address 10.1.2.2) connects the UR to LAN 10.1.2.0/24 and to the EnerVista software through Router 2. Router 2 has an interface on 10.1.2.0/24 and the IP address of this interface is 10.1.2.1.

The configuration before release 7.10 was as follows:

- PRT1 IP ADDRESS = 10.1.1.2
  PRT1 SUBNET IP MASK = 255.255.255.0
  PRT1 GWY IP ADDRESS = 10.1.1.1
  PRT2 IP ADDRESS = 10.1.2.2
  PRT2 SUBNET IP MASK = 255.255.255.0

The behavior before release 7.10 was as follows. When sending packets to EnerVista, the UR noticed that the destination was not on a connected network and it tried to find a route to destination. Since the default route was the only route it knew, it used it. Yet EnerVista was on a private network, which was not reachable through Router 1. Hence a destination unreachable message was received from the router.

The configuration starting release 7.10 is as follows:

- PRT1 IP ADDRESS = 10.1.1.2
  PRT1 SUBNET IP MASK = 255.255.255.0
  PRT2 IP ADDRESS = 10.1.2.2
  PRT2 SUBNET IP MASK = 255.255.255.0
  IPV4 DEFAULT ROUTE: GATEWAY ADDRESS = 10.1.1.1
  STATIC NETWORK ROUTE 1: RT1 DESTINATION = 10.1.3.0/24; RT1 NET MASK = 255.255.255.0; and RT1 GATEWAY = 10.1.2.1

The behavior since release 7.10 is as follows. There is one added static network route to the destination 10.1.3.0/24, where a computer running EnerVista is located. This static route uses a different gateway (10.1.2.1) than the default route. This gateway is the address of Router 2, which has knowledge about 10.1.3.0 and is able to route packets coming from UR and destined to EnerVista.

SHOW ROUTES AND ARP TABLES

This feature is available on the Web interface, where the main menu contains an additional Communications menu and two submenus:

- Routing Table
- ARP Table

The tables outline the information displayed when the two submenus are selected.

Table 5–4: ROUTING TABLE INFORMATION

FIELD	DESCRIPTION
Destination	The IP address of the remote network to which this route points
Mask	The network mask for the destination
Gateway	The IP address of the next router to the remote network
Interface	Interface through which the specified network can be reached

Table 5–5: IP ARP INFORMATION

FIELD	DESCRIPTION
IP Address	The network address that corresponds to Hardware Address
Age (min)	Age, in minutes, of the cache entry. A hyphen (-) means the address is local.
Hardware Address	LAN hardware address, a MAC address that corresponds to network address
Type	Dynamic or Static
Interface	Interface to which this address mapping has been assigned

h) MODBUS PROTOCOL

PATH: SETTINGS ⇨ PRODUCT SETUP ⇨⇩ COMMUNICATIONS ⇨⇩ MODBUS PROTOCOL

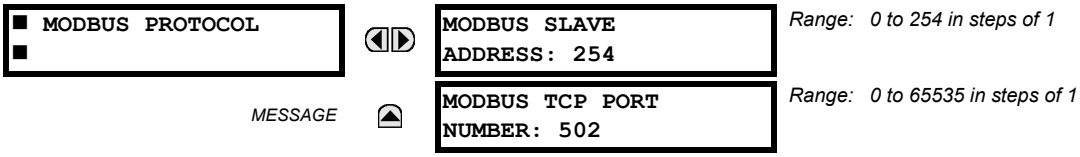

The serial communication ports utilize the Modbus protocol, unless the port is configured for DNP or IEC 60870-5-103 operation. This allows the EnerVista UR Setup software to be used on the port. The UR operates as a Modbus slave device only.

When using Modbus protocol on the RS232 port, the C70 responds regardless of the **MODBUS SLAVE ADDRESS** programmed. For the RS485 port, each device on the serial bus must have a unique slave address from 1 to 254. Address 0 and addresses from 248 and up are reserved by the Modbus protocol specification, and so their use here is not recommended. Address 0 is the broadcast address that all Modbus slave devices listen to. When **MODBUS SLAVE ADDRESS** is set to 0, the UR accepts broadcast messages, but in compliance with protocol specifications for broadcast messages, never replies. Addresses do not have to be sequential, but no two devices can have the same address or conflicts resulting in errors occur. Generally, each device added to the link should use the next higher address starting at 1. When using Modbus TCP/IP, the client must use the programmed **MODBUS SLAVE ADDRESS** value in the Unit Identifier field. See Appendix B for more information on the Modbus protocol.

Modbus over TCP/IP can also be used on any of the Ethernet ports. The listening TCP port 502 is reserved for Modbus communications, and only in exceptional cases when **MODBUS TCP PORT NUMBER** is set to any other port. The **MODBUS TCP PORT NUMBER** setting sets the TCP port used by Modbus on Ethernet. A **MODBUS TCP PORT NUMBER** of 0 disables Modbus over TCP/IP, meaning closes the Modbus TCP port. When it is set to 0, use the front panel or serial port to communicate with the relay.

NOTE

When a 0 value is involved in a change, the changes to the **MODBUS TCP PORT NUMBER** setting take effect when the C70 is restarted.

Do not set more than one protocol to the same TCP/UDP port number, as this results in unreliable operation of those protocols.

i) PROTOCOL

The Protocol menu setting allows selection of one of the following protocols: DNP 3.0, IEC60870-104, or IEC60870-103. For any change to take effect, restart the unit.

The table shows which of DNP 3.0, IEC 60870-5-104, IEC 60870-5-103, and IEC 61850 protocols are operational on the RS232, RS485, and Ethernet ports. It shows all possible combinations of the **PROTOCOL** and **DNP CHANNEL 1(2) PORT** settings.

Table 5–6: PORT AND PROTOCOL COMBINATIONS

PROTOCOL SETTING	DNP CHANNEL 1(2) PORT SETTINGS	RS232	RS485	ETHERNET
DNP	Channel 1: Eth TCP Channel 2: Eth TCP	Modbus	Modbus	DNP, Modbus, IEC 61850
	Channel 1: Eth TCP Channel 2: none	Modbus	Modbus	DNP, Modbus, IEC 61850
	Channel 1: none Channel 2: Eth TCP	Modbus	Modbus	DNP, Modbus, IEC 61850
	Channel 1: Eth UDP Channel 2: none	Modbus	Modbus	DNP, Modbus, IEC 61850
	Channel 1: Eth TCP Channel 2: RS485	Modbus	DNP	DNP, Modbus, IEC 61850
	Channel 1: Eth TCP Channel 2: RS232	DNP	Modbus	DNP, Modbus, IEC 61850
	Channel 1: Eth UDP Channel 2: RS485	Modbus	DNP	DNP, Modbus, IEC 61850
	Channel 1: Eth UDP Channel 2: RS232	DNP	Modbus	DNP, Modbus, IEC 61850
	Channel 1: RS485 Channel 2: Eth TCP	Modbus	DNP	DNP, Modbus, IEC 61850
	Channel 1: RS232 Channel 2: Eth TCP	DNP	Modbus	DNP, Modbus, IEC 61850
	Channel 1: RS485 Channel 2: RS232	DNP	DNP	Modbus, IEC 61850
	Channel 1: RS232 Channel 2: RS485	DNP	DNP	Modbus, IEC 61850
	Channel 1: RS485 Channel 2: none	Modbus	DNP	Modbus, IEC 61850
IEC 104		Modbus	Modbus	IEC 104, Modbus, IEC 61850
IEC 103		Modbus	IEC 103	Modbus, IEC 61850

j) DNP PROTOCOL

PATH: SETTINGS ⇨ PRODUCT SETUP ⇨⇩ COMMUNICATIONS ⇨⇩ DNP PROTOCOL

■ DNP PROTOCOL ■	◀▶	■ DNP CHANNELS ■
		Range: see sub-menu below
	MESSAGE ▲▼	DNP ADDRESS: 1
		Range: 0 to 65519 in steps of 1
	MESSAGE ▲▼	■ DNP NETWORK ■ CLIENT ADDRESSES
		Range: see sub-menu below
	MESSAGE ▲▼	DNP TCP/UDP PORT NUMBER: 20000
		Range: 0 to 65535 in steps of 1
	MESSAGE ▲▼	DNP UNSOL RESPONSE FUNCTION: Disabled
		Range: Enabled, Disabled
	MESSAGE ▲▼	DNP UNSOL RESPONSE TIMEOUT: 5 s
		Range: 0 to 60 s in steps of 1
	MESSAGE ▲▼	DNP UNSOL RESPONSE MAX RETRIES: 10
		Range: 1 to 255 in steps of 1
	MESSAGE ▲▼	DNP UNSOL RESPONSE DEST ADDRESS: 1
		Range: 0 to 65519 in steps of 1
	MESSAGE ▲▼	DNP CURRENT SCALE FACTOR: 1
		Range: 0.001, 0.01. 0.1, 1, 10, 100, 1000, 10000, 100000
	MESSAGE ▲▼	DNP VOLTAGE SCALE FACTOR: 1
		Range: 0.001, 0.01. 0.1, 1, 10, 100, 1000, 10000, 100000
	MESSAGE ▲▼	DNP POWER SCALE FACTOR: 1
		Range: 0.001, 0.01. 0.1, 1, 10, 100, 1000, 10000, 100000
	MESSAGE ▲▼	DNP ENERGY SCALE FACTOR: 1
		Range: 0.001, 0.01. 0.1, 1, 10, 100, 1000, 10000, 100000
	MESSAGE ▲▼	DNP PF SCALE FACTOR: 1
		Range: 0.001, 0.01. 0.1, 1, 10, 100, 1000, 10000, 100000
	MESSAGE ▲▼	DNP OTHER SCALE FACTOR: 1
		Range: 0.001, 0.01. 0.1, 1, 10, 100, 1000, 10000, 100000
	MESSAGE ▲▼	DNP CURRENT DEFAULT DEADBAND: 30000
		Range: 0 to 100000000 in steps of 1
	MESSAGE ▲▼	DNP VOLTAGE DEFAULT DEADBAND: 30000
		Range: 0 to 100000000 in steps of 1
	MESSAGE ▲▼	DNP POWER DEFAULT DEADBAND: 30000
		Range: 0 to 100000000 in steps of 1
	MESSAGE ▲▼	DNP ENERGY DEFAULT DEADBAND: 30000
		Range: 0 to 100000000 in steps of 1
	MESSAGE ▲▼	DNP PF DEFAULT DEADBAND: 30000
		Range: 0 to 100000000 in steps of 1
	MESSAGE ▲▼	DNP OTHER DEFAULT DEADBAND: 30000
		Range: 0 to 100000000 in steps of 1
	MESSAGE ▲▼	DNP TIME SYNC IIN PERIOD: 1440 min
		Range: 1 to 10080 min. in steps of 1

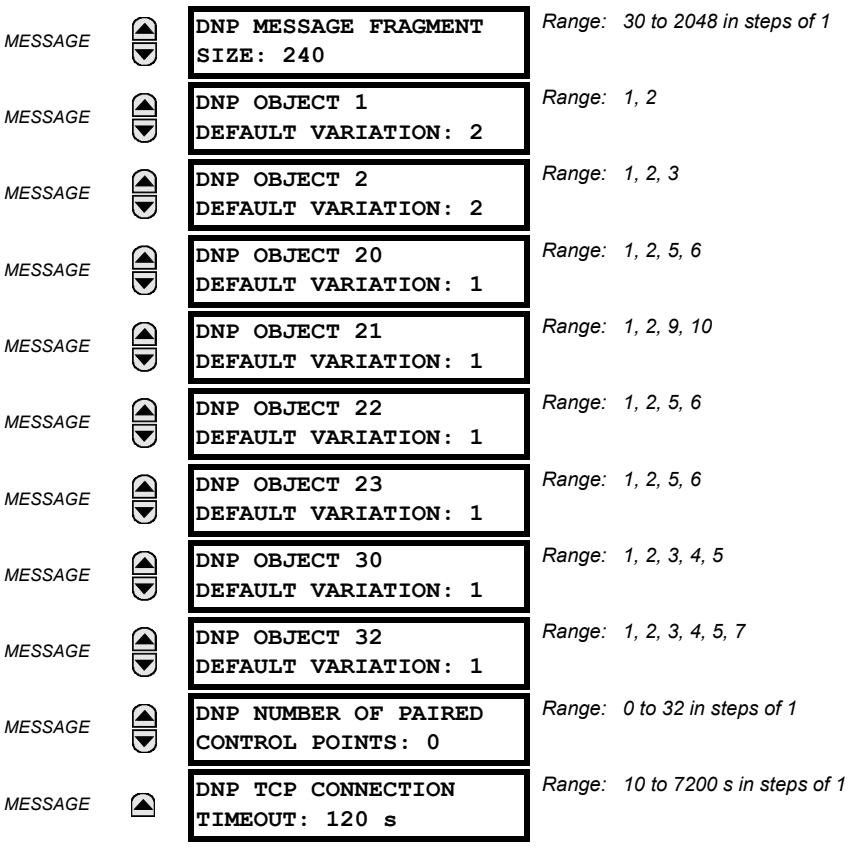

The C70 supports the Distributed Network Protocol (DNP) version 3.0. DNP is enabled when the **SETTINGS ⇨ PRODUCT SETUP ⇨⇩ COMMUNICATIONS ⇨ PROTOCOL** setting is set to DNP 3.0. The C70 can be used as a DNP slave device connected to multiple DNP masters (usually an RTU or a SCADA master station). Since the C70 maintains two sets of DNP data change buffers and connection information, two DNP masters can actively communicate with the C70 at one time.

NOTE For any change to DNP settings, restart the relay.

The DNP Channels sub-menu is shown below.

PATH: SETTINGS ⇨ PRODUCT SETUP ⇨⇩ COMMUNICATIONS ⇨⇩ DNP PROTOCOL ⇨ DNP CHANNELS

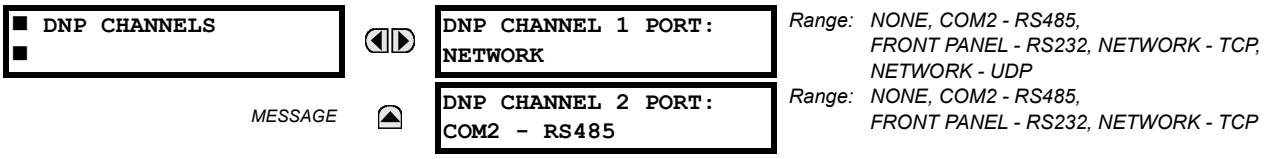

The **DNP CHANNEL 1 PORT** and **DNP CHANNEL 2 PORT** settings select the communications port assigned to the DNP protocol for each channel. Once DNP is assigned to a serial port, DNP is the only protocol running on that port; Modbus or IEC 60870-5-103 are disabled. If DNP is assigned to RS485, the protocol must be set to DNP on the serial port configuration as well, for the change to take effect. When the **DNP CHANNEL 1(2) PORT** setting is set to "Network - TCP," the channel 1(2) DNP protocol can be used over TCP/IP on the Ethernet ports. When the **DNP CHANNEL 1 PORT** setting is set to "Network - UDP," the channel 1 DNP protocol can be used over UDP/IP on the Ethernet ports. See the DNP appendix for information on the DNP protocol.

NOTE Do not set more than one protocol to the same TCP/UDP port number, as this results in unreliable operation of those protocols.

The **DNP ADDRESS** setting is the DNP slave address. This number identifies the C70 on a DNP communications link. Each DNP slave should be assigned a unique address.

The C70 can specify a maximum of five clients for its DNP connections. These are IP addresses for the controllers to which the C70 can connect. The settings in this sub-menu are shown below.

PATH: SETTINGS ⇨ PRODUCT SETUP ⇨⇩ COMMUNICATIONS ⇨⇩ DNP PROTOCOL ⇨ DNP NETWORK CLIENT ADDRESSES

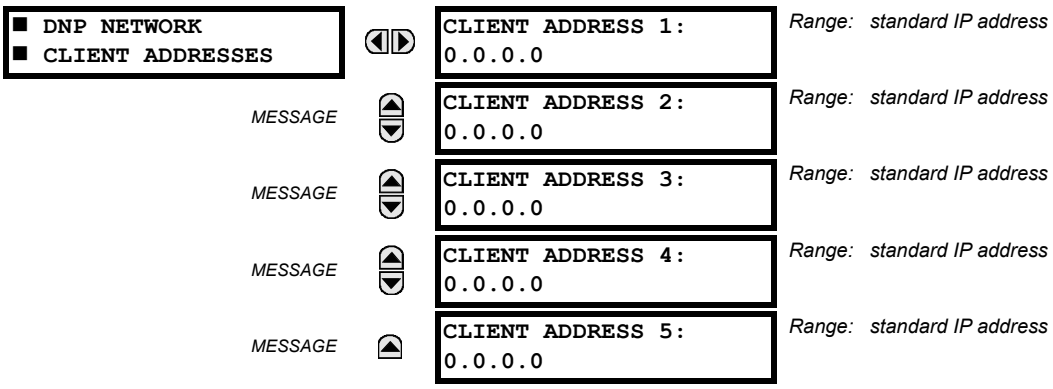

The **DNP TCP/UDP PORT NUMBER** is for normal DNP operation. To close the port, set the port number to 0.

The **DNP UNSOL RESPONSE FUNCTION** should be "Disabled" for RS485 applications since there is no collision avoidance mechanism. The **DNP UNSOL RESPONSE TIMEOUT** sets the time the C70 waits for a DNP master to confirm an unsolicited response. The **DNP UNSOL RESPONSE MAX RETRIES** setting determines the number of times the C70 retransmits an unsolicited response without receiving confirmation from the master; a value of "255" allows infinite re-tries. The **DNP UNSOL RESPONSE DEST ADDRESS** is the DNP address to which all unsolicited responses are sent. The IP address to which solicited responses are sent is determined by the C70 from the current TCP connection or the most recent UDP message.

The DNP scale factor settings are numbers used to scale analog input point values. These settings group the C70 analog input data into the following types: current, voltage, power, energy, power factor, and other. Each setting represents the scale factor for all analog input points of that type. For example, if the **DNP VOLTAGE SCALE FACTOR** setting is set to "1000", all DNP analog input points that are voltages will be returned with values 1000 times smaller (for example, a value of 72000 V on the C70 will be returned as 72). These settings are useful when analog input values must be adjusted to fit within certain ranges in DNP masters. Note that a scale factor of 0.1 is equivalent to a multiplier of 10 (that is, the value will be 10 times larger).

The **DNP DEFAULT DEADBAND** settings determine when to trigger unsolicited responses containing analog input data. These settings group the C70 analog input data into the following types: current, voltage, power, energy, power factor, and other. Each setting represents the default deadband value for all analog input points of that type. For example, to trigger unsolicited responses from the C70 when any current values change by 15 A, the **DNP CURRENT DEFAULT DEADBAND** setting should be set to "15". Note that these settings are the deadband default values. DNP object 34 points can be used to change deadband values, from the default, for each individual DNP analog input point.

NOTE

The C70 relay does not support energy metering. As such, the **DNP ENERGY SCALE FACTOR** and **DNP ENERGY DEFAULT DEADBAND** settings are not applicable.

The **DNP TIME SYNC IIN PERIOD** setting determines how often the Need Time Internal Indication (IIN) bit is set by the C70. Changing this time allows the DNP master to send time synchronization commands more or less often, as required.

The **DNP MESSAGE FRAGMENT SIZE** setting determines the size, in bytes, at which message fragmentation occurs. Large fragment sizes allow for more efficient throughput; smaller fragment sizes cause more application layer confirmations to be necessary which can provide for more robust data transfer over noisy communication channels.

NOTE

Check the "DNP Points Lists" C70 web page to view the analog inputs and/or binary inputs points lists. This page can be viewed with a web browser by entering the IP address of the UR Ethernet port employed to access the C70 "Main Menu", then by selecting the "Device Information Menu" > "DNP Points Lists" menu item.

The **DNP OBJECT 1 DEFAULT VARIATION** to **DNP OBJECT 32 DEFAULT VARIATION** settings allow the user to select the DNP default variation number for object types 1, 2, 20, 21, 22, 23, 30, and 32. The default variation refers to the variation response when variation 0 is requested and/or in class 0, 1, 2, or 3 scans. See the DNP Implementation section in the DNP appendix.

The DNP binary outputs typically map one-to-one to IED data points. That is, each DNP binary output controls a single physical or virtual control point in an IED. In the C70 relay, DNP binary outputs are mapped to virtual inputs. However, some legacy DNP implementations use a mapping of one DNP binary output to two physical or virtual control points to support the concept of trip/close (for circuit breakers) or raise/lower (for tap changers) using a single control point. That is, the DNP master can operate a single point for both trip and close, or raise and lower, operations. The C70 can be configured to support paired control points, with each paired control point operating two virtual inputs. The **DNP NUMBER OF PAIRED CONTROL POINTS** setting allows configuration of from 0 to 32 binary output paired controls. Points not configured as paired operate on a one-to-one basis.

The **DNP TCP CONNECTION TIMEOUT** setting specifies a time delay for the detection of dead network TCP connections. If there is no data traffic on a DNP TCP connection for greater than the time specified by this setting, the connection will be aborted by the C70. This frees up the connection to be re-used by a client.

NOTE

For any change to DNP settings, restart the relay.

k) DNP / IEC 60870-5-104 POINT LISTS

PATH: SETTINGS ⇨ PRODUCT SETUP ⇨⇩ COMMUNICATIONS ⇨⇩ DNP / IEC104 POINT LISTS

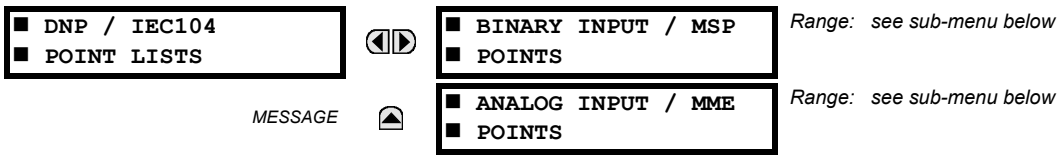

Up to 256 binary and up to 256 analog input points for the DNP protocol, or the MSP and MME points for IEC 60870-5-104 protocol, can be configured. The value for each point is user-programmable and can be configured by assigning FlexLogic operands for binary inputs / MSP points or FlexAnalog parameters for analog inputs / MME points.

The menu for the binary input points (DNP) or MSP points (IEC 60870-5-104) is shown below.

PATH: SETTINGS ⇨ PRODUCT SETUP ⇨⇩ COMMUNICATIONS ⇨⇩ DNP / IEC104 POINT LISTS ⇨ BINARY INPUT / MSP POINTS

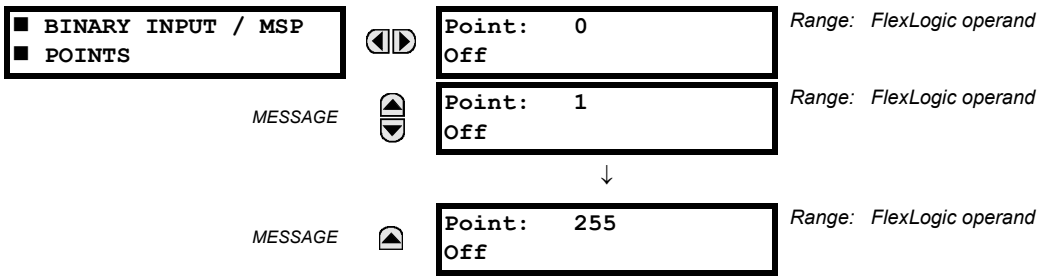

Up to 256 binary input points can be configured for the DNP or IEC 60870-5-104 protocols. The points are configured by assigning an appropriate FlexLogic operand. See the Introduction to FlexLogic section in this chapter for the full range of assignable operands.

The menu for the analog input points (DNP) or MME points (IEC 60870-5-104) is shown below.

PATH: SETTINGS ⇨ PRODUCT SETUP ⇨⇩ COMMUNICATIONS ⇨⇩ DNP / IEC104 POINT LISTS ⇨⇩ ANALOG INPUT / MME POINTS

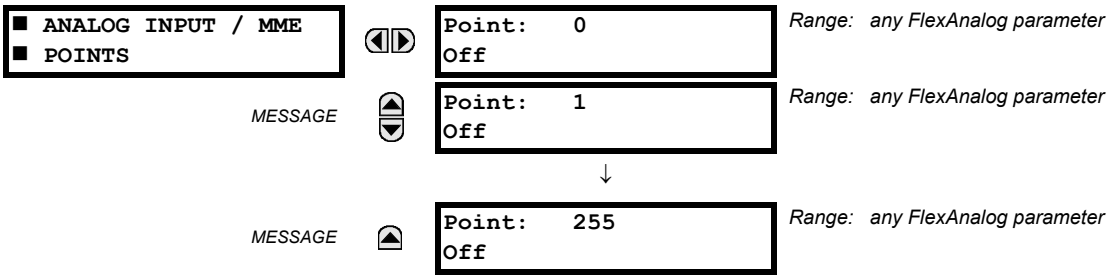

Up to 256 analog input points can be configured for the DNP or IEC 60870-5-104 protocols. The analog point list is configured by assigning an appropriate FlexAnalog parameter to each point. Refer to Appendix A: FlexAnalog Parameters for the full range of assignable parameters.

NOTE

The DNP / IEC 60870-5-104 point lists always begin with point 0 and end at the first "Off" value. Since DNP / IEC 60870-5-104 point lists must be in one continuous block, any points assigned after the first "Off" point are ignored.

Changes to the DNP / IEC 60870-5-104 point lists take effect when the C70 is restarted.

l) IEC 61850 PROTOCOL

PATH: SETTINGS ⇨ PRODUCT SETUP ⇨⇩ COMMUNICATIONS ⇨⇩ IEC 61850 PROTOCOL

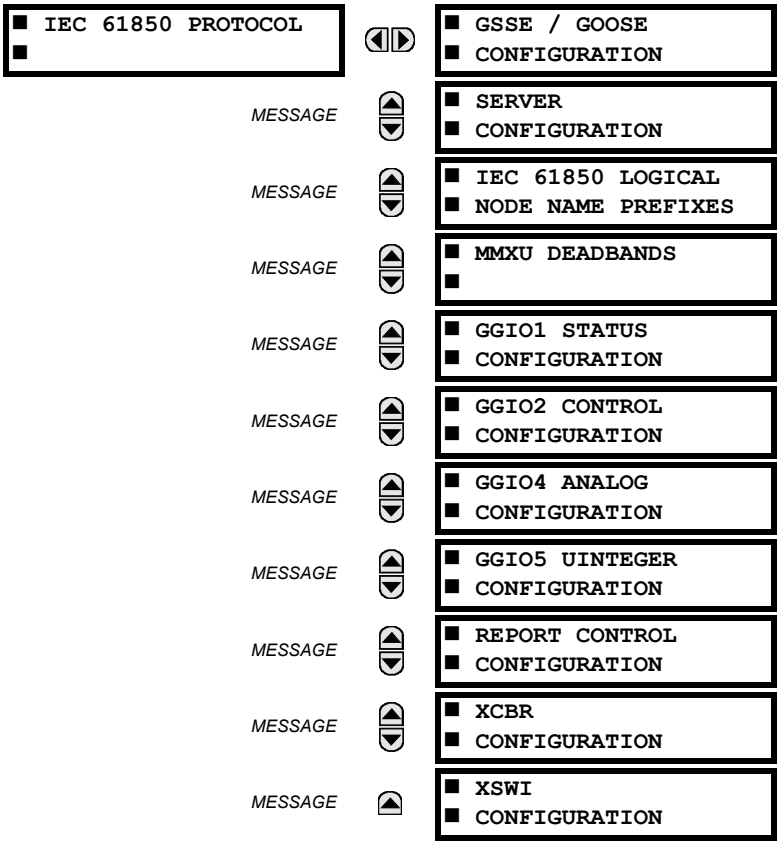

SOFTWARE OPTION

The C70 Capacitor Bank Protection and Control System is provided with optional IEC 61850 communications capability. This feature is specified as a software option at the time of ordering. See the Order Codes section in chapter 2 for details.

NOTE

IEC 61850 messaging can form part of protection schemes. Consider 61850 settings with the same criticality as protection element settings. To ensure reliable performance of protection schemes utilizing 61850 messaging, it can be desirable to route 61850 traffic on a separate port from SCADA communications, or to use redundant, independent ports, and a high speed network recovery method, such as PRP.

The C70 supports the Manufacturing Message Specification (MMS) protocol as specified by IEC 61850. MMS is supported over two protocol stacks: TCP/IP over Ethernet. The C70 operates as an IEC 61850 server. The Remote Inputs and Outputs section in this chapter describe the peer-to-peer GSSE/GOOSE message scheme.

The EnerVista software includes an interface that is compatible with firmware versions 5.0 to 7.2 to configure subscribers. Use the Simplified GOOSE Configurator in the Offline Window area.

The GSSE/GOOSE configuration main menu is divided into two areas: transmission and reception.

PATH: SETTINGS ⇨ PRODUCT SETUP ⇨⇩ COMMUNICATIONS ⇨⇩ IEC 61850 PROTOCOL ⇨ GSSE/GOOSE CONFIGURATION

```
■ GSSE / GOOSE
■ CONFIGURATION
```

```
■ TRANSMISSION
■
```

MESSAGE

```
■ RECEPTION
■
```

The main transmission menu is shown below:

PATH: SETTINGS ⇨ PRODUCT SETUP ⇨⇩ COMMUNICATIONS ⇨⇩ IEC 61850 PROTOCOL ⇨ GSSE/GOOSE CONFIGURATION ⇨ TRANSMISSION

```
■ TRANSMISSION
■
```

```
■ GENERAL
■
```

MESSAGE

```
■ GSSE
■
```

MESSAGE

```
■ FIXED GOOSE
■
```

MESSAGE

```
■ CONFIGURABLE GOOSE
■
```

The general transmission settings are shown below:

PATH: SETTINGS ⇨ PRODUCT SETUP ⇨⇩ COMMUNICATIONS ⇨⇩ IEC 61850 PROTOCOL ⇨ GSSE/GOOSE CONFIGURATION ⇨ TRANSMISSION ⇨ GENERAL

```
■ GENERAL
■
```

```
DEFAULT GSSE/GOOSE
UPDATE TIME: 60 s
```

Range: 1 to 60 s in steps of 1

The **DEFAULT GSSE/GOOSE UPDATE TIME** sets the time between GSSE or GOOSE messages when there are no remote output state changes to be sent. When remote output data changes, GSSE or GOOSE messages are sent immediately. This setting controls the steady-state *heartbeat* time interval.

The **DEFAULT GSSE/GOOSE UPDATE TIME** setting is applicable to GSSE, fixed C70 GOOSE, and configurable GOOSE.

The GSSE settings are shown below:

PATH: SETTINGS ⇨ PRODUCT SETUP ⇨⇩ COMMUNICATIONS ⇨⇩ IEC 61850 PROTOCOL ⇨ GSSE/GOOSE CONFIGURATION ⇨ TRANSMISSION ⇨⇩ GSEE

```
■ GSSE
■
```

```
GSSE FUNCTION:
 Enabled
```

Range: Enabled, Disabled

MESSAGE

```
GSSE ID:
GSSEOut
```

Range: 65-character ASCII string

MESSAGE

```
DESTINATION MAC:
000000000000
```

Range: standard MAC address

These settings are applicable to GSSE only. If the fixed GOOSE function is enabled, GSSE messages are not transmitted.

The **GSSE ID** setting represents the IEC 61850 GSSE application ID name string sent as part of each GSSE message. This string identifies the GSSE message to the receiving device. In C70 releases previous to 5.0x, this name string was represented by the **RELAY NAME** setting.

The fixed GOOSE settings are shown below:

PATH: SETTINGS ⇨ PRODUCT SETUP ⇨⇩ COMMUNICATIONS ⇨⇩ IEC 61850 PROTOCOL ⇨ GSSE/GOOSE CONFIGURATION ⇨ TRANSMISSION ⇨⇩ FIXED GOOSE

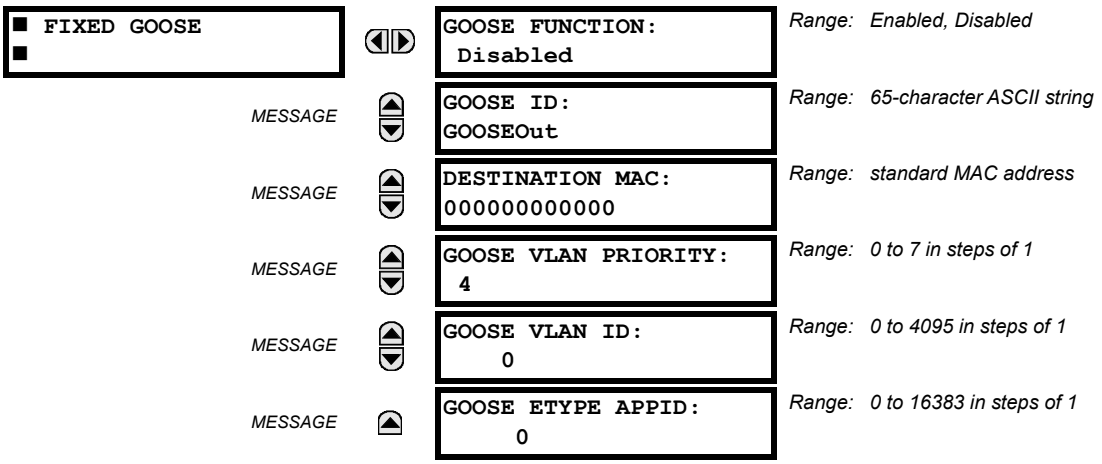

These settings are applicable to fixed (DNA/UserSt) GOOSE only.

The **GOOSE ID** setting represents the IEC 61850 GOOSE application ID (GoID) name string sent as part of each GOOSE message. This string identifies the GOOSE message to the receiving device. In revisions previous to 5.0x, this name string was represented by the **RELAY NAME** setting.

The **DESTINATION MAC** setting allows the destination Ethernet MAC address to be set. This address must be a multicast address; the least significant bit of the first byte must be set. In C70 releases previous to 5.0x, the destination Ethernet MAC address was determined automatically by taking the sending MAC address (that is, the unique, local MAC address of the C70) and setting the multicast bit.

The **GOOSE VLAN PRIORITY** setting indicates the Ethernet priority of GOOSE messages. This allows GOOSE messages to have higher priority than other Ethernet data. The **GOOSE ETYPE APPID** setting allows the selection of a specific application ID for each GOOSE sending device. This value can be left at its default if the feature is not required. Both the **GOOSE VLAN PRIORITY** and **GOOSE ETYPE APPID** settings are required by IEC 61850.

The configurable GOOSE settings are shown below.

PATH: SETTINGS ⇨ PRODUCT SETUP ⇨⇩ COMMUNICATIONS ⇨⇩ IEC 61850 PROTOCOL ⇨ GSSE/GOOSE CONFIGURATION ⇨ TRANSMISSION ⇨⇩ CONFIGURABLE GOOSE ⇨ CONFIGURABLE GOOSE 1(8)

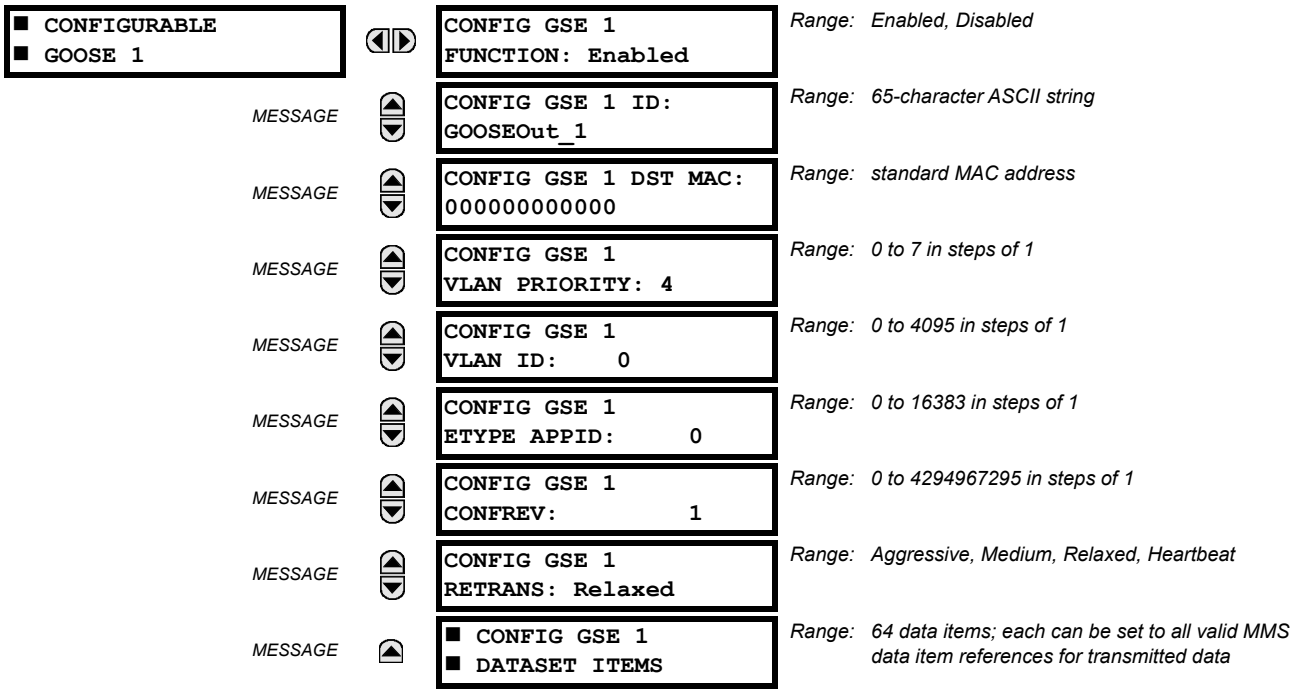

The configurable GOOSE settings allow the C70 to be configured to transmit a number of different datasets within IEC 61850 GOOSE messages. Up to eight different configurable datasets can be configured and transmitted. This is useful for intercommunication between C70 IEDs and devices from other manufacturers that support IEC 61850.

The configurable GOOSE feature allows for the configuration of the datasets to be transmitted or received from the C70. The C70 supports the configuration of eight transmission and reception datasets, allowing for the optimization of data transfer between devices.

Items programmed for dataset 1 and 2 will have changes in their status transmitted as soon as the change is detected. Datasets 1 and 2 should be used for high-speed transmission of data that is required for applications such as transfer tripping, blocking, and breaker fail initiate. At least one digital status value needs to be configured in the required dataset to enable transmission of configured data. Configuring analog data only to dataset 1 or 2 will not activate transmission.

Items programmed for datasets 3 through 8 will have changes in their status transmitted at a maximum rate of every 100 ms. Datasets 3 through 8 will regularly analyze each data item configured within them every 100 ms to identify if any changes have been made. If any changes in the data items are detected, these changes will be transmitted through a GOOSE message. If there are no changes detected during this 100 ms period, no GOOSE message will be sent.

For all datasets 1 through 8, the integrity GOOSE message will still continue to be sent at the pre-configured rate even if no changes in the data items are detected.

The GOOSE functionality was enhanced to prevent the relay from flooding a communications network with GOOSE messages due to an oscillation being created that is triggering a message.

The C70 has the ability of detecting if a data item in one of the GOOSE datasets is erroneously oscillating. This can be caused by events such as errors in logic programming, inputs improperly being asserted and de-asserted, or failed station components. If erroneously oscillation is detected, the C70 will stop sending GOOSE messages from the dataset for a minimum period of one second. Should the oscillation persist after the one second time-out period, the C70 will continue to block transmission of the dataset. The C70 will assert the **MAINTENANCE ALERT: GGIO Ind XXX oscill** self-test error message on the front panel display, where **XXX** denotes the data item detected as oscillating.

For versions 5.70 and higher, the C70 supports four retransmission schemes: aggressive, medium, relaxed, and heartbeat. The aggressive scheme is only supported in fast type 1A GOOSE messages (GOOSEOut 1 and GOOSEOut 2). For slow GOOSE messages (GOOSEOut 3 to GOOSEOut 8) the aggressive scheme is the same as the medium scheme.

The table shows details about each scheme. Times are maximum values. Retransmitted messages can occur faster than the times listed.

Table 5–7: GOOSE RETRANSMISSION SCHEMES

SCHEME	SQ NUM	TIME FROM THE EVENT	TIME BETWEEN MESSAGES	COMMENT	TIME ALLOWED TO LIVE IN MESSAGE
Aggressive	0	0 ms	0 ms	Event	2000 ms
	1	4 ms	4 ms	T1	2000 ms
	2	8 ms	4 ms	T1	2000 ms
	3	16 ms	8 ms	T2	Heartbeat * 4.5
	4	Heartbeat	Heartbeat	T0	Heartbeat * 4.5
	5	Heartbeat	Heartbeat	T0	Heartbeat * 4.5
Medium	0	0 ms	0 ms	Event	2000 ms
	1	16 ms	16 ms	T1	2000 ms
	2	32 ms	16 ms	T1	2000 ms
	3	64 ms	32 ms	T2	Heartbeat * 4.5
	4	Heartbeat	Heartbeat	T0	Heartbeat * 4.5
	5	Heartbeat	Heartbeat	T0	Heartbeat * 4.5
Relaxed	0	0 ms	0 ms	Event	2000 ms
	1	100 ms	100 ms	T1	2000 ms
	2	200 ms	100 ms	T1	2000 ms
	3	700 ms	500 ms	T2	Heartbeat * 4.5
	4	Heartbeat	Heartbeat	T0	Heartbeat * 4.5
	5	Heartbeat	Heartbeat	T0	Heartbeat * 4.5
Heartbeat	0	0 ms	0 ms	Event	2000 ms
	1	Heartbeat	Heartbeat	T1	2000 ms
	2	Heartbeat	Heartbeat	T1	2000 ms
	3	Heartbeat	Heartbeat	T2	Heartbeat * 4.5
	4	Heartbeat	Heartbeat	T0	Heartbeat * 4.5
	5	Heartbeat	Heartbeat	T0	Heartbeat * 4.5

The configurable GOOSE feature is recommended for applications that require GOOSE data transfer between UR-series IEDs and devices from other manufacturers. Fixed GOOSE is recommended for applications that require GOOSE data transfer between UR-series IEDs.

IEC 61850 GOOSE messaging contains a number of configurable parameters, all of which must be correct to achieve the successful transfer of data. It is critical that the configured datasets at the transmission and reception devices are an exact match in terms of data structure, and that the GOOSE addresses and name strings match exactly. Manual configuration is possible, but third-party substation configuration software may be used to automate the process. The EnerVista UR Setup software can produce IEC 61850 ICD files and import IEC 61850 SCD files produced by a substation configurator (as outlined in the IEC 61850 appendix).

The following example illustrates the configuration required to transfer IEC 61850 data items between two devices. The general steps required for transmission configuration are:

1. Configure the transmission dataset.
2. Configure the GOOSE service settings.
3. Configure the data.

The general steps required for reception configuration are:

1. Configure the reception dataset.
2. Configure the GOOSE service settings.
3. Configure the data.

This example shows how to configure the transmission and reception of three IEC 61850 data items: a single point status value, its associated quality flags, and a floating point analog value.

The following procedure illustrates the transmission configuration.

1. Configure the transmission dataset by making the following changes in the **PRODUCT SETUP** ⇨⇩ **COMMUNICATION** ⇨⇩ **IEC 61850 PROTOCOL** ⇨ **GSSE/GOOSE CONFIGURATION** ⇨ **TRANSMISSION** ⇨⇩ **CONFIGURABLE GOOSE** ⇨ **CONFIGURABLE GOOSE 1** ⇨⇩ **CONFIG GSE 1 DATASET ITEMS** settings menu:
   - Set **ITEM 1** to “GGIO1.ST.Ind1.q” to indicate quality flags for GGIO1 status indication 1.
   - Set **ITEM 2** to “GGIO1.ST.Ind1.stVal” to indicate the status value for GGIO1 status indication 1.
   - Set **ITEM 3** to “MMXU1.MX.Hz.mag.f” to indicate the analog frequency magnitude for MMXU1 (the metered frequency for SRC1).

   The transmission dataset now contains a quality flag, a single point status Boolean value, and a floating point analog value. The reception dataset on the receiving device must exactly match this structure.
2. Configure the GOOSE service settings by making the following changes in the **PRODUCT SETUP** ⇨⇩ **COMMUNICATION** ⇨⇩ **IEC 61850 PROTOCOL** ⇨ **GSSE/GOOSE CONFIGURATION** ⇨ **TRANSMISSION** ⇨⇩ **CONFIGURABLE GOOSE** ⇨ **CONFIGURABLE GOOSE 1** settings menu:
   - Set **CONFIG GSE 1 FUNCTION** to “Enabled”.
   - Set **CONFIG GSE 1 ID** to an appropriate descriptive string (the default value is “GOOSEOut_1”).
   - Set **CONFIG GSE 1 DST MAC** to a multicast address (for example, 01 00 00 12 34 56).
   - Set the **CONFIG GSE 1 VLAN PRIORITY**; the default value of “4” is OK for this example.
   - Set the **CONFIG GSE 1 VLAN ID** value; the default value is “0”, but some switches may require this value to be “1”.
   - Set the **CONFIG GSE 1 ETYPE APPID** value. This setting represents the ETHERTYPE application ID and must match the configuration on the receiver (the default value is “0”).
   - Set the **CONFIG GSE 1 CONFREV** value. This value changes automatically as described in IEC 61850 part 7-2. For this example it can be left at its default value.
3. Configure the data by making the following changes in the **PRODUCT SETUP** ⇨⇩ **COMMUNICATION** ⇨⇩ **IEC 61850 PROTOCOL** ⇨ **GGIO1 STATUS CONFIGURATION** settings menu:
   - Set **GGIO1 INDICATION 1** to a FlexLogic operand used to provide the status of GGIO1.ST.Ind1.stVal (for example, a contact input, virtual input, a protection element status, etc.).
4. Configure the MMXU1 Hz Deadband by making the following changes in the **PRODUCT SETUP** ⇨⇩ **COMMUNICATION** ⇨⇩ **IEC 61850 PROTOCOL** ⇨⇩ **MMXU DEADBANDS**⇨⇩ **MMXU1 DEADBANDS** settings menu:
   - Set **MMXU1 HZ DEADBAND** to “0.050%”. This will result in an update to the MMXU1.MX.mag.f analog value with a change greater than 45 mHz, from the previous MMXU1.MX.mag.f value, in the source frequency.

The C70 must be rebooted (control power removed and re-applied) before these settings take effect.

The following procedure illustrates the reception configuration.

1. Configure the reception dataset by making the following changes in the **PRODUCT SETUP** ⇨⇩ **COMMUNICATION** ⇨⇩ **IEC 61850 PROTOCOL** ⇨ **GSSE/GOOSE CONFIGURATION** ⇨⇩ **RECEPTION** ⇨⇩ **CONFIGURABLE GOOSE** ⇨ **CONFIGURABLE GOOSE 1** ⇨⇩ **CONFIG GSE 1 DATASET ITEMS** settings menu:
   - Set **ITEM 1** to “GGIO3.ST.Ind1.q” to indicate quality flags for GGIO3 status indication 1.
   - Set **ITEM 2** to “GGIO3.ST.Ind1.stVal” to indicate the status value for GGIO3 status indication 1.
   - Set **ITEM 3** to “GGIO3.MX.AnIn1.mag.f” to indicate the analog magnitude for GGIO3 analog input 1.

   The reception dataset now contains a quality flag, a single point status Boolean value, and a floating point analog value. This matches the transmission dataset configuration above.
2. Configure the GOOSE service settings by making the following changes in the **INPUTS/OUTPUTS** ⇨⇩ **REMOTE DEVICES** ⇨⇩ **REMOTE DEVICE 1** settings menu:
   - Set **REMOTE DEVICE 1 ID** to match the GOOSE ID string for the transmitting device. Enter “GOOSEOut_1”.

– Set **REMOTE DEVICE 1 ETYPE APPID** to match the ETHERTYPE application ID from the transmitting device. This is "0" in the example above.

– Set the **REMOTE DEVICE 1 DATASET** value. This value represents the dataset number in use. Since we are using configurable GOOSE 1 in this example, program this value as "GOOSEIn 1".

3. Configure the Boolean data by making the following changes in the **INPUTS/OUTPUTS ⇨⇩ REMOTE INPUTS ⇨⇩ REMOTE INPUT 1** settings menu:

   – Set **REMOTE IN 1 DEVICE** to "GOOSEOut_1".

   – Set **REMOTE IN 1 ITEM** to "Dataset Item 2". This assigns the value of the GGIO3.ST.Ind1.stVal single point status item to remote input 1.

4. Configure the analog data by making the following changes in the **INPUTS/OUTPUTS ⇨⇩ IEC 61850 GOOSE ANALOG INPUTS** settings menu:

   – Set the **IEC61850 GOOSE ANALOG INPUT 1 DEFAULT VALUE** to "60.000".

   – Enter "Hz" for the **IEC61850 GOOSE ANALOG INPUT 1 UNITS** setting.

The GOOSE analog input 1 can now be used as a FlexAnalog value in a FlexElement or in other settings. The C70 must be rebooted (control power removed and re-applied) before these settings take effect.

The value of GOOSE analog input 1 in the receiving device will be determined by the MMXU1.MX.Hz.mag.f value in the sending device. This MMXU value is determined by the source 1 frequency value and the MMXU Hz deadband setting of the sending device.

Remote input 1 can now be used in FlexLogic equations or other settings. The C70 must be rebooted (control power removed and re-applied) before these settings take effect.

The value of remote input 1 (Boolean on or off) in the receiving device will be determined by the GGIO1.ST.Ind1.stVal value in the sending device. The above settings will be automatically populated by the EnerVista UR Setup software when a complete SCD file is created by third party substation configurator software.

For intercommunication between C70 IEDs, the fixed (DNA/UserSt) dataset can be used. The DNA/UserSt dataset contains the same DNA and UserSt bit pairs that are included in GSSE messages. All GOOSE messages transmitted by the C70 (DNA/UserSt dataset and configurable datasets) use the IEC 61850 GOOSE messaging services (for example, VLAN support).

NOTE

Set the **CONFIG GSE 1 FUNCTION** function to "Disabled" when configuration changes are required. Once changes are entered, return the **CONFIG GSE 1 FUNCTION** to "Enabled" and restart the unit for changes to take effect.

PATH: SETTINGS ⇨ PRODUCT SETUP ⇨⇩ COMMUNICATIONS ⇨⇩ IEC 61850 PROTOCOL ⇨ GSSE/GOOSE CONFIGURATION ⇨ TRANSMISSION ⇨⇩ CONFIGURABLE GOOSE ⇨ CONFIGURABLE GOOSE 1(8) ⇨⇩ CONFIG GSE 1(64) DATA ITEMS

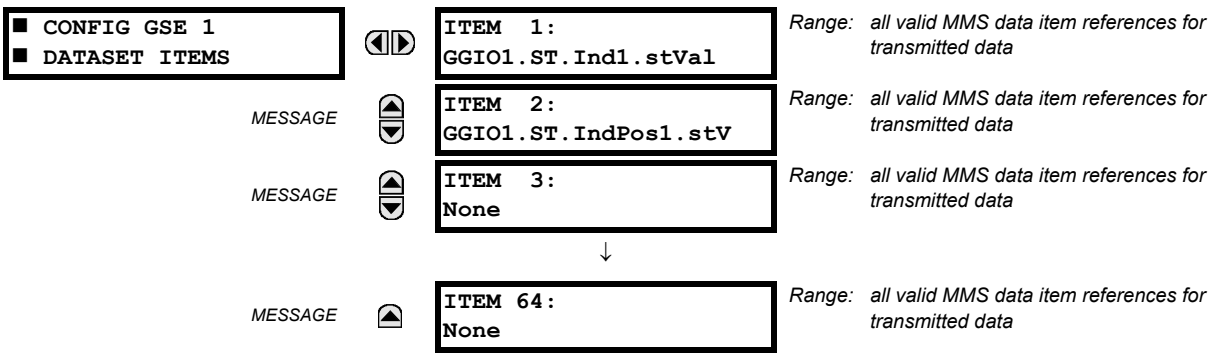

To create a configurable GOOSE dataset that contains an IEC 61850 Single Point Status indication and its associated quality flags, the following dataset items can be selected: "GGIO1.ST.Ind1.stVal" and "GGIO1.ST.Ind1.q". The C70 will then create a dataset containing these two data items. The status value for GGIO1.ST.Ind1.stVal is determined by the FlexLogic operand assigned to GGIO1 indication 1. Changes to this operand will result in the transmission of GOOSE messages containing the defined dataset.

The main reception menu is applicable to configurable GOOSE only and contains the configurable GOOSE dataset items for reception:

PATH: SETTINGS ⇨ PRODUCT SETUP ⇨⇩ COMMUNICATIONS ⇨⇩ IEC 61850 PROTOCOL ⇨ GSSE/GOOSE CONFIGURATION ⇨ RECEPTION ⇨⇩ CONFIGURABLE GOOSE ⇨ CONFIGURABLE GOOSE 1(16) ⇨⇩ CONFIG GSE 1(32) DATA ITEMS

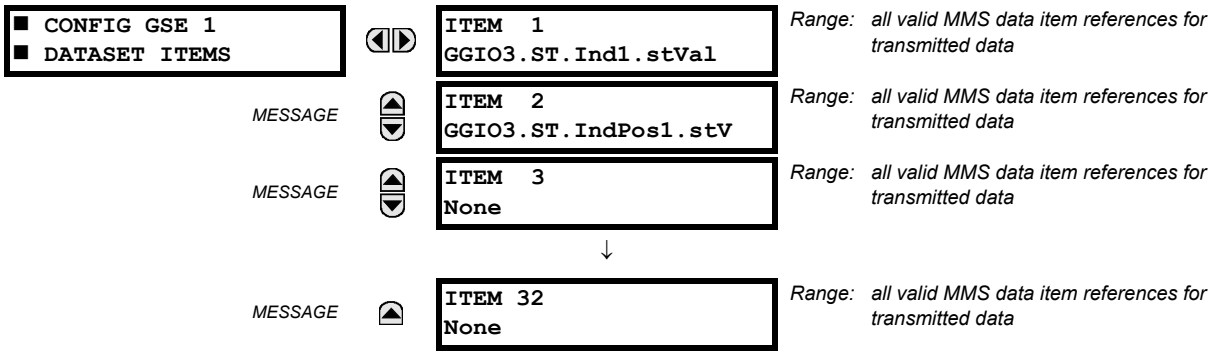

The configurable GOOSE settings allow the C70 to be configured to receive a number of different datasets within IEC 61850 GOOSE messages. Up to 16 different configurable datasets can be configured for reception. This is useful for intercommunication between C70 IEDs and devices from other manufacturers that support IEC 61850.

For intercommunication between C70 IEDs, the fixed (DNA/UserSt) dataset can be used. The DNA/UserSt dataset contains the same DNA and UserSt bit pairs that are included in GSSE messages.

To set up a C70 to receive a configurable GOOSE dataset that contains two IEC 61850 single point status indications, the following dataset items can be selected (for example, for configurable GOOSE dataset 1): “GGIO3.ST.Ind1.stVal” and “GGIO3.ST.Ind2.stVal”. The C70 will then create a dataset containing these two data items. The Boolean status values from these data items can be utilized as remote input FlexLogic operands. First, the **REMOTE DEVICE 1(16) DATASET** setting must be set to contain dataset “GOOSEIn 1” (that is, the first configurable dataset). Then **REMOTE IN 1(16) ITEM** settings must be set to “Dataset Item 1” and “Dataset Item 2”. These remote input FlexLogic operands will then change state in accordance with the status values of the data items in the configured dataset.

Double-point status values may be included in the GOOSE dataset. Received values are populated in the GGIO3.ST.IndPos1.stVal and higher items.

Floating point analog values originating from MMXU logical nodes may be included in GOOSE datasets. Deadband (non-instantaneous) values can be transmitted. Received values are used to populate the GGIO3.MX.AnIn1 and higher items. Received values are also available as FlexAnalog parameters (GOOSE analog In1 and up).

NOTE

GGIO3.MX.AnIn1 to GGIO3.MX.AnIn32 can only be used once for all 16 reception datasets.

The main menu for the IEC 61850 server configuration is shown below.

PATH: SETTINGS ⇨ PRODUCT SETUP ⇨⇩ COMMUNICATIONS ⇨⇩ IEC 61850 PROTOCOL ⇨⇩ SERVER CONFIGURATION

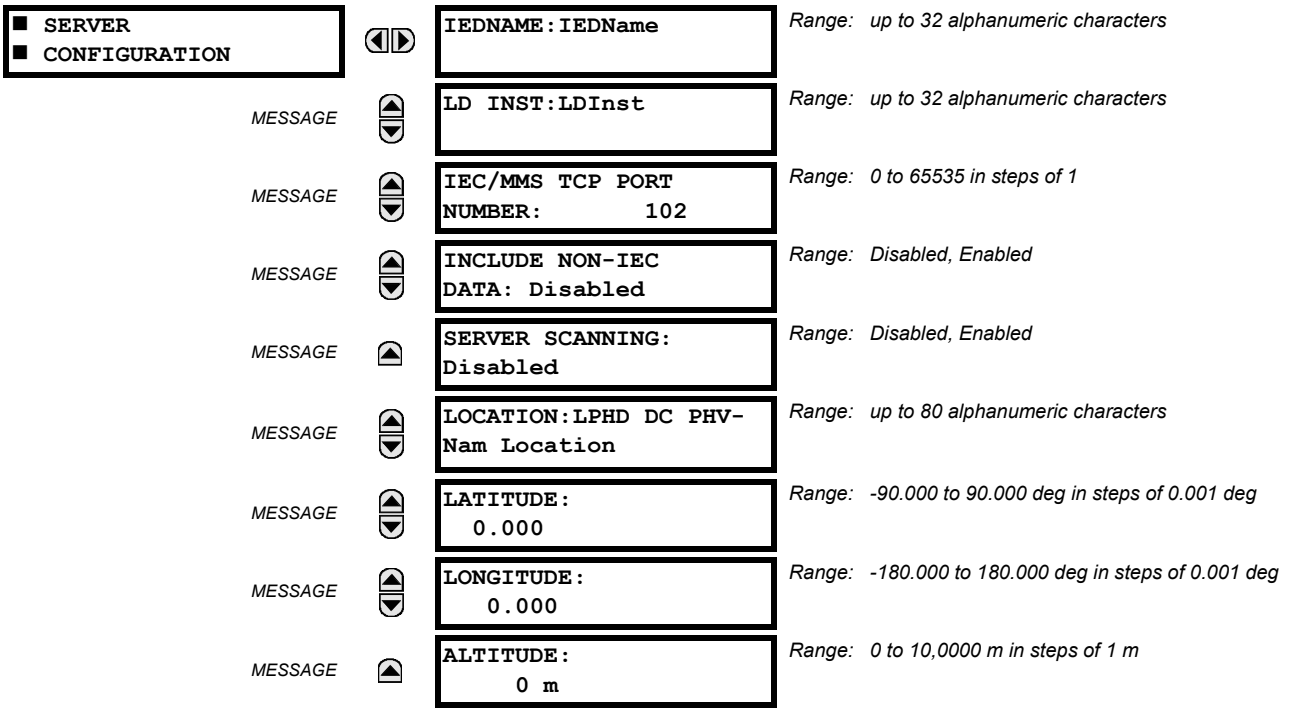

The **IEDNAME** and **LD INST** settings represent the MMS domain name (IEC 61850 logical device) where all IEC/MMS logical nodes are located. Valid characters for these values are upper and lowercase letters, numbers, and the underscore (_) character, and the first character in the string must be a letter. This conforms to the IEC 61850 standard. The **LOCATION** is a variable string and can be composed of ASCII characters. This string appears within the PhyName of the LPHD node.

The **IEC/MMS TCP PORT NUMBER** setting allows the user to change the TCP port number for MMS connections. The **INCLUDE NON-IEC DATA** setting determines whether or not the "UR" MMS domain will be available. This domain contains a large number of UR-series specific data items that are not available in the IEC 61850 logical nodes. This data does not follow the IEC 61850 naming conventions. For communications schemes that strictly follow the IEC 61850 standard, this setting should be "Disabled".

NOTE

When a 0 value is involved in a change, the changes to the **IEC/MMS TCP PORT NUMBER** setting take effect when the C70 is restarted.

Do not set more than one protocol to the same TCP/UDP port number, as this results in unreliable operation of those protocols.

The **SERVER SCANNING** feature should be set to "Disabled" when IEC 61850 client/server functionality is not required. IEC 61850 has two modes of functionality: GOOSE/GSSE inter-device communication and client/server communication. If the GOOSE/GSSE functionality is required without the IEC 61850 client server feature, then server scanning can be disabled to increase CPU resources. When server scanning is disabled, there is no updating of the IEC 61850 logical node status values in the C70. Clients are still able to connect to the server (C70 relay), but most data values are not updated. This setting does not affect GOOSE/GSSE operation.

NOTE

Changes to the **IEDNAME** setting, **LD INST** setting, and GOOSE dataset take effect when the C70 is restarted.

The main menu for the IEC 61850 logical node name prefixes is shown below.

PATH: SETTINGS ⇨ PRODUCT SETUP ⇨⇩ COMMUNICATIONS ⇨⇩ IEC 61850 PROTOCOL ⇨⇩ IEC 61850 LOGICAL NODE NAME PREFIXES

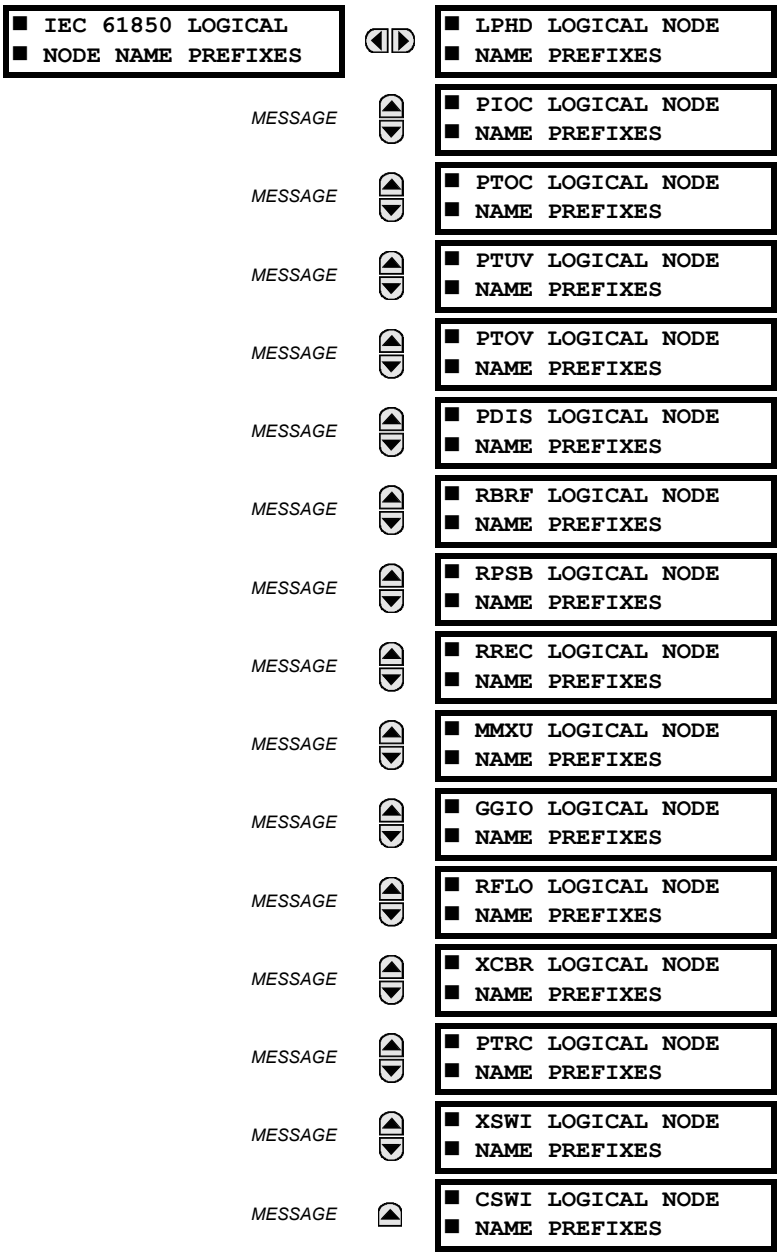

The IEC 61850 logical node name prefix settings are used to create name prefixes to uniquely identify each logical node. For example, the logical node “PTOC1” may have the name prefix “abc”. The full logical node name will then be “abcMMXU1”. Valid characters for the logical node name prefixes are upper and lowercase letters, numbers, and the underscore (_) character, and the first character in the prefix must be a letter. This conforms to the IEC 61850 standard.

Changes to the logical node prefixes will not take effect until the C70 is restarted.

The main menu for the IEC 61850 MMXU deadbands is shown below.

PATH: SETTINGS ⇨ PRODUCT SETUP ⇨⇩ COMMUNICATIONS ⇨⇩ IEC 61850 PROTOCOL ⇨⇩ MMXU DEADBANDS

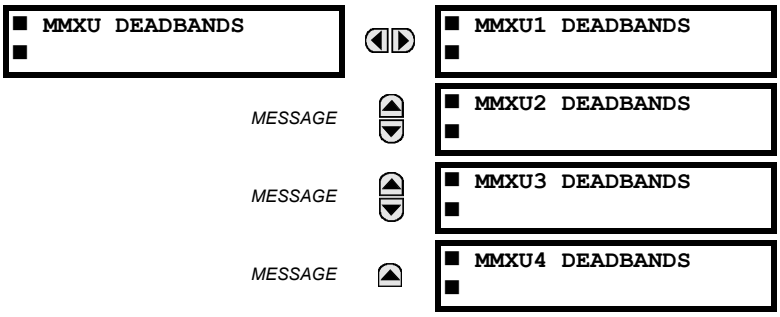

The MMXU deadband settings represent the deadband values used to determine when the update the MMXU “mag” and “cVal” values from the associated “instmag” and “instcVal” values. The “mag” and “cVal” values are used for the IEC 61850 buffered and unbuffered reports. These settings correspond to the associated “db” data items in the CF functional constraint of the MMXU logical node, as per the IEC 61850 standard. According to IEC 61850-7-3, the db value “shall represent the percentage of difference between the maximum and minimum in units of 0.001%”. Thus, it is important to know the maximum value for each MMXU measured quantity, since this represents the 100.00% value for the deadband.

The minimum value for all quantities is 0; the maximum values are as follows:

- phase current: 46 × phase CT primary setting
- neutral current: 46 × ground CT primary setting
- voltage: 275 × VT ratio setting
- power (real, reactive, and apparent): 46 × phase CT primary setting × 275 × VT ratio setting
- frequency: 90 Hz
- power factor: 2

The GGIO1 status configuration points are shown below:

PATH: SETTINGS ⇨ PRODUCT SETUP ⇨⇩ COMMUNICATIONS ⇨⇩ IEC 61850 PROTOCOL ⇨⇩ GGIO1 STATUS CONFIGURATION

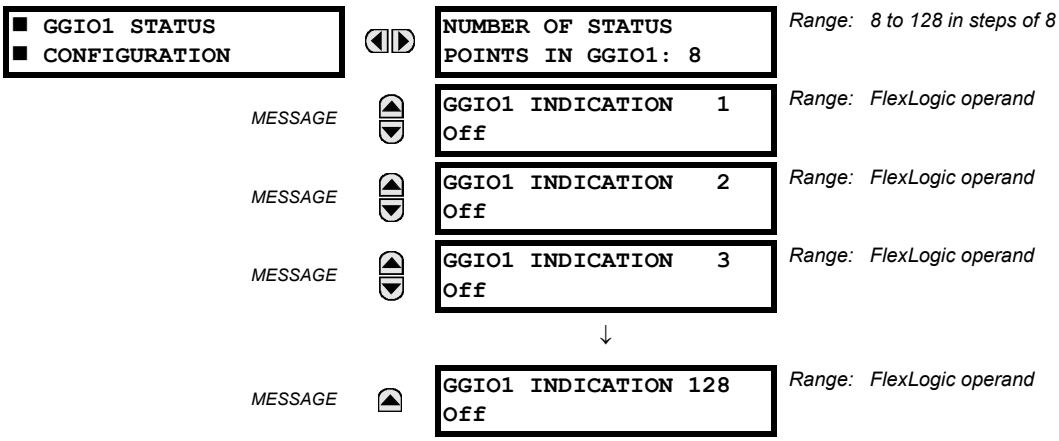

The **NUMBER OF STATUS POINTS IN GGIO1** setting specifies the number of “Ind” (single point status indications) that are instantiated in the GGIO1 logical node. Changes to the **NUMBER OF STATUS POINTS IN GGIO1** setting will not take effect until the C70 is restarted.

The GGIO2 control configuration points are shown below:

PATH: SETTINGS ⇨ PRODUCT SETUP ⇨⇩ COMMUNICATIONS ⇨⇩ IEC 61850 PROTOCOL ⇨⇩ GGIO2 CONTROL CONFIGURATION ⇨ GGIO2 CF SPSCO 1(64)

The GGIO2 control configuration settings are used to set the control model for each input. The available choices are "0" (status only), "1" (direct control), and "2" (SBO with normal security). The GGIO2 control points are used to control the C70 virtual inputs.

The GGIO4 analog configuration points are shown below:

PATH: SETTINGS ⇨ PRODUCT SETUP ⇨⇩ COMMUNICATIONS ⇨⇩ IEC 61850 PROTOCOL ⇨⇩ GGIO4 ANALOG CONFIGURATION

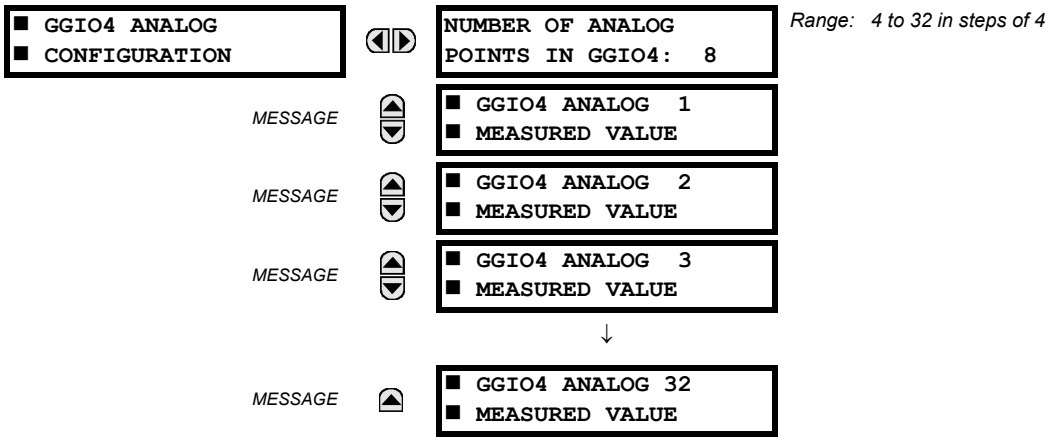

The **NUMBER OF ANALOG POINTS** setting determines how many analog data points will exist in GGIO4. When this value is changed, the C70 must be rebooted in order to allow the GGIO4 logical node to be re-instantiated and contain the newly configured number of analog points.

The measured value settings for each of the 32 analog values are shown below.

PATH: SETTINGS ⇨ PRODUCT... ⇨⇩ COMMUNICATIONS ⇨⇩ IEC 61850 PROTOCOL ⇨⇩ GGIO4 ANALOG CONFIGURATION ⇨ GGIO4 ANALOG 1(32) MEASURED VALUE

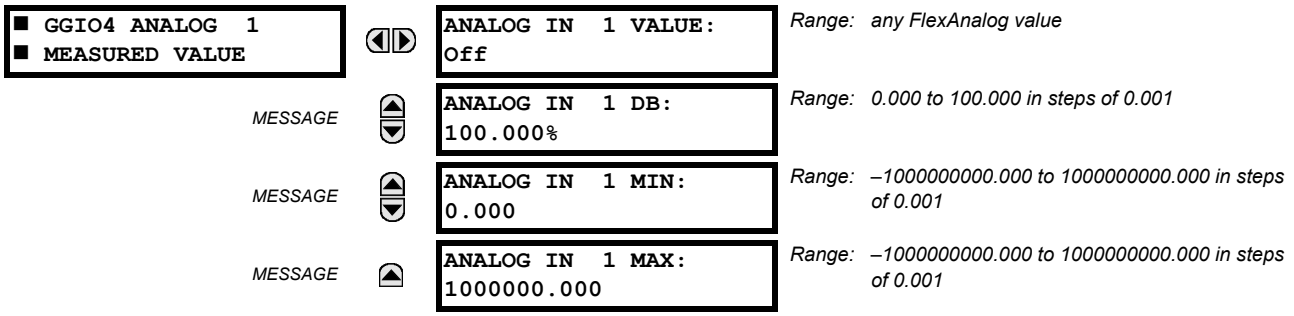

These settings are configured as follows.

- **ANALOG IN 1 VALUE**: This setting selects the FlexAnalog value to drive the instantaneous value of each GGIO4 analog status value (GGIO4.MX.AnIn1.instMag.f).
- **ANALOG IN 1 DB**: This setting specifies the deadband for each analog value. Refer to IEC 61850-7-1 and 61850-7-3 for details. The deadband is used to determine when to update the deadbanded magnitude from the instantaneous magnitude. The deadband is a percentage of the difference between the maximum and minimum values.
- **ANALOG IN 1 MIN**: This setting specifies the minimum value for each analog value. Refer to IEC 61850-7-1 and 61850-7-3 for details. This minimum value is used to determine the deadband. The deadband is used in the determination of the deadbanded magnitude from the instantaneous magnitude.
- **ANALOG IN 1 MAX**: This setting defines the maximum value for each analog value. Refer to IEC 61850-7-1 and 61850-7-3 for details. This maximum value is used to determine the deadband. The deadband is used in the determination of the deadbanded magnitude from the instantaneous magnitude.

NOTE

Note that the **ANALOG IN 1 MIN** and **ANALOG IN 1 MAX** settings are stored as IEEE 754 / IEC 60559 floating point numbers. Because of the large range of these settings, not all values can be stored. Some values may be rounded to the closest possible floating point number.

The GGIO5 integer configuration points are shown below:

PATH: SETTINGS ⇨ PRODUCT SETUP ⇨⇩ COMMUNICATIONS ⇨⇩ IEC 61850 PROTOCOL ⇨⇩ GGIO5 ANALOG CONFIGURATION

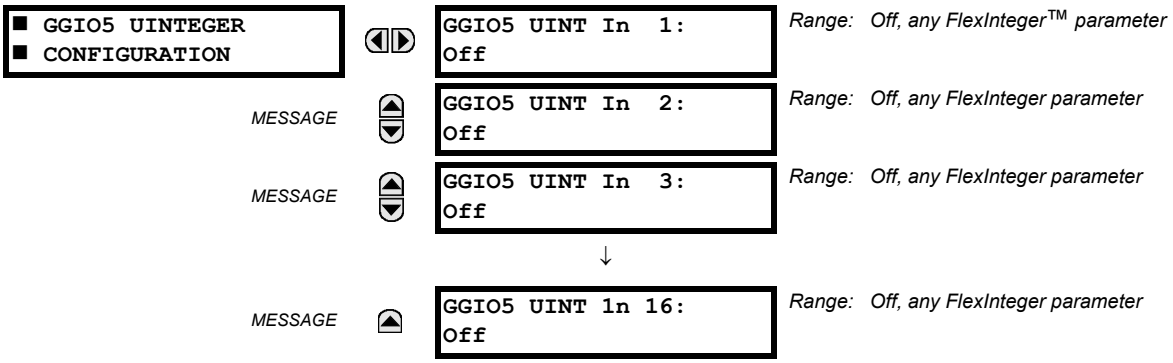

The GGIO5 logical node allows IEC 61850 client access to integer data values. This allows access to as many as 16 unsigned integer value points, associated timestamps, and quality flags. The method of configuration is similar to that of GGIO1 (binary status values). The settings allow the selection of FlexInteger values for each GGIO5 integer value point.

It is intended that clients use GGIO5 to access generic integer values from the C70. Additional settings are provided to allow the selection of the number of integer values available in GGIO5 (1 to 16), and to assign FlexInteger values to the GGIO5 integer inputs. The following setting is available for all GGIO5 configuration points.

- **GGIO5 UINT IN 1 VALUE**: This setting selects the FlexInteger value to drive each GGIO5 integer status value (GGIO5.ST.UIntIn1). This setting is stored as an 32-bit unsigned integer value.

The report control configuration settings are shown below:

PATH: SETTINGS ⇨ PRODUCT SETUP ⇨⇩ COMMUNICATIONS ⇨⇩ IEC 61850 PROTOCOL ⇨⇩ REPORT CONTROL CONFIGURATION ⇨ CONFIGURABLE REPORT 1 ⇨ REPORT 1 DATASET ITEMS

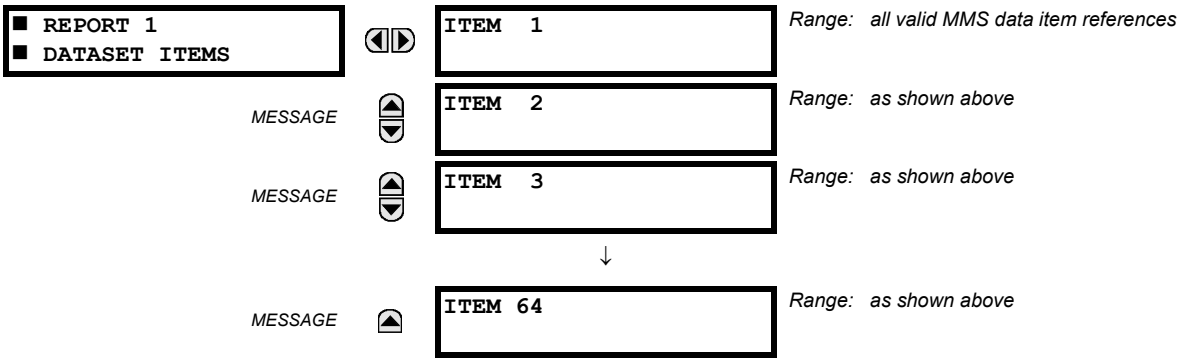

To create the dataset for logical node LN, program the **ITEM 1** to **ITEM 64** settings to a value from the list of IEC 61850 data attributes supported by the C70. Changes to the dataset will only take effect when the C70 is restarted. It is recommended to use reporting service from logical node LLN0 if a user needs some (but not all) data from already existing GGIO1, GGIO4, and MMXU4 points and their quantity is not greater than 64 minus the number items in this dataset.

The breaker configuration settings are shown below. Changes to these values take effect when the UR is restarted:

PATH: SETTINGS ⇨ PRODUCT SETUP ⇨⇩ COMMUNICATIONS ⇨⇩ IEC 61850 PROTOCOL ⇨⇩ XCBR CONFIGURATION ⇨ XCBR1(6) CONFIGURATION

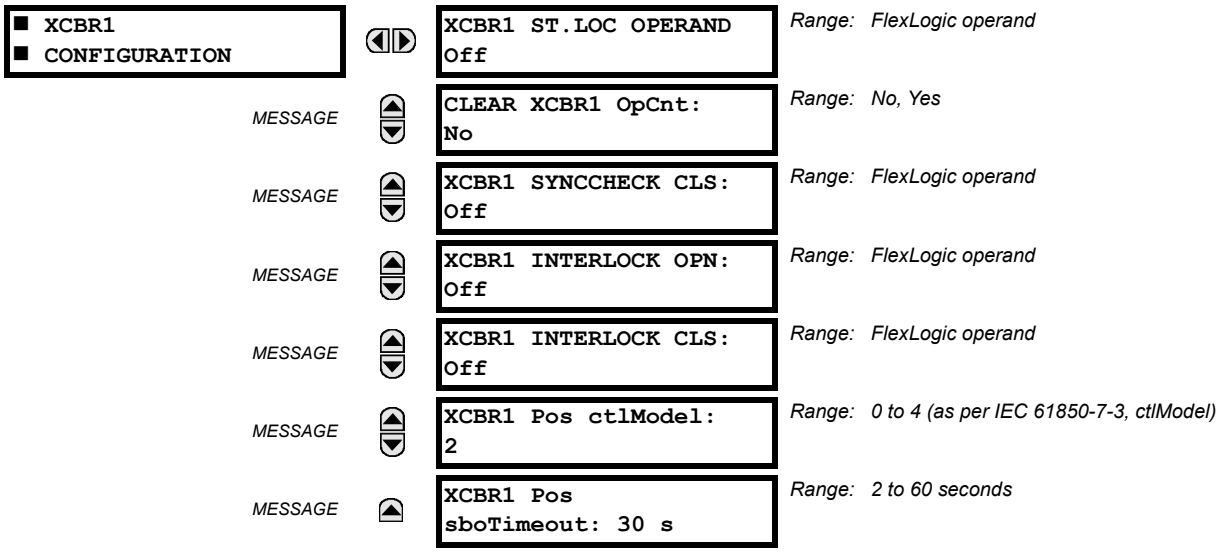

The XCBR1 ST.LOC OPERAND setting is used to inhibit 61850 control commands to close or open breaker through UR Breaker Control element. See the Breaker Control element logic diagram for more information.

The CLEAR XCBR1 OpCnt setting allows clearing the breaker operating counter. As breakers operate by opening and closing, the XCBR operating counter status attribute (OpCnt) increments with every operation. Frequent breaker operation can result in very large OpCnt values over time. This setting allows the OpCnt to be reset to “0” for XCBR1.

The XCBR1 SYNCCHECK CLS setting is used to supervise a close command with a synchrocheck condition within XCBR logical node. If a Close with SynchroCheck is requested (through a SelectWithValue service) and the SynchroCheck condition is not satisfied, a Negative Response (-Rsp) is issued with the REASON CODE of Blocked-by-synchrocheck.

The XCBR1 INTERLOCK OPN/CLS settings are used to assign an operand, which is linked into the EnaOpn or EnaCls INTERLOCKED inputs respectively of the XCBR. When this operand is asserted, XCBR logical node inhibits execution of the open and close commands respectively. If select before operate (SBO) with Extended Security is requested and Interlock condition exists, the UR responds with a Negative response (-Rsp) with the Reason Code Blocked-by-interlocking.

The XCBR1 Pos ctlModel setting is used to select control model per IEC 61850-7-3. The following control models are supported by URs:

0 — Status only

1 — Direct control with normal security (direct-operate)

2 — SBO control with normal security (operate-once)

3 — Direct control with enhanced security (direct-operate)

4 — SBO control with enhanced security (operate-once)

See IEC 61850-7-2 for complete details on these control models.

The XCBR1 Pos sboTimeout setting is used to select SBO timeout value. To be successful, the IEC 61850 "operate" command must be executed after the "select" command within the XCBR1 Pos sboTimeout setting value.

The disconnect switch configuration settings are shown below. Changes to these values will not take effect until the UR is restarted:

PATH: SETTINGS ⇨ PRODUCT SETUP ⇨⇩ COMMUNICATIONS ⇨⇩ IEC 61850 PROTOCOL ⇨⇩ XSWI CONFIGURATION

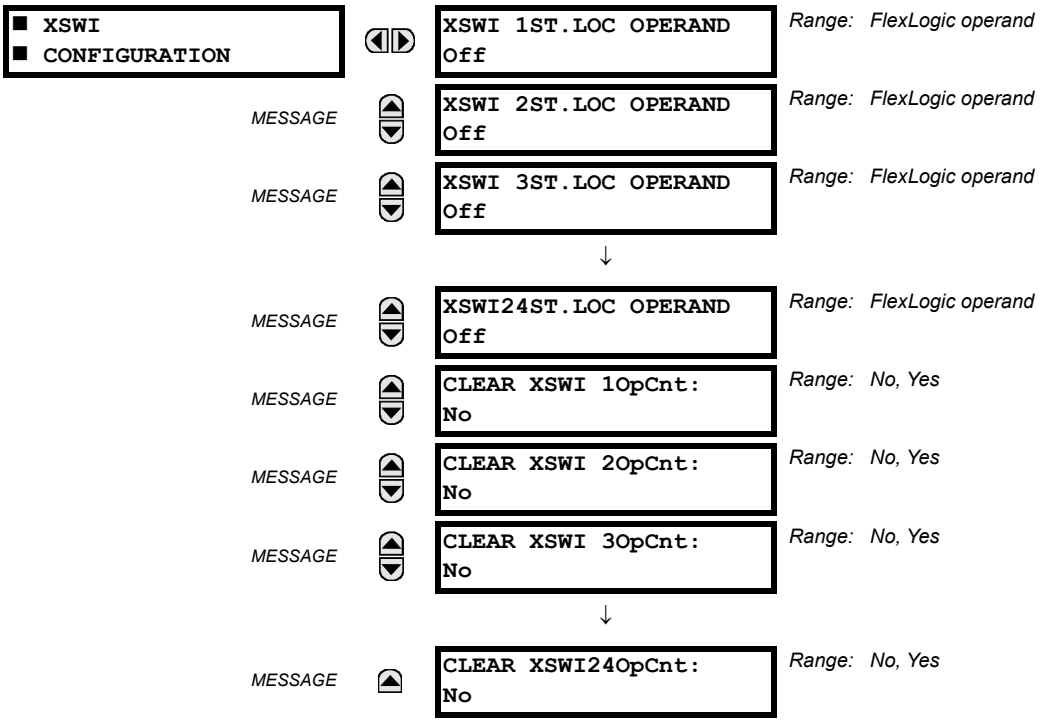

The **CLEAR XSWI1 OPCNT** setting represents the disconnect switch operating counter. As disconnect switches operate by opening and closing, the XSWI operating counter status attribute (OpCnt) increments with every operation. Frequent switch operation may result in very large OpCnt values over time. This setting allows the OpCnt to be reset to "0" for XSWI 1.

NOTE

Since GSSE/GOOSE messages are multicast Ethernet by specification, they are not usually be forwarded by network routers. However, GOOSE messages may be forwarded by routers if the router has been configured for VLAN functionality.

m) WEB SERVER HTTP PROTOCOL

PATH: SETTINGS ⇨ PRODUCT SETUP ⇨⇩ COMMUNICATIONS ⇨⇩ WEB SERVER HTTP PROTOCOL

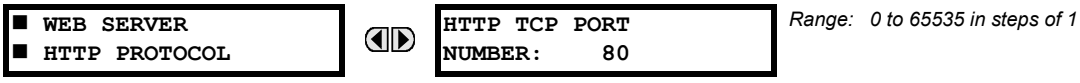

The C70 contains an embedded web server and is capable of transferring web pages to a web browser such as Internet Explorer or Firefox. The web pages are organized as a series of menus that can be accessed starting at the C70 "Main Menu". Web pages are available showing IEC 60870-5-104 points lists, Modbus registers, event records, fault reports, and so on. First connect the UR and a computer to an Ethernet network, then enter the IP address of the C70 Ethernet port employed into the "Address" box of the web browser.

NOTE

When the port is set to 0, the change takes effect when the C70 is restarted.

Do not set more than one protocol to the same TCP/UDP port number, as this results in unreliable operation of those protocols.

n) TFTP PROTOCOL

PATH: SETTINGS ⇨ PRODUCT SETUP ⇨⇩ COMMUNICATIONS ⇨⇩ TFTP PROTOCOL

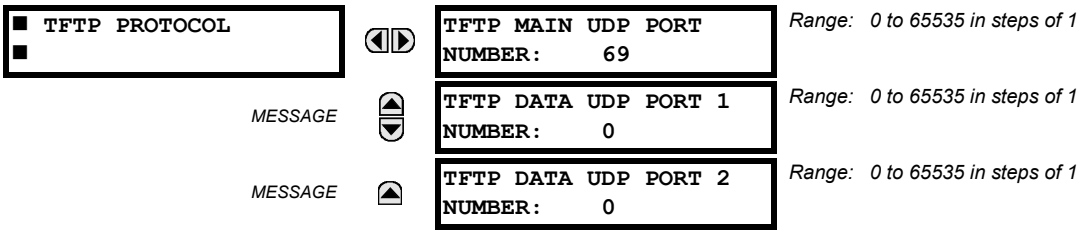

The Trivial File Transfer Protocol (TFTP) can be used to transfer files from the C70 over a network. The C70 operates as a TFTP server. TFTP client software is available from various sources, including Microsoft Windows NT. The `dir.txt` file obtained from the C70 contains a list and description of all available files (event records, oscillography, etc.).

NOTE

When the **TFTP MAIN UDP PORT NUMBER** is set to 0, the change takes effect when the C70 is restarted.

Do not set more than one protocol to the same TCP/UDP port number, as this results in unreliable operation of those protocols.

o) IEC 60870-5-104 PROTOCOL

PATH: SETTINGS ⇨ PRODUCT SETUP ⇨⇩ COMMUNICATIONS ⇨⇩ IEC 60870-5-104 PROTOCOL

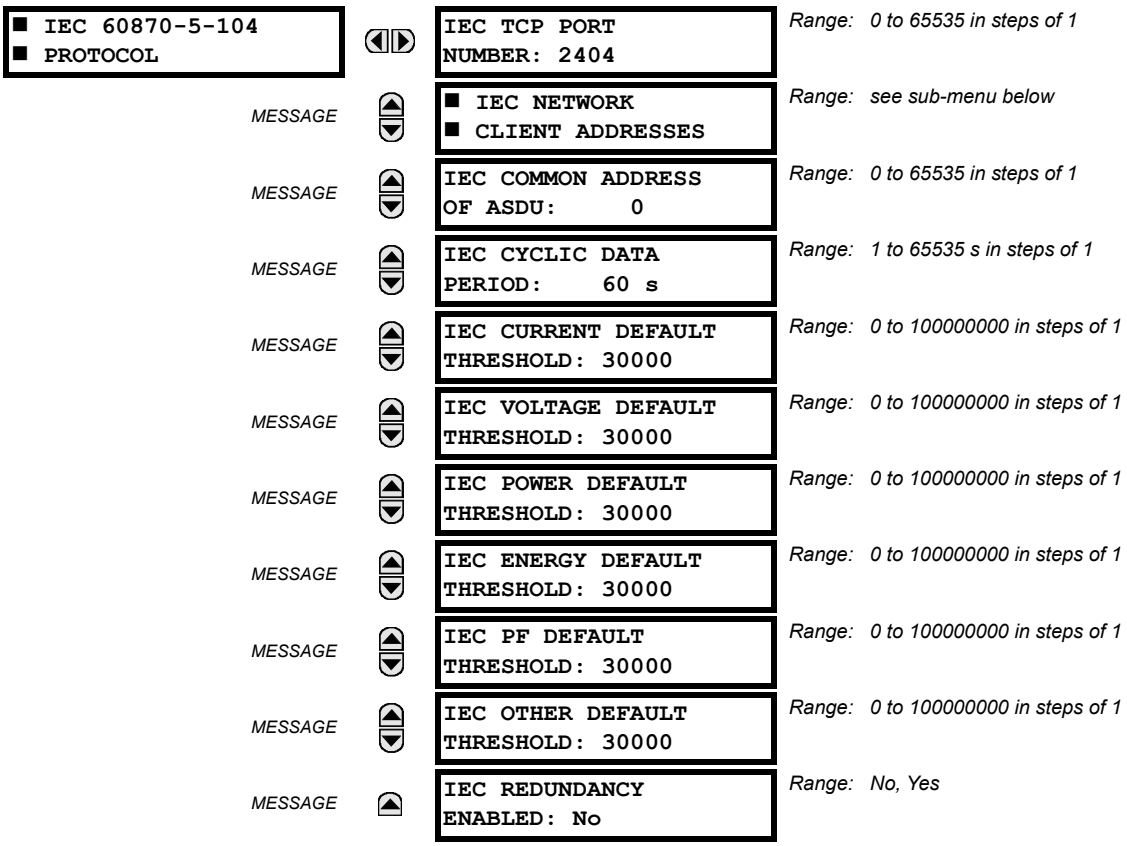

The C70 supports the IEC 60870-5-104 protocol. This protocol is enabled when the SETTINGS ⇨ PRODUCT SETUP ⇨⇩ COMMUNICATIONS ⇨ PROTOCOL setting is set to IEC 60870-5-104. The C70 can be used as an IEC 60870-5-104 slave device connected to a maximum of two masters (usually either an RTU or a SCADA master station). Since the C70 maintains two sets of IEC 60870-5-104 data change buffers, no more than two masters should actively communicate with the C70 at one time.

The **IEC ------- DEFAULT THRESHOLD** settings are used to determine when to trigger spontaneous responses containing M_ME_NC_1 analog data. These settings group the C70 analog data into types: current, voltage, power, energy, and other. Each setting represents the default threshold value for all M_ME_NC_1 analog points of that type. For example, to trigger spontaneous responses from the C70 when any current values change by 15 A, the **IEC CURRENT DEFAULT THRESHOLD** setting should be set to 15. Note that these settings are the default values of the deadbands. P_ME_NC_1 (parameter of measured value, short floating point value) points can be used to change threshold values, from the default, for each individual M_ME_NC_1 analog point. Whenever power is removed and re-applied to the C70, the default thresholds are in effect.

The **IEC REDUNDANCY** setting decides whether multiple client connections are accepted or not. If redundancy is set to Yes, two simultaneous connections can be active at any given time.

IEC TCP PORT NUMBER: When set to 0, the change takes effect when the C70 is restarted.

IEC COMMON ADDRESS OF ASDU: The change takes effect when the C70 is restarted.

IEC CYCLIC DATA PERIOD: The change takes effect when the C70 is restarted.

NOTE

Do not set more than one protocol to the same TCP/UDP port number, as this results in unreliable operation of those protocols.

NOTE

The C70 relay does not support energy metering. As such, the **IEC ENERGY DEFAULT THRESHOLD** setting is not applicable.

PATH: SETTINGS ⇨ PRODUCT SETUP ⇨⇩ COMMUNICATIONS ⇨⇩ IEC 60870-5-104 PROTOCOL ⇨⇩ IEC NETWORK CLIENT ADDRESSES

■ IEC NETWORK ■ CLIENT ADDRESSES		CLIENT ADDRESS 1: 0.0.0.0	*Range: Standard IPV4 address format*
	MESSAGE	CLIENT ADDRESS 2: 0.0.0.0	*Range: Standard IPV4 address format*
	MESSAGE	CLIENT ADDRESS 3: 0.0.0.0	*Range: Standard IPV4 address format*
	MESSAGE	CLIENT ADDRESS 4: 0.0.0.0	*Range: Standard IPV4 address format*
	MESSAGE	CLIENT ADDRESS 5: 0.0.0.0	*Range: Standard IPV4 address format*

The C70 can specify a maximum of five clients for its IEC 104 connections. These are IP addresses for the controllers to which the C70 can connect.

A maximum of two simultaneous connections are supported at any given time.

p) IEC 60870-5-103 PROTOCOL

PATH: SETTINGS ⇨ PRODUCT SETUP ⇨⇩ COMMUNICATIONS ⇨⇩ IEC 60870-5-103

■ IEC103 ■ PROTOCOL		IEC103 COMMON ADDRESS OF ASDU: 0	*Range: 0 to 254 in steps of 1*
	MESSAGE	IEC103 SYNC TIMEOUT: 1	*Range: 1 to 1440 min in steps of 1*
	MESSAGE	■ IEC103 INPUTS ■ BINARY	*Range: see sub-menu below*
	MESSAGE	■ IEC103 INPUTS ■ MEASURANDS	*Range: see sub-menu below*
	MESSAGE	■ IEC103 COMMANDS ■	*Range: see sub-menu below*

The C70 is provided with optional IEC 60870-5-103 communications capability. This feature is specified as a software option at the time of ordering. See the *Order Codes* section in chapter 2 for details.

The IEC 60870-5-103 protocol is enabled when the **SETTINGS ⇨ PRODUCT SETUP ⇨⇩ COMMUNICATIONS ⇨ PROTOCOL** setting is set to IEC 60870-5-103.

IEC103 COMMON ADDRESS OF ASDU: This setting uniquely defines this C70 on the serial line. Select an ID between 0 and 254. This ID does not need to be in sequential order for all stations that communicate with a controller, but it is recommended. Note that RS485 only allows a maximum of 32 slave stations on a communication line, so the entire range of 254 addresses is never exhausted.

IEC103 SYNC TIMEOUT: This setting defines the time that the C70 waits for a synchronization message. The C70 synchronizes its clock using all available sources, with the source synching more frequently overwriting the time of the other sources. Since the synchronization message received from the IEC 60870-5-103 master is less frequent than IRIG-B, PTP, or SNTP, its time is overwritten by these three sources, if any of them is active. If the synchronization timeout occurs and none of IRIG-B, PTP, or SNTP is active, the C70 sets the invalid bit in the time stamp of a time-tagged message.

The settings for the remaining menus are outlined as follows.

PATH: SETTINGS ⇨ PRODUCT SETUP ⇨⇩ COMMUNICATIONS ⇨⇩ IEC60870-5-103 ⇨ IEC103 INPUTS BINARY

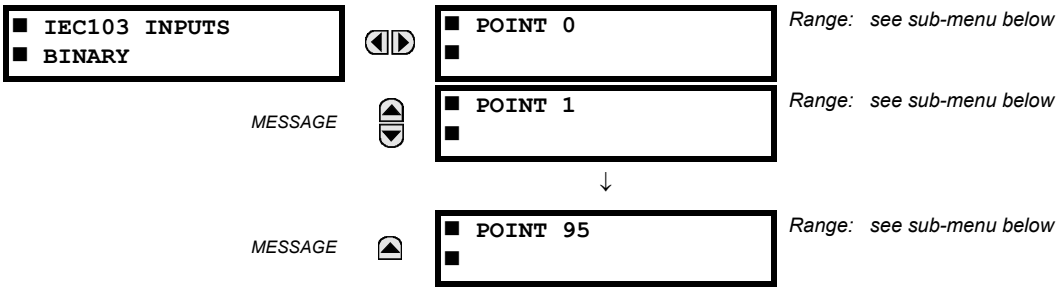

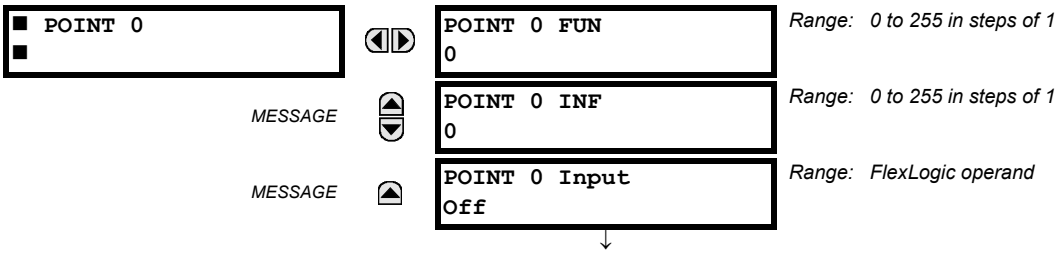

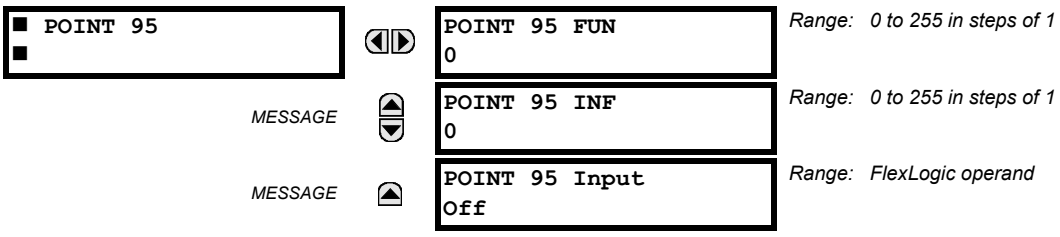

The binary input points are mapped using elements from a list of possible FlexLogic operands. A maximum of 96 binary inputs (points) can be mapped this way.

The IEC60870-5-103 point list always starts with point 0 and ends at the first "Off" value. Since the IEC 60870-5-103 point list must be in a continuous block, any points assigned after the first "Off" point are ignored.

For each defined point, set appropriate values for the Function Type (FUN) and Information Number (INF), which form the Information Object Identifier field of the ASDU, as defined in IEC60870-5-103.

The binary input points are sent as Class 1 data. They are sent either as a response to a general interrogation received from the controller or reported spontaneously. Spontaneous transmission occurs as a response to cyclic Class 2 requests. If the C70 wants to transmit Class 1 data at that time, it demands access for Class 1 data transmission (ACD=1 in the control field of the response).

For any change to take effect, restart the relay.

PATH: SETTINGS ⇨ PRODUCT SETUP ⇨⇩ COMMUNICATIONS ⇨⇩ IEC60870-5-103 ⇨ IEC103 INPUTS MEASURANDS

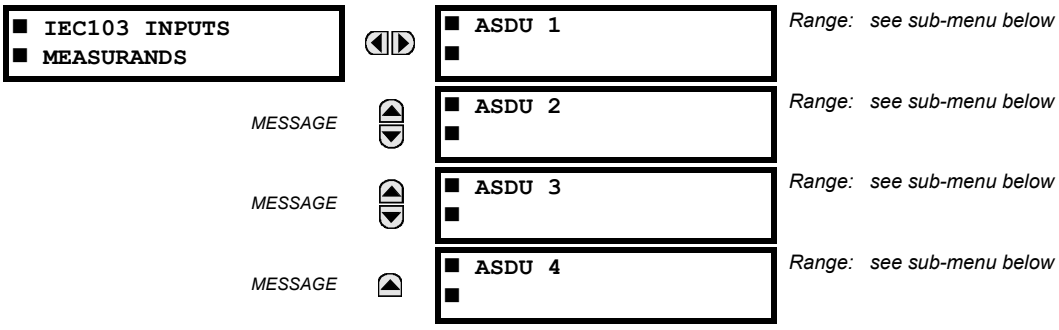

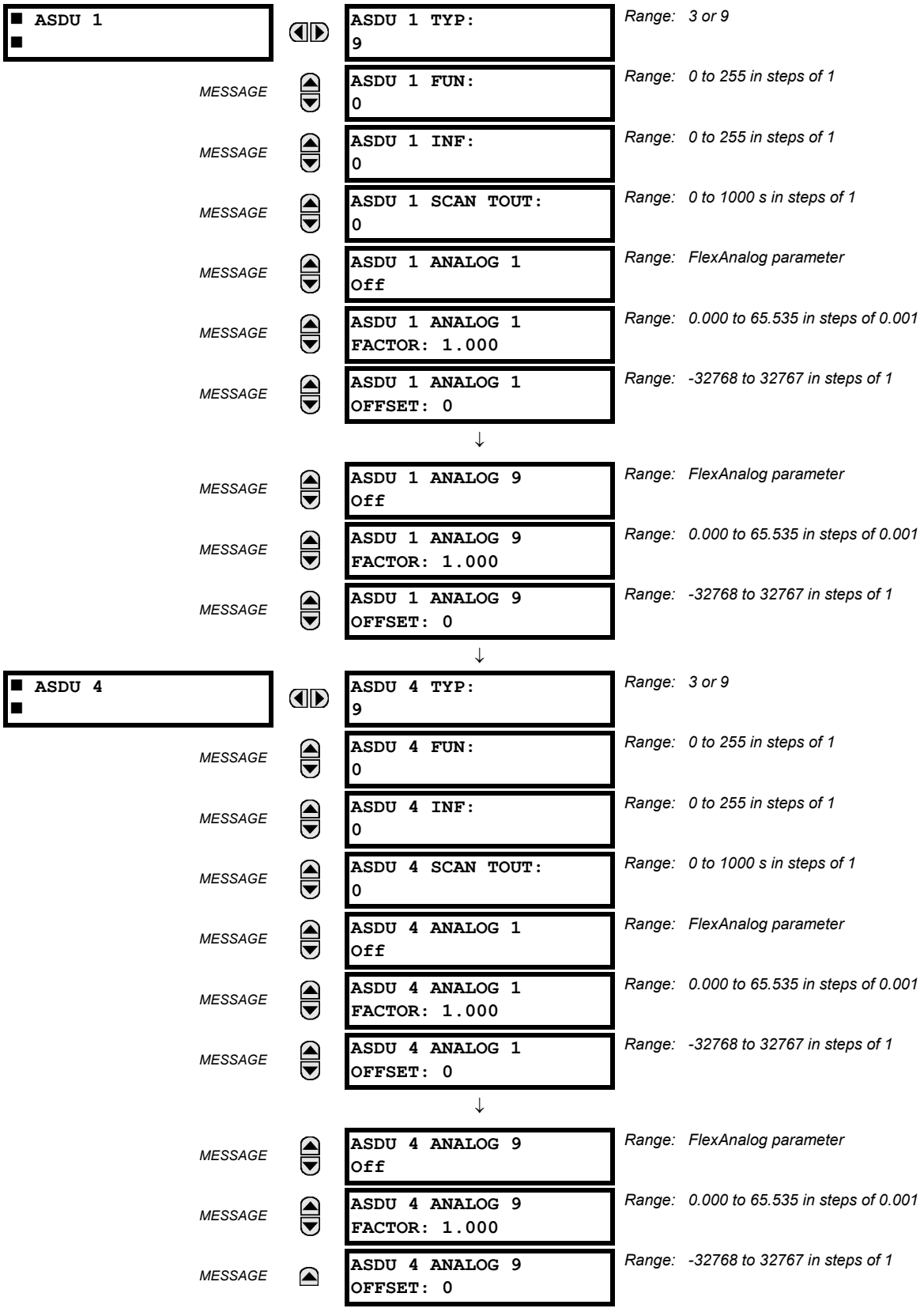
ASDU 1
ASDU 1 TYP:
9
Range: 3 or 9
MESSAGE
ASDU 1 FUN:
0
Range: 0 to 255 in steps of 1
MESSAGE
ASDU 1 INF:
0
Range: 0 to 255 in steps of 1
MESSAGE
ASDU 1 SCAN TOUT:
0
Range: 0 to 1000 s in steps of 1
MESSAGE
ASDU 1 ANALOG 1
Off
Range: FlexAnalog parameter
MESSAGE
ASDU 1 ANALOG 1
FACTOR: 1.000
Range: 0.000 to 65.535 in steps of 0.001
MESSAGE
ASDU 1 ANALOG 1
OFFSET: 0
Range: -32768 to 32767 in steps of 1
MESSAGE
ASDU 1 ANALOG 9
Off
Range: FlexAnalog parameter
MESSAGE
ASDU 1 ANALOG 9
FACTOR: 1.000
Range: 0.000 to 65.535 in steps of 0.001
MESSAGE
ASDU 1 ANALOG 9
OFFSET: 0
Range: -32768 to 32767 in steps of 1
ASDU 4
ASDU 4 TYP:
9
Range: 3 or 9
MESSAGE
ASDU 4 FUN:
0
Range: 0 to 255 in steps of 1
MESSAGE
ASDU 4 INF:
0
Range: 0 to 255 in steps of 1
MESSAGE
ASDU 4 SCAN TOUT:
0
Range: 0 to 1000 s in steps of 1
MESSAGE
ASDU 4 ANALOG 1
Off
Range: FlexAnalog parameter
MESSAGE
ASDU 4 ANALOG 1
FACTOR: 1.000
Range: 0.000 to 65.535 in steps of 0.001
MESSAGE
ASDU 4 ANALOG 1
OFFSET: 0
Range: -32768 to 32767 in steps of 1
MESSAGE
ASDU 4 ANALOG 9
Off
Range: FlexAnalog parameter
MESSAGE
ASDU 4 ANALOG 9
FACTOR: 1.000
Range: 0.000 to 65.535 in steps of 0.001
MESSAGE
ASDU 4 ANALOG 9
OFFSET: 0
Range: -32768 to 32767 in steps of 1

The configuration menu allows a maximum of four ASDUs containing measurands.

Measurands are sent as a response to Class 2 requests, which are cyclic requests coming from the master.

TYPE IDENTIFICATION (TYP): The configuration field TYP indicates how many measurands are present in the corresponding ASDU. Each ASDU can take either 4 or 9 measurands maximum, depending on the type identification (3 respectively 9). For any change to take effect, restart the relay.

FUNCTION TYPE (FUN) AND INFORMATION NUMBER (INF): These two fields form the Information Object Identifier of the ASDU as defined in IEC60870-103. For any change to take effect, restart the relay.

SCAN TIMEOUT (SCAN TOUT): This is the cyclic period used by the C70 to decide when a measurand ASDU is included in a response. The measurand is sent as response to a Class 2 request when the corresponding timeout expires. The default value 0 means 500 ms.

ANALOG #: This field contains the actual measurand to be sent in the response to the master. The measurands can be mapped using elements from a list of FlexAnalog operands. The measurands sent are voltage, current, power, power factor, and frequency. If any other FlexAnalog is chosen, the C70 sends 0 instead of its value. Note that the power is transmitted in KW, not W. Measurands are transmitted as ASDU 3 or ASDU 9 (type identification value set to measurands I, respectively measurands II).

Each IEC60870-5-103 measurands list ends at the first unconfigured ("Off") value. Any measurand assigned after the first "Off" value is ignored.

At least one measurand per ASDU must be configured in order to configure the following ASDU. For example, the user can configure only one measurand for each ASDU, but the user is not allowed to skip ASDU2 and configure measurands in ASDU3.

For any change to take effect, restart the relay.

ANALOG # FACTOR AND OFFSET: For each measurand included in the ASDU, a factor and offset can also be configured. The factor and offset allow for scaling to be performed on measurands. The final measurement sent to the IEC60870-103 master is then "a*x + b", where x is the measurand, a is the multiplying factor and b is the offset. The master has to perform the reversed operation in order to retrieve the actual value if such scaling is done. By default a = 1 and b = 0, so no scaling is done if these values are left at their defaults. Examples of when scaling is appropriate are as follows:

- If the measured value contains decimals and it is important to preserve the resolution. Since the format for transmitting the measurand does not permit decimals, a factor a>1 can be applied before transmission. For example, a frequency F=59.9Hz can be transmitted as Ft = 10 * F = 10 * 59.9 = 599. In this case a = 10, b = 0. The master receives 599 and has to divide by 10 to retrieve the real value 59.9.
- If the measured value is larger than what fits in the format defined in IEC103. The format defined in the standard allows for signed integers up to 4095. By offsetting, unsigned integers up to 4096 + 4095 = 8191 are supported. Scaling using factors <1 can be required in such cases. The calculation is outlined in the IEC60870-5-103 appendix. Two examples follow, where you decide factors a and b.

  Example 1: Nominal power Pn = 100MW = 100000KW (power is transmitted in KW)

  Since P can be both positive and negative:

  Transmitted power Pt = (4095/(Pn*2.4)) * P = (4095/(100000 * 2.4)) * P

  = 0.017 * P

  a = 0.017

  b = 0

  Pt = 0.017 * P

  For a max power 100000KW * 2.4 = 240000KW, we transmit

  Pt = 0.017 * 240000 = 4080

  A value above 240 MW is indicated by overflow.

  Example 2: Nominal voltage Vn = 500000V

  Since RMS voltage V can be only positive:

Transmitted voltage Vt = (8191/(Vn*2.4)) * V - 4096 =

= (8191/(500000 * 2.4)) * V - 4096 = 0.0068 * V - 4096

a = 0.0068

Since the step is in increments of 0.001, we round it at:

a = 0.006

b = -4096

Vt = 0.006 * V - 4096

For max voltage 500000V * 2.4 = 1200000V, we transmit

Vt = 0.006 * 1200000 - 4096 = 7200 - 4096 = 3104

PATH: SETTINGS ⇨ PRODUCT SETUP ⇨⇩ COMMUNICATIONS ⇨⇩ IEC60870-5-103 ⇨ IEC103 COMMANDS

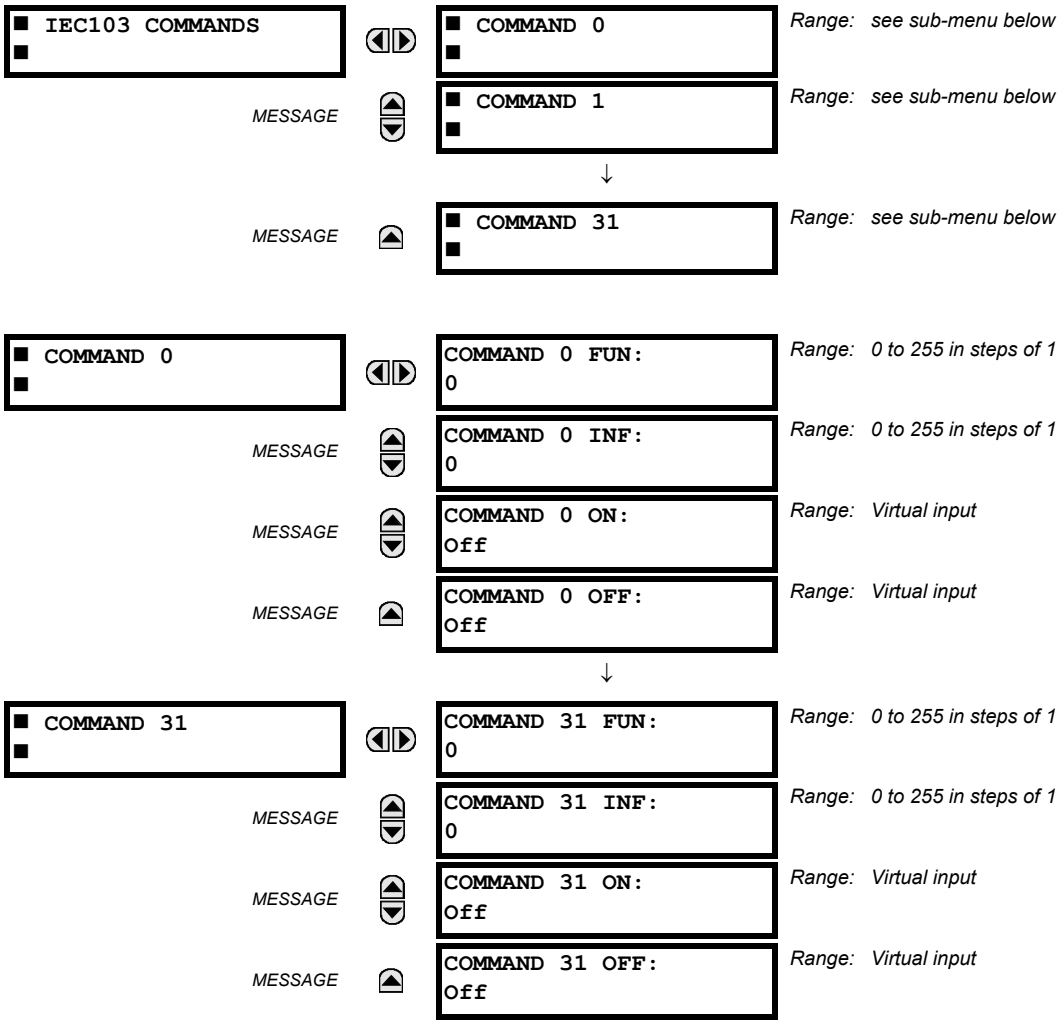

Commands are received as General Command (Type Identification 20). The user can configure which action to perform when an ASDU command comes.

A list of available mappings is provided on the C70. This includes 64 virtual inputs (see the following table). The ON and OFF for the same ASDU command can be mapped to different virtual inputs.

Each command is identified by the unique combination made by the function type (FUN), and information number (INF). If the master sends an ASDU command that does not have the FUN and INF of any configured command, the relay rejects it.

Table 5–8: COMMANDS MAPPING TABLE

DESCRIPTION	VALUE
Off	0
Virtual Input 1	1
Virtual Input 2	2
...	
Virtual Input 64	64

For any change to take effect, restart the relay.

5.2.5 MODBUS USER MAP

PATH: SETTINGS ⇨ PRODUCT SETUP ⇨⇩ MODBUS USER MAP

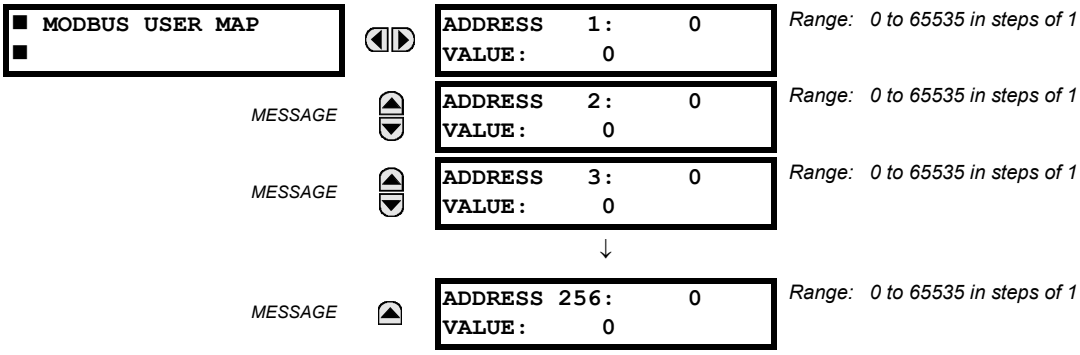

The Modbus user map provides read-only access for up to 256 registers. To obtain a memory map value, enter the desired address in the **ADDRESS** line (converted from hex to decimal format). The corresponding value displays in the **VALUE** line. A value of "0" in subsequent register **ADDRESS** lines automatically returns values for the previous **ADDRESS** lines incremented by "1". An address value of "0" in the initial register means "none" and values of "0" display for all registers. Different **ADDRESS** values can be entered as required in any of the register positions.

5.2.6 REAL TIME CLOCK

a) MAIN MENU

PATH: SETTINGS ⇨ PRODUCT SETUP ⇨⇩ REAL TIME CLOCK

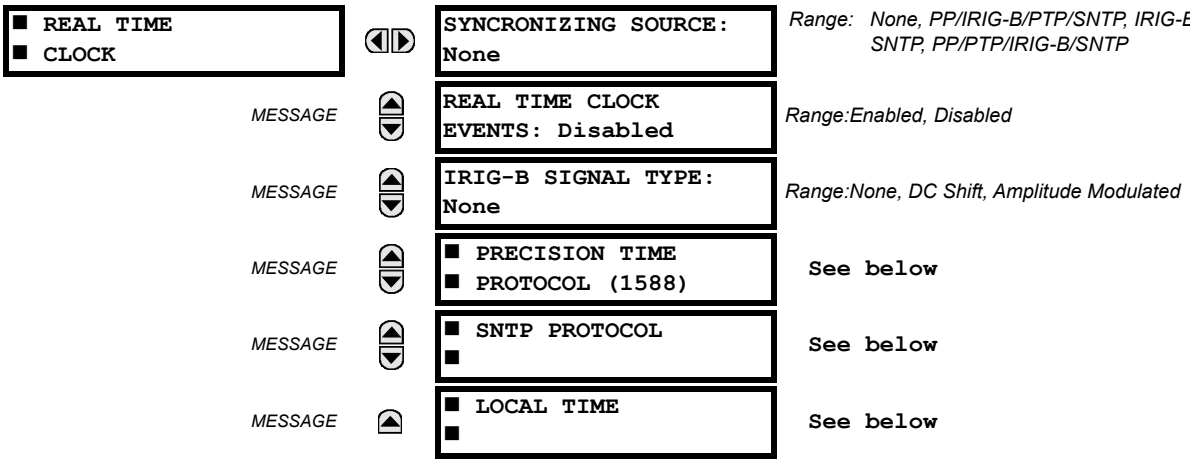

The relay contains a real time clock (RTC) to create timestamps for communications protocols as well as for historical data, such as event records and oscillography. When the relay restarts, the RTC initializes from an onboard battery-backed clock, which has the same accuracy as an electronic watch, approximately ±1 minute per month (~23 ppm). Once the RTC is synchronized with the Precision Time Protocol (PTP), IRIG-B, or SNTP, its accuracy approaches that of the synchroniz-

ing time delivered to the relay. While the RTC is not synchronized via PTP or IRIG-B, or the relay determines than it has an offset possibly greater than 10 µs from the international time standard, the CLOCK UNSYNCHRONIZED FlexLogic operand is activated.

The **SYNCHRONIZING SOURCE** setting displays when the relay includes the IEEE 1588 software option. The setting configures the priority sequence of the time synchronization source, to determine which of the available external time sources to use for time synchronization. A setting of None causes the RTC and the synchrophasor clock to free-run until the clock is changed from the front panel or from communications protocols. A setting of PP/IRIG-B/PTP/SNTP, IRIG-B/PP/PTP/SNTP, or PP/PTP/IRIG-B/SNTP causes the relay to track the first source named that is enabled and operational, or free-run if none of these are available. Here, PP means a time source that is strictly compliant with PP, and PTP means a time source that is not strictly compliant with PP. When a time source fails or recovers, the relay automatically transfers synchronization as required by this setting.

When the relay does not have the IEEE 1588 software option and this setting does not display, it uses IRIG-B when enabled and operational, then failing that SNTP when configured and operational, and otherwise it free-runs unless the clock is changed from the front panel or from communications protocols.

Whenever a time synchronization message is received through any of the active protocols, the UR clock updates. However, given that IEC 60870-5-103, IEC 60870-5-104, Modbus, and DNP are low accuracy time synchronization methods, avoid their use for synchronization when better accuracy time protocols, such as IRIG-B and PTP, are active in the system.

See the **COMMANDS ⇨SET DATE AND TIME** menu section of this manual to manually set the RTC.

The **REAL TIME CLOCK EVENTS** setting allows changes to the date and/or time to be captured in the event record. The event records the RTC time before the adjustment. A Date/Time Changed event is generated when:

- The real time clock changed from SNTP/PTP/IRIG-B and the time difference is more than one second
- The real time clock changed from the front panel or via Modbus register. The relay always generates this event regardless of the time difference.
- The Daylight Saving Time (DST) setting gets enabled and the current relay time is already in the DST zone
- The real time clock enters or leaves DST

To enable IRIG-B synchronization, the input **IRIG-B SIGNAL TYPE** must be set to DC Shift or Amplitude Modulated. IRIG-B synchronization can be disabled by making this setting None. When IRIG-B is enabled and active, clock synchronization by communication protocols. (DNP, IEC 60870-5-103, IEC 60870-5-104) is blocked, and clock synchronization from the front panel and over Modbus is always enabled.

To configure and enable PTP and/or SNTP, or to set local time parameters (for example time zone, daylight savings), use the following sections.

b) PRECISION TIME PROTOCOL (1588)

PATH: SETTINGS ⇨ PRODUCT SETUP ⇨⇩ REAL TIME CLOCK ⇨⇩ PRECISION TIME PROTOCOL (1588)

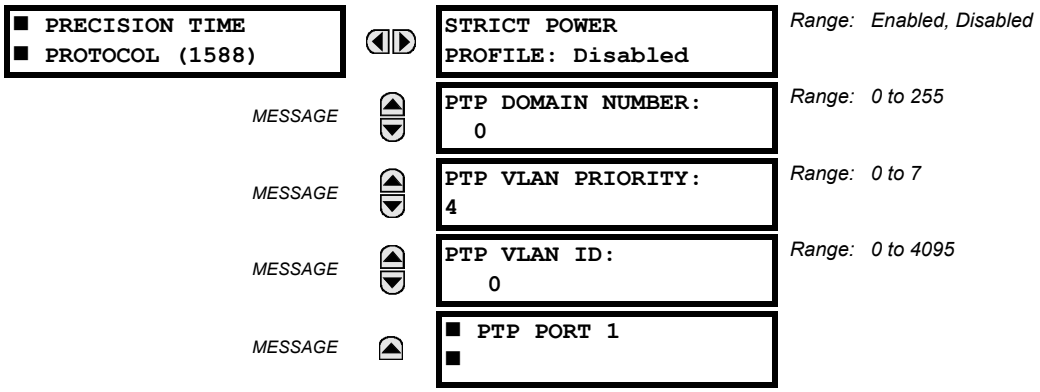

PATH: SETTINGS ⇨ PRODUCT SETUP ⇨⇩ REAL TIME CLOCK ⇨⇩ PRECISION TIME PROTOCOL (1588) ⇨⇩ PTP PORT 1(3)

MESSAGE

```
PORT 1 PTP FUNCTION:
Disabled
```

Range: Enabled, Disabled

MESSAGE

```
PORT 1 PATH DELAY
ADDER:      0 ns
```

Range: 0 to 60 000 ns in steps of 1

MESSAGE

```
PORT 1 PATH DELAY
ASYMMETRY:      0 ns
```

Range: –1 000 to +1 000 ns in steps of 1

The UR supports the Precision Time Protocol (PTP) specified in IEEE Std 1588 2008 using the Power Profile (PP) specified in IEEE Std C37.238 2011. This enables the relay to synchronize to the international time standard over an Ethernet network that implements PP.

The relay can be configured to operate on some PTP networks that are not strictly PP. Time accuracy can be less than specified for a PP network. Tolerated deviations from strict PP include 1) missing declaration of PP compliance in the messages, 2) connection to a network device that does not support the PTP peer delay mechanism, 3) jitter substantially greater than 1 µs in received event messages, and 4) certain non-compliant announce and sync message update rates.

NOTE

The relay implements PTP according to IEEE Std 1588 2008 and the equivalent IEC 61588:2009(E), sometimes referred to as version 2 PTP. It does not support the previous version of the standard (version 1).

PTP is a protocol that allows multiple clocks in a network to synchronize with one another. It permits synchronization accuracies better than 1 ns, but this requires each and every component in the network achieve very high levels of accuracy and a very high baud rate, faster than normally used for relay communications. When operating over a generic Ethernet network, time error may amount to 1 ms or more. PP is a profile of PTP which specifies a limited subset of PTP suitable for use in power system protection, control, automation and data communication applications, and thereby facilitates interoperability between different vendor's clocks and switches. PP specifies a worst-case delivered time error of less than 1 µs over a 16-hop network.

In a PTP system and in a PP system, the clocks automatically organize themselves into a master-slave synchronization hierarchy with the "best" clock available making itself the "grandmaster" at the top of the hierarchy; all others make themselves "slaves" and track the grandmaster. Typically the grandmaster clock receives its time from GPS satellites or some other link to the international time standard. If the grandmaster fails, the next "best" clock available in the domain assumes the grandmaster role. Should a clock on starting up discover it is "better" that the present grandmaster, it assumes the grandmaster role and the previous grandmaster reverts to slave. The C70 qualification mechanism accepts a potential master clock as a new grandmaster, when in a four-second interval it has received three announce messages from it, all better than the present grandmaster clock and better than any other announce in this interval.

Time messages issued by the grandmaster are delayed as they pass through the network both due to the finite speed of the signal in the interconnecting fiber or wire, and due to processing delays in the Ethernet switches. Each clock and switch implementing PP measures the propagation delay to each of its PP neighbors, and compensates for these delays in the time received. Each network device implementing PP measures the processing delay it introduces in each time message and compensates for this delay in the time it transmits. As a result, the time delivered to end-devices such as the UR are virtually identical to the grandmaster time. Should one of the network devices in the hierarchy not fully implement PP, the associated propagation delay and/or latency may not be compensated for, and the time received at the end-device could be in error by more than 100 µs.

See the **Settings > Product Setup > Real Time Clock** section of this manual for a description of when time values received via PTP are used to update the relay's real time clock.

The following settings are available for configuring the relay for PTP.

STRICT POWER PROFILE

- Power profile (IEEE Std C37.238 2011) requires that the relay only select as a grandmaster power profile compliant clocks, that the delivered time have worst-case error of ±1 µs, and that the peer delay mechanism be implemented. With the strict power profile setting enabled, the relay will only select as master clocks displaying the IEEE_C37_238 identification codes. It will use a port only when the peer delay mechanism is operational. With the strict power profile setting disabled, the relay will use clocks without the power profile identification when no power profile clocks are present, and will use ports even if the peer delay mechanism is non-operational.
- This setting applies to all of the relay's PTP capable ports.

PTP DOMAIN NUMBER

- This setting should be set to the domain number of the grandmaster-capable clock(s) to be synchronized to. A network may support multiple time distribution domains, each distinguished with a unique domain number. More commonly, there is a single domain using the default domain number zero.
- This setting applies to all of the relay's PTP capable ports.

PTP VLAN PRIORITY

- This setting selects the value of the priority field in the 802.1Q VLAN tag in request messages issued by the relay's peer delay mechanism. In compliance with PP the default VLAN priority is 4, but it is recommended that in accordance with PTP it be set to 7.
- Depending on the characteristics of the device to which the relay is directly linked, VLAN Priority may have no effect.
- This setting applies to all of the relay's PTP capable ports.

PTP VLAN ID

- This setting selects the value of the ID field in the 802.1Q VLAN tag in request messages issued by the relay's peer delay mechanism. It is provided in compliance with PP. As these messages have a destination address that indicates they are not to be bridged, their VLAN ID serves no function, and so may be left at its default value.
- Depending on the characteristics of the device to which the relay is directly linked, VLAN ID may have no effect.
- This setting applies to all of the relay's PTP capable ports.

PORT 1 ... 3 FUNCTION

- While this port setting is selected to disabled, PTP is disabled on this port. The relay does not generate or listen to PTP messages on this port.

PORT 1 ... 3 PATH DELAY ADDER

- The time delivered by PTP is advanced by the time value in this setting prior to the time being used to synchronize the relay's real time clock. This is to compensate to the extent practical for time delivery delays not compensated for in the network. In a fully compliant PP network, the peer delay and the processing delay mechanisms compensate for all the delays between the grandmaster and the relay. In such networks, this setting should be zero.
- In networks containing one or more switches and/or clocks that do not implement both of these mechanisms, not all delays are compensated, so the time of message arrival at the relay will be later than the time indicated in the message. This setting can be used to approximately compensate for this delay. However, as the relay is not aware of network switching that dynamically changes the amount of uncompensated delay, there is no setting that will always completely correct for uncompensated delay. A setting can be chosen that will reduce worst-case error to half of the range between minimum and maximum uncompensated delay, if these values are known.

PORT 1 ... 3 PATH DELAY ASYMMETRY

- This setting corresponds to "delayAsymmetry" in PTP, which is used by the peer delay mechanism to compensate for any difference in the propagation delay between the two directions of a link. Except in unusual cases, the two fibers are of essentially identical length and composition, so this setting should be set to zero.
- In unusual cases where the length of the link is different in different directions, this setting should be set to the number of nanoseconds the Ethernet propagation delay to the relay is longer than the mean of path propagation delays to and from the relay. For instance, if it is known say from the physical length of the fibers and the propagation speed in the fibers that the delay from the relay to the Ethernet switch it is connected to is 9 000 ns and the that the delay from the switch to the relay is 11 000 ns, then the mean delay is 10 000 ns, and the path delay asymmetry is 11000 - 10000 = +1000 ns.

c) SNTP PROTOCOL

PATH: SETTINGS ⇨ PRODUCT SETUP ⇨⇩ REAL TIME CLOCK ⇨⇩ SNTP PROTOCOL

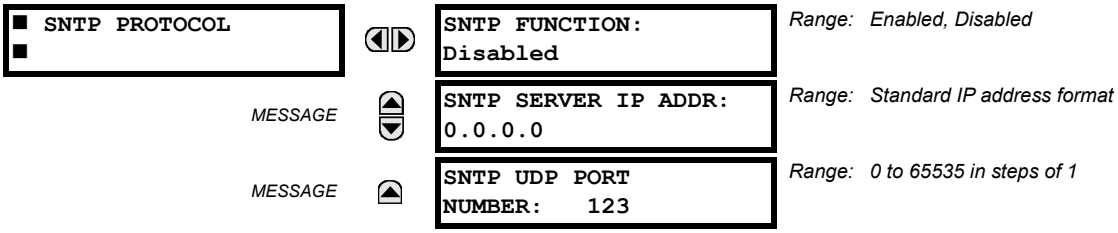

The C70 supports the Simple Network Time Protocol specified in RFC-2030. With SNTP, the C70 can obtain clock time over an Ethernet network. The C70 acts as an SNTP client to receive time values from an SNTP/NTP server, usually a dedicated product using a GPS receiver to provide an accurate time. UR series relays support unicast, broadcast, multicast, and anycast SNTP functionality.

The **SNTP FUNCTION** setting enables or disabled the SNTP feature on the C70.

To use SNTP in unicast mode, **SNTP SERVER IP ADDR** must be set to the SNTP/NTP server IP address. Once this address is set and **SNTP FUNCTION** is "Enabled," the C70 attempts to obtain time values from the SNTP/NTP server. Since many time values are obtained and averaged, it generally takes three to four minutes until the C70 clock is closely synchronized with the SNTP/NTP server. It takes up to two minutes for the C70 to signal an SNTP self-test error if the server is offline.

To use SNTP in broadcast mode, set the **SNTP SERVER IP ADDR** setting to "0.0.0.0" and **SNTP FUNCTION** to "Enabled." The C70 then listens to SNTP messages sent to the "all ones" broadcast address for the subnet. The C70 waits up to 18 minutes (>1024 seconds) without receiving an SNTP broadcast message before signaling an SNTP self-test error.

The **SNTP UDP PORT NUMBER** is 123 for normal SNTP operation. If SNTP is not required, close the port by setting it to 0.

NOTE When the **SNTP UDP PORT NUMBER** is set to 0, the change takes effect when the C70 is restarted.

d) LOCAL TIME

PATH: SETTINGS ⇨ PRODUCT SETUP ⇨⇩ REAL TIME CLOCK ⇨⇩ LOCAL TIME

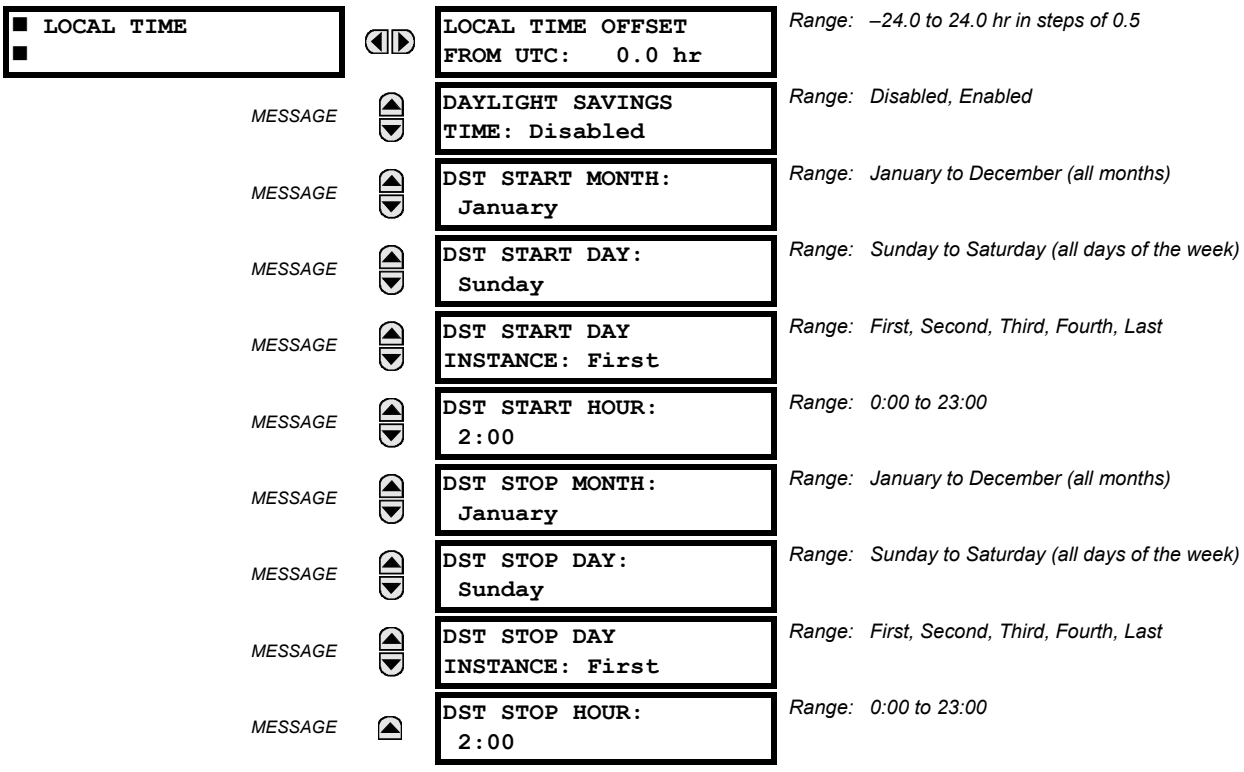

The UR device maintains two times: local time and Universal Coordinated Time (UTC). Local time can be provided by IRIG-B signals. UTC time is provided by SNTP servers.

The real-time clock (RTC) and time stamps reported in historical records and communication protocols can be incorrect if the Local Time settings are not configured properly.

See the IRIG-B section in the Installation chapter for guidance on these settings when using an IRIG-B source that sets the IRIG-B control bits according to IEEE Std 1344-1995.

The **LOCAL TIME OFFSET FROM UTC** setting is used to specify the local time zone offset from UTC (Greenwich Mean Time) in hours. Time zones in the eastern hemisphere have positive values; time zones in the western hemisphere have negative values. A value of zero causes the relay to use UTC for local time. This setting has two uses. When the system RTC is synchronized with a communications protocol providing only local time or it is free-running, the offset setting is used to calculate UTC from the local time these provide. When the RTC is synchronized with a communications protocol providing only UTC (such as PTP or SNTP), the time offset setting is used to determine local time from the UTC provided. PTP ALTERNATE_TIME_OFFSET_INDICATOR TLVs are not used to calculate local time.

The **DAYLIGHT SAVINGS TIME (DST)** settings can be used to allow the relay to follow the DST rules of the local time zone. Note that when IRIG-B time synchronization is active, the local time in the IRIG-B signal contains any daylight savings time offset and so the DST settings are ignored. Note that the following items do not include the DST: Time of Day Timer Start Time; Time of Day Timer Stop Time; Event Recorder Last Cleared Date; Source x Demand VAR Maximum Date; Source x Demand WATT Maximum Date; Source x Demand VA Maximum Date; Source x Demand Ia Maximum Date; Source x Demand Ib Maximum Date; Source x Demand Ic Maximum Date; PMU x Last Cleared Date; PMU One-Shot Time; Data Logger Newest Time; Data Logger Oldest Time; Oscillography Last Cleared Date; Last Settings Change Date; User Programmable Fault Report Cleared Date; Digital Counter x Frozen Time Stamp; HIZ RMS Capture x Time; and HIZ Capture x Time.

5.2.7 USER-PROGRAMMABLE FAULT REPORTS

PATH: SETTINGS ⇨ PRODUCT SETUP ⇨⇩ USER-PROGRAMMABLE FAULT REPORTS ⇨ USER-PROGRAMMABLE FAULT REPORT 1(2)

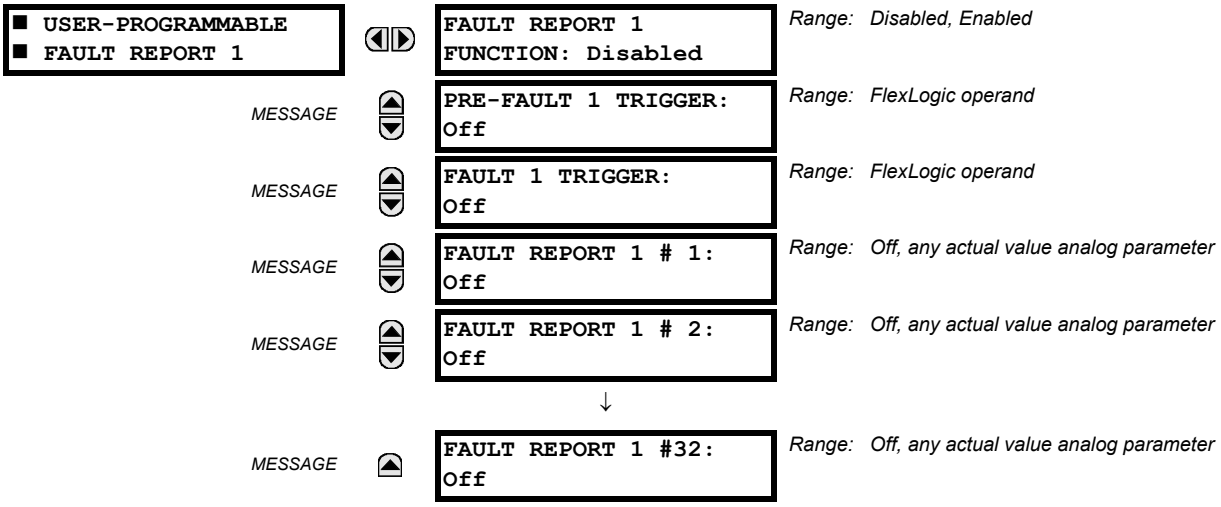

When enabled, this function monitors the pre-fault trigger. The pre-fault data are stored in the memory for prospective creation of the fault report on the rising edge of the pre-fault trigger. The element waits for the fault trigger as long as the pre-fault trigger is asserted, but not shorter than 1 second. When the fault trigger occurs, the fault data is stored and the complete report is created. If the fault trigger does not occur within 1 second after the pre-fault trigger drops out, the element resets and no record is created.

The user programmable record contains the following information: the user-programmed relay name, detailed firmware revision (7.2x, for example) and relay model (C70), the date and time of trigger, the name of pre-fault trigger (a specific FlexLogic operand), the name of fault trigger (a specific FlexLogic operand), the active setting group at pre-fault trigger, the active setting group at fault trigger, pre-fault values of all programmed analog channels (one cycle before pre-fault trigger), and fault values of all programmed analog channels (at the fault trigger).

Each fault report is stored as a file to a maximum capacity of ten files. An eleventh trigger overwrites the oldest file. The EnerVista UR Setup software is required to view all captured data. A FAULT RPT TRIG event is automatically created when the report is triggered.

The relay includes two user-programmable fault reports to enable capture of two types of trips (for example, trip from thermal protection with the report configured to include temperatures, and short-circuit trip with the report configured to include voltages and currents). Both reports feed the same report file queue.

The last record is available as individual data items via communications protocols.

- **PRE-FAULT 1 TRIGGER:** Specifies the FlexLogic operand to capture the pre-fault data. The rising edge of this operand stores one cycle-old data for subsequent reporting. The element waits for the fault trigger to actually create a record as long as the operand selected as **PRE-FAULT 1 TRIGGER** is "On". If the operand remains "Off" for 1 second, the element resets and no record is created.
- **FAULT 1 TRIGGER:** Specifies the FlexLogic operand to capture the fault data. The rising edge of this operand stores the data as fault data and results in a new report. The trigger (not the pre-fault trigger) controls the date and time of the report.
- **FAULT REPORT 1 # 1** to **FAULT REPORT 1 #32:** These settings specify an actual value such as voltage or current magnitude, true RMS, phase angle, frequency, temperature, etc., to be stored should the report be created. Up to 32 channels can be configured. Two reports are configurable to cope with variety of trip conditions and items of interest.

5.2.8 OSCILLOGRAPHY

a) MAIN MENU

PATH: SETTINGS ⇨ PRODUCT SETUP ⇨⇩ OSCILLOGRAPHY

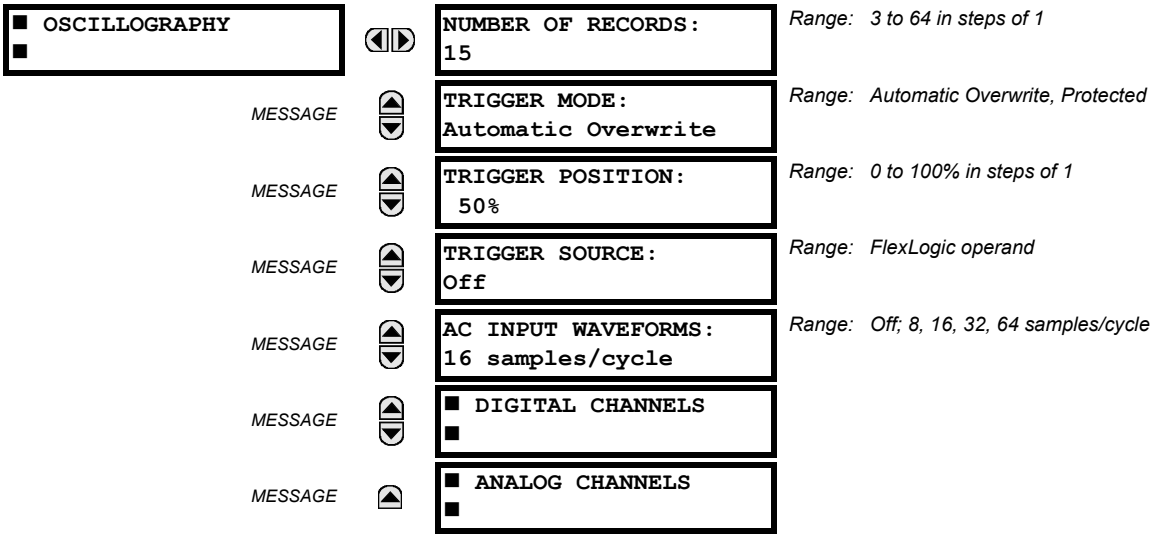

Oscillography records contain waveforms captured at the sampling rate as well as other relay data at the point of trigger. Oscillography records are triggered by a programmable FlexLogic operand. Multiple oscillography records can be captured simultaneously.

The **NUMBER OF RECORDS** is selectable, but the number of cycles captured in a single record varies considerably based on other factors, such as sample rate and the number of operational modules. There is a fixed amount of data storage for oscillography; the more data captured, the less the number of cycles captured per record. See the **ACTUAL VALUES ⇨⇩ RECORDS ⇨⇩ OSCILLOGRAPHY** menu to view the number of cycles captured per record. The following table provides sample configurations with corresponding cycles/record. The minimum number of oscillographic records is three.

Table 5–9: OSCILLOGRAPHY CYCLES/RECORD EXAMPLE

RECORDS	CT/VTS	SAMPLE RATE	DIGITAL CHANNELS	ANALOG CHANNELS	CYCLES PER RECORD
3	1	32	32	16	2399
3	1	64	32	16	1450
16	1	32	32	16	666
16	1	64	32	16	402
32	1	32	32	16	352
32	1	64	32	16	213
3	2	32	32	16	1516
3	2	64	32	16	851
16	2	32	32	16	421

A new record can automatically overwrite an older record when **TRIGGER MODE** is set to "Automatic Overwrite."

Set the **TRIGGER POSITION** to a percentage of the total buffer size (for example, 10%, 50%, 75%, and so on). A trigger position of 25% consists of 25% pre- and 75% post-trigger data. The **TRIGGER SOURCE** is always captured in oscillography and can be any FlexLogic parameter (element state, contact input, virtual output, and so on). The relay sampling rate is 64 samples per cycle.

The **AC INPUT WAVEFORMS** setting determines the sampling rate at which AC input signals (that is, current and voltage) are stored. Reducing the sampling rate allows longer records to be stored. This setting has no effect on the internal sampling rate of the relay which is always 64 samples per cycle; that is, it has no effect on the fundamental calculations of the device.

NOTE When changes are made to the oscillography settings, all existing oscillography records are cleared.

b) DIGITAL CHANNELS

PATH: SETTINGS ⇨ PRODUCT SETUP ⇨⇩ OSCILLOGRAPHY ⇨⇩ DIGITAL CHANNELS

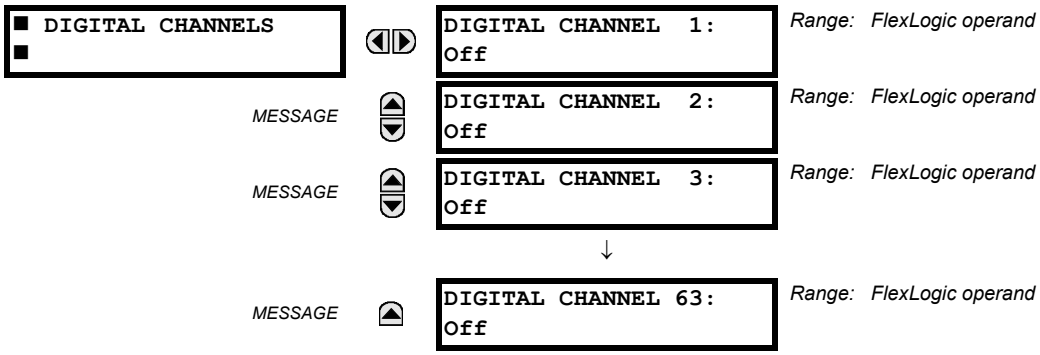

A **DIGITAL 1(63) CHANNEL** setting selects the FlexLogic operand state recorded in an oscillography trace. The length of each oscillography trace depends in part on the number of parameters selected here. Parameters set to "Off" are ignored. Upon startup, the relay will automatically prepare the parameter list.

c) ANALOG CHANNELS

PATH: SETTINGS ⇨ PRODUCT SETUP ⇨⇩ OSCILLOGRAPHY ⇨⇩ ANALOG CHANNELS

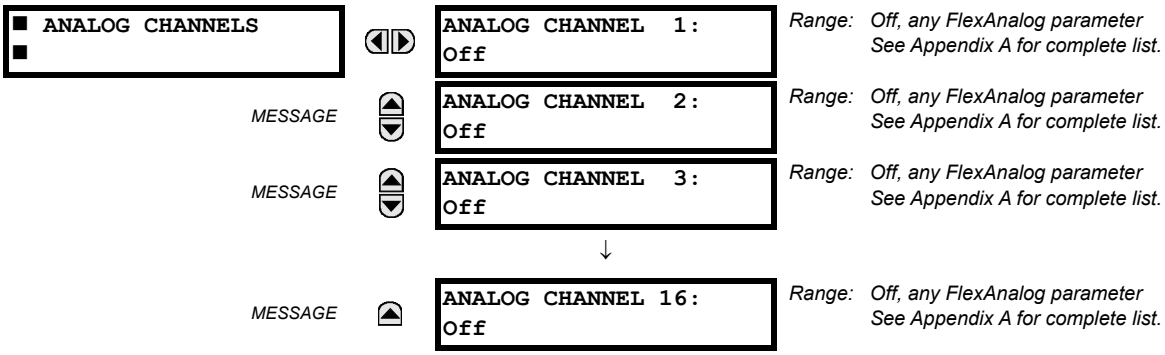

These settings select the metering actual value recorded in an oscillography trace. The length of each oscillography trace depends in part on the number of parameters selected here. Parameters set to "Off" are ignored. The parameters available in a given relay are dependent on:

- The type of relay,
- The type and number of CT/VT hardware modules installed, and
- The type and number of analog input hardware modules installed.

Upon startup, the relay will automatically prepare the parameter list. A list of all possible analog metering actual value parameters is presented in Appendix A: FlexAnalog Parameters. The parameter index number shown in any of the tables is used to expedite the selection of the parameter on the relay display. It can be quite time-consuming to scan through the list of parameters via the relay keypad and display - entering this number via the relay keypad will cause the corresponding parameter to be displayed.

All eight CT/VT module channels are stored in the oscillography file. The CT/VT module channels are named as follows:

<slot_letter><terminal_number>—<I or V><phase A, B, or C, or 4th input>

The fourth current input in a bank is called IG, and the fourth voltage input in a bank is called VX. For example, F2-IB designates the IB signal on terminal 2 of the CT/VT module in slot F.

If there are no CT/VT modules and analog input modules, no analog traces will appear in the file; only the digital traces will appear.

NOTE

The source harmonic indices appear as oscillography analog channels numbered from 0 to 23. These correspond directly to the to the 2nd to 25th harmonics in the relay as follows:

Analog channel 0 ↔ 2nd harmonic
Analog channel 1 ↔ 3rd harmonic
...
Analog channel 23 ↔ 25th harmonic

5.2.9 DATA LOGGER

PATH: SETTINGS ⇨⇩ PRODUCT SETUP ⇨⇩ DATA LOGGER

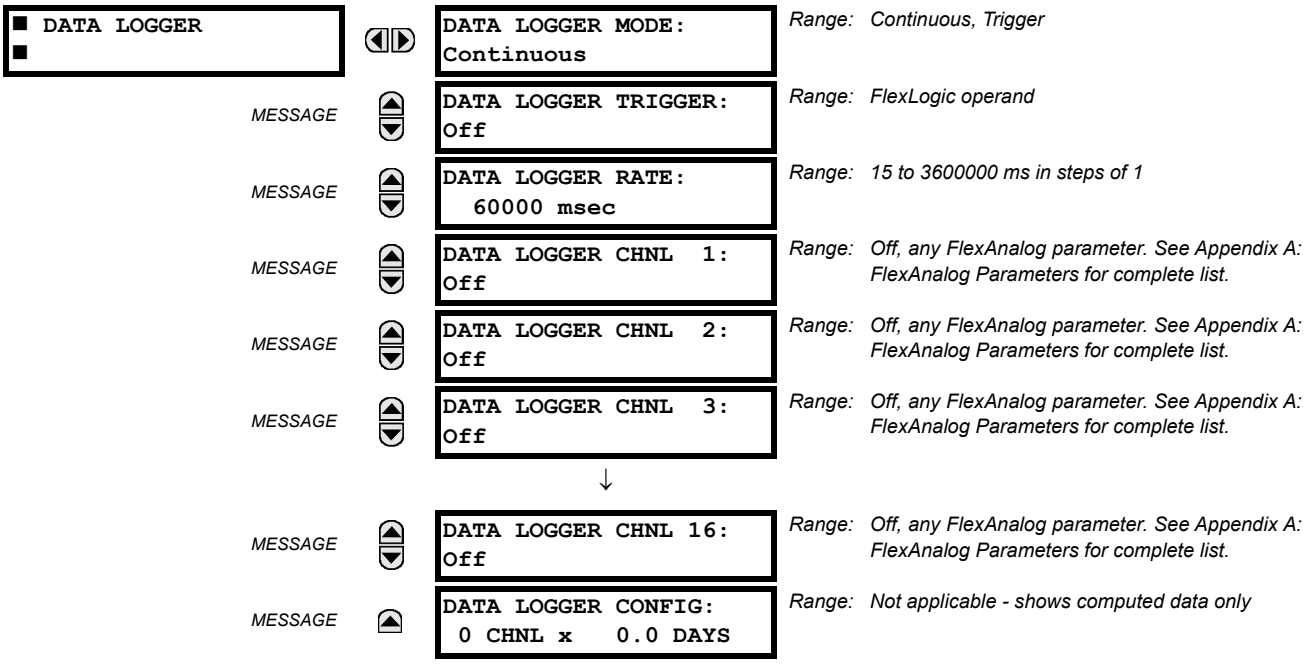

The data logger samples and records up to 16 analog parameters at a user-defined sampling rate. This recorded data may be downloaded to EnerVista UR Setup and displayed with *parameters* on the vertical axis and *time* on the horizontal axis. All data is stored in non-volatile memory, meaning that the information is retained when power to the relay is lost.

For a fixed sampling rate, the data logger can be configured with a few channels over a long period or a larger number of channels for a shorter period. The relay automatically partitions the available memory between the channels in use. Example storage capacities for a system frequency of 60 Hz are shown in the following table.

Table 5–10: DATA LOGGER STORAGE CAPACITY EXAMPLE

SAMPLING RATE	CHANNELS	DAYS	STORAGE CAPACITY
15 ms	1	0.1	954 s
	8	0.1	120 s
	9	0.1	107 s
	16	0.1	60 s
1000 ms	1	0.7	65457 s
	8	0.1	8182 s
	9	0.1	7273 s
	16	0.1	4091 s
60000 ms	1	45.4	3927420 s
	8	5.6	490920 s
	9	5	436380 s
	16	2.8	254460 s
3600000 ms	1	2727.5	235645200 s
	8	340.9	29455200 s
	9	303	26182800 s

NOTE

Changing any setting affecting data logger operation clears any data that is currently in the log.

- **DATA LOGGER MODE**: This setting configures the mode in which the data logger will operate. When set to "Continuous", the data logger will actively record any configured channels at the rate as defined by the **DATA LOGGER RATE**. The data logger will be idle in this mode if no channels are configured. When set to "Trigger", the data logger will begin to record any configured channels at the instance of the rising edge of the **DATA LOGGER TRIGGER** source FlexLogic operand. *The data logger will ignore all subsequent triggers* and will continue to record data until the active record is full. Once the data logger is full a **CLEAR DATA LOGGER** command is required to clear the data logger record before a new record can be started. Performing the **CLEAR DATA LOGGER** command will also stop the current record and reset the data logger to be ready for the next trigger.
- **DATA LOGGER TRIGGER**: This setting selects the signal used to trigger the start of a new data logger record. Any FlexLogic operand can be used as the trigger source. The **DATA LOGGER TRIGGER** setting only applies when the mode is set to "Trigger".
- **DATA LOGGER RATE:** This setting selects the time interval at which the actual value data will be recorded.
- **DATA LOGGER CHNL 1(16):** This setting selects the metering actual value that is to be recorded in Channel 1(16) of the data log. The parameters available in a given relay are dependent on: the type of relay, the type and number of CT/VT hardware modules installed, and the type and number of Analog Input hardware modules installed. Upon startup, the relay will automatically prepare the parameter list. A list of all possible analog metering actual value parameters is shown in Appendix A: FlexAnalog Parameters. The parameter index number shown in any of the tables is used to expedite the selection of the parameter on the relay display. It can be quite time-consuming to scan through the list of parameters via the relay keypad/display – entering this number via the relay keypad will cause the corresponding parameter to be displayed.
- **DATA LOGGER CONFIG:** This display presents the total amount of time the Data Logger can record the channels not selected to "Off" without over-writing old data.

5.2.10 USER-PROGRAMMABLE LEDS

a) MAIN MENU

PATH: SETTINGS ⇨ PRODUCT SETUP ⇨⇩ USER-PROGRAMMABLE LEDS

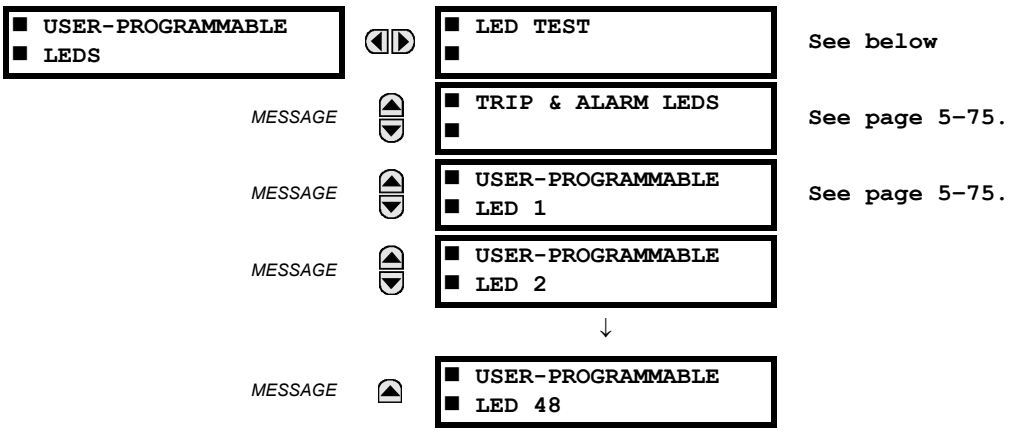

The 48 amber LEDs on relay panels 2 and 3 can be customized to illuminate when a selected FlexLogic operand is in the logic 1 state. The trip and alarm LEDs on panel 1 can also be customized in a similar manner. To ensure correct functionality of all LEDs, an LED test feature is also provided.

b) LED TEST

PATH: SETTINGS ⇨ PRODUCT SETUP ⇨⇩ USER-PROGRAMMABLE LEDS ⇨ LED TEST

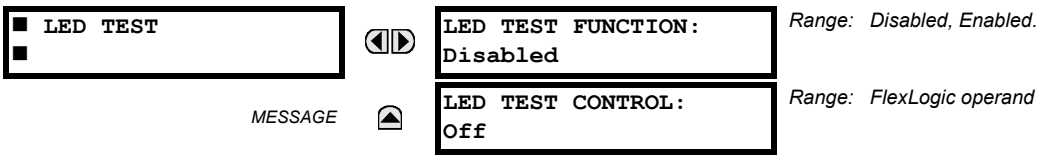

When enabled, the LED test can be initiated from any digital input or user-programmable condition such as user-programmable pushbutton. The control operand is configured under the **LED TEST CONTROL** setting. The test covers all LEDs, including the LEDs of the optional user-programmable pushbuttons.

The test consists of three stages.

1. All 62 LEDs on the relay are illuminated. This is a quick test to verify if any of the LEDs is "burned". This stage lasts as long as the control input is on, up to a maximum of 1 minute. After 1 minute, the test will end.
2. All the LEDs are turned off, and then one LED at a time turns on for 1 second, then back off. The test routine starts at the top left panel, moving from the top to bottom of each LED column. This test checks for hardware failures that lead to more than one LED being turned on from a single logic point. This stage can be interrupted at any time.
3. All the LEDs are turned on. One LED at a time turns off for 1 second, then back on. The test routine starts at the top left panel moving from top to bottom of each column of the LEDs. This test checks for hardware failures that lead to more than one LED being turned off from a single logic point. This stage can be interrupted at any time.

When testing is in progress, the LEDs are controlled by the test sequence, rather than the protection, control, and monitoring features. However, the LED control mechanism accepts all the changes to LED states generated by the relay and stores the actual LED states (on or off) in memory. When the test completes, the LEDs reflect the actual state resulting from relay response during testing. The reset pushbutton will not clear any targets when the LED Test is in progress.

A dedicated FlexLogic operand, LED TEST IN PROGRESS, is set for the duration of the test. When the test sequence is initiated, the LED TEST INITIATED event is stored in the event recorder.

The entire test procedure is user-controlled. In particular, stage 1 can last as long as necessary, and stages 2 and 3 can be interrupted. The test responds to the position and rising edges of the control input defined by the **LED TEST CONTROL** setting. The control pulses must last at least 250 ms to take effect. The following diagram explains how the test is executed.

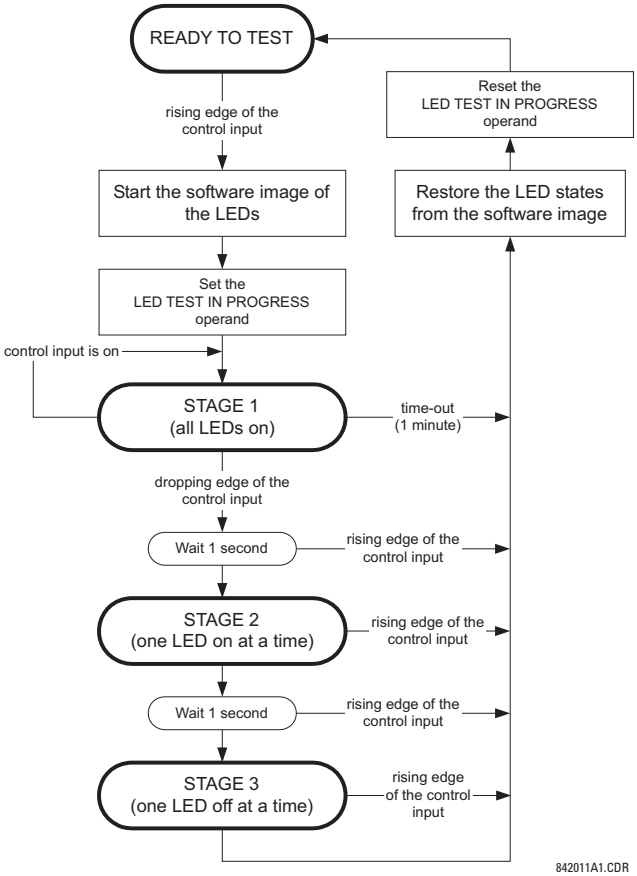

Figure 5–9: LED TEST SEQUENCE

Application Example 1:

Assume one needs to check if any of the LEDs is "burned" through user-programmable pushbutton 1. The following settings should be applied. Configure user-programmable pushbutton 1 by making the following entries in the SETTINGS ⇨ PRODUCT SETUP ⇨⇩ USER-PROGRAMMABLE PUSHBUTTONS ⇨ USER PUSHBUTTON 1 menu:

PUSHBUTTON 1 FUNCTION: "Self-reset"
PUSHBTN 1 DROP-OUT TIME: "0.10 s"

Configure the LED test to recognize user-programmable pushbutton 1 by making the following entries in the SETTINGS ⇨ PRODUCT SETUP ⇨⇩ USER-PROGRAMMABLE LEDS ⇨ LED TEST menu:

LED TEST FUNCTION: "Enabled"
LED TEST CONTROL: "PUSHBUTTON 1 ON"

The test will be initiated when the user-programmable pushbutton 1 is pressed. The pushbutton should remain pressed for as long as the LEDs are being visually inspected. When finished, the pushbutton should be released. The relay will then automatically start stage 2. At this point forward, test may be aborted by pressing the pushbutton.

Application Example 2:

Assume one needs to check if any LEDs are "burned" as well as exercise one LED at a time to check for other failures. This is to be performed via user-programmable pushbutton 1.

After applying the settings in application example 1, hold down the pushbutton as long as necessary to test all LEDs. Next, release the pushbutton to automatically start stage 2. Once stage 2 has started, the pushbutton can be released. When stage 2 is completed, stage 3 will automatically start. The test may be aborted at any time by pressing the pushbutton.

c) TRIP AND ALARM LEDS

PATH: SETTINGS ⇨ PRODUCT SETUP ⇨⇩ USER-PROGRAMMABLE LEDS ⇨⇩ TRIP & ALARM LEDS

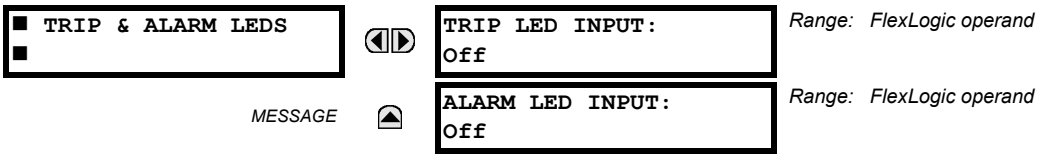

The trip and alarm LEDs are in the first LED column (enhanced faceplate) and on LED panel 1 (basic faceplate). Each indicator can be programmed to become illuminated when the selected FlexLogic operand is in the logic 1 state.

d) USER-PROGRAMMABLE LED 1(48)

PATH: SETTINGS ⇨ PRODUCT SETUP ⇨⇩ USER-PROGRAMMABLE LEDS ⇨⇩ USER-PROGRAMMABLE LED 1(48)

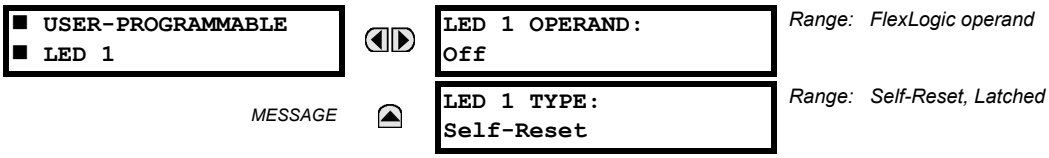

There are 48 amber LEDs across the relay faceplate LED panels. Each of these indicators can be programmed to illuminate when the selected FlexLogic operand is in the logic 1 state.

For the basic faceplate, the LEDs are located as follows.

- LED Panel 2: user-programmable LEDs 1 through 24
- LED Panel 3: user programmable LEDs 25 through 48

For the enhanced faceplate, the LEDs are located as follows.

- LED column 2: user-programmable LEDs 1 through 12
- LED column 3: user-programmable LEDs 13 through 24
- LED column 4: user-programmable LEDs 25 through 36
- LED column 5: user-programmable LEDs 37 through 48

See the LED Indicators section in chapter 4 for information on the location of these indexed LEDs.

The user-programmable LED settings select the FlexLogic operands that control the LEDs. If the **LED 1 TYPE** setting is "Self-Reset" (the default setting), the LED illumination will track the state of the selected LED operand. If the **LED 1 TYPE** setting is "Latched", the LED, once lit, remains so until reset by the faceplate RESET button, from a remote device via a communications channel, or from any programmed operand, even if the LED operand state de-asserts.

Table 5–11: RECOMMENDED SETTINGS FOR USER-PROGRAMMABLE LEDS

SETTING	PARAMETER	SETTING	PARAMETER
LED 1 operand	SETTING GROUP ACT 1	LED 13 operand	Off
LED 2 operand	SETTING GROUP ACT 2	LED 14 operand	Off
LED 3 operand	SETTING GROUP ACT 3	LED 15 operand	Off
LED 4 operand	SETTING GROUP ACT 4	LED 16 operand	Off
LED 5 operand	SETTING GROUP ACT 5	LED 17 operand	Off
LED 6 operand	SETTING GROUP ACT 6	LED 18 operand	Off
LED 7 operand	Off	LED 19 operand	Off
LED 8 operand	Off	LED 20 operand	Off
LED 9 operand	Off	LED 21 operand	Off
LED 10 operand	Off	LED 22 operand	Off
LED 11 operand	Off	LED 23 operand	Off
LED 12 operand	Off	LED 24 operand	Off

See the figure in the Setting Groups section in the Control Elements section later in this chapter for an example of group activation.

5

5.2.11 USER-PROGRAMMABLE SELF TESTS

PATH: SETTINGS ⇨ PRODUCT SETUP ⇨⇩ USER-PROGRAMMABLE SELF TESTS

■ USER-PROGRAMMABLE ■ SELF TESTS	◀▶	DIRECT RING BREAK FUNCTION: Enabled	*Range: Disabled, Enabled. Valid for units equipped with Direct Input/Output module.*
MESSAGE	▲▼	DIRECT DEVICE OFF FUNCTION: Enabled	*Range: Disabled, Enabled. Valid for units equipped with Direct Input/Output module.*
MESSAGE	▲▼	REMOTE DEVICE OFF FUNCTION: Enabled	*Range: Disabled, Enabled.*
MESSAGE	▲▼	FIRST ETHERNET FAIL FUNCTION: Disabled	*Range: Disabled, Enabled.*
MESSAGE	▲▼	SEC. ETHERNET FAIL FUNCTION: Disabled	*Range: Disabled, Enabled.*
MESSAGE	▲▼	THIRD ETHERNET FAIL FUNCTION: Disabled	*Range: Disabled, Enabled.*
MESSAGE	▲▼	SFP MODULE FAIL FUNCTION: Enabled	*Range: Disabled, Enabled.*
MESSAGE	▲▼	BATTERY FAIL FUNCTION: Enabled	*Range: Disabled, Enabled.*
MESSAGE	▲▼	SNTP FAIL FUNCTION: Enabled	*Range: Disabled, Enabled.*
MESSAGE	▲▼	IRIG-B FAIL FUNCTION: Enabled	*Range: Disabled, Enabled.*

MESSAGE

```
PTP FAIL
FUNCTION: Enabled
```

Range: Disabled, Enabled.

All major self-test alarms are reported automatically with their corresponding FlexLogic operands, events, and targets. Most of the minor alarms can be disabled if desired.

When in the Disabled mode, minor alarms do not assert a FlexLogic operand, write to the event recorder, or display target messages. Moreover, they do not trigger the **ANY MINOR ALARM** or **ANY SELF-TEST** messages. When in Enabled mode, minor alarms continue to function along with other major and minor alarms. See the Relay Self-Tests section in chapter 7 for information on major and minor self-test alarms.

5.2.12 CONTROL PUSHBUTTONS

PATH: SETTINGS ⇨ PRODUCT SETUP ⇨⇩ CONTROL PUSHBUTTONS ⇨ CONTROL PUSHBUTTON 1(7)

```
■ CONTROL
■ PUSHBUTTON 1
```

MESSAGE

```
CONTROL PUSHBUTTON 1
FUNCTION: Disabled
```

Range: Disabled, Enabled

```
CONTROL PUSHBUTTON 1
EVENTS: Disabled
```

Range: Disabled, Enabled

There are three standard control pushbuttons, labeled USER 1, USER 2, and USER 3, on the basic and enhanced front panels. These are user-programmable and can be used for various applications such as performing an LED test, switching setting groups, and invoking and scrolling though user-programmable displays.

The locations of the control pushbuttons are shown in the following figures.

Figure 5–10: CONTROL PUSHBUTTONS (ENHANCED FACEPLATE)

An additional four control pushbuttons are included on the basic faceplate when the C70 is ordered with the 12 user-programmable pushbutton option.

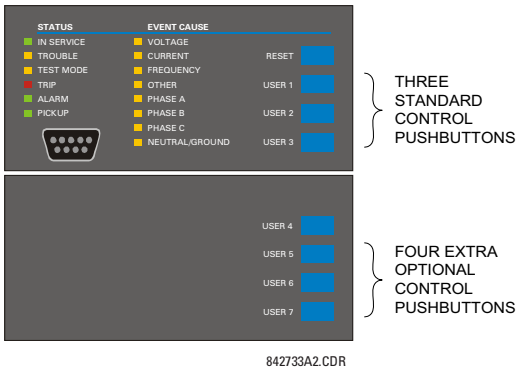

Figure 5–11: CONTROL PUSHBUTTONS (BASIC FACEPLATE)

Control pushbuttons are not typically used for critical operations and are not protected by the control password. However, by supervising their output operands, the user can dynamically enable or disable control pushbuttons for security reasons.

Each control pushbutton asserts its own FlexLogic operand. These operands should be configured appropriately to perform the desired function. The operand remains asserted as long as the pushbutton is pressed and resets when the pushbutton is released. A dropout delay of 100 ms is incorporated to ensure fast pushbutton manipulation will be recognized by various features that may use control pushbuttons as inputs.

An event is logged in the event record (as per user setting) when a control pushbutton is pressed. No event is logged when the pushbutton is released. The faceplate keys (including control keys) cannot be operated simultaneously – a given key must be released before the next one can be pressed.

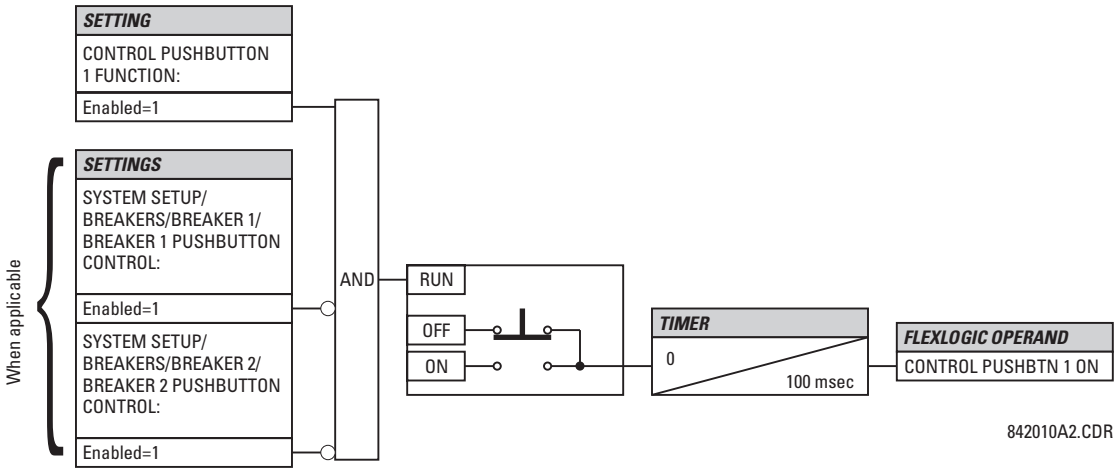

Figure 5–12: CONTROL PUSHBUTTON LOGIC

5.2.13 USER-PROGRAMMABLE PUSHBUTTONS

PATH: SETTINGS ⇨ PRODUCT SETUP ⇨⇩ USER-PROGRAMMABLE PUSHBUTTONS ⇨ USER PUSHBUTTON 1(16)

■ USER PUSHBUTTON 1 ■		PUSHBUTTON 1 FUNCTION: Disabled	Range: Self-Reset, Latched, Disabled
	MESSAGE	PUSHBTN 1 ID TEXT: USER PB 1	Range: Up to 20 alphanumeric characters
	MESSAGE	PUSHBTN 1 ON TEXT: USER PB 1 ON	Range: Up to 20 alphanumeric characters
	MESSAGE	PUSHBTN 1 OFF TEXT: USER PB 1 OFF	Range: Up to 20 alphanumeric characters
	MESSAGE	PUSHBTN 1 HOLD: 0.1 s	Range: 0.0 to 10.0 s in steps of 0.1
	MESSAGE	PUSHBTN 1 SET: Off	Range: FlexLogic operand
	MESSAGE	PUSHBTN 1 RESET: Off	Range: FlexLogic operand
	MESSAGE	PUSHBTN 1 AUTORST: Disabled	Range: Disabled, Enabled
	MESSAGE	PUSHBTN 1 AUTORST DELAY: 1.0 s	Range: 0.2 to 600.0 s in steps of 0.1
	MESSAGE	PUSHBTN 1 REMOTE: Off	Range: FlexLogic operand
	MESSAGE	PUSHBTN 1 LOCAL: Off	Range: FlexLogic operand
	MESSAGE	PUSHBTN 1 DROP-OUT TIME: 0.00 s	Range: 0 to 60.00 s in steps of 0.05
	MESSAGE	PUSHBTN 1 LED CTL: Off	Range: FlexLogic operand
	MESSAGE	PUSHBTN 1 MESSAGE: Disabled	Range: Disabled, Normal, High Priority
	MESSAGE	PUSHBUTTON 1 EVENTS: Disabled	Range: Disabled, Enabled

The C70 is provided with this optional feature, specified as an option at the time of ordering. Using the order code for your device, see the order codes in chapter 2 for details.

User-programmable pushbuttons provide an easy and error-free method of entering digital state (on, off) information. The number depends on the front panel ordered.

- Enhanced horizontal front panel — 16 user-programmable pushbuttons
- Enhanced vertical front panel — 6 user-programmable pushbuttons
- Basic horizontal front panel — 12 user-programmable pushbuttons

NOTE

User-programmable pushbuttons require a front panel with that option. If the front panel was ordered separately, update the EnerVista software under **Maintenance > Enable Pushbutton**.

The digital state can be entered locally (by directly pressing the front panel pushbutton) or remotely (via FlexLogic operands) into FlexLogic equations, protection elements, and control elements. Typical applications include breaker control, autorecloser blocking, and setting groups changes. The user-programmable pushbuttons are under the control level of password protection.

The figure shows user-configurable pushbuttons for the enhanced front panel.

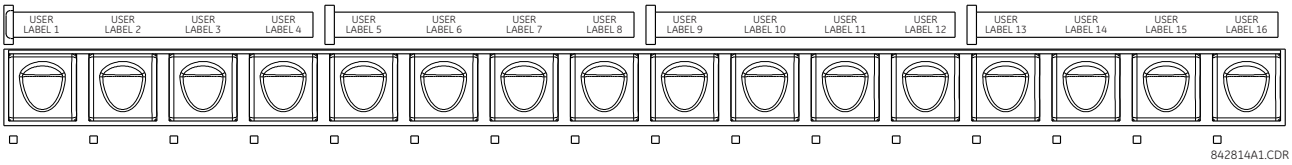

Figure 5–13: USER-PROGRAMMABLE PUSHBUTTONS (ENHANCED FRONT PANEL)

The following figure shows user-configurable pushbuttons for the basic front panel.

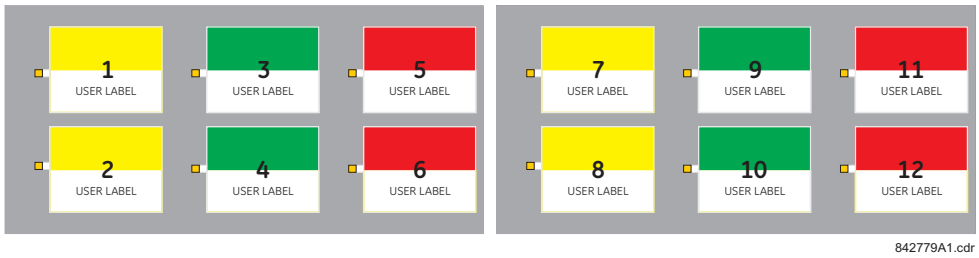

Figure 5–14: USER-PROGRAMMABLE PUSHBUTTONS (BASIC FRONT PANEL)

Both the basic and enhanced front panel pushbuttons can be custom labeled with a factory-provided template, available online at http://www.gegridsolutions.com/multilin. The EnerVista software can also be used to create labels for the enhanced front panel.

Each pushbutton asserts its own "On" and "Off" FlexLogic operands (for example, PUSHBUTTON 1 ON and PUSHBUTTON 1 OFF). These operands are available for each pushbutton and are used to program specific actions. If any pushbutton is active, the ANY PB ON operand is asserted.

Each pushbutton has an associated LED indicator. By default, this indicator displays the present status of the corresponding pushbutton (on or off). However, each LED indicator can be assigned to any FlexLogic operand through the **PUSHBTN 1 LED CTL** setting.

The activation and deactivation of user-programmable pushbuttons depends on whether latched or self-reset mode is programmed.

- *Latched mode*: In latched mode, a pushbutton can be set (activated) by asserting the operand assigned to the **PUSHBTN 1 SET** setting or by directly pressing the associated front panel pushbutton. The state of each pushbutton is stored in non-volatile memory and maintained through a loss of control power.

  The pushbutton is reset (deactivated) in latched mode by asserting the operand assigned to the **PUSHBTN 1 RESET** setting or by directly pressing the associated active front panel pushbutton.

  It can also be programmed to reset automatically through the **PUSHBTN 1 AUTORST** and **PUSHBTN 1 AUTORST DELAY** settings. These settings enable the autoreset timer and specify the associated time delay. The autoreset timer can be used in select-before-operate (SBO) breaker control applications, where the command type (close/open) or breaker location (feeder number) must be selected prior to command execution. The selection must reset automatically if control is not executed within a specified time period.

- *Self-reset mode*: In self-reset mode, a user-programmable pushbutton can be set (activated) by asserting the operand assigned to the PUSHBTN 1 SET setting or by pressing the front panel pushbutton. A pushbutton remains active for the time it is pressed plus the dropout time specified in the **PUSHBTN 1 DROP-OUT TIME** setting. If the pushbutton is activated via FlexLogic, the pulse duration is specified by the **PUSHBTN 1 DROP-OUT TIME** only. The time the operand remains assigned to the **PUSHBTN 1 SET** setting remains On has no effect on the pulse duration.

NOTE

The pulse duration of the remote set or local front panel pushbutton must be at least 50 ms to operate the pushbutton. This allows the user-programmable pushbuttons to properly operate during power cycling events and various system disturbances that can cause transient assertion of the operating signals.

The local and remote operation of each user-programmable pushbutton can be inhibited through the **PUSHBTN 1 LOCAL** and **PUSHBTN 1 REMOTE** settings. If local inhibit is applied, the pushbutton ignores set and reset commands executed through the front panel pushbuttons. If remote inhibit is applied, the pushbutton ignores set and reset commands executed through FlexLogic operands.

The inhibit functions are not applied to the autoreset feature. The inhibit function can be used in SBO control operations to prevent user-programmable pushbutton activation and ensuring “one-at-a-time” select operation.

The inhibit functions can also be used to prevent pushbutton activation from the accidental pressing of the front panel pushbuttons. The separate inhibit of the local and remote operation simplifies the implementation of local/remote control supervision.

Pushbutton states can be logged by the event recorder. User-defined messages can also be associated with each pushbutton and displayed when the pushbutton is activated and when in latched mode when the pushbutton deactivated.

- **PUSHBUTTON 1 FUNCTION**: This setting selects the mode of the pushbutton (Self-Reset, Latched, Disabled). If set to “Disabled,” the pushbutton is not active and the corresponding FlexLogic operands (both “On” and “Off”) are deasserted.
- **PUSHBTN 1 ID TEXT:** This setting specifies the top 20-character line of the user-programmable pushbutton message and is intended to provide ID information of the pushbutton. See the User-Definable Displays section in this chapter for instructions on how to enter alphanumeric characters from the keypad.
- **PUSHBTN 1 ON TEXT:** This setting specifies the bottom 20-character line of the user-programmable message and is displayed when the pushbutton is in the “on” position. See the User-Definable Displays section for instructions on entering alphanumeric characters from the keypad.
- **PUSHBTN 1 OFF TEXT:** This setting specifies the bottom 20-character line of the user-programmable pushbutton message and displays when the pushbutton is deactivated and the **PUSHBUTTON 1 FUNCTION** is “Latched”. A message does not display when the **PUSHBUTTON 1 FUNCTION** is “Self-reset” as the pushbutton operand status is implied to be “Off” upon its release. The length of the “Off” message is configured with the **PRODUCT SETUP ⇨⇩ DISPLAY PROPERTIES ⇨ FLASH MESSAGE TIME** setting.
- **PUSHBTN 1 HOLD**: This setting specifies the time required for a front panel pushbutton to be pressed before it is deemed active. This timer is reset upon release of the pushbutton. Note that user-programmable pushbutton operation requires the front panel pushbutton to be pressed a minimum of 56 ms for a 60 Hz system or 60 ms for a 50 Hz system. This minimum time is required prior to activating the user-programmable pushbutton hold timer.
- **PUSHBTN 1 SET**: This setting assigns the FlexLogic operand serving to activate the user-programmable pushbutton element. The duration of the incoming set signal must be at least 56 ms for a 60 Hz system or 60 ms for a 50 Hz system.
- **PUSHBTN 1 RESET**: This setting assigns the FlexLogic operand serving to deactivate the user-programmable pushbutton element. This setting is applicable only if the user-programmable pushbutton is in "Latched" mode.
- **PUSHBTN 1 AUTORST**: This setting enables the user-programmable pushbutton autoreset feature. This setting is applicable only if the pushbutton is in “Latched” mode.
- **PUSHBTN 1 AUTORST DELAY**: This setting specifies the time delay for automatic reset of the pushbutton when in "Latched" mode.
- **PUSHBTN 1 REMOTE**: This setting assigns the FlexLogic operand serving to inhibit user-programmable pushbutton operation from the operand assigned to the **PUSHBTN 1 SET** or **PUSHBTN 1 RESET** settings.
- **PUSHBTN 1 LOCAL**: This setting assigns the FlexLogic operand serving to inhibit user-programmable pushbutton operation from the front panel pushbuttons. This inhibit functionality is not applicable to pushbutton autoreset.
- **PUSHBTN 1 DROP-OUT TIME**: This setting applies only to “Self-Reset” mode and specifies the duration of the user-programmable pushbutton active status after the front panel pushbutton has been released. When activated remotely, this setting specifies the entire activation time of the pushbutton; the length of time the operand selected by PUSHBTN 1 SET remains on has no effect on the pulse duration.
- **PUSHBTN 1 LED CTL**: This setting assigns the FlexLogic operand serving to drive the front panel pushbutton LED. If this setting is “Off”, then LED operation is directly linked to the PUSHBUTTON 1 ON operand.

- **PUSHBTN 1 MESSAGE**: This setting controls the behavior of the user-programmable pushbutton that is programmed in the **PUSHBTN 1 ID** and **PUSHBTN 1 ON TEXT** settings, and the behavior of the user-programmable pushbutton off message that is programmed in the **PUSHBTN1 ID** and **PUSHBTN 1 OFF TEXT** settings.

  When set to "Disabled", user-programmable pushbutton messages do not display. Otherwise the on message displays when the user-programmable pushbutton becomes activated, and if in the "Latched" mode the off message displays when the user-programmable pushbutton becomes deactivated.

  When set to "Normal", the duration the message displays is as specified by the **FLASH MESSAGE TIME** setting.

  When set to "High Priority", the duration of the off message is as specified by the **FLASH MESSAGE TIME** setting, but the on message is displayed as long as the user-programmable pushbutton is activated. While activated, target and other messages are suppressed. To allow front panel keypad operation, when a keypad button is pressed the message is supressed for 10 seconds.

- **PUSHBUTTON 1 EVENTS**: If this setting is enabled, each user-programmable pushbutton state change is logged as an event into the event recorder.

The figures show the user-programmable pushbutton logic.

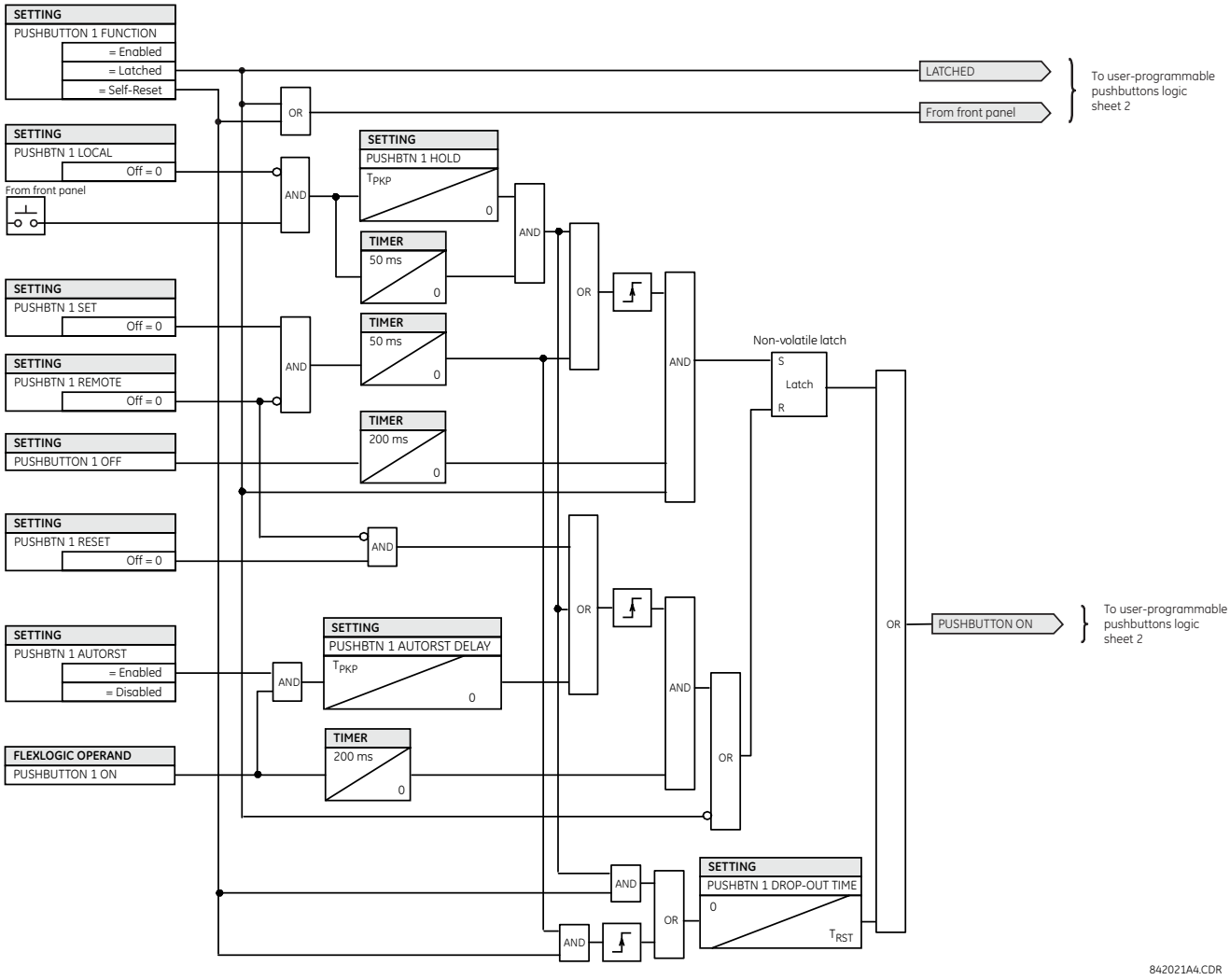

Figure 5–15: USER-PROGRAMMABLE PUSHBUTTON LOGIC (Sheet 1 of 2)

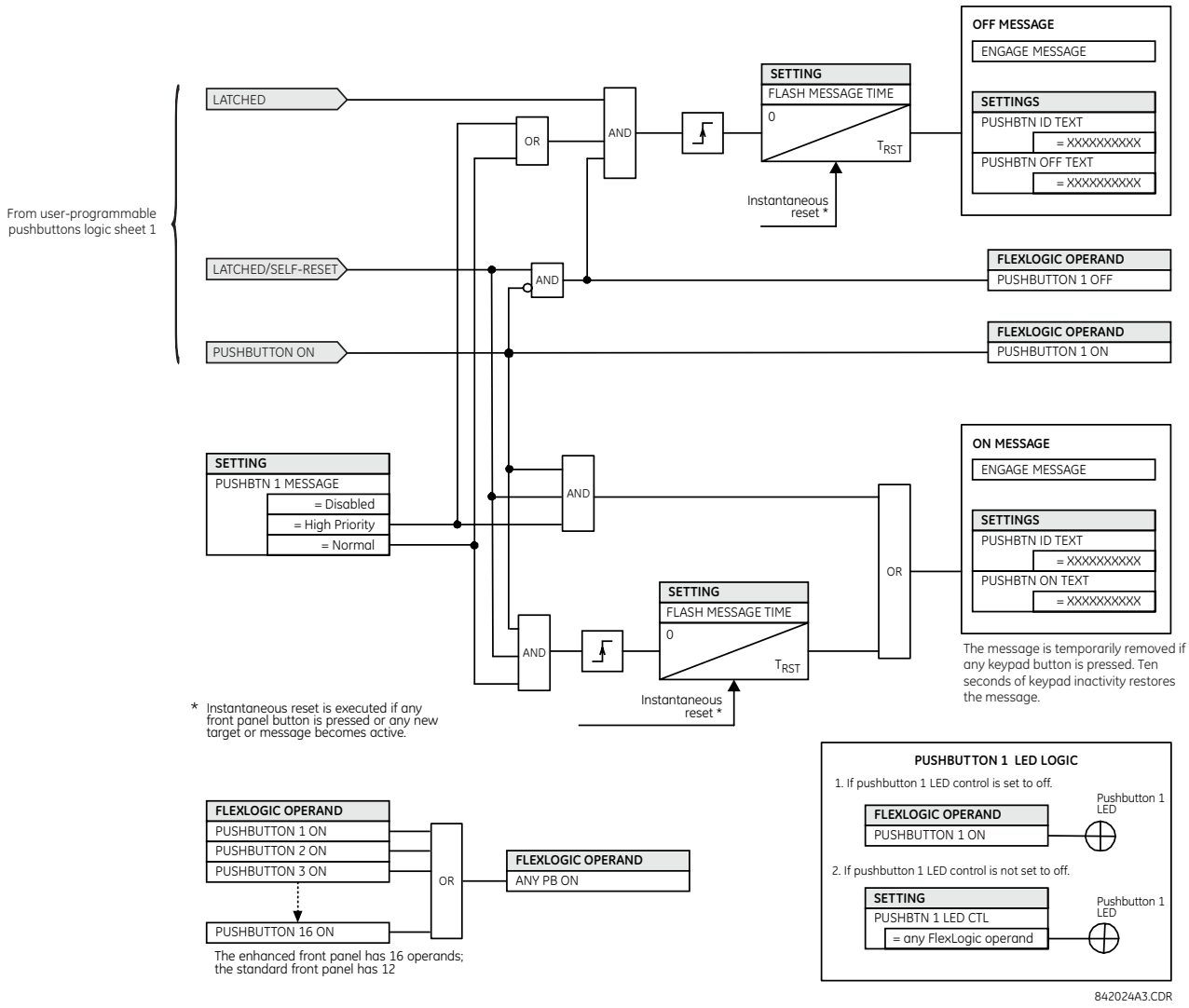

Figure 5–16: USER-PROGRAMMABLE PUSHBUTTON LOGIC (Sheet 2 of 2)

5.2.14 FLEX STATE PARAMETERS

PATH: SETTINGS ⇨ PRODUCT SETUP ⇨⇩ FLEX STATE PARAMETERS

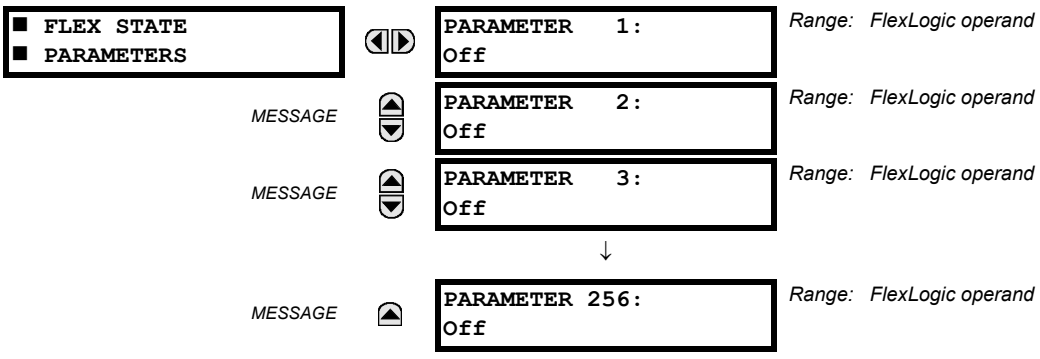

This feature provides a mechanism where any of 256 selected FlexLogic operand states can be used for efficient monitoring. The feature allows user-customized access to the FlexLogic operand states in the relay. The state bits are packed so that 16 states may be read out in a single Modbus register. The state bits can be configured so that all of the states which are of interest to the user are available in a minimum number of Modbus registers.

The state bits may be read out in the "Flex States" register array beginning at Modbus address 0900h. Sixteen states are packed into each register, with the lowest-numbered state in the lowest-order bit. There are 16 registers to accommodate the 256 state bits.

5.2.15 USER-DEFINABLE DISPLAYS

a) MAIN MENU

PATH: SETTINGS ⇨ PRODUCT SETUP ⇨⇩ USER-DEFINABLE DISPLAYS

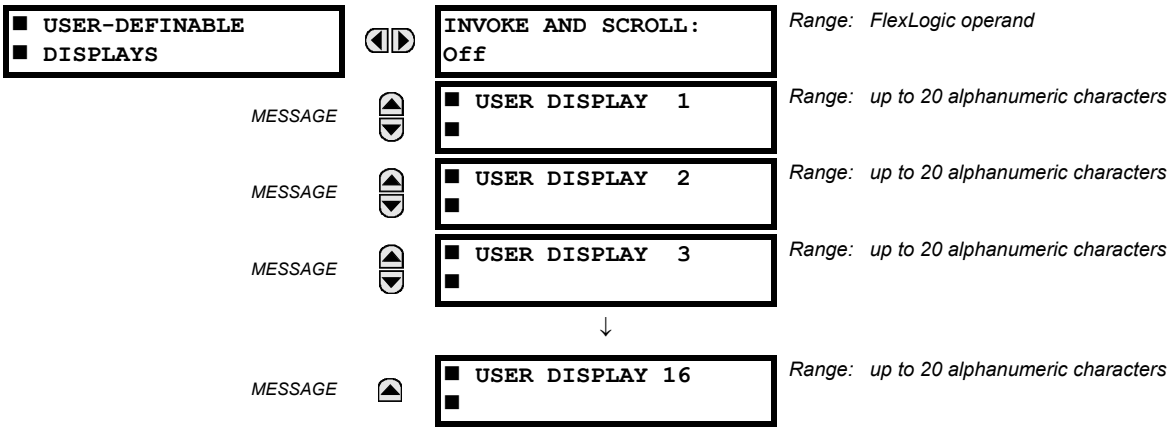

This menu provides a mechanism for manually creating up to 16 user-defined information displays in a convenient viewing sequence in the **USER DISPLAYS** menu (between the **TARGETS** and **ACTUAL VALUES** top-level menus). The sub-menus facilitate text entry and Modbus register data pointer options for defining the user display content.

Once programmed, the user-definable displays can be viewed in two ways.

- **KEYPAD**: Use the MENU key to select the **USER DISPLAYS** menu item to access the first user-definable display (note that only the programmed screens are displayed). The screens can be scrolled using the UP and DOWN keys. The display disappears after the default message time-out period specified by the **PRODUCT SETUP ⇨⇩ DISPLAY PROPERTIES ⇨⇩ DEFAULT MESSAGE TIMEOUT** setting.
- **USER-PROGRAMMABLE CONTROL INPUT**: The user-definable displays also respond to the **INVOKE AND SCROLL** setting. Any FlexLogic operand (in particular, the user-programmable pushbutton operands), can be used to navigate the programmed displays.

  On the rising edge of the configured operand (such as when the pushbutton is pressed), the displays are invoked by showing the last user-definable display shown during the previous activity. From this moment onward, the operand acts exactly as the down key and allows scrolling through the configured displays. The last display wraps up to the first one. The **INVOKE AND SCROLL** input and the DOWN key operate concurrently.

  When the default timer expires (set by the **DEFAULT MESSAGE TIMEOUT** setting), the relay will start to cycle through the user displays. The next activity of the **INVOKE AND SCROLL** input stops the cycling at the currently displayed user display, not at the first user-defined display. The **INVOKE AND SCROLL** pulses must last for at least 250 ms to take effect.

b) USER DISPLAY 1(16)

PATH: SETTINGS ⇨ PRODUCT SETUP ⇨⇩ USER-DEFINABLE DISPLAYS ⇨ USER DISPLAY 1(16)

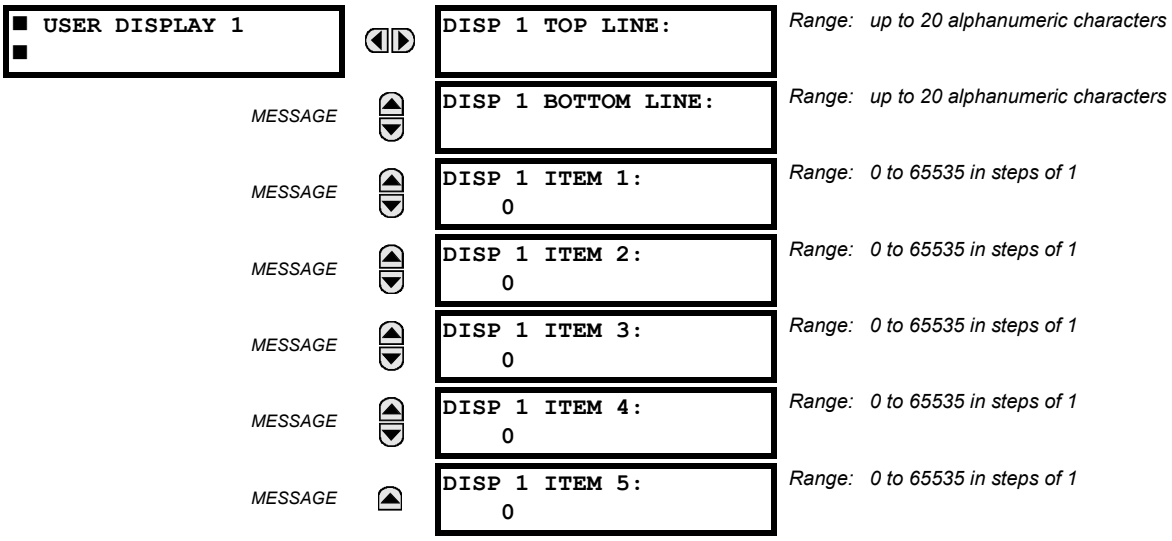

Any existing system display can be automatically copied into an available user display by selecting the existing display and pressing the ENTER key. The display will then prompt **ADD TO USER DISPLAY LIST?**. After selecting "Yes", a message indicates that the selected display has been added to the user display list. When this type of entry occurs, the sub-menus are automatically configured with the proper content – this content may subsequently be edited.

This menu is used to enter user-defined text and user-selected Modbus-registered data fields into the particular user display. Each user display consists of two 20-character lines (top and bottom). The tilde (~) character is used to mark the start of a data field – the length of the data field needs to be accounted for. Up to five separate data fields can be entered in a user display – the *n*th tilde (~) refers to the *n*th item.

A user display may be entered from the faceplate keypad or the EnerVista UR Setup interface (preferred for convenience). The following procedure shows how to enter text characters in the top and bottom lines from the faceplate keypad:

1. Select the line to be edited.
2. Press the decimal key to enter text edit mode.
3. Use either VALUE key to scroll through the characters. A space is selected like a character.
4. Press the decimal key to advance the cursor to the next position.
5. Repeat step 3 and continue entering characters until the desired text is displayed.
6. The HELP key may be pressed at any time for context sensitive help information.
7. Press the ENTER key to store the new settings.

To enter a numerical value for any of the five items (the *decimal form* of the selected Modbus address) from the faceplate keypad, use the number keypad. Use the value of "0" for any items not being used. Use the HELP key at any selected system display (setting, actual value, or command) which has a Modbus address, to view the *hexadecimal form* of the Modbus address, then manually convert it to decimal form before entering it (EnerVista UR Setup usage conveniently facilitates this conversion).

Use the MENU key to go to the user displays menu to view the user-defined content. The current user displays will show in sequence, changing every four seconds. While viewing a user display, press the ENTER key and then select the 'Yes" option to remove the display from the user display list. Use the MENU key again to exit the user displays menu.

An example of user display setup and result is shown below:

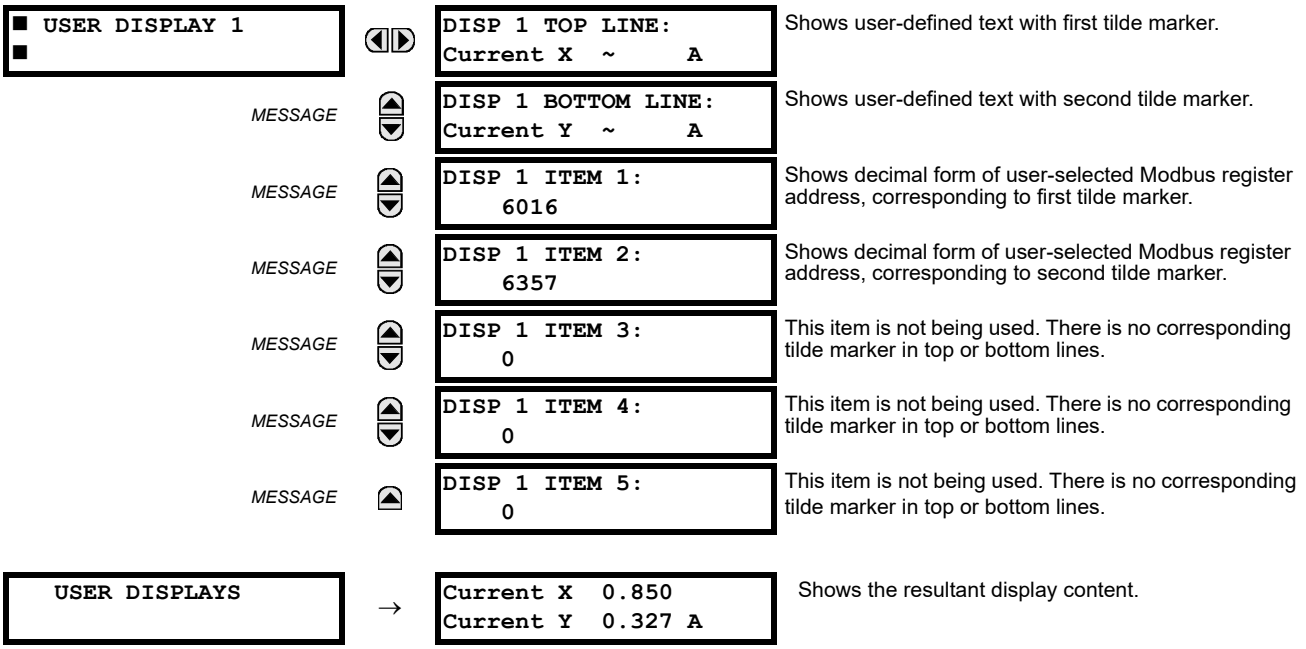

NOTE If the parameters for the top line and the bottom line items have the same units, then the unit is displayed on the bottom line only. The units are only displayed on both lines if the units specified both the top and bottom line items are different.

5.2.16 DIRECT INPUTS AND OUTPUTS

a) MAIN MENU

PATH: SETTINGS ⇨ PRODUCT SETUP ⇨⇩ DIRECT I/O

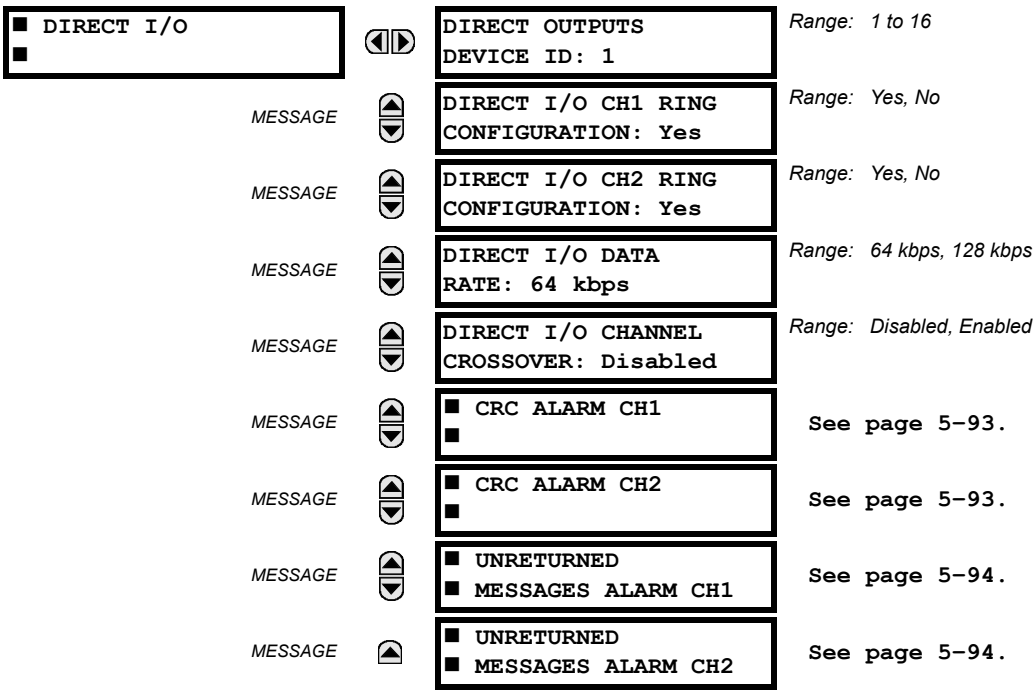

This option is available when an INTER-RELAY COMMUNICATIONS card is specified at the time of ordering.

Direct inputs and outputs are intended for exchange of status information (inputs and outputs) between UR-series relays connected directly via type 7 or type 2 digital communications cards. The mechanism is very similar to IEC 61850 GSSE, except that communications takes place over a non-switchable isolated network and is optimized for speed. On type 7 cards that support two channels, direct output messages are sent from both channels simultaneously. This effectively sends direct output messages both ways around a ring configuration. On type 7 cards that support one channel, direct output messages are sent only in one direction. Messages will be resent (forwarded) when it is determined that the message did not originate at the receiver.

For the direct I/Os to function properly, all UR devices sending I/Os using an Inter-Relay Communications card must have identical firmware revisions.

Direct output message timing is similar to GSSE message timing. Integrity messages (with no state changes) are sent at least every 1000 ms. Messages with state changes are sent within the main pass scanning the inputs and asserting the outputs unless the communication channel bandwidth has been exceeded. Two self-tests are performed and signaled by the following FlexLogic operands:

1. DIRECT RING BREAK (direct input/output ring break). This FlexLogic operand indicates that direct output messages sent from a UR-series relay are not being received back by the relay.
2. DIRECT DEVICE 1 OFF to DIRECT DEVICE 16 OFF (direct device offline). These FlexLogic operands indicate that direct output messages from at least one direct device are not being received.

Direct input and output settings are similar to remote input and output settings. The equivalent of the remote device name strings for direct inputs and outputs is the **DIRECT OUTPUT DEVICE ID**. The **DIRECT OUTPUT DEVICE ID** setting identifies the relay in all direct output messages. All UR-series IEDs in a ring should have unique numbers assigned. The IED ID is used to identify the sender of the direct input and output message.

If the direct input and output scheme is configured to operate in a ring (**DIRECT I/O CH1 RING CONFIGURATION** or **DIRECT I/O CH2 RING CONFIGURATION** is "Yes"), all direct output messages should be received back. If not, the direct input/output ring break self-test is triggered. The self-test error is signaled by the DIRECT RING BREAK FlexLogic operand.

Select the **DIRECT I/O DATA RATE** to match the data capabilities of the communications channel. All IEDs communicating over direct inputs and outputs must be set to the same data rate. UR-series IEDs equipped with dual-channel communications cards apply the same data rate to both channels. Delivery time for direct input and output messages is approximately 0.2 of a power system cycle at 128 kbps and 0.4 of a power system cycle at 64 kbps, per each 'bridge'.

Table 5–12: DIRECT INPUT AND OUTPUT DATA RATES

MODULE	CHANNEL	SUPPORTED DATA RATES
74	Channel 1	64 kbps
	Channel 2	64 kbps
7L	Channel 1	64 kbps, 128 kbps
	Channel 2	64 kbps, 128 kbps
7M	Channel 1	64 kbps, 128 kbps
	Channel 2	64 kbps, 128 kbps
7P	Channel 1	64 kbps, 128 kbps
	Channel 2	64 kbps, 128 kbps
7T	Channel 1	64 kbps, 128 kbps
7W	Channel 1	64 kbps, 128 kbps
	Channel 2	64 kbps, 128 kbps
7V	Channel 1	64 kbps, 128 kbps
	Channel 2	64 kbps, 128 kbps
2A	Channel 1	64 kbps
2B	Channel 1	64 kbps
	Channel 2	64 kbps
2G	Channel 1	128 kbps
2H	Channel 1	128 kbps
2I	Channel 1	64 kbps, 128 kbps
	Channel 2	64 kbps, 128 kbps
2J	Channel 1	64 kbps, 128 kbps
	Channel 2	64 kbps, 128 kbps
76	Channel 1	64 kbps
77	Channel 1	64 kbps
	Channel 2	64 kbps
75	Channel 1	64 kbps
	Channel 2	64 kbps
7E	Channel 1	64 kbps
	Channel 2	64 kbps
7F	Channel 1	64 kbps
	Channel 2	64 kbps
7G	Channel 1	64 kbps
	Channel 2	64 kbps
7Q	Channel 1	64 kbps
	Channel 2	64 kbps
7R	Channel 1	64 kbps
7S	Channel 1	64 kbps
	Channel 2	64 kbps

NOTE

The G.703 modules are fixed at 64 kbps. The **DIRECT I/O DATA RATE** setting is not applicable to these modules.

The **DIRECT I/O CHANNEL CROSSOVER** setting applies to C70s with dual-channel communication cards and allows crossing over messages from channel 1 to channel 2. This places all UR-series IEDs into one direct input and output network regardless of the physical media of the two communication channels.

The following application examples illustrate the basic concepts for direct input and output configuration. See the Inputs and Outputs section in this chapter for information on configuring FlexLogic operands (flags, bits) to be exchanged.

Example 1: Extending the input/output capabilities of a UR-series relay

Consider an application that requires additional quantities of contact inputs or output contacts or lines of programmable logic that exceed the capabilities of a single UR-series chassis. The problem is solved by adding an extra UR-series IED, such as the C30, to satisfy the additional input and output and programmable logic requirements. The two IEDs are connected via single-channel digital communication cards as shown in the figure below.

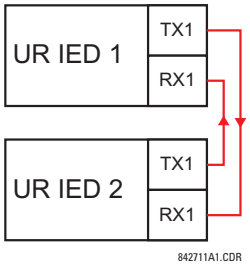

Figure 5–17: INPUT AND OUTPUT EXTENSION VIA DIRECT INPUTS AND OUTPUTS

In the above application, the following settings should be applied. For UR-series IED 1:

DIRECT OUTPUT DEVICE ID: "1"
DIRECT I/O CH1 RING CONFIGURATION: "Yes"
DIRECT I/O DATA RATE: "128 kbps"

For UR-series IED 2:

DIRECT OUTPUT DEVICE ID: "2"
DIRECT I/O CH1 RING CONFIGURATION: "Yes"
DIRECT I/O DATA RATE: "128 kbps"

The message delivery time is about 0.2 of power cycle in both ways (at 128 kbps); that is, from device 1 to device 2, and from device 2 to device 1. Different communications cards can be selected by the user for this back-to-back connection (for example: fiber, G.703, or RS422).

Example 2: Interlocking busbar protection

A simple interlocking busbar protection scheme could be accomplished by sending a blocking signal from downstream devices, say 2, 3, and 4, to the upstream device that monitors a single incomer of the busbar, as shown below.

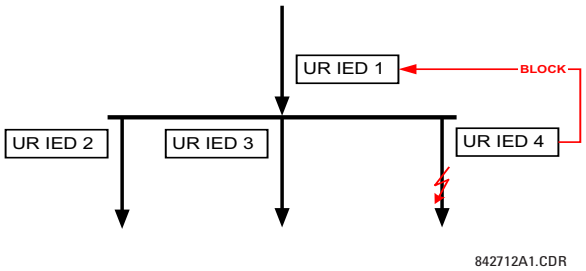

Figure 5–18: SAMPLE INTERLOCKING BUSBAR PROTECTION SCHEME

For increased reliability, a dual-ring configuration (shown below) is recommended for this application.

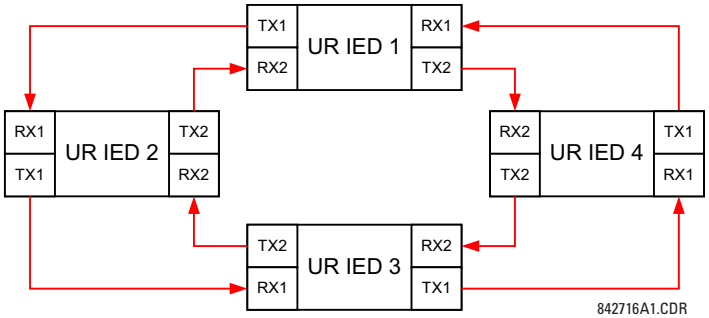

Figure 5–19: INTERLOCKING BUS PROTECTION SCHEME VIA DIRECT INPUTS/OUTPUTS

In the above application, the following settings should be applied. For UR-series IED 1:

DIRECT OUTPUT DEVICE ID: "1"
DIRECT I/O CH1 RING CONFIGURATION: "Yes"
DIRECT I/O CH2 RING CONFIGURATION: "Yes"

For UR-series IED 2:

DIRECT OUTPUT DEVICE ID: "2"
DIRECT I/O CH1 RING CONFIGURATION: "Yes"
DIRECT I/O CH2 RING CONFIGURATION: "Yes"

For UR-series IED 3:

DIRECT OUTPUT DEVICE ID: "3"
DIRECT I/O CH1 RING CONFIGURATION: "Yes"
DIRECT I/O CH2 RING CONFIGURATION: "Yes"

For UR-series IED 4:

DIRECT OUTPUT DEVICE ID: "4"
DIRECT I/O CH1 RING CONFIGURATION: "Yes"
DIRECT I/O CH2 RING CONFIGURATION: "Yes"

Message delivery time is approximately 0.2 of power system cycle (at 128 kbps) times number of 'bridges' between the origin and destination. Dual-ring configuration effectively reduces the maximum 'communications distance' by a factor of two.

In this configuration the following delivery times are expected (at 128 kbps) if both rings are healthy:

IED 1 to IED 2: 0.2 of power system cycle;
IED 1 to IED 3: 0.4 of power system cycle;
IED 1 to IED 4: 0.2 of power system cycle;
IED 2 to IED 3: 0.2 of power system cycle;
IED 2 to IED 4: 0.4 of power system cycle;
IED 3 to IED 4: 0.2 of power system cycle.

If one ring is broken (say TX2-RX2) the delivery times are as follows:

IED 1 to IED 2: 0.2 of power system cycle;
IED 1 to IED 3: 0.4 of power system cycle;
IED 1 to IED 4: 0.6 of power system cycle;
IED 2 to IED 3: 0.2 of power system cycle;
IED 2 to IED 4: 0.4 of power system cycle;
IED 3 to IED 4: 0.2 of power system cycle.

A coordinating timer for this bus protection scheme could be selected to cover the worst case scenario (0.4 of a power system cycle). Upon detecting a broken ring, the coordination time should be adaptively increased to 0.6 of a power system cycle. The complete application requires addressing a number of issues such as failure of both the communications rings, failure or out-of-service conditions of one of the relays, etc. Self-monitoring flags of the direct inputs and outputs feature would be primarily used to address these concerns.

Example 3: Pilot-Aided Schemes

Consider the three-terminal line protection application shown below:

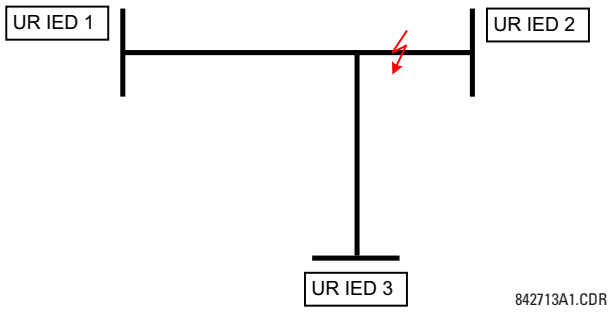

Figure 5–20: THREE-TERMINAL LINE APPLICATION

A permissive pilot-aided scheme could be implemented in a two-ring configuration as shown below (IEDs 1 and 2 constitute a first ring, while IEDs 2 and 3 constitute a second ring):

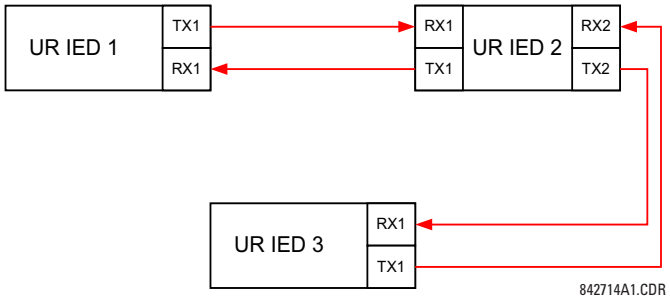

Figure 5–21: SINGLE-CHANNEL OPEN LOOP CONFIGURATION

In the above application, the following settings should be applied. For UR-series IED 1:

DIRECT OUTPUT DEVICE ID: "1"
DIRECT I/O CH1 RING CONFIGURATION: "Yes"
DIRECT I/O CH2 RING CONFIGURATION: "Yes"

For UR-series IED 2:

DIRECT OUTPUT DEVICE ID: "2"
DIRECT I/O CH1 RING CONFIGURATION: "Yes"
DIRECT I/O CH2 RING CONFIGURATION: "Yes"

For UR-series IED 3:

DIRECT OUTPUT DEVICE ID: "3"
DIRECT I/O CH1 RING CONFIGURATION: "Yes"
DIRECT I/O CH2 RING CONFIGURATION: "Yes"

In this configuration the following delivery times are expected (at 128 kbps):

IED 1 to IED 2: 0.2 of power system cycle;
IED 1 to IED 3: 0.5 of power system cycle;
IED 2 to IED 3: 0.2 of power system cycle.

In the above scheme, IEDs 1 and 3 do not communicate directly. IED 2 must be configured to forward the messages as explained in the Inputs and Outputs section. A blocking pilot-aided scheme should be implemented with more security and, ideally, faster message delivery time. This is accomplished using a dual-ring configuration as shown here.

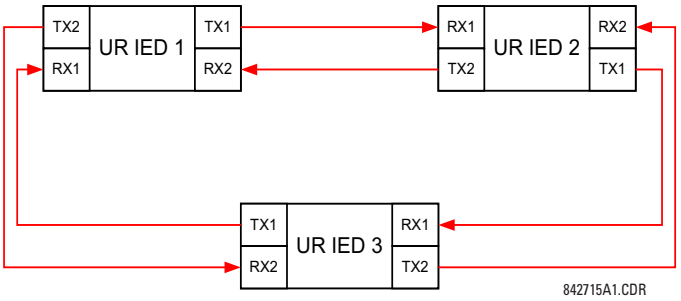

Figure 5–22: DUAL-CHANNEL CLOSED LOOP (DUAL-RING) CONFIGURATION

In the above application, the following settings should be applied. For UR-series IED 1:

DIRECT OUTPUT DEVICE ID: "1"
DIRECT I/O CH1 RING CONFIGURATION: "Yes"
DIRECT I/O CH2 RING CONFIGURATION: "Yes"

For UR-series IED 2:

DIRECT OUTPUT DEVICE ID: "2"
DIRECT I/O CH1 RING CONFIGURATION: "Yes"
DIRECT I/O CH2 RING CONFIGURATION: "Yes"

For UR-series IED 3:

DIRECT OUTPUT DEVICE ID: "3"
DIRECT I/O CH1 RING CONFIGURATION: "Yes"
DIRECT I/O CH2 RING CONFIGURATION: "Yes"

In this configuration the following delivery times are expected (at 128 kbps) if both the rings are healthy:

IED 1 to IED 2: 0.2 of power system cycle;
IED 1 to IED 3: 0.2 of power system cycle;
IED 2 to IED 3: 0.2 of power system cycle.

The two communications configurations could be applied to both permissive and blocking schemes. Speed, reliability and cost should be taken into account when selecting the required architecture.

b) CRC ALARM CH1(2)

PATH: SETTINGS ⇨ PRODUCT SETUP ⇨⇩ DIRECT I/O ⇨⇩ CRC ALARM CH1(2)

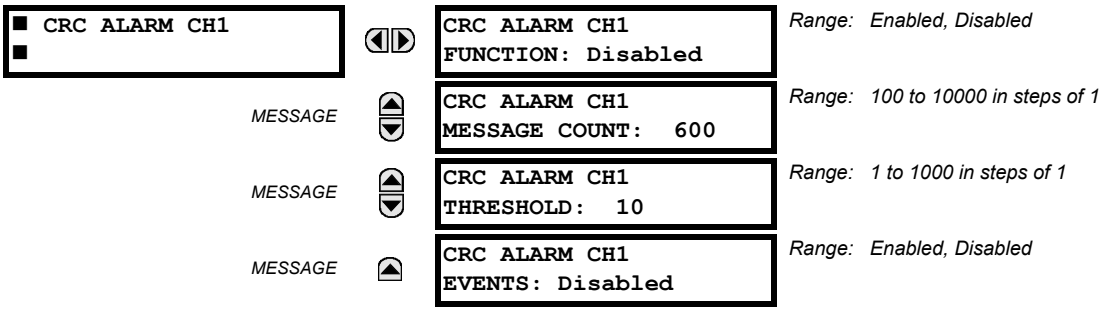

The C70 checks integrity of the incoming direct input and output messages using a 32-bit CRC. The CRC alarm function is available for monitoring the communication medium noise by tracking the rate of messages failing the CRC check. The monitoring function counts all incoming messages, including messages that failed the CRC check. A separate counter adds up messages that failed the CRC check. When the failed CRC counter reaches the user-defined level specified by the **CRC ALARM CH1 THRESHOLD** setting within the user-defined message count **CRC ALARM 1 CH1 COUNT**, the DIR IO CH1 CRC ALARM FlexLogic operand is set.

When the total message counter reaches the user-defined maximum specified by the **CRC ALARM CH1 MESSAGE COUNT** setting, both the counters reset and the monitoring process is restarted.

The operand shall be configured to drive an output contact, user-programmable LED, or selected communication-based output. Latching and acknowledging conditions - if required - should be programmed accordingly.

The CRC alarm function is available on a per-channel basis. The total number of direct input and output messages that failed the CRC check is available as the **ACTUAL VALUES ⇨ STATUS ⇨⇩ DIRECT INPUTS ⇨⇩ CRC FAIL COUNT CH1** actual value.

- *Message count and length of the monitoring window*: To monitor communications integrity, the relay sends 1 message per second (at 64 kbps) or 2 messages per second (128 kbps) even if there is no change in the direct outputs. For example, setting the **CRC ALARM CH1 MESSAGE COUNT** to "10000", corresponds a time window of about 160 minutes at 64 kbps and 80 minutes at 128 kbps. If the messages are sent faster as a result of direct outputs activity, the monitoring time interval will shorten. This should be taken into account when determining the **CRC ALARM CH1 MESSAGE COUNT** setting. For example, if the requirement is a maximum monitoring time interval of 10 minutes at 64 kbps, then the **CRC ALARM CH1 MESSAGE COUNT** should be set to $10 \times 60 \times 1 = 600$.
- *Correlation of failed CRC and bit error rate (BER)*: The CRC check may fail if one or more bits in a packet are corrupted. Therefore, an exact correlation between the CRC fail rate and the BER is not possible. Under certain assumptions an approximation can be made as follows. A direct input and output packet containing 20 bytes results in 160 bits of data being sent and therefore, a transmission of 63 packets is equivalent to 10,000 bits. A BER of 10^{-4} implies 1 bit error for every 10000 bits sent or received. Assuming the best case of only 1 bit error in a failed packet, having 1 failed packet for every 63 received is about equal to a BER of 10^{-4}.

c) UNRETURNED MESSAGES ALARM CH1(2)

PATH: SETTINGS ⇨ PRODUCT SETUP ⇨⇩ DIRECT I/O ⇨⇩ UNRETURNED MESSAGES ALARM CH1(2)

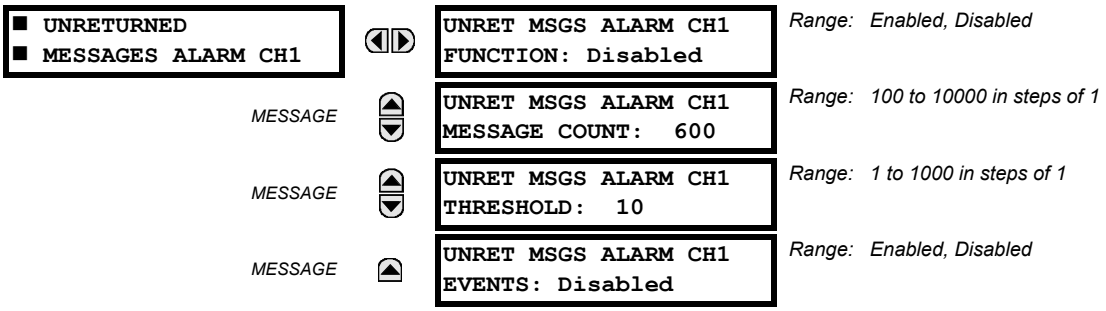

The C70 checks integrity of the direct input and output communication ring by counting unreturned messages. In the ring configuration, all messages originating at a given device should return within a pre-defined period of time. The unreturned messages alarm function is available for monitoring the integrity of the communication ring by tracking the rate of unreturned messages. This function counts all the outgoing messages and a separate counter adds the messages have failed to return. When the unreturned messages counter reaches the user-definable level specified by the **UNRET MSGS ALARM CH1 THRESHOLD** setting and within the user-defined message count **UNRET MSGS ALARM CH1 COUNT**, the DIR IO CH1 UNRET ALM FlexLogic operand is set.

When the total message counter reaches the user-defined maximum specified by the **UNRET MSGS ALARM CH1 MESSAGE COUNT** setting, both the counters reset and the monitoring process is restarted.

The operand shall be configured to drive an output contact, user-programmable LED, or selected communication-based output. Latching and acknowledging conditions, if required, should be programmed accordingly.

The unreturned messages alarm function is available on a per-channel basis and is active only in the ring configuration. The total number of unreturned input and output messages is available as the **ACTUAL VALUES ⇨ STATUS ⇨⇩ DIRECT INPUTS ⇨⇩ UNRETURNED MSG COUNT CH1** actual value.

PATH: SETTINGS ⇨ PRODUCT SETUP ⇨⇩ INSTALLATION

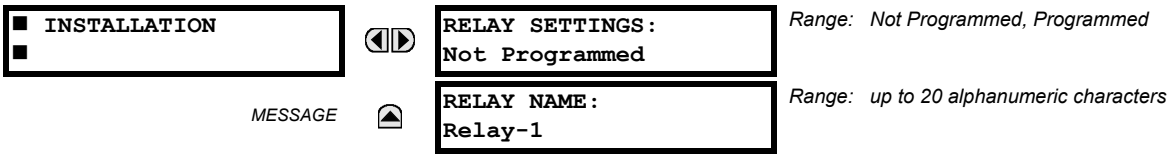

To safeguard against the installation of a relay without any entered settings, the unit will not allow signaling of any output relay until **RELAY SETTINGS** is set to "Programmed". This setting is defaulted to "Not Programmed" when at the factory. The **UNIT NOT PROGRAMMED** self-test error message is displayed until the relay is put into the "Programmed" state.

The **RELAY NAME** setting allows the user to uniquely identify a relay. This name will appear on generated reports.

5

5.3.1 REMOTE RESOURCES CONFIGURATION

When C70 is ordered with a process card module as a part of HardFiber system, then an additional **Remote Resources** menu tree is available in EnerVista UR Setup software to allow configuration of the HardFiber system.

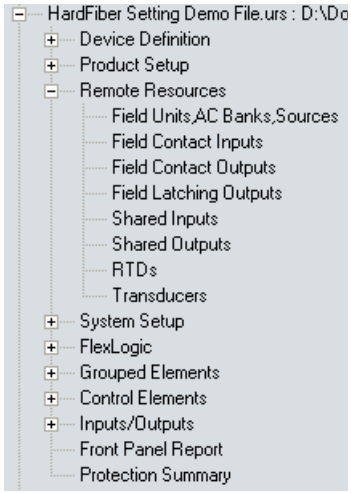

Figure 5–23: REMOTE RESOURCES CONFIGURATION MENU

The remote resources settings configure a C70 with a process bus module to work with HardFiber *Bricks*. Remote resources configuration is only available through the EnerVista UR Setup software, and is not available through the C70 front panel. A Brick provides eight AC measurements, along with contact inputs, DC analog inputs, and contact outputs, to be the remote interface to field equipment such as circuit breakers and transformers. The C70 with a process bus module has access to all of the capabilities of up to eight Bricks. Remote resources settings configure the point-to-point connection between specific fiber optic ports on the C70 process card and specific Brick. The relay is then configured to measure specific currents, voltages and contact inputs from those Bricks, and to control specific outputs.

The configuration process for remote resources is straightforward and consists of the following steps.

- *Configure the field units*. This establishes the point-to-point connection between a specific port on the relay process bus module, and a specific digital core on a specific Brick. This is a necessary first step in configuring a process bus relay.
- *Configure the AC banks*. This sets the primary and secondary quantities and connections for currents and voltages. AC bank configuration also provides a provision for redundant measurements for currents and voltages, a powerful reliability improvement possible with process bus.
- *Configure signal sources*. This functionality of the C70 has not changed other than the requirement to use currents and voltages established by AC bank configuration under the remote resources menu.
- *Configure field contact inputs, field contact outputs, RTDs, and transducers as required for the application's functionality*. These inputs and outputs are the physical interface to circuit breakers, transformers, and other equipment. They replace the traditional contact inputs and outputs located at the relay to virtually eliminate copper wiring.
- *Configure shared inputs and outputs as required for the application's functionality*. Shared inputs and outputs are distinct binary channels that provide high-speed protection quality signaling between relays through a Brick.

For additional information on how to configure a relay with a process bus module, see GE publication number GEK-113658: HardFiber Process Bus System Instruction Manual.

a) CURRENT BANKS

PATH: SETTINGS ⇨⇩ SYSTEM SETUP ⇨ AC INPUTS ⇨ CURRENT BANK F1(U5)

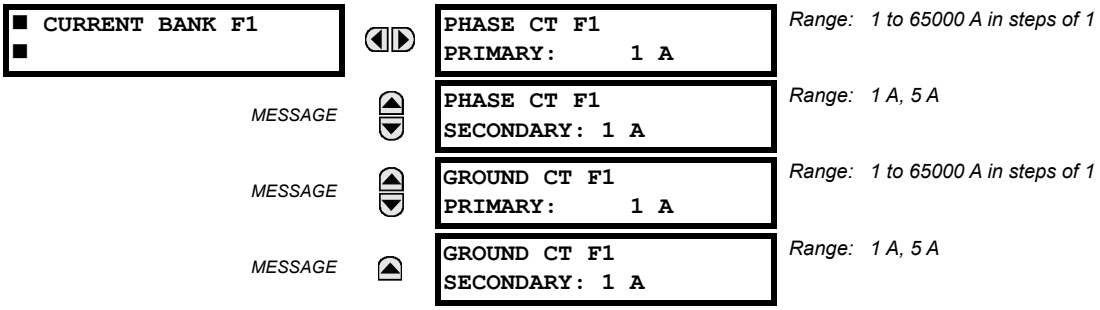

Six banks of phase and ground CTs can be set, where the current banks are denoted in the following format (*X* represents the module slot position letter):

Xa, where ***X*** = {**F**, **M**, **U**} and ***a*** = {**1**, **5**}

See the Introduction to AC Sources section at the beginning of this chapter for details.

These settings are critical for all features that have settings dependent on current measurements. When the relay is ordered, the CT module must be specified to include a standard or sensitive ground input. As the phase CTs are connected in wye (star), the calculated phasor sum of the three phase currents (IA + IB + IC = neutral current = 3I0) is used as the input for the neutral overcurrent elements. In addition, a zero-sequence (core balance) CT which senses current in all of the circuit primary conductors, or a CT in a neutral grounding conductor can also be used. For this configuration, the ground CT primary rating must be entered. To detect low level ground fault currents, the sensitive ground input can be used. In this case, the sensitive ground CT primary rating must be entered. Refer to chapter 3 for more details on CT connections.

Enter the rated CT primary current values. For both 1000:5 and 1000:1 CTs, the entry would be 1000. For correct operation, the CT secondary rating must match the setting (which must also correspond to the specific CT connections used).

The following example illustrates how multiple CT inputs (current banks) are summed as one source current. Given the following current banks:

- F1: CT bank with 500:1 ratio.
- F5: CT bank with 1000:1 ratio
- M1: CT bank with 800:1 ratio

The following rule applies:

$$\text{SRC 1} = \text{F1} + \text{F5} + \text{M1} \quad \textbf{(EQ 5.6)}$$

1 pu is the highest primary current. In this case, 1000 is entered and the secondary current from the 500:1 ratio CT will be adjusted to that created by a 1000:1 CT before summation. If a protection element is set up to act on SRC 1 currents, then a pickup level of 1 pu will operate on 1000 A primary.

The same rule applies for current sums from CTs with different secondary taps (5 A and 1 A).

b) VOLTAGE BANKS

PATH: SETTINGS ⇨⇩ SYSTEM SETUP ⇨ AC INPUTS ⇨⇩ VOLTAGE BANK F5(U5)

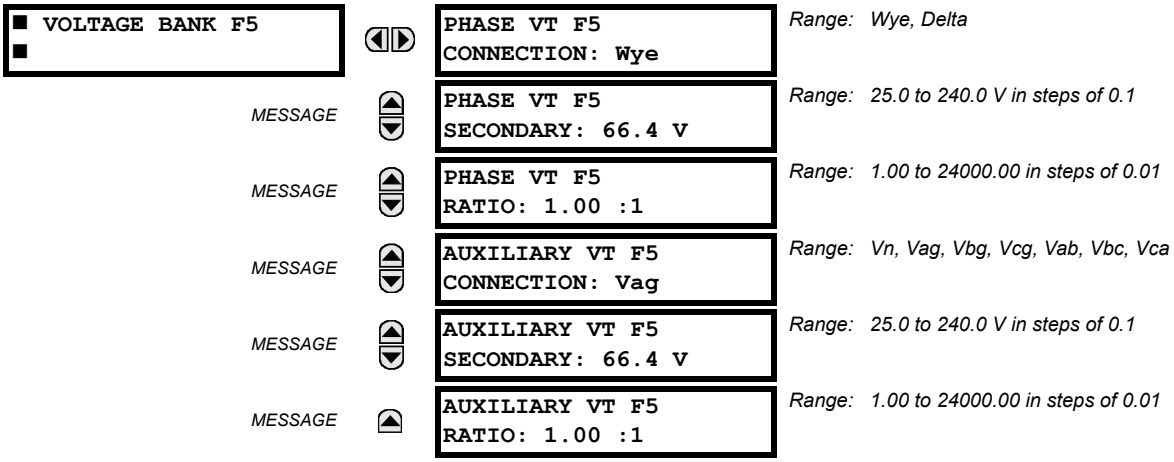

Three bank of phase/auxiliary VTs can be set, where voltage banks are denoted in the following format (*X* represents the module slot position letter):

Xa, where ***X*** = {**F**, **M**, **U**} and ***a*** = {**5**}

See the Introduction to AC Sources section at the beginning of this chapter for details.

With VTs installed, the relay can perform voltage measurements as well as power calculations. Enter the **PHASE VT F5 CONNECTION** made to the system as "Wye" or "Delta". An open-delta source VT connection would be entered as "Delta".

NOTE

The nominal **PHASE VT F5 SECONDARY** voltage setting is the voltage across the relay input terminals when nominal voltage is applied to the VT primary.

For example, on a system with a 13.8 kV nominal primary voltage and with a 14400:120 volt VT in a delta connection, the secondary voltage would be 115; that is, (13800 / 14400) × 120. For a wye connection, the voltage value entered must be the phase to neutral voltage which would be 115 / $\sqrt{3}$ = 66.4.

On a 14.4 kV system with a delta connection and a VT primary to secondary turns ratio of 14400:120, the voltage value entered would be 120; that is, 14400 / 120.

NOTE

If the **PHASE VT F5 CONNECTION** is set to "Delta", the relay does not calculate voltage harmonics.

5.4.2 POWER SYSTEM

PATH: SETTINGS ⇨⇩ SYSTEM SETUP ⇨⇩ POWER SYSTEM

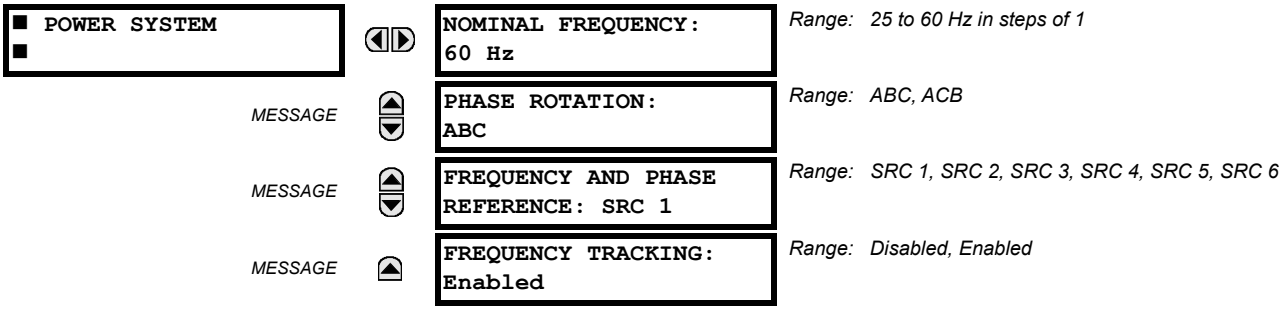

The power system **NOMINAL FREQUENCY** value is used as a default to set the digital sampling rate if the system frequency cannot be measured from available signals. This may happen if the signals are not present or are heavily distorted. Before reverting to the nominal frequency, the frequency tracking algorithm holds the last valid frequency measurement for a safe period of time while waiting for the signals to reappear or for the distortions to decay. After changing this setting, restart the relay using **Maintenance > Reboot Relay Command**.

The phase sequence of the power system is required to properly calculate sequence components and power parameters. The **PHASE ROTATION** setting matches the power system phase sequence. Note that this setting informs the relay of the actual system phase sequence, either ABC or ACB. CT and VT inputs on the relay, labeled as A, B, and C, must be connected to system phases A, B, and C for correct operation.

The **FREQUENCY AND PHASE REFERENCE** setting determines which signal source is used (and hence which AC signal) for phase angle reference. The AC signal used is prioritized based on the AC inputs that are configured for the signal source: phase voltages takes precedence, followed by auxiliary voltage, then phase currents, and finally ground current.

For three phase selection, phase A is used for angle referencing ($V_{\text{ANGLE REF}} = V_A$), while Clarke transformation of the phase signals is used for frequency metering and tracking ($V_{\text{FREQUENCY}} = (2V_A - V_B - V_C)/3$) for better performance during fault, open pole, and VT and CT fail conditions.

The phase reference and frequency tracking AC signals are selected based upon the Source configuration, regardless of whether or not a particular signal is actually applied to the relay.

Phase angle of the reference signal always displays zero degrees and all other phase angles are relative to this signal. If the pre-selected reference signal is not measurable at a given time, the phase angles are not referenced.

The phase angle referencing is done via a phase locked loop, which can synchronize independent UR-series relays if they have the same AC signal reference. This results in very precise correlation of phase angle indications between different UR-series relays.

NOTE

FREQUENCY TRACKING is set to **"**Disabled**"** only in unusual circumstances; consult the factory for special variable-frequency applications.

The frequency tracking feature functions only when the C70 is in the "Programmed" mode. If the C70 is "Not Programmed", then metering values are available but can exhibit significant errors.

PATH: SETTINGS ⇨⇩ SYSTEM SETUP ⇨⇩ SIGNAL SOURCES ⇨ SOURCE 1(6)

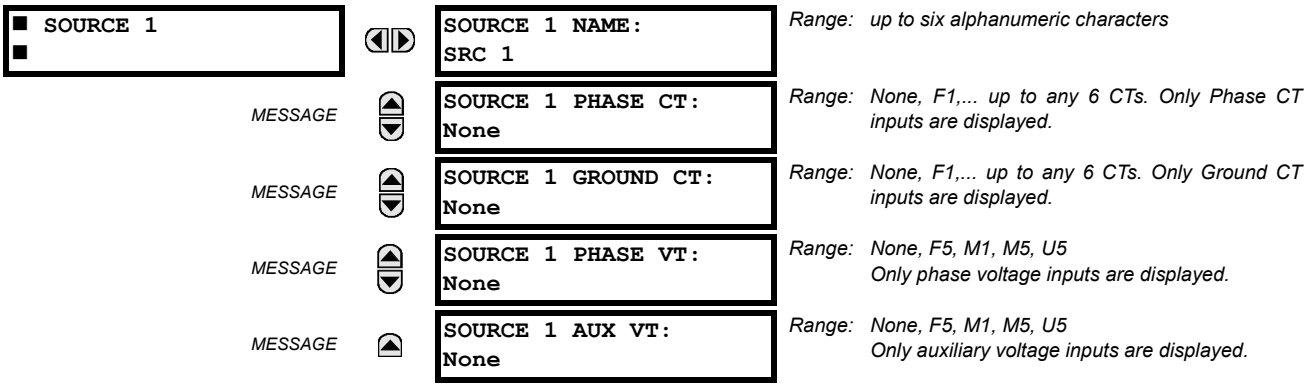

Identical menus are available for each source. The "SRC 1" text can be replaced by with a user-defined name appropriate for the associated source.

The first letter in the source identifier represents the module slot position. The number directly following this letter represents either the first bank of four channels (1, 2, 3, 4) called “1” or the second bank of four channels (5, 6, 7, 8) called “5” in a particular CT/VT module. See the Introduction to AC Sources section at the beginning of this chapter for details on this concept.

5

It is possible to select the sum of all CT combinations. The first channel displayed is the CT to which all others will be referred. For example, the selection “F1+F5” indicates the sum of each phase from channels “F1” and “F5”, scaled to whichever CT has the higher ratio. Selecting “None” hides the associated actual values.

The approach used to configure the AC sources consists of several steps; first step is to specify the information about each CT and VT input. For CT inputs, this is the nominal primary and secondary current. For VTs, this is the connection type, ratio and nominal secondary voltage. Once the inputs have been specified, the configuration for each source is entered, including specifying which CTs are summed together.

User selection of AC parameters for comparator elements:

CT/VT modules automatically calculate all current and voltage parameters from the available inputs. Users must select the specific input parameters to be measured by every element in the relevant settings menu. The internal design of the element specifies which type of parameter to use and provides a setting for source selection. In elements where the parameter may be either fundamental or RMS magnitude, such as phase time overcurrent, two settings are provided. One setting specifies the source, the second setting selects between fundamental phasor and RMS.

AC input actual values:

The calculated parameters associated with the configured voltage and current inputs are displayed in the current and voltage sections of actual values. Only the phasor quantities associated with the actual AC physical input channels will be displayed here. All parameters contained within a configured source are displayed in the sources section of the actual values.

Disturbance detectors (internal):

The disturbance detector (ANSI 50DD) element is a sensitive current disturbance detector that detects any disturbance on the protected system. The 50DD function is used directly in some elements in the relay, for example VT Fuse Failure detector or Fault Report. It can also be used to supervise current-based elements to prevent maloperation as a result of the wrong settings or external CT wiring problem. A disturbance detector is provided for each source.

The 50DD function responds to the changes in magnitude of the sequence currents. The disturbance detector scheme logic is as follows:

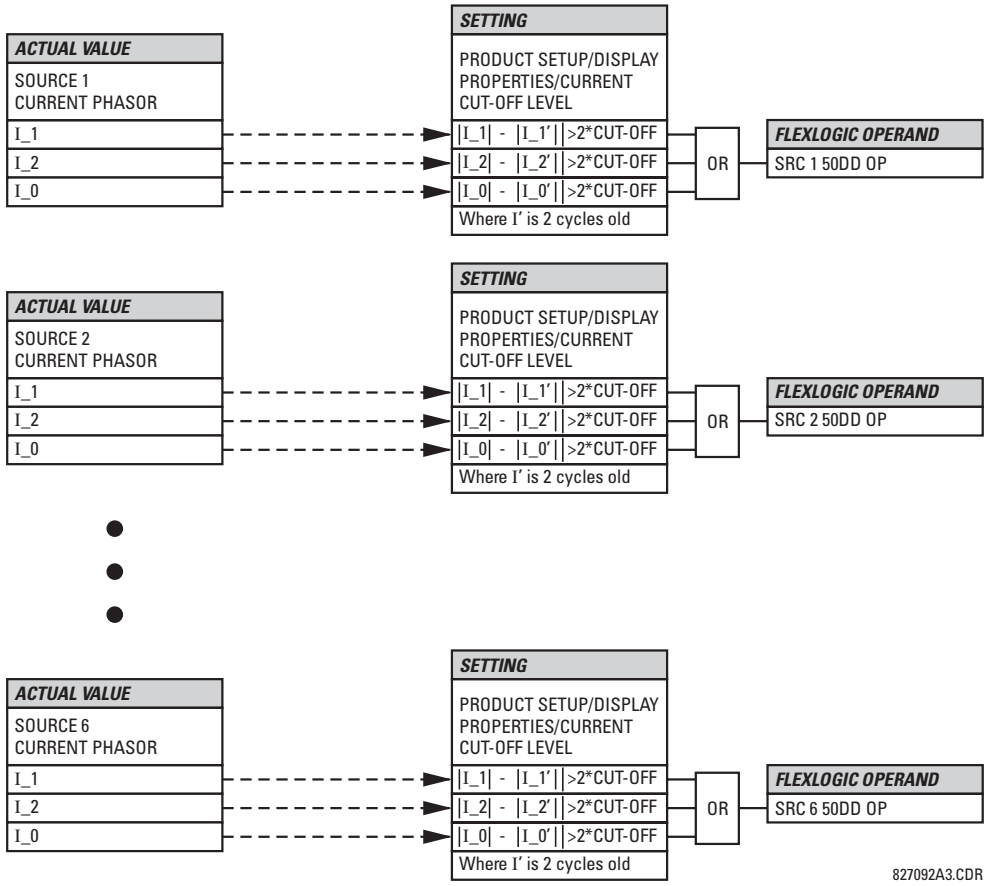

Figure 5–24: DISTURBANCE DETECTOR LOGIC DIAGRAM

The disturbance detector responds to the change in currents of twice the current cut-off level. The default cut-off threshold is 0.02 pu; thus by default the disturbance detector responds to a change of 0.04 pu. The metering sensitivity setting (**PRODUCT SETUP ⇨⇩ DISPLAY PROPERTIES ⇨⇩ CURRENT CUT-OFF LEVEL**) controls the sensitivity of the disturbance detector accordingly.

Example use of sources:

An example of the use of sources is shown in the diagram below. A relay could have the following hardware configuration:

INCREASING SLOT POSITION LETTER -->		
CT/VT MODULE 1	**CT/VT MODULE 2**	**CT/VT MODULE 3**
8 CTs	4 CTs, 4 VTs	4 CTs, 4 VTs

This configuration could be used on a two-winding transformer, with one winding connected into a breaker-and-a-half system. The following figure shows the arrangement of sources used to provide the functions required in this application, and the CT/VT inputs that are used to provide the data.

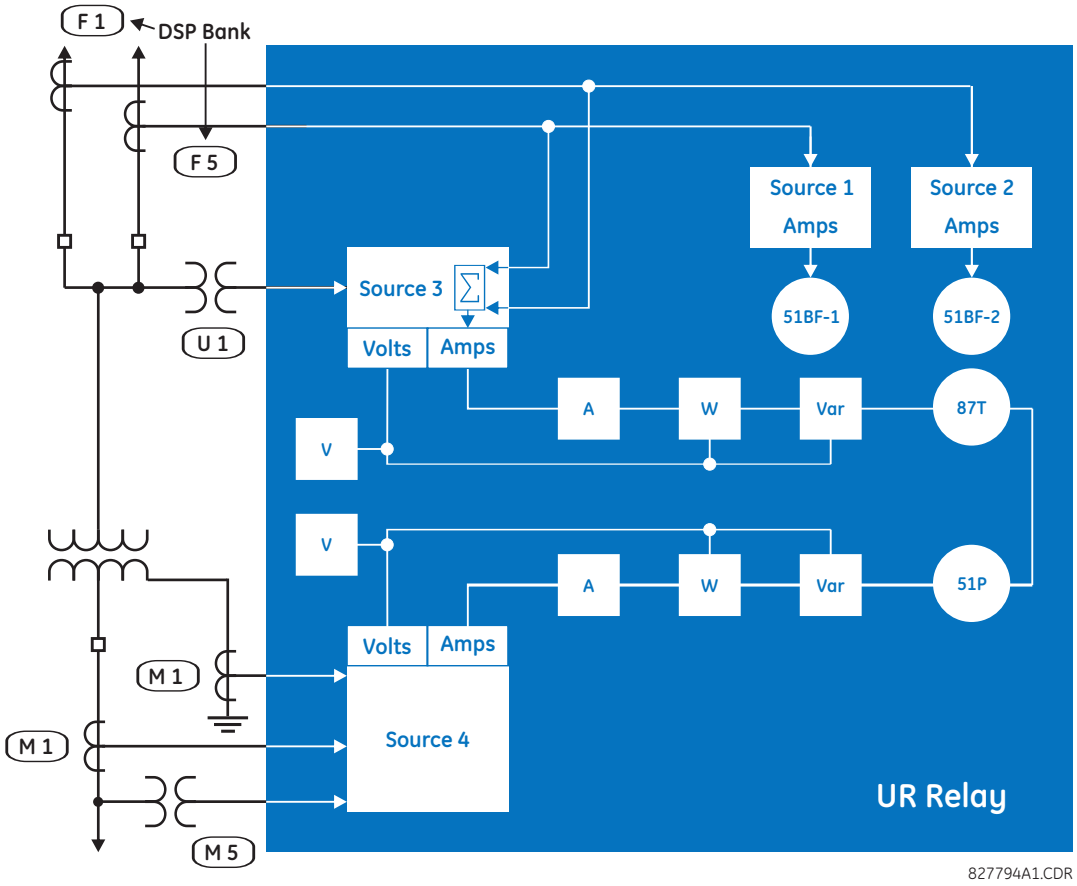

Figure 5–25: EXAMPLE USE OF SOURCES

	Y LV	D HV	AUX
	SRC 1	SRC 2	SRC 3
Phase CT	M1	F1+F5	None
Ground CT	M1	None	None
Phase VT	M5	None	None
Aux VT	None	None	U1

PATH: SETTINGS ⇨⇩ SYSTEM SETUP ⇨⇩ BREAKERS ⇨ BREAKER 1(6)

■ BREAKER 1 ■		BREAKER 1 FUNCTION: Disabled	Range: Disabled, Enabled
	MESSAGE	BREAKER1 PUSH BUTTON CONTROL: Disabled	Range: Disabled, Enabled
	MESSAGE	BREAKER 1 NAME: Bkr 1	Range: up to 6 alphanumeric characters
	MESSAGE	BREAKER 1 MODE: 3-Pole	Range: 3-Pole, 1-Pole
	MESSAGE	BREAKER 1 OPEN: Off	Range: FlexLogic operand
	MESSAGE	BREAKER 1 BLK OPEN: Off	Range: FlexLogic operand
	MESSAGE	BREAKER 1 CLOSE: Off	Range: FlexLogic operand
	MESSAGE	BREAKER 1 BLK CLOSE: Off	Range: FlexLogic operand
	MESSAGE	BREAKER1 ΦA/3P CLSD: Off	Range: FlexLogic operand
	MESSAGE	BREAKER1 ΦA/3P OPND: Off	Range: FlexLogic operand
	MESSAGE	BREAKER 1 ΦB CLOSED: Off	Range: FlexLogic operand
	MESSAGE	BREAKER 1 ΦB OPENED: Off	Range: FlexLogic operand
	MESSAGE	BREAKER 1 ΦC CLOSED: Off	Range: FlexLogic operand
	MESSAGE	BREAKER 1 ΦC OPENED: Off	Range: FlexLogic operand
	MESSAGE	BREAKER 1 Toperate: 0.070 s	Range: 0.000 to 65.535 s in steps of 0.001
	MESSAGE	BREAKER 1 EXT ALARM: Off	Range: FlexLogic operand
	MESSAGE	BREAKER 1 ALARM DELAY: 0.000 s	Range: 0.000 to 65.535 s in steps of 0.001
	MESSAGE	MANUAL CLOSE RECAL1 TIME: 0.000 s	Range: 0.000 to 65.535 s in steps of 0.001
	MESSAGE	BREAKER 1 OUT OF SV: Off	Range: FlexLogic operand
	MESSAGE	BREAKER 1 EVENTS: Disabled	Range: Disabled, Enabled

A description of the operation of the breaker control and status monitoring features is provided in chapter 4. Only information concerning programming of the associated settings is covered here. These features are provided for two or more breakers; a user may use only those portions of the design relevant to a single breaker, which must be breaker 1.

The number of breaker control elements is dependent on the number of CT/VT modules specified with the C70. The following settings are available for each breaker control element.

- **BREAKER 1 FUNCTION:** This setting enables and disables the operation of the breaker control feature.
- **BREAKER1 PUSH BUTTON CONTROL:** Set to "Enable" to allow faceplate push button operations.
- **BREAKER 1 NAME:** Assign a user-defined name (up to six characters) to the breaker. This name will be used in flash messages related to breaker 1.
- **BREAKER 1 MODE:** This setting selects "3-Pole" mode, where all breaker poles are operated simultaneously, or "1-Pole" mode where all breaker poles are operated either independently or simultaneously.
- **BREAKER 1 OPEN:** This setting selects an operand that creates a programmable signal to operate an output relay to open breaker 1.
- **BREAKER 1 BLK OPEN**: This setting selects an operand that prevents opening of the breaker. This setting can be used for select-before-operate functionality or to block operation from a panel switch or from SCADA.
- **BREAKER 1 CLOSE:** This setting selects an operand that creates a programmable signal to operate an output relay to close breaker 1.
- **BREAKER 1 BLK CLOSE**: This setting selects an operand that prevents closing of the breaker. This setting can be used for select-before-operate functionality or to block operation from a panel switch or from SCADA.
- **BREAKER1 ΦA/3P CLOSED:** This setting selects an operand, usually a contact input connected to a breaker auxiliary position tracking mechanism. This input should be a normally-open 52/a status input to create a logic 1 when the breaker is closed. If the **BREAKER 1 MODE** setting is selected as "3-Pole", this setting selects a single input as the operand used to track the breaker open or closed position. If the mode is selected as "1-Pole", the input mentioned above is used to track phase A and the **BREAKER 1 ΦB** and **BREAKER 1 ΦC** settings select operands to track phases B and C, respectively.
- **BREAKER1 ΦA/3P OPND:** This setting selects an operand, usually a contact input, that should be a normally-closed 52/b status input to create a logic 1 when the breaker is open. If a separate 52/b contact input is not available, then the inverted BREAKER 1 CLOSED status signal can be used.
- **BREAKER 1 ΦB CLOSED:** If the mode is selected as three-pole, this setting has no function. If the mode is selected as single-pole, this input is used to track the breaker phase B closed position as above for phase A.
- **BREAKER 1 ΦB OPENED:** If the mode is selected as three-pole, this setting has no function. If the mode is selected as single-pole, this input is used to track the breaker phase B opened position as above for phase A.
- **BREAKER 1 ΦC CLOSED:** If the mode is selected as three-pole, this setting has no function. If the mode is selected as single-pole, this input is used to track the breaker phase C closed position as above for phase A.
- **BREAKER 1 ΦC OPENED:** If the mode is selected as three-pole, this setting has no function. If the mode is selected as single-pole, this input is used to track the breaker phase C opened position as above for phase A.
- **BREAKER 1 TOPERATE**: This setting specifies the required interval to overcome transient disagreement between the 52/a and 52/b auxiliary contacts during breaker operation. If transient disagreement still exists after this time has expired, the BREAKER 1 BAD STATUS FlexLogic operand is asserted from alarm or blocking purposes.
- **BREAKER 1 EXT ALARM:** This setting selects an operand, usually an external contact input, connected to a breaker alarm reporting contact.
- **BREAKER 1 ALARM DELAY:** This setting specifies the delay interval during which a disagreement of status among the three-pole position tracking operands will not declare a pole disagreement. This allows for non-simultaneous operation of the poles.
- **MANUAL CLOSE RECAL1 TIME:** This setting specifies the interval required to maintain setting changes in effect after an operator has initiated a manual close command to operate a circuit breaker.
- **BREAKER 1 OUT OF SV:** Selects an operand indicating that breaker 1 is out-of-service.

NOTE

IEC 61850 functionality is permitted when the C70 is in "Programmed" mode and not in the local control mode.

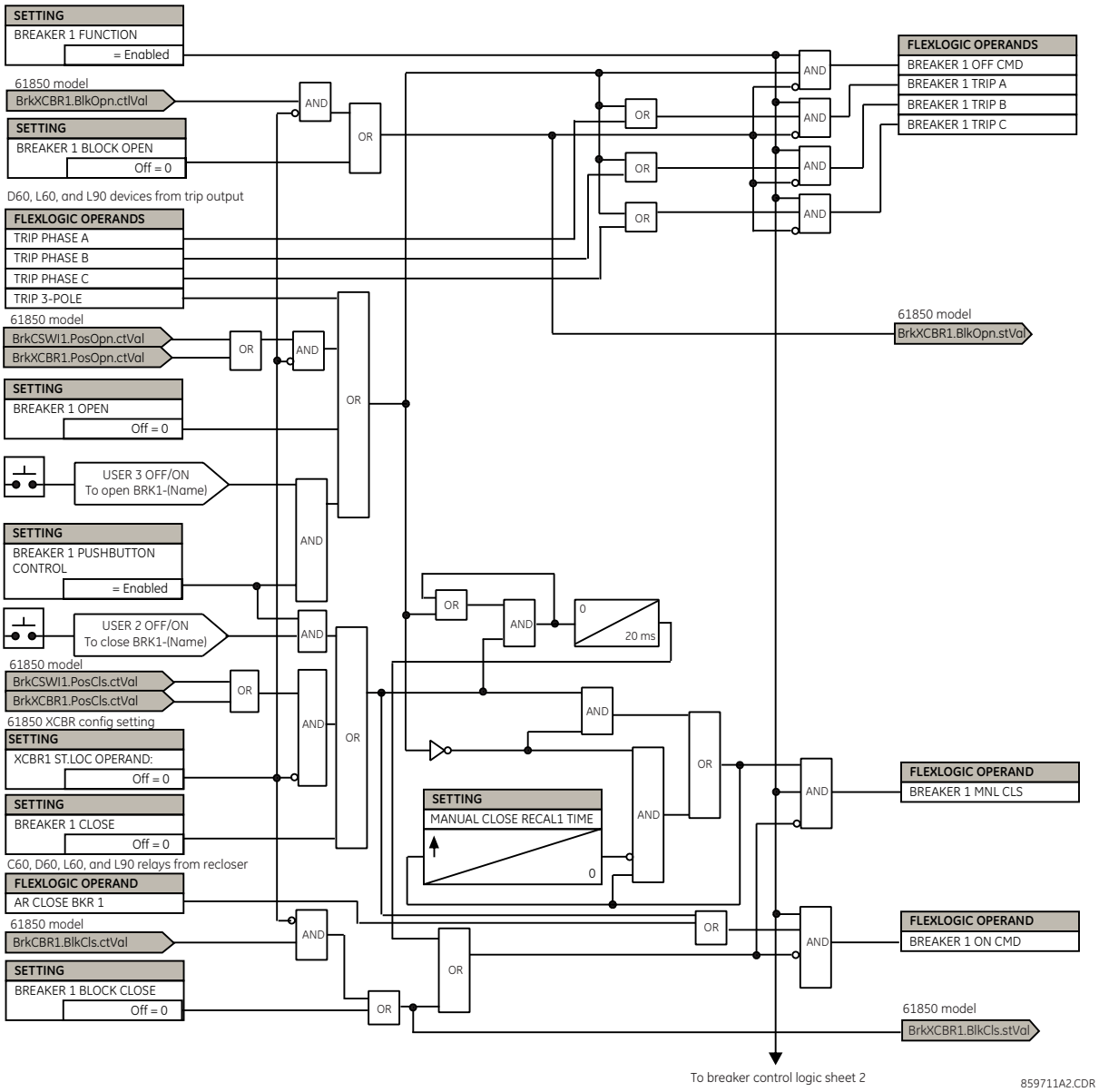

Figure 5–26: DUAL BREAKER CONTROL SCHEME LOGIC (Sheet 1 of 2)

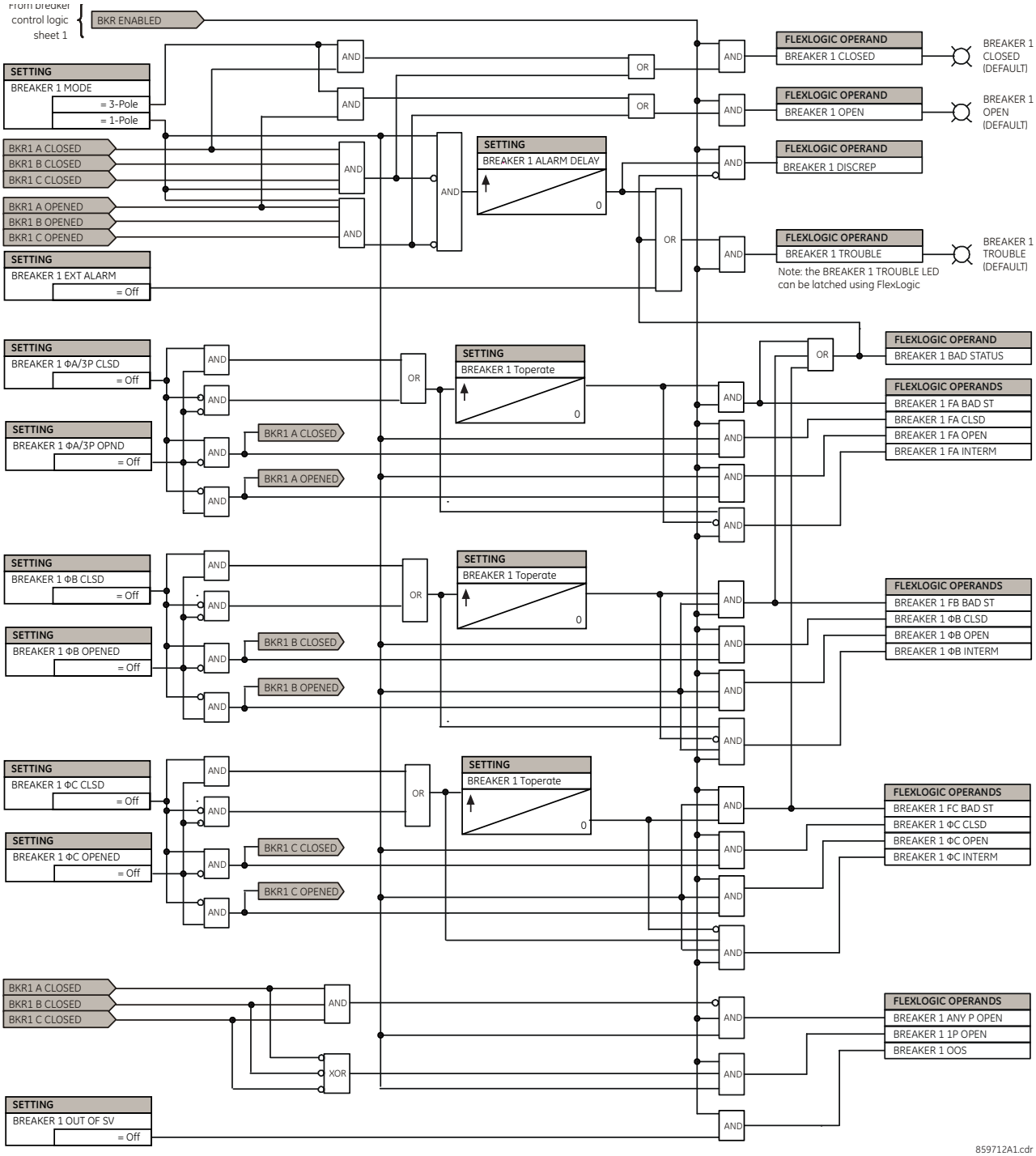

Figure 5–27: DUAL BREAKER CONTROL SCHEME LOGIC (Sheet 2 of 2)

The breaker element has direct hard-coded connections to IEC 61850 model as shown in the logic diagram. This allows remote open/close operation of each breaker, using either CSWI or XCBR IEC 61850 logical nodes. IEC 61850 select-before-operate functionality, local/remote switch functionality along with a blocking of open/close commands are provided. Note that IEC 61850 commands are event-driven and dwell time for these is one protection pass only. If you want to maintain the close/open command for a certain time, do so either on the contact outputs using the "Seal-in" setting or in FlexLogic.

PATH: SETTINGS ⇨⇩ SYSTEM SETUP ⇨⇩ SWITCHES ⇨ SWITCH 1(24)

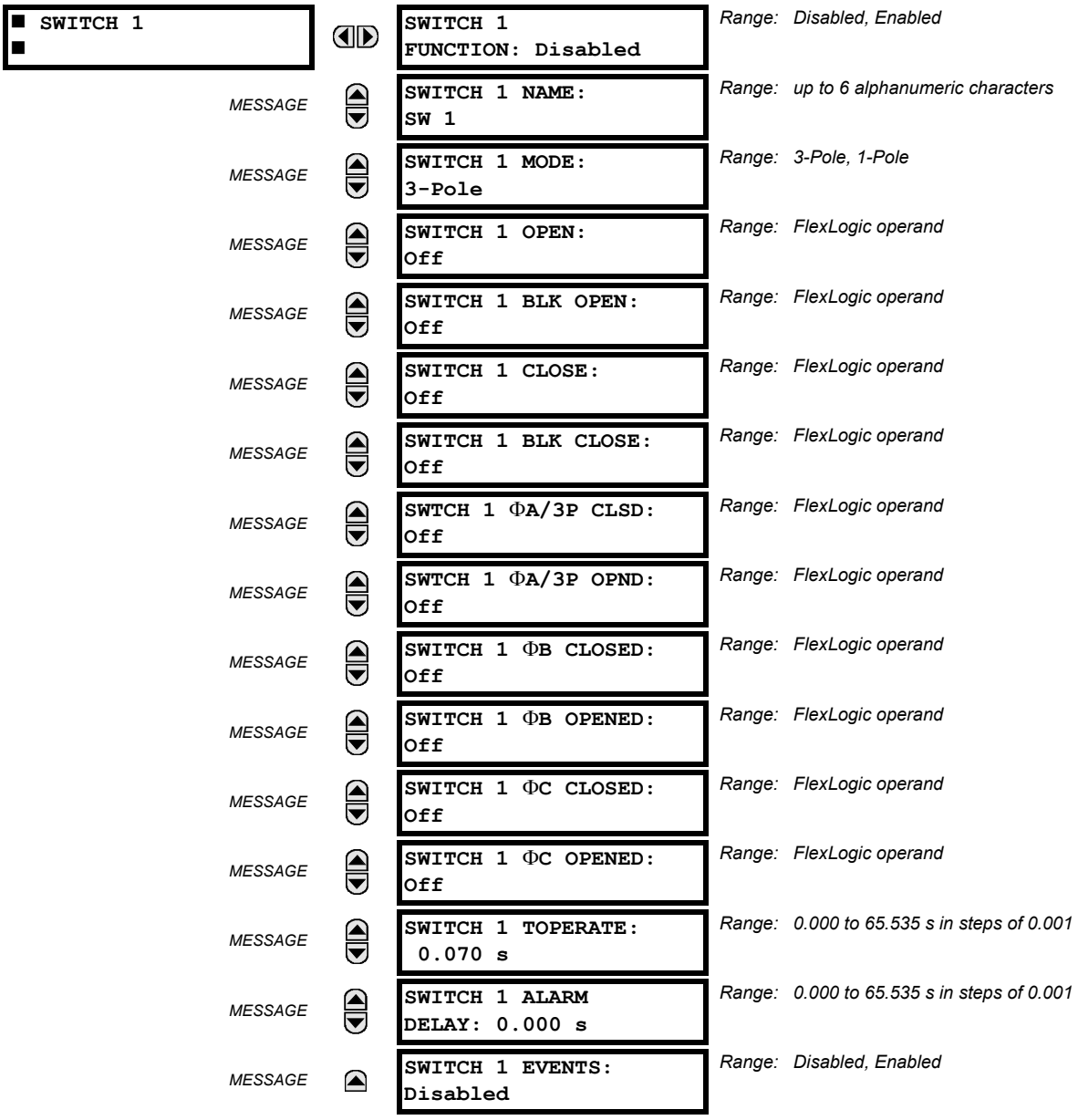

The disconnect switch control element contains the auxiliary logic for status and serves as the interface for opening and closing of disconnect switches from SCADA or through the front panel interface. The disconnect switch control element can be used to create interlocking functionality. For greater security in determination of the switch pole position, both the 89/a and 89/b auxiliary contacts are used with reporting of the discrepancy between them. The number of available disconnect switches is four per breaker.

To use this element, configure the contact outputs that open and close the disconnect switch to use FlexLogic operands SWITCH 1 OFF CMD and SWITCH 1 ON CMD, and configure the disconnect switch control element's inputs as outlined here.

- **SWITCH 1 FUNCTION:** This setting enables and disables the operation of the disconnect switch element.
- **SWITCH 1 NAME:** Assign a user-defined name (up to six characters) to the disconnect switch. This name will be used in flash messages related to disconnect switch 1.

- **SWITCH 1 MODE:** This setting selects “3-Pole” mode, where disconnect switch poles have a single common auxiliary switch, or “1-Pole” mode where each disconnect switch pole has its own auxiliary switch.
- **SWITCH 1 OPEN:** This setting selects an operand that when activated, and unless blocked, initiates the disconnect switch 1 open command.
- **SWITCH 1 BLK OPEN**: This setting selects an operand that prevents initiation of the disconnect switch 1 command. This setting can be used for blocking disconnect switch opening for instance when switchyard monitoring indicates current exceeding the switch's interrupting rating can be flowing through the switch.
- **SWITCH 1 CLOSE:** This setting selects an operand that when activated, and unless blocked, initiates the disconnect switch 1 close command.
- **SWITCH 1 BLK CLOSE**: This setting selects an operand that prevents initiation of disconnect switch 1 close commands. This setting can be used for blocking disconnect switch closing, for instance to prevent closing into a closed ground switch.
- **SWTCH 1 ΦA/3P CLSD:** This setting selects an operand, usually a contact input connected to a disconnect switch auxiliary position tracking mechanism. This input is for a normally-open 89/a status input that creates a logic 1 when the disconnect switch is closed. If the **SWITCH 1 MODE** setting is selected as “3-Pole”, this setting selects a single 89/a input as the operand used to track the disconnect switch open or closed position. If the mode is selected as “1-Pole”, the input mentioned above is used to track phase A and the **SWITCH 1 ΦB** and **SWITCH 1 ΦC** settings select operands to track phases B and C, respectively.
- **SWTCH 1 ΦA/3P OPND:** This setting selects an operand, usually a contact input, that is for a normally-closed 89/b status input that creates a logic 1 when the disconnect switch is open. If a separate 89/b contact input is not available, then an inverted 89/a status signal can be used.
- **SWITCH 1 ΦB CLOSED:** If the mode is selected as three-pole, this setting has no function. If the mode is selected as single-pole, this input is used to track the disconnect switch phase B closed position as above for phase A.
- **SWITCH 1 ΦB OPENED:** If the mode is selected as three-pole, this setting has no function. If the mode is selected as single-pole, this input is used to track the disconnect switch phase B opened position as above for phase A.
- **SWITCH 1 ΦC CLOSED:** If the mode is selected as three-pole, this setting has no function. If the mode is selected as single-pole, this input is used to track the disconnect switch phase C closed position as above for phase A.
- **SWITCH 1 ΦC OPENED:** If the mode is selected as three-pole, this setting has no function. If the mode is selected as single-pole, this input is used to track the disconnect switch phase C opened position as above for phase A.
- **SWITCH 1 TOPERATE**: This setting specifies the required interval to overcome transient disagreement between the 89/a and 89/b auxiliary contacts during disconnect switch operation. If transient disagreement still exists after this time has expired, the SWITCH 1 BAD STATUS FlexLogic operand is asserted for alarm or blocking purposes.
- **SWITCH 1 ALARM DELAY:** This setting specifies the delay interval during which a disagreement of status among the pole position tracking operands will not declare a pole disagreement. This allows for non-simultaneous operation of the poles.

NOTE

IEC 61850 functionality is permitted when the C70 is in “Programmed” mode and not in the local control mode.

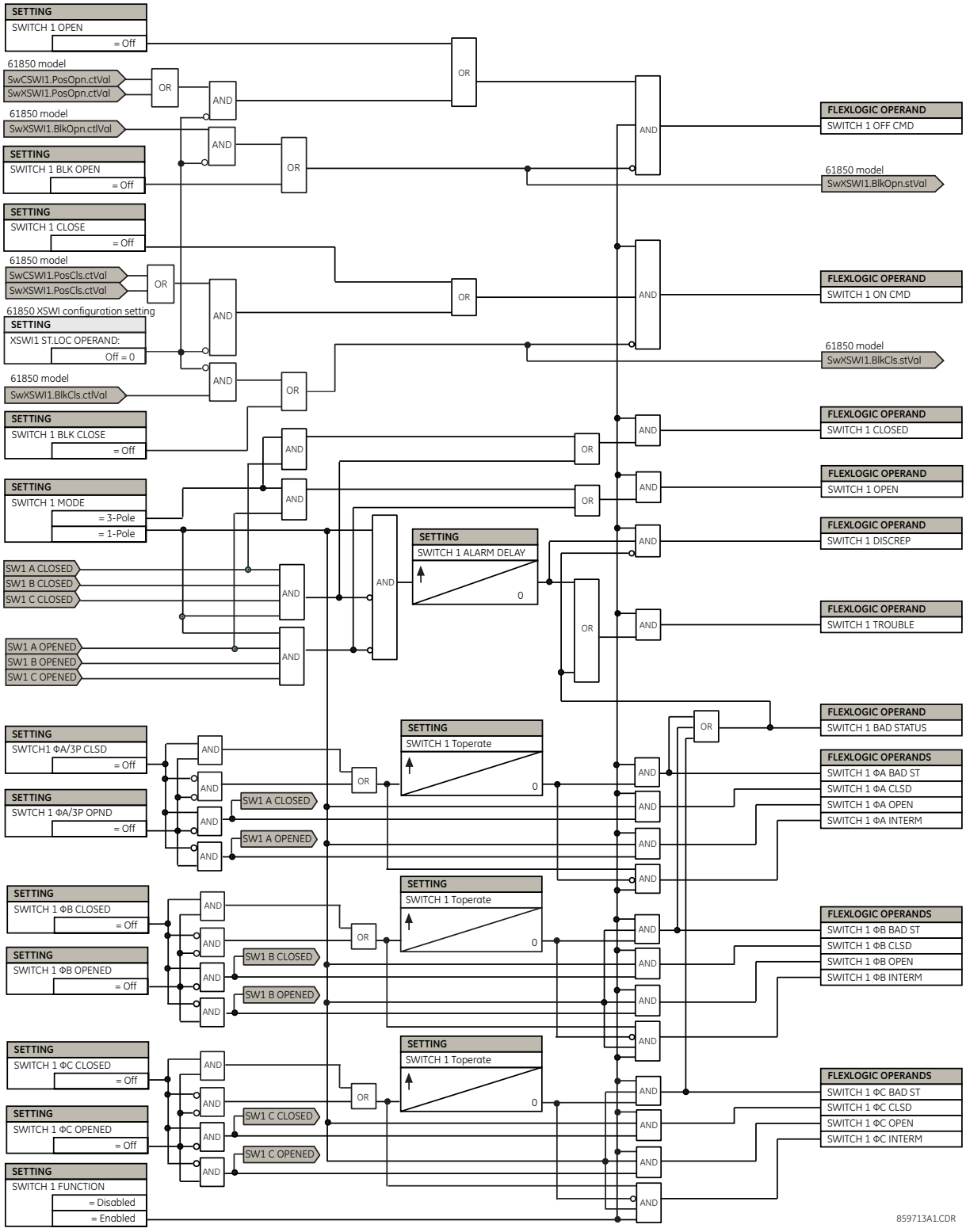

Figure 5–28: DISCONNECT SWITCH SCHEME LOGIC

The switch element has direct hard-coded connections to IEC 61850 model as shown in the logic diagram. This allows remote open/close operation of each switch, using either CSWI or XSWI IEC 61850 logical nodes. IEC 61850 select-before-operate functionality, local/remote switch functionality along with a blocking open/close commands are provided. Note that IEC 61850 commands are event-driven and dwell time for these is one protection pass only. If you want to maintain close/open command for a certain time, do so either on the contact outputs using the "Seal-in" setting or in FlexLogic.

5.4.6 FLEXCURVES

a) SETTINGS

PATH: SETTINGS ⇨⇩ SYSTEM SETUP ⇨⇩ FLEXCURVES ⇨ FLEXCURVE A(D)

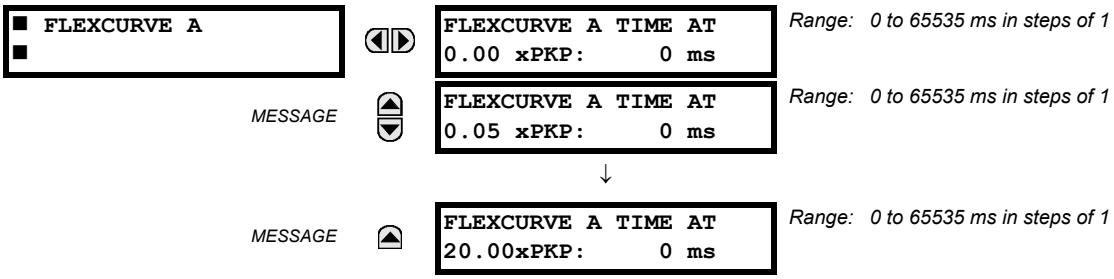

FlexCurves A through D have settings for entering times to reset and operate at the following pickup levels: 0.00 to 0.98 and 1.03 to 20.00. This data is converted into two continuous curves by linear interpolation between data points. To enter a custom FlexCurve, enter the reset and operate times (using the VALUE keys) for each selected pickup point (using the MESSAGE UP/DOWN keys) for the desired protection curve (A, B, C, or D).

5

Table 5–13: FLEXCURVE TABLE

RESET	TIME MS	RESET	TIME MS	OPERATE	TIME MS	OPERATE	TIME MS	OPERATE	TIME MS	OPERATE	TIME MS
0.00		0.68		1.03		2.9		4.9		10.5	
0.05		0.70		1.05		3.0		5.0		11.0	
0.10		0.72		1.1		3.1		5.1		11.5	
0.15		0.74		1.2		3.2		5.2		12.0	
0.20		0.76		1.3		3.3		5.3		12.5	
0.25		0.78		1.4		3.4		5.4		13.0	
0.30		0.80		1.5		3.5		5.5		13.5	
0.35		0.82		1.6		3.6		5.6		14.0	
0.40		0.84		1.7		3.7		5.7		14.5	
0.45		0.86		1.8		3.8		5.8		15.0	
0.48		0.88		1.9		3.9		5.9		15.5	
0.50		0.90		2.0		4.0		6.0		16.0	
0.52		0.91		2.1		4.1		6.5		16.5	
0.54		0.92		2.2		4.2		7.0		17.0	
0.56		0.93		2.3		4.3		7.5		17.5	
0.58		0.94		2.4		4.4		8.0		18.0	
0.60		0.95		2.5		4.5		8.5		18.5	
0.62		0.96		2.6		4.6		9.0		19.0	
0.64		0.97		2.7		4.7		9.5		19.5	
0.66		0.98		2.8		4.8		10.0		20.0	

NOTE

The relay using a given FlexCurve applies linear approximation for times between the user-entered points. Special care must be applied when setting the two points that are close to the multiple of pickup of 1; that is, 0.98 pu and 1.03 pu. It is recommended to set the two times to a similar value; otherwise, the linear approximation may result in undesired behavior for the operating quantity that is close to 1.00 pu.

b) FLEXCURVE CONFIGURATION WITH ENERVISTA UR SETUP

The EnerVista UR Setup software allows for easy configuration and management of FlexCurves and their associated data points. Prospective FlexCurves can be configured from a selection of standard curves to provide the best approximate fit, then specific data points can be edited afterwards. Alternately, curve data can be imported from a specified file (.csv format) by selecting the **Import Data From** EnerVista UR Setup setting.

Curves and data can be exported, viewed, and cleared by clicking the appropriate buttons. FlexCurves are customized by editing the operating time (ms) values at pre-defined per-unit current multiples. Note that the pickup multiples start at zero (implying the "reset time"), operating time below pickup, and operating time above pickup.

c) RECLOSER CURVE EDITING

Recloser curve selection is special in that recloser curves can be shaped into a composite curve with a minimum response time and a fixed time above a specified pickup multiples. There are 41 recloser curve types supported. These definite operating times are useful to coordinate operating times, typically at higher currents and where upstream and downstream pro-

tective devices have different operating characteristics. The recloser curve configuration window shown below appears when the Initialize From EnerVista UR Setup setting is set to “Recloser Curve” and the **Initialize FlexCurve** button is clicked.

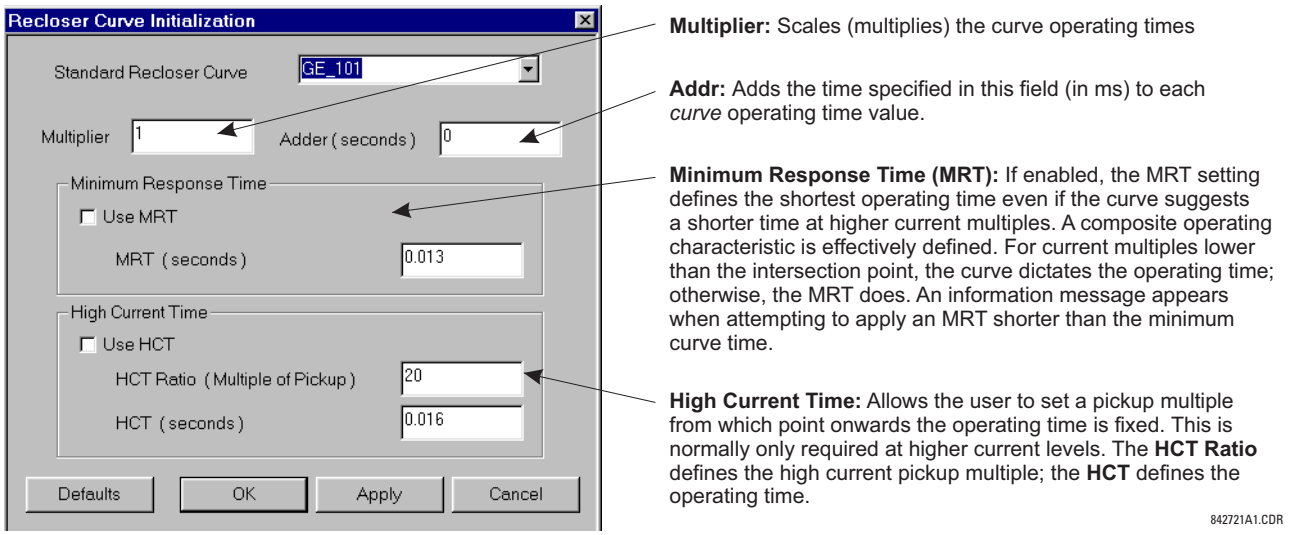

Figure 5–29: RECLOSER CURVE INITIALIZATION

NOTE

The multiplier and adder settings only affect the curve portion of the characteristic and not the MRT and HCT settings. The HCT settings override the MRT settings for multiples of pickup greater than the HCT ratio.

d) EXAMPLE

A composite curve can be created from the GE_111 standard with MRT = 200 ms and HCT initially disabled and then enabled at eight times pickup with an operating time of 30 ms. At approximately four times pickup, the curve operating time is equal to the MRT and from then onwards the operating time remains at 200 ms (see below).

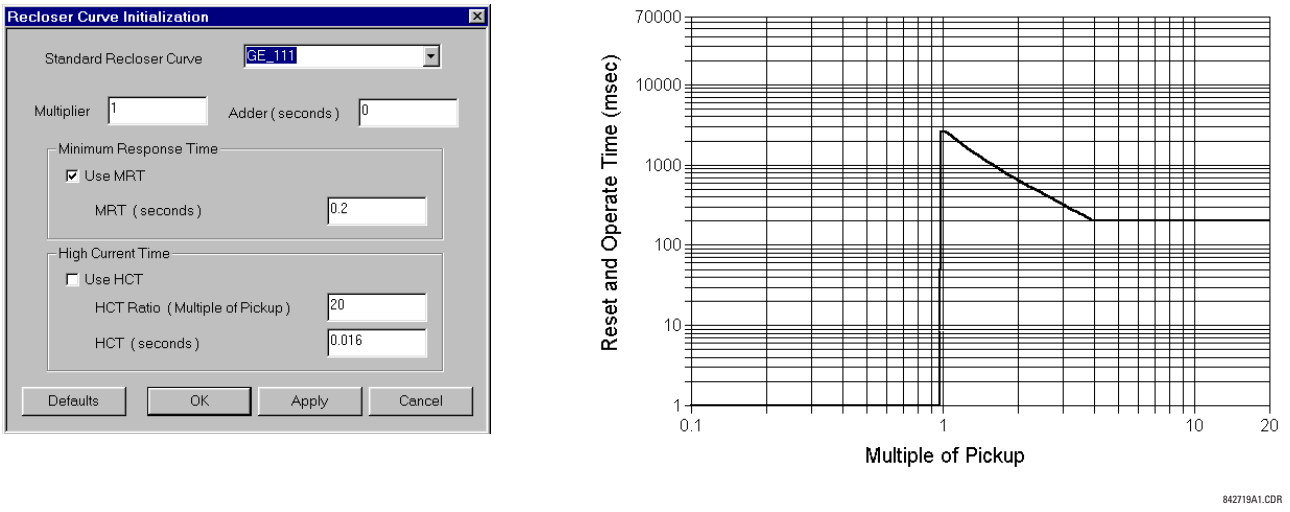

Figure 5–30: COMPOSITE RECLOSER CURVE WITH HCT DISABLED

With the HCT feature enabled, the operating time reduces to 30 ms for pickup multiples exceeding eight times pickup.

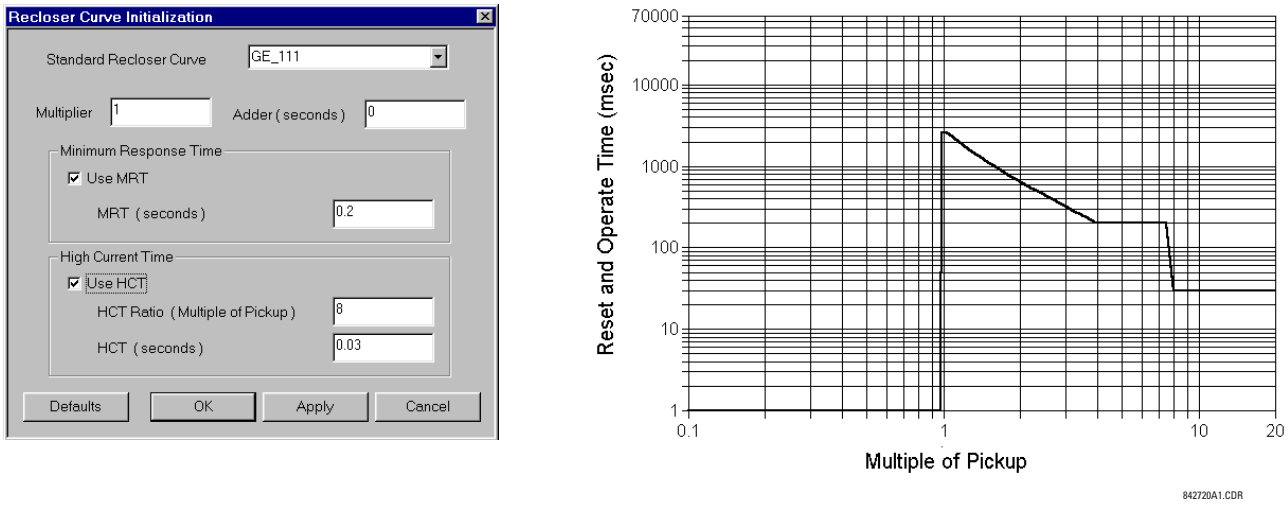

Figure 5–31: COMPOSITE RECLOSER CURVE WITH HCT ENABLED

NOTE

Configuring a composite curve with an increase in operating time at increased pickup multiples is not allowed. If this is attempted, the EnerVista UR Setup software generates an error message and discards the proposed changes.

e) STANDARD RECLOSER CURVES

The standard recloser curves available for the C70 are displayed in the following graphs.

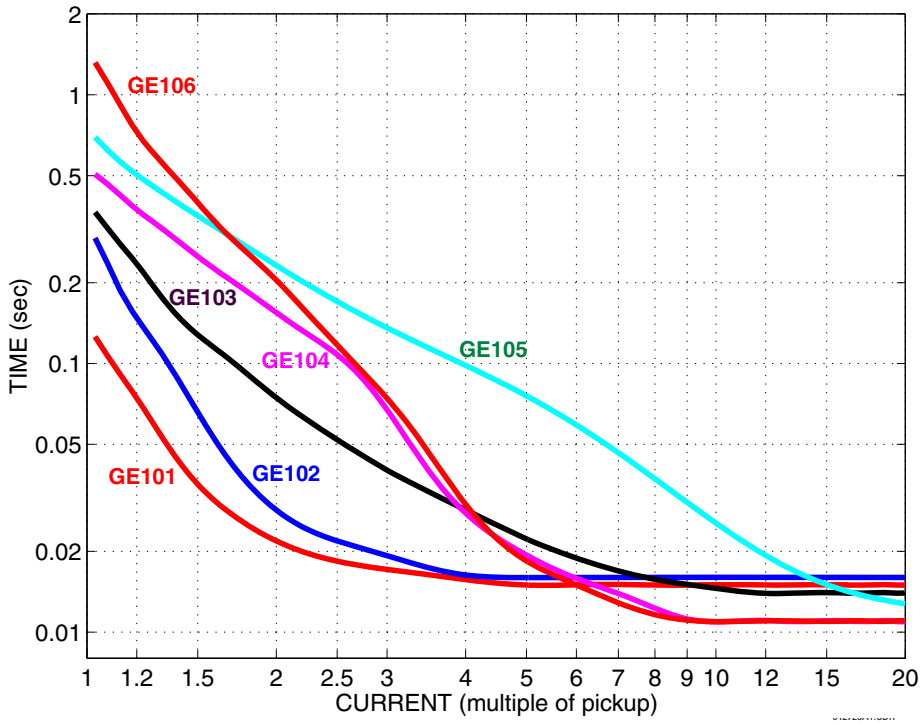

Figure 5–32: RECLOSER CURVES GE101 TO GE106

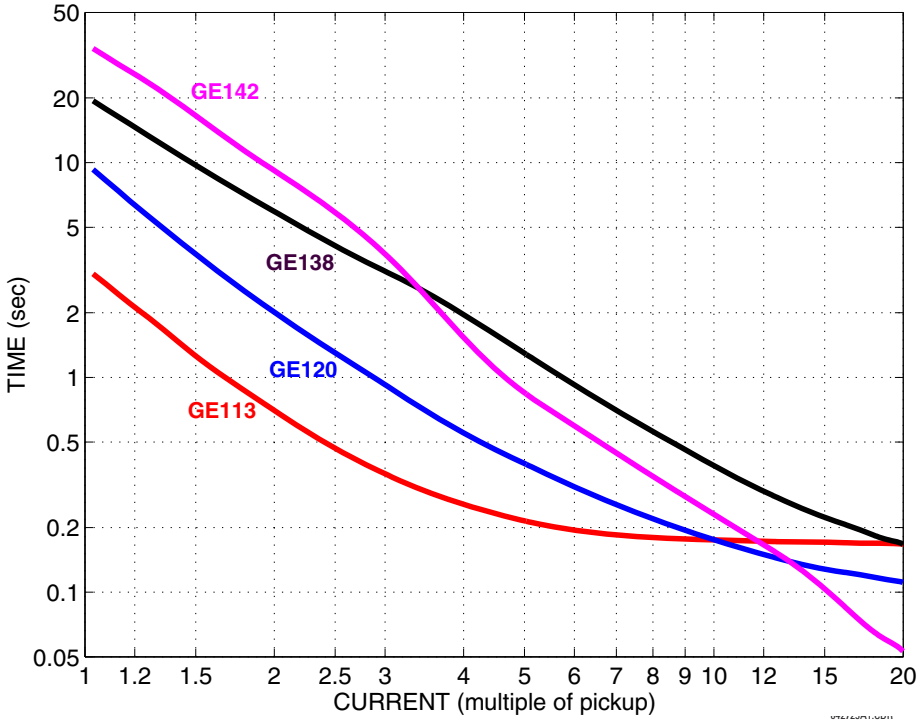

Figure 5–33: RECLOSER CURVES GE113, GE120, GE138 AND GE142

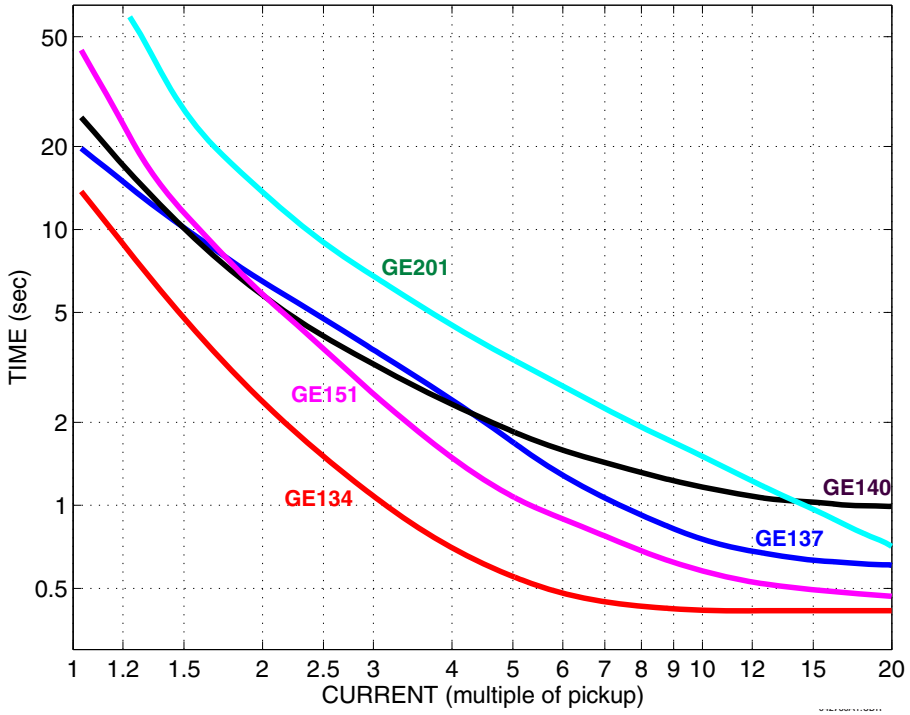

Figure 5–34: RECLOSER CURVES GE134, GE137, GE140, GE151 AND GE201

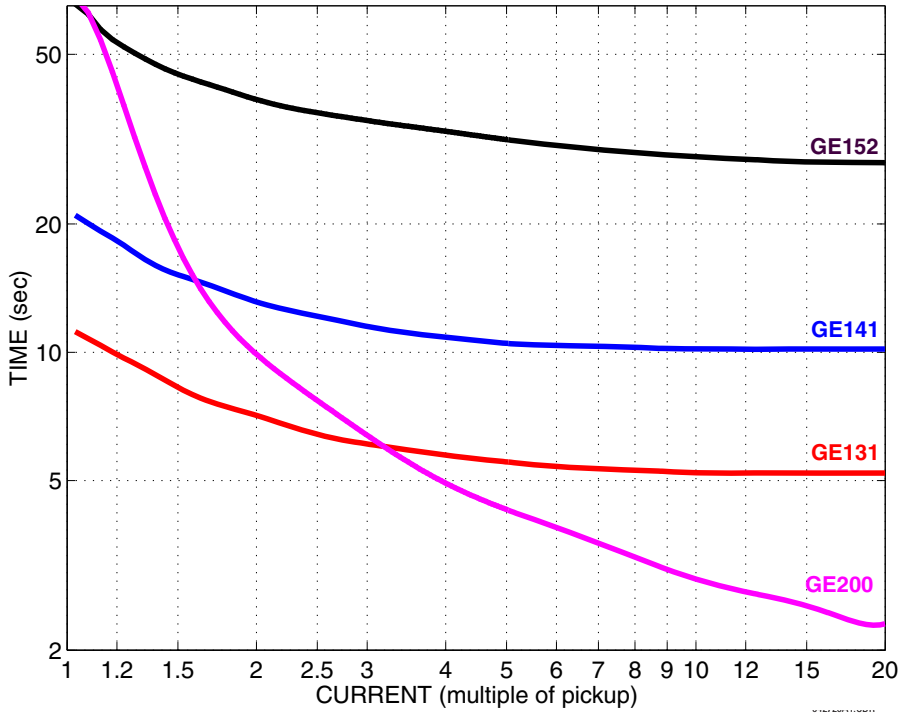

Figure 5–35: RECLOSER CURVES GE131, GE141, GE152, AND GE200

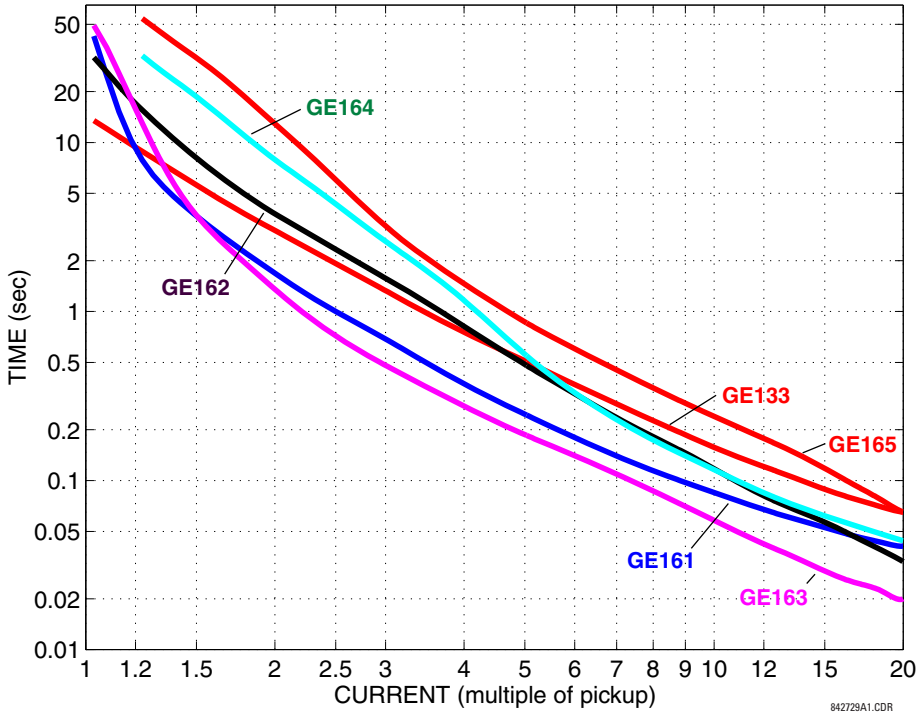

Figure 5–36: RECLOSER CURVES GE133, GE161, GE162, GE163, GE164 AND GE165

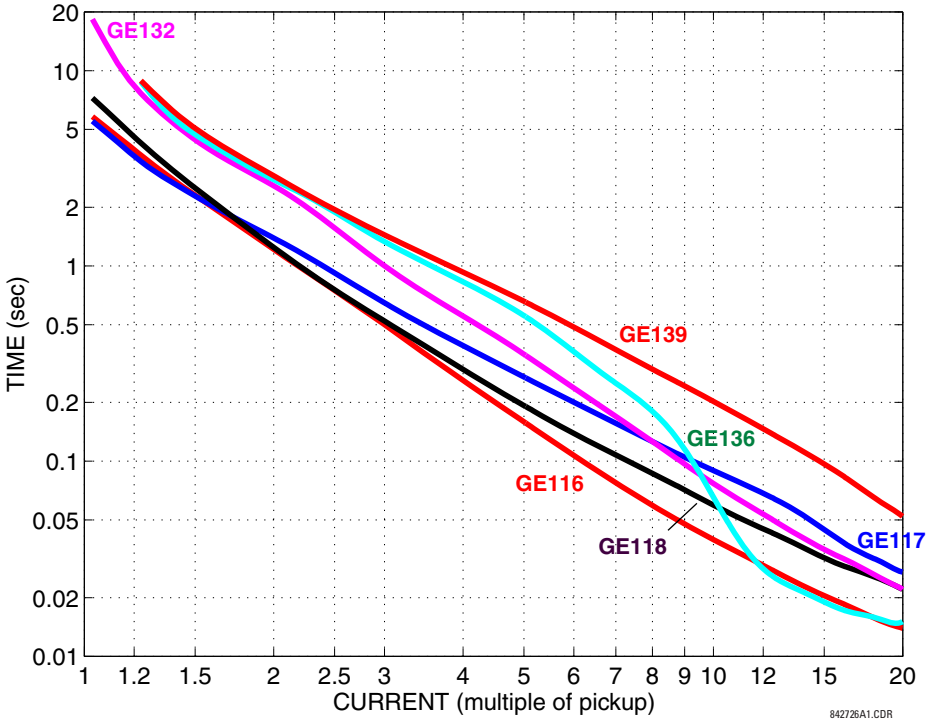

Figure 5–37: RECLOSER CURVES GE116, GE117, GE118, GE132, GE136, AND GE139

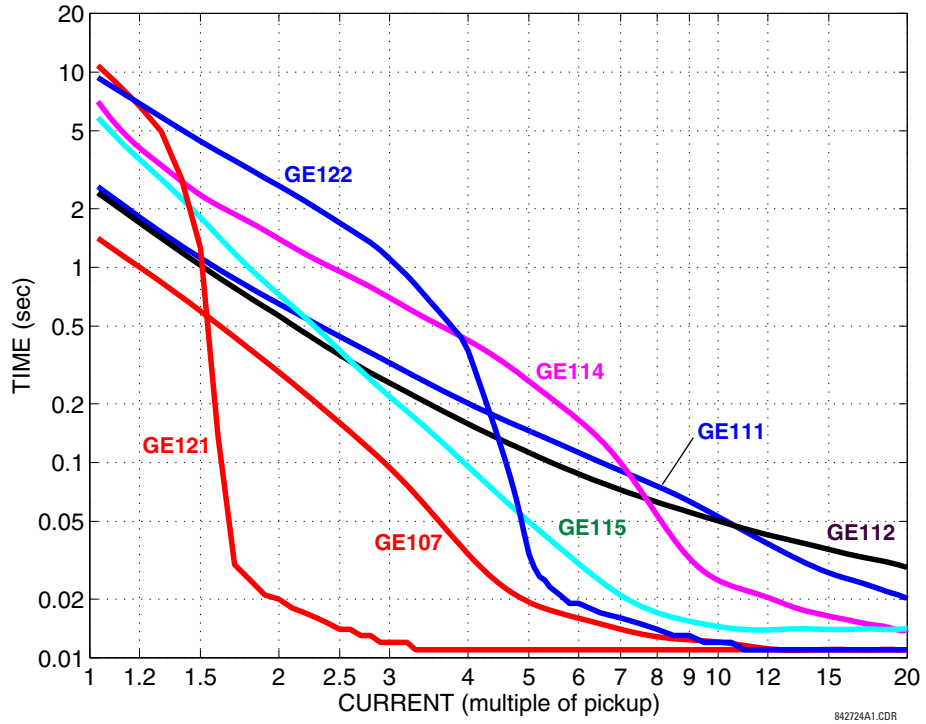

Figure 5–38: RECLOSER CURVES GE107, GE111, GE112, GE114, GE115, GE121, AND GE122

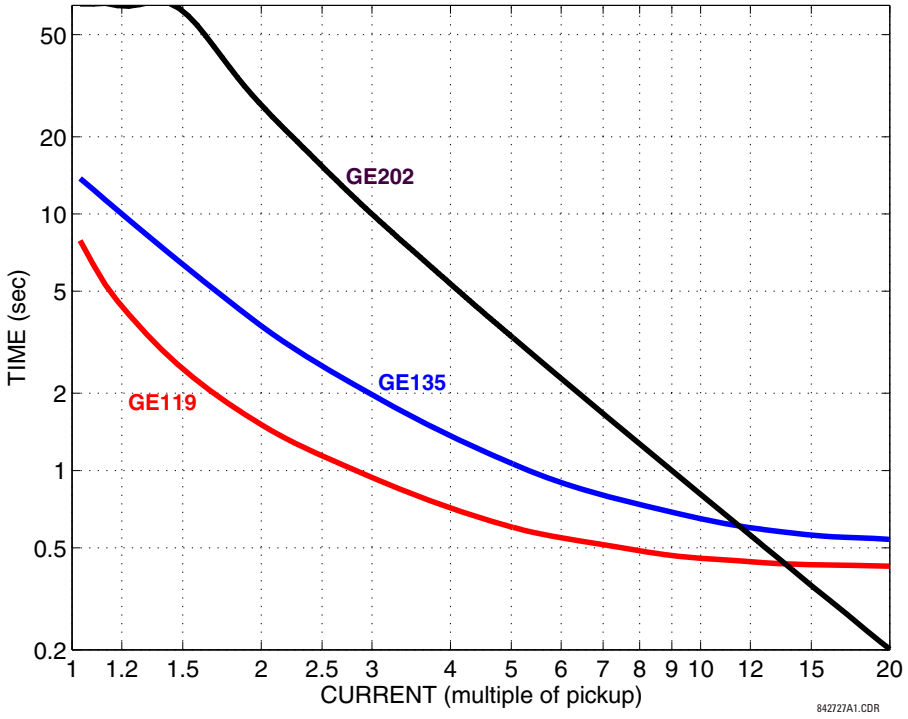

Figure 5–39: RECLOSER CURVES GE119, GE135, AND GE202

5.5.1 INTRODUCTION TO FLEXLOGIC

To provide maximum flexibility to the user, the arrangement of internal digital logic combines fixed and user-programmed parameters. Logic upon which individual features are designed is fixed, and all other logic, from digital input signals through elements or combinations of elements to digital outputs, is variable. The user has complete control of all variable logic through FlexLogic. In general, the system receives analog and digital inputs which it uses to produce analog and digital outputs. The major sub-systems of a generic UR-series relay involved in this process are shown below.

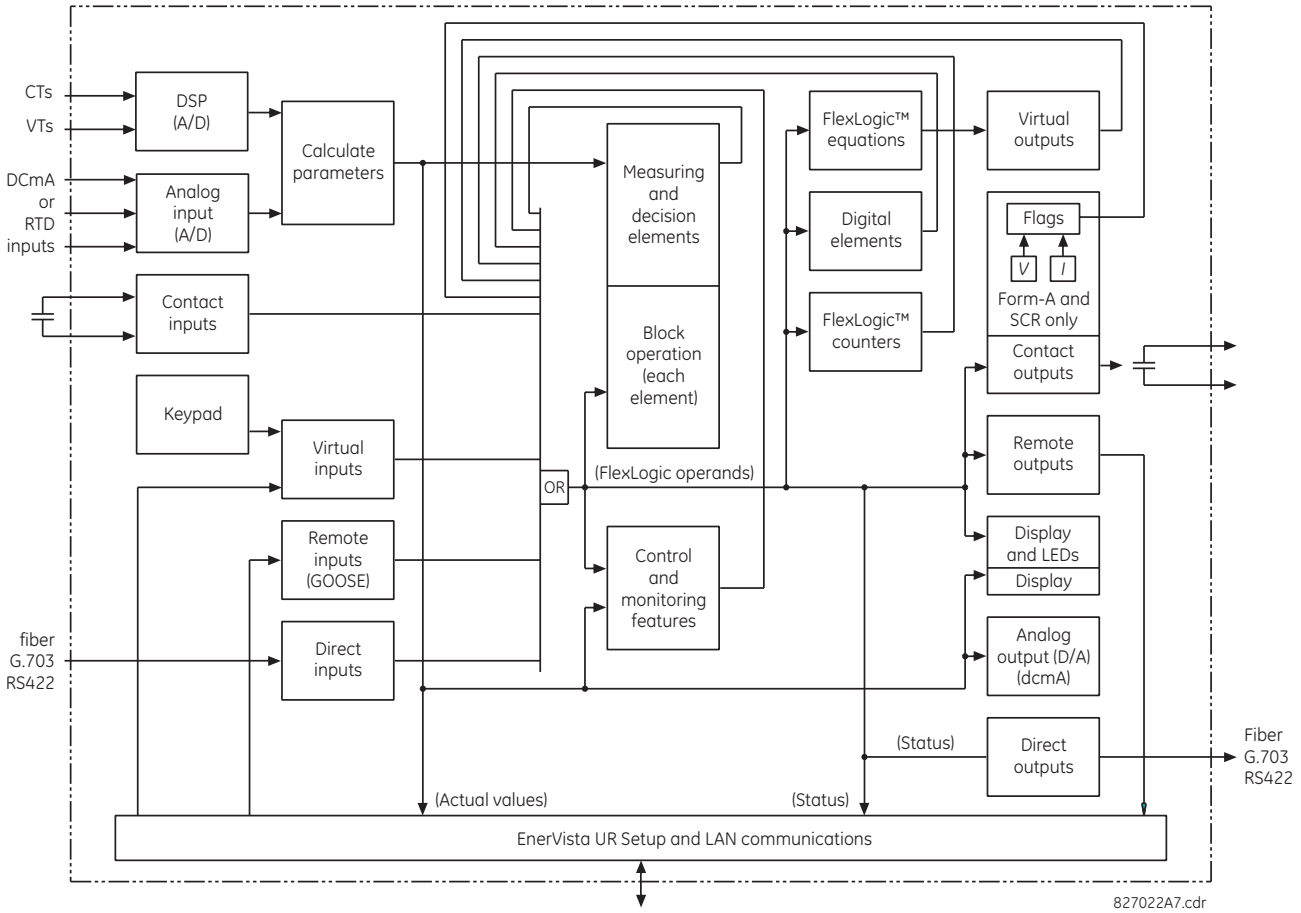

Figure 5–40: UR ARCHITECTURE OVERVIEW

The states of all digital signals used in the C70 are represented by flags (or FlexLogic operands, which are described later in this section). A digital “1” is represented by a 'set' flag. Any external contact change-of-state can be used to block an element from operating, as an input to a control feature in a FlexLogic equation, or to operate a contact output. The state of the contact input can be displayed locally or viewed remotely via the communications facilities provided. If a simple scheme where a contact input is used to block an element is desired, this selection is made when programming the element. This capability also applies to the other features that set flags: elements, virtual inputs, remote inputs, schemes, and human operators.

If more complex logic than presented above is required, it is implemented via FlexLogic. For example, if it is desired to have the closed state of contact input H7a and the operated state of the phase undervoltage element block the operation of the phase time overcurrent element, the two control input states are programmed in a FlexLogic equation. This equation ANDs the two control inputs to produce a virtual output which is then selected when programming the phase time overcurrent to be used as a blocking input. Virtual outputs can only be created by FlexLogic equations.

Traditionally, protective relay logic has been relatively limited. Any unusual applications involving interlocks, blocking, or supervisory functions had to be hard-wired using contact inputs and outputs. FlexLogic minimizes the requirement for auxiliary components and wiring while making more complex schemes possible.

The logic that determines the interaction of inputs, elements, schemes and outputs is field programmable through the use of logic equations that are sequentially processed. The use of virtual inputs and outputs in addition to hardware is available internally and on the communication ports for other relays to use (distributed FlexLogic).

FlexLogic allows users to customize the relay through a series of equations that consist of *operators* and *operands*. The operands are the states of inputs, elements, schemes and outputs. The operators are logic gates, timers and latches (with set and reset inputs). A system of sequential operations allows any combination of specified operands to be assigned as inputs to specified operators to create an output. The final output of an equation is a numbered register called a *virtual output*. Virtual outputs can be used as an input operand in any equation, including the equation that generates the output, as a seal-in or other type of feedback.

A FlexLogic equation consists of parameters that are either operands or operators. Operands have a logic state of 1 or 0. Operators provide a defined function, such as an AND gate or a Timer. Each equation defines the combinations of parameters to be used to set a Virtual Output flag. Evaluation of an equation results in either a 1 (=ON, i.e. flag set) or 0 (=OFF, i.e. flag not set). Each equation is evaluated at least 4 times every power system cycle.

Some types of operands are present in the relay in multiple instances; e.g. contact and remote inputs. These types of operands are grouped together (for presentation purposes only) on the faceplate display. The characteristics of the different types of operands are listed in the table below.

Table 5–14: C70 FLEXLOGIC OPERAND TYPES

OPERAND TYPE	STATE	EXAMPLE FORMAT	CHARACTERISTICS [INPUT IS '1' (= ON) IF...]
Contact Input	On	Cont Ip On	Voltage is presently applied to the input (external contact closed)
	Off	Cont Ip Off	Voltage is presently not applied to the input (external contact open)
Contact Output (type Form-A contact only)	Contact Closed	Cont Op 1 Closed	Contact output is closed
	Current On	Cont Op 1 Ion	Current is flowing through the contact
	Voltage On	Cont Op 1 VOn	Voltage exists across the contact
	Voltage Off	Cont Op 1 VOff	Voltage does not exists across the contact
Direct Input	On	DIRECT INPUT 1 On	The direct input is presently in the ON state
Element (Analog)	Pickup	PHASE TOC1 PKP	The tested parameter is presently above the pickup setting of an element which responds to rising values or below the pickup setting of an element which responds to falling values
	Dropout	PHASE TOC1 DPO	This operand is the logical inverse of the above PKP operand
	Operate	PHASE TOC1 OP	The tested parameter has been above/below the pickup setting of the element for the programmed delay time, or has been at logic 1 and is now at logic 0 but the reset timer has not finished timing
	Block	PHASE TOC1 BLK	The output of the comparator is set to the block function
Element (Digital)	Pickup	Dig Element 1 PKP	The input operand is at logic 1
	Dropout	Dig Element 1 DPO	This operand is the logical inverse of the above PKP operand
	Operate	Dig Element 1 OP	The input operand has been at logic 1 for the programmed pickup delay time, or has been at logic 1 for this period and is now at logic 0 but the reset timer has not finished timing
Element (Digital Counter)	Higher than	Counter 1 HI	The number of pulses counted is above the set number
	Equal to	Counter 1 EQL	The number of pulses counted is equal to the set number
	Lower than	Counter 1 LO	The number of pulses counted is below the set number
Fixed	On	On	Logic 1
	Off	Off	Logic 0
Remote Input	On	REMOTE INPUT 1 On	The remote input is presently in the ON state
Virtual Input	On	Virt Ip 1 On	The virtual input is presently in the ON state
Virtual Output	On	Virt Op 1 On	The virtual output is presently in the set state (i.e. evaluation of the equation which produces this virtual output results in a "1")

The operands available for this relay are listed alphabetically by types in the following table.

Table 5–15: C70 FLEXLOGIC OPERANDS (Sheet 1 of 10)

OPERAND TYPE	OPERAND SYNTAX	OPERAND DESCRIPTION
CONTROL PUSHBUTTONS	CONTROL PUSHBTN 1 ON CONTROL PUSHBTN 2 ON CONTROL PUSHBTN 3 ON CONTROL PUSHBTN 4 ON CONTROL PUSHBTN 5 ON CONTROL PUSHBTN 6 ON CONTROL PUSHBTN 7 ON	Control pushbutton 1 is being pressed Control pushbutton 2 is being pressed Control pushbutton 3 is being pressed Control pushbutton 4 is being pressed Control pushbutton 5 is being pressed Control pushbutton 6 is being pressed Control pushbutton 7 is being pressed
CYBERSENTRY	ROLE ADMIN ACT ROLE SUPERVISOR ACT ROLE ENGINEER ACT ROLE OPERATOR ACT ROLE OBSERVER ACT AUTHENTICATION FAIL UNAUTH FW ATTEMPT UNAUTH SETTING WRITE	Administrator role is active and is set to true when that is the case Supervisor role is active and is set to true when that is the case Engineer role is active and is set to true when that is the case Operator role is active and is set to true when that is the case Observer role is active and is set to true when that is the case Operand set for Failed Authentication self-test and alarm Operand set for firmware lock self-test and alarm Operand set for settings lock self-test and alarm
DIRECT DEVICES	DIRECT DEVICE 1On ↓ DIRECT DEVICE 16On DIRECT DEVICE 1Off ↓ DIRECT DEVICE 16Off	Flag is set, logic=1 ↓ Flag is set, logic=1 Flag is set, logic=1 ↓ Flag is set, logic=1
DIRECT INPUT/ OUTPUT CHANNEL MONITORING	DIR IO CH1 CRC ALARM DIR IO CH2 CRC ALARM DIR IO CH1 UNRET ALM DIR IO CH2 UNRET ALM	The rate of direct input messages received on channel 1 and failing the CRC exceeded the user-specified level The rate of direct input messages received on channel 2 and failing the CRC exceeded the user-specified level The rate of returned direct input/output messages on channel 1 exceeded the user-specified level (ring configurations only) The rate of returned direct input/output messages on channel 2 exceeded the user-specified level (ring configurations only)
ELEMENT: Auxiliary overvoltage	AUX OV1 PKP AUX OV1 DPO AUX OV1 OP	Auxiliary overvoltage element has picked up Auxiliary overvoltage element has dropped out Auxiliary overvoltage element has operated
	AUX OV2 to 3	Same set of operands as shown for AUX OV1
ELEMENT: Automatic voltage regulator	AVR 1 CLOSE PKP AVR 1 CLOSE OP AVR 1 CLOSE DPO AVR 1 OPEN PKP AVR 1 OPEN OP AVR 1 OPEN DPO	Automatic voltage regulator 1 picked up; close command pending Automatic voltage regulator 1 issued a close command Close command of automatic voltage regulator 1 dropped out Automatic voltage regulator 1 picked up; open command pending Automatic voltage regulator 1 issued an open command Open command of automatic voltage regulator 1 dropped out
	AVR 2 to 3	Same set of operands as shown for AVR 1

Table 5–15: C70 FLEXLOGIC OPERANDS (Sheet 2 of 10)

OPERAND TYPE	OPERAND SYNTAX	OPERAND DESCRIPTION
ELEMENT: Bank phase overvoltage	BANK OV 1 STG 1A PKP	Bank overvoltage element 1 picked up in phase A of stage 1
	BANK OV 1 STG 1B PKP	Bank overvoltage element 1 picked up in phase B of stage 1
	BANK OV 1 STG 1C PKP	Bank overvoltage element 1 picked up in phase C of stage 1
	BANK OV 1 STG 2A PKP	Bank overvoltage element 1 picked up in phase A of stage 2
	BANK OV 1 STG 2B PKP	Bank overvoltage element 1 picked up in phase B of stage 2
	BANK OV 1 STG 2C PKP	Bank overvoltage element 1 picked up in phase C of stage 2
	BANK OV 1 STG 3A PKP	Bank overvoltage element 1 picked up in phase A of stage 3
	BANK OV 1 STG 3B PKP	Bank overvoltage element 1 picked up in phase B of stage 3
	BANK OV 1 STG 3C PKP	Bank overvoltage element 1 picked up in phase C of stage 3
	BANK OV 1 STG 4A PKP	Bank overvoltage element 1 picked up in phase A of stage 4
	BANK OV 1 STG 4B PKP	Bank overvoltage element 1 picked up in phase B of stage 4
	BANK OV 1 STG 4C PKP	Bank overvoltage element 1 picked up in phase C of stage 4
	BANK OV 1 PKP A	Bank overvoltage element 1 picked up in phase A
	BANK OV 1 PKP B	Bank overvoltage element 1 picked up in phase B
	BANK OV 1 PKP C	Bank overvoltage element 1 picked up in phase C
	BANK OV 1 PKP	Bank overvoltage element 1 picked up
	BANK OV 1 DPO	Bank overvoltage element 1 dropped out
	BANK OV 1 STG 1A OP	Bank overvoltage element 1 operated in phase A of stage 1
	BANK OV 1 STG 1B OP	Bank overvoltage element 1 operated in phase B of stage 1
	BANK OV 1 STG 1C OP	Bank overvoltage element 1 operated in phase C of stage 1
	BANK OV 1 STG 2A OP	Bank overvoltage element 1 operated in phase A of stage 2
	BANK OV 1 STG 2B OP	Bank overvoltage element 1 operated in phase B of stage 2
	BANK OV 1 STG 2C OP	Bank overvoltage element 1 operated in phase C of stage 2
	BANK OV 1 STG 3A OP	Bank overvoltage element 1 operated in phase A of stage 3
	BANK OV 1 STG 3B OP	Bank overvoltage element 1 operated in phase B of stage 3
	BANK OV 1 STG 3C OP	Bank overvoltage element 1 operated in phase C of stage 3
	BANK OV 1 STG 4A OP	Bank overvoltage element 1 operated in phase A of stage 4
	BANK OV 1 STG 4B OP	Bank overvoltage element 1 operated in phase B of stage 4
	BANK OV 1 STG 4C OP	Bank overvoltage element 1 operated in phase C of stage 4
	BANK OV 1 OP A	Bank overvoltage element 1 operated in phase A
	BANK OV 1 OP B	Bank overvoltage element 1 operated in phase B
	BANK OV 1 OP C	Bank overvoltage element 1 operated in phase C
	BANK OV 1 OP	Bank overvoltage element 1 operated
	BANK OV 2 to 3	Same set of operands as shown for BANK OV 1
ELEMENT Breaker flashover	BKR 1 FLSHOVR PKP A	Breaker 1 flashover element phase A has picked up
	BKR 1 FLSHOVR PKP B	Breaker 1 flashover element phase B has picked up
	BKR 1 FLSHOVR PKP C	Breaker 1 flashover element phase C has picked up
	BKR 1 FLSHOVR PKP	Breaker 1 flashover element has picked up
	BKR 1 FLSHOVR OP A	Breaker 1 flashover element phase A has operated
	BKR 1 FLSHOVR OP B	Breaker 1 flashover element phase B has operated
	BKR 1 FLSHOVR OP C	Breaker 1 flashover element phase C has operated
	BKR 1 FLSHOVR OP	Breaker 1 flashover element has operated
	BKR 1 FLSHOVR DPO A	Breaker 1 flashover element phase A has dropped out
	BKR 1 FLSHOVR DPO B	Breaker 1 flashover element phase B has dropped out
	BKR 1 FLSHOVR DPO C	Breaker 1 flashover element phase C has dropped out
	BKR 1 FLSHOVR DPO	Breaker 1 flashover element has dropped out
ELEMENT Breaker failure	BKR FAIL 1 RETRIPA	Breaker failure 1 re-trip phase A (only for 1-pole schemes)
	BKR FAIL 1 RETRIPB	Breaker failure 1 re-trip phase B (only for 1-pole schemes)
	BKR FAIL 1 RETRIPC	Breaker failure 1 re-trip phase C (only for 1-pole schemes)
	BKR FAIL 1 RETRIP	Breaker failure 1 re-trip 3-phase
	BKR FAIL 1 T1 OP	Breaker failure 1 timer 1 is operated
	BKR FAIL 1 T2 OP	Breaker failure 1 timer 2 is operated
	BKR FAIL 1 T3 OP	Breaker failure 1 timer 3 is operated
	BKR FAIL 1 TRIP OP	Breaker failure 1 trip is operated
ELEMENT Breaker restrike	BRK RESTRIKE 1 OP	Breaker restrike detected in any phase of the breaker control 1 element
	BRK RESTRIKE 1 OP A	Breaker restrike detected in phase A of the breaker control 1 element
	BRK RESTRIKE 1 OP B	Breaker restrike detected in phase B of the breaker control 1 element
	BRK RESTRIKE 1 OP C	Breaker restrike detected in phase C of the breaker control 1 element
	BKR RESTRIKE 2 to 3	Same set of operands as shown for BKR RESTRIKE 1

Table 5–15: C70 FLEXLOGIC OPERANDS (Sheet 3 of 10)

OPERAND TYPE	OPERAND SYNTAX	OPERAND DESCRIPTION
ELEMENT: Breaker control	BREAKER 1 OFF CMD	Breaker 1 open command initiated
	BREAKER 1 ON CMD	Breaker 1 close command initiated
	BREAKER 1 ΦA BAD ST	Breaker 1 phase A bad status is detected (discrepancy between the 52/a and 52/b contacts)
	BREAKER 1 ΦA INTERM	Breaker 1 phase A intermediate status is detected (transition from one position to another)
	BREAKER 1 ΦA CLSD	Breaker 1 phase A is closed
	BREAKER 1 ΦA OPEN	Breaker 1 phase A is open
	BREAKER 1 ΦB BAD ST	Breaker 1 phase B bad status is detected (discrepancy between the 52/a and 52/b contacts)
	BREAKER 1 ΦB INTERM	Breaker 1 phase B intermediate status is detected (transition from one position to another)
	BREAKER 1 ΦB CLSD	Breaker 1 phase B is closed
	BREAKER 1 ΦB OPEN	Breaker 1 phase B is open
	BREAKER 1 ΦC BAD ST	Breaker 1 phase C bad status is detected (discrepancy between the 52/a and 52/b contacts)
	BREAKER 1 ΦC INTERM	Breaker 1 phase C intermediate status is detected (transition from one position to another)
	BREAKER 1 ΦC CLSD	Breaker 1 phase C is closed
	BREAKER 1 ΦC OPEN	Breaker 1 phase C is open
	BREAKER 1 BAD STATUS	Breaker 1 bad status is detected on any pole
	BREAKER 1 CLOSED	Breaker 1 is closed
	BREAKER 1 OPEN	Breaker 1 is open
	BREAKER 1 DISCREP	Breaker 1 has discrepancy
	BREAKER 1 TROUBLE	Breaker 1 trouble alarm
	BREAKER 1 MNL CLS	Breaker 1 manual close
	BREAKER 1 TRIP A	Breaker 1 trip phase A command
	BREAKER 1 TRIP B	Breaker 1 trip phase B command
	BREAKER 1 TRIP C	Breaker 1 trip phase C command
	BREAKER 1 ANY P OPEN	At least one pole of breaker 1 is open
	BREAKER 1 ONE P OPEN	Only one pole of breaker 1 is open
	BREAKER 1 OOS	Breaker 1 is out of service
	BREAKER 2 to 6	Same set of operands as shown for BREAKER 1
ELEMENT: Capacitor control	CAP 1 IN REMOTE	Capacitor control element 1 in remote control mode
	CAP 1 IN LOCAL	Capacitor control element 1 in local control mode
	CAP 1 IN AUTO	Capacitor control element 1 in automatic mode
	CAP 1 IN MAN	Capacitor control element 1 in manual mode
	CAP 1 DISCHARGING	Capacitor 1 is discharging; asserted till discharge delay expires
	CAP 1 BKR TRIP	Capacitor 1 breaker trip command
	CAP 1 BKR CLOSE	Capacitor 1 breaker close command
	CAP 2 to 4	Same set of operands as shown for CAP 1
ELEMENT: Digital counters	Counter 1 HI	Digital counter 1 output is ‘more than’ comparison value
	Counter 1 EQL	Digital counter 1 output is ‘equal to’ comparison value
	Counter 1 LO	Digital counter 1 output is ‘less than’ comparison value
	Counter 2 to 8	Same set of operands as shown for Counter 1

Table 5–15: C70 FLEXLOGIC OPERANDS (Sheet 4 of 10)

OPERAND TYPE	OPERAND SYNTAX	OPERAND DESCRIPTION
ELEMENT: Phase current unbalance	CUR BAL 1 STG1A PKP	Phase current unbalance element 1 picked up in phase A of stage 1
	CUR BAL 1 STG1B PKP	Phase current unbalance element 1 picked up in phase B of stage 1
	CUR BAL 1 STG1C PKP	Phase current unbalance element 1 picked up in phase C of stage 1
	CUR BAL 1 STG2A PKP	Phase current unbalance element 1 picked up in phase A of stage 2
	CUR BAL 1 STG2B PKP	Phase current unbalance element 1 picked up in phase B of stage 2
	CUR BAL 1 STG2C PKP	Phase current unbalance element 1 picked up in phase C of stage 2
	CUR BAL 1 STG3A PKP	Phase current unbalance element 1 picked up in phase A of stage 3
	CUR BAL 1 STG3B PKP	Phase current unbalance element 1 picked up in phase B of stage 3
	CUR BAL 1 STG3C PKP	Phase current unbalance element 1 picked up in phase C of stage 3
	CUR BAL 1 STG4A PKP	Phase current unbalance element 1 picked up in phase A of stage 4
	CUR BAL 1 STG4B PKP	Phase current unbalance element 1 picked up in phase B of stage 4
	CUR BAL 1 STG4C PKP	Phase current unbalance element 1 picked up in phase C of stage 4
	CUR BAL 1 PKP A	Phase current unbalance element 1 picked up in phase A
	CUR BAL 1 PKP B	Phase current unbalance element 1 picked up in phase B
	CUR BAL 1 PKP C	Phase current unbalance element 1 picked up in phase C
	CUR BAL 1 PKP	Phase current unbalance element 1 picked up
	CUR BAL 1 DPO	Phase current unbalance element 1 dropped out
	CUR BAL 1 STG1A OP	Phase current unbalance element 1 operated in phase A of stage 1
	CUR BAL 1 STG1B OP	Phase current unbalance element 1 operated in phase B of stage 1
	CUR BAL 1 STG1C OP	Phase current unbalance element 1 operated in phase C of stage 1
	CUR BAL 1 STG2A OP	Phase current unbalance element 1 operated in phase A of stage 2
	CUR BAL 1 STG2B OP	Phase current unbalance element 1 operated in phase B of stage 2
	CUR BAL 1 STG2C OP	Phase current unbalance element 1 operated in phase C of stage 2
	CUR BAL 1 STG3A OP	Phase current unbalance element 1 operated in phase A of stage 3
	CUR BAL 1 STG3B OP	Phase current unbalance element 1 operated in phase B of stage 3
	CUR BAL 1 STG3C OP	Phase current unbalance element 1 operated in phase C of stage 3
	CUR BAL 1 STG4A OP	Phase current unbalance element 1 operated in phase A of stage 4
	CUR BAL 1 STG4B OP	Phase current unbalance element 1 operated in phase B of stage 4
	CUR BAL 1 STG4C OP	Phase current unbalance element 1 operated in phase C of stage 4
	CUR BAL 1 OP A	Phase current unbalance element 1 operated in phase A
	CUR BAL 1 OP B	Phase current unbalance element 1 operated in phase B
	CUR BAL 1 OP C	Phase current unbalance element 1 operated in phase C
	CUR BAL 1 OP	Phase current unbalance element 1 operated
	CUR BAL 2 to 3	Same set of operands as shown for CUR BAL 1
ELEMENT: Time of day timer day	DAY SUNDAY	Current day is Sunday
	DAY MONDAY	Current day is Monday
	DAY TUESDAY	Current day is Tuesday
	DAY WEDNESDAY	Current day is Wednesday
	DAY THURSDAY	Current day is Thursday
	DAY FRIDAY	Current day is Friday
	DAY SATURDAY	Current day is Saturday
ELEMENT: Digital elements	Dig Element 1 PKP	Digital Element 1 is picked up
	Dig Element 1 OP	Digital Element 1 is operated
	Dig Element 1 DPO	Digital Element 1 is dropped out
	Dig Element 2 to 48	Same set of operands as shown for Dig Element 1
ELEMENT: FlexElements	FxE 1 PKP	FlexElement 1 has picked up
	FxE 1 OP	FlexElement 1 has operated
	FxE 1 DPO	FlexElement 1 has dropped out
	FxE 2 to 16	Same set of operands as shown for FxE 1
ELEMENT: Ground instantaneous overcurrent	GROUND IOC1 PKP	Ground instantaneous overcurrent 1 has picked up
	GROUND IOC1 OP	Ground instantaneous overcurrent 1 has operated
	GROUND IOC1 DPO	Ground instantaneous overcurrent 1 has dropped out
	GROUND IOC2 to 12	Same set of operands as shown for GROUND IOC 1
ELEMENT: Ground time overcurrent	GROUND TOC1 PKP	Ground time overcurrent 1 has picked up
	GROUND TOC1 OP	Ground time overcurrent 1 has operated
	GROUND TOC1 DPO	Ground time overcurrent 1 has dropped out
	GROUND TOC2 to 6	Same set of operands as shown for GROUND TOC1
ELEMENT Non-volatile latches	LATCH 1 ON	Non-volatile latch 1 is ON (Logic = 1)
	LATCH 1 OFF	Non-volatile latch 1 is OFF (Logic = 0)
	LATCH 2 to 16	Same set of operands as shown for LATCH 1

Table 5–15: C70 FLEXLOGIC OPERANDS (Sheet 5 of 10)

OPERAND TYPE	OPERAND SYNTAX	OPERAND DESCRIPTION
ELEMENT: Time of day timer month	MONTH JANUARY	Current month is January
	MONTH FEBRUARY	Current month is February
	MONTH MARCH	Current month is March
	MONTH APRIL	Current month is April
	MONTH MAY	Current month is May
	MONTH JUNE	Current month is June
	MONTH JULY	Current month is July
	MONTH AUGUST	Current month is August
	MONTH SEPTEMBER	Current month is September
	MONTH OCTOBER	Current month is October
	MONTH NOVEMBER	Current month is November
	MONTH DECEMBER	Current month is December
ELEMENT: Negative-sequence directional overcurrent	NEG SEQ DIR OC1 FWD	Negative-sequence directional overcurrent 1 forward has operated
	NEG SEQ DIR OC1 REV	Negative-sequence directional overcurrent 1 reverse has operated
	NEG SEQ DIR OC2 FWD	Negative-sequence directional overcurrent 2 forward has operated
	NEG SEQ DIR OC2 REV	Negative-sequence directional overcurrent 2 reverse has operated
ELEMENT: Negative-sequence instantaneous overcurrent	NEG SEQ IOC1 PKP	Negative-sequence instantaneous overcurrent 1 has picked up
	NEG SEQ IOC1 OP	Negative-sequence instantaneous overcurrent 1 has operated
	NEG SEQ IOC1 DPO	Negative-sequence instantaneous overcurrent 1 has dropped out
	NEG SEQ IOC2	Same set of operands as shown for NEG SEQ IOC1
ELEMENT: Negative-sequence overvoltage	NEG SEQ OV1 PKP	Negative-sequence overvoltage element has picked up
	NEG SEQ OV1 DPO	Negative-sequence overvoltage element has dropped out
	NEG SEQ OV1 OP	Negative-sequence overvoltage element has operated
	NEG SEQ OV2 to 3	Same set of operands as shown for NEG SEQ OV1
ELEMENT: Negative-sequence time overcurrent	NEG SEQ TOC1 PKP	Negative-sequence time overcurrent 1 has picked up
	NEG SEQ TOC1 OP	Negative-sequence time overcurrent 1 has operated
	NEG SEQ TOC1 DPO	Negative-sequence time overcurrent 1 has dropped out
	NEG SEQ TOC2	Same set of operands as shown for NEG SEQ TOC1
ELEMENT: Neutral instantaneous overcurrent	NEUTRAL IOC1 PKP	Neutral instantaneous overcurrent 1 has picked up
	NEUTRAL IOC1 OP	Neutral instantaneous overcurrent 1 has operated
	NEUTRAL IOC1 DPO	Neutral instantaneous overcurrent 1 has dropped out
	NEUTRAL IOC2 to 12	Same set of operands as shown for NEUTRAL IOC1
ELEMENT: Neutral overvoltage	NEUTRAL OV1 PKP	Neutral overvoltage element 1 has picked up
	NEUTRAL OV1 DPO	Neutral overvoltage element 1 has dropped out
	NEUTRAL OV1 OP	Neutral overvoltage element 1 has operated
	NEUTRAL OV2 to 3	Same set of operands as shown for NEUTRAL OV1
ELEMENT: Neutral time overcurrent	NEUTRAL TOC1 PKP	Neutral time overcurrent 1 has picked up
	NEUTRAL TOC1 OP	Neutral time overcurrent 1 has operated
	NEUTRAL TOC1 DPO	Neutral time overcurrent 1 has dropped out
	NEUTRAL TOC2 to 6	Same set of operands as shown for NEUTRAL TOC1
ELEMENT: Neutral current unbalance	NTRL CUR 1 STG1 PKP	Neutral current unbalance element 1 picked up in stage 1
	NTRL CUR 1 STG2 PKP	Neutral current unbalance element 1 picked up in stage 2
	NTRL CUR 1 STG3 PKP	Neutral current unbalance element 1 picked up in stage 3
	NTRL CUR 1 STG4 PKP	Neutral current unbalance element 1 picked up in stage 4
	NTRL CUR 1 PKP	Neutral current unbalance element 1 picked up
	NTRL CUR 1 DPO	Neutral current unbalance element 1 dropped out
	NTRL CUR 1 STG1 OP	Neutral current unbalance element 1 operated in stage 1
	NTRL CUR 1 STG2 OP	Neutral current unbalance element 1 operated in stage 2
	NTRL CUR 1 STG3 OP	Neutral current unbalance element 1 operated in stage 3
	NTRL CUR 1 STG4 OP	Neutral current unbalance element 1 operated in stage 4
	NTRL CUR 1 OP	Neutral current unbalance element 1 operated
	NTRL CUR 2 to 3	Same set of operands as shown for NTRL CUR 1
ELEMENT: Neutral directional overcurrent	NTRL DIR OC1 FWD	Neutral directional overcurrent 1 forward has operated
	NTRL DIR OC1 REV	Neutral directional overcurrent 1 reverse has operated

Table 5–15: C70 FLEXLOGIC OPERANDS (Sheet 6 of 10)

OPERAND TYPE	OPERAND SYNTAX	OPERAND DESCRIPTION
ELEMENT: Neutral voltage unbalance	NTRL VOLT 1 STG1 PKP	Neutral voltage unbalance element 1 picked up in stage 1
	NTRL VOLT 1 STG2 PKP	Neutral voltage unbalance element 1 picked up in stage 2
	NTRL VOLT 1 STG3 PKP	Neutral voltage unbalance element 1 picked up in stage 3
	NTRL VOLT 1 STG4 PKP	Neutral voltage unbalance element 1 picked up in stage 4
	NTRL VOLT 1 PKP	Neutral voltage unbalance element 1 picked up
	NTRL VOLT 1 DPO	Neutral voltage unbalance element 1 dropped out
	NTRL VOLT 1 STG1 OP	Neutral voltage unbalance element 1 operated in stage 1
	NTRL VOLT 1 STG2 OP	Neutral voltage unbalance element 1 operated in stage 2
	NTRL VOLT 1 STG3 OP	Neutral voltage unbalance element 1 operated in stage 3
	NTRL VOLT 1 STG4 OP	Neutral voltage unbalance element 1 operated in stage 4
	NTRL VOLT 1 OP	Neutral voltage unbalance element 1 operated
	NTRL VOLT 2 to 3	Same set of operands as shown for NTRL VOLT 1
ELEMENT: Phase directional overcurrent	PH DIR1 BLK A	Phase A directional 1 block
	PH DIR1 BLK B	Phase B directional 1 block
	PH DIR1 BLK C	Phase C directional 1 block
	PH DIR1 BLK	Phase directional 1 block
	PH DIR2	Same set of operands as shown for PH DIR1
ELEMENT: Phase instantaneous overcurrent	PHASE IOC1 PKP	At least one phase of phase instantaneous overcurrent 1 has picked up
	PHASE IOC1 OP	At least one phase of phase instantaneous overcurrent 1 has operated
	PHASE IOC1 DPO	All phases of phase instantaneous overcurrent 1 have dropped out
	PHASE IOC1 PKP A	Phase A of phase instantaneous overcurrent 1 has picked up
	PHASE IOC1 PKP B	Phase B of phase instantaneous overcurrent 1 has picked up
	PHASE IOC1 PKP C	Phase C of phase instantaneous overcurrent 1 has picked up
	PHASE IOC1 OP A	Phase A of phase instantaneous overcurrent 1 has operated
	PHASE IOC1 OP B	Phase B of phase instantaneous overcurrent 1 has operated
	PHASE IOC1 OP C	Phase C of phase instantaneous overcurrent 1 has operated
	PHASE IOC1 DPO A	Phase A of phase instantaneous overcurrent 1 has dropped out
	PHASE IOC1 DPO B	Phase B of phase instantaneous overcurrent 1 has dropped out
	PHASE IOC1 DPO C	Phase C of phase instantaneous overcurrent 1 has dropped out
	PHASE IOC2 to 12	Same set of operands as shown for PHASE IOC1
ELEMENT: Phase overvoltage	PHASE OV1 PKP	At least one phase of overvoltage 1 has picked up
	PHASE OV1 OP	At least one phase of overvoltage 1 has operated
	PHASE OV1 DPO	All phases of overvoltage 1 have dropped out
	PHASE OV1 PKP A	Phase A of overvoltage 1 has picked up
	PHASE OV1 PKP B	Phase B of overvoltage 1 has picked up
	PHASE OV1 PKP C	Phase C of overvoltage 1 has picked up
	PHASE OV1 OP A	Phase A of overvoltage 1 has operated
	PHASE OV1 OP B	Phase B of overvoltage 1 has operated
	PHASE OV1 OP C	Phase C of overvoltage 1 has operated
	PHASE OV1 DPO A	Phase A of overvoltage 1 has dropped out
	PHASE OV1 DPO B	Phase B of overvoltage 1 has dropped out
	PHASE OV1 DPO C	Phase C of overvoltage 1 has dropped out
	PHASE OV2 to 3	Same set of operands as shown for PHASE OV1
ELEMENT: Phase time overcurrent	PHASE TOC1 PKP	At least one phase of phase time overcurrent 1 has picked up
	PHASE TOC1 OP	At least one phase of phase time overcurrent 1 has operated
	PHASE TOC1 DPO	All phases of phase time overcurrent 1 have dropped out
	PHASE TOC1 PKP A	Phase A of phase time overcurrent 1 has picked up
	PHASE TOC1 PKP B	Phase B of phase time overcurrent 1 has picked up
	PHASE TOC1 PKP C	Phase C of phase time overcurrent 1 has picked up
	PHASE TOC1 OP A	Phase A of phase time overcurrent 1 has operated
	PHASE TOC1 OP B	Phase B of phase time overcurrent 1 has operated
	PHASE TOC1 OP C	Phase C of phase time overcurrent 1 has operated
	PHASE TOC1 DPO A	Phase A of phase time overcurrent 1 has dropped out
	PHASE TOC1 DPO B	Phase B of phase time overcurrent 1 has dropped out
	PHASE TOC1 DPO C	Phase C of phase time overcurrent 1 has dropped out
	PHASE TOC2 to 6	Same set of operands as shown for PHASE TOC1
	PHASE TOC1 I2t RST	All phases I^2t accumulated energy dropped below level per reset curve
	PHASE TOC2 I2t RST	All phases I^2t accumulated energy dropped below level per reset curve

Table 5–15: C70 FLEXLOGIC OPERANDS (Sheet 7 of 10)

OPERAND TYPE	OPERAND SYNTAX	OPERAND DESCRIPTION
ELEMENT: Phase undervoltage	PHASE UV1 PKP	At least one phase of phase undervoltage 1 has picked up
	PHASE UV1 OP	At least one phase of phase undervoltage 1 has operated
	PHASE UV1 DPO	All phases of phase undervoltage 1 have dropped out
	PHASE UV1 PKP A	Phase A of phase undervoltage 1 has picked up
	PHASE UV1 PKP B	Phase B of phase undervoltage 1 has picked up
	PHASE UV1 PKP C	Phase C of phase undervoltage 1 has picked up
	PHASE UV1 OP A	Phase A of phase undervoltage 1 has operated
	PHASE UV1 OP B	Phase B of phase undervoltage 1 has operated
	PHASE UV1 OP C	Phase C of phase undervoltage 1 has operated
	PHASE UV1 DPO A	Phase A of phase undervoltage 1 has dropped out
	PHASE UV1 DPO B	Phase B of phase undervoltage 1 has dropped out
	PHASE UV1 DPO C	Phase C of phase undervoltage 1 has dropped out
	PHASE UV2 to 3	Same set of operands as shown for PHASE UV1
ELEMENT: Selector switch	SELECTOR 1 POS Y	Selector switch 1 is in Position Y (mutually exclusive operands)
	SELECTOR 1 BIT 0	First bit of the 3-bit word encoding position of selector 1
	SELECTOR 1 BIT 1	Second bit of the 3-bit word encoding position of selector 1
	SELECTOR 1 BIT 2	Third bit of the 3-bit word encoding position of selector 1
	SELECTOR 1 STP ALARM	Position of selector 1 has been pre-selected with the stepping up control input but not acknowledged
	SELECTOR 1 BIT ALARM	Position of selector 1 has been pre-selected with the 3-bit control input but not acknowledged
	SELECTOR 1 ALARM	Position of selector 1 has been pre-selected but not acknowledged
	SELECTOR 1 PWR ALARM	Position of selector switch 1 is undetermined or restored from memory when the relay powers up and synchronizes to the three-bit input
	SELECTOR 2	Same set of operands as shown above for SELECTOR 1
ELEMENT: Setting group	SETTING GROUP ACT 1	Setting group 1 is active
	SETTING GROUP ACT 2	Setting group 2 is active
	SETTING GROUP ACT 3	Setting group 3 is active
	SETTING GROUP ACT 4	Setting group 4 is active
	SETTING GROUP ACT 5	Setting group 5 is active
	SETTING GROUP ACT 6	Setting group 6 is active
ELEMENT: Disturbance detector	SRC1 50DD OP	Source 1 disturbance detector has operated
	SRC2 50DD OP	Source 2 disturbance detector has operated
	SRC3 50DD OP	Source 3 disturbance detector has operated
	SRC4 50DD OP	Source 4 disturbance detector has operated
	SRC5 50DD OP	Source 5 disturbance detector has operated
	SRC6 50DD OP	Source 6 disturbance detector has operated
ELEMENT: VTFF (Voltage transformer fuse failure)	SRC1 VT FF OP	Source 1 VT fuse failure detector has operated
	SRC1 VT FF DPO	Source 1 VT fuse failure detector has dropped out
	SRC1 VT FF VOL LOSS	Source 1 has lost voltage signals (V2 below 10% and V1 below 5% of nominal)
	SRC1 VT NEU WIRE OPEN	Source 1 VT neutral wire open detected.When the VT is connected in Delta, this function should not be enabled because there is no neutral wire for Delta connected VT.
	SRC2 VT FUSE FAIL to SRC6	Same set of operands as shown for SRC1 VT FUSE FAIL

Table 5–15: C70 FLEXLOGIC OPERANDS (Sheet 8 of 10)

OPERAND TYPE	OPERAND SYNTAX	OPERAND DESCRIPTION
ELEMENT: Disconnect switch	SWITCH 1 OFF CMD	Disconnect switch 1 open command initiated
	SWITCH 1 ON CMD	Disconnect switch 1 close command initiated
	SWITCH 1 CLOSED	Disconnect switch 1 is closed
	SWITCH 1 OPEN	Disconnect switch 1 is open
	SWITCH 1 DISCREP	Disconnect switch 1 has discrepancy
	SWITCH 1 TROUBLE	Disconnect switch 1 trouble alarm
	SWITCH 1 ΦA CLSD	Disconnect switch 1 phase A is closed
	SWITCH 1 ΦA OPEN	Disconnect switch 1 phase A is open
	SWITCH 1 ΦA BAD ST	Disconnect switch 1 phase A bad status is detected (discrepancy between the 89/a and 89/b contacts)
	SWITCH 1 ΦA INTERM	Disconnect switch 1 phase A intermediate status is detected (transition from one position to another)
	SWITCH 1 ΦB CLSD	Disconnect switch 1 phase B is closed
	SWITCH 1 ΦB OPEN	Disconnect switch 1 phase B is open
	SWITCH 1 ΦB BAD ST	Disconnect switch 1 phase B bad status is detected (discrepancy between the 89/a and 89/b contacts)
	SWITCH 1 ΦB INTERM	Disconnect switch 1 phase B intermediate status is detected (transition from one position to another)
	SWITCH 1 ΦC CLSD	Disconnect switch 1 phase C is closed
	SWITCH 1 ΦC OPEN	Disconnect switch 1 phase C is open
	SWITCH 1 ΦC BAD ST	Disconnect switch 1 phase C bad status is detected (discrepancy between the 89/a and 89/b contacts)
	SWITCH 1 ΦC INTERM	Disconnect switch 1 phase C intermediate status is detected (transition from one position to another)
	SWITCH 1 BAD STATUS	Disconnect switch 1 bad status is detected on any pole
	SWITCH 2 to 24	Same set of operands as shown for SWITCH 1
ELEMENT: Thermal overload protection	THERMAL PROT 1 PKP	Thermal overload protection 1 picked up
	THERMAL PROT 1 OP	Thermal overload protection 1 operated
	THERMAL PROT 2	Same set of operands as shown for THERMAL PROT 1
ELEMENT: Time of day timer	TIME OF DAY 1 OFF	Time of day timer 1 is off
	TIME OF DAY 1 ON	Time of day timer 1 is on
	TIME OF DAY 1 START	One-second pulse at set time of day timer 1 start time
	TIME OF DAY 1 STOP	One-second pulse at set time of day timer 1 stop time
	TIME OF DAY 2 to 5	Same set of operands as shown for TIME OF DAY 1
ELEMENT Trip bus	TRIP BUS 1 PKP	Asserted when the trip bus 1 element picks up
	TRIP BUS 1 OP	Asserted when the trip bus 1 element operates
	TRIP BUS 2 to 6	Same set of operands as shown for TRIP BUS 1
ELEMENT: Voltage differential	VOLT DIF 1 STG1A PKP	Voltage differential element 1 picked up in phase A of stage 1
	VOLT DIF 1 STG1B PKP	Voltage differential element 1 picked up in phase B of stage 1
	VOLT DIF 1 STG1C PKP	Voltage differential element 1 picked up in phase C of stage 1
	VOLT DIF 1 STG2A PKP	Voltage differential element 1 picked up in phase A of stage 2
	VOLT DIF 1 STG2B PKP	Voltage differential element 1 picked up in phase B of stage 2
	VOLT DIF 1 STG2C PKP	Voltage differential element 1 picked up in phase C of stage 2
	VOLT DIF 1 STG3A PKP	Voltage differential element 1 picked up in phase A of stage 3
	VOLT DIF 1 STG3B PKP	Voltage differential element 1 picked up in phase B of stage 3
	VOLT DIF 1 STG3C PKP	Voltage differential element 1 picked up in phase C of stage 3
	VOLT DIF 1 STG4A PKP	Voltage differential element 1 picked up in phase A of stage 4
	VOLT DIF 1 STG4B PKP	Voltage differential element 1 picked up in phase B of stage 4
	VOLT DIF 1 STG4C PKP	Voltage differential element 1 picked up in phase C of stage 4
	VOLT DIF 1 PKP A	Voltage differential element 1 picked up in phase A
	VOLT DIF 1 PKP B	Voltage differential element 1 picked up in phase B
	VOLT DIF 1 PKP C	Voltage differential element 1 picked up in phase C
	VOLT DIF 1 PKP	Voltage differential element 1 picked up
	VOLT DIF 1 DPO	Voltage differential element 1 dropped out
	VOLT DIF 1 STG1A OP	Voltage differential element 1 operated in phase A of stage 1
	VOLT DIF 1 STG1B OP	Voltage differential element 1 operated in phase B of stage 1
	VOLT DIF 1 STG1C OP	Voltage differential element 1 operated in phase C of stage 1
	VOLT DIF 1 STG2A OP	Voltage differential element 1 operated in phase A of stage 2
	VOLT DIF 1 STG2B OP	Voltage differential element 1 operated in phase B of stage 2
	VOLT DIF 1 STG2C OP	Voltage differential element 1 operated in phase C of stage 2
	VOLT DIF 1 STG3A OP	Voltage differential element 1 operated in phase A of stage 3
	VOLT DIF 1 STG3B OP	Voltage differential element 1 operated in phase B of stage 3
	VOLT DIF 1 STG3C OP	Voltage differential element 1 operated in phase C of stage 3
	VOLT DIF 1 STG4A OP	Voltage differential element 1 operated in phase A of stage 4
	VOLT DIF 1 STG4B OP	Voltage differential element 1 operated in phase B of stage 4
	VOLT DIF 1 STG4C OP	Voltage differential element 1 operated in phase C of stage 4
	VOLT DIF 1 OP A	Voltage differential element 1 operated in phase A
	VOLT DIF 1 OP B	Voltage differential element 1 operated in phase B
	VOLT DIF 1 OP C	Voltage differential element 1 operated in phase C
	VOLT DIF 1 OP	Voltage differential element 1 operated
	VOLT DIF 2 to 3	Same set of operands as shown for VOLT DIF 1

Table 5–15: C70 FLEXLOGIC OPERANDS (Sheet 9 of 10)

OPERAND TYPE	OPERAND SYNTAX	OPERAND DESCRIPTION
FIXED OPERANDS	Off	Logic = 0. Does nothing and may be used as a delimiter in an equation list; used as 'Disable' by other features.
	On	Logic = 1. Can be used as a test setting.
INPUTS/OUTPUTS: Contact inputs	Cont Ip 1 On Cont Ip 2 On ↓ Cont Ip 1 Off Cont Ip 2 Off ↓ Cont Ip 96 On Cont Ip 96 Off	(will not appear unless ordered) (will not appear unless ordered) ↓ (will not appear unless ordered) (will not appear unless ordered) ↓ (will not appear unless ordered) (will not appear unless ordered)
INPUTS/OUTPUTS: Contact outputs	Cont Op 1 Closed Cont Op 1 IOn Cont Op 1 VOn Cont Op 1 VOff	Contact output is closed Current is flowing through the contact Voltage exists across the contact (present for contact outputs equipped with monitoring) Voltage exists across the contact (present for contact outputs equipped with monitoring)
	Cont Op 2 to 64	Same set of operands as shown for Cont Op 1
INPUTS/OUTPUTS Direct inputs	DIRECT INPUT 1 On ↓ DIRECT INPUT 32 On	Flag is set, logic=1 ↓ Flag is set, logic=1
INPUTS/OUTPUTS: Remote double-point status inputs	RemDPS Ip 1 BAD RemDPS Ip 1 INTERM RemDPS Ip 1 OFF RemDPS Ip 1 ON	Asserted while the remote double-point status input is in the bad state Asserted while the remote double-point status input is in the intermediate state Asserted while the remote double-point status input is off Asserted while the remote double-point status input is on
	REMDPS Ip 2 to 5	Same set of operands as per REMDPS 1
INPUTS/OUTPUTS: Remote inputs	REMOTE INPUT 1 On REMOTE INPUT 2 On REMOTE INPUT 3 On ↓ REMOTE INPUT 32 On	Flag is set, logic=1 Flag is set, logic=1 Flag is set, logic=1 ↓ Flag is set, logic=1
INPUTS/OUTPUTS: Virtual inputs	Virt Ip 1 On Virt Ip 2 On Virt Ip 3 On ↓ Virt Ip 64 On	Flag is set, logic=1 Flag is set, logic=1 Flag is set, logic=1 ↓ Flag is set, logic=1
INPUTS/OUTPUTS: Virtual outputs	Virt Op 1 On Virt Op 2 On Virt Op 3 On ↓ Virt Op 96 On	Flag is set, logic=1 Flag is set, logic=1 Flag is set, logic=1 ↓ Flag is set, logic=1
LED INDICATORS: Fixed front panel LEDs	LED IN SERVICE LED TROUBLE LED TEST MODE LED TRIP LED ALARM LED PICKUP LED VOLTAGE LED CURRENT LED FREQUENCY LED OTHER LED PHASE A LED PHASE B LED PHASE C LED NEUTRAL/GROUND	Asserted when the front panel IN SERVICE LED is on Asserted when the front panel TROUBLE LED is on Asserted when the front panel TEST MODE LED is on Asserted when the front panel TRIP LED is on Asserted when the front panel ALARM LED is on Asserted when the front panel PICKUP LED is on Asserted when the front panel VOLTAGE LED is on Asserted when the front panel CURRENT LED is on Asserted when the front panel FREQUENCY LED is on Asserted when the front panel OTHER LED is on Asserted when the front panel PHASE A LED is on Asserted when the front panel PHASE B LED is on Asserted when the front panel PHASE C LED is on Asserted when the front panel NEUTRAL/GROUND LED is on
LED INDICATORS: LED test	LED TEST IN PROGRESS	An LED test has been initiated and has not finished
LED INDICATORS: User-programmable LEDs	LED USER 1	Asserted when user-programmable LED 1 is on
	LED USER 2 to 48	The operand above is available for user-programmable LEDs 2 through 48

Table 5–15: C70 FLEXLOGIC OPERANDS (Sheet 10 of 10)

OPERAND TYPE	OPERAND SYNTAX	OPERAND DESCRIPTION
PASSWORD SECURITY	ACCESS LOC SETG OFF ACCESS LOC SETG ON ACCESS LOC CMND OFF ACCESS LOC CMND ON ACCESS REM SETG OFF ACCESS REM SETG ON ACCESS REM CMND OFF ACCESS REM CMND ON UNAUTHORIZED ACCESS	Asserted when local setting access is disabled Asserted when local setting access is enabled Asserted when local command access is disabled Asserted when local command access is enabled Asserted when remote setting access is disabled Asserted when remote setting access is enabled Asserted when remote command access is disabled Asserted when remote command access is enabled Asserted when a password entry fails while accessing a password protected level of the C70
REMOTE DEVICES	REMOTE DEVICE 1 On REMOTE DEVICE 2 On REMOTE DEVICE 3 On ↓ REMOTE DEVICE 16 On	Flag is set, logic=1 Flag is set, logic=1 Flag is set, logic=1 ↓ Flag is set, logic=1
	REMOTE DEVICE 1 Off REMOTE DEVICE 2 Off REMOTE DEVICE 3 Off ↓ REMOTE DEVICE 16 Off	Flag is set, logic=1 Flag is set, logic=1 Flag is set, logic=1 ↓ Flag is set, logic=1
RESETTING	RESET OP RESET OP (COMMS) RESET OP (OPERAND) RESET OP (PUSHBUTTON)	Reset command is operated (set by all three operands below) Communications source of the reset command Operand (assigned in the **INPUTS/OUTPUTS ⇨⇩ RESETTING** menu) source of the reset command Reset key (pushbutton) source of the reset command
SELF-DIAGNOSTICS (See *Relay Self-tests* descriptions in *Chapter 7: Commands and Targets)*	ANY MAJOR ERROR ANY MINOR ERROR ANY SELF-TESTS BATTERY FAIL CLOCK UNSYNCHRONIZED DIRECT DEVICE OFF DIRECT RING BREAK EQUIPMENT MISMATCH FLEXLOGIC ERR TOKEN IRIG-B FAILURE LATCHING OUT ERROR MAINTENANCE ALERT FIRST ETHERNET FAIL PROCESS BUS FAILURE PTP FAILURE REMOTE DEVICE OFF RRTD COMM FAIL SECOND ETHERNET FAIL THIRD ETHERNET FAIL SNTP FAILURE SYSTEM EXCEPTION TEMP MONITOR UNIT NOT PROGRAMMED	Any of the major self-test errors generated (major error) Any of the minor self-test errors generated (minor error) Any self-test errors generated (generic, any error) The battery is not functioning. Return power supply module to manufacturer. Relay is not synchronized to the international time standard A direct device is configured but not connected The Direct I/O settings is for a connection that is not in a ring The configuration of modules does not match the stored order code A FlexLogic equation is incorrect "Bad IRIG-B Signal" self-test. See Chapter 7: Commands and Targets. A difference is detected between the desired and actual latch contact state A subset of the minor self-test errors generated, see Chapter 7 Link failure detected. See description in Chapter 7: Commands and Targets. See description in Chapter 7: Commands and Targets "Bad PTP Signal" self-test as described in Chapter 7 One or more GOOSE devices are not responding See description in Chapter 7: Commands and Targets See description in Chapter 7: Commands and Targets See description in Chapter 7: Commands and Targets SNTP server is not responding See description in Chapter 7: Commands and Targets Monitors ambient temperature and maximum operating temperature The **Settings > Product Setup > Installation > Relay Settings** setting is not programmed
TEMPERATURE MONITOR	TEMP MONITOR	Asserted while the ambient temperature is greater than the maximum operating temperature (80°C)
USER-PROGRAMMABLE PUSHBUTTONS	PUSHBUTTON 1 ON PUSHBUTTON 1 OFF ANY PB ON	Pushbutton number 1 is in the “On” position Pushbutton number 1 is in the “Off” position Any of twelve pushbuttons is in the “On” position
	PUSHBUTTON 2 to 6, 12, or 16 depending on front panel	Same set of operands as PUSHBUTTON 1

Some operands can be re-named by the user. These are the names of the breakers in the breaker control feature, the ID (identification) of contact inputs and outputs, the ID of virtual inputs, and the ID of virtual outputs. If the user changes the default name or ID of any of these operands, the assigned name will appear in the relay list of operands. The default names are shown in the FlexLogic operands table above.

The characteristics of the logic gates are tabulated below, and the operators available in FlexLogic are listed in the Flex-Logic operators table.

Table 5–16: FLEXLOGIC GATE CHARACTERISTICS

GATES	NUMBER OF INPUTS	OUTPUT IS '1' (= ON) IF...
NOT	1	input is '0'
OR	2 to 16	any input is '1'
AND	2 to 16	all inputs are '1'
NOR	2 to 16	all inputs are '0'
NAND	2 to 16	any input is '0'
XOR	2	only one input is '1'

Table 5–17: FLEXLOGIC OPERATORS

TYPE	SYNTAX	DESCRIPTION	NOTES
Editor	INSERT	Insert a parameter in an equation list.	
	DELETE	Delete a parameter from an equation list.	
End	END	The first END encountered signifies the last entry in the list of processed FlexLogic parameters.	
One-shot	POSITIVE ONE SHOT	One shot that responds to a positive going edge.	A 'one shot' refers to a single input gate that generates a pulse in response to an edge on the input. The output from a 'one shot' is True (positive) for only one pass through the FlexLogic equation. There is a maximum of 64 'one shots'.
	NEGATIVE ONE SHOT	One shot that responds to a negative going edge.	
	DUAL ONE SHOT	One shot that responds to both the positive and negative going edges.	
Logic gate	NOT	Logical NOT	Operates on the previous parameter.
	OR(2) ↓ OR(16)	2 input OR gate ↓ 16 input OR gate	Operates on the 2 previous parameters. ↓ Operates on the 16 previous parameters.
	AND(2) ↓ AND(16)	2 input AND gate ↓ 16 input AND gate	Operates on the 2 previous parameters. ↓ Operates on the 16 previous parameters.
	NOR(2) ↓ NOR(16)	2 input NOR gate ↓ 16 input NOR gate	Operates on the 2 previous parameters. ↓ Operates on the 16 previous parameters.
	NAND(2) ↓ NAND(16)	2 input NAND gate ↓ 16 input NAND gate	Operates on the 2 previous parameters. ↓ Operates on the 16 previous parameters.
	XOR(2)	2 input Exclusive OR gate	Operates on the 2 previous parameters.
	LATCH (S,R)	Latch (set, reset): reset-dominant	The parameter preceding LATCH(S,R) is the reset input. The parameter preceding the reset input is the set input.
Timer	TIMER 1 ↓ TIMER 32	Timer set with FlexLogic timer 1 settings. ↓ Timer set with FlexLogic timer 32 settings.	The timer is started by the preceding parameter. The output of the timer is TIMER #.
Assign virtual output	= Virt Op 1 ↓ = Virt Op 96	Assigns previous FlexLogic operand to virtual output 1. ↓ Assigns previous FlexLogic operand to virtual output 96.	The virtual output is set by the preceding parameter

5.5.2 FLEXLOGIC RULES

When forming a FlexLogic equation, the sequence in the linear array of parameters must follow these general rules:

1. Operands must precede the operator which uses the operands as inputs.
2. Operators have only one output. The output of an operator must be used to create a virtual output if it is to be used as an input to two or more operators.
3. Assigning the output of an operator to a virtual output terminates the equation.
4. A timer operator (for example, "TIMER 1") or virtual output assignment (for example, " = Virt Op 1") may only be used once. If this rule is broken, a syntax error will be declared.

5.5.3 FLEXLOGIC EVALUATION

Each equation is evaluated in the ascending order in which the parameters have been entered.

NOTE

FlexLogic provides built-in latches that by definition have a memory action, remaining in the set state after the set input has been asserted. These built-in latches are reset dominant, meaning that if logical "1" is applied to both set and reset entries simultaneously, then the output of the latch is logical "0." However, they are volatile, meaning that they reset upon removal of control power.

When making changes to FlexLogic entries in the settings, all FlexLogic equations are re-compiled whenever any new FlexLogic entry value is entered, and as a result of the re-compile all latches are reset automatically.

5.5.4 FLEXLOGIC EXAMPLE

This section provides an example of implementing logic for a typical application. The sequence of the steps is quite important as it should minimize the work necessary to develop the relay settings. Note that the example presented in the figure below is intended to demonstrate the procedure, not to solve a specific application situation.

In the example below, it is assumed that logic has already been programmed to produce virtual outputs 1 and 2, and is only a part of the full set of equations used. When using FlexLogic, it is important to make a note of each virtual output used – a virtual output designation (1 to 96) can only be properly assigned once.

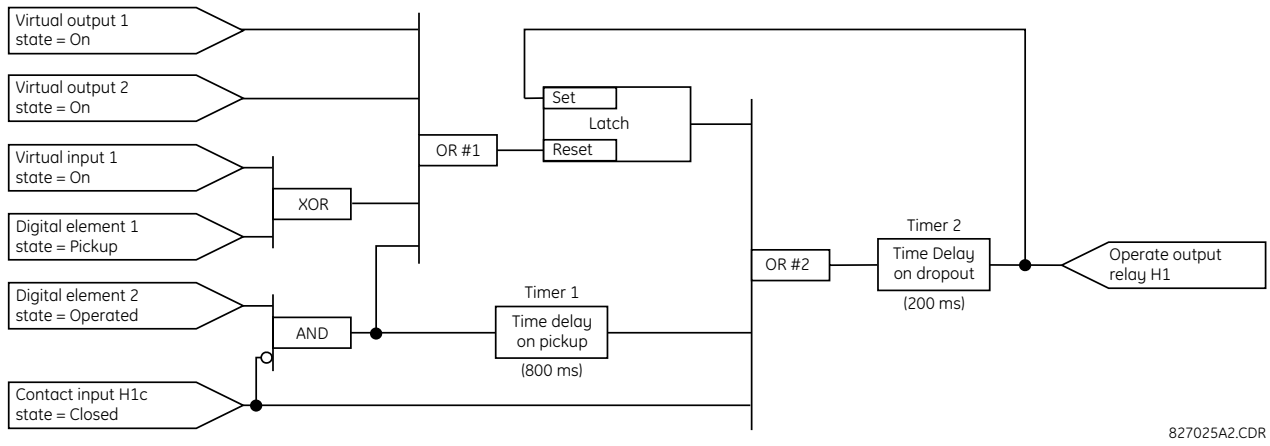

Figure 5–41: EXAMPLE LOGIC SCHEME

1. Inspect the example logic diagram to determine if the required logic can be implemented with the FlexLogic operators. If this is not possible, the logic must be altered until this condition is satisfied. Once this is done, count the inputs to each gate to verify that the number of inputs does not exceed the FlexLogic limits, which is unlikely but possible. If the number of inputs is too high, subdivide the inputs into multiple gates to produce an equivalent. For example, if 25 inputs to an AND gate are required, connect Inputs 1 through 16 to AND(16), 17 through 25 to AND(9), and the outputs from these two gates to AND(2).

   Inspect each operator between the initial operands and final virtual outputs to determine if the output from the operator is used as an input to more than one following operator. If so, the operator output must be assigned as a virtual output.

   For the example shown above, the output of the AND gate is used as an input to both OR#1 and Timer 1, and must therefore be made a virtual output and assigned the next available number (i.e. Virtual Output 3). The final output must also be assigned to a virtual output as virtual output 4, which will be programmed in the contact output section to operate relay H1 (that is, contact output H1).

   Therefore, the required logic can be implemented with two FlexLogic equations with outputs of virtual output 3 and virtual output 4 as shown below.

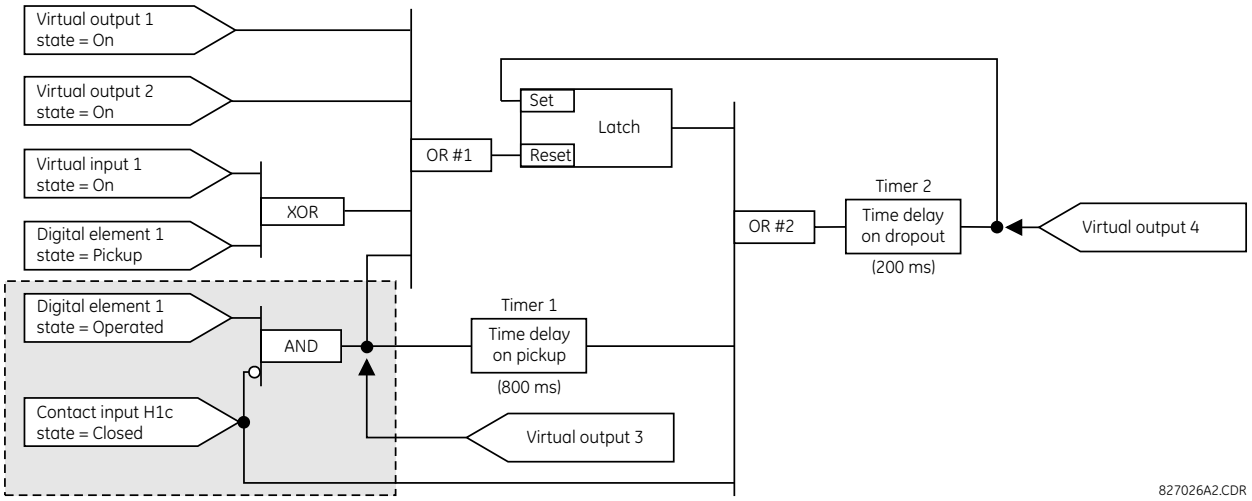

Figure 5–42: LOGIC EXAMPLE WITH VIRTUAL OUTPUTS

2. Prepare a logic diagram for the equation to produce virtual output 3, as this output will be used as an operand in the virtual output 4 equation (create the equation for every output that will be used as an operand first, so that when these operands are required they will already have been evaluated and assigned to a specific virtual output). The logic for virtual output 3 is shown below with the final output assigned.

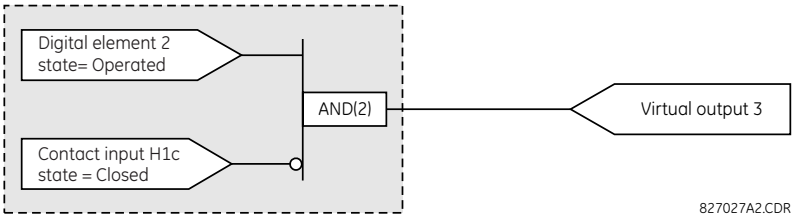

Figure 5–43: LOGIC FOR VIRTUAL OUTPUT 3

3. Prepare a logic diagram for virtual output 4, replacing the logic ahead of virtual output 3 with a symbol identified as virtual output 3, as shown below.

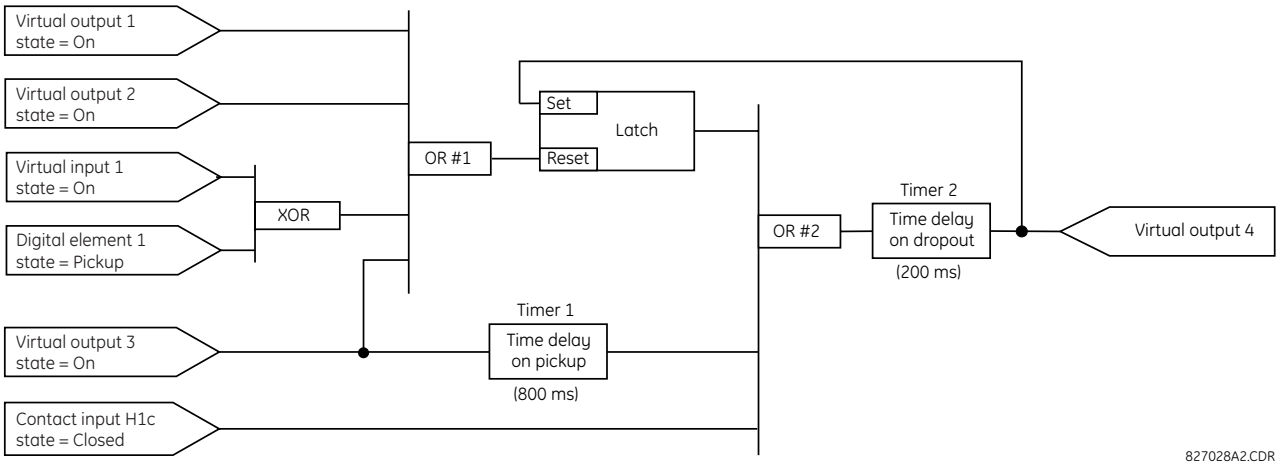

Figure 5–44: LOGIC FOR VIRTUAL OUTPUT 4

4. Program the FlexLogic equation for virtual output 3 by translating the logic into available FlexLogic parameters. The equation is formed one parameter at a time until the required logic is complete. It is generally easier to start at the out-

put end of the equation and work back towards the input, as shown in the following steps. It is also recommended to list operator inputs from bottom to top. For demonstration, the final output will be arbitrarily identified as parameter 99, and each preceding parameter decremented by one in turn. Until accustomed to using FlexLogic, it is suggested that a worksheet with a series of cells marked with the arbitrary parameter numbers be prepared, as shown below.

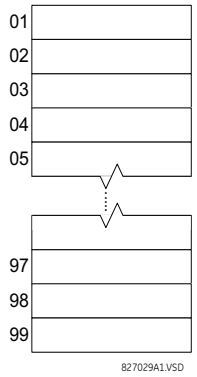

Figure 5–45: FLEXLOGIC WORKSHEET

5. Following the procedure outlined, start with parameter 99, as follows:

   99: The final output of the equation is virtual output 3, which is created by the operator "= Virt Op n". This parameter is therefore "= Virt Op 3."

   98: The gate preceding the output is an AND, which in this case requires two inputs. The operator for this gate is a 2-input AND so the parameter is “AND(2)”. Note that FlexLogic rules require that the number of inputs to most types of operators must be specified to identify the operands for the gate. As the 2-input AND will operate on the two operands preceding it, these inputs must be specified, starting with the lower.

   97: This lower input to the AND gate must be passed through an inverter (the NOT operator) so the next parameter is “NOT”. The NOT operator acts upon the operand immediately preceding it, so specify the inverter input next.

   96: The input to the NOT gate is to be contact input H1c. The ON state of a contact input can be programmed to be set when the contact is either open or closed. Assume for this example the state is to be ON for a closed contact. The operand is therefore “Cont Ip H1c On”.

   95: The last step in the procedure is to specify the upper input to the AND gate, the operated state of digital element 2. This operand is "DIG ELEM 2 OP".

   Writing the parameters in numerical order can now form the equation for virtual output 3:

```
[95] DIG ELEM 2 OP
[96] Cont Ip H1c On
[97] NOT
[98] AND(2)
[99] = Virt Op 3
```

It is now possible to check that this selection of parameters will produce the required logic by converting the set of parameters into a logic diagram. The result of this process is shown below, which is compared to the logic for virtual output 3 diagram as a check.

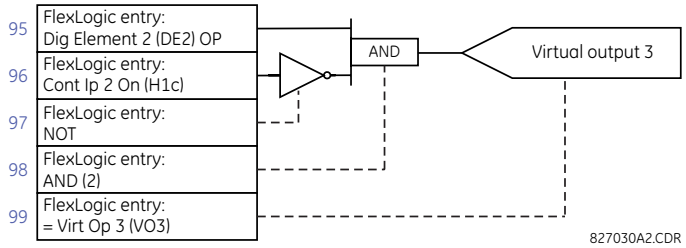

Figure 5–46: FLEXLOGIC EQUATION FOR VIRTUAL OUTPUT 3

6. Repeating the process described for virtual output 3, select the FlexLogic parameters for Virtual Output 4.

   99: The final output of the equation is virtual output 4 which is parameter “= Virt Op 4".

   98: The operator preceding the output is timer 2, which is operand “TIMER 2". Note that the settings required for the timer are established in the timer programming section.

   97: The operator preceding timer 2 is OR #2, a 3-input OR, which is parameter “OR(3)”.

   96: The lowest input to OR #2 is operand “Cont Ip H1c On”.

   95: The center input to OR #2 is operand “TIMER 1".

   94: The input to timer 1 is operand “Virt Op 3 On".

   93: The upper input to OR #2 is operand “LATCH (S,R)”.

   92: There are two inputs to a latch, and the input immediately preceding the latch reset is OR #1, a 4-input OR, which is parameter “OR(4)”.

   91: The lowest input to OR #1 is operand “Virt Op 3 On".

   90: The input just above the lowest input to OR #1 is operand “XOR(2)”.

   89: The lower input to the XOR is operand “DIG ELEM 1 PKP”.

   88: The upper input to the XOR is operand “Virt Ip 1 On".

   87: The input just below the upper input to OR #1 is operand “Virt Op 2 On".

   86: The upper input to OR #1 is operand “Virt Op 1 On".

   85: The last parameter is used to set the latch, and is operand “Virt Op 4 On".

   The equation for virtual output 4 is:

```
[85] Virt Op 4 On
[86] Virt Op 1 On
[87] Virt Op 2 On
[88] Virt Ip 1 On
[89] DIG ELEM 1 PKP
[90] XOR(2)
[91] Virt Op 3 On
[92] OR(4)
[93] LATCH (S,R)
[94] Virt Op 3 On
[95] TIMER 1
[96] Cont Ip H1c On
[97] OR(3)
[98] TIMER 2
[99] = Virt Op 4
```

It is now possible to check that the selection of parameters will produce the required logic by converting the set of parameters into a logic diagram. The result of this process is shown below, which is compared to the logic for virtual output 4 diagram as a check.

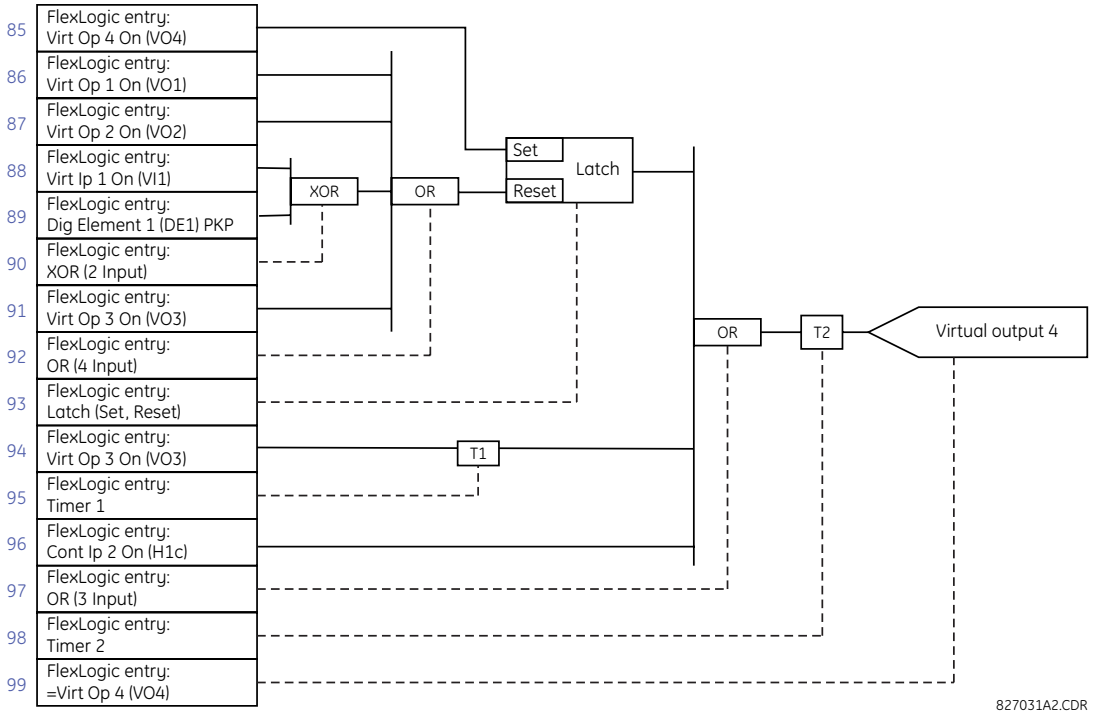

Figure 5–47: FLEXLOGIC EQUATION FOR VIRTUAL OUTPUT 4

7. Now write the complete FlexLogic expression required to implement the logic, making an effort to assemble the equation in an order where Virtual Outputs that will be used as inputs to operators are created before needed. In cases where a lot of processing is required to perform logic, this may be difficult to achieve, but in most cases will not cause problems as all logic is calculated at least four times per power frequency cycle. The possibility of a problem caused by sequential processing emphasizes the necessity to test the performance of FlexLogic before it is placed in service.

   In the following equation, virtual output 3 is used as an input to both latch 1 and timer 1 as arranged in the order shown below:

```
DIG ELEM 2 OP
Cont Ip H1c On
NOT
AND(2)
= Virt Op 3
Virt Op 4 On
Virt Op 1 On
Virt Op 2 On
Virt Ip 1 On
DIG ELEM 1 PKP
XOR(2)
Virt Op 3 On
OR(4)
LATCH (S,R)
Virt Op 3 On
TIMER 1
Cont Ip H1c On
OR(3)
TIMER 2
= Virt Op 4
END
```

   In the expression above, the virtual output 4 input to the four-input OR is listed before it is created. This is typical of a form of feedback, in this case, used to create a seal-in effect with the latch, and is correct.

8. The logic should always be tested after it is loaded into the relay, in the same fashion as has been used in the past. Testing can be simplified by placing an "END" operator within the overall set of FlexLogic equations. The equations will then only be evaluated up to the first "END" operator.

   The "On" and "Off" operands can be placed in an equation to establish a known set of conditions for test purposes, and the "INSERT" and "DELETE" commands can be used to modify equations.

5.5.5 FLEXLOGIC EQUATION EDITOR

PATH: SETTINGS ⇨⇩ FLEXLOGIC ⇨ FLEXLOGIC EQUATION EDITOR

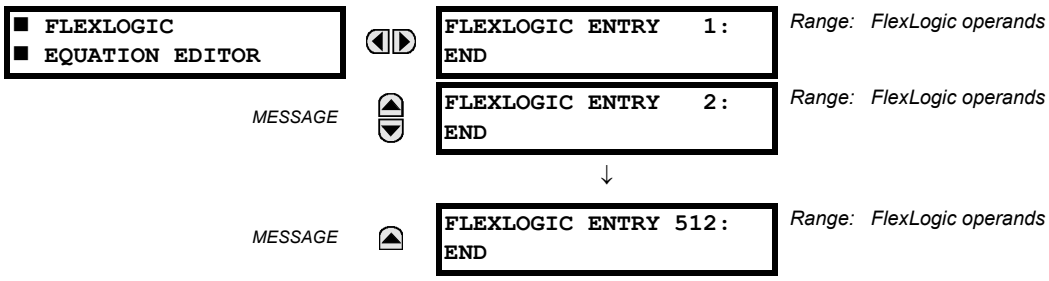

There are 512 FlexLogic entries available, numbered from 1 to 512, with default END entry settings. If a "Disabled" Element is selected as a FlexLogic entry, the associated state flag will never be set to '1'. The '+/–' key may be used when editing FlexLogic equations from the keypad to quickly scan through the major parameter types.

5.5.6 FLEXLOGIC TIMERS

PATH: SETTINGS ⇨⇩ FLEXLOGIC ⇨⇩ FLEXLOGIC TIMERS ⇨ FLEXLOGIC TIMER 1(32)

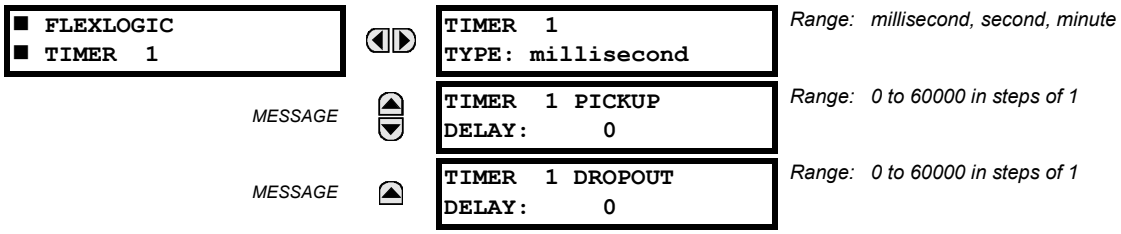

There are 32 identical FlexLogic timers available. These timers can be used as operators for FlexLogic equations.

- **TIMER 1 TYPE:** This setting is used to select the time measuring unit.
- **TIMER 1 PICKUP DELAY:** Sets the time delay to pickup. If a pickup delay is not required, set this function to "0".
- **TIMER 1 DROPOUT DELAY:** Sets the time delay to dropout. If a dropout delay is not required, set this function to "0".

PATH: SETTING ⇨⇩ FLEXLOGIC ⇨⇩ FLEXELEMENTS ⇨ FLEXELEMENT 1(16)

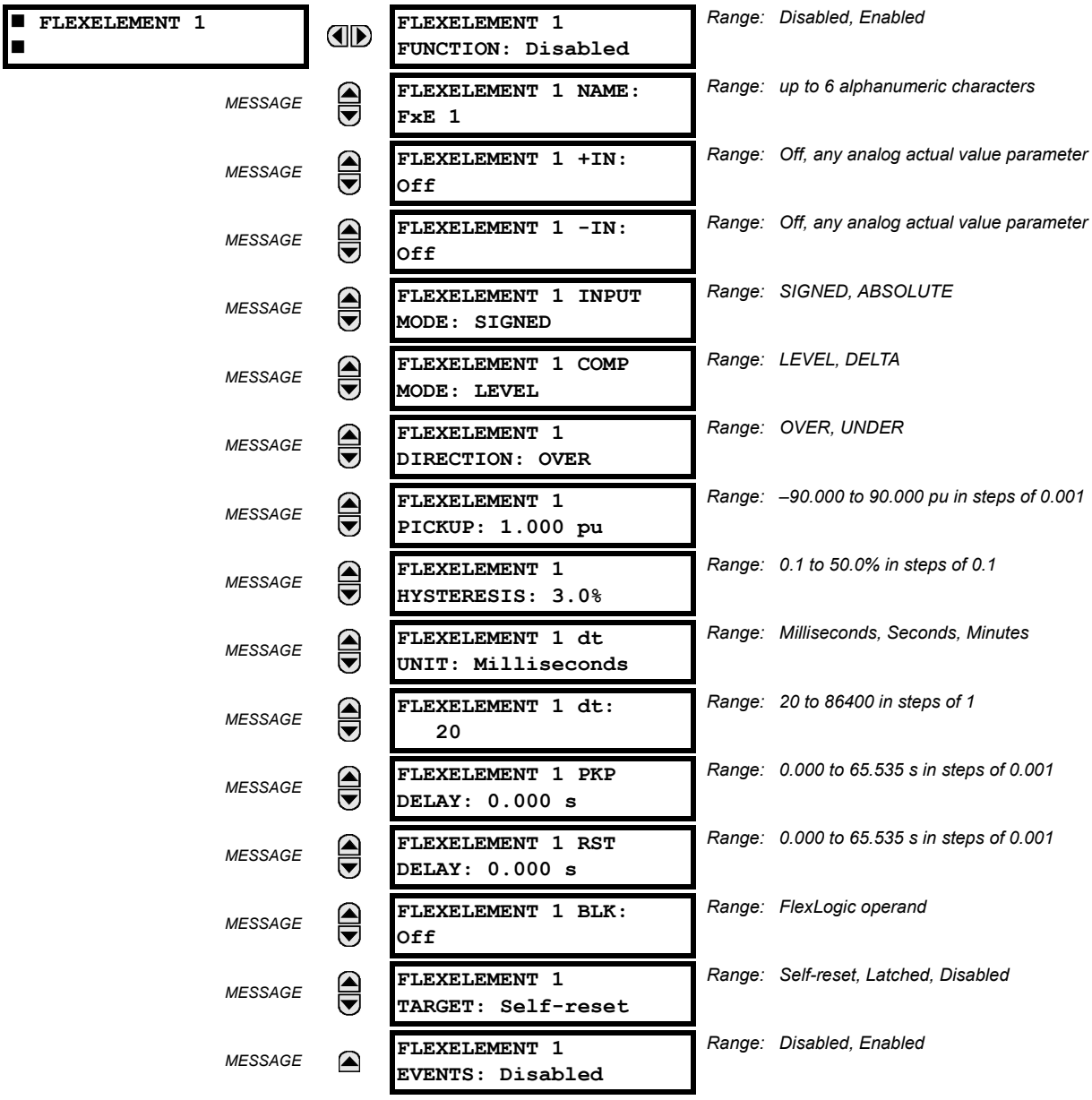

A FlexElement is a universal comparator that can be used to monitor any analog actual value calculated by the relay or a net difference of any two analog actual values of the same type. The effective operating signal could be treated as a signed number or its absolute value could be used as per user's choice.

FlexElements run every half power cycle (every four protection passes).

The element can be programmed to respond either to a signal level or to a rate-of-change (delta) over a pre-defined period of time. The output operand is asserted when the operating signal is higher than a threshold or lower than a threshold as per user's choice.

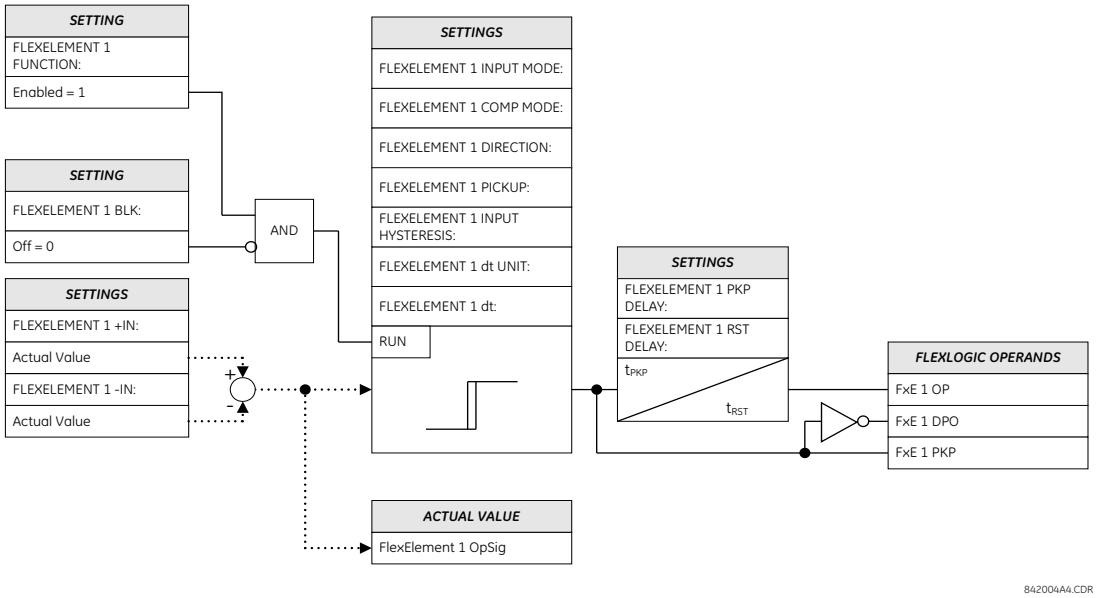

Figure 5–48: FLEXELEMENT SCHEME LOGIC

The **FLEXELEMENT 1 +IN** setting specifies the first (non-inverted) input to the FlexElement. Zero is assumed as the input if this setting is set to "Off". For proper operation of the element at least one input must be selected. Otherwise, the element will not assert its output operands.

This **FLEXELEMENT 1 –IN** setting specifies the second (inverted) input to the FlexElement. Zero is assumed as the input if this setting is set to "Off". For proper operation of the element at least one input must be selected. Otherwise, the element will not assert its output operands. This input should be used to invert the signal if needed for convenience, or to make the element respond to a differential signal such as for a top-bottom oil temperature differential alarm. The element will not operate if the two input signals are of different types, for example if one tries to use active power and phase angle to build the effective operating signal.

The element responds directly to the differential signal if the **FLEXELEMENT 1 INPUT MODE** setting is set to "Signed". The element responds to the absolute value of the differential signal if this setting is set to "Absolute". Sample applications for the "Absolute" setting include monitoring the angular difference between two phasors with a symmetrical limit angle in both directions, monitoring power regardless of its direction, or monitoring a trend.

The element responds directly to its operating signal – as defined by the **FLEXELEMENT 1 +IN**, **FLEXELEMENT 1 –IN** and **FLEXELEMENT 1 INPUT MODE** settings – if the **FLEXELEMENT 1 COMP MODE** setting is set to "Level". The element responds to the rate of change of its operating signal if the **FLEXELEMENT 1 COMP MODE** setting is set to "Delta". In this case the **FLEXELEMENT 1 dt UNIT** and **FLEXELEMENT 1 dt** settings specify how the rate of change is derived.

The **FLEXELEMENT 1 DIRECTION** setting enables the relay to respond to either high or low values of the operating signal. The following figure explains the application of the **FLEXELEMENT 1 DIRECTION**, **FLEXELEMENT 1 PICKUP** and **FLEXELEMENT 1 HYSTERESIS** settings.

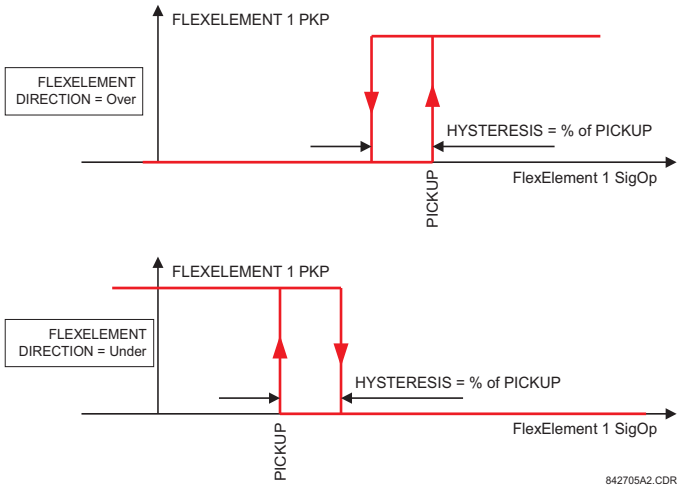

Figure 5–49: FLEXELEMENT DIRECTION, PICKUP, AND HYSTERESIS

In conjunction with the **FLEXELEMENT 1 INPUT MODE** setting the element could be programmed to provide two extra characteristics as shown in the figure below.

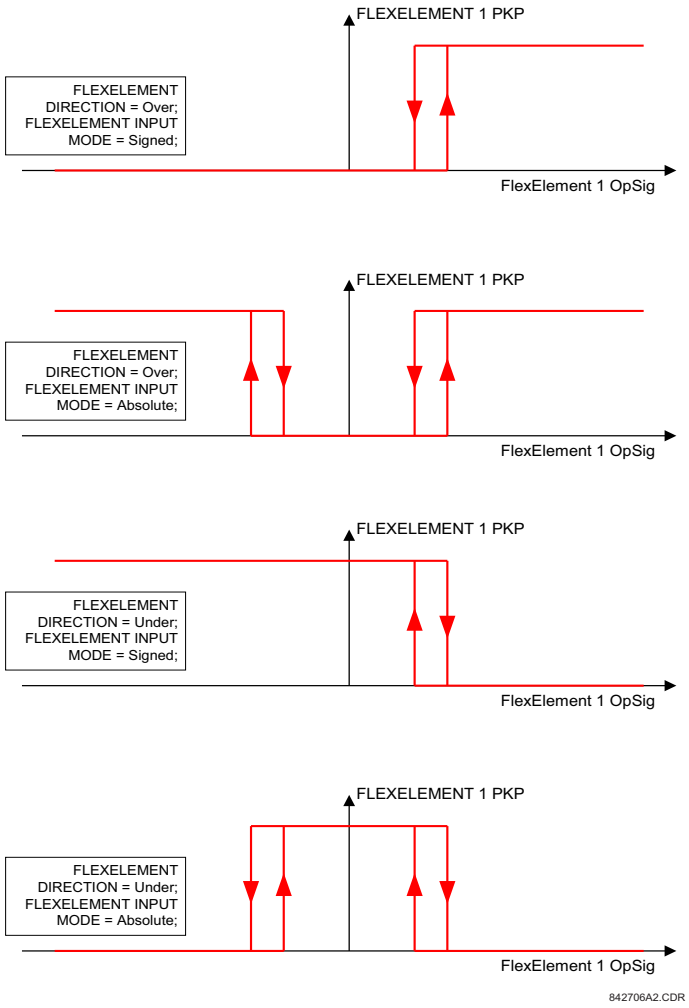

Figure 5–50: FLEXELEMENT INPUT MODE SETTING

The **FLEXELEMENT 1 PICKUP** setting specifies the operating threshold for the effective operating signal of the element. If set to "Over", the element picks up when the operating signal exceeds the **FLEXELEMENT 1 PICKUP** value. If set to "Under", the element picks up when the operating signal falls below the **FLEXELEMENT 1 PICKUP** value.

When using FlexElements for Voltage Elements, 1 pu is always equal to phase to ground voltage nominal secondary voltage, even if you select a phase to phase voltage as an operating quantity.

The **FLEXELEMENT 1 HYSTERESIS** setting controls the element dropout. It should be noticed that both the operating signal and the pickup threshold can be negative facilitating applications such as reverse power alarm protection. The FlexElement can be programmed to work with all analog actual values measured by the relay. The **FLEXELEMENT 1 PICKUP** setting is entered in per-unit values using the following definitions of the base units:

Table 5–18: FLEXELEMENT BASE UNITS

DCmA	BASE = maximum value of the **DCMA INPUT MAX** setting for the two transducers configured under the +IN and –IN inputs.
DELTA TIME	BASE = 1 µs
FREQUENCY	f_{BASE} = 1 Hz
PHASE ANGLE	φ_{BASE} = 360 degrees (see the UR angle referencing convention)
POWER FACTOR	PF_{BASE} = 1.00
RTDs	BASE = 100°C

Table 5–18: FLEXELEMENT BASE UNITS

SOURCE CURRENT	I_{BASE} = maximum nominal primary RMS value of the +IN and –IN inputs
SOURCE POWER	P_{BASE} = maximum value of $V_{BASE} \times I_{BASE}$ for the +IN and –IN inputs
SOURCE THD & HARMONICS	BASE = 1%
SOURCE VOLTAGE	V_{BASE} = maximum nominal primary RMS value of the +IN and –IN inputs

The **FLEXELEMENT 1 HYSTERESIS** setting defines the pickup–dropout relation of the element by specifying the width of the hysteresis loop as a percentage of the pickup value as shown in the FlexElement Direction, Pickup, and Hysteresis diagram.

The **FLEXELEMENT 1 DT UNIT** setting specifies the time unit for the setting **FLEXELEMENT 1 dt**. This setting is applicable only if **FLEXELEMENT 1 COMP MODE** is set to “Delta”. The **FLEXELEMENT 1 DT** setting specifies duration of the time interval for the rate of change mode of operation. This setting is applicable only if **FLEXELEMENT 1 COMP MODE** is set to “Delta”.

This **FLEXELEMENT 1 PKP DELAY** setting specifies the pickup delay of the element. The **FLEXELEMENT 1 RST DELAY** setting specifies the reset delay of the element.

PATH: SETTINGS ⇨⇩ FLEXLOGIC ⇨⇩ NON-VOLATILE LATCHES ⇨ LATCH 1(16)

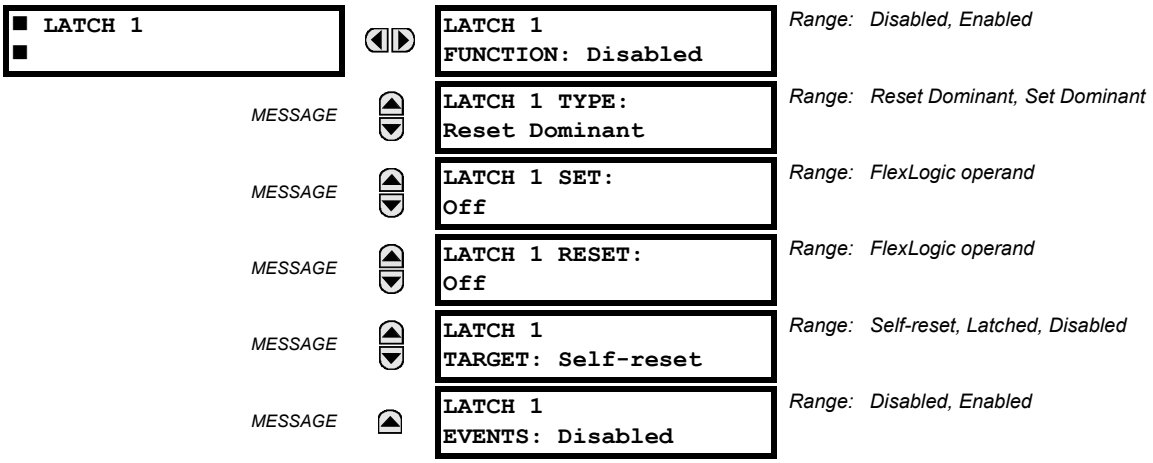

The non-volatile latches provide a permanent logical flag that is stored safely and will not reset upon reboot after the relay is powered down. Typical applications include sustaining operator commands or permanently block relay functions, such as Autorecloser, until a deliberate interface action resets the latch. The settings element operation is described below:

- **LATCH 1 TYPE**: This setting characterizes Latch 1 to be Set- or Reset-dominant.
- **LATCH 1 SET**: If asserted, the specified FlexLogic operands 'sets' Latch 1.
- **LATCH 1 RESET**: If asserted, the specified FlexLogic operand 'resets' Latch 1.

LATCH N TYPE	LATCH N SET	LATCH N RESET	LATCH N ON	LATCH N OFF
Reset Dominant	ON	OFF	ON	OFF
	OFF	OFF	Previous State	Previous State
	ON	ON	OFF	ON
	OFF	ON	OFF	ON
Set Dominant	ON	OFF	ON	OFF
	ON	ON	ON	OFF
	OFF	OFF	Previous State	Previous State
	OFF	ON	OFF	ON

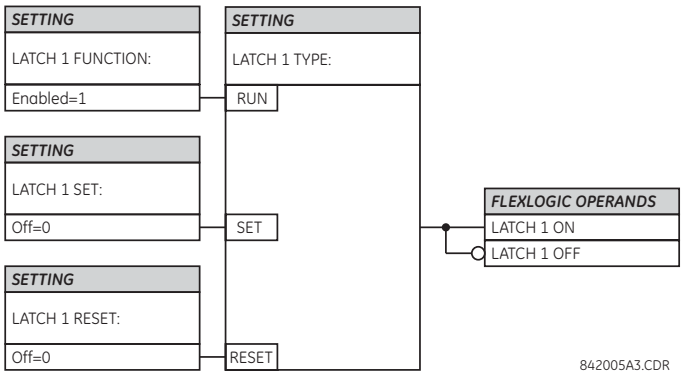

Figure 5–51: NON-VOLATILE LATCH OPERATION TABLE (N = 1 to 16) AND LOGIC

5.6.1 OVERVIEW

Each protection element can be assigned up to six different sets of settings according to setting group designations 1 to 6. The performance of these elements is defined by the active setting group at a given time. Multiple setting groups allow the user to conveniently change protection settings for different operating situations (for example, altered power system configuration, season of the year, etc.). The active setting group can be preset or selected via the **SETTING GROUPS** menu (see the Control Elements section later in this chapter). See also the Introduction to Elements section at the beginning of this chapter.

5.6.2 SETTING GROUP

PATH: SETTINGS ⇨⇩ GROUPED ELEMENTS ⇨ SETTING GROUP 1(6)

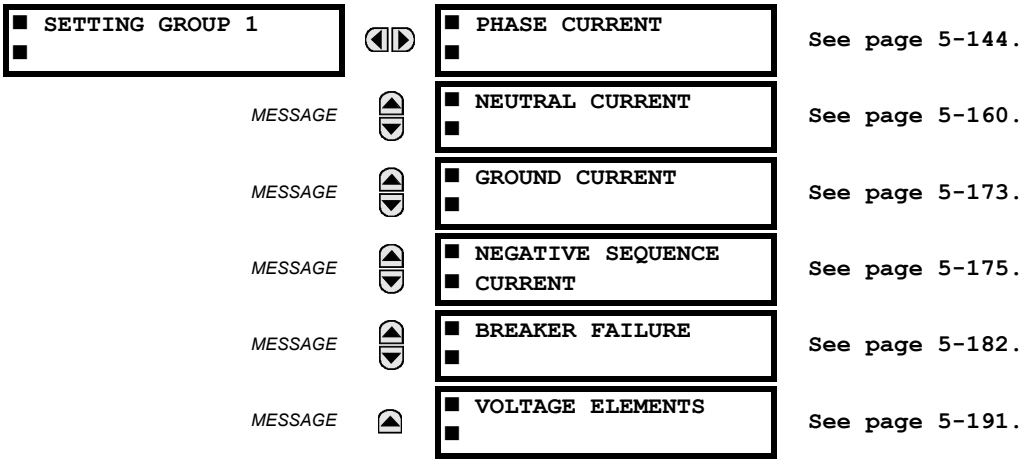

Each of the six setting group menus is identical. Setting group 1 (the default active group) automatically becomes active if no other group is active (see the Control Elements section for additional details).

If the device incorrectly switches to group 1 after power cycling, upgrade the firmware to version 7.25, 7.31, or later to correct this issue.

a) MAIN MENU

PATH: SETTINGS ⇨⇩ GROUPED ELEMENTS ⇨ SETTING GROUP 1(6) ⇨⇩ PHASE CURRENT

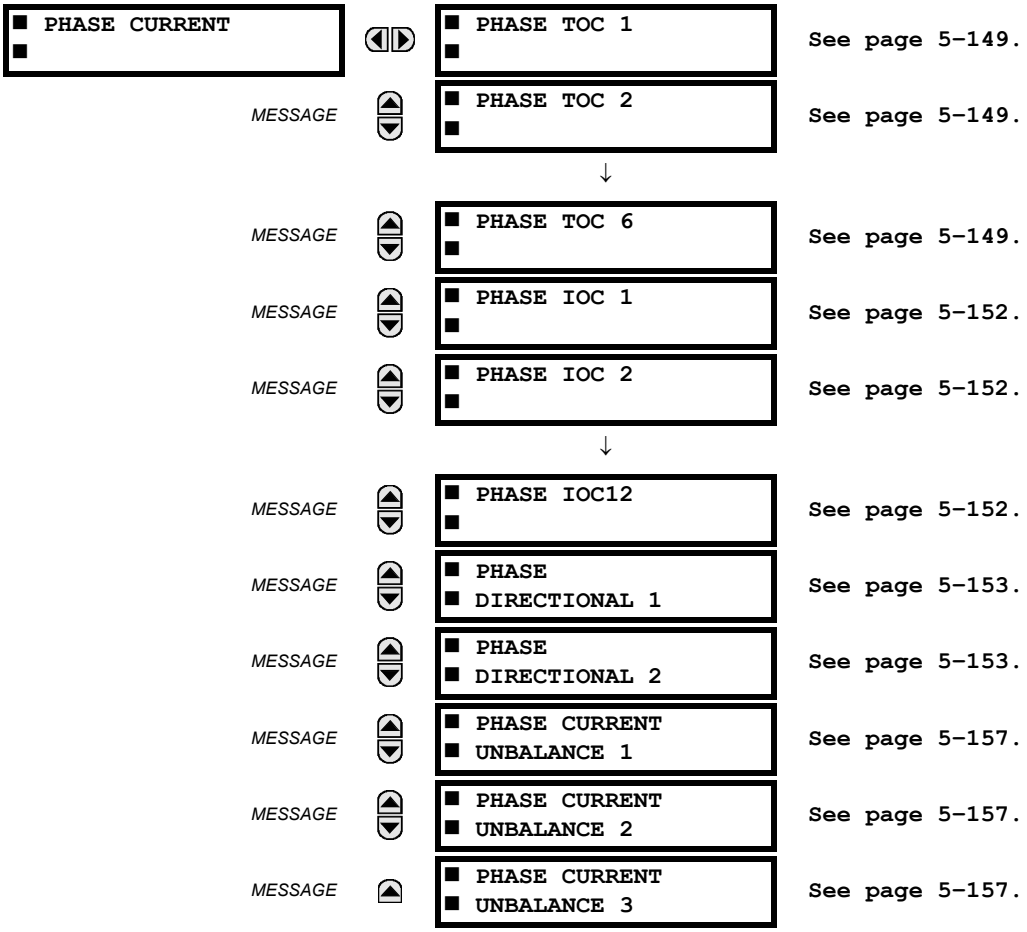

b) INVERSE TOC CURVE CHARACTERISTICS

The inverse time overcurrent curves used by the time overcurrent elements are the IEEE, IEC, GE Type IAC, and I^2t standard curve shapes. This allows for simplified coordination with downstream devices.

If none of these curve shapes is adequate, FlexCurves may be used to customize the inverse time curve characteristics. The definite time curve is also an option that may be appropriate if only simple protection is required.

Table 5–19: OVERCURRENT CURVE TYPES

IEEE	IEC	GE TYPE IAC	OTHER
IEEE Extremely Inverse	IEC Curve A (BS142)	IAC Extremely Inverse	I^2t
IEEE Very Inverse	IEC Curve B (BS142)	IAC Very Inverse	FlexCurves A, B, C, and D
IEEE Moderately Inverse	IEC Curve C (BS142)	IAC Inverse	Recloser Curves
	IEC Short Inverse	IAC Short Inverse	Definite Time

A time dial multiplier setting allows selection of a multiple of the base curve shape (where the time dial multiplier = 1) with the curve shape (**CURVE**) setting. Unlike the electromechanical time dial equivalent, operate times are directly proportional to the time multiplier (**TD MULTIPLIER**) setting value. For example, all times for a multiplier of 10 are 10 times the multiplier 1 or base curve values. Setting the multiplier to zero results in an instantaneous response to all current levels above pickup.

Time overcurrent time calculations are made with an internal *energy capacity* memory variable. When this variable indicates that the energy capacity has reached 100%, a time overcurrent element will operate. If less than 100% energy capacity is accumulated in this variable and the current falls below the dropout threshold of 97 to 98% of the pickup value, the variable must be reduced. Two methods of this resetting operation are available: “Instantaneous” and “Timed”. The “Instantaneous” selection is intended for applications with other relays, such as most static relays, which set the energy capacity directly to zero when the current falls below the reset threshold. The “Timed” selection can be used where the relay must coordinate with electromechanical relays.

The URs calculate operate time corresponding to the values in the range of 1.03 to 20 multiples of the pickup current. Above 20 multiples of the pickup current, URs clamp the operate time to the value at a multiple of 20, resulting in the flat part of the characteristics. Reset time is calculated in the range of 0 to 0.97 multiples of the pickup current.

IEEE CURVES

The IEEE time overcurrent curve shapes conform to industry standards and the IEEE C37.112-1996 curve classifications for extremely, very, and moderately inverse. The IEEE curves are derived from the formulae:

$$T = TDM \times \left[\frac{A}{\left(\frac{I}{I_{pickup}} \right)^{p} - 1} + B \right], \quad T_{RESET} = TDM \times \left[\frac{t_r}{1 - \left(\frac{I}{I_{pickup}} \right)^{2}} \right] \qquad \textbf{(EQ 5.7)}$$

where: T = operate time (in seconds), TDM = Multiplier setting, I = input current, I_{pickup} = Pickup Current setting
A, B, p = constants, T_{RESET} = reset time in seconds (assuming energy capacity is 100% and **RESET** is “Timed”),
t_r = characteristic constant

Table 5–20: IEEE INVERSE TIME CURVE CONSTANTS

IEEE CURVE SHAPE	A	B	P	T_R
IEEE Extremely Inverse	28.2	0.1217	2.0000	29.1
IEEE Very Inverse	19.61	0.491	2.0000	21.6
IEEE Moderately Inverse	0.0515	0.1140	0.02000	4.85

Table 5–21: IEEE CURVE TRIP TIMES (IN SECONDS)

MULTIPLIER (TDM)	CURRENT (I / I_{pickup})									
	1.5	2.0	3.0	4.0	5.0	6.0	7.0	8.0	9.0	10.0
IEEE EXTREMELY INVERSE										
0.5	11.341	4.761	1.823	1.001	0.648	0.464	0.355	0.285	0.237	0.203
1.0	22.682	9.522	3.647	2.002	1.297	0.927	0.709	0.569	0.474	0.407
2.0	45.363	19.043	7.293	4.003	2.593	1.855	1.418	1.139	0.948	0.813
4.0	90.727	38.087	14.587	8.007	5.187	3.710	2.837	2.277	1.897	1.626
6.0	136.090	57.130	21.880	12.010	7.780	5.564	4.255	3.416	2.845	2.439
8.0	181.454	76.174	29.174	16.014	10.374	7.419	5.674	4.555	3.794	3.252
10.0	226.817	95.217	36.467	20.017	12.967	9.274	7.092	5.693	4.742	4.065
IEEE VERY INVERSE										
0.5	8.090	3.514	1.471	0.899	0.654	0.526	0.450	0.401	0.368	0.345
1.0	16.179	7.028	2.942	1.798	1.308	1.051	0.900	0.802	0.736	0.689
2.0	32.358	14.055	5.885	3.597	2.616	2.103	1.799	1.605	1.472	1.378
4.0	64.716	28.111	11.769	7.193	5.232	4.205	3.598	3.209	2.945	2.756
6.0	97.074	42.166	17.654	10.790	7.849	6.308	5.397	4.814	4.417	4.134
8.0	129.432	56.221	23.538	14.387	10.465	8.410	7.196	6.418	5.889	5.513
10.0	161.790	70.277	29.423	17.983	13.081	10.513	8.995	8.023	7.361	6.891
IEEE MODERATELY INVERSE										
0.5	3.220	1.902	1.216	0.973	0.844	0.763	0.706	0.663	0.630	0.603
1.0	6.439	3.803	2.432	1.946	1.688	1.526	1.412	1.327	1.260	1.207
2.0	12.878	7.606	4.864	3.892	3.377	3.051	2.823	2.653	2.521	2.414
4.0	25.756	15.213	9.729	7.783	6.753	6.102	5.647	5.307	5.041	4.827
6.0	38.634	22.819	14.593	11.675	10.130	9.153	8.470	7.960	7.562	7.241

Table 5–21: IEEE CURVE TRIP TIMES (IN SECONDS)

MULTIPLIER (TDM)	CURRENT (I / I_{pickup})									
	1.5	2.0	3.0	4.0	5.0	6.0	7.0	8.0	9.0	10.0
8.0	51.512	30.426	19.458	15.567	13.507	12.204	11.294	10.614	10.083	9.654
10.0	64.390	38.032	24.322	19.458	16.883	15.255	14.117	13.267	12.604	12.068

IEC CURVES

For European applications, the relay offers three standard curves defined in IEC 255-4 and British standard BS142. These are defined as IEC Curve A, IEC Curve B, and IEC Curve C. The formulae for these curves are:

$$T = TDM \times \left[\frac{K}{(I/I_{pickup})^{E} - 1} \right], \; T_{RESET} = TDM \times \left[\frac{t_r}{1 - (I/I_{pickup})^{2}} \right] \quad \textbf{(EQ 5.8)}$$

where: T = operate time (in seconds), TDM = Multiplier setting, I = input current, I_{pickup} = Pickup Current setting, K, E = constants, t_r = characteristic constant, and T_{RESET} = reset time in seconds (assuming energy capacity is 100% and **RESET** is "Timed")

Table 5–22: IEC (BS) INVERSE TIME CURVE CONSTANTS

IEC (BS) CURVE SHAPE	K	E	T_R
IEC Curve A (BS142)	0.140	0.020	9.7
IEC Curve B (BS142)	13.500	1.000	43.2
IEC Curve C (BS142)	80.000	2.000	58.2
IEC Short Inverse	0.050	0.040	0.500

Table 5–23: IEC CURVE TRIP TIMES (IN SECONDS)

MULTIPLIER (TDM)	CURRENT (I / I_{pickup})									
	1.5	2.0	3.0	4.0	5.0	6.0	7.0	8.0	9.0	10.0
IEC CURVE A										
0.05	0.860	0.501	0.315	0.249	0.214	0.192	0.176	0.165	0.156	0.149
0.10	1.719	1.003	0.630	0.498	0.428	0.384	0.353	0.330	0.312	0.297
0.20	3.439	2.006	1.260	0.996	0.856	0.767	0.706	0.659	0.623	0.594
0.40	6.878	4.012	2.521	1.992	1.712	1.535	1.411	1.319	1.247	1.188
0.60	10.317	6.017	3.781	2.988	2.568	2.302	2.117	1.978	1.870	1.782
0.80	13.755	8.023	5.042	3.984	3.424	3.070	2.822	2.637	2.493	2.376
1.00	17.194	10.029	6.302	4.980	4.280	3.837	3.528	3.297	3.116	2.971
IEC CURVE B										
0.05	1.350	0.675	0.338	0.225	0.169	0.135	0.113	0.096	0.084	0.075
0.10	2.700	1.350	0.675	0.450	0.338	0.270	0.225	0.193	0.169	0.150
0.20	5.400	2.700	1.350	0.900	0.675	0.540	0.450	0.386	0.338	0.300
0.40	10.800	5.400	2.700	1.800	1.350	1.080	0.900	0.771	0.675	0.600
0.60	16.200	8.100	4.050	2.700	2.025	1.620	1.350	1.157	1.013	0.900
0.80	21.600	10.800	5.400	3.600	2.700	2.160	1.800	1.543	1.350	1.200
1.00	27.000	13.500	6.750	4.500	3.375	2.700	2.250	1.929	1.688	1.500
IEC CURVE C										
0.05	3.200	1.333	0.500	0.267	0.167	0.114	0.083	0.063	0.050	0.040
0.10	6.400	2.667	1.000	0.533	0.333	0.229	0.167	0.127	0.100	0.081
0.20	12.800	5.333	2.000	1.067	0.667	0.457	0.333	0.254	0.200	0.162
0.40	25.600	10.667	4.000	2.133	1.333	0.914	0.667	0.508	0.400	0.323
0.60	38.400	16.000	6.000	3.200	2.000	1.371	1.000	0.762	0.600	0.485
0.80	51.200	21.333	8.000	4.267	2.667	1.829	1.333	1.016	0.800	0.646
1.00	64.000	26.667	10.000	5.333	3.333	2.286	1.667	1.270	1.000	0.808
IEC SHORT TIME										

Table 5–23: IEC CURVE TRIP TIMES (IN SECONDS)

MULTIPLIER (TDM)	CURRENT (I / I_{pickup})									
	1.5	2.0	3.0	4.0	5.0	6.0	7.0	8.0	9.0	10.0
0.05	0.153	0.089	0.056	0.044	0.038	0.034	0.031	0.029	0.027	0.026
0.10	0.306	0.178	0.111	0.088	0.075	0.067	0.062	0.058	0.054	0.052
0.20	0.612	0.356	0.223	0.175	0.150	0.135	0.124	0.115	0.109	0.104
0.40	1.223	0.711	0.445	0.351	0.301	0.269	0.247	0.231	0.218	0.207
0.60	1.835	1.067	0.668	0.526	0.451	0.404	0.371	0.346	0.327	0.311
0.80	2.446	1.423	0.890	0.702	0.602	0.538	0.494	0.461	0.435	0.415
1.00	3.058	1.778	1.113	0.877	0.752	0.673	0.618	0.576	0.544	0.518

IAC CURVES

The curves for the General Electric type IAC relay family are derived from the formulae:

$$T = \text{TDM} \times \left(A + \frac{B}{(I/I_{pkp}) - C} + \frac{D}{((I/I_{pkp}) - C)^2} + \frac{E}{((I/I_{pkp}) - C)^3} \right), \; T_{RESET} = TDM \times \left[\frac{t_r}{1 - (I/I_{pkp})^2} \right] \quad \textbf{(EQ 5.9)}$$

where: T = operate time (in seconds), TDM = Multiplier setting, I = Input current, I_{pkp} = Pickup Current setting, A *to* E = constants, t_r = characteristic constant, and T_{RESET} = reset time in seconds (assuming energy capacity is 100% and **RESET** is "Timed")

Table 5–24: GE TYPE IAC INVERSE TIME CURVE CONSTANTS

IAC CURVE SHAPE	A	B	C	D	E	T_R
IAC Extreme Inverse	0.0040	0.6379	0.6200	1.7872	0.2461	6.008
IAC Very Inverse	0.0900	0.7955	0.1000	–1.2885	7.9586	4.678
IAC Inverse	0.2078	0.8630	0.8000	–0.4180	0.1947	0.990
IAC Short Inverse	0.0428	0.0609	0.6200	–0.0010	0.0221	0.222

Table 5–25: IAC CURVE TRIP TIMES

MULTIPLIER (TDM)	CURRENT (I / I_{pickup})									
	1.5	2.0	3.0	4.0	5.0	6.0	7.0	8.0	9.0	10.0
IAC EXTREMELY INVERSE										
0.5	1.699	0.749	0.303	0.178	0.123	0.093	0.074	0.062	0.053	0.046
1.0	3.398	1.498	0.606	0.356	0.246	0.186	0.149	0.124	0.106	0.093
2.0	6.796	2.997	1.212	0.711	0.491	0.372	0.298	0.248	0.212	0.185
4.0	13.591	5.993	2.423	1.422	0.983	0.744	0.595	0.495	0.424	0.370
6.0	20.387	8.990	3.635	2.133	1.474	1.115	0.893	0.743	0.636	0.556
8.0	27.183	11.987	4.846	2.844	1.966	1.487	1.191	0.991	0.848	0.741
10.0	33.979	14.983	6.058	3.555	2.457	1.859	1.488	1.239	1.060	0.926
IAC VERY INVERSE										
0.5	1.451	0.656	0.269	0.172	0.133	0.113	0.101	0.093	0.087	0.083
1.0	2.901	1.312	0.537	0.343	0.266	0.227	0.202	0.186	0.174	0.165
2.0	5.802	2.624	1.075	0.687	0.533	0.453	0.405	0.372	0.349	0.331
4.0	11.605	5.248	2.150	1.374	1.065	0.906	0.810	0.745	0.698	0.662
6.0	17.407	7.872	3.225	2.061	1.598	1.359	1.215	1.117	1.046	0.992
8.0	23.209	10.497	4.299	2.747	2.131	1.813	1.620	1.490	1.395	1.323
10.0	29.012	13.121	5.374	3.434	2.663	2.266	2.025	1.862	1.744	1.654
IAC INVERSE										
0.5	0.578	0.375	0.266	0.221	0.196	0.180	0.168	0.160	0.154	0.148
1.0	1.155	0.749	0.532	0.443	0.392	0.360	0.337	0.320	0.307	0.297
2.0	2.310	1.499	1.064	0.885	0.784	0.719	0.674	0.640	0.614	0.594

Table 5–25: IAC CURVE TRIP TIMES

MULTIPLIER (TDM)	CURRENT (I / I_{pickup})									
	1.5	2.0	3.0	4.0	5.0	6.0	7.0	8.0	9.0	10.0
4.0	4.621	2.997	2.128	1.770	1.569	1.439	1.348	1.280	1.229	1.188
6.0	6.931	4.496	3.192	2.656	2.353	2.158	2.022	1.921	1.843	1.781
8.0	9.242	5.995	4.256	3.541	3.138	2.878	2.695	2.561	2.457	2.375
10.0	11.552	7.494	5.320	4.426	3.922	3.597	3.369	3.201	3.072	2.969
IAC SHORT INVERSE										
0.5	0.072	0.047	0.035	0.031	0.028	0.027	0.026	0.026	0.025	0.025
1.0	0.143	0.095	0.070	0.061	0.057	0.054	0.052	0.051	0.050	0.049
2.0	0.286	0.190	0.140	0.123	0.114	0.108	0.105	0.102	0.100	0.099
4.0	0.573	0.379	0.279	0.245	0.228	0.217	0.210	0.204	0.200	0.197
6.0	0.859	0.569	0.419	0.368	0.341	0.325	0.314	0.307	0.301	0.296
8.0	1.145	0.759	0.559	0.490	0.455	0.434	0.419	0.409	0.401	0.394
10.0	1.431	0.948	0.699	0.613	0.569	0.542	0.524	0.511	0.501	0.493

I2t CURVES

The curves for the I^2t are derived from the formulae:

$$T = \text{TDM} \times \left[\frac{100}{\left(\frac{I}{I_{pickup}} \right)^2} \right], \quad T_{RESET} = \text{TDM} \times \left[\frac{100}{\left(\frac{I}{I_{pickup}} \right)^{-2}} \right] \qquad \textbf{(EQ 5.10)}$$

where: T = Operate Time (sec.); TDM = Multiplier Setting; I = Input Current; I_{pickup} = Pickup Current Setting; T_{RESET} = Reset Time in sec. (assuming energy capacity is 100% and RESET: Timed)

Table 5–26: I^2T CURVE TRIP TIMES

MULTIPLIER (TDM)	CURRENT (I / I_{pickup})									
	1.5	2.0	3.0	4.0	5.0	6.0	7.0	8.0	9.0	10.0
0.01	0.44	0.25	0.11	0.06	0.04	0.03	0.02	0.02	0.01	0.01
0.10	4.44	2.50	1.11	0.63	0.40	0.28	0.20	0.16	0.12	0.10
1.00	44.44	25.00	11.11	6.25	4.00	2.78	2.04	1.56	1.23	1.00
10.00	444.44	250.00	111.11	62.50	40.00	27.78	20.41	15.63	12.35	10.00
100.00	4444.4	2500.0	1111.1	625.00	400.00	277.78	204.08	156.25	123.46	100.00
600.00	26666.7	15000.0	6666.7	3750.0	2400.0	1666.7	1224.5	937.50	740.74	600.00

FLEXCURVES

The custom FlexCurves are described in detail in the FlexCurves section of this chapter. The curve shapes for the FlexCurves are derived from the formulae:

$$T = \text{TDM} \times \left[\text{FlexCurve Time at } \left(\frac{I}{I_{pickup}} \right) \right] \text{ when } \left(\frac{I}{I_{pickup}} \right) \geq 1.00 \qquad \textbf{(EQ 5.11)}$$

$$T_{RESET} = \text{TDM} \times \left[\text{FlexCurve Time at } \left(\frac{I}{I_{pickup}} \right) \right] \text{ when } \left(\frac{I}{I_{pickup}} \right) \leq 0.98 \qquad \textbf{(EQ 5.12)}$$

where: T = Operate Time (sec.), TDM = Multiplier setting
I = Input Current, I_{pickup} = Pickup Current setting
T_{RESET} = Reset Time in seconds (assuming energy capacity is 100% and RESET: Timed)

DEFINITE TIME CURVE

The Definite Time curve shape operates as soon as the pickup level is exceeded for a specified period of time. The base definite time curve delay is in seconds. The curve multiplier of 0.00 to 600.00 makes this delay adjustable from instantaneous to 600.00 seconds in steps of 10 ms.

$$T = \text{TDM in seconds, when } I > I_{pickup} \quad \textbf{(EQ 5.13)}$$

$$T_{RESET} = \text{TDM in seconds} \quad \textbf{(EQ 5.14)}$$

where: T = Operate Time (sec.), TDM = Multiplier setting
I = Input Current, I_{pickup} = Pickup Current setting
T_{RESET} = Reset Time in seconds (assuming energy capacity is 100% and RESET: Timed)

RECLOSER CURVES

The C70 uses the FlexCurve feature to facilitate programming of 41 recloser curves. See the FlexCurve section in this chapter for details.

c) PHASE TIME OVERCURRENT (ANSI 51P, IEC PTOC)

PATH: SETTINGS ⇨⇩ GROUPED ELEMENTS ⇨ SETTING GROUP 1(6) ⇨ PHASE CURRENT ⇨ PHASE TOC1(6)

■ PHASE TOC1 ■		PHASE TOC1 FUNCTION: Disabled	*Range: Disabled, Enabled*
	MESSAGE	PHASE TOC1 SIGNAL SOURCE: SRC 1	*Range: SRC 1, SRC 2, SRC 3, SRC 4, SRC 5, SRC 6*
	MESSAGE	PHASE TOC1 INPUT: Phasor	*Range: Phasor, RMS*
	MESSAGE	PHASE TOC1 PICKUP: 1.000 pu	*Range: 0.000 to 30.000 pu in steps of 0.001*
	MESSAGE	PHASE TOC1 CURVE: IEEE Mod Inv	*Range: See Overcurrent Curve Types table*
	MESSAGE	PHASE TOC1 TD MULTIPLIER: 1.00	*Range: 0.00 to 600.00 in steps of 0.01*
	MESSAGE	PHASE TOC1 RESET: Instantaneous	*Range: Instantaneous, Timed*
	MESSAGE	PHASE TOC1 VOLTAGE RESTRAINT: Disabled	*Range: Disabled, Enabled*
	MESSAGE	PHASE TOC1 BLOCK A: Off	*Range: FlexLogic operand*
	MESSAGE	PHASE TOC1 BLOCK B: Off	*Range: FlexLogic operand*
	MESSAGE	PHASE TOC1 BLOCK C: Off	*Range: FlexLogic operand*
	MESSAGE	PHASE TOC1 TARGET: Self-reset	*Range: Self-reset, Latched, Disabled*
	MESSAGE	PHASE TOC1 EVENTS: Disabled	*Range: Disabled, Enabled*

The phase time overcurrent element can provide a desired time-delay operating characteristic versus the applied current or be used as a simple definite time element. The phase current input quantities may be programmed as fundamental phasor magnitude or total waveform RMS magnitude as required by the application.

Two methods of resetting operation are available: “Timed” and “Instantaneous” (see the Inverse TOC Curve Characteristics section earlier for details on curve setup, trip times, and reset operation). When the element is blocked, the time accumulator will reset according to the reset characteristic. For example, if the element reset characteristic is set to “Instantaneous” and the element is blocked, the time accumulator will be cleared immediately.

The **PHASE TOC1 PICKUP** setting can be dynamically reduced by a voltage restraint feature (when enabled). This is accomplished via the multipliers (Mvr) corresponding to the phase-phase voltages of the voltage restraint characteristic curve (see the figure below); the pickup level is calculated as ‘Mvr’ times the **PHASE TOC1 PICKUP** setting. If the voltage restraint feature is disabled, the pickup level always remains at the setting value.

The Phase TOC element can be used as a basic thermal overload protection element, using I^2t curves. The thermal time characteristic with I^2t is based on the current squared, integrated over time during fault. The PHASE TOC 1 I2t RST operand is asserted indicating that protected apparatus is cooled down and can be safely put back into service.

Time to assert this operand after PHASE TOC 1 operated with I^2t curves is estimated using following formula.

$$t = \tau \times \ln\left(\left(\frac{I_{PKP}}{I_F}\right)^2\right) \quad \textbf{(EQ 5.15)}$$

where

τ is a time constant fixed to a 10 minute value

I_{PKP} is a pickup setting of TOC

I_F is a maximum phase fault current

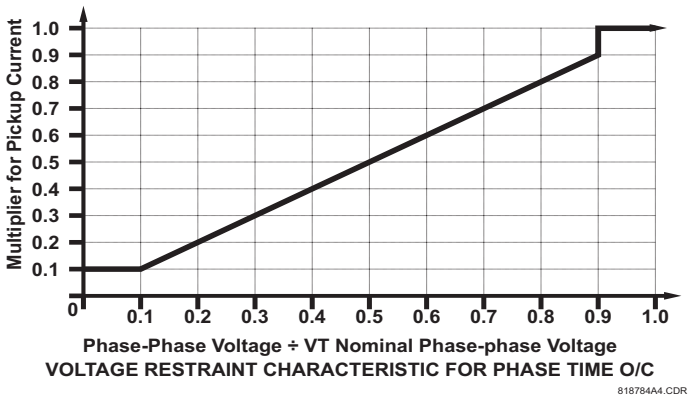

Figure 5–52: PHASE TIME OVERCURRENT VOLTAGE RESTRAINT CHARACTERISTIC

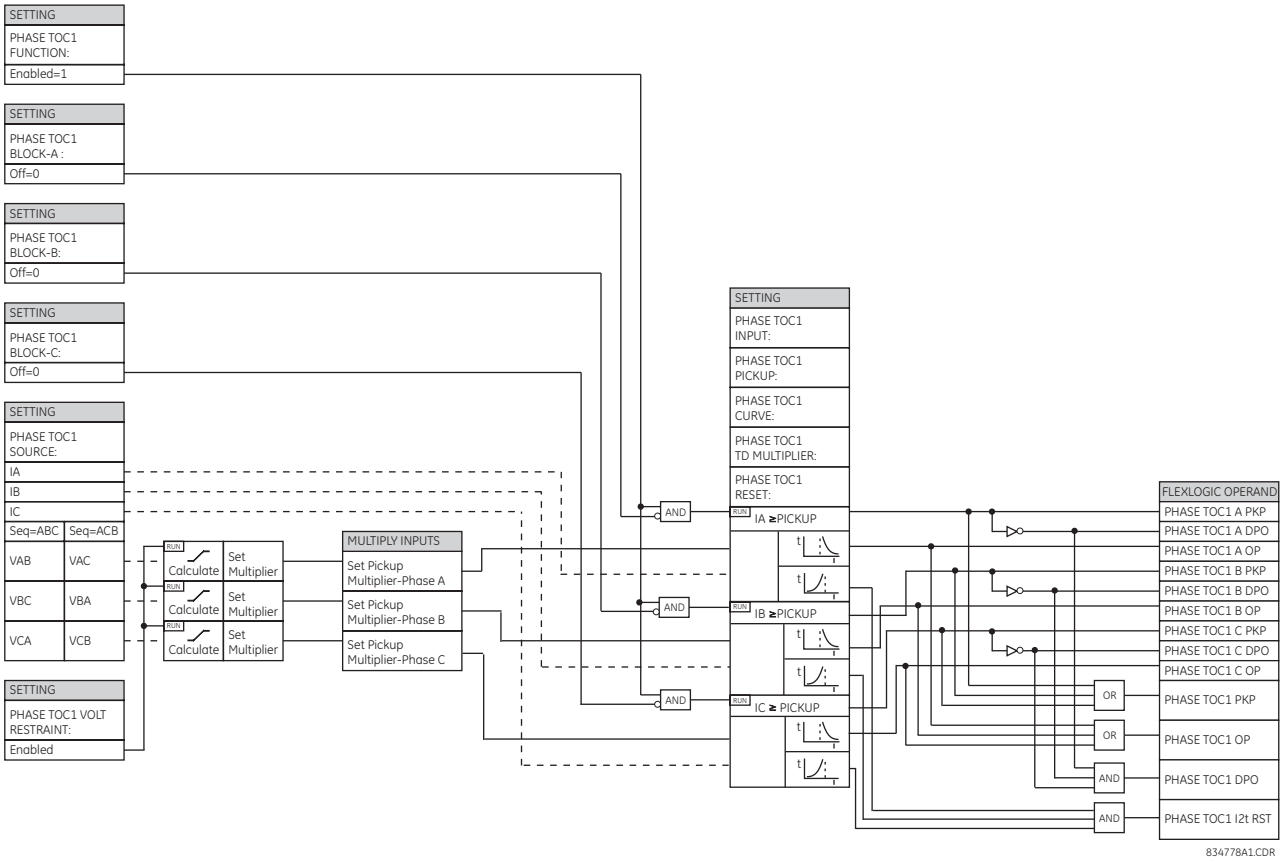

Figure 5–53: PHASE TIME OVERCURRENT 1 SCHEME LOGIC

d) PHASE INSTANTANEOUS OVERCURRENT (ANSI 50P, IEC PIOC)

PATH: SETTINGS ⇨⇩ GROUPED ELEMENTS ⇨ SETTING GROUP 1(6) ⇨ PHASE CURRENT ⇨ PHASE IOC 1(12)

■ PHASE IOC 1 ■		PHASE IOC1 FUNCTION: Disabled	*Range: Disabled, Enabled*
	MESSAGE	PHASE IOC1 SIGNAL SOURCE: SRC 1	*Range: SRC 1, SRC 2, SRC 3, SRC 4, SRC 5, SRC 6*
	MESSAGE	PHASE IOC1 PICKUP: 1.000 pu	*Range: 0.000 to 30.000 pu in steps of 0.001*
	MESSAGE	PHASE IOC1 PICKUP DELAY: 0.00 s	*Range: 0.00 to 600.00 s in steps of 0.01*
	MESSAGE	PHASE IOC1 RESET DELAY: 0.00 s	*Range: 0.00 to 600.00 s in steps of 0.01*
	MESSAGE	PHASE IOC1 BLOCK A: Off	*Range: FlexLogic operand*
	MESSAGE	PHASE IOC1 BLOCK B: Off	*Range: FlexLogic operand*
	MESSAGE	PHASE IOC1 BLOCK C: Off	*Range: FlexLogic operand*
	MESSAGE	PHASE IOC1 TARGET: Self-reset	*Range: Self-reset, Latched, Disabled*
	MESSAGE	PHASE IOC1 EVENTS: Disabled	*Range: Disabled, Enabled*

The phase instantaneous overcurrent element may be used as an instantaneous element with no intentional delay or as a definite time element. The input current is the fundamental phasor magnitude.

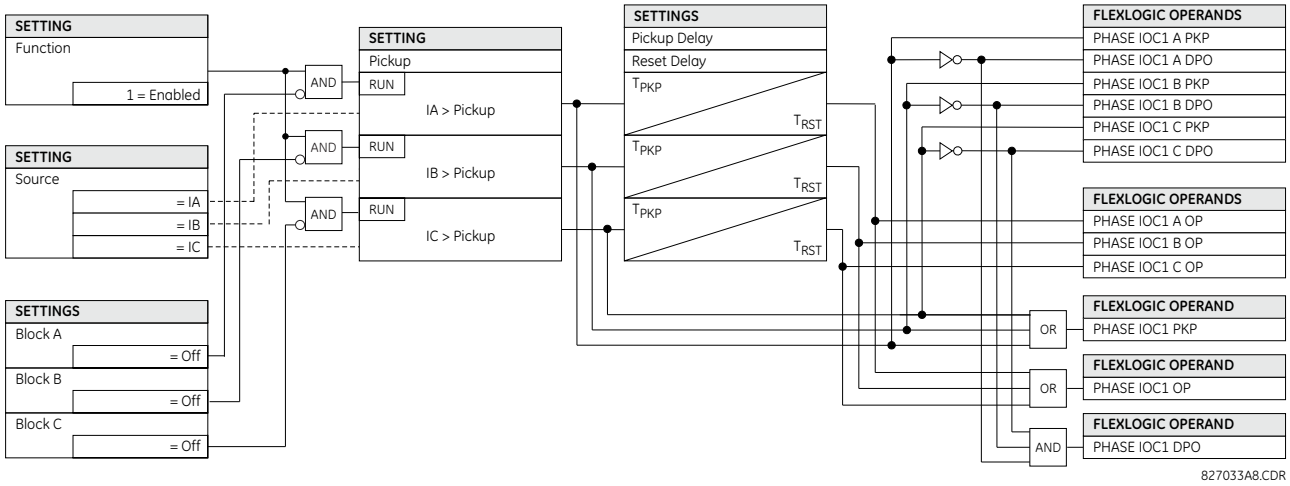

Figure 5–54: PHASE INSTANTANEOUS OVERCURRENT 1 SCHEME LOGIC

e) PHASE DIRECTIONAL OVERCURRENT (ANSI 67P, IEC PDOC/PTOC)

PATH: SETTINGS ⇨⇩ GROUPED ELEMENTS ⇨ SETTING GROUP 1(6) ⇨ PHASE CURRENT ⇨ PHASE DIRECTIONAL 1(2)

■ PHASE ■ DIRECTIONAL 1		PHASE DIR 1 FUNCTION: Disabled	*Range: Disabled, Enabled*
	MESSAGE	PHASE DIR 1 SIGNAL SOURCE: SRC 1	*Range: SRC 1, SRC 2, SRC 3, SRC 4, SRC 5, SRC 6*
	MESSAGE	PHASE DIR 1 BLOCK: Off	*Range: FlexLogic operand*
	MESSAGE	PHASE DIR 1 ECA: 30°	*Range: 0 to 359° in steps of 1*
	MESSAGE	PHASE DIR POL V1 THRESHOLD: 0.700 pu	*Range: 0.000 to 3.000 pu in steps of 0.001*
	MESSAGE	PHASE DIR 1 BLOCK WHEN V MEM EXP: No	*Range: No, Yes*
	MESSAGE	PHASE DIR 1 TARGET: Self-reset	*Range: Self-reset, Latched, Disabled*
	MESSAGE	PHASE DIR 1 EVENTS: Disabled	*Range: Disabled, Enabled*

NOTE

The TARGET setting is not user-selectable and forced to "Disabled". If Targets are required from directional elements, it can be achieved by assigning directional element output to a digital element, where targets selection can be used as required.

The phase directional elements (one for each of phases A, B, and C) determine the phase current flow direction for steady state and fault conditions and can be used to control the operation of the phase overcurrent elements via the **BLOCK** inputs of these elements.

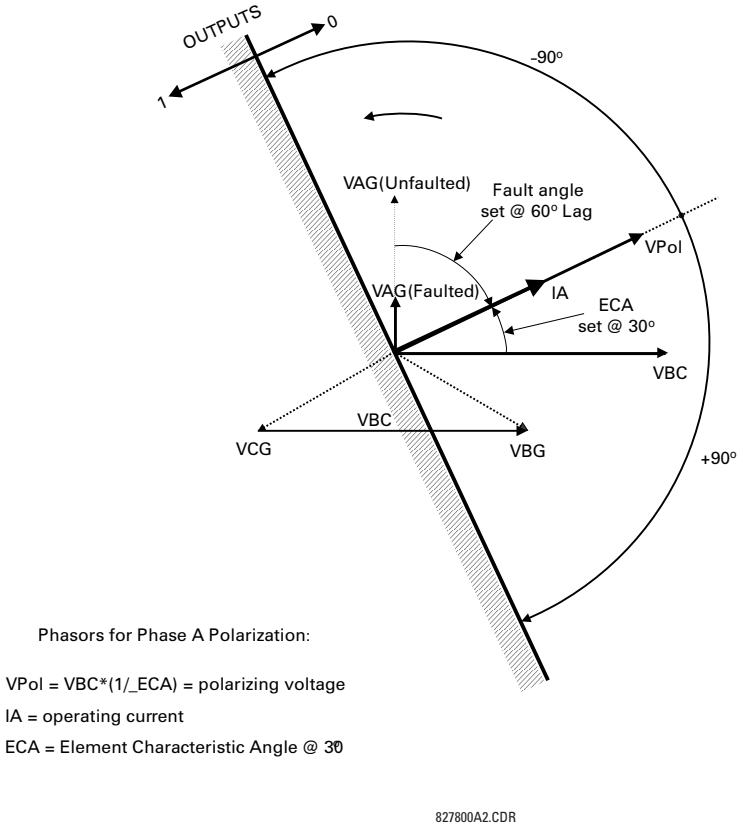

Figure 5–55: PHASE A DIRECTIONAL POLARIZATION

This element is intended to apply a block signal to an overcurrent element to prevent an operation when current is flowing in a particular direction. The direction of current flow is determined by measuring the phase angle between the current from the phase CTs and the line-line voltage from the VTs, based on the 90° or quadrature connection. If there is a requirement to supervise overcurrent elements for flows in opposite directions, such as can happen through a bus-tie breaker, two phase directional elements should be programmed with opposite element characteristic angle (ECA) settings.

To increase security for three phase faults very close to the VTs used to measure the polarizing voltage, a voltage memory feature is incorporated. This feature stores the polarizing voltage the moment before the voltage collapses, and uses it to determine direction. The voltage memory remains valid for one second after the voltage has collapsed.

The main component of the phase directional element is the phase angle comparator with two inputs: the operating signal (phase current) and the polarizing signal (the line voltage, shifted in the leading direction by the characteristic angle, ECA).

The following table shows the operating and polarizing signals used for phase directional control:

PHASE	OPERATING SIGNAL	POLARIZING SIGNAL V_{pol}	
		ABC PHASE SEQUENCE	ACB PHASE SEQUENCE
A	angle of IA	angle of VBC × (1∠ECA)	angle of VCB × (1∠ECA)
B	angle of IB	angle of VCA × (1∠ECA)	angle of VAC × 1∠ECA)
C	angle of IC	angle of VAB × (1∠ECA)	angle of VBA × (1∠ECA)

MODE OF OPERATION:

- When the function is “Disabled”, or the operating current is below 5% × CT nominal, the element output is “0”.
- When the function is “Enabled”, the operating current is above 5% × CT nominal, and the polarizing voltage is above the **PRODUCT SETUP** ⇨⇩ **DISPLAY PROPERTIES** ⇨⇩ **VOLTAGE CUT-OFF LEVEL** value, the element output is dependent on the phase angle between the operating and polarizing signals:
  - The element output is logic “0” when the operating current is within polarizing voltage ±90°.
  - For all other angles, the element output is logic “1”.
- Once the voltage memory has expired, the phase overcurrent elements under directional control can be set to block or trip on overcurrent as follows:
  - When **BLOCK WHEN V MEM EXP** is set to “Yes”, the directional element will block the operation of any phase overcurrent element under directional control when voltage memory expires.
  - When **BLOCK WHEN V MEM EXP** is set to “No”, the directional element allows tripping of phase overcurrent elements under directional control when voltage memory expires.

In all cases, directional blocking will be permitted to resume when the polarizing voltage becomes greater than the ‘polarizing voltage threshold’.

SETTINGS:

- **PHASE DIR 1 SIGNAL SOURCE:** This setting is used to select the source for the operating and polarizing signals. The operating current for the phase directional element is the phase current for the selected current source. The polarizing voltage is the line voltage from the phase VTs, based on the 90° or ‘quadrature’ connection and shifted in the leading direction by the element characteristic angle (ECA).
- **PHASE DIR 1 ECA:** This setting is used to select the element characteristic angle, i.e. the angle by which the polarizing voltage is shifted in the leading direction to achieve dependable operation. In the design of the UR-series elements, a block is applied to an element by asserting logic 1 at the blocking input. This element should be programmed via the ECA setting so that the output is **logic 1 for current in the non-tripping direction**.
- **PHASE DIR 1 POL V THRESHOLD:** This setting is used to establish the minimum level of voltage for which the phase angle measurement is healthy and reliable. Do not set this setting too low because the element can continue using the actual voltage already distorted by the fault instead of using healthy memory voltage—this can cause wrong directional discrimination.
- **PHASE DIR 1 BLOCK WHEN V MEM EXP:** This setting is used to select the required operation upon expiration of voltage memory. When set to "Yes", the directional element blocks the operation of any phase overcurrent element under directional control, when voltage memory expires; when set to "No", the directional element allows tripping of phase overcurrent elements under directional control.

NOTE

The phase directional element responds to the forward load current. In the case of a following reverse fault, the element needs some time – in the order of 8 ms – to establish a blocking signal. Some protection elements such as instantaneous overcurrent may respond to reverse faults before the blocking signal is established. Therefore, a coordination time of at least 10 ms must be added to all the instantaneous protection elements under the supervision of the phase directional element. If current reversal is of a concern, a longer delay – in the order of 20 ms – may be needed.

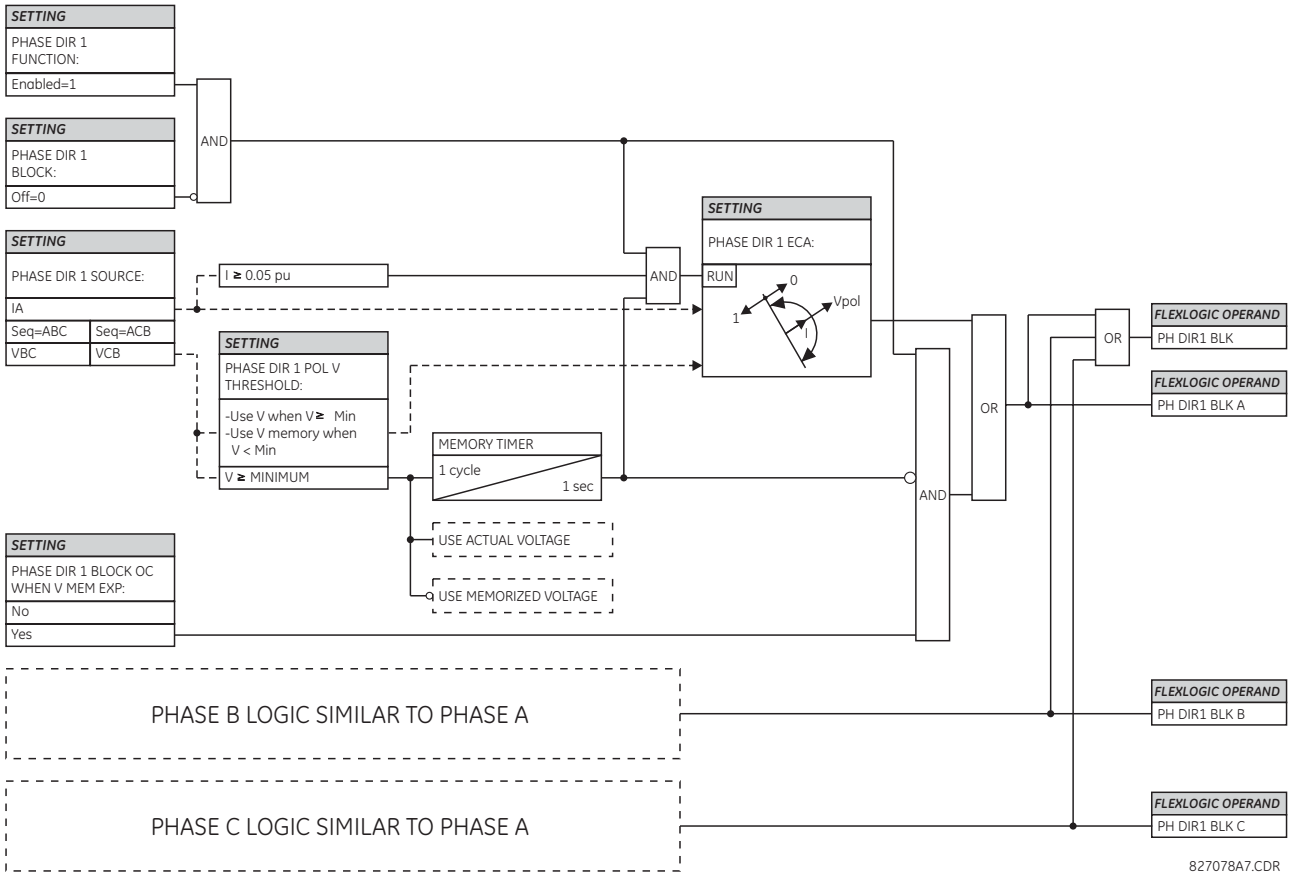

Figure 5–56: PHASE DIRECTIONAL SCHEME LOGIC

f) PHASE CURRENT UNBALANCE (ANSI 60P, IEC PVCB/PTOC)

PATH: SETTINGS ⇨⇩ GROUPED ELEMENTS ⇨ SETTING GROUP 1(6) ⇨⇩ PHASE CURRENT ⇨⇩ PHASE CURRENT UNBALANCE 1(3)

■ PHASE CURRENT ■ UNBALANCE 1	◀▶	CUR UNBALCE 1 FUNCTION: Disabled	Range: Disabled, Enabled
	MESSAGE ▲▼	CUR UNBALCE 1 DIF SOURCE: SRC 1	Range: SRC 1, SRC 2, SRC 3, SRC 4, SRC 5, SRC 6
	MESSAGE ▲▼	CUR UNBALCE 1 BANK SOURCE: SRC 1	Range: SRC 1, SRC 2, SRC 3, SRC 4, SRC 5, SRC 6
	MESSAGE ▲▼	CUR UNBALCE 1 INHNT FACTOR A: 0.0000	Range: –0.1000 to 0.1000 in steps of 0.0001
	MESSAGE ▲▼	CUR UNBALCE 1 INHNT FACTOR B: 0.0000	Range: –0.1000 to 0.1000 in steps of 0.0001
	MESSAGE ▲▼	CUR UNBALCE 1 INHNT FACTOR C: 0.0000	Range: –0.1000 to 0.1000 in steps of 0.0001
	MESSAGE ▲▼	CUR UNBALCE 1 STG 1A PICKUP: 0.020 pu	Range: 0.001 to 5.000 pu in steps of 0.001
	MESSAGE ▲▼	CUR UNBALCE 1 STG 2A PICKUP: 0.030 pu	Range: 0.001 to 5.000 pu in steps of 0.001
	MESSAGE ▲▼	CUR UNBALCE 1 STG 3A PICKUP: 0.040 pu	Range: 0.001 to 5.000 pu in steps of 0.001
	MESSAGE ▲▼	CUR UNBALCE 1 STG 4A PICKUP: 0.050 pu	Range: 0.001 to 5.000 pu in steps of 0.001
	MESSAGE ▲▼	CUR UNBALCE 1 STG 1B PICKUP: 0.020 pu	Range: 0.001 to 5.000 pu in steps of 0.001
	MESSAGE ▲▼	CUR UNBALCE 1 STG 2B PICKUP: 0.030 pu	Range: 0.001 to 5.000 pu in steps of 0.001
	MESSAGE ▲▼	CUR UNBALCE 1 STG 3B PICKUP: 0.040 pu	Range: 0.001 to 5.000 pu in steps of 0.001
	MESSAGE ▲▼	CUR UNBALCE 1 STG 4B PICKUP: 0.050 pu	Range: 0.001 to 5.000 pu in steps of 0.001
	MESSAGE ▲▼	CUR UNBALCE 1 STG 1C PICKUP: 0.020 pu	Range: 0.001 to 5.000 pu in steps of 0.001
	MESSAGE ▲▼	CUR UNBALCE 1 STG 2C PICKUP: 0.030 pu	Range: 0.001 to 5.000 pu in steps of 0.001
	MESSAGE ▲▼	CUR UNBALCE 1 STG 3C PICKUP: 0.040 pu	Range: 0.001 to 5.000 pu in steps of 0.001
	MESSAGE ▲▼	CUR UNBALCE 1 STG 4C PICKUP: 0.050 pu	Range: 0.001 to 5.000 pu in steps of 0.001
	MESSAGE ▲▼	CUR UNBALCE 1 STG 1 PKP DELAY: 30.00 s	Range: 0.00 to 600.00 s in steps of 0.01
	MESSAGE ▲▼	CUR UNBALCE 1 STG 2 PKP DELAY: 10.00 s	Range: 0.00 to 600.00 s in steps of 0.01
	MESSAGE ▲▼	CUR UNBALCE 1 STG 3 PKP DELAY: 1.00 s	Range: 0.00 to 600.00 s in steps of 0.01

MESSAGE
CUR UNBALCE 1 STG 4
PKP DELAY: 0.20 s
Range: 0.00 to 600.00 s in steps of 0.01

MESSAGE
CUR UNBALCE 1
DPO DELAY: 0.25 s
Range: 0.00 to 600.00 s in steps of 0.01

MESSAGE
CUR UNBL 1 BLK STG1:
Off
Range: FlexLogic operand

MESSAGE
CUR UNBL 1 BLK STG2:
Off
Range: FlexLogic operand

MESSAGE
CUR UNBL 1 BLK STG3:
Off
Range: FlexLogic operand

MESSAGE
CUR UNBL 1 BLK STG4:
Off
Range: FlexLogic operand

MESSAGE
CUR UNBALCE 1
TARGET: Self-reset
Range: Self-reset, Latched, Disabled

MESSAGE
CUR UNBALCE 1
EVENTS: Disabled
Range: Disabled, Enabled

Up to three identical phase current unbalance elements, one per each CT/VT module configured in hardware, are provided.

The element responds to a differential current signal measured via window-type CTs as a vectorial current difference between two parallel banks. With the two capacitors in the same phase identical, the said differential current is zero. Small differences between the capacitors of a given phase result in a small circulating current. Subtracting an adequate portion of the total bank current in a given phase compensates for this inherent unbalance current.

The relay allows manual setting of the inherent unbalance factors, or automatically via the **COMMANDS** menu. For more information, refer to the Theory of Operation and Application of Settings chapters.

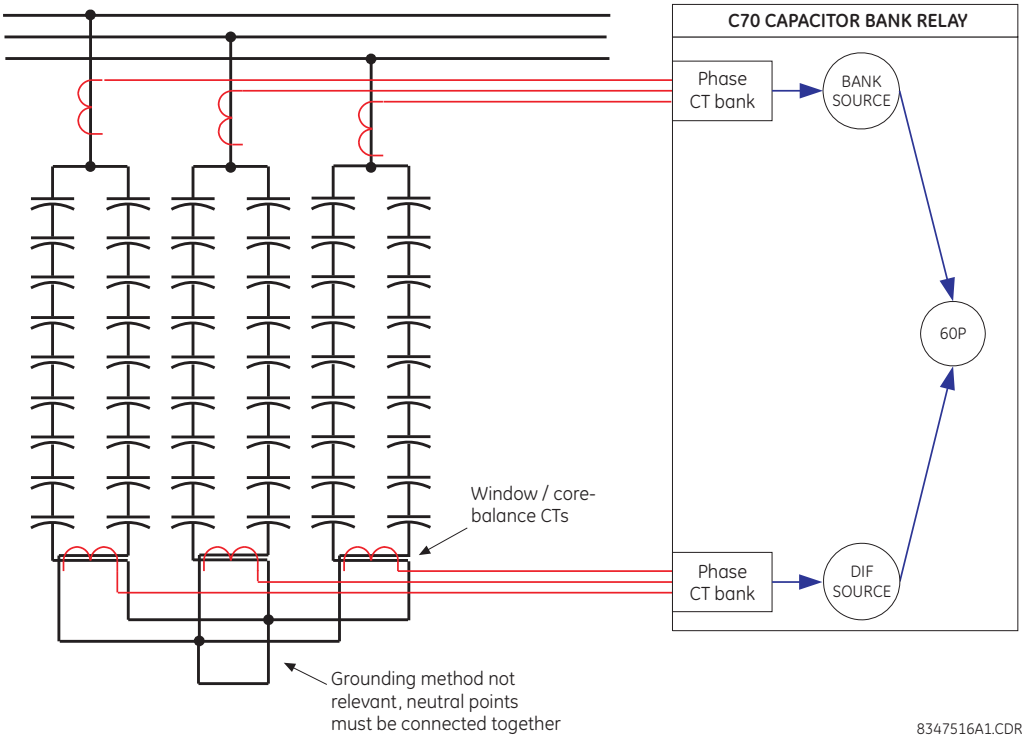

Figure 5–57: PHASE CURRENT UNBALANCE BASIC CONNECTIONS

The following settings are available for all three elements.

- **CUR UNBALCE 1 DIF SOURCE** — Indicate signal source that signifies the differential currents between the two parallel banks. In order to improve accuracy, a relatively low-ratio window CT can be used for instrumentation. CT primary and secondary ratings are entered under a separate menu. Directionality of wiring these current signals is not important for proper functioning of the feature as long as the sign of the factor compensating for the inherent unbalance is appropriate. For ease of analysis and consistency of relay records, wire all three currents with the same polarity.
- **CUR UNBALCE 1 BANK SOURCE** — Indicate signal source that signifies the total current of the two parallel banks. Either the main CTs are placed in a way ensuring measurement of the total current, or the currents of individual banks are summed externally to the relay by paralleling the main CTs, or summed up internally to the relay using the configuration mechanism of sources. The total bank current is used for compensation for the inherent bank unbalance. CT primary and secondary ratings are entered under a separate menu. Directionality of wiring these current signals is not important for proper functioning of the feature as long as the sign of the factor compensating for the inherent unbalance is appropriate. For ease of analysis and consistency of relay records, wire all three currents with the same polarity. If any of the compensating factors is non-zero, the BANK SOURCE must have phase CT current configured for this function to run.
- **CUR UNBALCE 1 INHNT FACTOR A(B,C)** — This setting specifies the compensating factor for the inherent unbalance between the two banks. Normally, the compensating factors are small numbers being a ratio of the difference between the two impedances, and the sum of the two impedances. For example, with 1% difference between the impedances, the factor is (1-0.99)/(1+0.99) = 0.005. The sign of the compensating factor depends on the polarity of wiring the differential signals, and on which of the two banks has the lower impedance. Quality of balancing the bank with a given value of this setting can be viewed under the **ACTUAL VALUES** menu. An auto-setting procedure is available under the **COMMANDS** menu to calculate the compensating factors automatically. Setting the compensating factors to zero effectively disables the compensation and turns this feature into a plain overcurrent element responding to the differential (split phase) currents.
- **CUR UNBALCE 1 STG 1A PICKUP** to **CUR UNBALCE 1 STG 4C PICKUP**: These settings specify pickup thresholds for stages 1 through 4 in phases A through C in per-units (pu) of the nominal current of the differential source. A value of 1 pu is the nominal secondary current, or the nominal primary current, respectively, as configured under the differential source of this function.
- **CUR UNBALCE 1 STG 1 PKP DELAY** to **CUR UNBALCE 1 STG 4 PKP DELAY**: This setting specifies the pickup time delay, individually per each stage of alarming/tripping. Note that each of the twelve comparators (four stages in three phases) uses an individual timer, but settings for these timers are controlled individually per each stage, not per phase. The timers use a common drop out time delay specified by the next setting.
- **CUR UNBALCE 1 DPO DELAY**: This setting controls a drop out delay for the operate FlexLogic operands. Note that individual stages apply individually configurable pickup delays, but use this common drop out delay.
- **CUR UNBL 1 BLK STG1** to **CUR UNBL 1 BLK STG4**: These settings are used to block the function on a per-stage basis when required. At minimum this function shall be blocked when the two banks are not paralleled. Note that when unblocked, the function becomes operational after five cycles of intentional delay. High-set instantaneous protection on energization can be provided by a separate instantaneous overcurrent function.

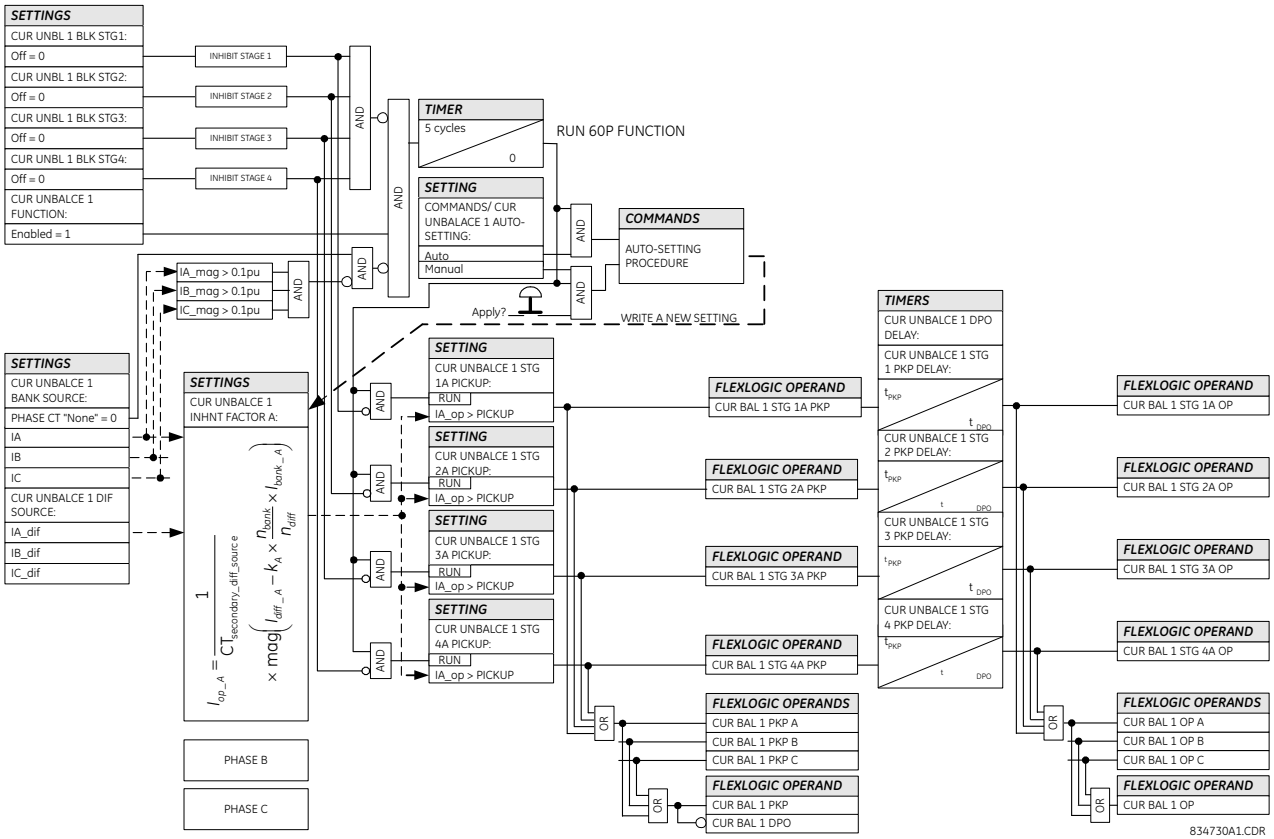

Figure 5–58: PHASE CURRENT UNBALANCE SCHEME LOGIC

5.6.4 NEUTRAL CURRENT

a) MAIN MENU

PATH: SETTINGS ⇨⇩ GROUPED ELEMENTS ⇨ SETTING GROUP 1(6) ⇨⇩ NEUTRAL CURRENT

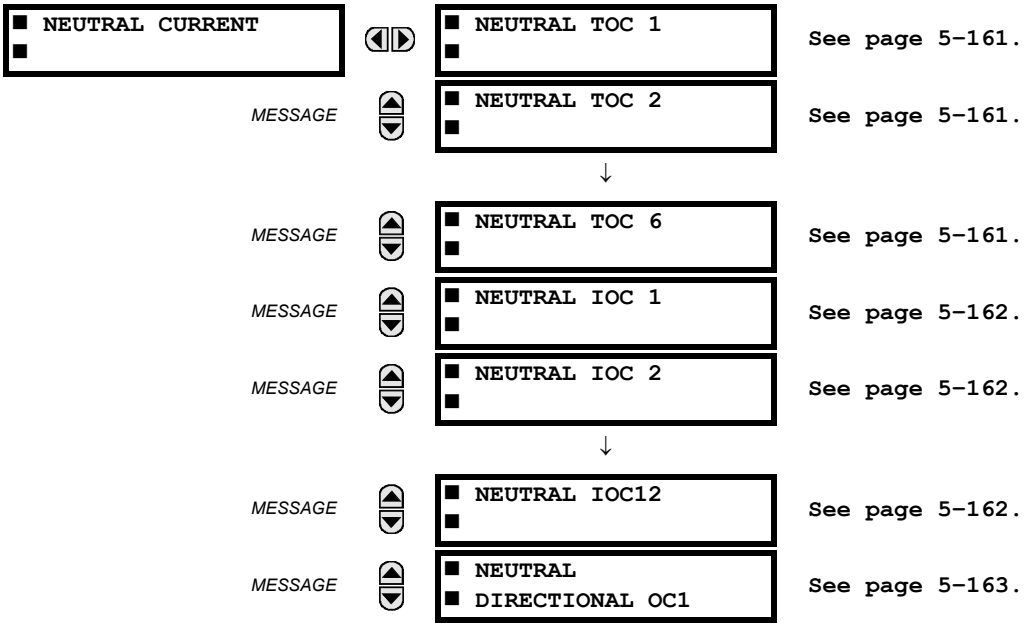

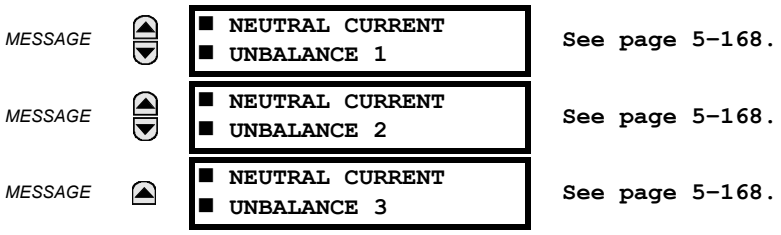

The C70 contains protection elements for neutral time overcurrent (ANSI device 51G), neutral instantaneous overcurrent (ANSI device 50G), and neutral current unbalance (ANSI device 60N). A maximum of six ground time overcurrent and twelve ground instantaneous overcurrent elements are available, dependent on the CT/VT modules ordered with the relay. Three neutral current unbalance elements are available.

b) NEUTRAL TIME OVERCURRENT (ANSI 51N, IEC PTOC)

PATH: SETTINGS ⇨⇩ GROUPED ELEMENTS ⇨ SETTING GROUP 1(6) ⇨⇩ NEUTRAL CURRENT ⇨ NEUTRAL TOC1(6)

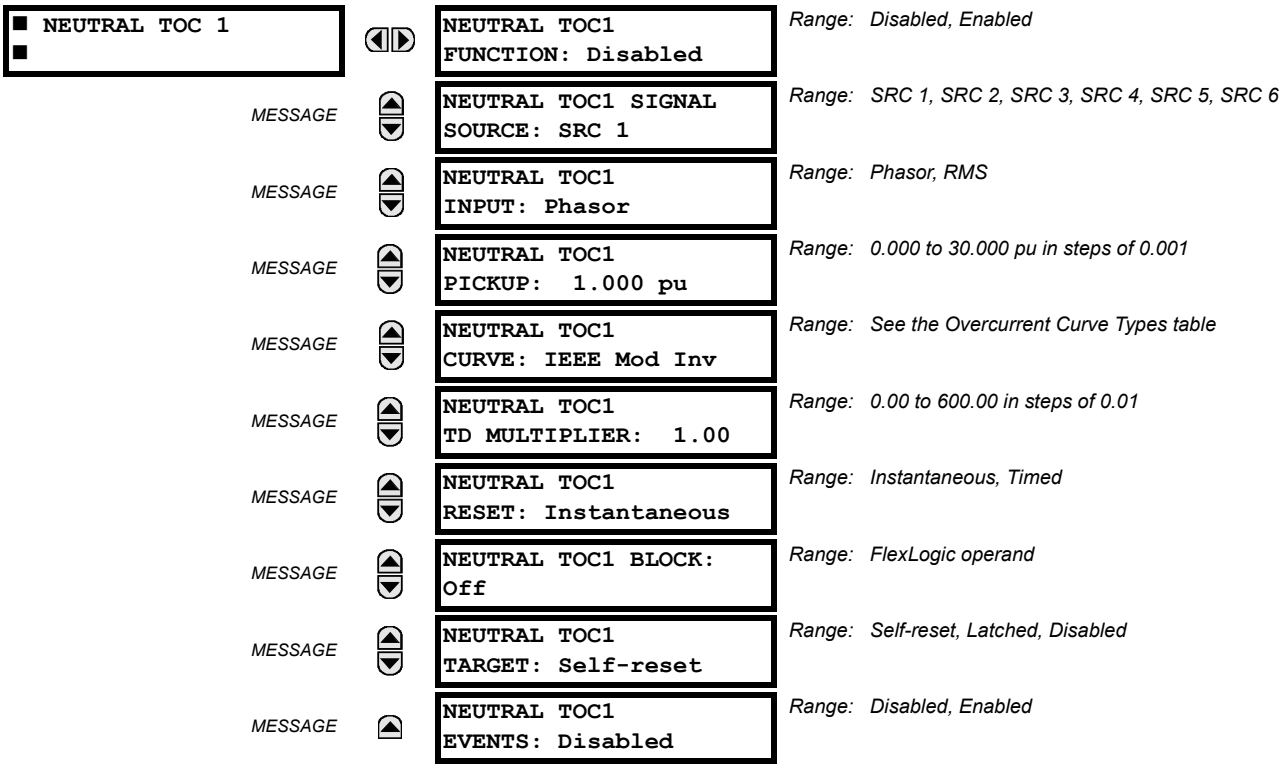

The neutral time overcurrent element can provide a desired time-delay operating characteristic versus the applied current or be used as a simple definite time element. The neutral current input value is a quantity calculated as 3I0 from the phase currents and may be programmed as fundamental phasor magnitude or total waveform RMS magnitude as required by the application.

Two methods of resetting operation are available: “Timed” and “Instantaneous” (see the Inverse TOC Curve Characteristics section for details on curve setup, trip times and reset operation). When the element is blocked, the time accumulator will reset according to the reset characteristic. For example, if the element reset characteristic is set to “Instantaneous” and the element is blocked, the time accumulator will be cleared immediately.

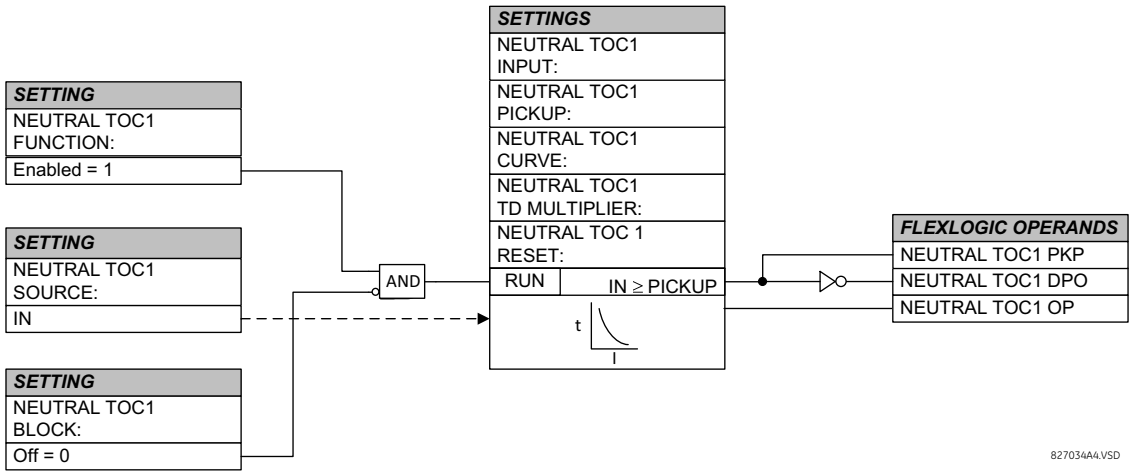

Figure 5–59: NEUTRAL TIME OVERCURRENT 1 SCHEME LOGIC

c) NEUTRAL INSTANTANEOUS OVERCURRENT (ANSI 50N, IEC PIOC)

PATH: SETTINGS ⇨⇩ GROUPED ELEMENTS ⇨ SETTING GROUP 1(6) ⇨⇩ NEUTRAL CURRENT ⇨⇩ NEUTRAL IOC1(12)

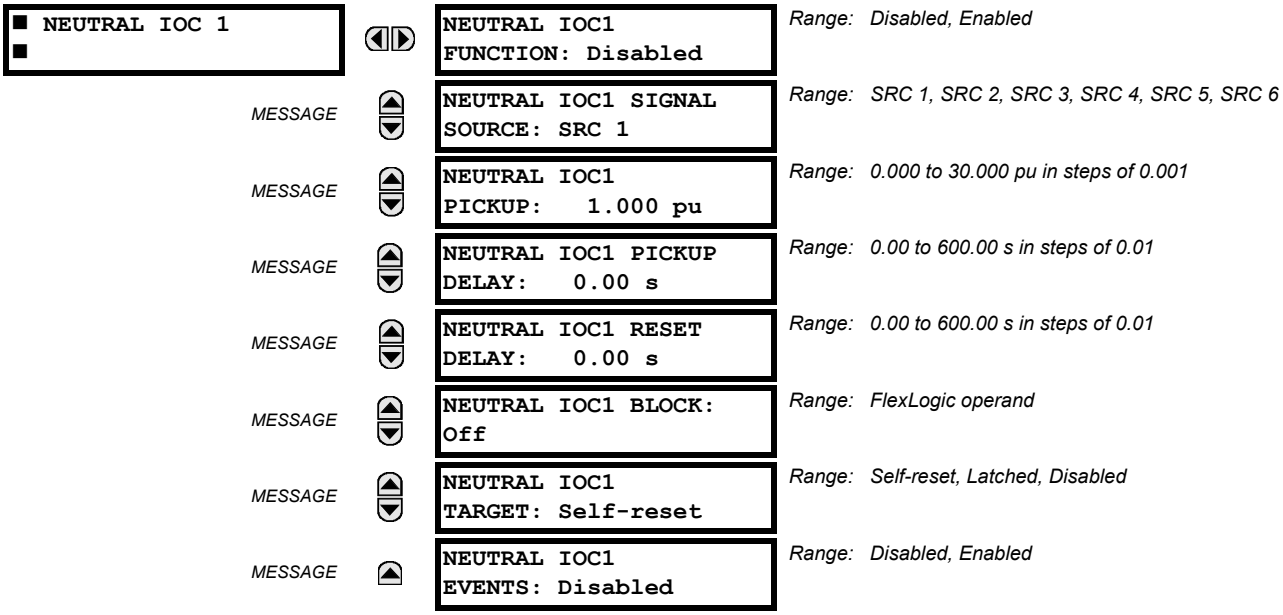

The neutral instantaneous overcurrent element may be used as an instantaneous function with no intentional delay or as a definite time function. The element essentially responds to the magnitude of a neutral current fundamental frequency phasor calculated from the phase currents. A positive-sequence restraint is applied for better performance. A small portion (6.25%) of the positive-sequence current magnitude is subtracted from the zero-sequence current magnitude when forming the operating quantity of the element as follows:

$$I_{op} = 3 \times (|I\_0| - Kx|I\_1|) \quad \text{where } K = 1/16 \qquad \textbf{(EQ 5.16)}$$

The positive-sequence restraint allows for more sensitive settings by counterbalancing spurious zero-sequence currents resulting from

- System unbalances under heavy load conditions
- Transformation errors of current transformers (CTs) during double-line and three-phase faults

- Switch-off transients during double-line and three-phase faults

The positive-sequence restraint must be considered when testing for pickup accuracy and response time (multiple of pickup). The operating quantity depends on how test currents are injected into the relay, where single-phase injection is $I_{op} = 0.9375 \times I_{injected}$ and three-phase pure zero-sequence injection is $I_{op} = 3 \times I_{injected}$

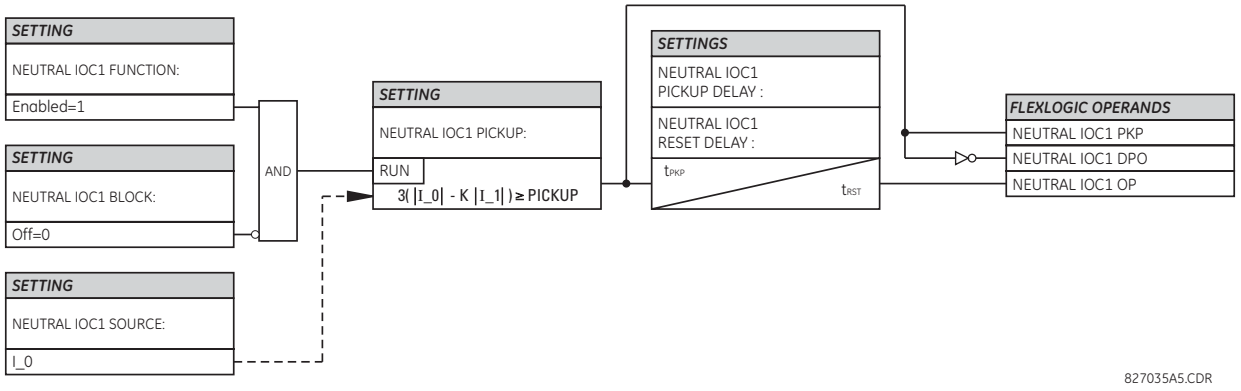

Figure 5–60: NEUTRAL IOC1 SCHEME LOGIC

d) NEUTRAL DIRECTIONAL OVERCURRENT (ANSI 67N, IEC PDEF/PTOC)

PATH: SETTINGS ⇨⇩ GROUPED ELEMENTS ⇨ SETTING GROUP 1(6) ⇨⇩ NEUTRAL CURRENT ⇨⇩ NEUTRAL DIRECTIONAL OC1

■ NEUTRAL ■ DIRECTIONAL OC1		NEUTRAL DIR OC1 FUNCTION: Disabled	*Range: Disabled, Enabled*
	MESSAGE	NEUTRAL DIR OC 1 SOURCE: SRC 1	*Range: SRC 1, SRC 2, SRC 3, SRC 4, SRC 5, SRC 6*
	MESSAGE	NEUTRAL DIR OC1 POLARIZING: Voltage	*Range: Voltage, Current, Dual, Dual-V, Dual-I*
	MESSAGE	NEUTRAL DIR OC1 POL VOLT: Calculated V0	*Range: Calculated V0, Aux. Voltage (VX)*
	MESSAGE	NEUTRAL DIR OC1 OP CURR: Calculated 3I0	*Range: Calculated 3I0, Measured IG*
	MESSAGE	NEUTRAL DIR OC1 POS- SEQ RESTRAINT: 0.063	*Range: 0.000 to 0.500 in steps of 0.001*
	MESSAGE	NEUTRAL DIR OC1 OFFSET: 0.00 Ω	*Range: 0.00 to 250.00 Ω in steps of 0.01*
	MESSAGE	NEUTRAL DIR OC1 FWD ECA: 75° Lag	*Range: –90 to 90° in steps of 1*
	MESSAGE	NEUTRAL DIR OC1 FWD LIMIT ANGLE: 90°	*Range: 40 to 90° in steps of 1*
	MESSAGE	NEUTRAL DIR OC1 FWD PICKUP: 0.050 pu	*Range: 0.006 to 30.000 pu in steps of 0.001*
	MESSAGE	NEUTRAL DIR OC1 REV LIMIT ANGLE: 90°	*Range: 40 to 90° in steps of 1*
	MESSAGE	NEUTRAL DIR OC1 REV PICKUP: 0.050 pu	*Range: 0.006 to 30.000 pu in steps of 0.001*
	MESSAGE	NEUTRAL DIR OC1 BLK: Off	*Range: FlexLogic operand*

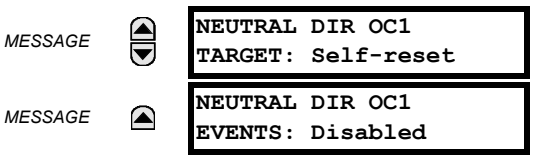

The neutral directional overcurrent element provides both forward and reverse fault direction indications the NEUTRAL DIR OC1 FWD and NEUTRAL DIR OC1 REV operands, respectively. The output operand is asserted if the magnitude of the operating current is above a pickup level (overcurrent unit) and the fault direction is seen as *forward* or *reverse*, respectively (directional unit).

The **overcurrent unit** responds to the magnitude of a fundamental frequency phasor of the either the neutral current calculated from the phase currents or the ground current. There are separate pickup settings for the forward-looking and reverse-looking functions. If set to use the calculated 3I_0, the element applies a *positive-sequence restraint* for better performance: a small user-programmable portion of the positive-sequence current magnitude is subtracted from the zero-sequence current magnitude when forming the operating quantity.

$$I_{op} = 3 \times (|I\_0| - K \times |I\_1|) \quad \textbf{(EQ 5.17)}$$

The positive-sequence restraint allows for more sensitive settings by counterbalancing spurious zero-sequence currents resulting from:

- System unbalances under heavy load conditions.
- Transformation errors of current transformers (CTs) during double-line and three-phase faults.
- Switch-off transients during double-line and three-phase faults.

5

The positive-sequence restraint must be considered when testing for pickup accuracy and response time (multiple of pickup). The operating quantity depends on the way the test currents are injected into the relay (single-phase injection: $I_{op} = (1 - K) \times I_{injected}$; three-phase pure zero-sequence injection: $I_{op} = 3 \times I_{injected}$).

The positive-sequence restraint is removed for low currents. If the positive-sequence current is below 0.8 pu, the restraint is removed by changing the constant *K* to zero. This facilitates better response to high-resistance faults when the unbalance is very small and there is no danger of excessive CT errors as the current is low.

The **directional unit** uses the zero-sequence current (I_0) or ground current (IG) for fault direction discrimination and may be programmed to use either zero-sequence voltage ("Calculated V0" or "Measured VX"), ground current (IG), or both for polarizing. The zero-sequence current (I_0) must be greater than the **PRODUCT SETUP ⇨⇩ DISPLAY PROPERTIES ⇨⇩ CURRENT CUT-OFF LEVEL** setting value and IG must be greater than 0.05 pu to be validated as the operating quantity for directional current. The following tables define the neutral directional overcurrent element.

Table 5–27: QUANTITIES FOR "CALCULATED 3I0" CONFIGURATION

DIRECTIONAL UNIT				OVERCURRENT UNIT
POLARIZING MODE	DIRECTION	COMPARED PHASORS		
Voltage	Forward	–V_0 + Z_offset × I_0	I_0 × 1∠ECA	$I_{op} = 3 \times (\|I\_0\| - K \times \|I\_1\|)$ if $\|I_1\| > 0.8$ pu $I_{op} = 3 \times (\|I\_0\|)$ if $\|I_1\| \le 0.8$ pu
	Reverse	–V_0 + Z_offset × I_0	–I_0 × 1∠ECA	
Current	Forward	IG	I_0	
	Reverse	IG	–I_0	
Dual, Dual-V, Dual-I	Forward	–V_0 + Z_offset × I_0	I_0 × 1∠ECA	
		or		
		IG	I_0	
	Reverse	–V_0 + Z_offset × I_0	–I_0 × 1∠ECA	
		or		
		IG	–I_0	

Table 5–28: QUANTITIES FOR "MEASURED IG" CONFIGURATION

DIRECTIONAL UNIT				OVERCURRENT UNIT
POLARIZING MODE	DIRECTION	COMPARED PHASORS		
Voltage	Forward	–V_0 + Z_offset × IG/3	IG × 1∠ECA	I_{op} = |IG|
	Reverse	–V_0 + Z_offset × IG/3	–IG × 1∠ECA	

where: $V\_0 = \frac{1}{3}(VAG + VBG + VCG) =$ zero sequence voltage ,

$I\_0 = \frac{1}{3}IN = \frac{1}{3}(IA + IB + IC) =$ zero sequence current ,

ECA = element characteristic angle
IG = ground current
Z_offset is the offset impedance, for which magnitude is the OFFSET setting and angle is the FWD ECA

When **NEUTRAL DIR OC1 POL VOLT** is set to “Measured VX”, one-third of this voltage is used in place of V_0. The following figure explains the usage of the voltage polarized directional unit of the element.

The figure below shows the voltage-polarized phase angle comparator characteristics for a phase A to ground fault, with:

- ECA = 90° (element characteristic angle = centerline of operating characteristic)
- FWD LA = 80° (forward limit angle = the ± angular limit with the ECA for operation)
- REV LA = 80° (reverse limit angle = the ± angular limit with the ECA for operation)

The above bias should be taken into account when using the neutral directional overcurrent element to directionalize other protection elements.

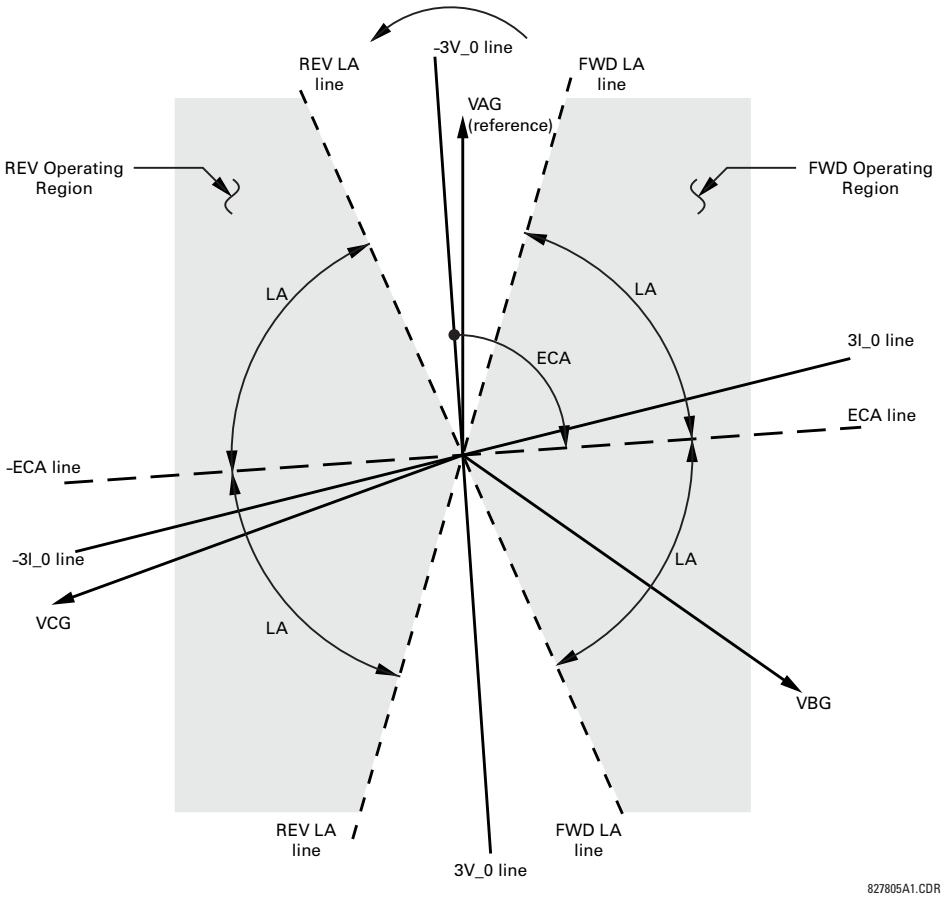

Figure 5–61: NEUTRAL DIRECTIONAL VOLTAGE-POLARIZED CHARACTERISTICS

- **NEUTRAL DIR OC1 POLARIZING:** This setting selects the polarizing mode for the directional unit.
  - If "Voltage" polarizing is selected, the element uses the zero-sequence voltage angle for polarization. The user can use either the zero-sequence voltage V_0 calculated from the phase voltages, or the zero-sequence voltage supplied externally as the auxiliary voltage V_X, both from the **NEUTRAL DIR OC1 SOURCE**.

    The calculated V_0 can be used as polarizing voltage only if the voltage transformers are connected in Wye. The auxiliary voltage can be used as the polarizing voltage provided **SYSTEM SETUP ⇨ AC INPUTS ⇨⇩ VOLTAGE BANK ⇨⇩ AUXILIARY VT CONNECTION** is set to "Vn" and the auxiliary voltage is connected to a zero-sequence voltage source (such as broken delta connected secondary of VTs).

    The zero sequence voltage V_0 must be greater than **PRODUCT SETUP ⇨⇩ DISPLAY PROPERTIES ⇨⇩ VOLTAGE CUT-OFF LEVEL** to be validated for use as polarizing signal. Additionally, when offset impedance is applied and zero-sequence current is above 0.2 pu, compensated zero-sequence voltage -V_0 + Z_offset x I_0 has to be above 0.02 pu in order to discriminate fault direction; otherwise when zero-sequence current is less than 0.2 pu, -V_0 is then used as the polarizing signal. If the polarizing signal is invalid, neither forward nor reverse indication is given.
  - If "Current" polarizing is selected, the element uses the ground current angle connected externally and configured under **NEUTRAL OC1 SOURCE** for polarization. The ground CT must be connected between the ground and neutral point of an adequate local source of ground current. The ground current must be greater than 0.05 pu to be validated as a polarizing signal. If the polarizing signal is not valid, neither forward nor reverse indication is given. In addition, the zero-sequence current (I_0) must be greater than the **PRODUCT SETUP ⇨⇩ DISPLAY PROPERTIES ⇨⇩ CURRENT CUT-OFF LEVEL** setting value.

For a choice of current polarizing, it is recommended that the polarizing signal be analyzed to ensure that a known direction is maintained irrespective of the fault location. For example, if using an autotransformer neutral current as a polarizing source, it should be ensured that a reversal of the ground current does not occur for a high-side fault. The low-side system impedance should be assumed minimal when checking for this condition. A similar situation arises for a wye/delta/wye transformer, where current in one transformer winding neutral may reverse when faults on both sides of the transformer are considered.

– If “Dual” polarizing is selected, the element performs both directional comparisons as described. A given direction is confirmed if either voltage or current comparators indicate so. If a conflicting (simultaneous forward and reverse) indication occurs, the forward direction overrides the reverse direction.

– If "Dual-V" polarizing is selected, "Voltage" polarizing is performed and "Current" polarizing is ignored if the voltage polarizing signal is valid; otherwise "Current" polarizing is performed if the current polarizing signal is valid. If neither of them is valid, neither forward nor reverse indication is given.

– If "Dual-I" polarizing is selected, "Current" polarizing is performed and "Voltage" polarizing is ignored if the current polarizing signal is valid; otherwise "Voltage" polarizing is performed if the voltage polarizing signal is valid. If neither of them is valid, neither forward nor reverse indication is given.

- **NEUTRAL DIR OC1 POL VOLT:** Selects the polarizing voltage used by the directional unit when "Voltage," "Dual," "Dual-V," or "Dual-I" polarizing mode is set. The polarizing voltage can be programmed to be either the zero-sequence voltage calculated from the phase voltages ("Calculated V0") or supplied externally as an auxiliary voltage ("Measured VX").
- **NEUTRAL DIR OC1 OP CURR:** This setting indicates whether the 3I_0 current calculated from the phase currents, or the ground current shall be used by this protection. This setting acts as a switch between the neutral and ground modes of operation (67N and 67G). If set to “Calculated 3I0” the element uses the phase currents and applies the positive-sequence restraint; if set to “Measured IG” the element uses ground current supplied to the ground CT of the CT bank configured as **NEUTRAL DIR OC1 SOURCE**. If this setting is “Measured IG”, then the **NEUTRAL DIR OC1 POLARIZING** setting must be “Voltage”, as it is not possible to use the ground current as an operating and polarizing signal simultaneously. IG current has to be above 0.05 pu to be used as operate quantity.
- **NEUTRAL DIR OC1 POS-SEQ RESTRAINT**: This setting controls the amount of the positive-sequence restraint. Set to 0.063 for backward compatibility with firmware revision 3.40 and older. Set to zero to remove the restraint. Set higher if large system unbalances or poor CT performance are expected.
- **NEUTRAL DIR OC1 OFFSET:** This setting specifies the offset impedance used by this protection. The primary application for the offset impedance is to guarantee correct identification of fault direction on series compensated lines. In regular applications, the offset impedance ensures proper operation even if the zero-sequence voltage at the relaying point is very small. If this is the intent, the offset impedance shall not be larger than the zero-sequence impedance of the protected circuit. Practically, it shall be several times smaller. The offset impedance shall be entered in secondary ohms.
- **NEUTRAL DIR OC1 FWD ECA:** This setting defines the characteristic angle (ECA) for the forward direction in the "Voltage" polarizing mode. The "Current" polarizing mode uses a fixed ECA of 0°. The ECA in the reverse direction is the angle set for the forward direction shifted by 180°.
- **NEUTRAL DIR OC1 FWD LIMIT ANGLE:** This setting defines a symmetrical (in both directions from the ECA) limit angle for the forward direction.
- **NEUTRAL DIR OC1 FWD PICKUP:** This setting defines the pickup level for the overcurrent unit of the element in the forward direction. When selecting this setting it must be kept in mind that the design uses a ‘positive-sequence restraint’ technique for the “Calculated 3I0” mode of operation.
- **NEUTRAL DIR OC1 REV LIMIT ANGLE:** This setting defines a symmetrical (in both directions from the ECA) limit angle for the reverse direction.
- **NEUTRAL DIR OC1 REV PICKUP:** This setting defines the pickup level for the overcurrent unit of the element in the reverse direction. When selecting this setting it must be kept in mind that the design uses a *positive-sequence restraint* technique for the “Calculated 3I0” mode of operation.

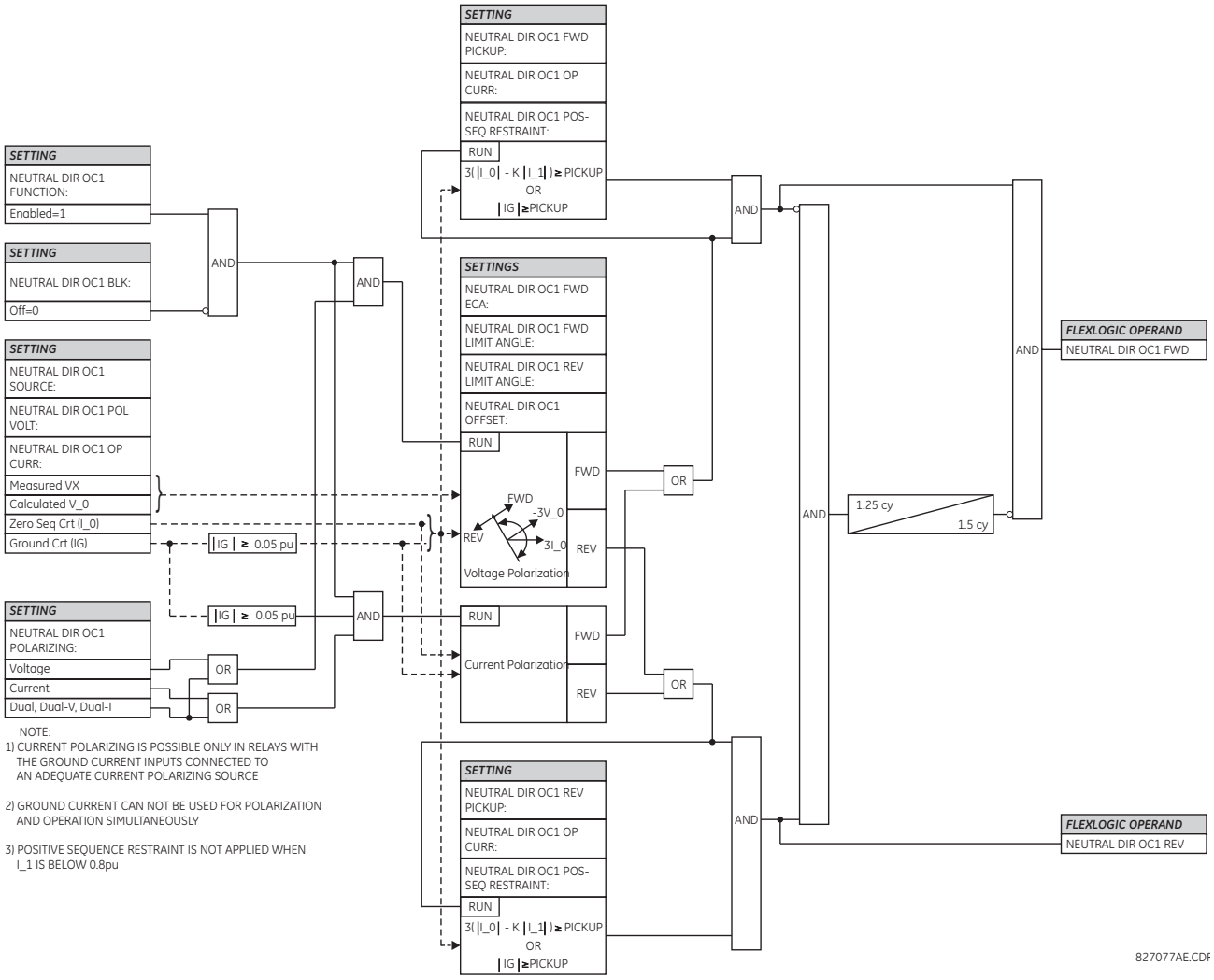

NOTE:
1) CURRENT POLARIZING IS POSSIBLE ONLY IN RELAYS WITH THE GROUND CURRENT INPUTS CONNECTED TO AN ADEQUATE CURRENT POLARIZING SOURCE

2) GROUND CURRENT CAN NOT BE USED FOR POLARIZATION AND OPERATION SIMULTANEOUSLY

3) POSITIVE SEQUENCE RESTRAINT IS NOT APPLIED WHEN I_1 IS BELOW 0.8pu

Figure 5–62: NEUTRAL DIRECTIONAL OVERCURRENT LOGIC

e) NEUTRAL CURRENT UNBALANCE (ANSI 60N, IEC PVCB/PTOC)

PATH: SETTINGS ⇨⇩ GROUPED... ⇨ SETTING GROUP 1(6) ⇨⇩ NEUTRAL CURRENT ⇨⇩ NEUTRAL CURRENT UNBALANCE 1(3)

```
■ NEUTRAL CURRENT
■ UNBALANCE 1
```

```
NTRL CUR UNBALCE 1
FUNCTION: Disabled
```

Range: Disabled, Enabled

MESSAGE

```
NTRL CUR UNBALCE 1
BANK SOURCE: SRC 1
```

Range: SRC 1, SRC 2, SRC 3, SRC 4, SRC 5, SRC 6

MESSAGE

```
NTRL CUR UNBALCE 1
K MAG: 0.0000
```

Range: 0.0000 to 0.1500 in steps of 0.0001

MESSAGE

```
NTRL CUR UNBALCE 1
K ANG: 0°
```

Range: 0 to 359° in steps of 1

MESSAGE

```
NTRL CUR UNBALCE 1
STG1 PKP: 0.020 pu
```

Range: 0.001 to 5.000 pu in steps of 0.001

MESSAGE

```
NTRL CUR UNBALCE 1
STG1 SLOPE: 2.0%
```

Range: 0.0 to 10.% in steps of 0.1

MESSAGE
NTRL CUR UNBALCE 1
STG2 PKP: 0.030 pu
Range: 0.001 to 5.000 pu in steps of 0.001

MESSAGE
NTRL CUR UNBALCE 1
STG2 SLOPE: 2.0%
Range: 0.0 to 10.% in steps of 0.1

MESSAGE
NTRL CUR UNBALCE 1
STG3 PKP: 0.040 pu
Range: 0.001 to 5.000 pu in steps of 0.001

MESSAGE
NTRL CUR UNBALCE 1
STG3 SLOPE: 2.0%
Range: 0.0 to 10.% in steps of 0.1

MESSAGE
NTRL CUR UNBALCE 1
STG4 PKP: 0.050 pu
Range: 0.001 to 5.000 pu in steps of 0.001

MESSAGE
NTRL CUR UNBALCE 1
STG4 SLOPE: 5.0%
Range: 0.0 to 10.% in steps of 0.1

MESSAGE
NTRL CUR UNBALCE 1
STG1 DEL: 30.00 s
Range: 0.00 to 600.00 s in steps of 0.01

MESSAGE
NTRL CUR UNBALCE 1
STG2 DEL: 10.00 s
Range: 0.00 to 600.00 s in steps of 0.01

MESSAGE
NTRL CUR UNBALCE 1
STG3 DEL: 1.00 s
Range: 0.00 to 600.00 s in steps of 0.01

MESSAGE
NTRL CUR UNBALCE 1
STG4 DEL: 0.20 s
Range: 0.00 to 600.00 s in steps of 0.01

MESSAGE
NTRL CUR UNBALCE 1
DPO DELAY: 0.25 s
Range: 0.00 to 600.00 s in steps of 0.01

MESSAGE
NTRL CUR 1 BLK STG1:
Off
Range: FlexLogic operand

MESSAGE
NTRL CUR 1 BLK STG2:
Off
Range: FlexLogic operand

MESSAGE
NTRL CUR 1 BLK STG3:
Off
Range: FlexLogic operand

MESSAGE
NTRL CUR 1 BLK STG4:
Off
Range: FlexLogic operand

MESSAGE
NTRL CUR UNBALCE 1
TARGET: Self-reset
Range: Self-reset, Latched, Disabled

MESSAGE
NTRL CUR UNBALCE 1
EVENTS: Disabled
Range: Disabled, Enabled

Up to three identical neutral current unbalance elements, one per each installed CT/VT module.

The neutral current unbalance element responds to a differential current signal measured as a vectorial current difference between neutral currents of parallel banks. In case of ungrounded banks, regular, preferably low-ratio CT can be used. In case of grounded banks, a window or core-balance CT shall be used for increased accuracy/sensitivity.

The function applies simplified compensation for the inherent bank unbalance. Accurate compensation requires three balancing factors that are difficult to measure in practical situations. Instead, a simple and practical compensation responding to both the positive-sequence current and negative-sequence current is applied. This method is easy to apply and remains accurate as long as the zero-sequence bank currents are relatively small. Under large zero-sequence bank currents, the applied method of compensation for the inherent bank unbalance is less accurate. The solution to this problem is to use a small portion of the zero-sequence current at the bank terminals to produce extra restraint and preserve high sensitivity of this protection method.

By setting both the slope and the inherent unbalance compensating factor to zero one could apply the function as a plain overcurrent element responding to the split-phase neutral current.

The relay allows manual setting of the inherent unbalance factor or automatic setting via a dedicated command. For additional information, refer to the Theory of Operation and Application of Settings chapters.

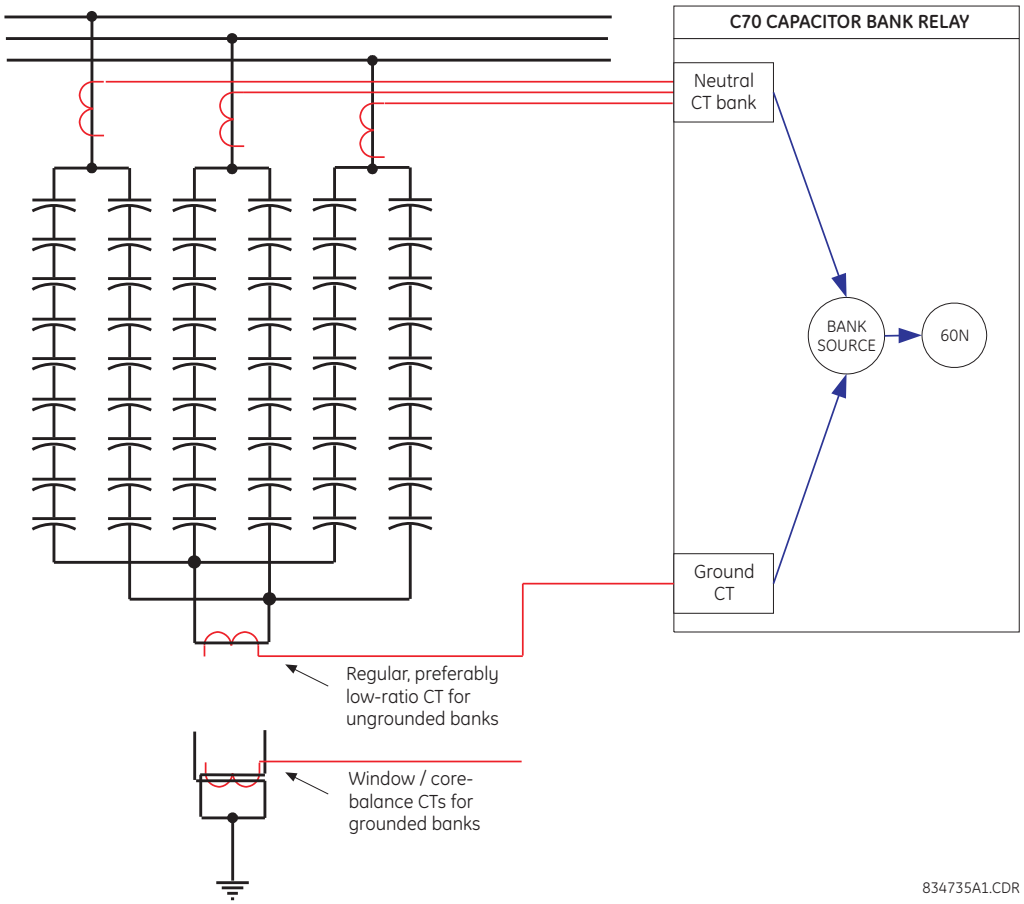

Figure 5–63: NEUTRAL CURRENT UNBALANCE CONNECTIONS

The following settings are available. The settings shown below are for the neutral current unbalance 1 element. The same descriptions apply to the neutral current unbalance 2 and 3 elements.

- **NTRL CUR UNBALCE 1 BANK SOURCE**: This setting indicates the signal source that signifies the split-phase neutral current in its ground current channel. At minimum the ground channel of this source must be set. If the factor compensating for inherent bank unbalance is set above zero signalling the intent of using the compensation, the phase currents of this source must be configured as well. Without the phase currents configured under this source, the function would run only if the magnitude of the inherent unbalance factor is set to zero.

  To improve accuracy, a relatively low-ratio window CT can be used for instrumentation of the split-phase neutral current, and be wired to a 1 A or even sensitive ground relay input for extra sensitivity. CT primary and secondary ratings are entered under a separate menu. Directionality of wiring of the split-phase current is not important for proper functioning of the feature as long as the angle of the factor compensating for the inherent unbalance is set appropriately.

- **NTRL CUR UNBALCE 1 K MAG**: This setting defines magnitude of the factor compensating for the inherent unbalance of the bank. Under balanced conditions, the amount of the spill current measured in the neutral connection between the banks is proportional to the positive-sequence component of the total current of the two banks. This setting defines the magnitude of the proportionality factor. Quality of balancing the bank with a given value of this setting can be viewed under **ACTUAL VALUES** menu. An automatic setting procedure is available via the **COMMANDS** menu to calculate the compensating factor automatically. Setting the compensating factor to zero effectively disables the compensation. If further the slope is set to zero as well, this feature becomes a plain overcurrent element responding to the neutral split-phase current.

- **NTRL CUR UNBALCE 1 K ANG**: This setting defines angle of the factor compensating for the inherent unbalance of the bank. Under balanced conditions, the amount of the spill current measured in the neutral connection between the

banks is proportional to the positive-sequence component of the total current of the two banks. This setting defines the angle of the proportionality factor. Quality of balancing the bank with a given value of this setting can be viewed under ACTUAL VALUES menu. An automatic setting procedure is available under the COMMANDS menu to calculate the compensating factor automatically. See the Theory of Operation chapter for more information regarding the meaning of the inherent unbalance compensating factor of this protection method.

- **NTRL CUR UNBALCE 1 STG1 PKP** to **NTRL CUR UNBALCE 1 STG4 PKP**: These settings specify pickup thresholds for stages 1 through 4 in per-units (pu) of the nominal current of the ground current channel of the bank source. A value of 1 pu is the nominal secondary current, or the nominal primary current, respectively, as configured under the bank source of this function.
- **NTRL CUR UNBALCE 1 STG1 SLOPE** to **NTRL CUR UNBALCE 1 STG4 SLOPE**: These settings specify the slopes for stages 1 through 4. The slope setting is applied if the phase CTs are configured under the bank source. The magnitude of the zero-sequence current is applied as a restraining signal. Typically few percent of slope is enough to ensure security of the function. The factor compensating for the inherent bank unbalance zeroes out the operating signal under relatively balanced bank currents. If the said currents contain a significant zero sequence component, the quality of compensation is lower, hence the need for the restraint, and this slope setting. See the Theory of Operation chapter for more information on this protection method.
- **NTRL CUR UNBALCE 1 STG1 DEL** to **NTRL CUR UNBALCE 1 STG4 DEL**: This setting specifies the pickup time delay, individually per each stage of alarming/tripping. The timers use a common drop out time delay specified by the next setting.
- **NTRL CUR UNBALCE 1 DPO DELAY**: This setting controls a drop out delay for the operate FlexLogic operands. Note that individual stages apply individually configurable pickup delays, but use this common drop out delay.
- **NTRL CUR 1 BLK STG1** to **NTRL CUR 1 BLK STG4**: These settings are used to block the function on a per stage basis when required. At minimum this function shall be blocked when the two banks are not paralleled. Note that when unblocked, the function becomes operational after five cycles of intentional delay. High-set instantaneous protection on energization can be provided by a separate instantaneous overcurrent function.

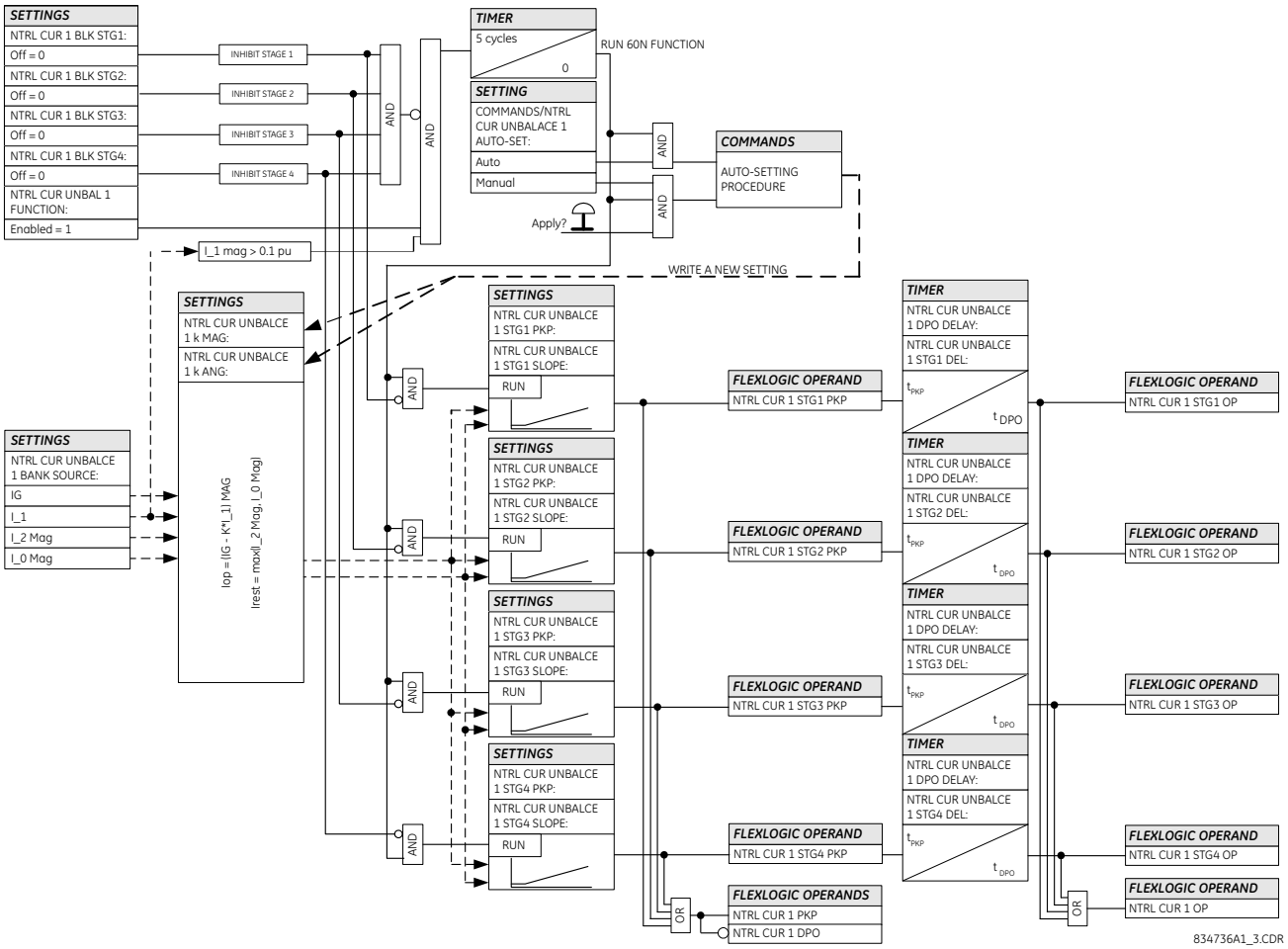

Figure 5–64: NEUTRAL CURRENT UNBALANCE SCHEME LOGIC

a) MAIN MENU

PATH: SETTINGS ⇨⇩ GROUPED ELEMENTS ⇨ SETTING GROUP 1(6) ⇨⇩ GROUND CURRENT

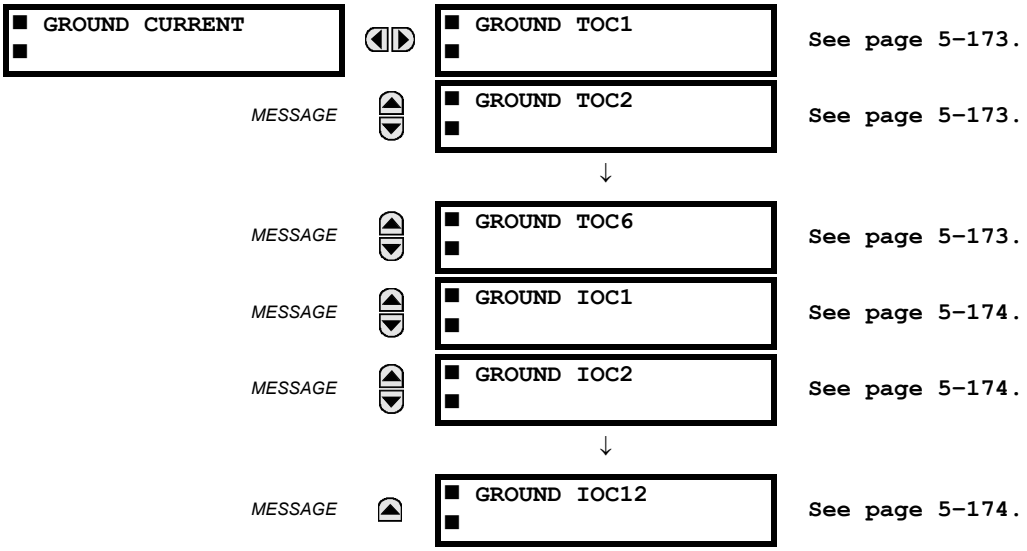

b) GROUND TIME OVERCURRENT (ANSI 51G, IEC PTOC)

PATH: SETTINGS ⇨⇩ GROUPED ELEMENTS ⇨ SETTING GROUP 1(6) ⇨⇩ GROUND CURRENT ⇨ GROUND TOC1(6)

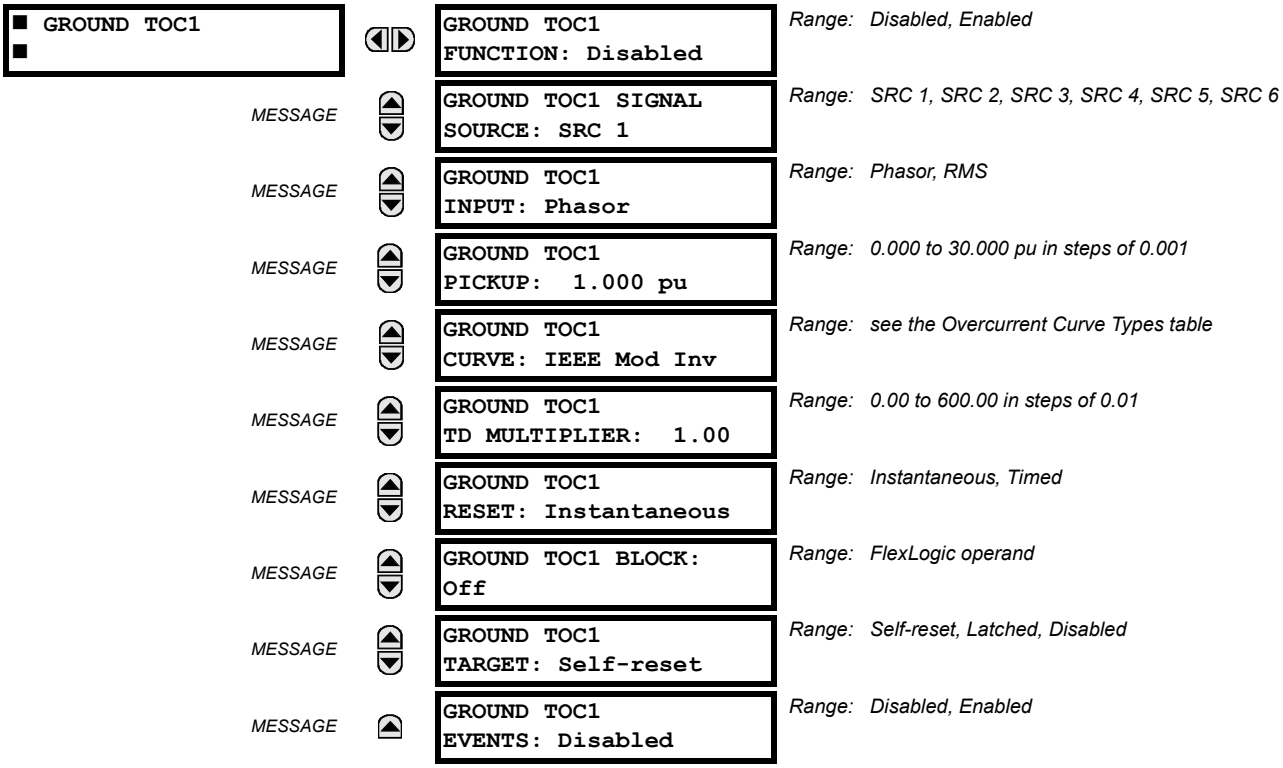

This element can provide a desired time-delay operating characteristic versus the applied current or be used as a simple definite time element. The ground current input value is the quantity measured by the ground input CT and is the fundamental phasor or RMS magnitude. Two methods of resetting operation are available: “Timed” and “Instantaneous” (see the

Inverse TOC Curve Characteristics section for details). When the element is blocked, the time accumulator will reset according to the reset characteristic. For example, if the element reset characteristic is set to “Instantaneous” and the element is blocked, the time accumulator will be cleared immediately.

NOTE

These elements measure the current that is connected to the ground channel of a CT/VT module. The conversion range of a standard channel is from 0.02 to 46 times the CT rating.

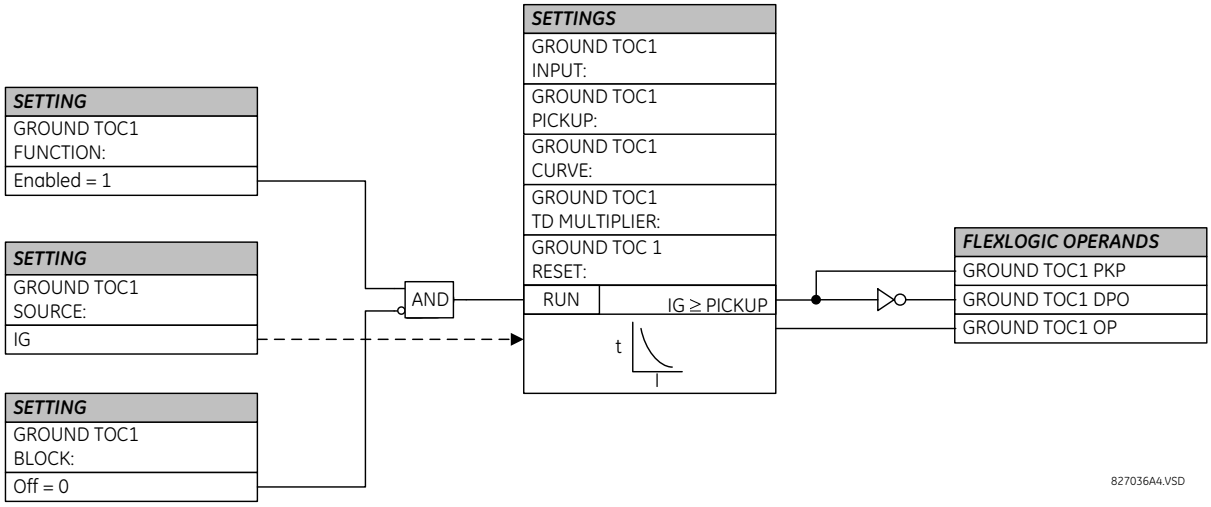

Figure 5–65: GROUND TOC1 SCHEME LOGIC

c) GROUND INSTANTANEOUS OVERCURRENT (ANSI 50G, IEC PIOC)

PATH: SETTINGS ⇨⇩ GROUPED ELEMENTS ⇨ SETTING GROUP 1(6) ⇨⇩ GROUND CURRENT ⇨⇩ GROUND IOC1(12)

■ GROUND IOC1 ■		GROUND IOC1 FUNCTION: Disabled	*Range: Disabled, Enabled*
	MESSAGE	GROUND IOC1 SIGNAL SOURCE: SRC 1	*Range: SRC 1, SRC 2, SRC 3, SRC 4, SRC 5, SRC 6*
	MESSAGE	GROUND IOC1 PICKUP: 1.000 pu	*Range: 0.000 to 30.000 pu in steps of 0.001*
	MESSAGE	GROUND IOC1 PICKUP DELAY: 0.00 s	*Range: 0.00 to 600.00 s in steps of 0.01*
	MESSAGE	GROUND IOC1 RESET DELAY: 0.00 s	*Range: 0.00 to 600.00 s in steps of 0.01*
	MESSAGE	GROUND IOC1 BLOCK: Off	*Range: FlexLogic operand*
	MESSAGE	GROUND IOC1 TARGET: Self-reset	*Range: Self-reset, Latched, Disabled*
	MESSAGE	GROUND IOC1 EVENTS: Disabled	*Range: Disabled, Enabled*

The ground instantaneous overcurrent element may be used as an instantaneous element with no intentional delay or as a definite time element. The ground current input is the quantity measured by the ground input CT and is the fundamental phasor magnitude.

NOTE

These elements measure the current that is connected to the ground channel of a CT/VT module. The conversion range of a standard channel is from 0.02 to 46 times the CT rating.

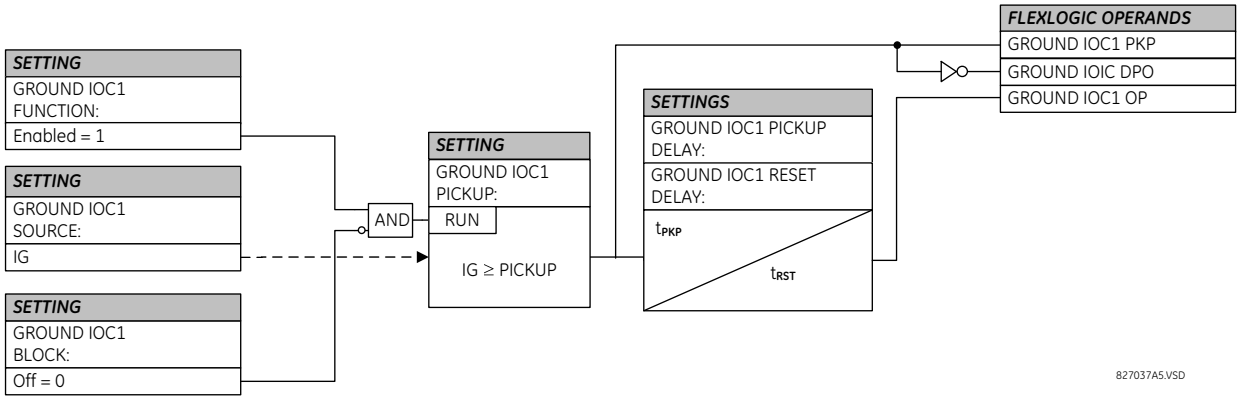

Figure 5–66: GROUND IOC1 SCHEME LOGIC

5.6.6 NEGATIVE SEQUENCE CURRENT

a) MAIN MENU

PATH: SETTINGS ⇨⇩ GROUPED ELEMENTS ⇨ SETTING GROUP 1(6) ⇨⇩ NEGATIVE SEQUENCE CURRENT

■ NEGATIVE SEQUENCE ■ CURRENT		■ NEG SEQ TOC1 ■	See below.
	MESSAGE	■ NEG SEQ TOC2 ■	See below.
	MESSAGE	■ NEG SEQ IOC1 ■	See page 5–177.
	MESSAGE	■ NEG SEQ IOC2 ■	See page 5–177.
	MESSAGE	■ NEG SEQ DIR OC1 ■	See page 5–178.
	MESSAGE	■ NEG SEQ DIR OC2 ■	See page 5–178.

b) NEGATIVE SEQUENCE TIME OVERCURRENT (ANSI 51Q, IEC PTOC)

PATH: SETTINGS ⇩ GROUPED ELEMENTS ⇨⇩ SETTING GROUP 1(6) ⇨⇩ NEGATIVE SEQUENCE CURRENT ⇨ NEG SEQ TOC1(2)

NEG SEQ TOC1	NEG SEQ TOC1 FUNCTION: Disabled	Range: Disabled, Enabled
MESSAGE	NEG SEQ TOC1 SIGNAL SOURCE: SRC 1	Range: SRC 1, SRC 2, SRC 3, SRC 4, SRC 5, SRC 6
MESSAGE	NEG SEQ TOC1 PICKUP: 1.000 pu	Range: 0.000 to 30.000 pu in steps of 0.001
MESSAGE	NEG SEQ TOC1 CURVE: IEEE Mod Inv	Range: see OVERCURRENT CURVE TYPES table
MESSAGE	NEG SEQ TOC1 TD MULTIPLIER: 1.00	Range: 0.00 to 600.00 in steps of 0.01
MESSAGE	NEG SEQ TOC1 RESET: Instantaneous	Range: Instantaneous, Timed
MESSAGE	NEG SEQ TOC1 BLOCK: Off	Range: FlexLogic operand
MESSAGE	NEG SEQ TOC1 TARGET: Self-reset	Range: Self-reset, Latched, Disabled
MESSAGE	NEG SEQ TOC1 EVENTS: Disabled	Range: Disabled, Enabled

The negative-sequence time overcurrent element may be used to determine and clear unbalance in the system. The input for calculating negative-sequence current is the fundamental phasor value.

Two methods of resetting operation are available; “Timed” and “Instantaneous” (refer to the Inverse Time Overcurrent Characteristics sub-section for details on curve setup, trip times and reset operation). When the element is blocked, the time accumulator resets according to the reset characteristic. For example, if the element reset characteristic is set to “Instantaneous” and the element is blocked, the time accumulator is cleared immediately.

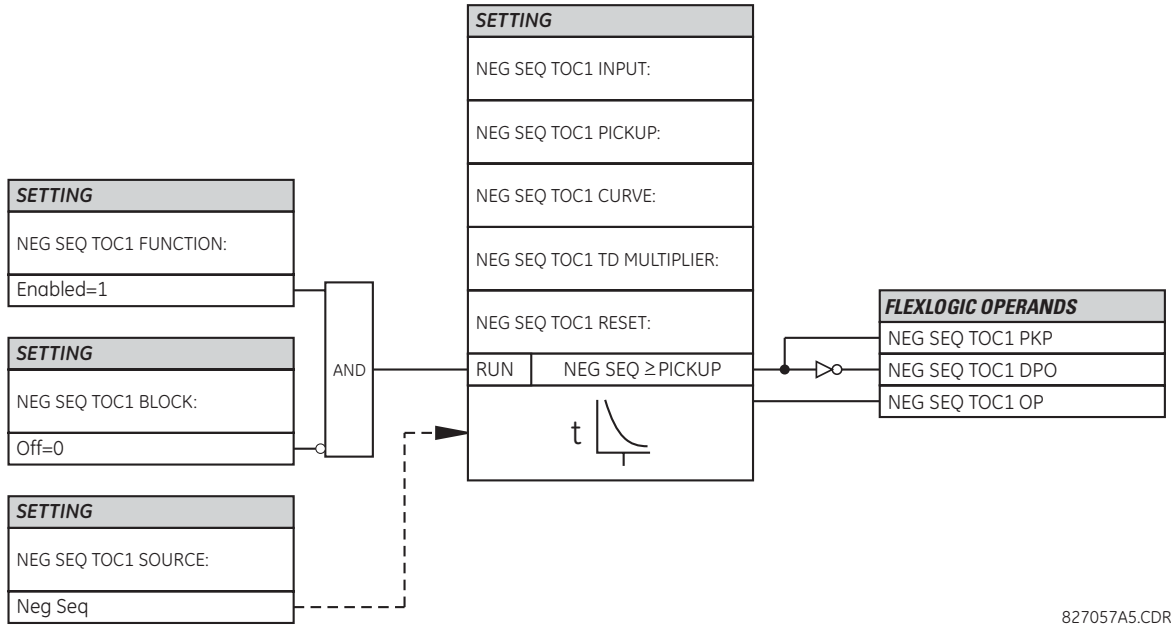

Figure 5–67: NEGATIVE SEQUENCE TOC1 SCHEME LOGIC

c) NEGATIVE SEQUENCE INSTANTANEOUS OVERCURRENT (ANSI 50Q, IEC PIOC)

PATH: SETTINGS ⇨⇩ GROUPED ELEMENTS ⇨ SETTING GROUP 1(6) ⇨⇩ NEGATIVE SEQUENCE CURRENT ⇨⇩ NEG SEQ OC1(2)

■ NEG SEQ IOC1 ■		NEG SEQ IOC1 FUNCTION: Disabled	*Range: Disabled, Enabled*
	MESSAGE	NEG SEQ IOC1 SIGNAL SOURCE: SRC 1	*Range: SRC 1, SRC 2, SRC 3, SRC 4, SRC 5, SRC 6*
	MESSAGE	NEG SEQ IOC1 PICKUP: 1.000 pu	*Range: 0.000 to 30.000 pu in steps of 0.001*
	MESSAGE	NEG SEQ IOC1 PICKUP DELAY: 0.00 s	*Range: 0.00 to 600.00 s in steps of 0.01*
	MESSAGE	NEG SEQ IOC1 RESET DELAY: 0.00 s	*Range: 0.00 to 600.00 s in steps of 0.01*
	MESSAGE	NEG SEQ IOC1 BLOCK: Off	*Range: FlexLogic operand*
	MESSAGE	NEG SEQ IOC1 TARGET: Self-reset	*Range: Self-reset, Latched, Disabled*
	MESSAGE	NEG SEQ IOC1 EVENTS: Disabled	*Range: Disabled, Enabled*

The negative-sequence instantaneous overcurrent element may be used as an instantaneous function with no intentional delay or as a definite time function. The element responds to the negative-sequence current fundamental frequency phasor magnitude (calculated from the phase currents) and applies a positive-sequence restraint for better performance: a small portion (12.5%) of the positive-sequence current magnitude is subtracted from the negative-sequence current magnitude when forming the operating quantity:

$$I_{op} = |I\_2| - K \cdot |I\_1| \quad \text{where } K = 1/8 \qquad \textbf{(EQ 5.18)}$$

The positive-sequence restraint allows for more sensitive settings by counterbalancing spurious negative-sequence currents resulting from:

- system unbalances under heavy load conditions
- transformation errors of current transformers (CTs) during three-phase faults
- fault inception and switch-off transients during three-phase faults

The positive-sequence restraint must be considered when testing for pickup accuracy and response time (multiple of pickup). The operating quantity depends on the way the test currents are injected into the relay (single-phase injection: $I_{op} = 0.2917 \cdot I_{injected}$; three-phase injection, opposite rotation: $I_{op} = I_{injected}$).

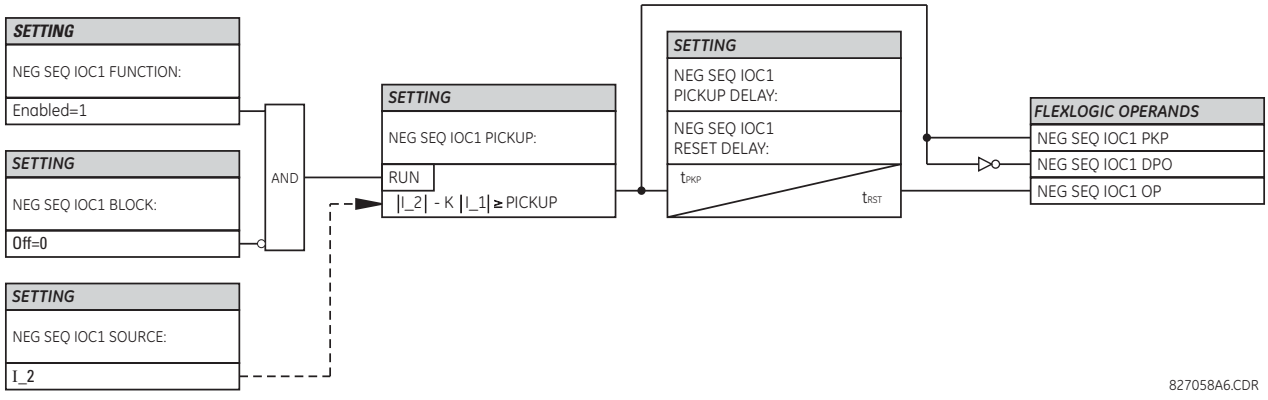

Figure 5–68: NEGATIVE SEQUENCE IOC1 SCHEME LOGIC

d) NEGATIVE SEQUENCE DIRECTIONAL OVERCURRENT (ANSI 67Q, IEC PDEF/PTOC)

PATH: SETTINGS ⇨⇩ GROUPED ELEMENTS ⇨ SETTING GROUP 1(6) ⇨⇩ NEGATIVE SEQUENCE CURRENT ⇨⇩ NEG SEQ DIR OC1(2)

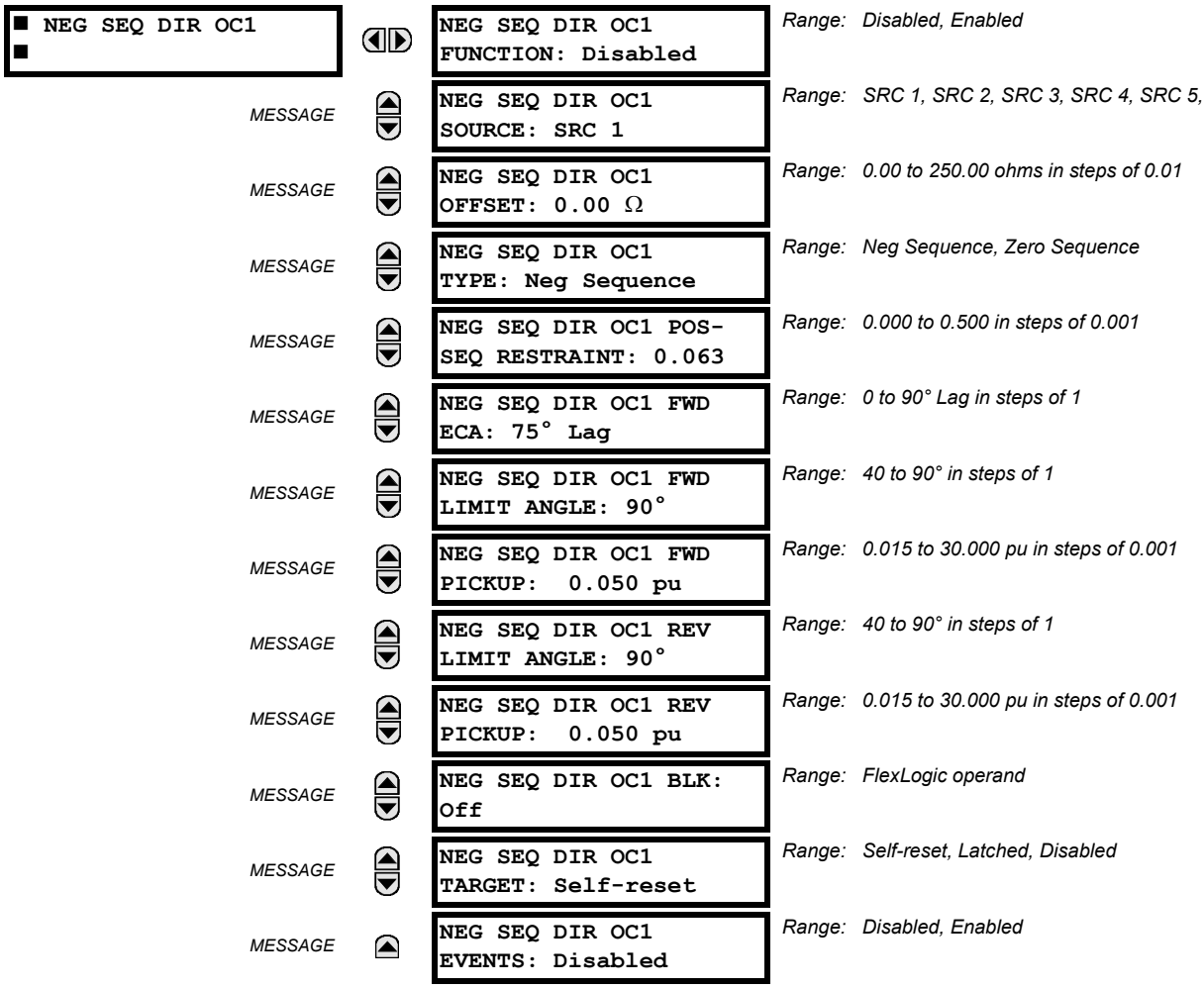

There are two negative-sequence directional overcurrent protection elements available. The element provides both forward and reverse fault direction indications through its output operands NEG SEQ DIR OC1 FWD and NEG SEQ DIR OC1 REV, respectively. The output operand is asserted if the magnitude of the operating current is above a pickup level (overcurrent unit) and the fault direction is seen as *forward* or *reverse*, respectively (directional unit).

The overcurrent unit of the element essentially responds to the magnitude of a fundamental frequency phasor of either the negative-sequence or neutral current as per user selection.

A positive-sequence restraint is applied for better performance: a small user-programmable portion of the positive-sequence current magnitude is subtracted from the negative or zero-sequence current magnitude, respectively, when forming the element operating quantity.

$$I_{op} = |I\_2| - K \times |I\_1| \quad \text{or} \quad I_{op} = 3 \times (|I\_0| - K \times |I\_1|) \qquad \textbf{(EQ 5.19)}$$

The positive-sequence restraint allows for more sensitive settings by counterbalancing spurious negative-sequence and zero-sequence currents resulting from:

- System unbalances under heavy load conditions.
- Transformation errors of current transformers (CTs).
- Fault inception and switch-off transients.

The positive-sequence restraint must be considered when testing for pick-up accuracy and response time (multiple of pickup). The positive-sequence restraint is removed for low currents. If the positive-sequence current is less than 0.8 pu, then the restraint is removed by changing the constant *K* to zero. This results in better response to high-resistance faults when the unbalance is very small and there is no danger of excessive CT errors, since the current is low.

The *operating quantity* depends on the way the test currents are injected into the C70. For single phase injection:

- $I_{op} = ⅓ \times (1 - K) \times I_{injected}$ for I_2 mode.
- $I_{op} = (1 - K) \times I_{injected}$ for I_0 mode if I_1 > 0.8 pu.

The *directional unit* uses the negative-sequence current (I_2) and negative-sequence voltage (V_2).

The following tables define the negative-sequence directional overcurrent element.

Table 5–29: NEGATIVE-SEQUENCE DIRECTIONAL OVERCURRENT UNIT

MODE	OPERATING CURRENT
Negative-sequence	$I_{op} = \lvert I\_2\rvert - K \times \lvert I\_1\rvert$
Zero-sequence	$I_{op} = 3 \times (\lvert I\_0\rvert - K \times \lvert I\_1\rvert)$ if $\lvert I\_1\rvert > 0.8$ pu $I_{op} = 3 \times \lvert I\_0\rvert$ if $\lvert I\_1\rvert \le 0.8$ pu

Table 5–30: NEGATIVE-SEQUENCE DIRECTIONAL UNIT

DIRECTION	COMPARED PHASORS	
Forward	–V_2 + Z_offset × I_2	I_2 × 1∠ECA
Reverse	–V_2 + Z_offset × I_2	–(I_2 × 1∠ECA)

Z_offset is the offset impedance, for which magnitude is the OFFSET setting and angle is the FWD ECA.

The negative-sequence voltage must be greater than **PRODUCT SETUP ⇨⇩ DISPLAY PROPERTIES ⇨⇩ VOLTAGE CUT-OFF LEVEL** to be validated for use as polarizing signal. Additionally, when offset impedance is applied and negative-sequence current is above 0.2 pu, compensated negative-sequence voltage -V_2 + Z_offset x I_2 has to be above 0.02 pu in order to discriminate fault direction; otherwise when negative-sequence current is less than 0.2 pu, -V_2 is then used as the polarizing signal. If the polarizing signal is not validated, neither forward nor reverse indication is given. The following figure explains the usage of the voltage polarized directional unit of the element. It shows the phase angle comparator characteristics for a phase A to ground fault, with settings of

ECA = 75° (element characteristic angle = centerline of operating characteristic)
FWD LA = 80° (forward limit angle = ± the angular limit with the ECA for operation)
REV LA = 80° (reverse limit angle = ± the angular limit with the ECA for operation)

The element incorporates a current reversal logic: if the reverse direction is indicated for at least 1.25 of a power system cycle, the prospective forward indication will be delayed by 1.5 of a power system cycle. The element is designed to emulate an electromechanical directional device. Larger operating and polarizing signals will result in faster directional discrimination bringing more security to the element operation.

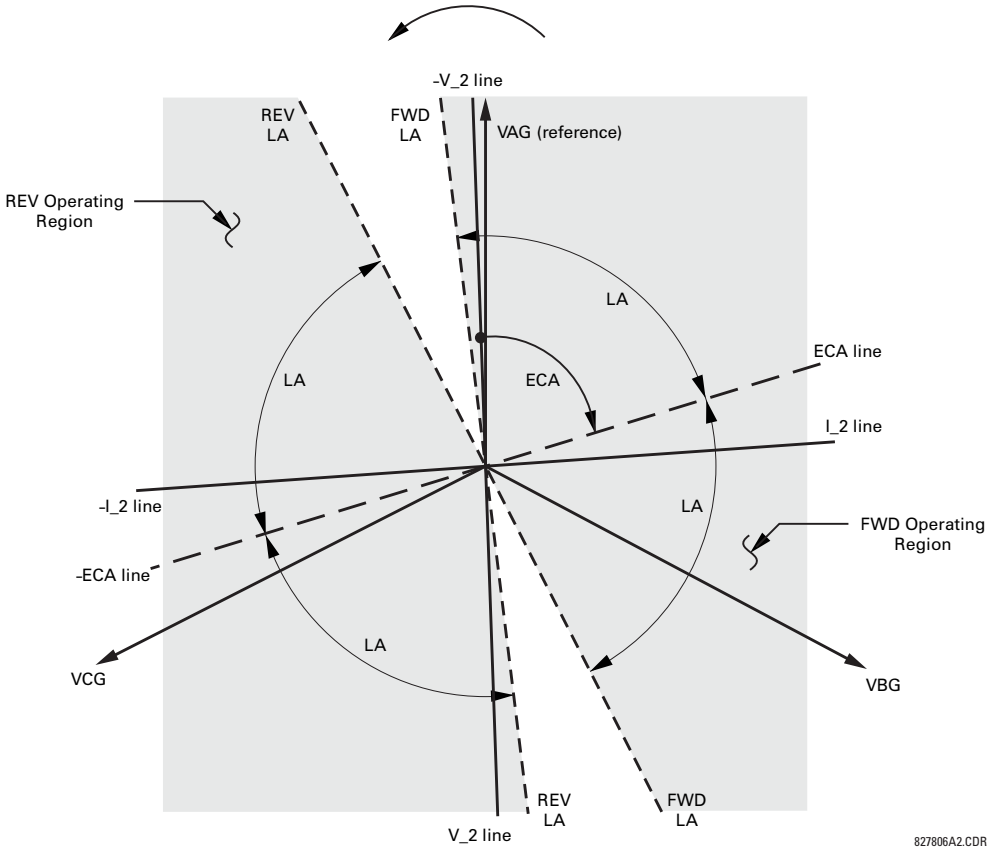

Figure 5–69: NEGATIVE-SEQUENCE DIRECTIONAL CHARACTERISTIC

The forward-looking function is designed to be more secure as compared to the reverse-looking function, and therefore should be used for the tripping direction. The reverse-looking function is designed to be faster as compared to the forward-looking function and should be used for the blocking direction. This allows for better protection coordination. Take this bias into account when using the negative-sequence directional overcurrent element to directionalize other protection elements. The negative-sequence current must be greater than the **PRODUCT SETUP ⇨⇩ DISPLAY PROPERTIES ⇨⇩ CURRENT CUT-OFF LEVEL** setting value.

- **NEG SEQ DIR OC1 OFFSET:** This setting specifies the offset impedance used by this protection. The primary application for the offset impedance is to guarantee correct identification of fault direction on series compensated lines (see the Application of Settings chapter for information on how to calculate this setting). In regular applications, the offset impedance ensures proper operation even if the negative-sequence voltage at the relaying point is very small. If this is the intent, the offset impedance shall not be larger than the negative-sequence impedance of the protected circuit. Practically, it is several times smaller. The offset impedance is entered in secondary ohms. See the Theory of Operation chapter for additional details.
- **NEG SEQ DIR OC1 TYPE:** This setting selects the operating mode for the overcurrent unit of the element. The choices are “Neg Sequence” and “Zero Sequence”. In some applications it is advantageous to use a directional negative-sequence overcurrent function instead of a directional zero-sequence overcurrent function as inter-circuit mutual effects are minimized.
- **NEG SEQ DIR OC1 POS-SEQ RESTRAINT**: This setting controls the positive-sequence restraint. Set to 0.063 (in “Zero Sequence” mode) or 0.125 (in “Neg Sequence” mode) for backward compatibility with revisions 3.40 and earlier. Set to zero to remove the restraint. Set higher if large system unbalances or poor CT performance are expected.
- **NEG SEQ DIR OC1 FWD ECA:** This setting select the element characteristic angle (ECA) for the forward direction. The element characteristic angle in the reverse direction is the angle set for the forward direction shifted by 180°.
- **NEG SEQ DIR OC1 FWD LIMIT ANGLE:** This setting defines a symmetrical (in both directions from the ECA) limit angle for the forward direction.

- **NEG SEQ DIR OC1 FWD PICKUP:** This setting defines the pickup level for the overcurrent unit in the forward direction. Upon **NEG SEQ DIR OC1 TYPE** selection, this pickup threshold applies to zero- or negative-sequence current. When selecting this setting it must be kept in mind that the design uses a *positive-sequence restraint* technique.
- **NEG SEQ DIR OC1 REV LIMIT ANGLE:** This setting defines a symmetrical (in both directions from the ECA) limit angle for the reverse direction.
- **NEG SEQ DIR OC1 REV PICKUP:** This setting defines the pickup level for the overcurrent unit in the reverse direction. Upon **NEG SEQ DIR OC1 TYPE** selection, this pickup threshold applies to zero- or negative-sequence current. When selecting this setting it must be kept in mind that the design uses a *positive-sequence restraint* technique.

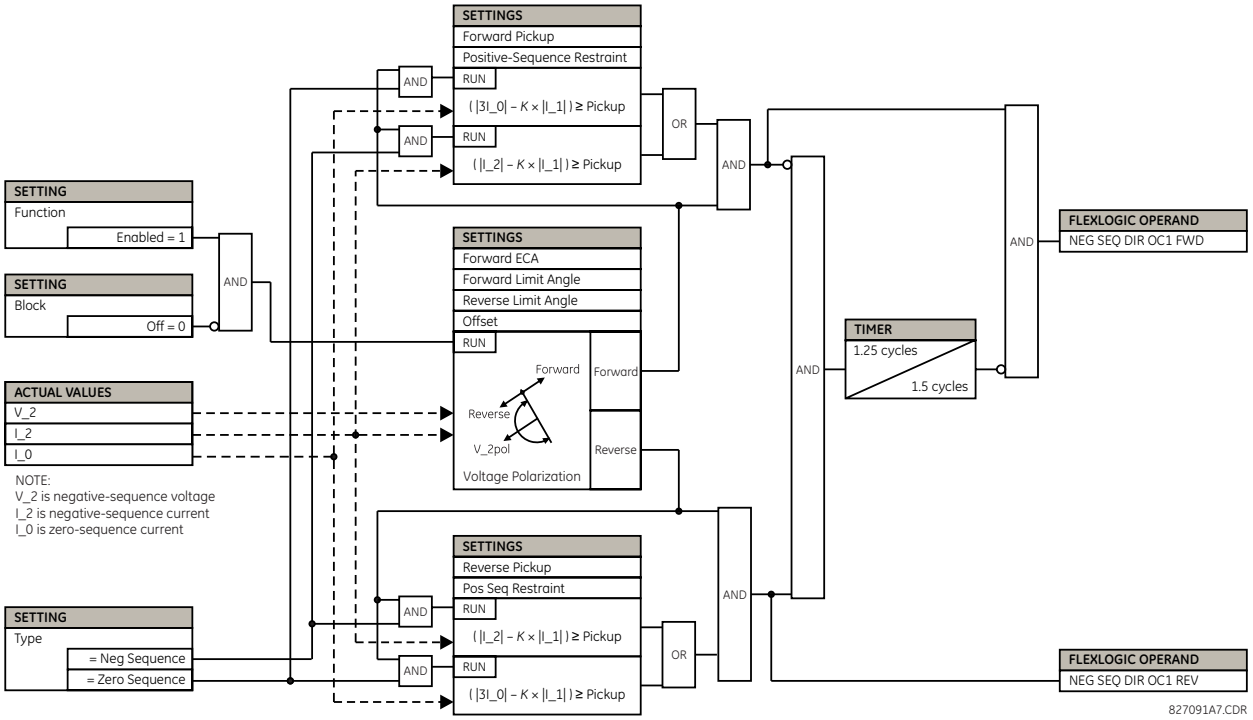

Figure 5–70: NEGATIVE SEQUENCE DIRECTIONAL OC1 SCHEME LOGIC

5.6.7 BREAKER FAILURE (ANSI 50BF)

PATH: SETTINGS ⇨⇩ GROUPED ELEMENTS ⇨ SETTING GROUP 1(6) ⇨⇩ BREAKER FAILURE ⇨ BREAKER FAILURE 1

	BF1 FUNCTION: Disabled	Range: Disabled, Enabled
MESSAGE	BF1 MODE: 3-Pole	Range: 3-Pole, 1-Pole
MESSAGE	BF1 SOURCE: SRC 1	Range: SRC 1, SRC 2, SRC 3, SRC 4, SRC 5, SRC 6
MESSAGE	BF1 USE AMP SUPV: Yes	Range: Yes, No
MESSAGE	BF1 USE SEAL-IN: Yes	Range: Yes, No
MESSAGE	BF1 3-POLE INITIATE: Off	Range: FlexLogic operand
MESSAGE	BF1 BLOCK: Off	Range: FlexLogic operand
MESSAGE	BF1 PH AMP SUPV PICKUP: 1.050 pu	Range: 0.001 to 30.000 pu in steps of 0.001
MESSAGE	BF1 N AMP SUPV PICKUP: 1.050 pu	Range: 0.001 to 30.000 pu in steps of 0.001
MESSAGE	BF1 USE TIMER 1: Yes	Range: Yes, No
MESSAGE	BF1 TIMER 1 PICKUP DELAY: 0.000 s	Range: 0.000 to 65.535 s in steps of 0.001
MESSAGE	BF1 USE TIMER 2: Yes	Range: Yes, No
MESSAGE	BF1 TIMER 2 PICKUP DELAY: 0.000 s	Range: 0.000 to 65.535 s in steps of 0.001
MESSAGE	BF1 USE TIMER 3: Yes	Range: Yes, No
MESSAGE	BF1 TIMER 3 PICKUP DELAY: 0.000 s	Range: 0.000 to 65.535 s in steps of 0.001
MESSAGE	BF1 BKR POS1 ϕA/3P: Off	Range: FlexLogic operand
MESSAGE	BF1 BKR POS2 ϕA/3P: Off	Range: FlexLogic operand
MESSAGE	BF1 BREAKER TEST ON: Off	Range: FlexLogic operand
MESSAGE	BF1 PH AMP HISET PICKUP: 1.050 pu	Range: 0.001 to 30.000 pu in steps of 0.001
MESSAGE	BF1 N AMP HISET PICKUP: 1.050 pu	Range: 0.001 to 30.000 pu in steps of 0.001
MESSAGE	BF1 PH AMP LOSET PICKUP: 1.050 pu	Range: 0.001 to 30.000 pu in steps of 0.001

MESSAGE
BF1 N AMP LOSET PICKUP: 1.050 pu
Range: 0.001 to 30.000 pu in steps of 0.001

MESSAGE
BF1 LOSET TIME DELAY: 0.000 s
Range: 0.000 to 65.535 s in steps of 0.001

MESSAGE
BF1 TRIP DROPOUT DELAY: 0.000 s
Range: 0.000 to 65.535 s in steps of 0.001

MESSAGE
BF1 TARGET: Self-reset
Range: Self-reset, Latched, Disabled

MESSAGE
BF1 EVENTS: Disabled
Range: Disabled, Enabled

MESSAGE
BF1 PH A INITIATE: Off
Range: FlexLogic operand
Valid only for 1-Pole breaker failure schemes.

MESSAGE
BF1 PH B INITIATE: Off
Range: FlexLogic operand
Valid only for 1-Pole breaker failure schemes.

MESSAGE
BF1 PH C INITIATE: Off
Range: FlexLogic operand
Valid only for 1-Pole breaker failure schemes.

MESSAGE
BF1 BKR POS1 ϕB Off
Range: FlexLogic operand
Valid only for 1-Pole breaker failure schemes.

MESSAGE
BF1 BKR POS1 ϕC Off
Range: FlexLogic operand
Valid only for 1-Pole breaker failure schemes.

MESSAGE
BF1 BKR POS2 ϕB Off
Range: FlexLogic operand
Valid only for 1-Pole breaker failure schemes.

MESSAGE
BF1 BKR POS2 ϕC Off
Range: FlexLogic operand
Valid only for 1-Pole breaker failure schemes.

In general, a breaker failure scheme determines that a breaker signaled to trip has not cleared a fault within a definite time, so further tripping action must be performed. Tripping from the breaker failure scheme should trip all breakers, both local and remote, that can supply current to the faulted zone. Usually operation of a breaker failure element will cause clearing of a larger section of the power system than the initial trip. Because breaker failure can result in tripping a large number of breakers and this affects system safety and stability, a very high level of security is required.

Two schemes are provided: one for three-pole tripping only (identified by the name “3BF”) and one for three pole plus single-pole operation (identified by the name “1BF”). The philosophy used in these schemes is identical. The operation of a breaker failure element includes three stages: initiation, determination of a breaker failure condition, and output.

INITIATION STAGE

A FlexLogic operand representing the protection trip signal initially sent to the breaker must be selected to initiate the scheme. The initiating signal should be sealed-in if primary fault detection can reset before the breaker failure timers have finished timing. The seal-in is supervised by current level, so it is reset when the fault is cleared. If desired, an incomplete sequence seal-in reset can be implemented by using the initiating operand to also initiate a FlexLogic timer, set longer than any breaker failure timer, whose output operand is selected to block the breaker failure scheme.

Schemes can be initiated either directly or with current level supervision. It is particularly important in any application to decide if a current-supervised initiate is to be used. The use of a current-supervised initiate results in the breaker failure element not being initiated for a breaker that has very little or no current flowing through it, which may be the case for transformer faults. For those situations where it is required to maintain breaker fail coverage for fault levels below the **BF1 PH AMP SUPV PICKUP** or the **BF1 N AMP SUPV PICKUP** setting, a current supervised initiate should *not* be used. This feature should be utilized for those situations where coordinating margins may be reduced when high speed reclosing is used. Thus, if this choice is made, fault levels must always be above the supervision pickup levels for dependable operation of the breaker fail scheme. This can also occur in breaker-and-a-half or ring bus configurations where the first breaker closes into a fault; the protection trips and attempts to initiate breaker failure for the second breaker, which is in the process of closing, but does not yet have current flowing through it.

When the scheme is initiated, it immediately sends a trip signal to the breaker initially signaled to trip (this feature is usually described as re-trip). This reduces the possibility of widespread tripping that results from a declaration of a failed breaker.

DETERMINATION OF A BREAKER FAILURE CONDITION

The schemes determine a breaker failure condition via three *paths*. Each of these paths is equipped with a time delay, after which a failed breaker is declared and trip signals are sent to all breakers required to clear the zone. The delayed paths are associated with breaker failure timers 1, 2, and 3, which are intended to have delays increasing with increasing timer numbers. These delayed paths are individually enabled to allow for maximum flexibility.

Timer 1 logic (early path) is supervised by a fast-operating breaker auxiliary contact. If the breaker is still closed (as indicated by the auxiliary contact) and fault current is detected after the delay interval, an output is issued. Operation of the breaker auxiliary switch indicates that the breaker has mechanically operated. The continued presence of current indicates that the breaker has failed to interrupt the circuit.

Timer 2 logic (main path) is not supervised by a breaker auxiliary contact. If fault current is detected after the delay interval, an output is issued. This path is intended to detect a breaker that opens mechanically but fails to interrupt fault current; the logic therefore does not use a breaker auxiliary contact.

The timer 1 and 2 paths provide two levels of current supervision, high-set and low-set, that allow the supervision level to change from a current that flows before a breaker inserts an opening resistor into the faulted circuit to a lower level after resistor insertion. The high-set detector is enabled after timeout of timer 1 or 2, along with a timer that enables the low-set detector after its delay interval. The delay interval between high-set and low-set is the expected breaker opening time. Both current detectors provide a fast operating time for currents at small multiples of the pickup value. The overcurrent detectors are required to operate after the breaker failure delay interval in case current still flows through the breaker, and they are supervised by a fast reset element described as follows.

Timer 3 logic (slow path) is supervised by a breaker auxiliary contact and a control switch contact used to indicate that the breaker is in or out-of-service, disabling this path when the breaker is out-of-service for maintenance. There is no current level check in this logic as it is intended to detect low magnitude faults and it is therefore the slowest to operate.

OUTPUT

The outputs from the schemes are:

- FlexLogic operands that report on the operation of portions of the scheme
- FlexLogic operand used to re-trip the protected breaker
- FlexLogic operands that initiate tripping required to clear the faulted zone. The trip output can be sealed-in for an adjustable period.
- Target message indicating a failed breaker has been declared
- Illumination of the faceplate Trip LED (and the Phase A, B or C LED, if applicable)

MAIN PATH SEQUENCE

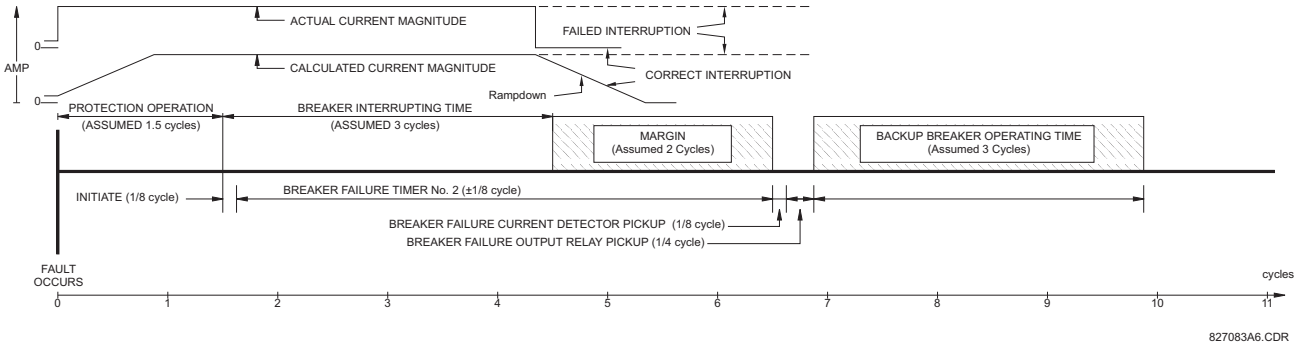

Figure 5–71: BREAKER FAILURE MAIN PATH SEQUENCE

The current supervision elements reset in less than 0.7 of a power cycle for any multiple of pickup current as shown below.

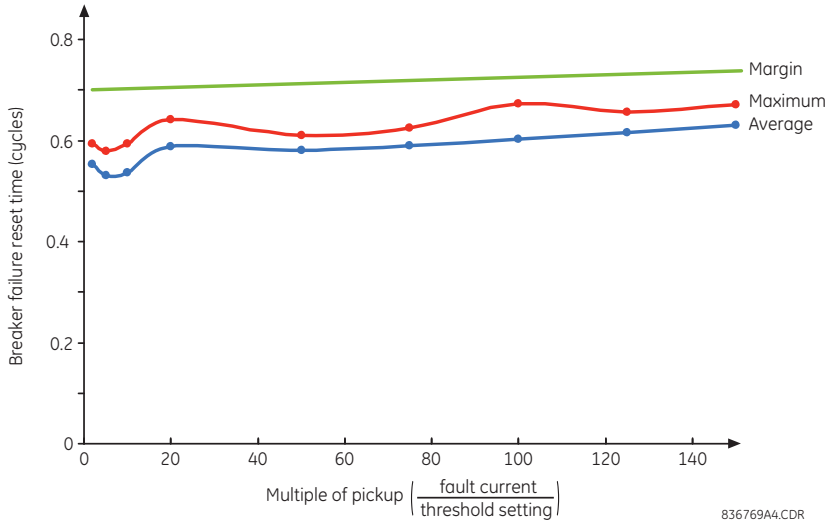

Figure 5–72: BREAKER FAILURE OVERCURRENT SUPERVISION RESET TIME

SETTINGS

- **BF1 MODE:** This setting is used to select the breaker failure operating mode: single or three pole.
- **BF1 USE AMP SUPV:** If set to "Yes", the element will only be initiated if current flowing through the breaker is above the supervision pickup level.
- **BF1 USE SEAL-IN:** If set to "Yes", the element will only be sealed-in if current flowing through the breaker is above the supervision pickup level.
- **BF1 3-POLE INITIATE:** This setting selects the FlexLogic operand that will initiate three-pole tripping of the breaker.
- **BF1 PH AMP SUPV PICKUP:** This setting is used to set the phase current initiation and seal-in supervision level. Generally this setting should detect the lowest expected fault current on the protected breaker. It can be set as low as necessary (lower than breaker resistor current or lower than load current) – high-set and low-set current supervision will guarantee correct operation.
- **BF1 N AMP SUPV PICKUP:** This setting is used to set the neutral current initiate and seal-in supervision level. Generally this setting should detect the lowest expected fault current on the protected breaker. Neutral current supervision is used only in the three phase scheme to provide increased sensitivity. This setting is valid only for three-pole tripping schemes.
- **BF1 USE TIMER 1:** If set to "Yes", the early path is operational.
- **BF1 TIMER 1 PICKUP DELAY:** Timer 1 is set to the shortest time required for breaker auxiliary contact Status-1 to open, from the time the initial trip signal is applied to the breaker trip circuit, plus a safety margin.
- **BF1 USE TIMER 2:** If set to "Yes", the main path is operational.
- **BF1 TIMER 2 PICKUP DELAY:** Timer 2 is set to the expected opening time of the breaker, plus a safety margin. This safety margin was historically intended to allow for measuring and timing errors in the breaker failure scheme equipment. In microprocessor relays this time is not significant. In C70 relays, which use a Fourier transform, the calculated current magnitude ramps-down to zero one power frequency cycle after the current is interrupted, however this lag does not need to be included in the overall margin duration due to a novel current supervision reset element, as it occurs after current interruption. As shown in the previous figure, this current supervision reset element guarantees breaker failure reset in less than 0.7 power cycles for any subsidence current and irrespective of the magnitude of the fault current.

  Note that in bulk oil circuit breakers, the interrupting time for currents less than 25% of the interrupting rating can be significantly longer than the normal interrupting time.
- **BF1 USE TIMER 3:** If set to "Yes", the Slow Path is operational.
- **BF1 TIMER 3 PICKUP DELAY:** Timer 3 is set to the same interval as timer 2, plus an increased safety margin. Because this path is intended to operate only for low level faults, the delay can be in the order of 300 to 500 ms.

- **BF1 BKR POS1 ϕA/3P:** This setting selects the FlexLogic operand that represents the protected breaker early-type auxiliary switch contact (52/a). When using the single-pole breaker failure scheme, this operand represents the protected breaker early-type auxiliary switch contact on pole A. This is normally a non-multiplied form-A contact. The contact may even be adjusted to have the shortest possible operating time.
- **BF1 BKR POS2 ϕA/3P:** This setting selects the FlexLogic operand that represents the breaker normal-type auxiliary switch contact (52/a). When using the single-pole breaker failure scheme, this operand represents the protected breaker auxiliary switch contact on pole A. This may be a multiplied contact.
- **BF1 BREAKER TEST ON:** This setting is used to select the FlexLogic operand that represents the breaker in-service/out-of-service switch set to the out-of-service position.
- **BF1 PH AMP HISET PICKUP:** This setting sets the phase current output supervision level. Generally this setting should detect the lowest expected fault current on the protected breaker, before a breaker opening resistor is inserted.
- **BF1 N AMP HISET PICKUP:** This setting sets the neutral current output supervision level. Generally this setting should detect the lowest expected fault current on the protected breaker, before a breaker opening resistor is inserted. Neutral current supervision is used only in the three pole scheme to provide increased sensitivity. *This setting is valid only for three-pole breaker failure schemes*.
- **BF1 PH AMP LOSET PICKUP:** This setting sets the phase current output supervision level. Generally this setting should detect the lowest expected fault current on the protected breaker, after a breaker opening resistor is inserted (approximately 90% of the resistor current).
- **BF1 N AMP LOSET PICKUP:** This setting sets the neutral current output supervision level. Generally this setting should detect the lowest expected fault current on the protected breaker, after a breaker opening resistor is inserted (approximately 90% of the resistor current). *This setting is valid only for three-pole breaker failure schemes*.
- **BF1 LOSET TIME DELAY:** Sets the pickup delay for current detection after opening resistor insertion.
- **BF1 TRIP DROPOUT DELAY:** This setting is used to set the period of time for which the trip output is sealed-in. This timer must be coordinated with the automatic reclosing scheme of the failed breaker, to which the breaker failure element sends a cancel reclosure signal. Reclosure of a remote breaker can also be prevented by holding a transfer trip signal on longer than the reclaim time.
- **BF1 PH A INITIATE / BF1 PH B INITIATE / BF 1 PH C INITIATE:** These settings select the FlexLogic operand to initiate phase A, B, or C single-pole tripping of the breaker and the phase A, B, or C portion of the scheme, accordingly. *This setting is only valid for single-pole breaker failure schemes*.
- **BF1 BKR POS1 ϕB / BF1 BKR POS 1 ϕC:** These settings select the FlexLogic operand to represents the protected breaker early-type auxiliary switch contact on poles B or C, accordingly. This contact is normally a non-multiplied Form-A contact. The contact may even be adjusted to have the shortest possible operating time. *This setting is valid only for single-pole breaker failure schemes*.
- **BF1 BKR POS2 ϕB:** Selects the FlexLogic operand that represents the protected breaker normal-type auxiliary switch contact on pole B (52/a). This may be a multiplied contact. *This setting is valid only for single-pole breaker failure schemes*.
- **BF1 BKR POS2 ϕC:** This setting selects the FlexLogic operand that represents the protected breaker normal-type auxiliary switch contact on pole C (52/a). This may be a multiplied contact. For single-pole operation, the scheme has the same overall general concept except that it provides re-tripping of each single pole of the protected breaker. The approach shown in the following single pole tripping diagram uses the initiating information to determine which pole is supposed to trip. The logic is segregated on a per-pole basis. The overcurrent detectors have ganged settings. *This setting is valid only for single-pole breaker failure schemes*.

  Upon operation of the breaker failure element for a single pole trip command, a three-pole trip command should be given via output operand BKR FAIL 1 TRIP OP.

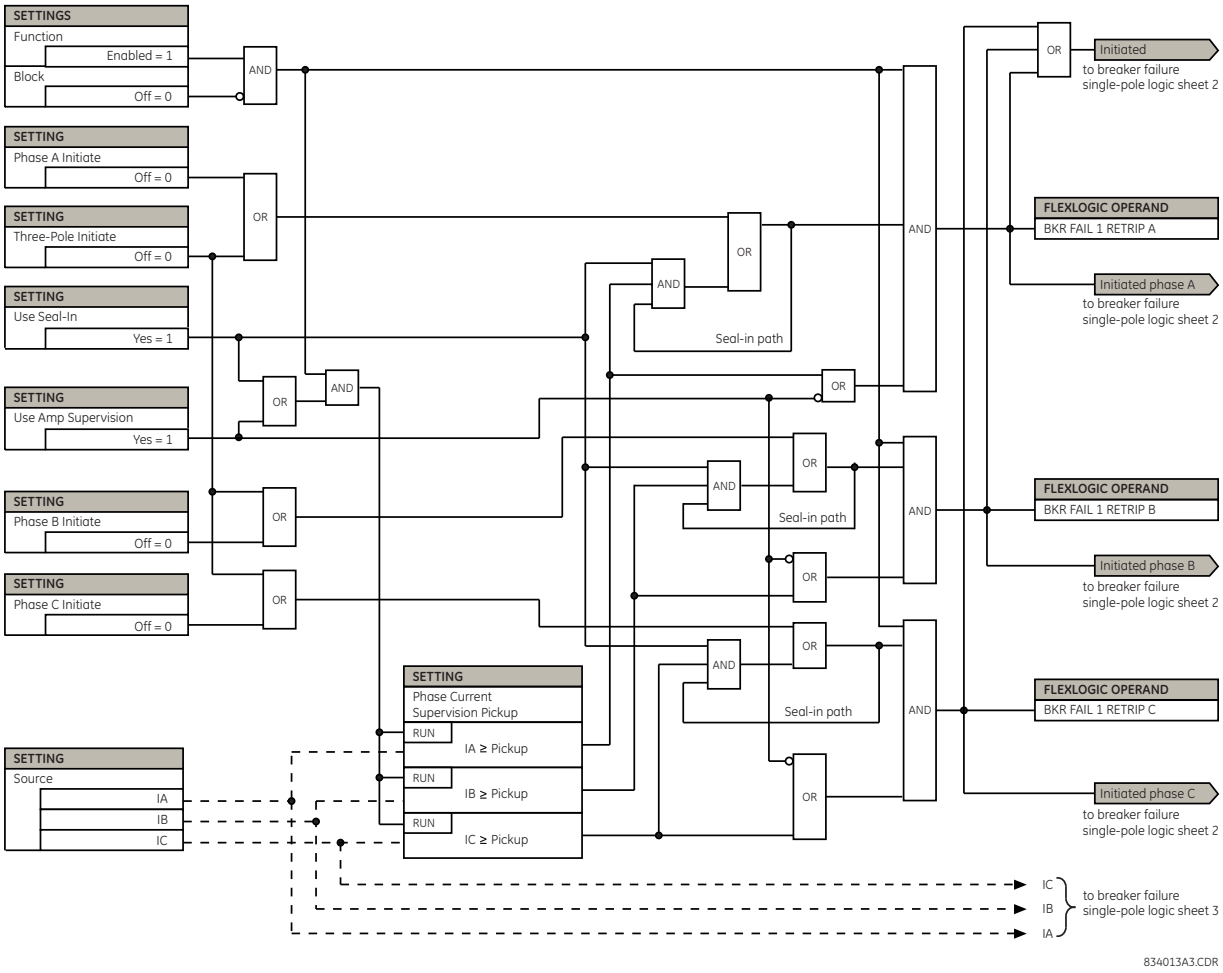

Figure 5–73: SINGLE-POLE BREAKER FAILURE, INITIATE

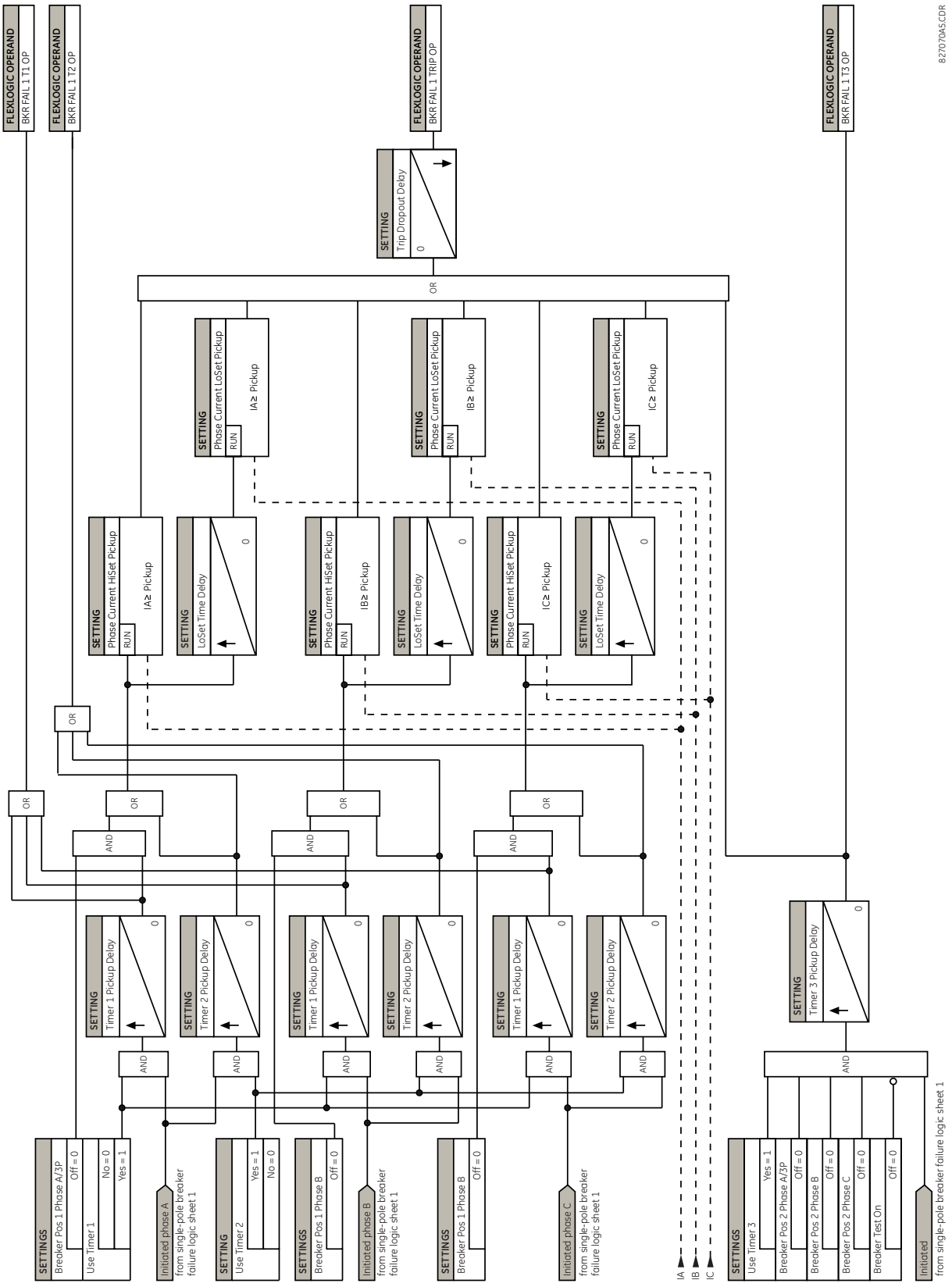

Figure 5–74: SINGLE-POLE BREAKER FAILURE, TIMERS

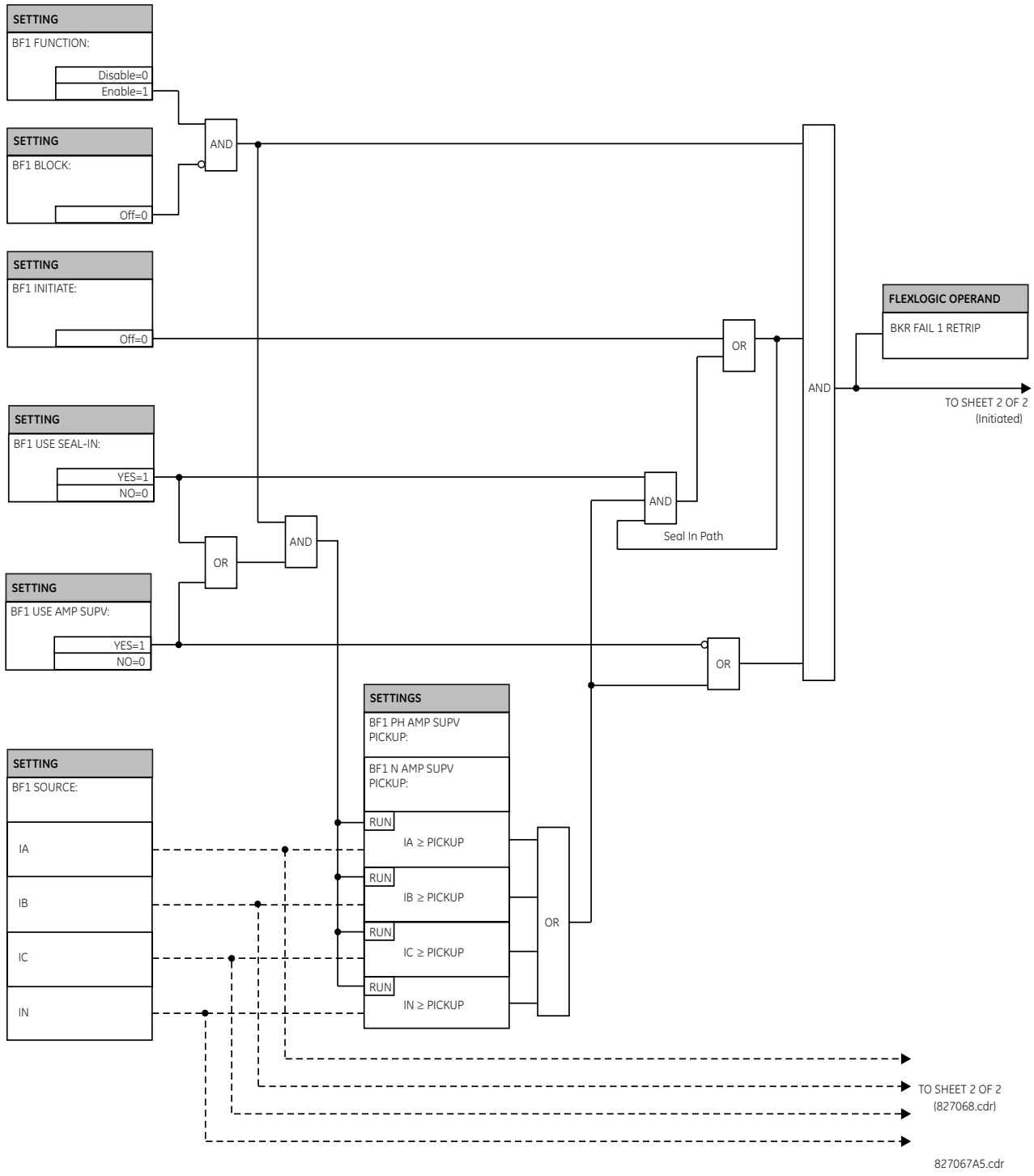

Figure 5–75: THREE-POLE BREAKER FAILURE, INITIATE

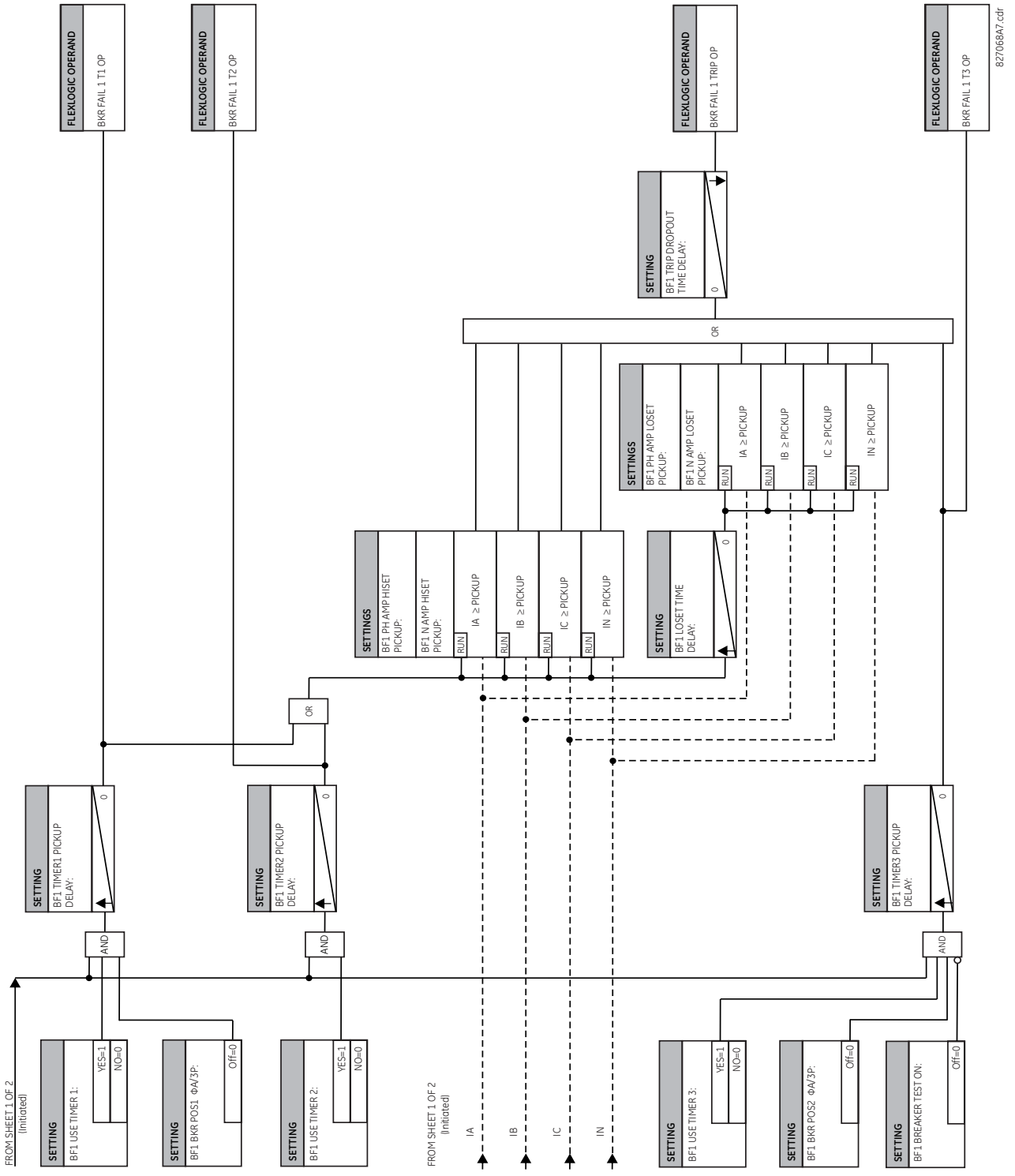

Figure 5–76: THREE-POLE BREAKER FAILURE, TIMERS

a) MAIN MENU

PATH: SETTINGS ⇨⇩ GROUPED ELEMENTS ⇨ SETTING GROUP 1(6) ⇨⇩ VOLTAGE ELEMENTS

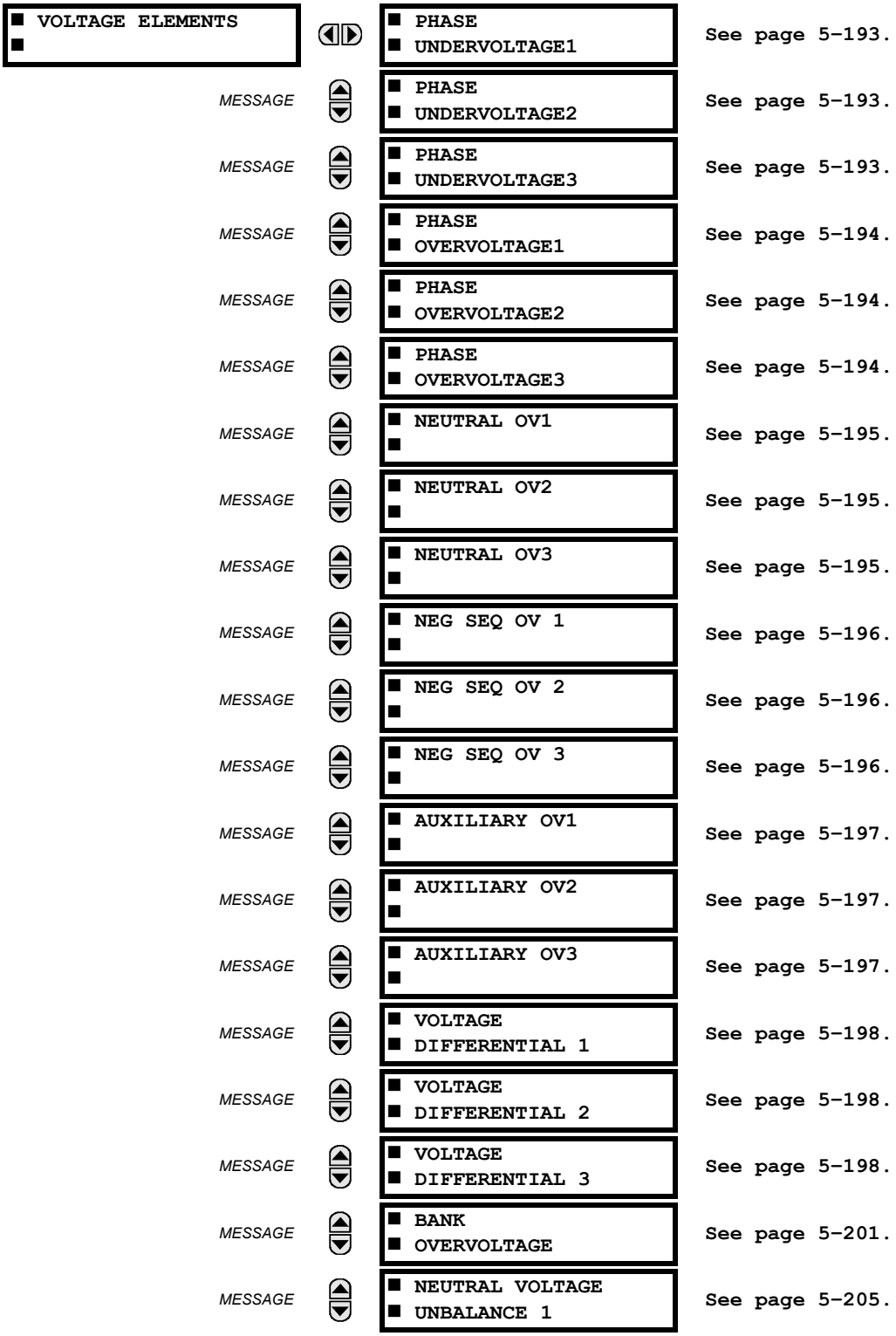

MESSAGE ▲▼ ■ NEUTRAL VOLTAGE UNBALANCE 2 — See page 5–205.

MESSAGE ▲ ■ NEUTRAL VOLTAGE UNBALANCE 3 — See page 5–205.

These protection elements can be used for a variety of applications such as:

- ***Undervoltage Protection:*** For voltage sensitive loads, such as induction motors, a drop in voltage increases the drawn current which may cause dangerous overheating in the motor. The undervoltage protection feature can be used to either cause a trip or generate an alarm when the voltage drops below a specified voltage setting for a specified time delay.
- ***Permissive Functions:*** The undervoltage feature may be used to block the functioning of external devices by operating an output relay when the voltage falls below the specified voltage setting. The undervoltage feature may also be used to block the functioning of other elements through the block feature of those elements.
- ***Source Transfer Schemes:*** In the event of an undervoltage, a transfer signal may be generated to transfer a load from its normal source to a standby or emergency power source.

The undervoltage elements can be programmed to have a definite time delay characteristic. The definite time curve operates when the voltage drops below the pickup level for a specified period of time. The time delay is adjustable from 0 to 600.00 seconds in steps of 0.01. The undervoltage elements can also be programmed to have an inverse time delay characteristic.

The undervoltage delay setting defines the family of curves shown below.

$$T = \frac{D}{\left(1 - \frac{V}{V_{pickup}}\right)} \quad \textbf{(EQ 5.20)}$$

where: T = operating time
D = undervoltage delay setting (D = 0.00 operates instantaneously)
V = secondary voltage applied to the relay
V_{pickup} = pickup level

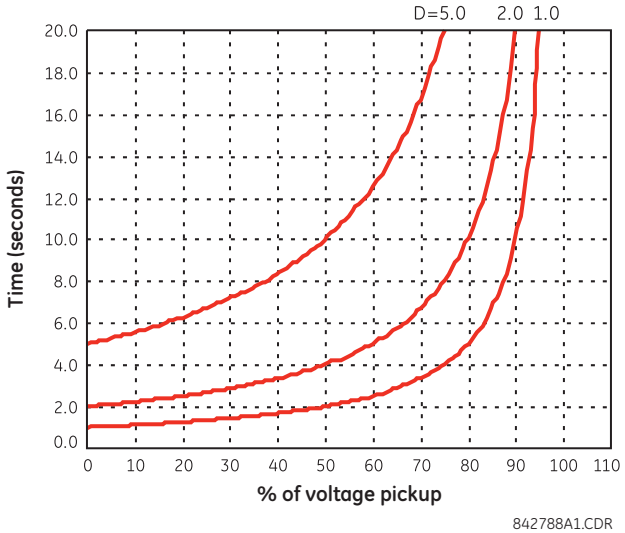

Figure 5–77: INVERSE TIME UNDERVOLTAGE CURVES

NOTE

At 0% of pickup, the operating time equals the **UNDERVOLTAGE DELAY** setting.

b) PHASE UNDERVOLTAGE (ANSI 27P, IEC PTUV)

PATH: SETTINGS ⇨⇩ GROUPED ELEMENTS ⇨ SETTING GROUP 1(6) ⇨⇩ VOLTAGE ELEMENTS ⇨ PHASE UNDERVOLTAGE1(3)

■ PHASE ■ UNDERVOLTAGE1		PHASE UV1 FUNCTION: Disabled	*Range: Disabled, Enabled*
	MESSAGE	PHASE UV1 SIGNAL SOURCE: SRC 1	*Range: SRC 1, SRC 2, SRC 3, SRC 4, SRC 5, SRC 6*
	MESSAGE	PHASE UV1 MODE: Phase to Ground	*Range: Phase to Ground, Phase to Phase*
	MESSAGE	PHASE UV1 PICKUP: 1.000 pu	*Range: 0.000 to 3.000 pu in steps of 0.001*
	MESSAGE	PHASE UV1 CURVE: Definite Time	*Range: Definite Time, Inverse Time*
	MESSAGE	PHASE UV1 DELAY: 1.00 s	*Range: 0.00 to 600.00 s in steps of 0.01*
	MESSAGE	PHASE UV1 MINIMUM VOLTAGE: 0.100 pu	*Range: 0.000 to 3.000 pu in steps of 0.001*
	MESSAGE	PHASE UV1 BLOCK: Off	*Range: FlexLogic operand*
	MESSAGE	PHASE UV1 TARGET: Self-reset	*Range: Self-reset, Latched, Disabled*
	MESSAGE	PHASE UV1 EVENTS: Disabled	*Range: Disabled, Enabled*

One element is provided per each VT bank to a maximum of three.

This element may be used to give a desired time-delay operating characteristic versus the applied fundamental voltage (phase-to-ground or phase-to-phase for wye VT connection, or phase-to-phase for delta VT connection) or as a definite time element. The element resets instantaneously if the applied voltage exceeds the dropout voltage. The delay setting selects the minimum operating time of the phase undervoltage. The minimum voltage setting selects the operating voltage below which the element is blocked (a setting of "0" will allow a dead source to be considered a fault condition).

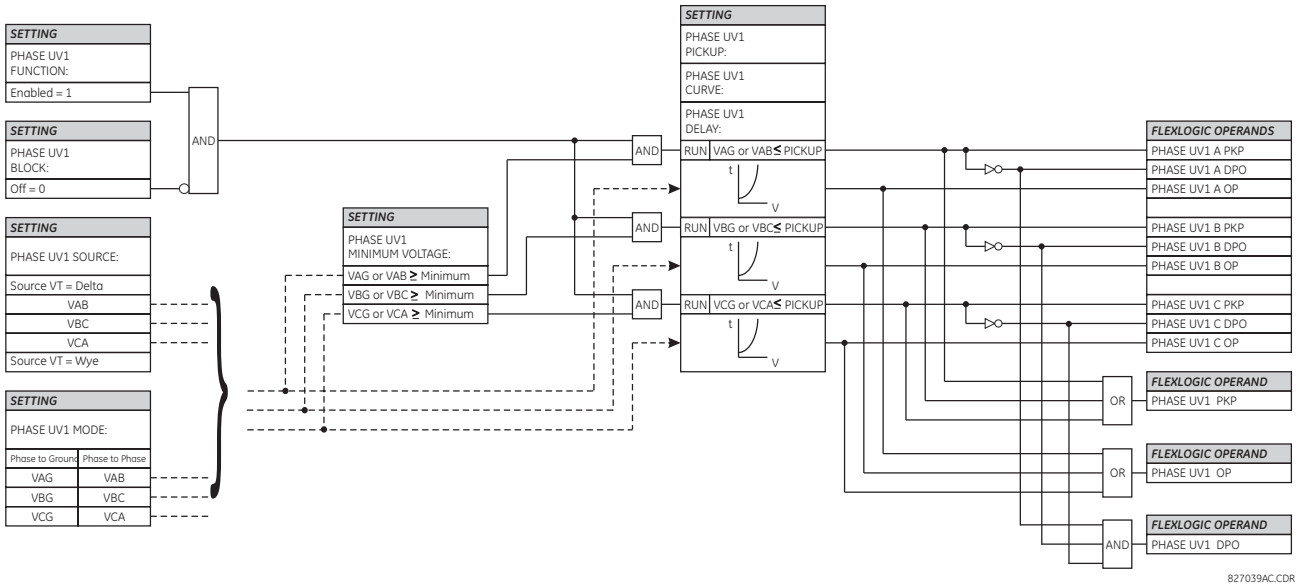

Figure 5–78: PHASE UNDERVOLTAGE1 SCHEME LOGIC

c) PHASE OVERVOLTAGE (ANSI 59P, IEC PTOV)

PATH: SETTINGS ⇨⇩ GROUPED ELEMENTS ⇨ SETTING GROUP 1(6) ⇨⇩ VOLTAGE ELEMENTS ⇨⇩ PHASE OVERVOLTAGE1(3)

■ PHASE ■ OVERVOLTAGE1		PHASE OV1 FUNCTION: Disabled	*Range: Disabled, Enabled*
	MESSAGE	PHASE OV1 SIGNAL SOURCE: SRC 1	*Range: SRC 1, SRC 2, SRC 3, SRC 4, SRC 5, SRC 6*
	MESSAGE	PHASE OV1 PICKUP: 1.000 pu	*Range: 0.000 to 3.000 pu in steps of 0.001*
	MESSAGE	PHASE OV1 PICKUP DELAY: 1.00 s	*Range: 0.00 to 600.00 s in steps of 0.01*
	MESSAGE	PHASE OV1 RESET DELAY: 1.00 s	*Range: 0.00 to 600.00 s in steps of 0.01*
	MESSAGE	PHASE OV1 BLOCK: Off	*Range: FlexLogic Operand*
	MESSAGE	PHASE OV1 TARGET: Self-reset	*Range: Self-reset, Latched, Disabled*
	MESSAGE	PHASE OV1 EVENTS: Disabled	*Range: Disabled, Enabled*

5

There are three phase overvoltage elements available. A phase overvoltage element is used as an instantaneous element with no intentional time delay or as a definite time element. The input voltage is the phase-to-phase voltage, either measured directly from delta-connected VTs or as calculated from phase-to-ground (wye) connected VTs. The specific voltages to be used for each phase are shown below.

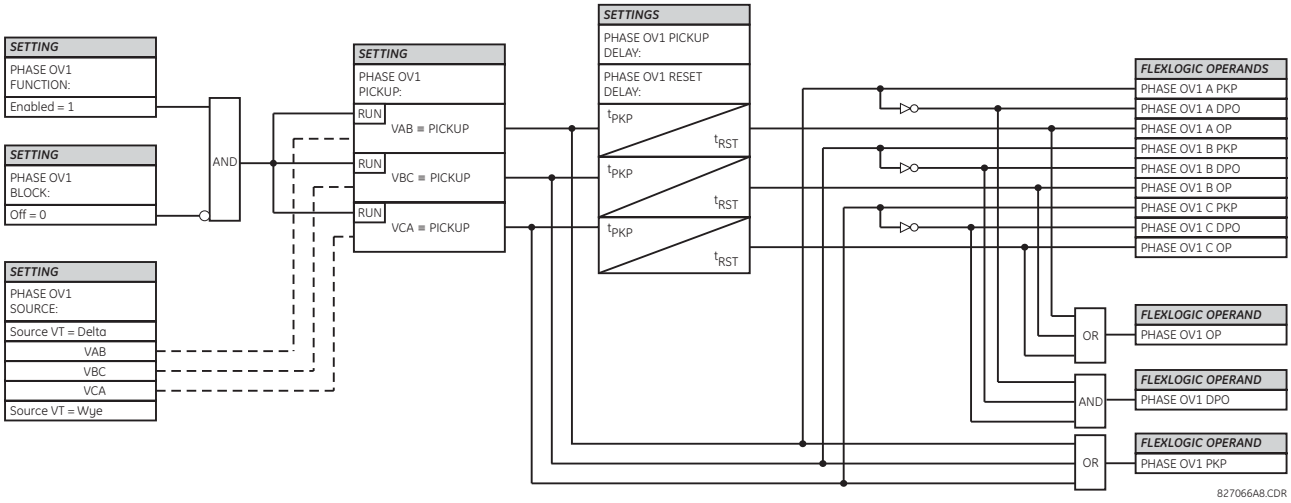

Figure 5–79: PHASE OVERVOLTAGE SCHEME LOGIC

NOTE

If the source VT is wye-connected, then the phase overvoltage pickup condition is $V > \sqrt{3} \times$ Pickup for V_{AB}, V_{BC}, and V_{CA}.

d) NEUTRAL OVERVOLTAGE (ANSI 59N, IEC PTOV)

PATH: SETTINGS ⇨⇩ GROUPED ELEMENTS ⇨ SETTING GROUP 1(6) ⇨⇩ VOLTAGE ELEMENTS ⇨⇩ NEUTRAL OV1(3)

■ NEUTRAL OV1 ■		NEUTRAL OV1 FUNCTION: Disabled	Range: Disabled, Enabled
	MESSAGE	NEUTRAL OV1 SIGNAL SOURCE: SRC 1	Range: SRC 1, SRC 2, SRC 3, SRC 4, SRC 5, SRC 6
	MESSAGE	NEUTRAL OV1 PICKUP: 0.300 pu	Range: 0.000 to 3.000 pu in steps of 0.001
	MESSAGE	NEUTRAL OV1 CURVE: Definite time	Range: Definite time, FlexCurve A, FlexCurve B, FlexCurve C
	MESSAGE	NEUTRAL OV1 PICKUP DELAY: 1.00 s	Range: 0.00 to 600.00 s in steps of 0.01
	MESSAGE	NEUTRAL OV1 RESET DELAY: 1.00 s	Range: 0.00 to 600.00 s in steps of 0.01
	MESSAGE	NEUTRAL OV1 BLOCK: Off	Range: FlexLogic operand
	MESSAGE	NEUTRAL OV1 TARGET: Self-reset	Range: Self-reset, Latched, Disabled
	MESSAGE	NEUTRAL OV1 EVENTS: Disabled	Range: Disabled, Enabled

There are three neutral overvoltage elements available. The neutral overvoltage element can be used to detect asymmetrical system voltage condition due to a ground fault or to the loss of one or two phases of the source. The element responds to the system neutral voltage (3V_0), calculated from the phase voltages. The nominal secondary voltage of the phase voltage channels entered under SETTINGS ⇨⇩ SYSTEM SETUP ⇨ AC INPUTS ⇨⇩ VOLTAGE BANK ⇨ PHASE VT SECONDARY is the p.u. base used when setting the pickup level.

The neutral overvoltage element can provide a time-delayed operating characteristic versus the applied voltage (initialized from FlexCurves A, B, or C) or be used as a definite time element. The **NEUTRAL OV1 PICKUP DELAY** setting applies only if the **NEUTRAL OV1 CURVE** setting is “Definite time”. The source assigned to this element must be configured for a phase VT.

VT errors and normal voltage unbalance must be considered when setting this element. This function requires the VTs to be wye-connected.

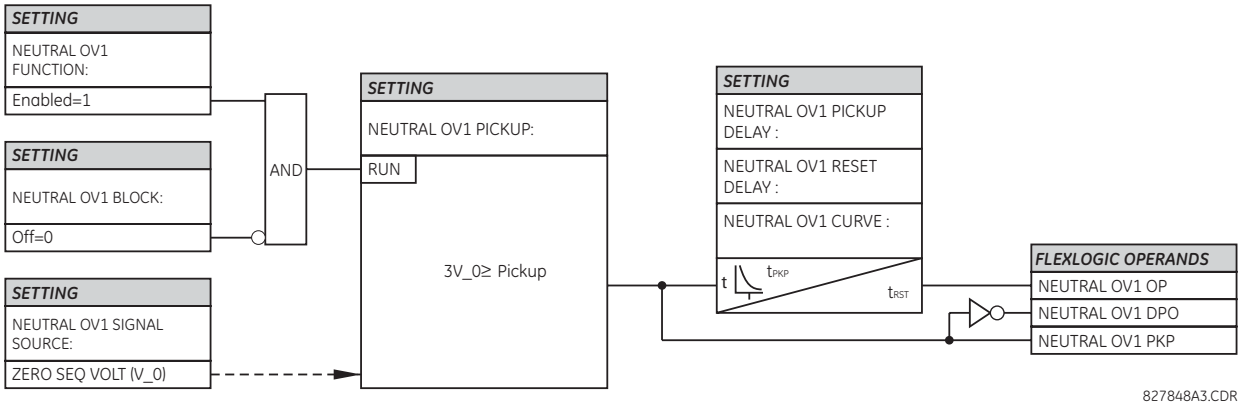

Figure 5–80: NEUTRAL OVERVOLTAGE1 SCHEME LOGIC

e) NEGATIVE-SEQUENCE OVERVOLTAGE(ANSI 59Q, IEC PTOV)

PATH: SETTINGS ⇨⇩ GROUPED ELEMENTS ⇨ SETTING GROUP 1(6) ⇨⇩ VOLTAGE ELEMENTS ⇨⇩ NEG SEQ OV 1(3)

```
■ NEG SEQ OV 1
■
```

	NEG SEQ OV 1 FUNCTION: Disabled	Range: Disabled, Enabled
MESSAGE	NEG SEQ OV 1 SIGNAL SOURCE: SRC 1	Range: SRC 1, SRC 2, SRC 3, SRC 4, SRC 5, SRC 6
MESSAGE	NEG SEQ OV 1 PICKUP: 0.300 pu	Range: 0.000 to 1.250 pu in steps of 0.001
MESSAGE	NEG SEQ OV 1 PICKUP DELAY: 0.50 s	Range: 0.00 to 600.00 s in steps of 0.01
MESSAGE	NEG SEQ OV 1 RESET DELAY: 0.50 s	Range: 0.00 to 600.00 s in steps of 0.01
MESSAGE	NEG SEQ OV 1 BLOCK: Off	Range: FlexLogic operand
MESSAGE	NEG SEQ OV 1 TARGET: Self-reset	Range: Self-reset, Latched, Disabled
MESSAGE	NEG SEQ OV 1 EVENTS: Disabled	Range: Disabled, Enabled

5

There is one negative-sequence overvoltage element available per CT bank, to a maximum of three.

The negative-sequence overvoltage element may be used to detect loss of one or two phases of the source, a reversed phase sequence of voltage, or a non-symmetrical system voltage condition.

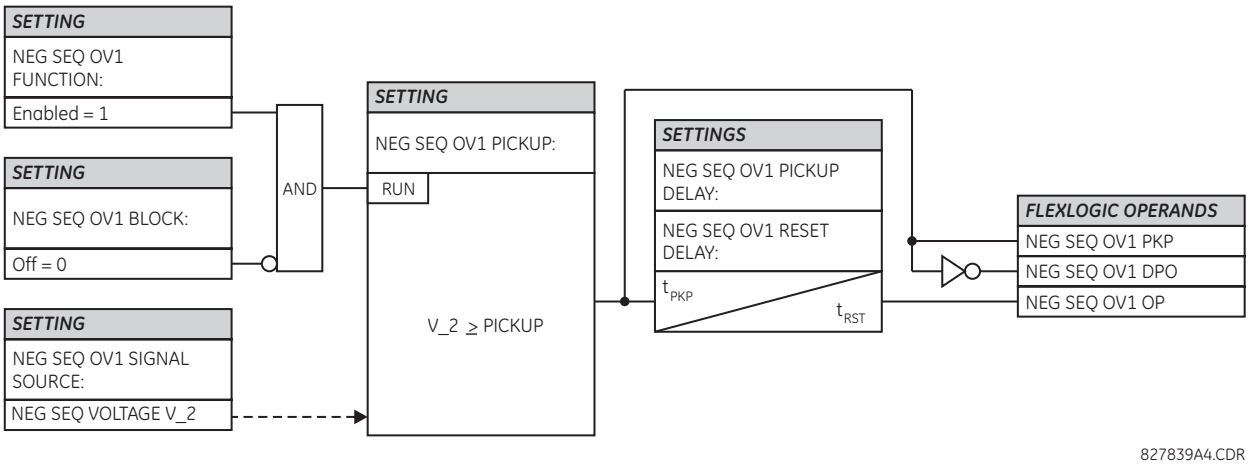

Figure 5–81: NEGATIVE-SEQUENCE OVERVOLTAGE SCHEME LOGIC

f) AUXILIARY OVERVOLTAGE (ANSI 59X, IEC PTOV)

PATH: SETTINGS ⇨⇩ GROUPED ELEMENTS ⇨ SETTING GROUP 1(6) ⇨⇩ VOLTAGE ELEMENTS ⇨⇩ AUXILIARY OV1(3)

■ AUXILIARY OV1 ■		AUX OV1 FUNCTION: Disabled	*Range: Disabled, Enabled*
	MESSAGE	AUX OV1 SIGNAL SOURCE: SRC 1	*Range: SRC 1, SRC 2, SRC 3, SRC 4, SRC 5, SRC 6*
	MESSAGE	AUX OV1 PICKUP: 0.300 pu	*Range: 0.000 to 3.000 pu in steps of 0.001*
	MESSAGE	AUX OV1 PICKUP DELAY: 1.00 s	*Range: 0.00 to 600.00 s in steps of 0.01*
	MESSAGE	AUX OV1 RESET DELAY: 1.00 s	*Range: 0.00 to 600.00 s in steps of 0.01*
	MESSAGE	AUX OV1 BLOCK: Off	*Range: FlexLogic operand*
	MESSAGE	AUX OV1 TARGET: Self-reset	*Range: Self-reset, Latched, Disabled*
	MESSAGE	AUX OV1 EVENTS: Disabled	*Range: Disabled, Enabled*

The C70 contains one auxiliary overvoltage element for each VT bank. This element is intended for monitoring overvoltage conditions of the auxiliary voltage. The nominal secondary voltage of the auxiliary voltage channel entered under **SYSTEM SETUP ⇨ AC INPUTS ⇩⇨ VOLTAGE BANK X5 ⇩⇨ AUXILIARY VT X5 SECONDARY** is the per-unit (pu) base used when setting the pickup level.

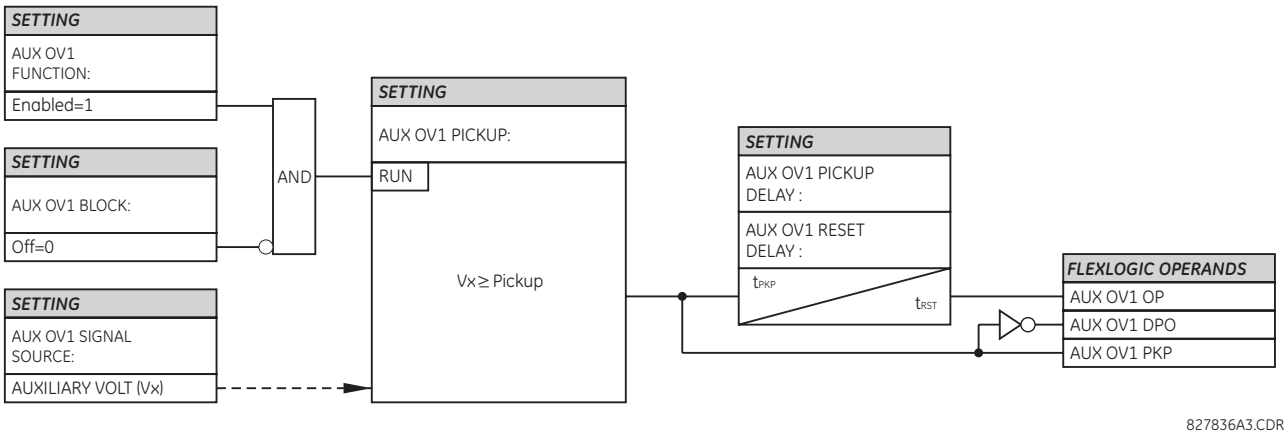

Figure 5–82: AUXILIARY OVERVOLTAGE SCHEME LOGIC

g) BANK VOLTAGE DIFFERENTIAL (ANSI 87V, IEC PDIF)

PATH: SETTINGS ⇨⇩ GROUPED ELEMENTS ⇨ SETTING GROUP 1(6) ⇨⇩ VOLTAGE ELEMENTS ⇨⇩ VOLTAGE DIFFERENTIAL 1(3)

	VOLTAGE DIF 1 FUNCTION: Disabled	Range: Disabled, Enabled
MESSAGE	VOLTAGE DIF 1 BUS SOURCE: SRC 1	Range: SRC 1, SRC 2, SRC 3, SRC 4, SRC 5, SRC 6
MESSAGE	VOLTAGE DIF 1 TAP SOURCE: SRC 1	Range: SRC 1, SRC 2, SRC 3, SRC 4, SRC 5, SRC 6
MESSAGE	VOLTAGE DIF 1 BANK GROUND: Grounded	Range: Grounded, Ungrounded
MESSAGE	VOLTAGE DIF 1 MATCH FACTOR A: 2.0000	Range: 0.5000 to 2000.0000 in steps of 0.0001
MESSAGE	VOLTAGE DIF 1 MATCH FACTOR B: 2.0000	Range: 0.5000 to 2000.0000 in steps of 0.0001
MESSAGE	VOLTAGE DIF 1 MATCH FACTOR C: 2.0000	Range: 0.5000 to 2000.0000 in steps of 0.0001
MESSAGE	VOLTAGE DIF 1 STG 1A PICKUP: 0.010 pu	Range: 0.001 to 1.000 pu in steps of 0.001
MESSAGE	VOLTAGE DIF 1 STG 2A PICKUP: 0.020 pu	Range: 0.001 to 1.000 pu in steps of 0.001
MESSAGE	VOLTAGE DIF 1 STG 3A PICKUP: 0.030 pu	Range: 0.001 to 1.000 pu in steps of 0.001
MESSAGE	VOLTAGE DIF 1 STG 4A PICKUP: 0.040 pu	Range: 0.001 to 1.000 pu in steps of 0.001
MESSAGE	VOLTAGE DIF 1 STG 1B PICKUP: 0.010 pu	Range: 0.001 to 1.000 pu in steps of 0.001
MESSAGE	VOLTAGE DIF 1 STG 2B PICKUP: 0.020 pu	Range: 0.001 to 1.000 pu in steps of 0.001
MESSAGE	VOLTAGE DIF 1 STG 3B PICKUP: 0.030 pu	Range: 0.001 to 1.000 pu in steps of 0.001
MESSAGE	VOLTAGE DIF 1 STG 4B PICKUP: 0.040 pu	Range: 0.001 to 1.000 pu in steps of 0.001
MESSAGE	VOLTAGE DIF 1 STG 1C PICKUP: 0.010 pu	Range: 0.001 to 1.000 pu in steps of 0.001
MESSAGE	VOLTAGE DIF 1 STG 2C PICKUP: 0.020 pu	Range: 0.001 to 1.000 pu in steps of 0.001
MESSAGE	VOLTAGE DIF 1 STG 3C PICKUP: 0.030 pu	Range: 0.001 to 1.000 pu in steps of 0.001
MESSAGE	VOLTAGE DIF 1 STG 4C PICKUP: 0.040 pu	Range: 0.001 to 1.000 pu in steps of 0.001
MESSAGE	VOLTAGE DIF 1 STG 1 PKP DELAY: 30.00 s	Range: 0.00 to 600.00 s in steps of 0.01
MESSAGE	VOLTAGE DIF 1 STG 2 PKP DELAY: 10.00 s	Range: 0.00 to 600.00 s in steps of 0.01

MESSAGE
VOLTAGE DIF 1 STG 3
PKP DELAY: 1.00 s
Range: 0.00 to 600.00 s in steps of 0.01

MESSAGE
VOLTAGE DIF 1 STG 4
PKP DELAY: 0.20 s
Range: 0.00 to 600.00 s in steps of 0.01

MESSAGE
VOLTAGE DIF 1
DPO DELAY: 0.25 s
Range: 0.00 to 600.00 s in steps of 0.01

MESSAGE
VOLT DIF 1 BLK STG1:
Off
Range: FlexLogic operand

MESSAGE
VOLT DIF 1 BLK STG 2:
Off
Range: FlexLogic operand

MESSAGE
VOLT DIF 1 BLK STG 3:
Off
Range: FlexLogic operand

MESSAGE
VOLT DIF 1 BLK STG 4:
Off
Range: FlexLogic operand

MESSAGE
VOLT DIF 1 TARGET:
Self-Reset
Range: Self-reset, Latched, Disabled

MESSAGE
VOLT DIF 1 EVENTS:
Disabled
Range: Disabled, Enabled

Up to three identical voltage differential elements, one per each VT bank configured in hardware, are provided.

The element responds to a differential signal between magnitudes of the bus and tap voltages. The latter is scaled using a matching factor to account for the position of the tap. An automatic setting procedure is available under the **COMMAND** menu to calculate automatically the matching factor when installing the relay or after repairs of the bank.

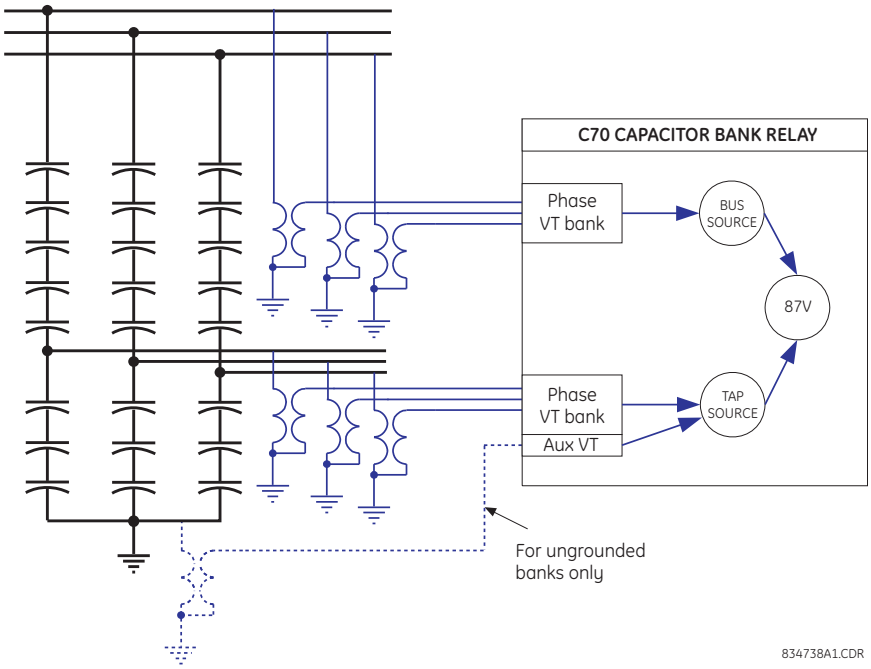

Figure 5–83: VOLTAGE DIFFERENTIAL BASIC CONNECTIONS

The function works with grounded and ungrounded banks. In the latter case, the neutral point voltage must be measured by the relay. For additional information, see the Theory of Operation and Application of Settings chapters.

The following settings are available for each voltage differential element.

- **VOLTAGE DIF 1 BUS SOURCE**: Indicate signal source that signifies the bus voltage of the bank. The function uses this source as reference for pu settings of pickup thresholds, and scales the tap voltages to this signal level. The VT ratio and secondary nominal voltage are set under separate menu. Voltages of this source must be connected in wye for the function to operate.
- **VOLTAGE DIF 1 TAP SOURCE**: Indicate signal source that signifies the tap voltage of the bank. The function scales this voltage to the bus level using the matching factor setting. The matching is performed on primary voltages, or per unit of the bus voltage. The VT ratio and secondary nominal voltage are set under separate menu. Voltages of this source must be connected in wye for the function to operate. If this function is used on ungrounded banks, the tap source must have the neutral point voltage of the bank configured under the auxiliary voltage channel. That auxiliary voltage must be labelled “Vn” under the VT setup menu.
- **VOLTAGE DIF 1 BANK GROUND**: Indicate if the protected bank is grounded or ungrounded. In the latter case, the auxiliary voltage configured under the tap source will be subtracted from the phase voltages of both the bus and tap. This results in the actual voltage drop along the capacitor string, and thus facilitates the voltage differential principle. The relay automatically compensates for different VT ratios and secondary voltages of the neutral point voltage and the bus and tap voltages.
- **VOLTAGE DIF 1 MATCH FACTOR A** to **VOLTAGE DIF 1 MATCH FACTOR C**: This setting specifies the division ratio of the healthy bank, i.e. the ratio between the bus and tap voltages (value greater than 1). The matching factor is applied as multiplier for the primary tap voltage before comparing with the primary bus voltage. Quality of balancing the bank with a given value of this setting can be viewed under **ACTUAL VALUES** menu. An automatic setting procedure is available under the **COMMANDS** menu to calculate the matching factors automatically.
- **VOLTAGE DIF 1 STG 1A PICKUP** to **VOLTAGE DIF 1 STG 4C PICKUP**: These settings specify pickup thresholds for stages 1 through 4 for phases A to C in per-units (pu) of the nominal bus voltage. A value of 1 pu is a product of the nominal secondary voltage and VT ratio of the voltage bank configured under the bus source of this function. Four independent stages are provided for each phase of protection.
- **VOLTAGE DIF 1 STG 1 PKP DELAY**: This setting specifies the pickup time delay, individually per each stage of alarming/tripping. Note that each of the twelve comparators (four stages in three phases) uses an individual timer, but settings for these timers are controlled individually per each stage, not per phase. The timers use a common drop out time delay specified by the next setting.
- **VOLTAGE DIF 1 DPO DELAY**: This setting controls a drop out delay for the operate FlexLogic operands. Note that individual stages apply individually configurable pickup delays, but use this common drop out delay.
- **VOLT DIF 1 BLK STG 1** to **VOLT DIF 1 BLK STG 4**: These inputs are used to block the function on a per stage basis when required. At minimum this function shall be blocked when the bank is off-line, or else it will operate unnecessarily. Either breaker position or undercurrent indication via any available instantaneous function, or a combination, may be used for blocking. The VT fuse fail condition from both the bus and tap VT should also be considered. Note that when unblocked, the function becomes operational after five cycles of intentional delay.

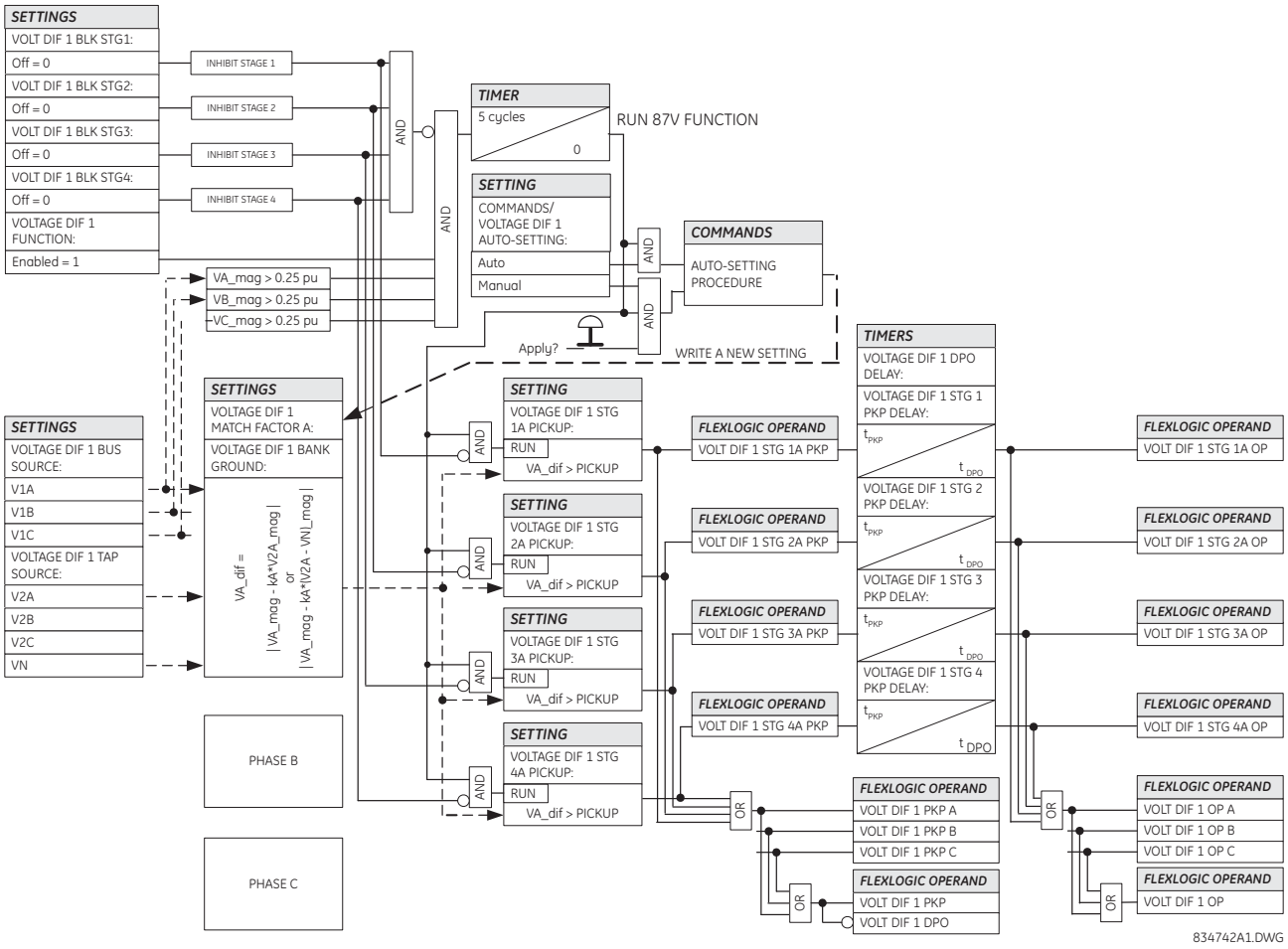

Figure 5–84: VOLTAGE DIFFERENTIAL SCHEME LOGIC

h) BANK PHASE OVERVOLTAGE (ANSI 59B, IEC PTOV)

PATH: SETTINGS ⇨⇩ GROUPED... ⇨ SETTING GROUP 1(6) ⇨⇩ VOLTAGE... ⇨⇩ BANK OVERVOLTAGE ⇨ BANK OVERVOLTAGE 1(3)

■ BANK OVERVOLTAGE 1 ■		BANK OV 1 FUNCTION: Disabled	*Range: Disabled, Enabled*
	MESSAGE	BANK OV 1 BUS SOURCE: SRC 1	*Range: SRC 1, SRC 2, SRC 3, SRC 4, SRC 5, SRC 6*
	MESSAGE	BANK OV 1 NTRL SOURCE: SRC 1	*Range: SRC 1, SRC 2, SRC 3, SRC 4, SRC 5, SRC 6*
	MESSAGE	BANK OV 1 BANK GROUND: Grounded	*Range: Grounded, Ungrounded, Ungr w/o Vn*
	MESSAGE	BANK OV 1 CURVE: FlexCurve A	*Range: FlexCurve A, FlexCurve B, FlexCurve C, FlexCurve D*
	MESSAGE	BANK OV 1 CURVE TIME MULTIPLIER: 1.00	*Range: 1.00 to 10.00 in steps of 0.01*
	MESSAGE	BANK OV 1 STG 1A PICKUP: 1.050 pu	*Range: 0.800 to 2.000 pu in steps of 0.001*

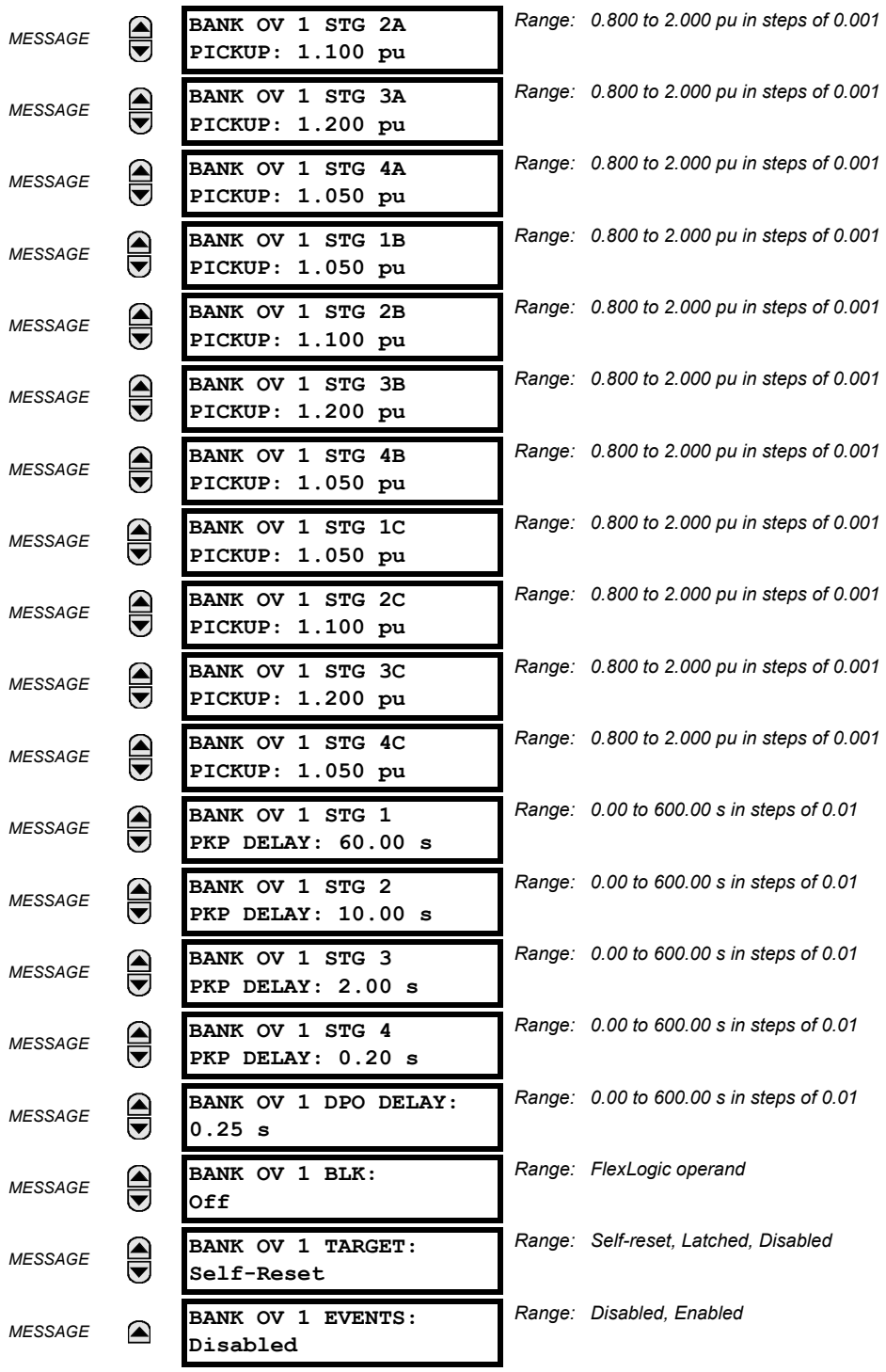

Up to three identical bank overvoltage elements, one per each VT bank configured in hardware, are provided.

The bank phase overvoltage element responds to voltages across the capacitors of the bank. Three stages of definite time operation, and one stage of inverse time operation are provided. Pickup thresholds of this function are adjustable on a per-phase basis. The shape of the inverse time curve is user-programmable (via FlexCurves™) with individual pickup levels and a multiplier common for all three phases. The definite time delays are individually programmable per stage.

The function works with grounded and ungrounded banks. With ungrounded banks, either the neutral point voltage is measured by the relay and used to derive the true bank voltage based on the bus and neutral-point voltages, or a simplified method to provide proper voltage protection is used responding to vector differences between the phase-to-phase voltages.

When fed from wye-connected VTs, thus function responds to phase-to-ground voltages. When fed from delta-connected VTs, this function responds to the vector difference between the phase-to-phase voltages.

The function responds to true RMS voltages to account for effects of harmonics (harmonics impacting losses in the capacitor, harmonics increasing peak values in the voltages compared with the filtered fundamental frequency magnitudes).

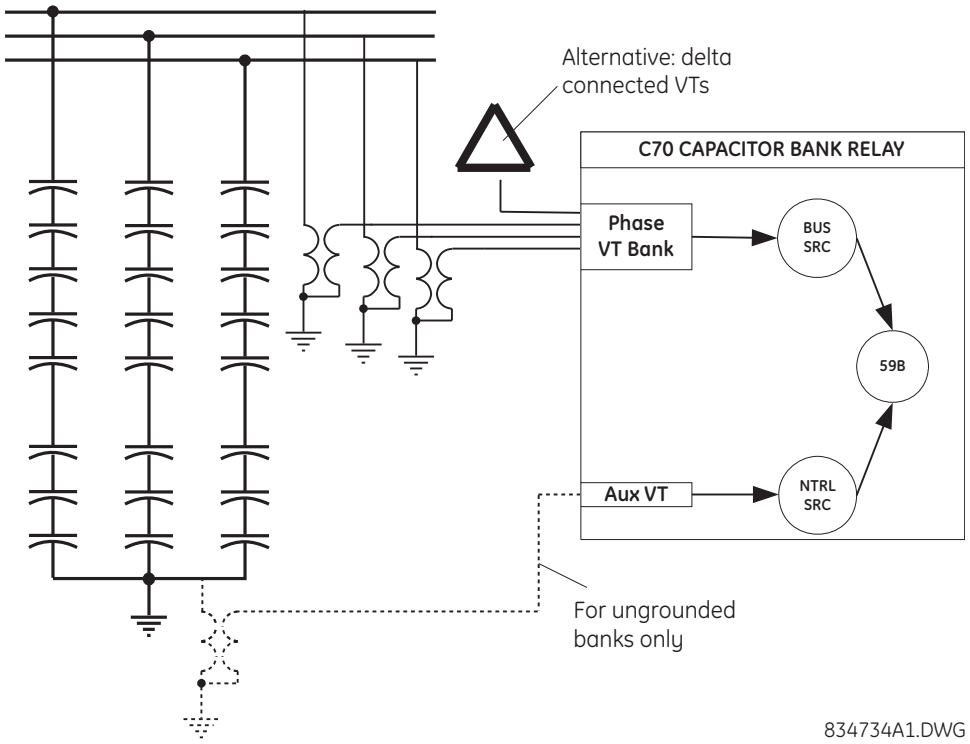

Figure 5–85: BANK OVERVOLTAGE BASIC CONNECTIONS

For more information, see the Theory of Operation and Application of Settings chapters. The following settings are available for each bank phase overvoltage element.

- **BANK OV 1 BUS SOURCE**: This setting indicates the signal source that signifies the bus voltage of the capacitor bank. The function uses this source as reference for per-unit (pu) settings of the pickup thresholds. The VT ratio and secondary nominal voltage are set under the **SETTINGS ⇨⇩ SYSTEM SETUP ⇨ AC INPUTS ⇨⇩ VOLTAGE BANK** menu.
- **BANK OV 1 NTRL SOURCE**: This setting indicates the signal source that signifies the neutral-point voltage of the bank. The auxiliary voltage channel of this source is used, and must be labelled “Vn” under the VT setup menu. The neutral point voltage is used only when the function is applied to an ungrounded bank, to derive the true voltage drop across the capacitors. The VT ratio and secondary nominal voltage are set under the **SETTINGS ⇨⇩ SYSTEM SETUP ⇨ AC INPUTS ⇨⇩ VOLTAGE BANK** menu.
- **BANK OV 1 BANK GROUND**: This setting indicates if the protected bank is grounded, ungrounded with the neutral point voltage measured, and ungrounded without the neutral point voltage. The relay automatically compensates for potentially different VT ratios and secondary voltages of the bus and neutral point voltages. The following table explains the operating signals of the function based on the input signals available to the relay.

VT CONNECTION	BANK CONFIGURATION		
	GROUNDED	UNGROUNDED	UNGROUNDED W/O VN
Wye	Vop_A = VA Vop_B = VB Vop_C = VC	Vop_A = VA – VX Vop_B = VB – VX Vop_C = VC – VX	Vop_A = (VCA – VAB) / 3 Vop_B = (VAB – VBC) / 3 Vop_C = (VBC – VCA) / 3
Delta	Vop_A = (VCA – VAB) / 3 Vop_B = (VAB – VBC) / 3 Vop_C = (VBC – VCA) / 3		

- **BANK OV 1 CURVE**: This setting specifies a FlexCurve used by the fourth inverse time stage of this function. FlexCurves are user-programmable on a point-by-point basis. This function applies a common curve shape in all three phases. However, the curve is specified as time versus multiple of pickup. With three individually programmable pickup values per phase one accommodates possible differences between individual phases of the bank even though a common curve shape is used.

  Implementation of the inverse-time stage is based on the concept of a *virtual disk* emulating electromechanical relays. When above the pickup level, the function integrates towards the trip level at the rate dictated by the curve at a given multiple of pickup. When activated but with the operating signal below the pickup, the function integrates down toward a complete reset. This mode of operation assures dependability in situations when the voltage oscillates and causes stress to the protected capacitor in repetitive cycles each lasting too short to expire a straight timer. As a result of this implementation, the shape of the curve below multiple of pickup of 1 is important as it controls the speed of reset of a partially energized function.
- **BANK OV 1 STG 1A PICKUP** to **BANK OV 1 STG 3C PICKUP**: These settings specify pickup thresholds for stages 1 through 3 in phases A through C in per-units (pu) of the nominal phase-to-ground bus voltage. A value of 1 pu is a product of the nominal secondary voltage and VT ratio of the voltage bank configured under the bus source of this function. With a delta VT configuration, a value of 1 pu is a product of the nominal secondary voltage and VT ratio divided by $\sqrt{3}$. Three independent stages of definite-time operation are provided for each phase of the bank.
- **BANK OV 1 STG 4A PICKUP** to **BANK OV 1 STG 4C PICKUP**: These settings specify pickup thresholds for the inverse time stage 4 in phase A through C in per-units (pu) of the nominal phase-to-ground bus voltage. With a wye VT configuration, a value of 1 pu is a product of the nominal secondary voltage and VT ratio of the voltage bank configured under the bus source of this function. With a delta VT configuration, a value of 1 pu is a product of the nominal secondary voltage and VT ratio divided by $\sqrt{3}$. The inverse time stage uses a user-programmable FlexCurve selected by the **BANK OV 1 CURVE** setting.
- **BANK OV 1 STG 1 PKP DELAY** to **BANK OV 1 STG 3 PKP DELAY**: These settings specify the pickup time delays for each definite time stage of alarming/tripping. Note that each of the nine comparators (three definite-time stages in three phases) uses an individual timer, but settings for these timers are controlled individually per each stage, not per phase. The timers use a common dropout time delay specified by the **BANK OV 1 DPO DELAY** setting.
- **BANK OV 1 DPO DELAY**: This setting controls a dropout delay for the operate FlexLogic operands. Note that individual stages apply individually configurable pickup delays, but use this common dropout delay.
- **BANK OV 1 BLK**: This input is used to block the function when required; in particular, when the bank is offline.

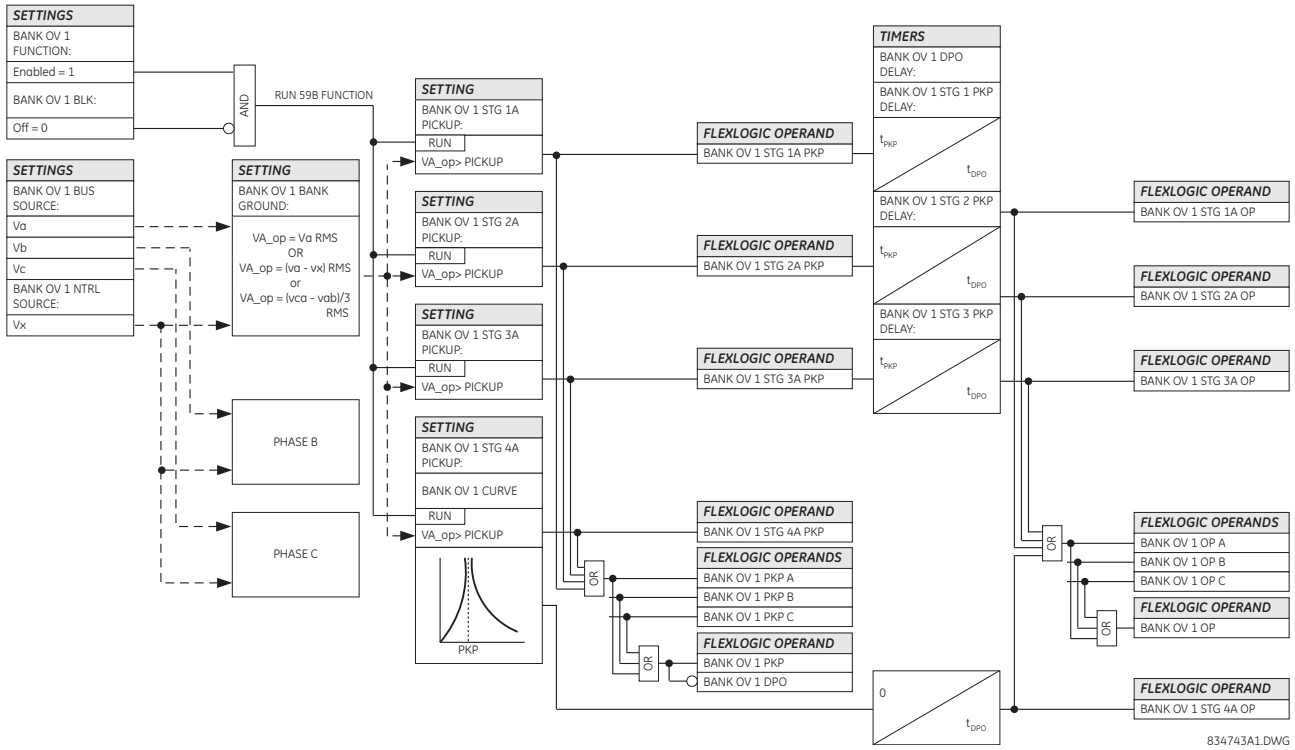

Figure 5–86: BANK PHASE OVERVOLTAGE SCHEME LOGIC

i) NEUTRAL VOLTAGE UNBALANCE (ANSI 59NU, IEC PVCB/PTOV)

PATH: SETTINGS ⇨⇩ GROUPED ELEMENTS ⇨ SETTING GROUP 1(6) ⇨⇩ VOLTAGE ELEMENTS ⇨⇩ NEUTRAL VOLTAGE UNBALANCE 1(3)

■ NEUTRAL VOLTAGE ■ UNBALANCE 1		NTRL VOL UNBAL 1 FUNCTION: Disabled	*Range: Disabled, Enabled*
	MESSAGE	NTRL VOL UNBAL 1 NTRL SOURCE: SRC 1	*Range: SRC 1, SRC 2, SRC 3, SRC 4, SRC 5, SRC 6*
	MESSAGE	NTRL VOL UNBAL 1 BUS SOURCE: SRC 1	*Range: SRC 1, SRC 2, SRC 3, SRC 4, SRC 5, SRC 6*
	MESSAGE	NTRL VOL UNBAL 1 BUS 3V0: Calculated	*Range: Calculated, Measured*
	MESSAGE	NTRL VOL UNBAL 1 GROUND: VT (ungrnd)	*Range: VT (ungrnd), CTxR (grnd)*
	MESSAGE	NTRL VOL UNBAL 1 AB RATIO: 1.0000	*Range: 0.7500 to 1.2500 in steps of 0.0001*
	MESSAGE	NTRL VOL UNBAL 1 AC RATIO: 1.0000	*Range: 0.7500 to 1.2500 in steps of 0.0001*
	MESSAGE	NTRL VOL UNBAL 1 STG 1 PKP: 0.010 pu	*Range: 0.001 to 1.000 pu in steps of 0.001*
	MESSAGE	NTRL VOL UNBAL 1 STG 1 SLOPE: 0.0%	*Range: 0.0 to 10.0% in steps of 0.1*
	MESSAGE	NTRL VOL UNBAL 1 STG 2 PKP: 0.020 pu	*Range: 0.001 to 1.000 pu in steps of 0.001*

MESSAGE
NTRL VOL UNBAL 1
STG 2 SLOPE: 0.0%
Range: 0.0 to 10.0% in steps of 0.1

MESSAGE
NTRL VOL UNBAL 1
STG 3 PKP: 0.020 pu
Range: 0.001 to 1.000 pu in steps of 0.001

MESSAGE
NTRL VOL UNBAL 1
STG 3 SLOPE: 5.0%
Range: 0.0 to 10.0% in steps of 0.1

MESSAGE
NTRL VOL UNBAL 1
STG 4 PKP: 0.030 pu
Range: 0.001 to 1.000 pu in steps of 0.001

MESSAGE
NTRL VOL UNBAL 1
STG 4 SLOPE: 5.0%
Range: 0.0 to 10.0% in steps of 0.1

MESSAGE
NTRL VOL UNBAL 1 STG
1 PKP DELAY: 30.00 s
Range: 0.00 to 600.00 s in steps of 0.01

MESSAGE
NTRL VOL UNBAL 1 STG
2 PKP DELAY: 10.00 s
Range: 0.00 to 600.00 s in steps of 0.01

MESSAGE
NTRL VOL UNBAL 1 STG
3 PKP DELAY: 1.00 s
Range: 0.00 to 600.00 s in steps of 0.01

MESSAGE
NTRL VOL UNBAL 1 STG
4 PKP DELAY: 0.20 s
Range: 0.00 to 600.00 s in steps of 0.01

MESSAGE
NTRL VOL UNBAL 1
DPO DELAY: 0.25 s
Range: 0.00 to 600.00 s in steps of 0.01

MESSAGE
NTRL VOL 1 BLK STG1:
Off
Range: FlexLogic operand

MESSAGE
NTRL VOL 1 BLK STG2:
Off
Range: FlexLogic operand

MESSAGE
NTRL VOL 1 BLK STG3:
Off
Range: FlexLogic operand

MESSAGE
NTRL VOL 1 BLK STG4:
Off
Range: FlexLogic operand

MESSAGE
NTRL VOL UNBAL 1
TARGET: Self-Reset
Range: Self-reset, Latched, Disabled

MESSAGE
NTRL VOL UNBAL 1
EVENTS: Disabled
Range: Disabled, Enabled

Up to three identical neutral voltage unbalance elements, one per each VT bank configured in hardware, are provided.

The element responds to the voltage signal at the neutral point of the capacitor bank. The operating equations are properly compensated for both the system unbalance such as during close-in external faults, and the inherent bank unbalance. The bus zero-sequence voltage required for compensation of the system unbalance can be measured internally to the relay from phase voltages, or delivered as a 3V0 signal from an open-corner-delta VT via an auxiliary voltage channel of the relay.

Compensation for the inherent unbalance of the protected bank uses the B and C phase voltages, and thus this function requires wye connected phase VTs. The inherent unbalance is zeroed out using ratios of the reactances between the reference phase A, and the two other phases. An automatic setting procedure is available under the **COMMAND** menu to calculate the compensating factors automatically when installing the relay, or after repairs of the bank.

To enhance performance under large system unbalances when the neutral-point and system zero-sequence voltages may become significant, a concept of a restraint is introduced. The slope of the operating characteristic is user adjustable, and if desired, it can be effectively removed yielding a straight compensated overvoltage function.

For additional information, see the Theory of Operation and Application of Settings chapters.

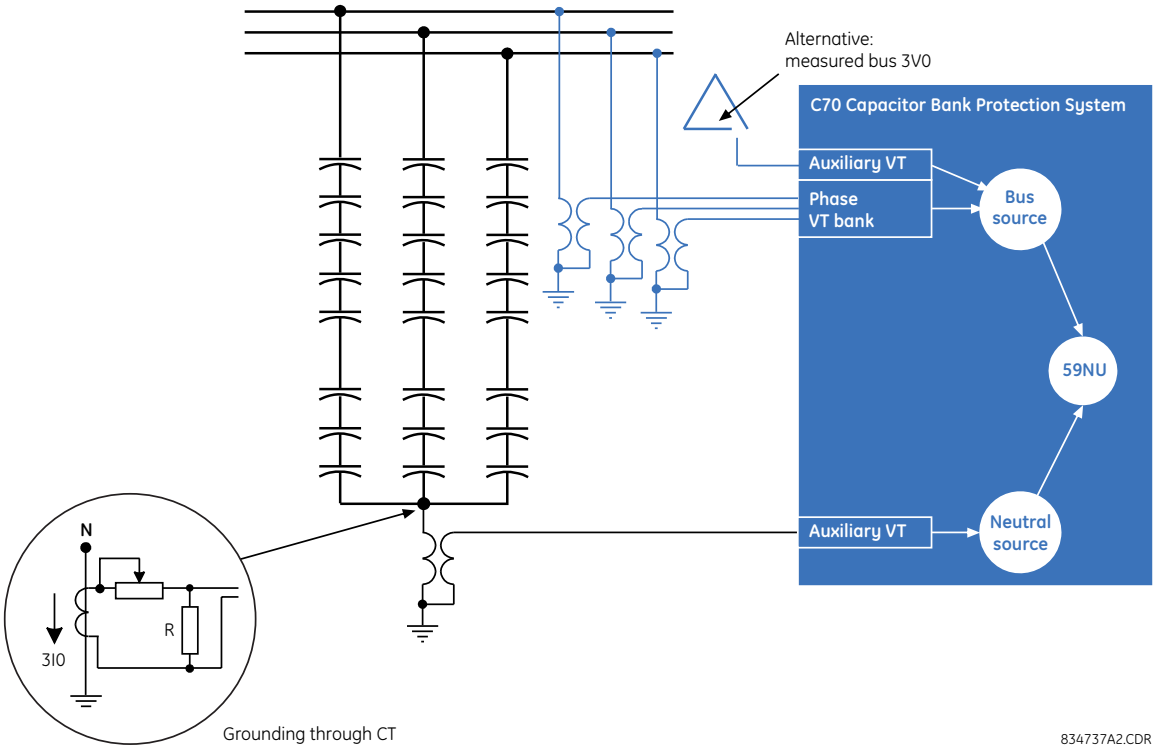

Figure 5–87: NEUTRAL VOLTAGE UNBALANCE BASIC CONNECTION

The following settings are available for all three neutral voltage unbalance elements.

- **NTRL VOL UNBAL 1 NTRL SOURCE**: Indicate signal source that signifies the neutral-point voltage of the protected bank. This single-phase voltage is to be configured under the auxiliary VT channel. The VT ratio and secondary nominal voltage are set under separate menu. Nominal voltage of this auxiliary channel becomes a unit (1 pu) for the pickup settings of this function.
- **NTRL VOL UNBAL 1 BUS SOURCE**: Indicate signal source that signifies the bus voltages of the bank. This source must have the phase voltages configured in order to facilitate compensation for the inherent unbalance of the bank. The zero-sequence voltage required for system unbalance compensation can be derived from the phase voltages, or delivered to the relay from an external source, typically a broken-delta VT (the selection is controlled by the next setting of this function). In the latter case, the 3V0 signal is expected and must be wired and configured under the auxiliary voltage channel of this source. This 3V0 voltage must be labelled as “Vn” under the VT configuration. The VT ratio and secondary nominal voltage are set under separate menu. Phase voltages of this source must be connected in wye for the function to operate. The function uses several voltages potentially produced by VTs of different ratios and nominal secondary values. The relay scales all the signals automatically for meaningful calculations.
- **NTRL VOL UNBAL 1 BUS 3V0**: This setting specifies the source of the bus zero-sequence voltage required for system unbalance compensation. If set to “Calculated”, the relay would derive the zero-sequence voltage as a vector sum of the three phase voltages and will run the function if voltage in all three phases is greater than 0.25 pu. If set to “Measured”, the relay expects the 3V0 signal (not a V0) to be wired to the relay under the auxiliary channel of the bus source, and labelled as “Vn”. In this case, the voltage check to run this function is not performed.
- **NTRL VOL UNBAL 1 GROUND**: This setting selects the grounding arrangement of the bank. For ungrounded banks it should be set to “VT (ungrnd)”. When the bank neutral is solidly grounded through the CT with a resistor in the CT secondary, then this setting should be chosen as “CTxR (grnd)”.

  When the “CTxR (grnd)” value is selected, the measured bank neutral point voltage is shifted by 90° lagging to compensate for the angular difference between the bus neutral voltage and the voltage derived from the bank neutral point current. The value of resistor *R* should be chosen so the voltage measured by the auxiliary input of the relay matches bus *V*0 during system faults (for example, an SLG fault at the bus). This is accomplished by the following condition:

$$\frac{3V0_{BUS}}{n_{BUS\_VT}} - \frac{3I0_{NTRL} \times R \times n_{NTRL\_VT}}{n_{NTRL\_CT} \times n_{BUS\_VT}} = 0 \quad \text{(EQ 5.21)}$$

The terms used in the above equation are defined as follows.

- $V0_{BUS}$ is the bus primary zero-sequence voltage during system fault.
- $3I0_{NTRL}$ is the primary current in the bank neutral during system fault.
- n_{BUS_VT} is the bus VT ratio set in the source selected by the **NTRL VOL UNBAL 1 BUS SOURCE** setting.
- n_{NTRL_VT} is a neutral point VT ratio set in the source selected by the **NTRL VOL UNBAL 1 NTRL SOURCE** setting. If R can be chosen precisely, then n_{NTRL_VT} can be set same as n_{BUS_VT}. If R cannot be chosen precisely, then n_{NTRL_VT} is used to match zero-sequence voltage as per the equation above.
- n_{NTRL_CT} is the CT ratio in the bank neutral.

- **NTRL VOL UNBAL 1 AB RATIO**: This setting compensates for the bank inherent unbalance. Physically this value is a ratio of the reactance in phase A divided by the reactance in phase B. Auto-setting procedure is available under the Commands menu to calculate this value automatically. When tuning this setting manually, after bank repairs, this ratio shall be increased or decreased from the nominal value of 1.00 depending on whether the A or B phase got affected by failures or repairs and whether a given reactance increased or decreased as a result of the failure or repair. This setting should only be used when **NTRL VOL UNBAL 1 BUS 3V0** setting is set as “Calculated”.
- **NTRL VOL UNBAL 1 AC RATIO**: This setting compensates for the bank inherent unbalance. Physically this value is a ratio of the reactance in phase A divided by the reactance in phase C. Auto-setting procedure is available under the Commands menu to calculate this value automatically. When tuning this setting manually, after bank repairs, this ratio shall be increased or decreased from the nominal value of 1.00 depending on whether the A or C phase got affected by failures or repairs and whether a given reactance increased or decreased as a result of the failure or repair. This setting should only be used when **NTRL VOL UNBAL 1 BUS 3V0** setting is set as “Calculated”.
- **NTRL VOL UNBAL 1 STG 1 PKP** to **NTRL VOL UNBAL 1 STG 1 PKP**: These settings specify pickup thresholds for stages 1 through 4 of the function in per-units (pu) of the nominal value of the neutral-point VT (the auxiliary channel of the neutral source).
- **NTRL VOL UNBAL 1 STG 1 SLOPE** to **NTRL VOL UNBAL 1 STG 4 SLOPE**: These settings specify the slopes of the operating characteristic. Neglecting compensation for the inherent bank unbalance, the operating signal is a vectorial difference between the neutral point voltage and the zero-sequence bus voltage. Therefore, the optimum restraining signal is a vectorial sum of the two signals. During external ground faults, the two voltages are approximately in phase generating a large restraining signal being twice the zero-sequence voltage at the bus. A slope of few percent is typically sufficient to provide good security under large system unbalances. If a given stage is used with a time delay longer than the expected external fault duration, the slope may be reduced or eliminated. In general, the slope can be understood as a adaptive threshold, and the user is provided with three ways to control sensitivity and security: pickup, time delay and slope. See the Application of Settings chapter for more information.
- **NTRL VOL UNBAL 1 STG 1 PKP DELAY** to **NTRL VOL UNBAL 1 STG 4 PKP DELAY**: These settings specify the pickup time delays for each stage of alarming or tripping. Note that each of the four comparators (four stages) uses an individual pickup timer, but a common drop out time delay as specified by the next setting.
- **NTRL VOL UNBAL 1 DPO DELAY**: This setting controls a drop out delay for the operate FlexLogic operands. Note that individual stages apply individually configurable pickup delays, but use this common drop out delay.
- **NTRL VOL 1 BLK STG1** to **NTRL VOL 1 BLK STG4**: These settings are used to block the function when required on a per-stage basis. At minimum this function shall be blocked when the bank is off-line, or else it will operate unnecessarily during external ground faults and/or natural system unbalance if set sensitive. Either breaker position or undercurrent indication via any available instantaneous overcurrent function, or a combination, may be used for blocking. Note that when unblocked, the function becomes operational after five cycles of intentional delay. Optionally only the sensitive stages are blocked, and one stage set high enough to ride through possible problems is left operational. This stage can be used for abnormal conditions such as a failure of one pole of the breaker to close. The function becomes blocked if all four blocking inputs are asserted. The individual blocking inputs inhibit the associated stages of the function.

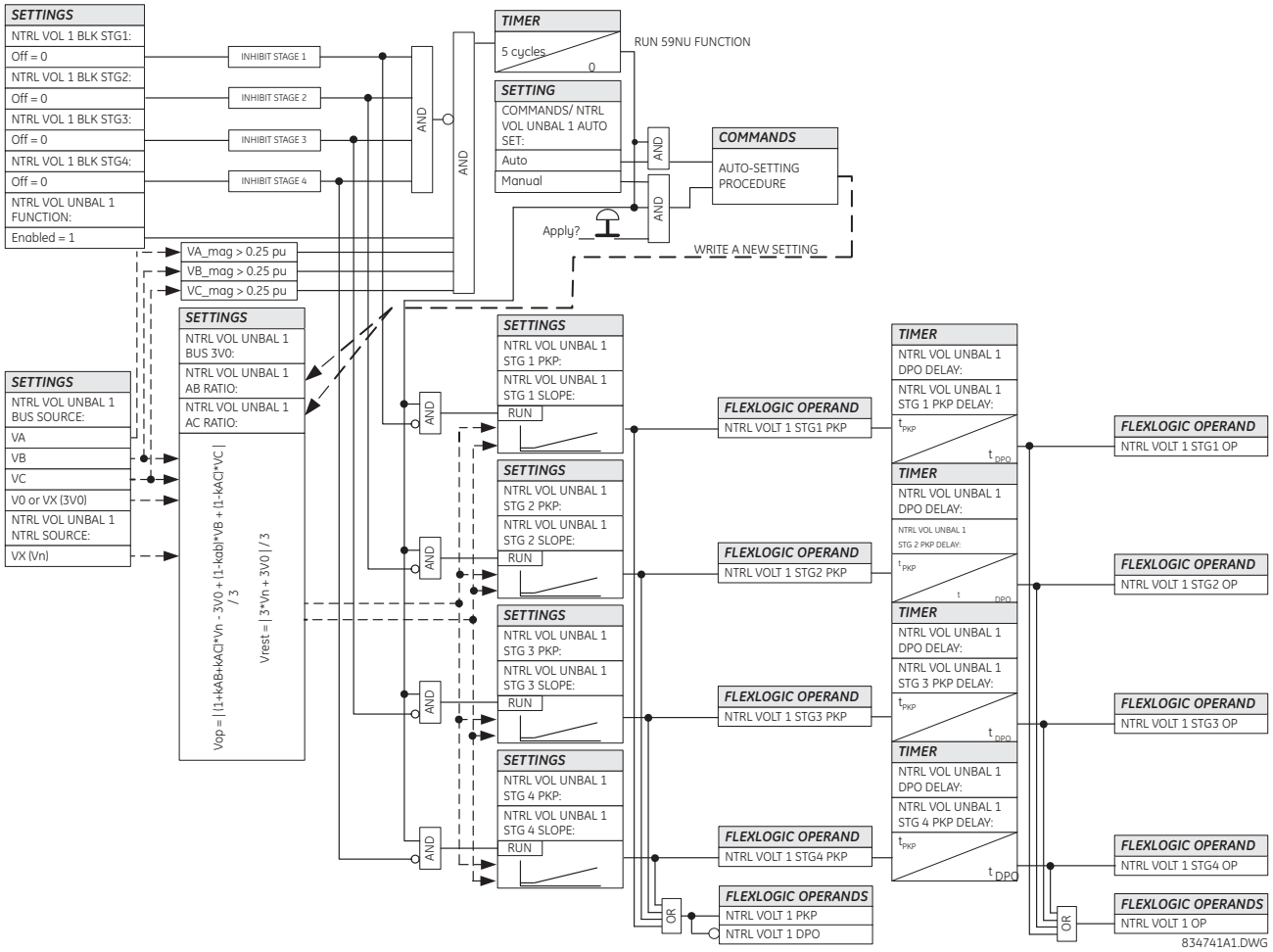

Figure 5–88: NEUTRAL VOLTAGE UNBALANCE LOGIC

5.7.1 OVERVIEW

Control elements are generally used for control rather than protection. See the Introduction to Elements section at the beginning of this chapter for further information.

5.7.2 TRIP BUS

PATH: SETTINGS ⇨⇩ CONTROL ELEMENTS ⇨ TRIP BUS ⇨ TRIP BUS 1(6)

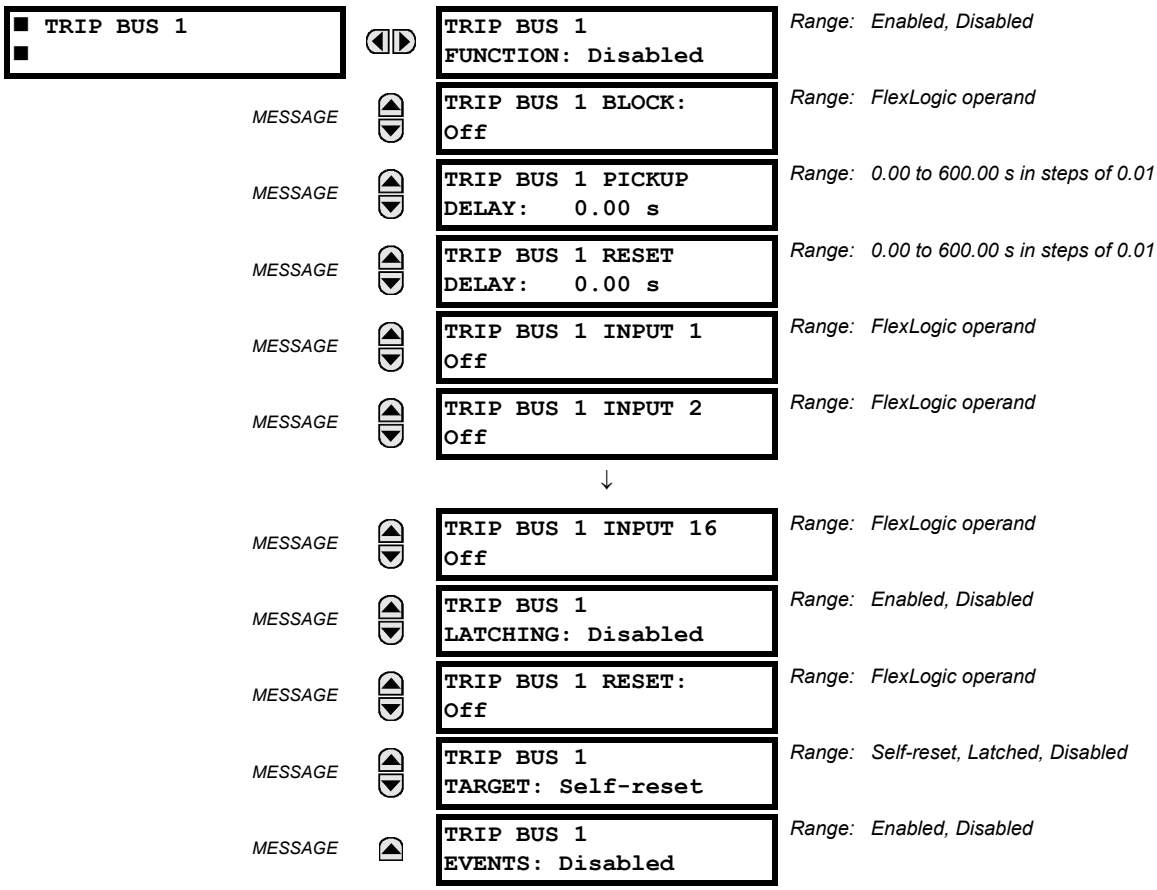

The trip bus element allows aggregating outputs of protection and control elements without using FlexLogic and assigning them a simple and effective manner. Each trip bus can be assigned for either trip or alarm actions. Simple trip conditioning such as latch, delay, and seal-in delay are available.

The easiest way to assign element outputs to a trip bus is through the EnerVista UR Setup software A protection summary is displayed by navigating to a specific protection or control protection element and checking the desired bus box. Once the desired element is selected for a specific bus, a list of element operate-type operands are displayed and can be assigned to a trip bus. If more than one operate-type operand is required, it may be assigned directly from the trip bus menu.

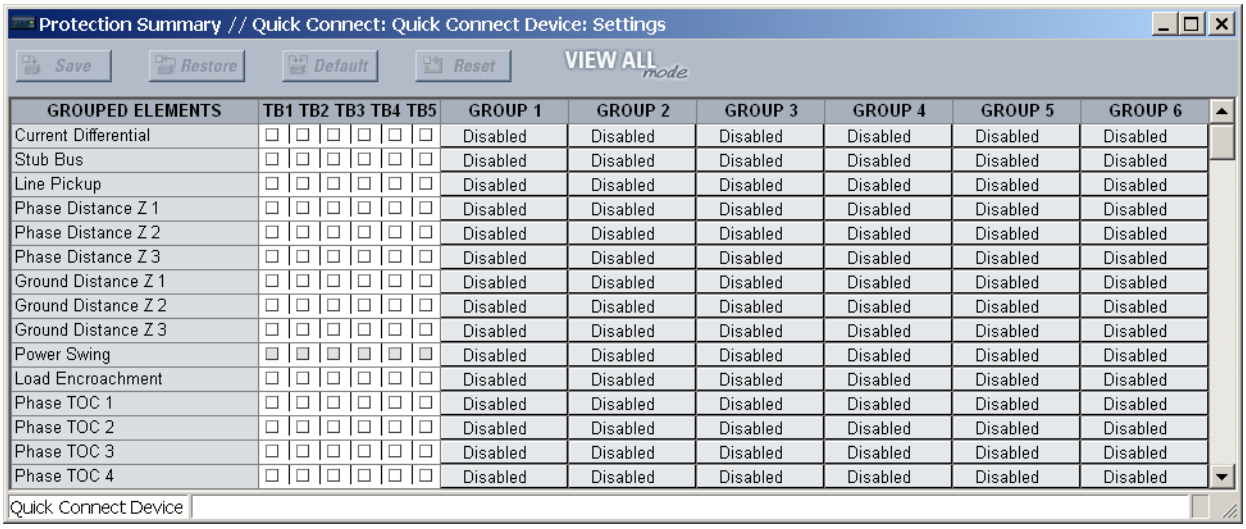

GROUPED ELEMENTS	TB1	TB2	TB3	TB4	TB5	GROUP 1	GROUP 2	GROUP 3	GROUP 4	GROUP 5	GROUP 6
Current Differential	☐	☐	☐	☐	☐	Disabled	Disabled	Disabled	Disabled	Disabled	Disabled
Stub Bus	☐	☐	☐	☐	☐	Disabled	Disabled	Disabled	Disabled	Disabled	Disabled
Line Pickup	☐	☐	☐	☐	☐	Disabled	Disabled	Disabled	Disabled	Disabled	Disabled
Phase Distance Z 1	☐	☐	☐	☐	☐	Disabled	Disabled	Disabled	Disabled	Disabled	Disabled
Phase Distance Z 2	☐	☐	☐	☐	☐	Disabled	Disabled	Disabled	Disabled	Disabled	Disabled
Phase Distance Z 3	☐	☐	☐	☐	☐	Disabled	Disabled	Disabled	Disabled	Disabled	Disabled
Ground Distance Z 1	☐	☐	☐	☐	☐	Disabled	Disabled	Disabled	Disabled	Disabled	Disabled
Ground Distance Z 2	☐	☐	☐	☐	☐	Disabled	Disabled	Disabled	Disabled	Disabled	Disabled
Ground Distance Z 3	☐	☐	☐	☐	☐	Disabled	Disabled	Disabled	Disabled	Disabled	Disabled
Power Swing	☐	☐	☐	☐	☐	Disabled	Disabled	Disabled	Disabled	Disabled	Disabled
Load Encroachment	☐	☐	☐	☐	☐	Disabled	Disabled	Disabled	Disabled	Disabled	Disabled
Phase TOC 1	☐	☐	☐	☐	☐	Disabled	Disabled	Disabled	Disabled	Disabled	Disabled
Phase TOC 2	☐	☐	☐	☐	☐	Disabled	Disabled	Disabled	Disabled	Disabled	Disabled
Phase TOC 3	☐	☐	☐	☐	☐	Disabled	Disabled	Disabled	Disabled	Disabled	Disabled
Phase TOC 4	☐	☐	☐	☐	☐	Disabled	Disabled	Disabled	Disabled	Disabled	Disabled

Figure 5–89: TRIP BUS FIELDS IN THE PROTECTION SUMMARY

The following settings are available.

- **TRIP BUS 1 BLOCK**: The trip bus output is blocked when the operand assigned to this setting is asserted.
- **TRIP BUS 1 PICKUP DELAY**: This setting specifies a time delay to produce an output depending on how output is used.
- **TRIP BUS 1 RESET DELAY**: This setting specifies a time delay to reset an output command. The time delay should be set long enough to allow the breaker or contactor to perform a required action.
- **TRIP BUS 1 INPUT 1** to **TRIP BUS 1 INPUT 16**: These settings select a FlexLogic operand to be assigned as an input to the trip bus.
- **TRIP BUS 1 LATCHING**: This setting enables or disables latching of the trip bus output. This is typically used when lockout is required or user acknowledgement of the relay response is required.
- **TRIP BUS 1 RESET**: The trip bus output is reset when the operand assigned to this setting is asserted. Note that the RESET OP operand is pre-wired to the reset gate of the latch, As such, a reset command the front panel interface or via communications will reset the trip bus output.

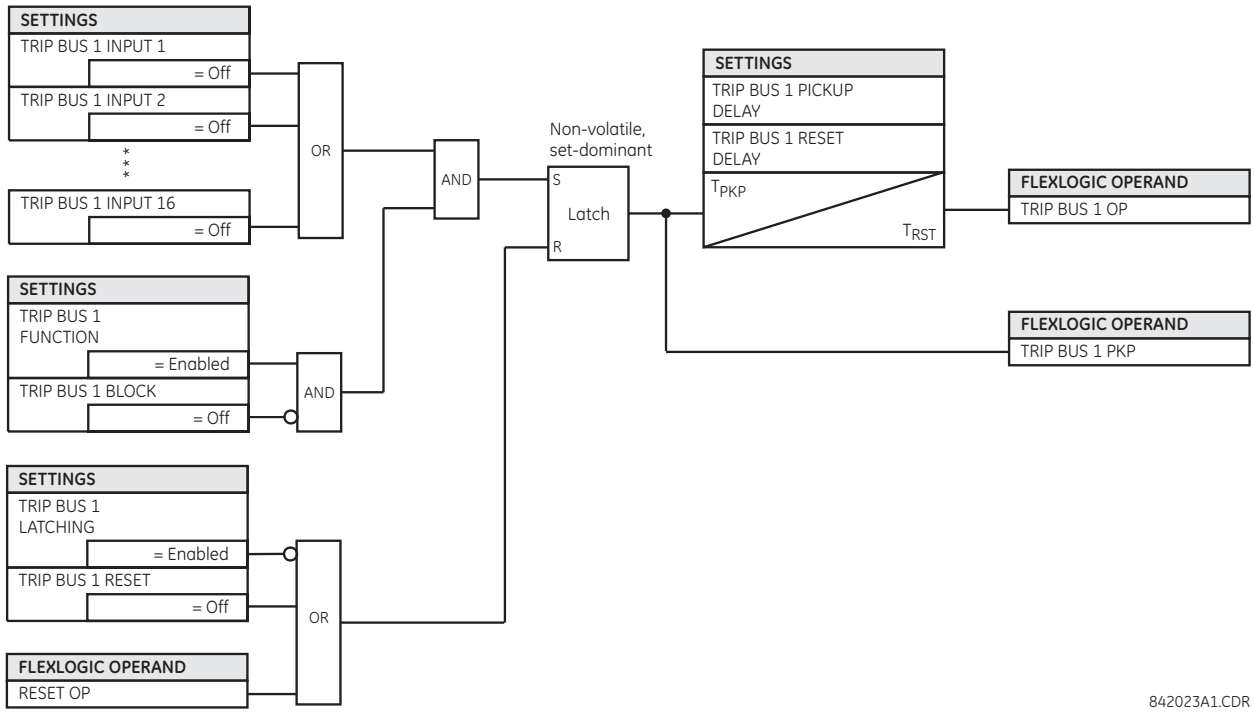

Figure 5–90: TRIP BUS LOGIC

5.7.3 SETTING GROUPS

PATH: SETTINGS ⇨⇩ CONTROL ELEMENTS ⇨ SETTINGS GROUPS

■ SETTING GROUPS ■		SETTING GROUPS FUNCTION: Enabled	Range: Disabled, Enabled
	MESSAGE	SETTING GROUPS BLK: Off	Range: FlexLogic operand
	MESSAGE	GROUP 2 ACTIVATE ON: Off	Range: FlexLogic operand
	MESSAGE	GROUP 3 ACTIVATE ON: Off	Range: FlexLogic operand
		↓	
	MESSAGE	GROUP 6 ACTIVATE ON: Off	Range: FlexLogic operand
	MESSAGE	GROUP 1 NAME:	Range: up to 16 alphanumeric characters
	MESSAGE	GROUP 2 NAME:	Range: up to 16 alphanumeric characters
		↓	
	MESSAGE	GROUP 6 NAME:	Range: up to 16 alphanumeric characters
	MESSAGE	SETTING GROUP EVENTS: Disabled	Range: Disabled, Enabled

The 61850 standard provides for the ability to monitor, edit, and change setting groups in a relay through a series of services operating on Setting Group Control Block values. There is one SGCB in LLN0 in LD1 in the UR as, at present, the other LDs do not support multiple setting groups The default value of **SETTING GROUPS** is Disabled. In order for 61850 and/or UR setting group control to function, the **SETTING GROUPS FUNCTION** must be set to Enabled.

On a setting group change, protection elements are blocked temporarily to allow the relay to re-initialize with the new settings. The duration of the block depends on relay configuration and can last up to four cycles. The actual block duration on the group switching can be verified by the PROTSUPV operand.

The active setting group in the UR is settable from either the value set via a FlexLogic operand in the UR (present practice) or a SelectActiveSG command from a 61850 Client. For both the UR and IEC 61850, the default active setting group is "1".

A 61850 SelectActiveSG command sets one of the internal Non-Volatile flags (61850 SG Level x) that represents the requested Active Setting Group shown as follows:

Table 5–31: ACTIVE SETTING GROUP

SELECTACTIVESG VALUE	FLAG SET
1 (default)	SG Level 1
2	SG Level 2
3	SG Level 3
4	SG Level 4
5	SG Level 4
6	SG Level 6

On power-up or restart, the previously selected 61850 SG Level x is re-instated. Similarly, the input to the setting group control in the UR can be designed with Non-Volatile latches to achieve the same effect.

The setting groups menu controls the activation and deactivation of up to six possible groups of settings in the **GROUPED ELEMENTS** settings menu. The faceplate Settings In Use LEDs indicate which active group (with a non-flashing energized LED) is in service.

The **SETTING GROUPS BLK** setting prevents the active setting group from changing when the FlexLogic parameter is set to "On". This can be useful in applications where it is undesirable to change the settings under certain conditions, such as the breaker being open.

The **GROUP 2 ACTIVATE ON** to **GROUP 6 ACTIVATE ON** settings select a FlexLogic operand which, when set, makes the particular setting group active for use by any grouped element. A priority scheme ensures that only one group is active at a given time – the highest-numbered group that is activated by its **ACTIVATE ON** parameter takes priority over the lower-numbered groups. There is no activate on setting for group 1 (the default active group), because group 1 automatically becomes active if no other group is active.

The **SETTING GROUP 1 NAME** to **SETTING GROUP 6 NAME** settings allows the user to assign a name to each of the six settings groups. Once programmed, this name appears on the second line of the **GROUPED ELEMENTS ⇨ SETTING GROUP 1(6)** menu display.

The relay can be set up via a FlexLogic equation to receive requests to activate or de-activate a particular non-default settings group. The following FlexLogic equation (see the following figure) illustrates requests via remote communications (for example, VIRTUAL INPUT 1 ON) or from a local contact input (for example, CONTACT IP 1 ON) to initiate the use of a particular settings group, and requests from several overcurrent pickup measuring elements to inhibit the use of the particular settings group. The assigned VIRTUAL OUTPUT 1 operand is used to control the “On” state of a particular settings group.

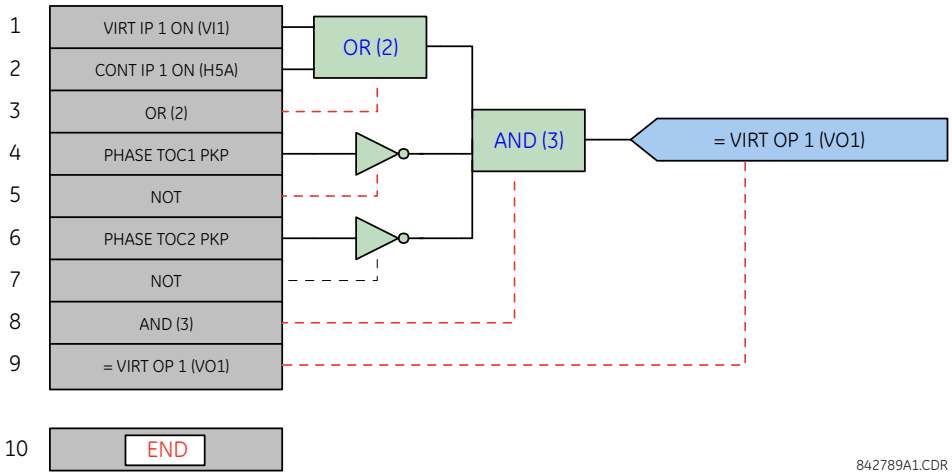

Figure 5–91: EXAMPLE FLEXLOGIC CONTROL OF A SETTINGS GROUP

PATH: SETTINGS ⇨⇩ CONTROL ELEMENTS ⇨⇩ SELECTOR SWITCH ⇨ SELECTOR SWITCH 1(2)

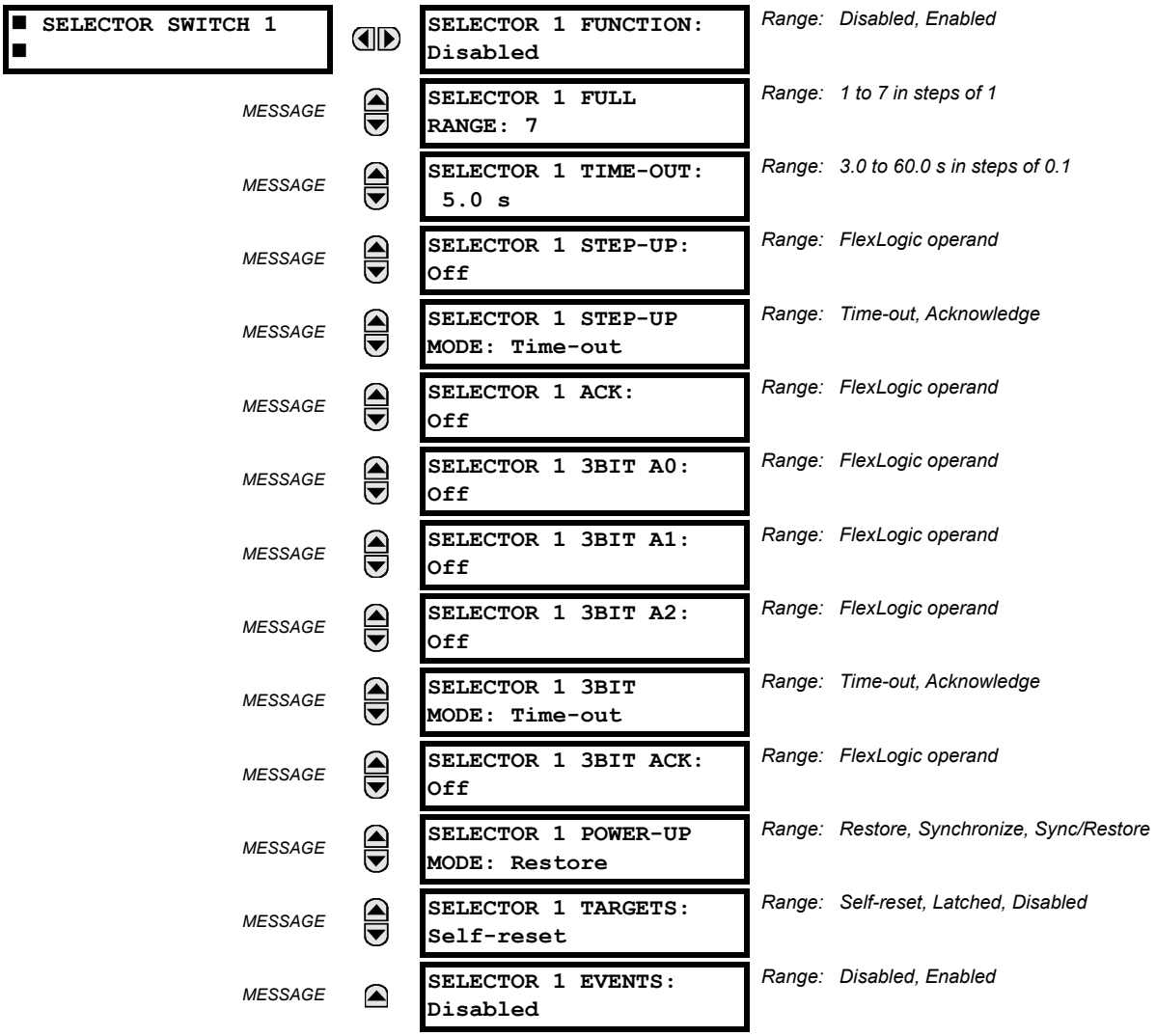

The selector switch element is intended to replace a mechanical selector switch. Typical applications include setting group control or control of multiple logic sub-circuits in user-programmable logic.

The element provides for two control inputs. The step-up control allows stepping through selector position one step at a time with each pulse of the control input, such as a user-programmable pushbutton. The three-bit control input allows setting the selector to the position defined by a three-bit word.

The element allows pre-selecting a new position without applying it. The pre-selected position gets applied either after time-out or upon acknowledgement via separate inputs (user setting). The selector position is stored in non-volatile memory. Upon power-up, either the previous position is restored or the relay synchronizes to the current three-bit word (user setting). Basic alarm functionality alerts the user under abnormal conditions; for example, the three-bit control input being out of range.

A selector switch runs every two power cycles.

- **SELECTOR 1 FULL RANGE**: This setting defines the upper position of the selector. When stepping up through available positions of the selector, the upper position wraps up to the lower position (position 1). When using a direct three-bit control word for programming the selector to a desired position, the change would take place only if the control word is within the range of 1 to the **SELECTOR FULL RANGE**. If the control word is outside the range, an alarm is established by setting the SELECTOR ALARM FlexLogic operand for three seconds.

- **SELECTOR 1 TIME-OUT:** This setting defines the time-out period for the selector. This value is used by the relay in the following two ways. When the **SELECTOR STEP-UP MODE** is "Time-out", the setting specifies the required period of inactivity of the control input after which the pre-selected position is automatically applied. When the **SELECTOR STEP-UP MODE** is "Acknowledge", the setting specifies the period of time for the acknowledging input to appear. The timer is re-started by any activity of the control input. The acknowledging input must come before the **SELECTOR 1 TIME-OUT** timer expires; otherwise, the change will not take place and an alarm will be set.
- **SELECTOR 1 STEP-UP**: This setting specifies a control input for the selector switch. The switch is shifted to a new position at each rising edge of this signal. The position changes incrementally, wrapping up from the last (**SELECTOR 1 FULL RANGE**) to the first (position 1). Consecutive pulses of this control operand must not occur faster than every 50 ms. After each rising edge of the assigned operand, the time-out timer is restarted and the **SELECTOR SWITCH 1: POS Z CHNG INITIATED** target message is displayed, where ***Z*** the pre-selected position. The message is displayed for the time specified by the **FLASH MESSAGE TIME** setting. The pre-selected position is applied after the selector times out ("Time-out" mode), or when the acknowledging signal appears before the element times out ("Acknowledge" mode). When the new position is applied, the relay displays the **SELECTOR SWITCH 1: POSITION Z IN USE** message. Typically, a user-programmable pushbutton is configured as the stepping up control input.
- **SELECTOR 1 STEP-UP MODE**: This setting defines the selector mode of operation. When set to "Time-out", the selector will change its position after a pre-defined period of inactivity at the control input. The change is automatic and does not require any explicit confirmation of the intent to change the selector's position. When set to "Acknowledge", the selector will change its position only after the intent is confirmed through a separate acknowledging signal. If the acknowledging signal does not appear within a pre-defined period of time, the selector does not accept the change and an alarm is established by setting the SELECTOR STP ALARM output FlexLogic operand for three seconds.
- **SELECTOR 1 ACK**: This setting specifies an acknowledging input for the stepping up control input. The pre-selected position is applied on the rising edge of the assigned operand. This setting is active only under "Acknowledge" mode of operation. The acknowledging signal must appear within the time defined by the **SELECTOR 1 TIME-OUT** setting after the last activity of the control input. A user-programmable pushbutton is typically configured as the acknowledging input.
- **SELECTOR 1 3BIT A0, A1, and A2**: These settings specify a three-bit control input of the selector. The three-bit control word pre-selects the position using the following encoding convention:

A2	A1	A0	POSITION
0	0	0	rest
0	0	1	1
0	1	0	2
0	1	1	3
1	0	0	4
1	0	1	5
1	1	0	6
1	1	1	7

The "rest" position (0, 0, 0) does not generate an action and is intended for situations when the device generating the three-bit control word is having a problem. When **SELECTOR 1 3BIT MODE** is "Time-out", the pre-selected position is applied in **SELECTOR 1 TIME-OUT** seconds after the last activity of the three-bit input. When **SELECTOR 1 3BIT MODE** is "Acknowledge", the pre-selected position is applied on the rising edge of the **SELECTOR 1 3BIT ACK** acknowledging input.

The stepping up control input (**SELECTOR 1 STEP-UP**) and the three-bit control inputs (**SELECTOR 1 3BIT A0** through **A2**) lock-out mutually: once the stepping up sequence is initiated, the three-bit control input is inactive; once the three-bit control sequence is initiated, the stepping up input is inactive.

- **SELECTOR 1 3BIT MODE**: This setting defines the selector mode of operation. When set to "Time-out", the selector changes its position after a pre-defined period of inactivity at the control input. The change is automatic and does not require explicit confirmation to change the selector position. When set to "Acknowledge", the selector changes its position only after confirmation via a separate acknowledging signal. If the acknowledging signal does not appear within a pre-defined period of time, the selector rejects the change and an alarm established by invoking the SELECTOR BIT ALARM FlexLogic operand for three seconds.
- **SELECTOR 1 3BIT ACK**: This setting specifies an acknowledging input for the three-bit control input. The pre-selected position is applied on the rising edge of the assigned FlexLogic operand. This setting is active only under the

"Acknowledge" mode of operation. The acknowledging signal must appear within the time defined by the **SELECTOR TIME-OUT** setting after the last activity of the three-bit control inputs. Note that the stepping up control input and three-bit control input have independent acknowledging signals (**SELECTOR 1 ACK** and **SELECTOR 1 3BIT ACK**, accordingly).

- **SELECTOR 1 POWER-UP MODE**: This setting specifies the element behavior on power up of the relay.

  When set to "Restore", the last position of the selector (stored in the non-volatile memory) is restored after powering up the relay. If the position restored from memory is out of range, position 0 (no output operand selected) is applied and an alarm is set (SELECTOR 1 PWR ALARM).

  When set to "Synchronize" selector switch acts as follows. For two power cycles, the selector applies position 0 to the switch and activates SELECTOR 1 PWR ALARM. After two power cycles expire, the selector synchronizes to the position dictated by the three-bit control input. This operation does not wait for time-out or the acknowledging input. When the synchronization attempt is unsuccessful (that is, the three-bit input is not available (0,0,0) or out of range) then the selector switch output is set to position 0 (no output operand selected) and an alarm is established (SELECTOR 1 PWR ALARM).

  The operation of "Synch/Restore" mode is similar to the "Synchronize" mode. The only difference is that after an unsuccessful synchronization attempt, the switch will attempt to restore the position stored in the relay memory. The "Synch/Restore" mode is useful for applications where the selector switch is employed to change the setting group in redundant (two relay) protection schemes.

- **SELECTOR 1 EVENTS**: If enabled, the following events are logged:

EVENT NAME	DESCRIPTION
SELECTOR 1 POS *Z*	Selector 1 changed its position to *Z*.
SELECTOR 1 STP ALARM	The selector position pre-selected via the stepping up control input has not been confirmed before the time out.
SELECTOR 1 BIT ALARM	The selector position pre-selected via the three-bit control input has not been confirmed before the time out.

The following figures illustrate the operation of the selector switch. In these diagrams, “T” represents a time-out setting.

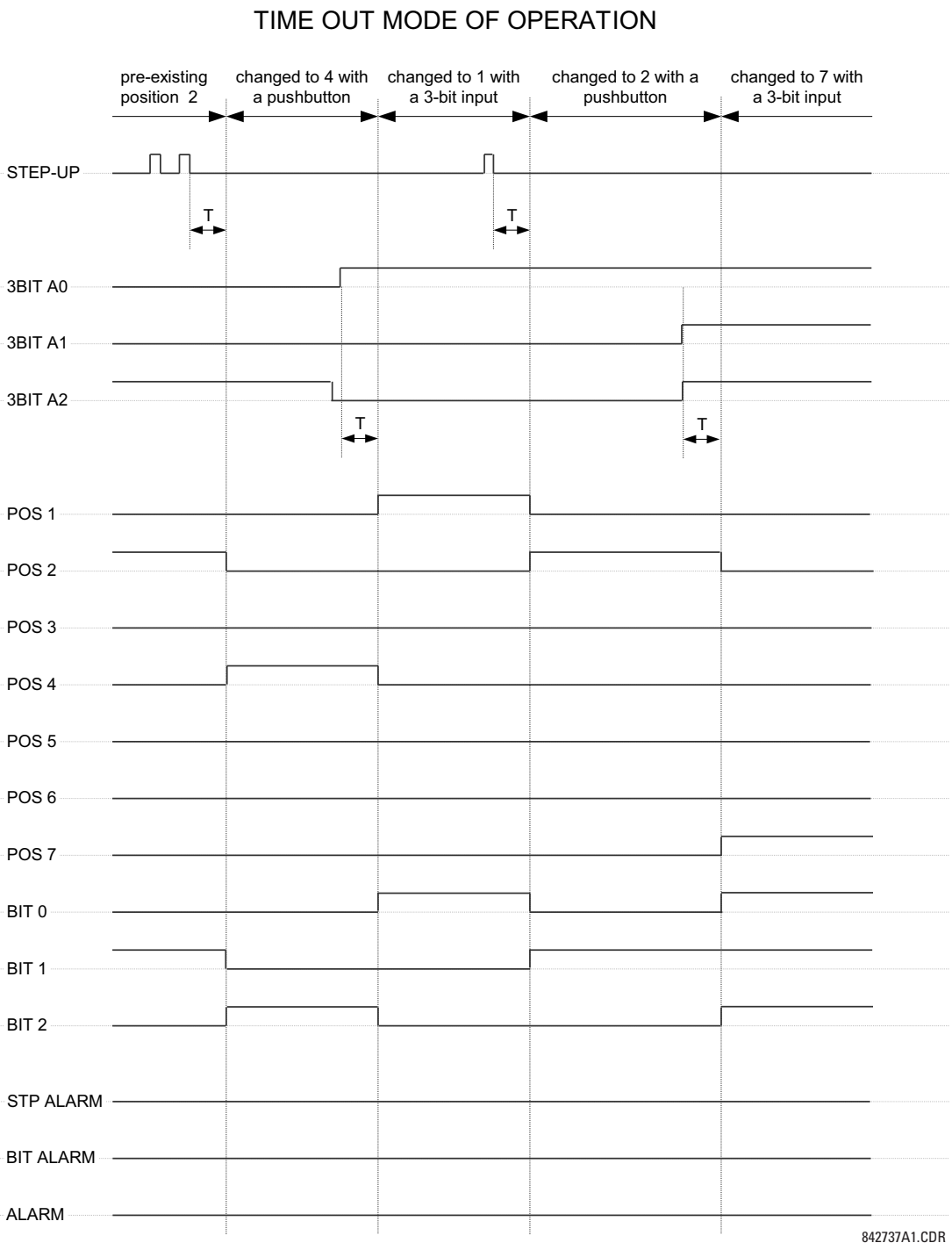

Figure 5–92: TIME-OUT MODE

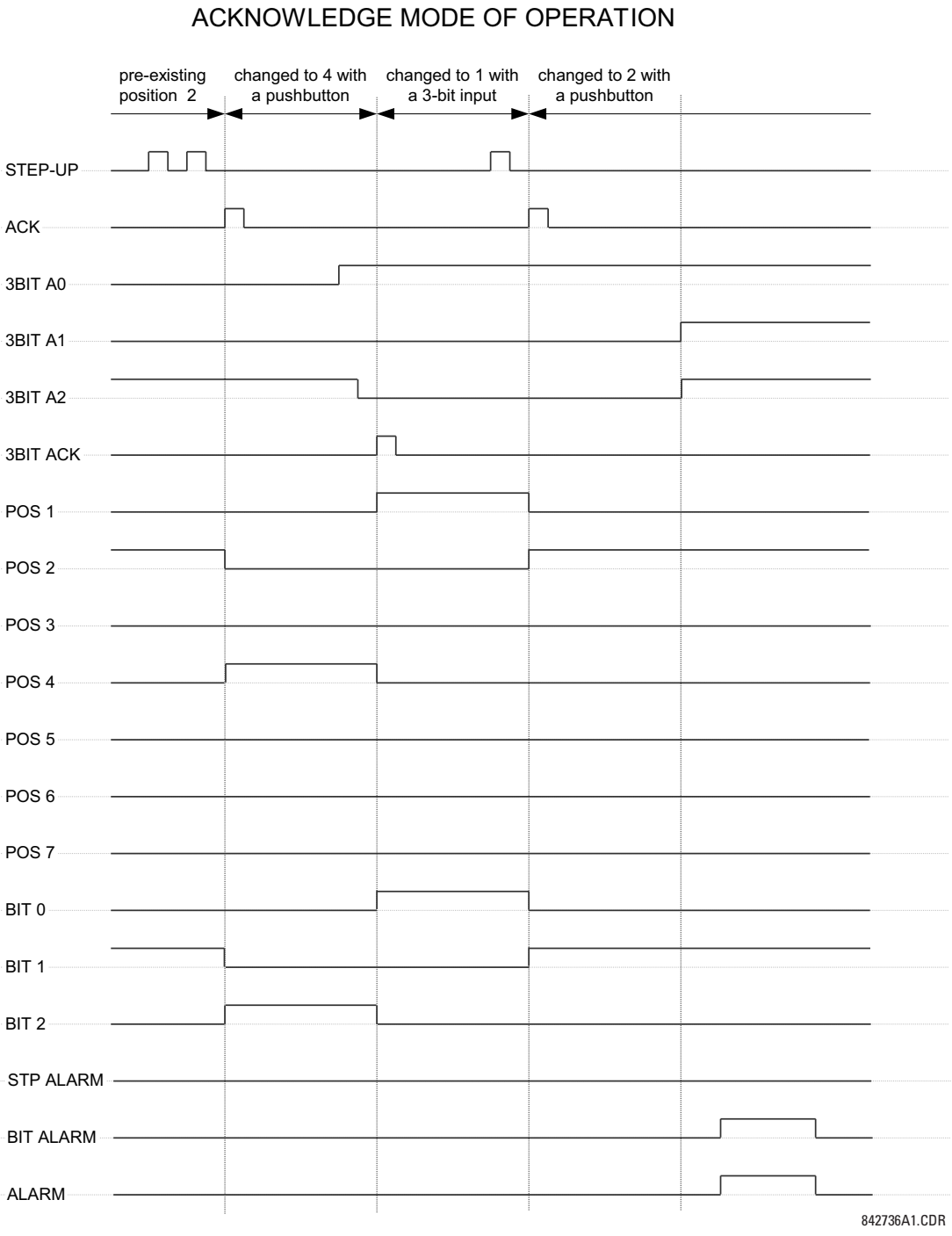

Figure 5–93: ACKNOWLEDGE MODE

Application example

Consider an application where the selector switch is used to control setting groups 1 through 4 in the relay. The setting groups are to be controlled from both user-programmable pushbutton 1 and from an external device via contact inputs 1 through 3. The active setting group shall be available as an encoded three-bit word to the external device and SCADA via output contacts 1 through 3. The pre-selected setting group shall be applied automatically after 5 seconds of inactivity of the control inputs. When the relay powers up, it should synchronize the setting group to the three-bit control input.

Make the following changes to setting group control in the **SETTINGS ⇨⇩ CONTROL ELEMENTS ⇨ SETTING GROUPS** menu:

SETTING GROUPS FUNCTION: "Enabled"
SETTING GROUPS BLK: "Off"
GROUP 2 ACTIVATE ON: "SELECTOR 1 POS 2"
GROUP 3 ACTIVATE ON: "SELECTOR 1 POS 3"
GROUP 4 ACTIVATE ON: "SELECTOR 1 POS 4"
GROUP 5 ACTIVATE ON: "Off"
GROUP 6 ACTIVATE ON: "Off"

Make the following changes to selector switch element in the **SETTINGS ⇨⇩ CONTROL ELEMENTS ⇨⇩ SELECTOR SWITCH ⇨ SELECTOR SWITCH 1** menu to assign control to user programmable pushbutton 1 and contact inputs 1 through 3:

SELECTOR 1 FUNCTION: "Enabled"
SELECTOR 1 FULL-RANGE: "4"
SELECTOR 1 STEP-UP MODE: "Time-out"
SELECTOR 1 TIME-OUT: "5.0 s"
SELECTOR 1 STEP-UP: "PUSHBUTTON 1 ON"
SELECTOR 1 ACK: "Off"
SELECTOR 1 3BIT A0: "CONT IP 1 ON"
SELECTOR 1 3BIT A1: "CONT IP 2 ON"
SELECTOR 1 3BIT A2: "CONT IP 3 ON"
SELECTOR 1 3BIT MODE: "Time-out"
SELECTOR 1 3BIT ACK: "Off"
SELECTOR 1 POWER-UP MODE: "Synchronize"

Now, assign the contact output operation (assume the H6E module) to the selector switch element by making the following changes in the **SETTINGS ⇨⇩ INPUTS/OUTPUTS ⇨⇩ CONTACT OUTPUTS** menu:

OUTPUT H1 OPERATE: "SELECTOR 1 BIT 0"
OUTPUT H2 OPERATE: "SELECTOR 1 BIT 1"
OUTPUT H3 OPERATE: "SELECTOR 1 BIT 2"

Finally, assign configure user-programmable pushbutton 1 by making the following changes in the **SETTINGS ⇨ PRODUCT SETUP ⇨⇩ USER-PROGRAMMABLE PUSHBUTTONS ⇨ USER PUSHBUTTON 1** menu:

PUSHBUTTON 1 FUNCTION: "Self-reset"
PUSHBUTTON 1 DROP-OUT TIME: "0.10 s"

The logic for the selector switch is shown below:

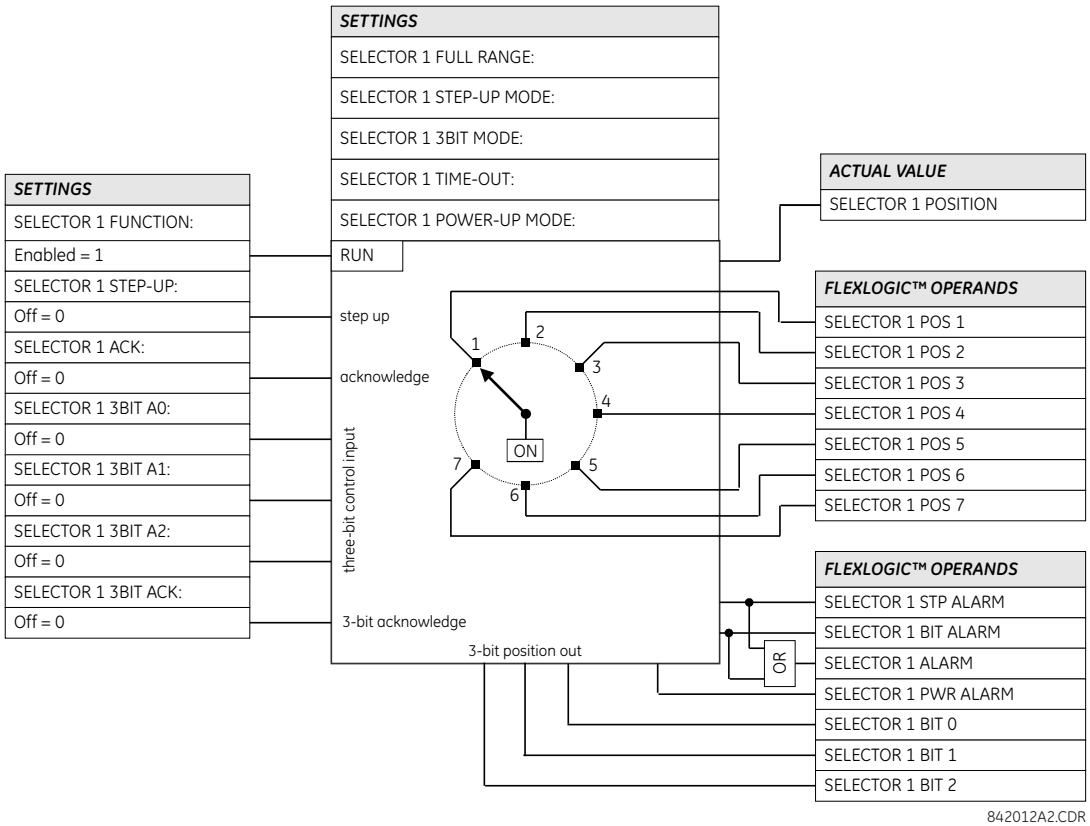

Figure 5–94: SELECTOR SWITCH LOGIC

PATH: SETTINGS ⇨⇩ CONTROL ELEMENTS ⇨⇩ CAPACITOR CONTROL ⇨ CAP 1(4) CONTROL

■ CAP 1 CONTROL ■		CAP 1 CTRL FUNCTION: Disabled	Range: Disabled, Enabled
	MESSAGE	CAP 1 SET REMOTE 1: Off	Range: FlexLogic operand
	MESSAGE	CAP 1 SET REMOTE 2: Off	Range: FlexLogic operand
	MESSAGE	CAP 1 SET LOCAL 1: Off	Range: FlexLogic operand
	MESSAGE	CAP 1 SET LOCAL 2: Off	Range: FlexLogic operand
	MESSAGE	CAP 1 RMT CTRL EN: Off	Range: FlexLogic operand
	MESSAGE	CAP 1 LCL CTRL EN: Off	Range: FlexLogic operand
	MESSAGE	CAP 1 RMT SET AUTO: Off	Range: FlexLogic operand
	MESSAGE	CAP 1 LCL SET AUTO: Off	Range: FlexLogic operand
	MESSAGE	CAP 1 RMT SET MAN: Off	Range: FlexLogic operand
	MESSAGE	CAP 1 LCL SET MAN: Off	Range: FlexLogic operand
	MESSAGE	CAP 1 TRIP 1: Off	Range: FlexLogic operand
	MESSAGE	CAP 1 TRIP 2: Off	Range: FlexLogic operand
	MESSAGE	CAP 1 TRIP 3: Off	Range: FlexLogic operand
	MESSAGE	CAP 1 TRIP 4: Off	Range: FlexLogic operand
	MESSAGE	CAP 1 TRIP 5: Off	Range: FlexLogic operand
	MESSAGE	CAP 1 TRIP 6: Off	Range: FlexLogic operand
	MESSAGE	CAP 1 SWITCH TO MANUAL ON TRIP: Yes	Range: Yes, No
	MESSAGE	CAP 1 AUTO CTRL EN: Off	Range: FlexLogic operand
	MESSAGE	CAP 1 MAN CTRL EN: Off	Range: FlexLogic operand
	MESSAGE	CAP 1 REMOTE OPEN: Off	Range: FlexLogic operand

MESSAGE
CAP 1 LOCAL OPEN: Off
Range: FlexLogic operand

MESSAGE
CAP 1 AUTO OPEN: Off
Range: FlexLogic operand

MESSAGE
CAP 1 BKR OPEN 52b: Off
Range: FlexLogic operand

MESSAGE
CAP 1 TRIP SEAL-IN DELAY: 0.400 s
Range: 0.000 to 60.000 s in steps of 0.001

MESSAGE
CAP 1 REMOTE CLOSE: Off
Range: FlexLogic operand

MESSAGE
CAP 1 LOCAL CLOSE: Off
Range: FlexLogic operand

MESSAGE
CAP 1 AUTO CLOSE: Off
Range: FlexLogic operand

MESSAGE
CAP 1 BKR CLSD 52a: Off
Range: FlexLogic operand

MESSAGE
CAP 1 DISCHARGE DELAY: 300 s
Range: 0 to 3600 s in steps of 1

MESSAGE
CAP 1 CLOSE SEAL-IN DELAY: 0.400 s
Range: 0.000 to 60.000 s in steps of 0.001

MESSAGE
CAP 1 BKR CLOSE BLK: Off
Range: FlexLogic operand

MESSAGE
CAP 1 CLS OVERRIDE: Off
Range: FlexLogic operand

MESSAGE
CAP 1 TARGETS: Self-reset
Range: Self-reset, Latched, Disabled

MESSAGE
CAP 1 EVENTS: Disabled
Range: Disabled, Enabled

The capacitor control element gathers on/off commands from various sources and executes them, while maintaining remote/local and auto/manual control rights. Local control refers to control from the front panel of the relay. Remote control refers to control via communications from outside of the relay, an on-site interface, and/or from an off-site control center. However, there is flexibility to support other configurations.

This element provides a user-programmable time delay that inhibits closing after the bank has been switched out of service until the bank has had time to discharge any trapped charge. If the capacitor were to be closed with trapped charge of opposite polarity from the system voltage at that instant, larger than normal transients would occur. A FlexAnalog value is available to inform the time remaining before the next permissible close operation.

Seal-in is provided to stretch short input commands to lengths suitable for breaker control. An interlock prevents simultaneous trip and close output, which could result in breaker pumping. To prevent a continuous close input from causing reclosing of the breaker following a trip command, the interlock is sealed-in for the duration of any close input.

A provision is provided to force the auto/manual mode to manual on protection operation. This is to prevent the capacitor automatic switching scheme from attempting to close a faulted capacitor. A setting is used to control the automatic switchover to manual upon the protection trip.

The following settings are available for each capacitor control element.

- **CAP 1 CTRL FUNCTION**: This setting is used to enable the element. When disabled, the remote/local latch is forced to local, the auto/manual latch is forced to manual, the trip and close command outputs are forced off, and their seal-in latches and timers are reset.

- **CAP 1 SET REMOTE 1(2)**: Sets one or two FlexLogic operands to select the remote mode. It is expected that one of these settings is programmed to a pushbutton "on" operand. This allows a local operator to hand over control to remote operators. Where appropriate, the other one of these settings may be set to a virtual input. This allows remote operators to grant themselves control rights.
- **CAP 1 SET LOCAL 1(2)**: Similar to previous setting, but selects local mode.
- **CAP 1 RMT CTRL EN**: Selects a FlexLogic operand to enables remote auto/manual and open/close control. It is expected that this will be set to CAP 1 IN REMOTE to obtain the baseline functionality, but variations via FlexLogic are possible. For example, should it be required that remote control is always available, this setting may be set to "On".
- **CAP 1 LCL CTRL EN**: Similar to previous setting, but enables local controls. Expected to be set to CAP 1 IN LOCAL.
- **CAP 1 RMT SET AUTO**: Selects a FlexLogic operand that selects auto mode when remote control is enabled. It is expected that this will be set to a virtual input to enables HMI/SCADA access via one of the supported protocols.
- **CAP 1 LCL SET AUTO**: Similar to previous setting, but expected to be set to a pushbutton "on" operand.
- **CAP 1 RMT SET MAN**: Similar to the **CAP RMT SET AUTO** setting, but selects manual mode.
- **CAP 1 LCL SET MAN**: Similar to the **CAP LCL SET AUTO** setting, but selects manual mode.
- **CAP 1 TRIP 1(6)**: Selects up to six FlexLogic operands to activate the CAP 1 BKR TRIP operand, no matter what control modes prevail. Expected to be set to the appropriate protection element operate operand.
- **CAP 1 SWITCH TO MANUAL ON TRIP**: This setting allows controlling the auto/manual mode when issuing a trip command. If set to "Yes" the element will switch to manual mode upon tripping the bank from protection.
- **CAP 1 AUTO CTRL EN**: Selects a FlexLogic operand to enable automatic open/close control. It is expected that this will be set to CAP 1 IN AUTO to obtain the baseline functionality, but variations are possible.
- **CAP 1 MAN CTRL EN**: Similar to previous setting, but enables manual controls. Expected to be set to CAP 1 IN MAN.
- **CAP 1 REMOTE OPEN**: Selects a FlexLogic operand to activate the CAP 1 BKR TRIP operand when both remote and manual control are enabled. It is expected that this will be set to a virtual input, and that the contact output wired to the capacitor breaker trip coil is set to CAP 1 BKR TRIP.
- **CAP 1 LOCAL OPEN**: Similar to previous setting, but requires both local and manual control to be enabled. Expected to be set to a pushbutton "on" operand.
- **CAP 1 AUTO OPEN**: Similar to previous setting, but requires automatic control to be enabled. Expected to be set to the open command of the voltage regulator either built-in or customer via FlexLogic.
- **CAP 1 BKR OPEN 52b**: Selects a FlexLogic operand that cancels the trip seal-in. Expected to be set to the contact input to which a contact is wired that is closed when the capacitor breaker is open. When both 52a and 52b contacts are used for security, the appropriate filtering logic possibly including discrepancy alarming can be programmed in FlexLogic™, and the resulting virtual output can be configured under this setting.
- **CAP 1 TRIP SEAL-IN DELAY**: Sets a maximum trip seal-in duration for where the **CAP 1 BKR OPEN 52B** setting is not configured or fails to operate.
- **CAP 1 REMOTE CLOSE**: Similar to the **CAP 1 REMOTE OPEN** setting, but closes the breaker.
- **CAP 1 LOCAL CLOSE**: Similar to the **CAP 1 LOCAL OPEN** setting, but closes the breaker.
- **CAP 1 AUTO CLOSE**: Similar to the **CAP 1 AUTO OPEN** setting, but closes the breaker.
- **CAP 1 BKR CLSD 52a**: Similar to the **CAP 1 BKR OPEN 52B** setting, but cancels the close seal-in, and is expected to be set to a contact that is closed when the breaker is closed. The selected operand also triggers the CAP 1 DISCHARGE TIME. When both 52a and 52b contacts are used for security, the appropriate filtering logic possibly including discrepancy alarming can be programmed in FlexLogic, and the resulting virtual output can be configured under this setting.
- **CAP 1 CLOSE SEAL-IN DELAY**: Sets a maximum close seal-in duration for where the **CAP BKR CLOSED 52A** setting is not configured or fails to operate.
- **CAP 1 DISCHARGE TIME**: Sets a time delay that inhibits closing after the bank has been switched out-of-service (the **CAP BKR CLOSE 52A** setting goes low or trip command terminates) until the bank has had time to discharge any trapped charge. The correct value for this setting depends on the specifics of the capacitor installation.

- **CAP 1 BKR CLOSE BLK**: Selects a FlexLogic operand that triggers the CAP 1 BKR CLOSE interlock logic. Its signal is expected to originate from capacitor breaker trips external to the relay, and thus not otherwise able to block relay closing (for example, from the opposite group's capacitor protection).
- **CAP 1 CLS OVERRIDE**: Selects a FlexLogic operand that overrides all inhibits for the breaker close command and allows the CLOSE command to be issued from any source as per the logic diagram.

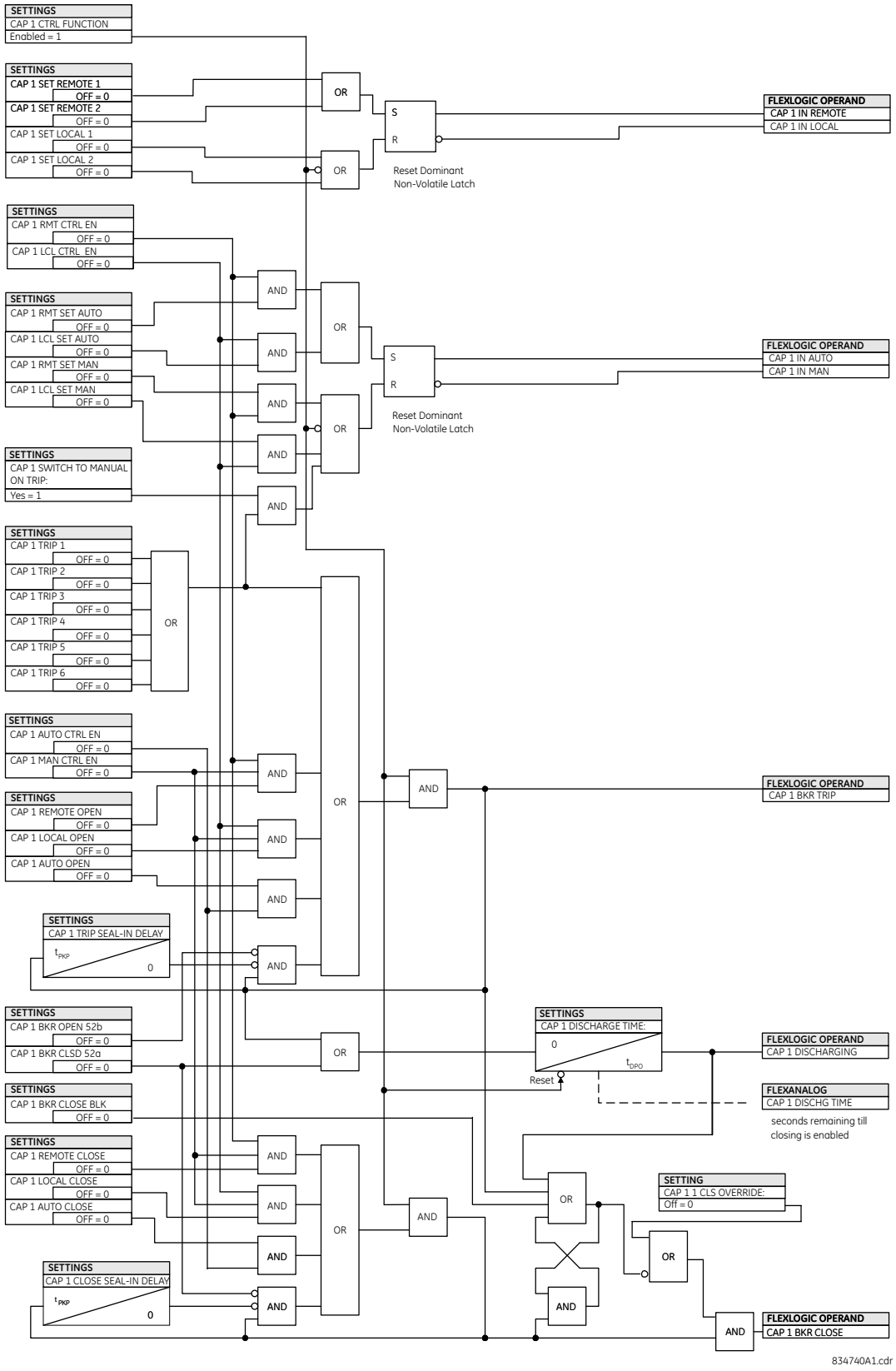

Figure 5–95: CAPACITOR BANK CONTROL SCHEME LOGIC

PATH: SETTINGS ⇨⇩ CONTROL ELEMENTS ⇨⇩ TIME OF DAY TIMERS ⇨ TIME OF DAY TIMER1(5)

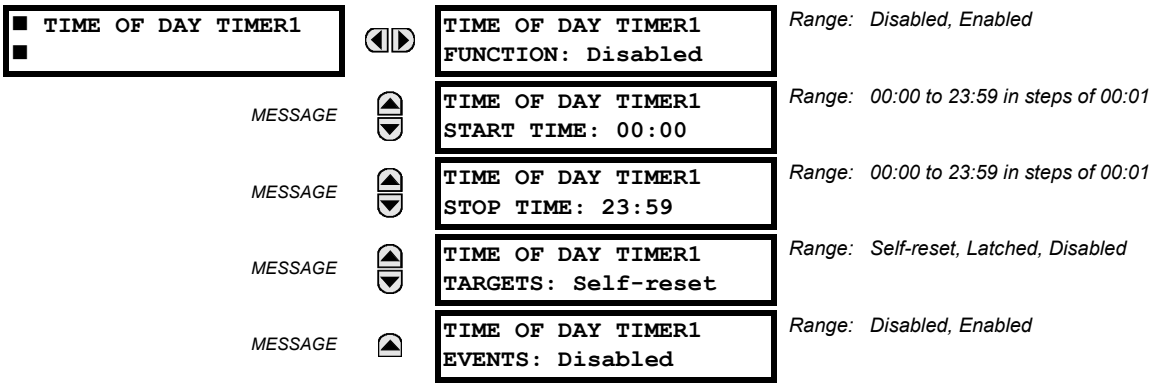

The time of day timer function provides the ability to program control actions based on real time. There are five identical time of day timers, each with an independent start and stop time setting. Each timer is on when the C70 real-time clock/calendar value is later than its programmed start time, and earlier than its programmed stop time. The timers wrap around 24 h as illustrated below.

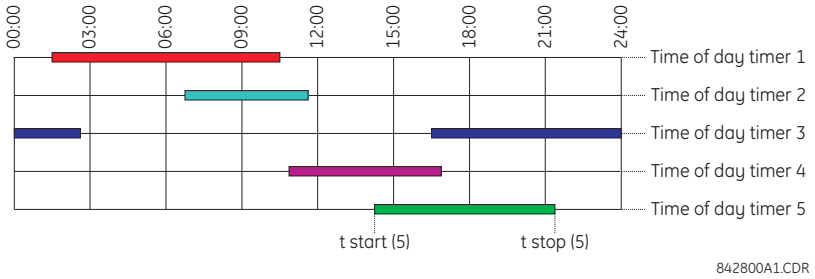

Figure 5–96: TIME OF DAY TIMER EXAMPLE

The TIME OF DAY 1 ON FlexLogic operand follows the state of the timers. In addition, one-second pulses are generated on the TIME OF DAY 1 START and TIME OF DAY 1 STOP FlexLogic operands when the timers turn on and off, respectively (see the figure below). These operands can be combined in FlexLogic with the day and month FlexLogic operands and/or with FlexElements operating on the DAYOFYEAR, DAYOFMONTH, and SECONDOFDAY FlexAnalog parameters to create virtually any time and date condition for custom time or season-based control actions. To activate these FlexAnalog parameters, enable at least one time of day timer.

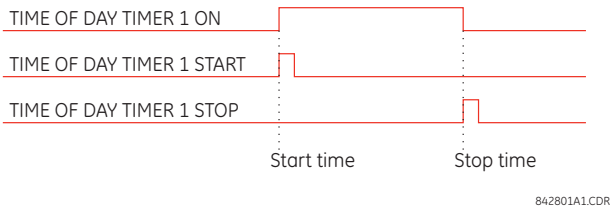

Figure 5–97: CLOSE/OPEN/MAINTAIN CONTROL VIA FLEXLOGIC OPERANDS

If the relay is connected to an external clock that follows daylight time changes, care should be taken that the changes do not result in undesired operation. The following settings are available for each time of day timer element.

- **TIME OF DAY TIMER1 START**: This setting is used to program the relay clock/calendar value for which the timer turns on.
- **TIME OF DAY TIMER1 STOP**: This setting is used to program the relay clock/calendar value for which the timer turns off.

- **TIME OF DAY TIMER1 EVENTS**: If enabled, the TIME OF DAY TIMER 1 ON and TIME OF DAY TIMER 1 OFF events are logged.

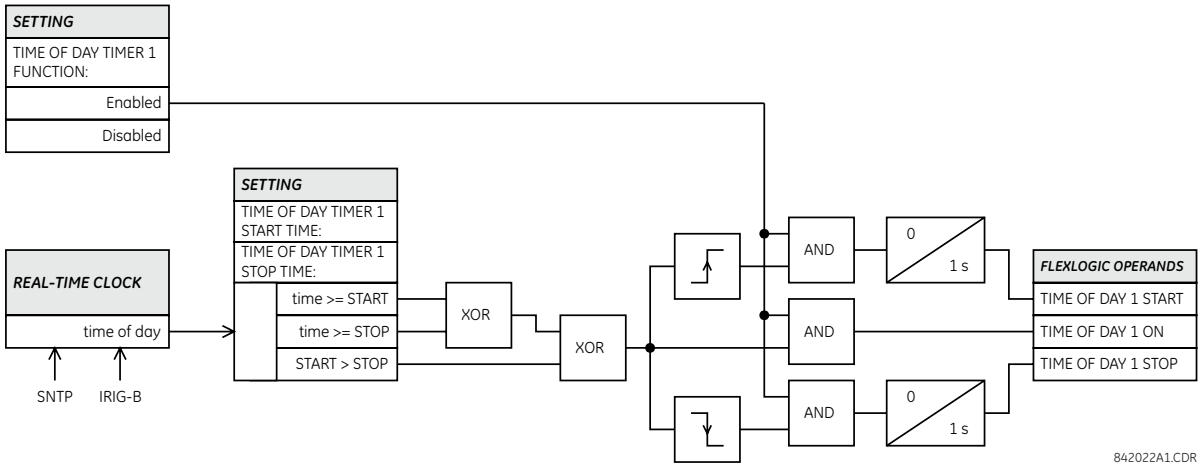

Figure 5–98: TIME OF DAY TIMER LOGIC

5.7.7 AUTOMATIC VOLTAGE REGULATOR

PATH: SETTINGS ⇨⇩ CONTROL ELEMENTS ⇨⇩ AUTOMATIC VOLTAGE REGULATOR ⇨ AUTOMATIC VOLTAGE REGULATOR 1(3)

■ AUTOMATIC VOLTAGE ■ REGULATOR 1	AVR 1 FUNCTION: Disabled	*Range: Disabled, Enabled*
MESSAGE	AVR 1 SOURCE: SRC 1	*Range: SRC 1, SRC 2, SRC 3, SRC 4, SRC 5, SRC 6*
MESSAGE	AVR 1 MINIMUM VOLTAGE: 0.500 pu	*Range: 0.500 to 1.500 pu in steps of 0.001*
MESSAGE	AVR 1 CONTROL MODE: Voltage	*Range: Voltage, VAR*
MESSAGE	AVR 1 VOLT OPERATING SIGNAL: V1	*Range: Vab, Vbc, Vca, Vaver, V1, Vaux, Vag, Vbg, Vcg*
MESSAGE	AVR 1 VOLT LEVEL TO CLOSE: 0.950 pu	*Range: 0.750 to 1.500 pu in steps of 0.001*
MESSAGE	AVR 1 VOLT LEVEL TO OPEN: 1.050 pu	*Range: 0.750 to 1.500 pu in steps of 0.001*
MESSAGE	AVR 1 VOLT DROP COMPENS Z: 0.00 Ω	*Range: 0 to 250.00 ohms in steps of 0.01*
MESSAGE	AVR 1 VOLT DROP COMPENS RCA: 75°	*Range: 30 to 90° in steps of 1*
MESSAGE	AVR 1 VAR LEVEL TO CLOSE: 0.500 pu	*Range: –1.500 to 1.500 pu in steps of 0.001*
MESSAGE	AVR 1 VAR LEVEL TO OPEN: -0.500 pu	*Range: –1.500 to 1.500 pu in steps of 0.001*
MESSAGE	AVR 1 POWER FACTOR LIMIT: 1.00	*Range: 0.50 to 1.00 pu in steps of 0.01*

MESSAGE
AVR 1 VAR OPEN MODE: Minimize No. of Ops.
Range: Minimize Uptime, Minimize No. of Ops.

MESSAGE
AVR 1 DELAY BEFORE CLOSE: 1.000 s
Range: 0.000 to 65.353 s in steps of 0.001

MESSAGE
AVR 1 DELAY BEFORE OPEN: 1.000 s
Range: 0.000 to 65.353 s in steps of 0.001

MESSAGE
AVR 1 BLOCK: Off
Range: FlexLogic operand

MESSAGE
AVR 1 TARGET: Self-reset
Range: Self-reset, Latched, Disabled

MESSAGE
AVR 1 EVENTS: Disabled
Range: Disabled, Enabled

The automatic voltage regulator element (AVR) is intended to switch a static capacitor bank breaker close and open to regulate either system voltage, load voltage, power factor, or reactive power. The following figure illustrates some possible applications.

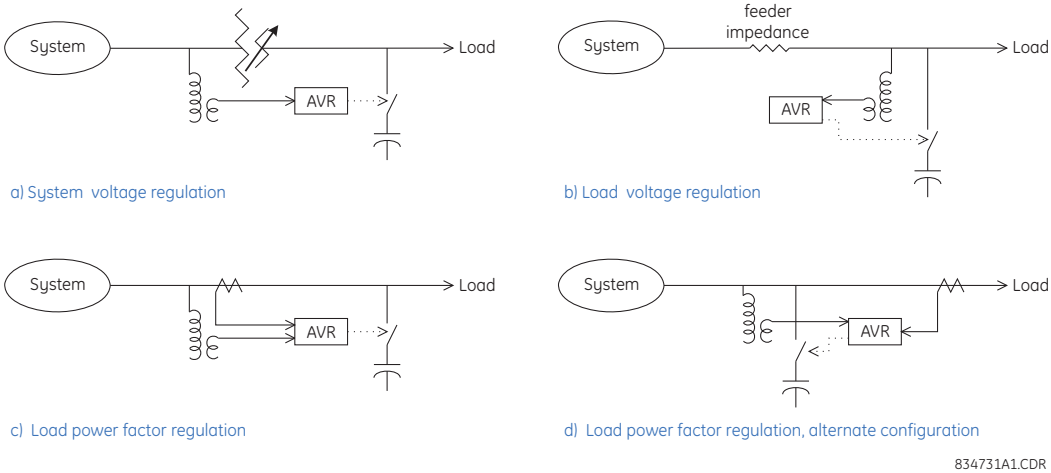

Figure 5–99: APPLICATIONS OF THE CAPACITOR AUTOMATIC VOLTAGE REGULATOR FUNCTION

Up to three identical automatic voltage regulator elements are provided, allowing the relay to be used with capacitor banks divided into sections for finer compensation steps, to provide switching speed dependent on the extent of the voltage or power deviation, or to provide different settings depending on a user-programmable factor such as time of day.

Each element can be set to operate in either “Voltage” mode or “VAR” mode. The voltage mode can be used with relatively short time delay settings as a system stability aid, or with longer time delay settings to assist in the regulation of steady state voltage. When the voltage decreases to the volts level to close setting, after the set close delay the capacitor is closed, raising the voltage. When the voltage increases to the level to open setting, after the set open delay the capacitor is opened, lowering the voltage. The load drop compensation feature can be used to effectively sense the voltage at a location remote from the relay.

The “VAR” mode can be used to regulate the var and power factor of a load to reduce transmission and distribution costs. If the capacitor deployment objective is to minimize system power losses, set the power factor limit to 1.000 to disable it and set the var open and close levels symmetrically about zero reactive power, with a difference between levels equal to the reactive power produced by the capacitor plus margin. Larger margins result in less frequent switching.

If on the other hand the deployment objective is solely to minimize power factor rate charges, set the power factor limit to the value at which power factor penalties are incurred, typically 0.9. Set the var close level to the vars that would flow should the power factor be at the limit when at the minimum expected kW demand. The open command characteristics can be selected to suit whether the preference is to minimize the amount of time the capacitor is online or to minimize the number of capacitor close operations. For the former preference, set the var open mode to “Minimize Uptime” and set the var

open level below the close level by an amount equal to the capacitor var rating plus margin. For the latter preference, set the var open mode to “Minimize No. of Ops” (minimize number of operations) and set the var open level to the negative of the close level.

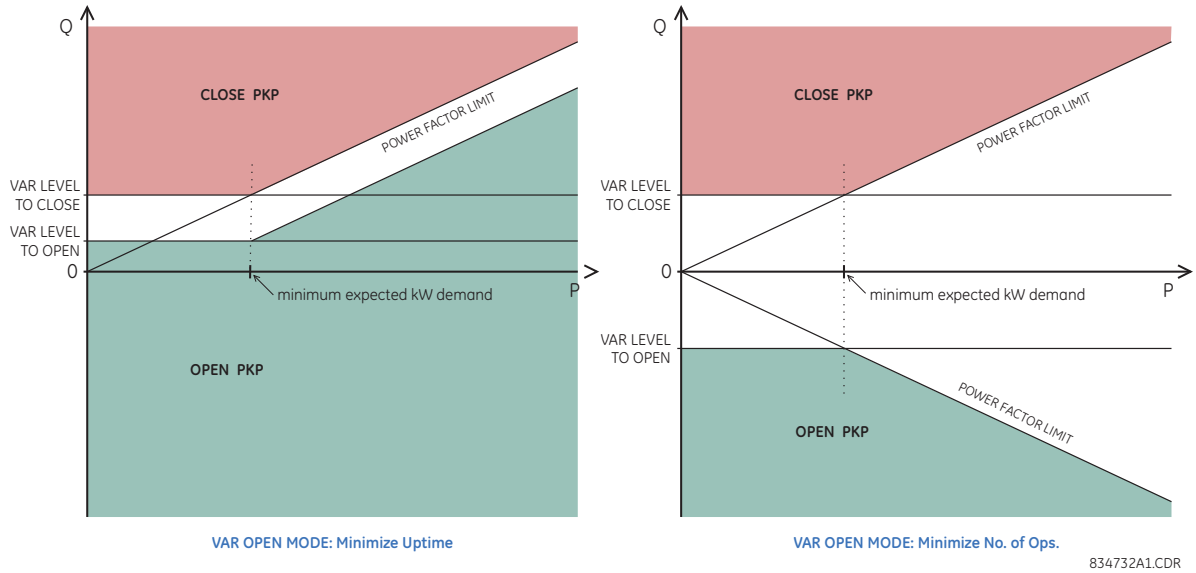

Figure 5–100: AUTOMATIC VOLTAGE REGULATOR PICKUP CHARACTERISTICS IN “VAR” MODE

Care should be taken that the settings do not result in the capacitor being continuously cycled close and open. In the voltage mode the close voltage settings should be lower than the open voltage setting by more than the voltage change expected from capacitor switching, plus margin. Similarly in the “VAR” mode the close var setting should be higher than the open var setting by more than the expected var change due to capacitor switching, plus margin. For configurations where the capacitor current is not included in the measured current, there could still be a measured var change due to loads whose power factor increases with increasing voltage. In general, the larger the margin, the less often the capacitor will be switched.

Delays should be set long enough to avoid undesired operations on transient conditions. Depending on the application, this could include operations for noise hits, for transient voltage depressions accompanying successful fault clearance, and short-term voltage conditions pending automatic reclosure. Delays can also be used to time co-ordinate the switching of multiple capacitor banks, or sections of the same bank.

The following settings are available.

- **AVR 1 SOURCE**: Selects signal source of the control variables of interest. In case of voltage control applications, the selected source needs to have the appropriate voltages configured for proper operation. For example, when using positive-sequence voltage as a control variable, phase voltages must be configured under the source; or when using single-phase auxiliary voltage, the auxiliary source voltage must be configured. In case of “VAR” mode and of voltage mode with voltage drop compensation, the indicated source must be configured with phase voltages and currents into the regulated load or bus, and should include the capacitor current. If the source indicated here does not support the control variable selected, the function will restrain itself from operating, and assert neither the close or open command.
- **AVR 1 MINIMUM VOLTAGE**: This value sets the minimum voltage for capacitor switching, to discriminate against loss of voltage. For voltage mode, this setting applies to the voltage selected for control. For “VAR” mode, this setting applies to the positive sequence voltage.
- **AVR 1 CONTROL MODE**: This setting selects either voltage control for voltage regulation applications, or var control for power factor/reactive power regulation applications.
- **AVR 1 VOLT OPERATING SIGNAL**: When the control mode is voltage, this setting is used to select whether the AVR responds to an individual phase-to-phase voltage or phase-to-ground voltage, the average of the three phase-to-phase voltages, the positive sequence voltage, or the auxiliary RMS voltage. The ability to select the same voltage quantity as is used by other AVRs facilitates coordination with those AVRs.
- **AVR 1 VOLT LEVEL TO CLOSE**: In the voltage mode, this setting specifies the voltage level at or below which to issue the close command.

- **AVR 1 VOLT LEVEL TO OPEN**: In the voltage mode, this setting specifies the voltage level at or above which to issue the open command. The following figure illustrates voltage control level settings.

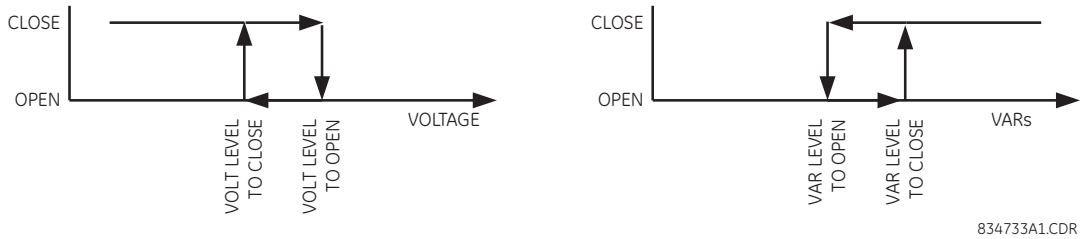

Figure 5–101: CLOSE AND OPEN LEVELS WHEN CONTROLLING VOLTAGE OR VARS

- **AVR 1 VOLT DROP COMPENS Z**: In the voltage mode, this setting allows compensating for voltage drop on the line when the relay measuring point is located upstream of the load. Positive-sequence line impedance is entered in secondary ohms. Compensation cannot exceed 20% of the nominal phase voltage.
- **AVR 1 VOLT DROP COMPENS RCA**: In the voltage mode, this setting specifies the angle of the line impedance for voltage drop calculations.
- **AVR 1 VAR LEVEL TO CLOSE**: In the "VAR" mode, this setting specifies level for the three-phase reactive power level at or above which to issue the close command. The 1 pu value is the product of the nominal primary phase-to-phase voltage, the CT primary, and $\sqrt{3}$. When the source current is an internal summation of two or more CT bank currents, the largest CT primary is used to define the 1 pu value for this setting.
- **AVR 1 VAR LEVEL TO OPEN**: In the "VAR" mode, this setting specifies level for the three-phase reactive power level at or below which to issue the OPEN command. The 1 pu value is defined as for the **VAR LEVEL TO CLOSE** setting.
- **AVR 1 POWER FACTOR LIMIT**: In the "VAR" mode, this setting specifies the power factor below which close commands are allowed. Also affects open commands as shown in the above figure. If set to "1.00", the power factor has no effect.
- **AVR 1 VAR OPEN MODE**: Selects the close command characteristic, either "Minimize No. of Ops." (minimize number of operations) or "Minimize Uptime", as described earlier in the *Automatic voltage regulator pickup characteristics in "VAR" mode* diagram.
- **AVR 1 DELAY BEFORE CLOSE**: This setting specifies delay before issuing the close command, and is used to coordinate with other regulators, or to ride through abnormal system conditions such as faults or re-close sequences.
- **AVR 1 DELAY BEFORE OPEN**: This setting specifies delay before issuing the open command, and is used to coordinate with other regulators, or to ride through abnormal system conditions such as faults or re-close sequences.
- **AVR 1 BLOCK**: This setting specifies a dynamic blocking condition. When blocked the element resets its output flags and internal timers. VT fuse fail is a typical application.

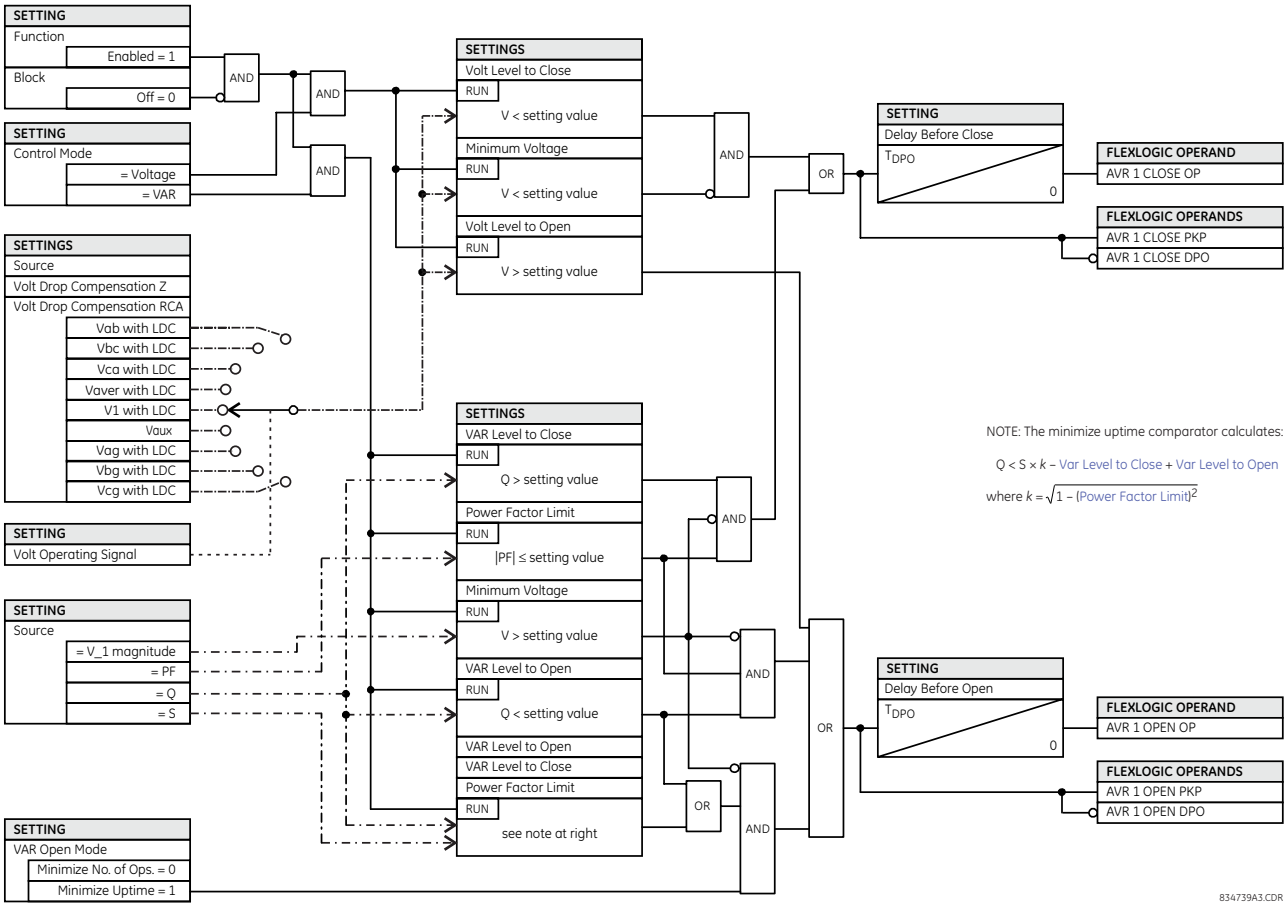

Figure 5–102: AUTOMATIC VOLTAGE REGULATOR SCHEME LOGIC

PATH: SETTINGS ⇨⇩ CONTROL ELEMENTS ⇨⇩ DIGITAL ELEMENTS ⇨ DIGITAL ELEMENT 1(48)

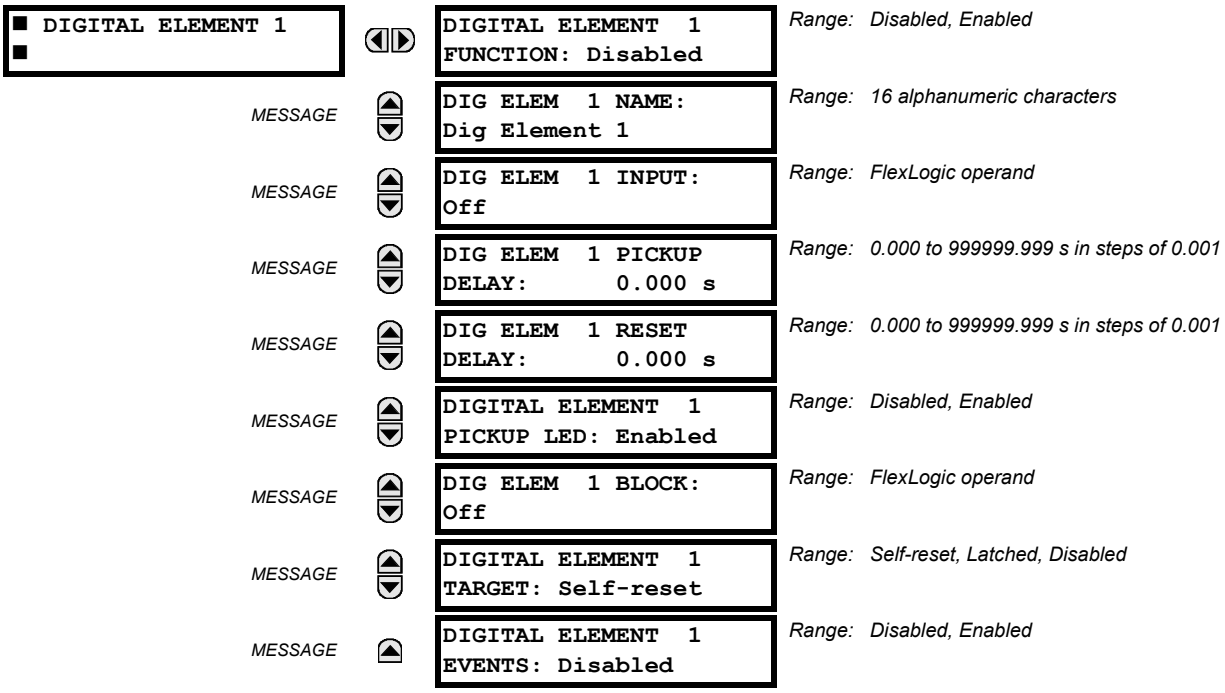

NOTE

Digital elements run once per power system cycle.

As such they can easily fail to react to an input signal or a block signal with a duration less than one power system cycle. This also means that digital element output can react up to one power system cycle later than the pickup and reset delay settings indicate.

Do not use digital elements with transient signals, such as communications commands. Do not use digital elements where random delays of up to one cycle cannot be tolerated, such as in high speed protection.

There are 48 identical digital elements available, numbered 1 to 48. A digital element can monitor any FlexLogic operand and present a target message and/or enable events recording depending on the output operand state. The digital element settings include a name which will be referenced in any target message, a blocking input from any selected FlexLogic operand, and a timer for pickup and reset delays for the output operand.

- **DIGITAL ELEMENT 1 INPUT:** Selects a FlexLogic operand to be monitored by the digital element.
- **DIGITAL ELEMENT 1 PICKUP DELAY:** Sets the required time delay from element pickup to element operation. If a pickup delay is not required, set to "0". To avoid nuisance alarms, set the delay greater than the operating time of the breaker.
- **DIGITAL ELEMENT 1 RESET DELAY:** Sets the time delay to reset. If a reset delay is not required, set to “0”.
- **DIGITAL ELEMENT 1 PICKUP LED**: This setting enables or disabled the digital element pickup LED. When set to “Disabled”, the operation of the pickup LED is blocked.

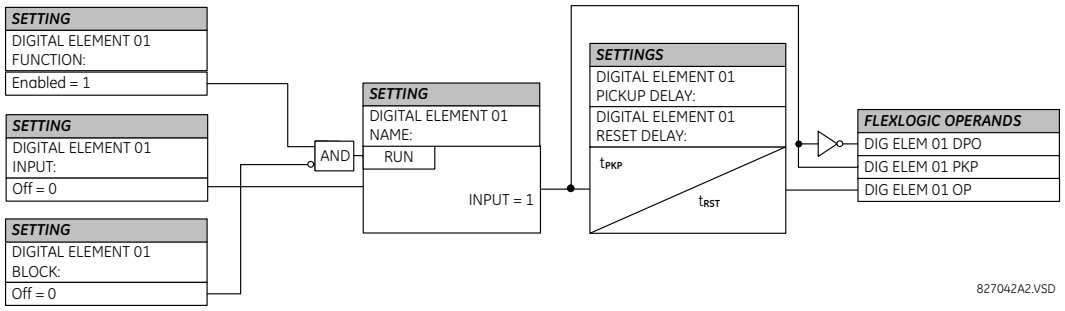

Figure 5–103: DIGITAL ELEMENT SCHEME LOGIC

CIRCUIT MONITORING APPLICATIONS:

Some versions of the digital input modules include an active voltage monitor circuit connected across form-A contacts. The voltage monitor circuit limits the trickle current through the output circuit (see technical specifications for form-A).

As long as the current through the voltage monitor is above a threshold (see technical specifications for form-A), the "Cont Op 1 VOn" FlexLogic operand will be set (for contact input 1 – corresponding operands exist for each contact output). If the output circuit has a high resistance or the DC current is interrupted, the trickle current will drop below the threshold and the "Cont Op 1 VOff" FlexLogic operand will be set. Consequently, the state of these operands can be used as indicators of the integrity of the circuits in which form-A contacts are inserted.

EXAMPLE 1: BREAKER TRIP CIRCUIT INTEGRITY MONITORING

In many applications it is desired to monitor the breaker trip circuit integrity so problems can be detected before a trip operation is required. The circuit is considered to be healthy when the voltage monitor connected across the trip output contact detects a low level of current, well below the operating current of the breaker trip coil. If the circuit presents a high resistance, the trickle current will fall below the monitor threshold and an alarm would be declared.

In most breaker control circuits, the trip coil is connected in series with a breaker auxiliary contact which is open when the breaker is open (see diagram below). To prevent unwanted alarms in this situation, the trip circuit monitoring logic must include the breaker position.

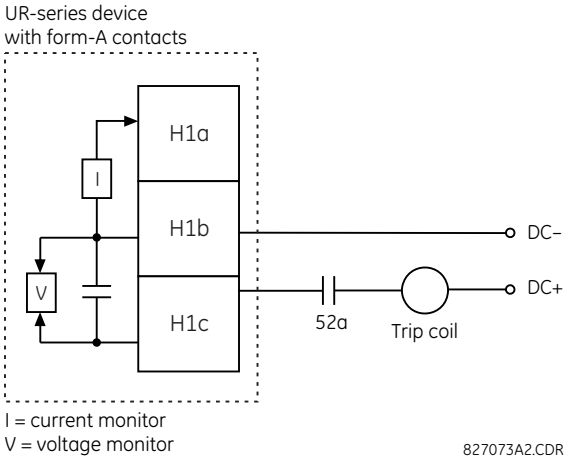

Figure 5–104: TRIP CIRCUIT EXAMPLE 1

Assume the output contact H1 is a trip contact. Using the contact output settings, this output will be given an ID name; for example, “Cont Op 1". Assume a 52a breaker auxiliary contact is connected to contact input H5a to monitor breaker status. Using the contact input settings, this input will be given an ID name, for example, “Cont Ip 1", and will be set “On” when the breaker is closed. The settings to use digital element 1 to monitor the breaker trip circuit are indicated below (EnerVista UR Setup example shown):

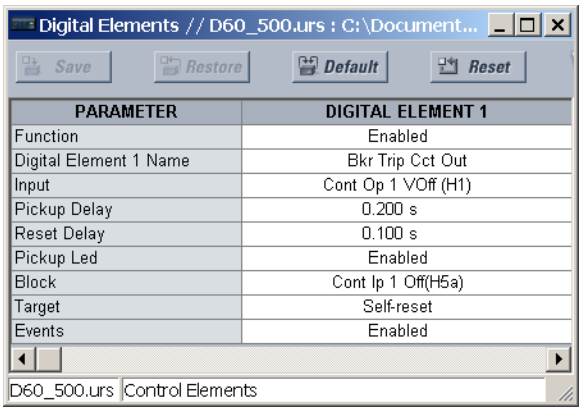

EXAMPLE 2: BREAKER TRIP CIRCUIT INTEGRITY MONITORING

If it is required to monitor the trip circuit continuously, independent of the breaker position (open or closed), a method to maintain the monitoring current flow through the trip circuit when the breaker is open must be provided (as shown in the figure below). This can be achieved by connecting a suitable resistor (see figure below) across the auxiliary contact in the trip circuit. In this case, it is not required to supervise the monitoring circuit with the breaker position – the **BLOCK** setting is selected to “Off”. In this case, the settings are as follows (EnerVista UR Setup example shown).

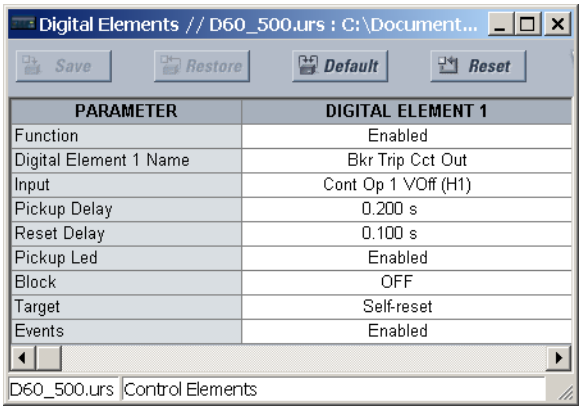

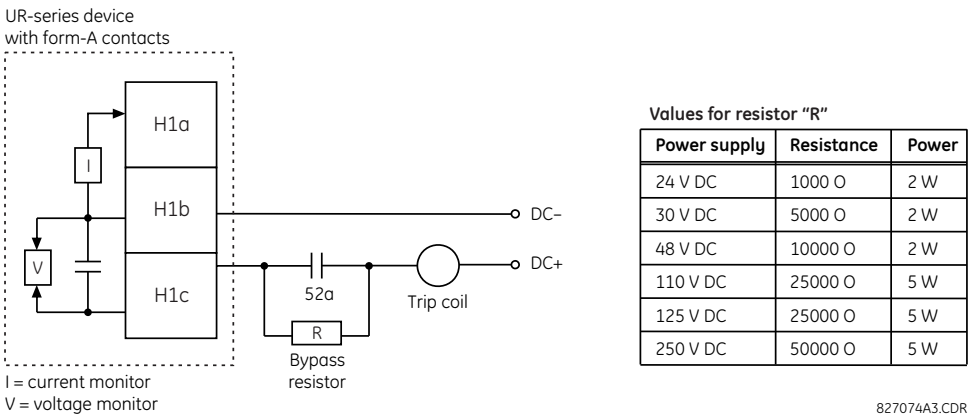

Values for resistor “R”

Power supply	Resistance	Power
24 V DC	1000 Ω	2 W
30 V DC	5000 Ω	2 W
48 V DC	10000 Ω	2 W
110 V DC	25000 Ω	5 W
125 V DC	25000 Ω	5 W
250 V DC	50000 Ω	5 W

Figure 5–105: TRIP CIRCUIT EXAMPLE 2

NOTE

The wiring connection for two examples above is applicable to both form-A contacts with voltage monitoring and solid-state contact with voltage monitoring.

5.7.9 DIGITAL COUNTERS

PATH: SETTINGS ⇨⇩ CONTROL ELEMENTS ⇨⇩ DIGITAL COUNTERS ⇨ COUNTER 1(8)

■ COUNTER 1 ■		COUNTER 1 FUNCTION: Disabled	Range: Disabled, Enabled
	MESSAGE	COUNTER 1 NAME: Counter 1	Range: 12 alphanumeric characters
	MESSAGE	COUNTER 1 UNITS:	Range: 6 alphanumeric characters
	MESSAGE	COUNTER 1 PRESET: 0	Range: –2,147,483,648 to +2,147,483,647
	MESSAGE	COUNTER 1 COMPARE: 0	Range: –2,147,483,648 to +2,147,483,647
	MESSAGE	COUNTER 1 UP: Off	Range: FlexLogic operand
	MESSAGE	COUNTER 1 DOWN: Off	Range: FlexLogic operand
	MESSAGE	COUNTER 1 BLOCK: Off	Range: FlexLogic operand
	MESSAGE	CNT1 SET TO PRESET: Off	Range: FlexLogic operand
	MESSAGE	COUNTER 1 RESET: Off	Range: FlexLogic operand
	MESSAGE	COUNT1 FREEZE/RESET: Off	Range: FlexLogic operand
	MESSAGE	COUNT1 FREEZE/COUNT: Off	Range: FlexLogic operand

There are eight identical digital counters, numbered from 1 to 8. A digital counter counts the number of state transitions from Logic 0 to Logic 1. The counter is used to count operations such as the pickups of an element, the changes of state of an external contact (e.g. breaker auxiliary switch), or pulses from a watt-hour meter.

- **COUNTER 1 UNITS:** Assigns a label to identify the unit of measure pertaining to the digital transitions to be counted. The units label will appear in the corresponding actual values status.
- **COUNTER 1 PRESET:** Sets the count to a required preset value before counting operations begin, as in the case where a substitute relay is to be installed in place of an in-service relay, or while the counter is running.
- **COUNTER 1 COMPARE:** Sets the value to which the accumulated count value is compared. Three FlexLogic output operands are provided to indicate if the present value is 'more than (HI)', 'equal to (EQL)', or 'less than (LO)' the set value.
- **COUNTER 1 UP:** Selects the FlexLogic operand for incrementing the counter. If an enabled UP input is received when the accumulated value is at the limit of +2,147,483,647 counts, the counter will rollover to –2,147,483,648.
- **COUNTER 1 DOWN:** Selects the FlexLogic operand for decrementing the counter. If an enabled DOWN input is received when the accumulated value is at the limit of –2,147,483,648 counts, the counter will rollover to +2,147,483,647.
- **COUNTER 1 BLOCK:** Selects the FlexLogic operand for blocking the counting operation. All counter operands are blocked.

- **CNT1 SET TO PRESET:** Selects the FlexLogic operand used to set the count to the preset value. The counter will be set to the preset value in the following situations:
  1. When the counter is enabled and the **CNT1 SET TO PRESET** operand has the value 1 (when the counter is enabled and **CNT1 SET TO PRESET** operand is 0, the counter will be set to 0).
  2. When the counter is running and the **CNT1 SET TO PRESET** operand changes the state from 0 to 1 (**CNT1 SET TO PRESET** changing from 1 to 0 while the counter is running has no effect on the count).
  3. When a reset or reset/freeze command is sent to the counter and the **CNT1 SET TO PRESET** operand has the value 1 (when a reset or reset/freeze command is sent to the counter and the **CNT1 SET TO PRESET** operand has the value 0, the counter will be set to 0).
- **COUNTER 1 RESET:** Selects the FlexLogic operand for setting the count to either "0" or the preset value depending on the state of the **CNT1 SET TO PRESET** operand.
- **COUNTER 1 FREEZE/RESET:** Selects the FlexLogic operand for capturing (freezing) the accumulated count value into a separate register with the date and time of the operation, and resetting the count to "0".
- **COUNTER 1 FREEZE/COUNT:** Selects the FlexLogic operand for capturing (freezing) the accumulated count value into a separate register with the date and time of the operation, and continuing counting. The present accumulated value and captured frozen value with the associated date/time stamp are available as actual values. If control power is interrupted, the accumulated and frozen values are saved into non-volatile memory during the power down operation.

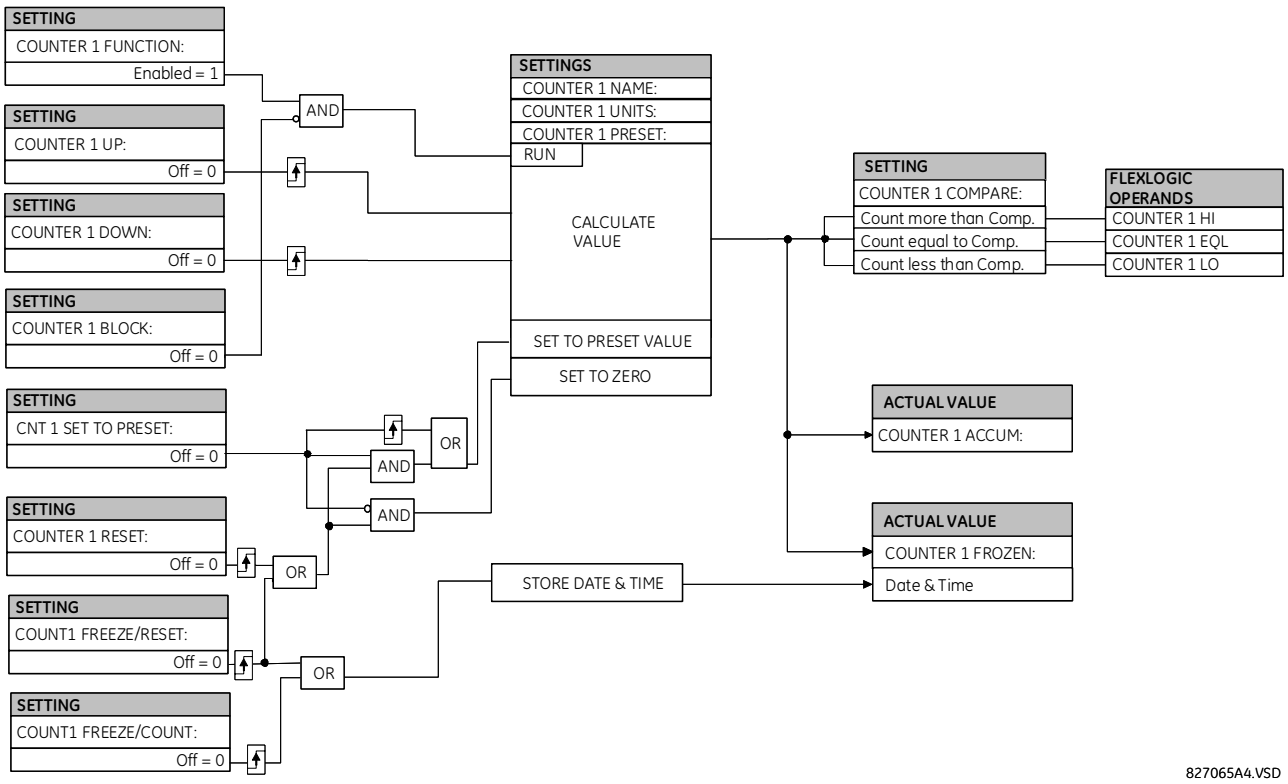

Figure 5–106: DIGITAL COUNTER SCHEME LOGIC

a) MAIN MENU

PATH: SETTINGS ⇨⇩ CONTROL ELEMENTS ⇨⇩ MONITORING ELEMENTS

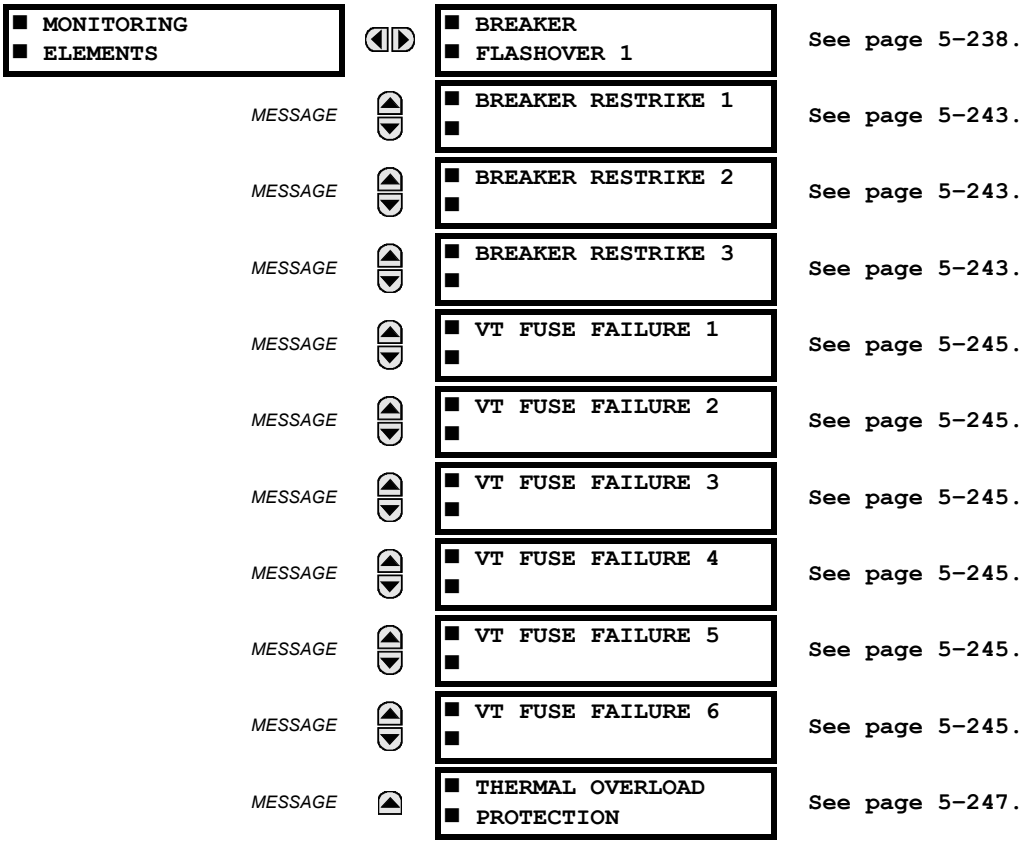

b) BREAKER FLASHOVER

PATH: SETTINGS ⇨⇩ CONTROL ELEMENTS ⇨⇩ MONITORING ELEMENTS ⇨⇩ BREAKER FLASHOVER 1

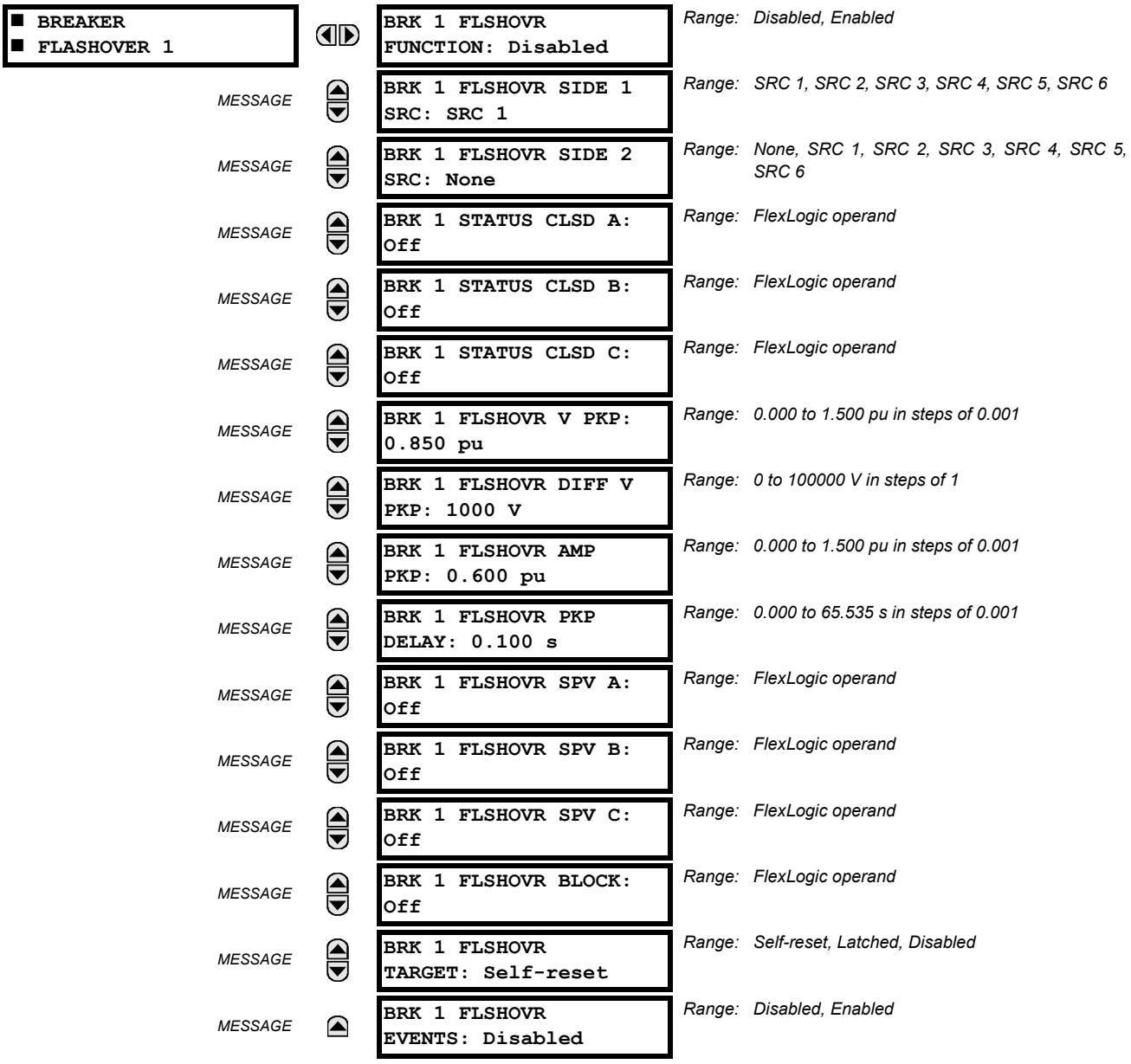

The detection of the breaker flashover is based on the following condition:

- Breaker open,
- When phase voltage measured from either side of the breaker is greater than the setting,
- Measured current through the breaker is greater than the pickup setting, and
- Voltage difference across the breaker drops below the pickup setting (only applicable to six VTs application)

Furthermore, the scheme is applicable for cases where one or two sets of three-phase voltages are available across the breaker, as follows:

- One set of three-phase voltages is available across the breaker (three VTs application)
- Two sets of three-phase voltages are available across the breaker (six VTs application)

Three VT Breaker Flashover Application

When only one set of VTs is available across the breaker, set the **BRK 1 FLSHOVR SIDE 2 SRC** setting to "None."

NOTE

Voltages must be present prior to flashover conditions. If the three VTs are placed after the breaker on the line (or feeder), and the downstream breaker is open, the measured voltage would be zero and the flashover element will not be initiated.

The flashover detection resets if the current drops below **BRK 1 FLSHOVR AMP PKP**, the breaker closes, or the FlexLogic operand selected by **BRK 1 FLSHOVR SPV A** changes to high. It is recommended to use the supervision **BRK 1 FLSHOVR SPV A** setting, and select a trip operand that does not allow the flashover element to pick up prior to the trip.

The flashover detection can be used for external alarm, re-tripping the breaker, or energizing the lockout relay.

Consider the following configuration:

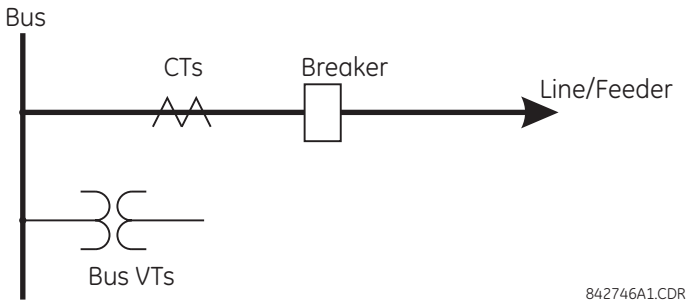

The source 1 (SRC1) phase currents are feeder CTs and phase voltages are bus VTs, and Contact Input 1 is set as Breaker 52a contact. The conditions prior to flashover detection are:

- 52a status = 0
- VAg is greater than the **BRK 1 FLSHOVR V PKP** setting
- IA is below **BRK 1 FLSHOVR AMP PKP** (ideally, IA = 0)

The conditions at flashover detection are:

- 52a status = 0
- VAg is greater or lesser than the **BRK 1 FLSHOVR V PKP** setting
- IA is greater than the **BRK 1 FLSHOVR AMP PKP** setting

Six VT Breaker Flashover Application

In a six-VT application, the VTs located on both sides of a breaker are available. When the breaker is open, the voltage difference across the breaker is the rated voltage if the line is not energized from the remote end, or it can be two times the rated voltage at the time of synchronization if the line is energized from the remote. At the occurrence of breaker flashover, the voltage difference across breaker drops and current greater than **BRK 1 FLSHOVR AMP PKP** starts flowing through the breaker. These conditions are also true for a normal closed operation of a breaker where the voltage difference across breaker is practically zero and load current flows through the breaker. To distinguish between breaker flashover and normal closed operation of breaker, the Breaker Status is utilized.

In a six-VT configuration, if the voltages from VTs located on one of the sides of breaker disappear due to VT fuse failure or other reason, a three-VT configuration can provide the breaker flashover detection. If however, the blocking of breaker flashover detection is wanted under voltage loss on one side condition, then it can be done by applying the appropriate FlexLogic operand to the **BRK FLSHOVR BLOCK** setting.

Consider the following configuration:

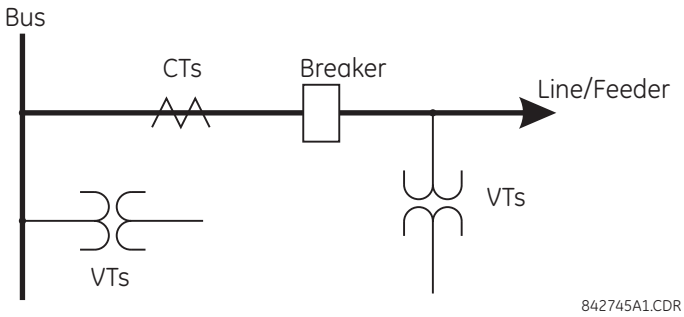

The source 1 (SRC1) phase currents are CTs and phase voltages are bus VTs. The source 2 (SRC2) phase voltages are line VTs. Contact input 1 is set as the breaker 52a contact (optional).

The conditions prior to flashover detection are:

- 52a status = 0
- VAg or Vag greater than the BRK 1 FLSHOVR V PKP setting
- IA is below BRK 1 FLSHOVR AMP PKP (ideally, IA = 0)
- DVA is greater than the BRK 1 FLSHOVR DIFF V PKP setting

The conditions at flashover detection are:

- 52a status = 0
- VAg or Vag greater or lesser than the BRK 1 FLSHOVR V PKP setting
- IA is greater than the BRK 1 FLSHOVR AMP PKP setting
- DVA is less than the BRK 1 FLSHOVR DIFF V PKP setting

NOTE

The element is operational only when phase-to-ground voltages are connected to relay terminals. The flashover element will not operate if delta voltages are applied.

The breaker flashover settings are described below.

- **BRK 1 FLSHOVR SIDE 1 SRC**: This setting specifies a signal source used to provide three-phase voltages and three-phase currents from one side of the current breaker. The source selected as a setting and must be configured with breaker phase voltages and currents, even if only three VTs are available across the breaker.
- **BRK 1 FLSHOVR SIDE 2 SRC**: This setting specifies a signal source used to provide another set of three phase voltages whenever six VTs are available across the breaker. For a three-VT application, set this setting to "None."
- **BRK 1 STATUS CLSD A** to **BRK 1 STATUS CLSD C**: These settings specify FlexLogic operands to indicate the closed status of the breaker. A separate FlexLogic operand can be selected to detect individual breaker pole status and provide flashover detection. The recommended setting is 52a breaker contact or another operand defining the breaker poles closed status.

  NOTE

  Leaving this setting off, meaning not configuring any FlexLogic to indicated Closed Breaker leads to maloperation of the element.

- **BRK 1 FLSHOVR V PKP**: This setting specifies a pickup level for the phase voltages from one or both sides of the breaker. If six VTs are available, opening the breaker leads to two possible combinations – live voltages from only one side of the breaker, or live voltages from both sides of the breaker. The detection of voltage above the selected value on either side of the breaker sets the scheme ready for flashover detection. Set **BRK FLSHOVR V PKP** to 85 to 90% of the nominal voltage.
- **BRK 1 FLSHOVR DIFF V PKP**: This setting specifies a pickup level for the phase voltage difference when two VTs per phase are available across the breaker. Set this setting to be lower than the monitored voltage difference that is observed when closed or opened breaker resistors are left in service. The setting is selected as primary volts difference between the sources.

- **BRK 1 FLSHOVR AMP PKP**: This setting specifies the normal load current which can flow through the breaker. Depending on the flashover protection application, the flashover current can vary from levels of the charging current when the line is not loaded to well above the maximum line (feeder) load (line/feeder connected to load).
- **BRK 1 FLSHOVR SPV A** to **BRK 1 FLSHOVR SPV C**: These settings specify FlexLogic operands (per breaker pole) that supervise the operation of the element per phase. Supervision can be provided by operation of other protection elements, breaker failure, and close and trip commands. A six-cycle time delay applies after the selected FlexLogic operand resets.
- **BRK FLSHOVR PKP DELAY**: This setting specifies the time delay to operate after a pickup condition is detected. Do not set it too long else the flashover current can disappear before its detection.

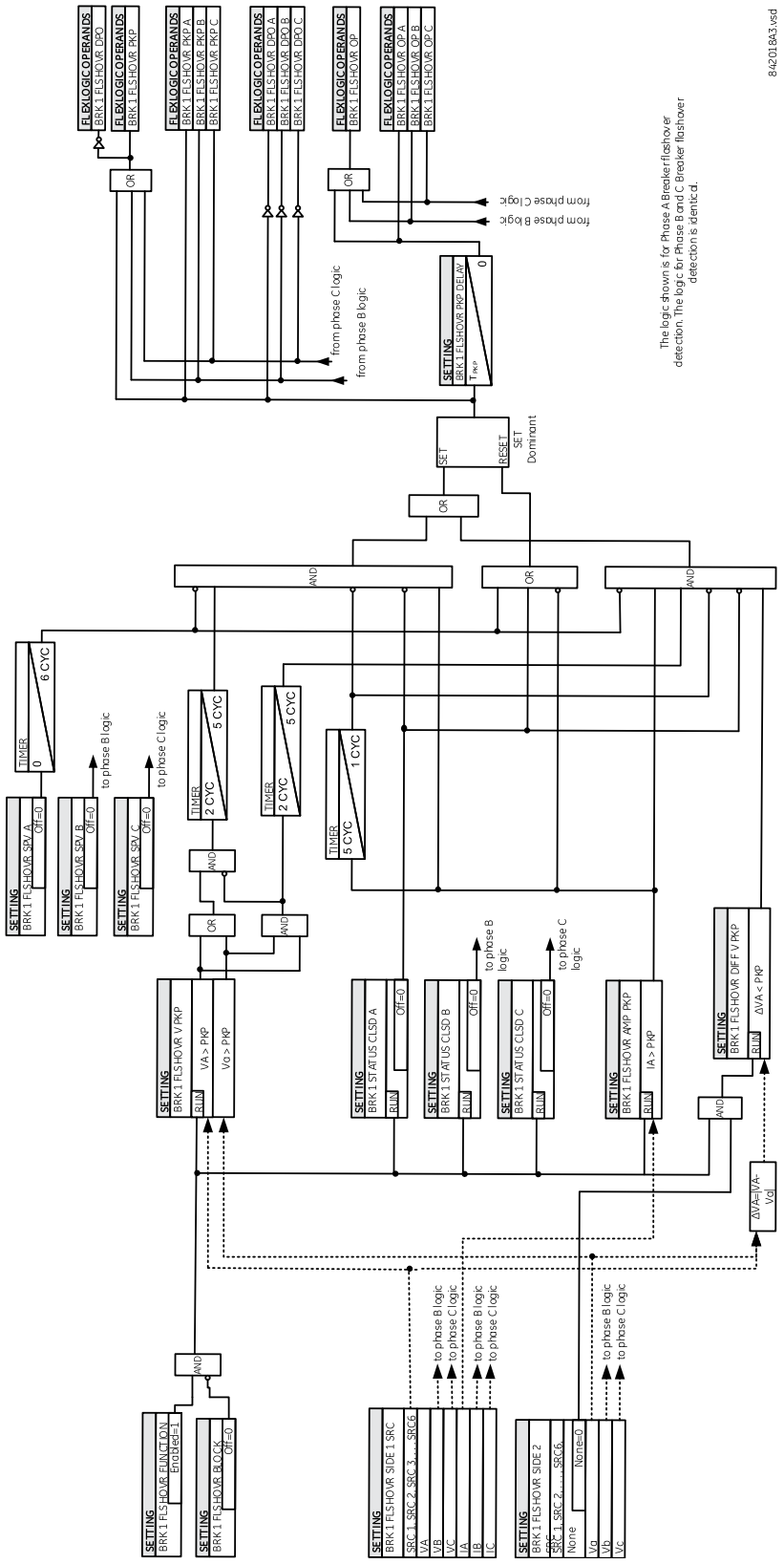

Figure 5–107: BREAKER FLASHOVER SCHEME LOGIC

c) BREAKER RESTRIKE

PATH: SETTINGS ⇨⇩ CONTROL ELEMENTS ⇨⇩ MONITORING ELEMENTS ⇨⇩ BREAKER RESTRIKE 1(3)

■ BREAKER RESTRIKE 1 ■		BREAKER RESTRIKE 1 FUNCTION: Disabled	*Range: Disabled, Enabled*
	MESSAGE	BRK RESTRIKE 1 BLOCK: Off	*Range: FlexLogic operand*
	MESSAGE	BREAKER RESTRIKE 1 SOURCE: SRC 1	*Range: SRC 1, SRC 2, SRC 3, SRC 4, SRC 5, SRC 6*
	MESSAGE	BREAKER RESTRIKE 1 PICKUP: 0.50 pu	*Range: 0.10 to 2.00 pu in steps of 0.01*
	MESSAGE	BREAKER RESTRIKE 1 RST DELAY: 0.100 s	*Range: 0.000 to 65.535 s in steps of 0.001*
	MESSAGE	BREAKER RESTRIKE 1 HF DETECT: Enabled	*Range: Disabled, Enabled*
	MESSAGE	BRK RSTR 1 BRK OPEN: Off	*Range: FlexLogic operand*
	MESSAGE	BRK RSTR 1 OPEN CMD: Off	*Range: FlexLogic operand*
	MESSAGE	BRK RSTR 1 CLS CMD: Off	*Range: FlexLogic operand*
	MESSAGE	BREAKER RESTRIKE 1 TARGET: Self-reset	*Range: Self-reset, Latched, Disabled*
	MESSAGE	BREAKER RESTRIKE 1 EVENTS: Disabled	*Range: Disabled, Enabled*

One breaker restrike element is provided for each CT bank in the C70.

According to IEEE standard C37.100: IEEE Standard Definitions for Power Switchgear, restrike is defined as “a resumption of current between the contacts of a switching device during an opening operation after an interval of zero current of ¼ cycle at normal frequency or longer”.

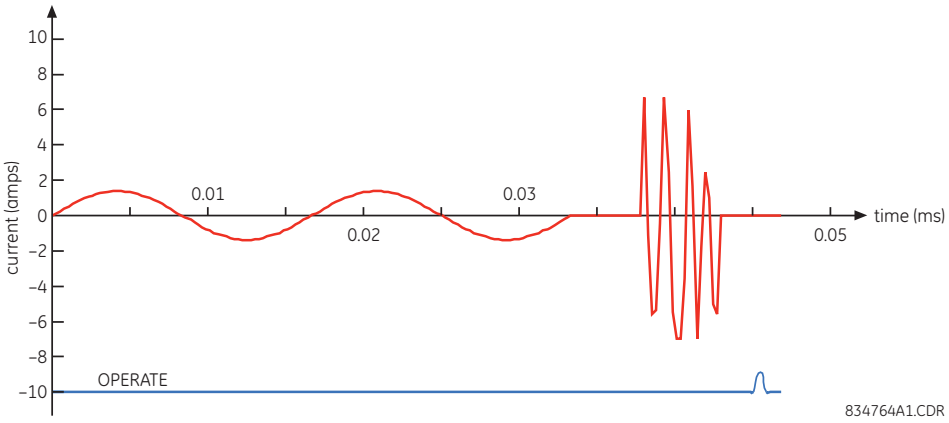

Figure 5–108: TYPICAL RESTRIKE WAVEFORM AND DETECTION FLAG

The breaker restrike algorithm responds to a successful interruption of the phase current following a declaration of capacitor bank offline as per the breaker pole indication. If a high-frequency or system frequency current with a magnitude greater than the threshold is resumed at least ¼ of a cycle later than the phase current interruption, then a breaker restrike condi-

tion is declared in the corresponding phase and the BRK RESTRIKE 1 OP operand is asserted for a short period of time. The user can add counters and other logic to facilitate the decision making process as to the appropriate actions upon detecting a single restrike or a series of consecutive restrikes.

A restrike event (FlexLogic operand) is declared if all of the following hold:

- The current is initially interrupted
- The breaker status is open
- An elevated high frequency current condition occurs (if the **BREAKER RESTRIKE 1 HF DETECT** setting is Enabled, otherwise the condition is bypassed), and
- The current subsequently drops out again

The algorithm is illustrated in the state machine diagram shown below.

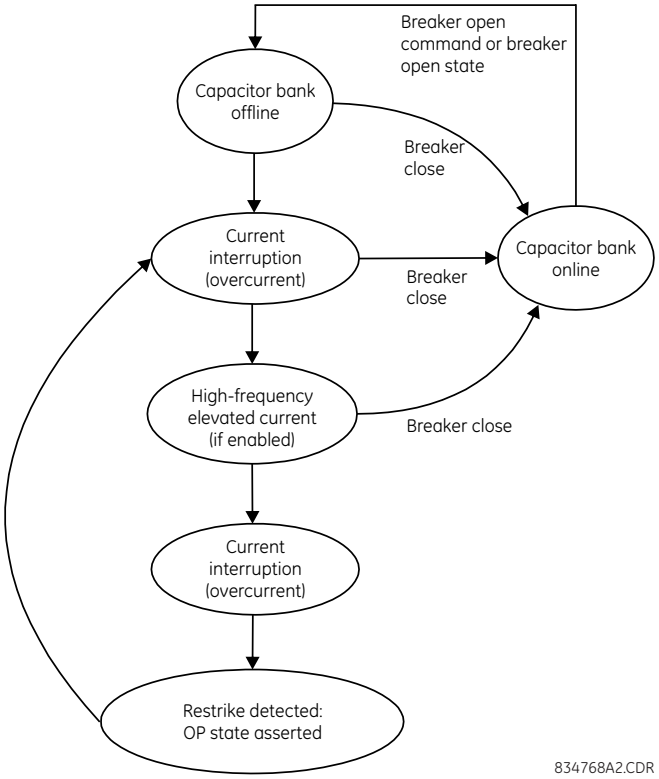

Figure 5–109: ALGORITHM ILLUSTRATION – STATE MACHINE TO DETECT RESTRIKE

In this way, a distinction is made between a self-extinguishing restrike and permanent breaker failure condition. The latter can be detected by the breaker failure function or a regular instantaneous overcurrent element. Also, a fast succession of restrikes will be picked up by breaker failure or instantaneous overcurrent protection.

The following settings are available for each element.

- **BREAKER RESTRIKE 1 FUNCTION**: This setting enable and disables operation of the breaker restrike detection element.
- **BRK RESTRIKE 1 BLOCK**: This setting is used to block operation of the breaker restrike detection element.
- **BREAKER RESTRIKE 1 SOURCE**: This setting selects the source of the current for this element. This source must have a valid CT bank assigned.
- **BREAKER RESTRIKE 1 PICKUP**: This setting specifies the pickup level of the overcurrent detector in per-unit values of CT nominal current.
- **BREAKER RESTRIKE 1 RST DELAY**: This setting specifies the reset delay for this element. When set to “0 ms”, then FlexLogic operand will be picked up for only 1/8th of the power cycle.

- **BREAKER RESTRIKE 1 HF DETECT**: This setting enables/disables high-frequency (HF) pattern detection when breaker restrike occurs. High-frequency pattern is typical for capacitor bank, cables, and long transmission line applications.
- **BRK RSTR 1 BRK OPEN**: This setting assigns a FlexLogic operand indicating the open position of the breaker. It must be logic "1" when breaker is open. It is important to assign either 52 contact with this setting or breaker close command with **BRK RSTR 1 CLS CMD** setting to give clear indication to the relay about breaker status.
- **BRK RSTR 1 OPEN CMD**: This setting assigns a FlexLogic operand indicating a breaker open command. It must be logic "1" when breaker is opened, either manually or from protection logic.
- **BRK RSTR 1 CLS CMD**: This setting assigns a FlexLogic operand indicating a breaker close command. It must be logic "1" when breaker is closed.

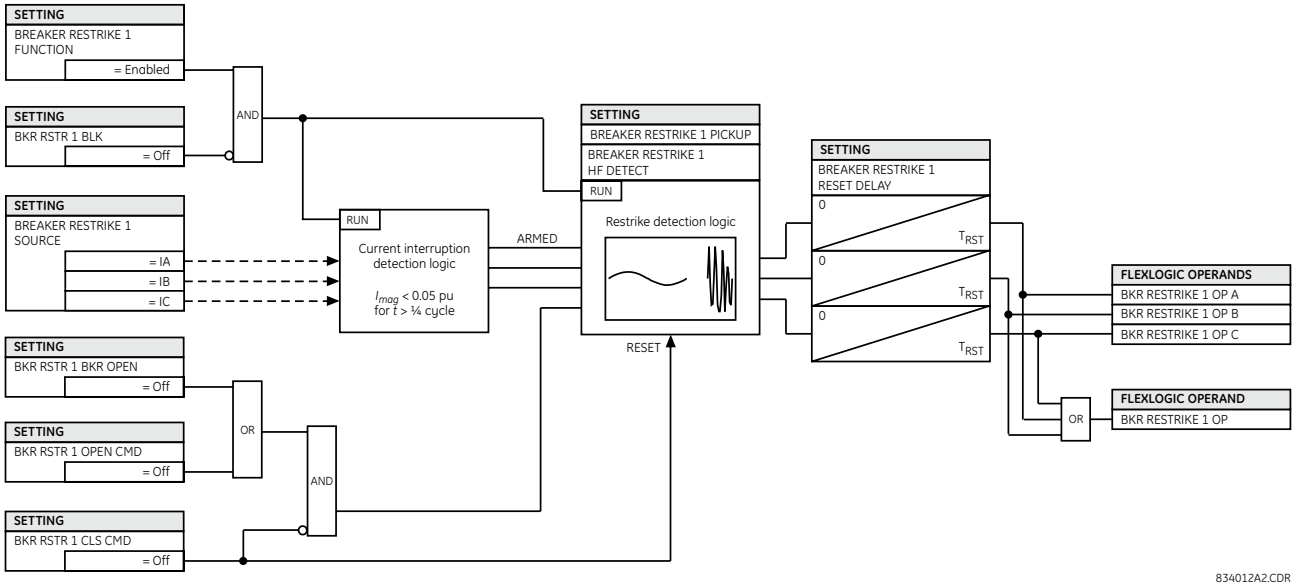

Figure 5–110: BREAKER RESTRIKE SCHEME LOGIC

d) VT FUSE FAILURE

PATH: SETTINGS ⇨⇩ CONTROL ELEMENTS ⇨⇩ MONITORING ELEMENTS ⇨⇩ VT FUSE FAILURE 1(6)

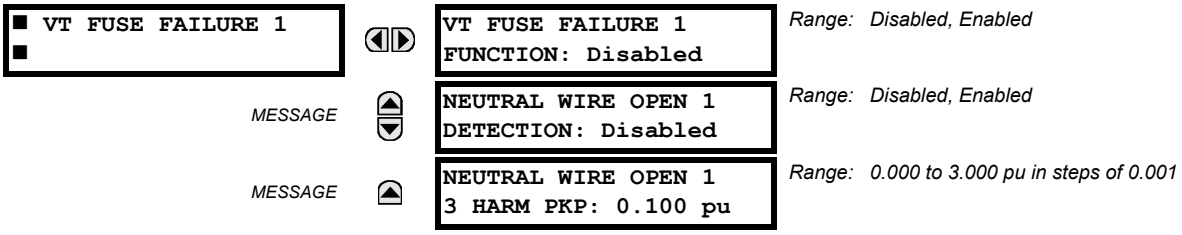

Every signal source includes a fuse failure scheme. A signal source must have a three-phase VT bank and a three-phase CT bank assigned to it, in order for the fuse failure scheme to operate.

The VT fuse failure detector can be used to raise an alarm and/or block elements that may operate incorrectly for a full or partial loss of AC potential caused by one or more blown fuses. Some elements that might be blocked (via the BLOCK input) are distance, voltage restrained overcurrent, and directional current.

There are two classes of fuse failure that occur:

- Class A: loss of one or two phases.
- Class B: loss of all three phases.

Different means of detection are required for each class. An indication of class A failures is a significant level of negative-sequence voltage, whereas an indication of class B failures is when positive sequence current is present and there is an insignificant amount of positive sequence voltage. Also rapid decrease in the phase voltages magnitude from a healthy voltage level without disturbance in current can indicate a VT fuse fail conditions. These noted indications of fuse failure can also be present when faults are present on the system, so a means of detecting faults and inhibiting fuse failure declarations during these events is provided.

Once the fuse failure condition is declared, it is sealed-in until the cause that generated it disappears.

An additional condition is introduced to inhibit a fuse failure declaration when the monitored circuit is de-energized; positive-sequence voltage and current are both below threshold levels.

The **VT FUSE FAILURE 1 FUNCTION** setting enables and disables the fuse failure feature for Source 1 VT Fuse Fail.

The **VT NEU WIRE OPEN 1 FUNCTION** setting enables and disables the VT neutral wire open detection function. When the VT is connected in Delta, do not enabled this function because there is no neutral wire for Delta connected VT.

The **VT NEU WIRE OPEN 1 3 HRAM PKP** setting specifies the pickup level of 3rd harmonic of 3V0 signal for the **VT NEU WIRE OPEN** detection logic to pick up.

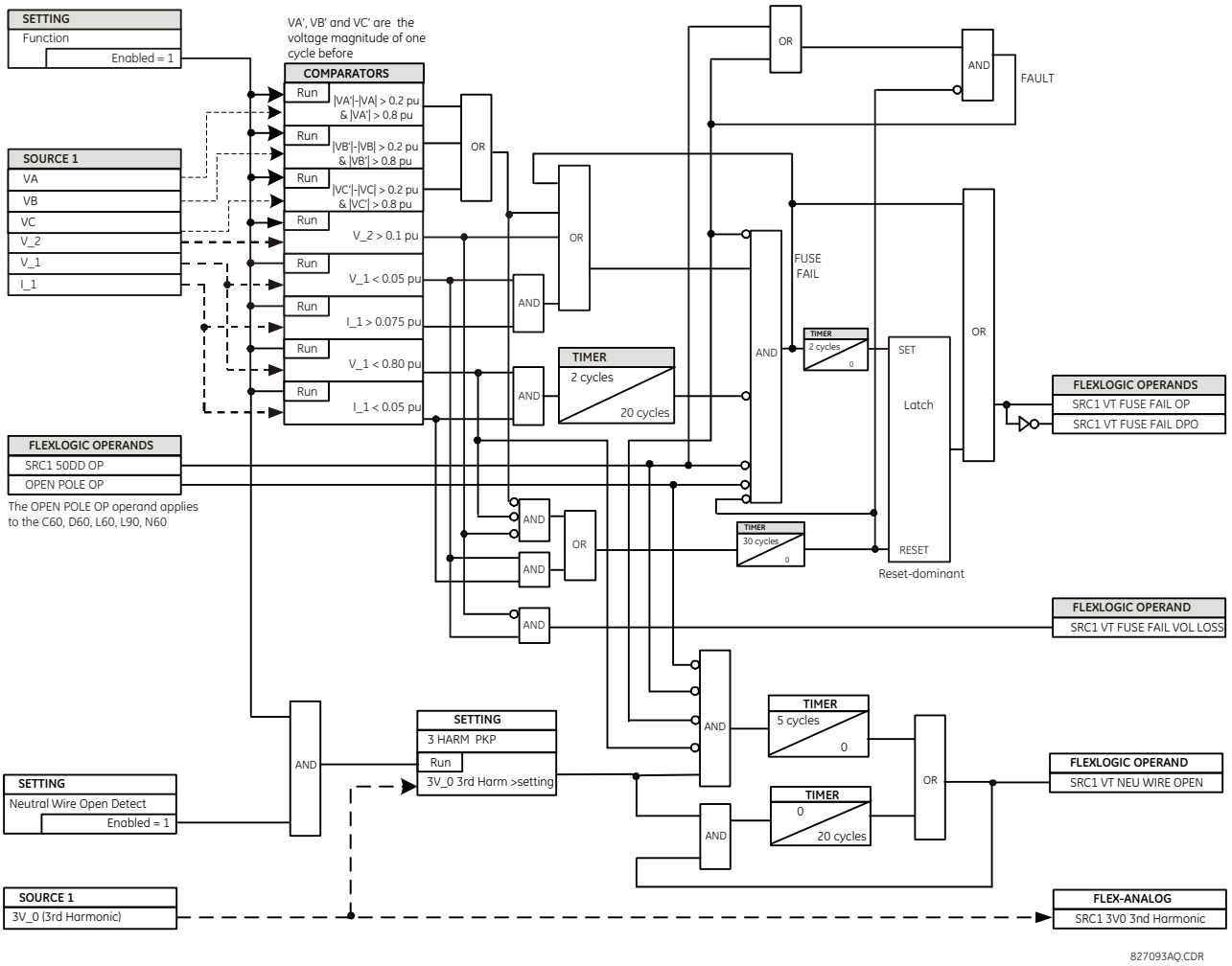

Figure 5–111: VT FUSE FAIL SCHEME LOGIC

Base voltage for this element is **PHASE VT SECONDARY** setting in the case of WYE VTs and (**PHASE VT SECONDARY**)/ $\sqrt{3}$ in case of DELTA VTs.

e) THERMAL OVERLOAD PROTECTION

PATH: SETTINGS ⇨⇩ CONTROL ELEMENTS ⇨⇩ MONITORING ELEMENTS ⇨⇩ THERMAL OVERLOAD PROTECTION ⇨ THERMAL PROTECTION 1(2)

■ THERMAL ■ PROTECTION 1		THERMAL PROTECTION 1 FUNCTION: Disabled	Range: Disabled, Enabled
	MESSAGE	THERMAL PROTECTION 1 SOURCE: SRC1	Range: SRC 1, SRC 2, SRC 3, SRC 4, SRC 5, SRC 6
	MESSAGE	THERMAL PROTECTION 1 BASE CURR: 0.80 pu	Range: 0.20 to 3.00 pu in steps of 0.01
	MESSAGE	THERMAL PROTECTION 1 k FACTOR: 1.10	Range: 1.00 to 1.20 in steps of 0.05
	MESSAGE	THERM PROT 1 TRIP TIME CONST: 45 min	Range: 0 to 1000 minutes in steps of 1
	MESSAGE	THERM PROT 1 RESET TIME CONST: 45 min	Range: 0 to 1000 minutes in steps of 1
	MESSAGE	THERM PROT 1 MINIM RESET TIME: 20 min	Range: 0 to 1000 minutes in steps of 1
	MESSAGE	THERM PROT 1 RESET: Off	Range: FlexLogic operand
	MESSAGE	THERM PROT 1 BLOCK: Off	Range: FlexLogic operand
	MESSAGE	THERMAL PROTECTION 1 TARGET: Self-reset	Range: Self-reset, Latched, Disabled
	MESSAGE	THERMAL PROTECTION 1 EVENTS: Disabled	Range: Disabled, Enabled

The thermal overload protection element corresponds to the IEC 255-8 standard and is used to detect thermal overload conditions in protected power system elements. Choosing an appropriate time constant element can be used to protect different elements of the power system. The cold curve characteristic is applied when the estimated I_p current is less than 10% of the base current. If I_p current is greater or equal than 10% than the base current, then the hot curve characteristic is applied. I_p current is estimated with a fixed time constant for both cooling and heating that reaches to the final value in two seconds on a step change (either step up or step down) signal.

The IEC255-8 cold curve is defined as follows:

$$t_{op} = \tau_{op} \times \ln\left(\frac{I^2}{I^2 - (kI_B)^2}\right) \quad \textbf{(EQ 5.22)}$$

The IEC255-8 hot curve is defined as follows:

$$t_{op} = \tau_{op} \times \ln\left(\frac{I^2 - I_p^2}{I^2 - (kI_B)^2}\right) \quad \textbf{(EQ 5.23)}$$

In the above equations,

- t_{op} = time to operate
- τ_{op} = thermal protection trip time constant
- I = measured overload RMS current
- I_p = measured load RMS current before overload occurs
- k= IEC 255-8 k-factor applied to I_B, defining maximum permissible current above nominal current

- I_B = protected element base (nominal) current

To ensure element accuracy for high overcurrent conditions, the maximum value of I/(k x I_B) is limited to 8, even when realistically it is exceeding this value.

The reset time of the thermal overload protection element is also time delayed using following formula:

$$t_{rst} = \tau_{rst} \times \ln\left(\frac{(kI_B)^2}{\left|I^2 - (kI_B)^2\right|}\right) + T_{min} \quad \textbf{(EQ 5.24)}$$

In the above equation,

- τ_{rst} = thermal protection trip time constant
- T_{min} is a minimum reset time setting

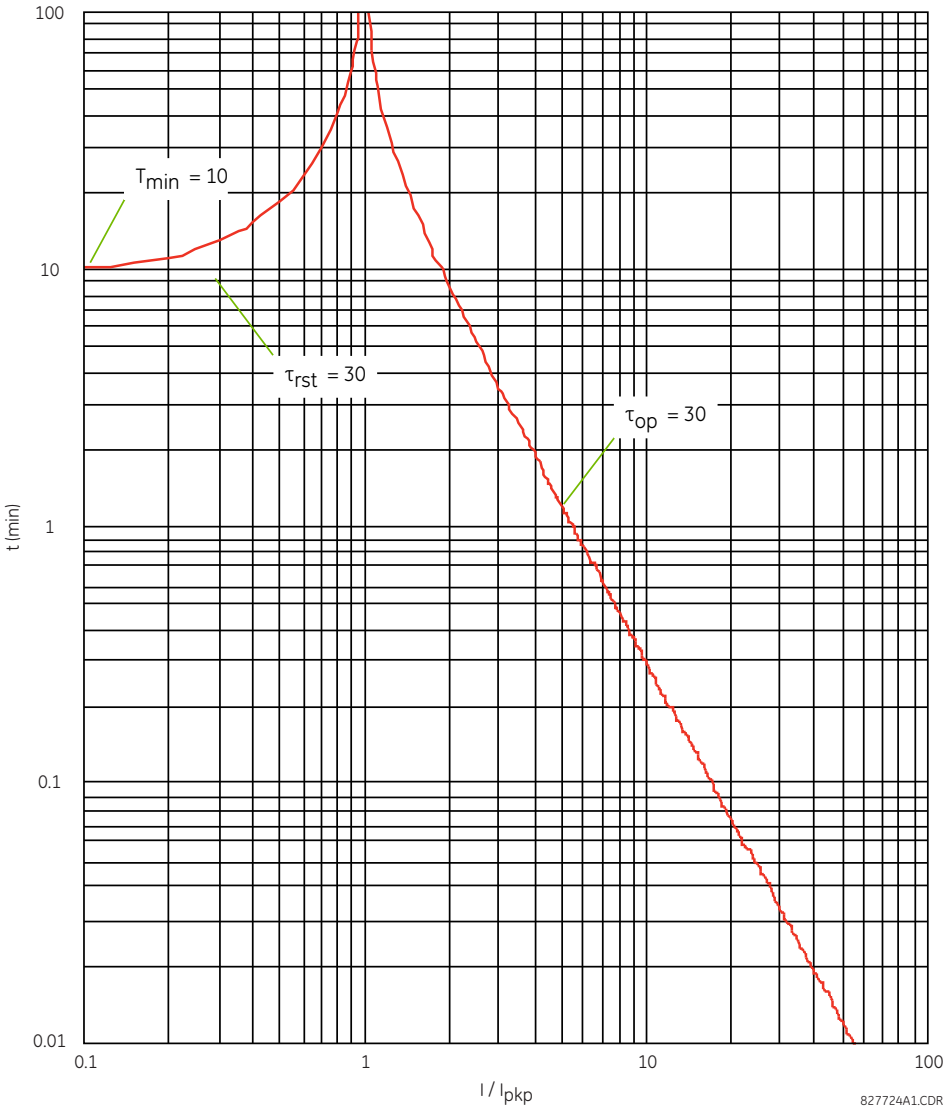

Figure 5–112: IEC 255-8 SAMPLE OPERATE AND RESET CURVES

The thermal overload protection element estimates accumulated thermal energy *E* using the following equations calculated each power cycle. When current is greater than the pickup level, $I_n > k \times I_B$, element starts increasing the thermal energy:

$$E_n = E_{n-1} + \frac{\Delta t}{t_{op(In)}} \quad \textbf{(EQ 5.25)}$$

When current is less than the dropout level, $I_n > 0.97 \times k \times I_B$, the element starts decreasing the thermal energy:

$$E_n = E_{n-1} - \frac{\Delta t}{t_{rst(In)}} \quad \textbf{(EQ 5.26)}$$

In the above equations,

- Δt is the power cycle duration
- n is the power cycle index
- $t_{op(In)}$ is the trip time calculated at index n as per the IEC255-8 cold curve or hot curve equations
- $t_{rst(In)}$ is the reset time calculated at index n as per the reset time equation
- I_n is the measured overload RMS current at index n
- E_n is the accumulated energy at index n
- E_{n-1} is the accumulated energy at index $n - 1$

The thermal overload protection element removes the THERMAL PROT 1 OP output operand when $E < 0.05$. In case of emergency, the thermal memory and THERMAL PROT 1 OP output operand can be reset using **THERM PROT 1 RESET** setting. All calculations are performed per phase. If the accumulated energy reaches value 1 in any phase, the thermal overload protection element operates and only resets when energy is less than 0.05 in all three phases.

Table 5–32: TYPICAL TIME CONSTANTS

PROTECTED EQUIPMENT	TIME CONSTANT	MINIMUM RESET TIME
Capacitor bank	10 minutes	30 minutes
Overhead line	10 minutes	20 minutes
Air-core reactor	40 minutes	30 minutes
Busbar	60 minutes	20 minutes
Underground cable	20 to 60 minutes	60 minutes

The logic for the thermal overload protection element is shown below.

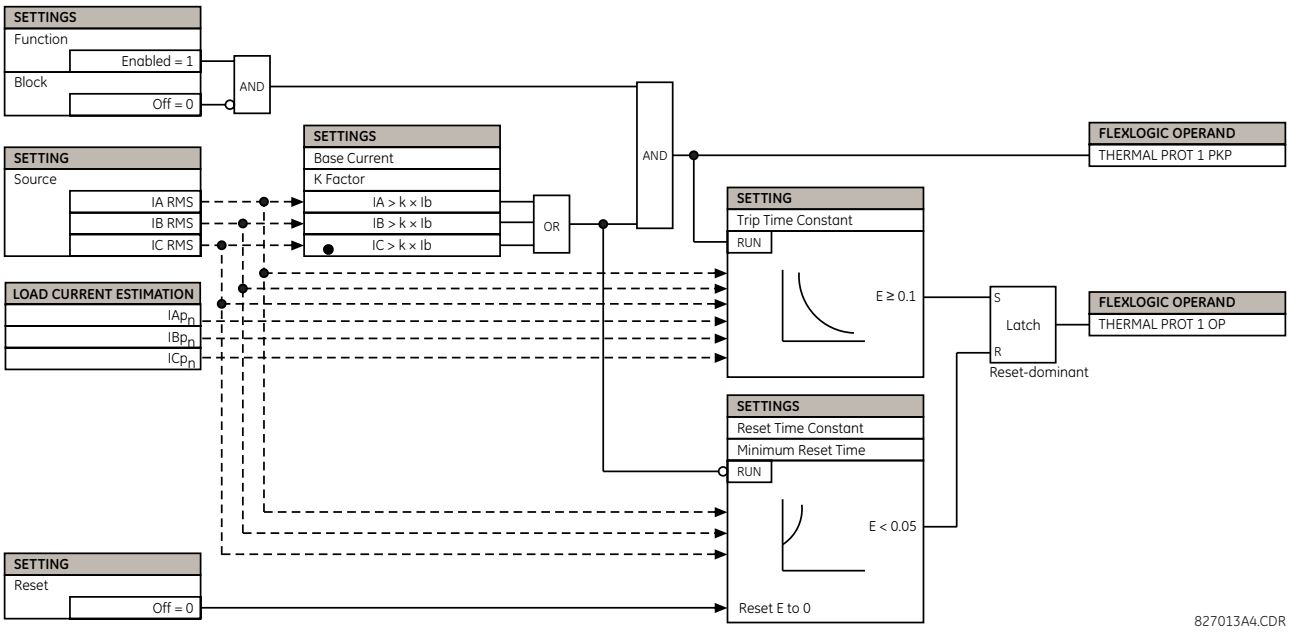

Figure 5–113: THERMAL OVERLOAD PROTECTION SCHEME LOGIC

PATH: SETTINGS ⇨⇩ INPUTS/OUTPUTS ⇨ CONTACT INPUTS

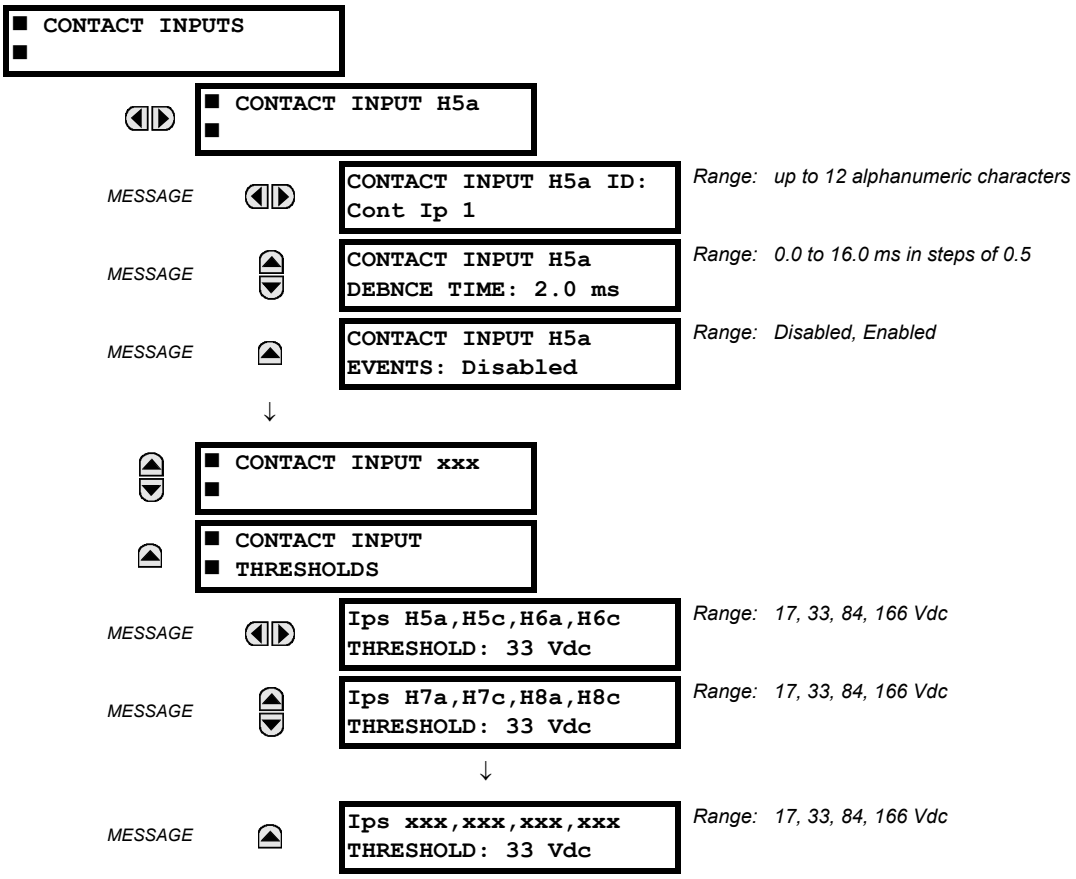

The contact inputs menu contains configuration settings for each contact input as well as voltage thresholds for each group of four contact inputs. Upon startup, the relay processor determines (from an assessment of the installed modules) which contact inputs are available and then display settings for only those inputs.

An alphanumeric ID may be assigned to a contact input for diagnostic, setting, and event recording purposes. The CONTACT IP X On" (Logic 1) FlexLogic operand corresponds to contact input "X" being closed, while CONTACT IP X Off corresponds to contact input "X" being open. The **CONTACT INPUT DEBNCE TIME** defines the time required for the contact to overcome 'contact bouncing' conditions. As this time differs for different contact types and manufacturers, set it as a maximum contact debounce time (per manufacturer specifications) plus some margin to ensure proper operation. If **CONTACT INPUT EVENTS** is set to "Enabled", every change in the contact input state will trigger an event.

A raw status is scanned for all Contact Inputs synchronously at the constant rate of 0.5 ms as shown in the figure below. The DC input voltage is compared to a user-settable threshold. A new contact input state must be maintained for a user-settable debounce time in order for the C70 to validate the new contact state. In the figure below, the debounce time is set at 2.5 ms; thus the 6th sample in a row validates the change of state (mark no. 1 in the diagram). Once validated (debounced), the contact input asserts a corresponding FlexLogic operand and logs an event as per user setting.

A time stamp of the first sample in the sequence that validates the new state is used when logging the change of the contact input into the Event Recorder (mark no. 2 in the diagram).

Protection and control elements, as well as FlexLogic equations and timers, are executed eight times in a power system cycle. The protection pass duration is controlled by the frequency tracking mechanism. The FlexLogic operand reflecting the debounced state of the contact is updated at the protection pass following the validation (marks no. 3 and 4 on the figure below). The update is performed at the beginning of the protection pass so all protection and control functions, as well as FlexLogic equations, are fed with the updated states of the contact inputs.

The FlexLogic operand response time to the contact input change is equal to the debounce time setting plus up to one protection pass (variable and depending on system frequency if frequency tracking enabled). If the change of state occurs just after a protection pass, the recognition is delayed until the subsequent protection pass; that is, by the entire duration of the protection pass. If the change occurs just prior to a protection pass, the state is recognized immediately. Statistically a delay of half the protection pass is expected. Owing to the 0.5 ms scan rate, the time resolution for the input contact is below 1msec.

For example, 8 protection passes per cycle on a 60 Hz system correspond to a protection pass every 2.1 ms. With a contact debounce time setting of 3.0 ms, the FlexLogic operand-assert time limits are: 3.0 + 0.0 = 3.0 ms and 3.0 + 2.1 = 5.1 ms. These time limits depend on how soon the protection pass runs after the debouncing time.

Regardless of the contact debounce time setting, the contact input event is time-stamped with a 1 µs accuracy using the time of the first scan corresponding to the new state (mark no. 2 below). Therefore, the time stamp reflects a change in the DC voltage across the contact input terminals that was not accidental as it was subsequently validated using the debounce timer. Keep in mind that the associated FlexLogic operand is asserted/de-asserted later, after validating the change.

The debounce algorithm is symmetrical: the same procedure and debounce time are used to filter the LOW-HIGH (marks no.1, 2, 3, and 4 in the figure below) and HIGH-LOW (marks no. 5, 6, 7, and 8 below) transitions.

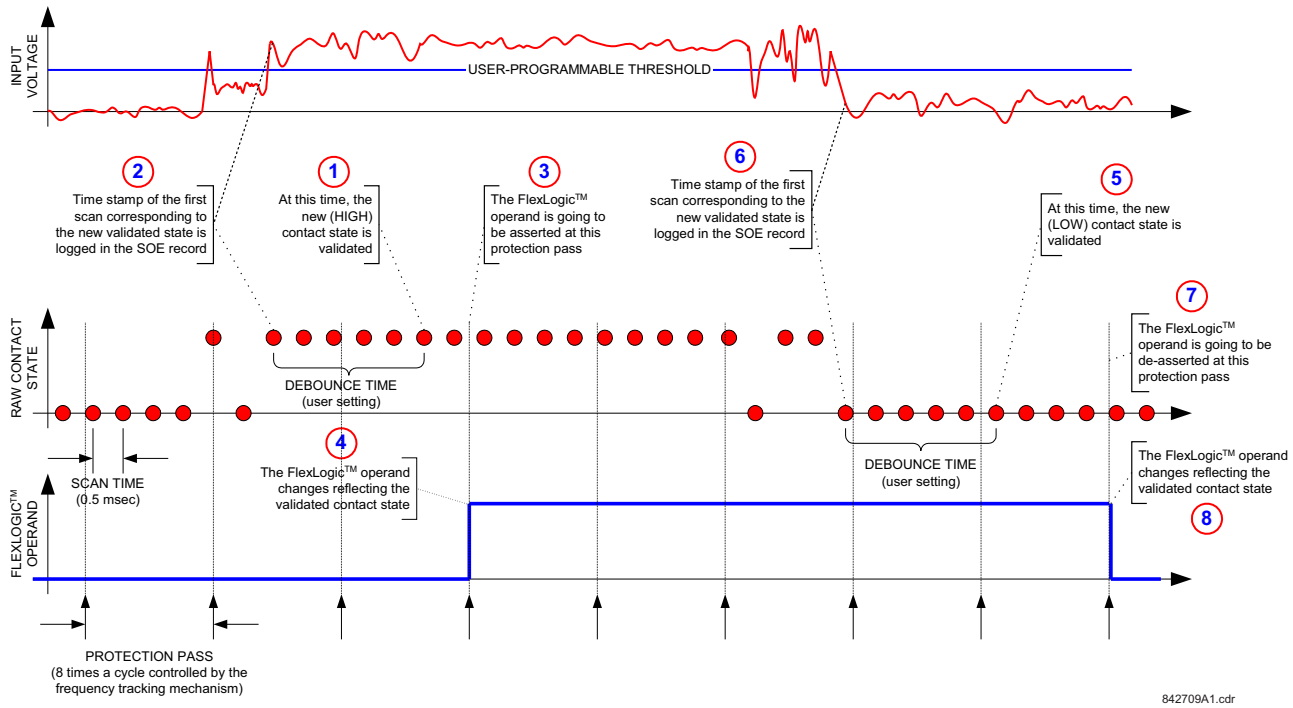

Figure 5–114: INPUT CONTACT DEBOUNCING MECHANISM AND TIME-STAMPING SAMPLE TIMING

Contact inputs are isolated in groups of four to allow connection of wet contacts from different voltage sources for each group. The **CONTACT INPUT THRESHOLDS** determine the minimum voltage required to detect a closed contact input. This value should be selected according to the following criteria: 17 for 24 V sources, 33 for 48 V sources, 84 for 110 to 125 V sources and 166 for 250 V sources.

For example, to use contact input H5a as a status input from the breaker 52b contact to seal-in the trip relay and record it in the Event Records menu, make the following settings changes:

CONTACT INPUT H5A ID: "Breaker Closed (52b)"
CONTACT INPUT H5A EVENTS: "Enabled"

Note that the 52b contact is closed when the breaker is open and open when the breaker is closed.

PATH: SETTINGS ⇨⇩ INPUTS/OUTPUTS ⇨⇩ VIRTUAL INPUTS ⇨ VIRTUAL INPUT 1(64)

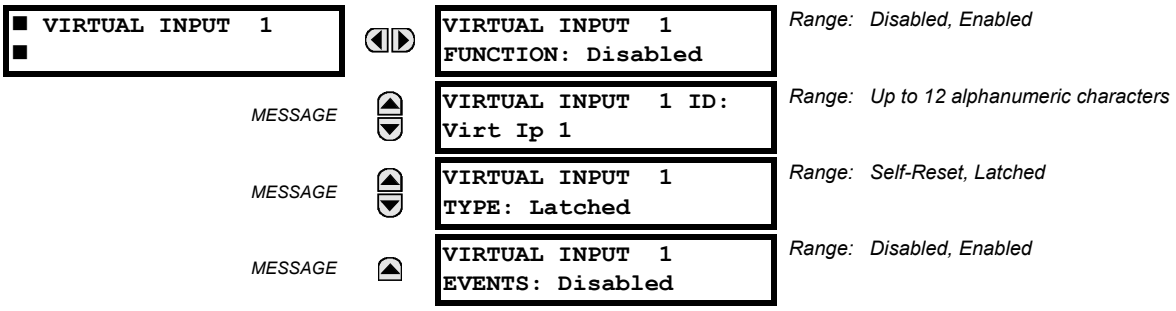

There are 64 virtual inputs that can be individually programmed to respond to input signals from the keypad (via the COMMANDS menu) and communications protocols. All virtual input operands are defaulted to "Off" (logic 0) unless the appropriate input signal is received.

If the **VIRTUAL INPUT x FUNCTION** is to "Disabled", the input will be forced to off (logic 0) regardless of any attempt to alter the input. If set to "Enabled", the input operates as shown on the logic diagram and generates output FlexLogic operands in response to received input signals and the applied settings.

There are two types of operation: self-reset and latched. If **VIRTUAL INPUT x TYPE** is "Self-Reset", when the input signal transits from off to on, the output operand will be set to on for only one evaluation of the FlexLogic equations and then return to off. If set to "Latched", the virtual input sets the state of the output operand to the same state as the most recent received input.

NOTE

The self-reset operating mode generates the output operand for a single evaluation of the FlexLogic equations. If the operand is to be used anywhere other than internally in a FlexLogic equation, it will likely have to be lengthened in time. A FlexLogic timer with a delayed reset can perform this function.

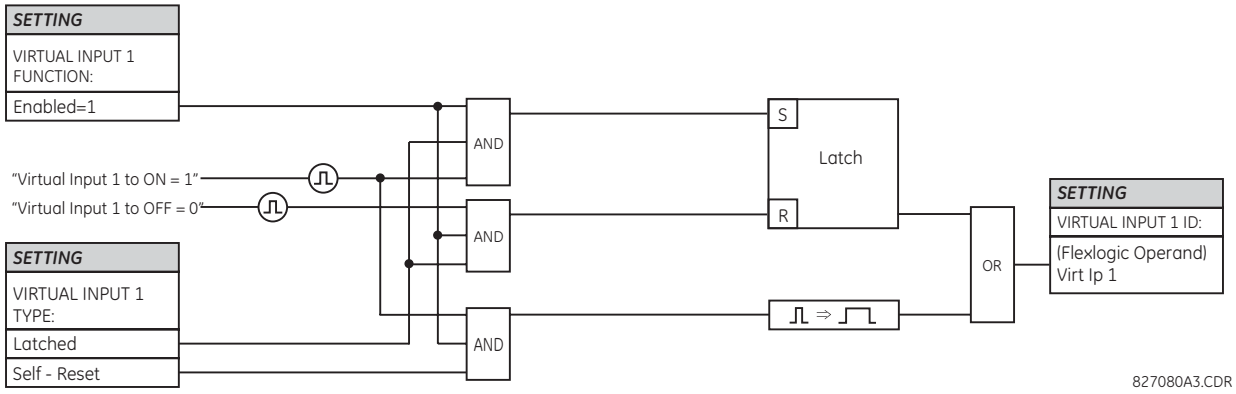

Figure 5–115: VIRTUAL INPUTS SCHEME LOGIC

a) DIGITAL OUTPUTS

PATH: SETTINGS ⇨⇩ INPUTS/OUTPUTS ⇨⇩ CONTACT OUTPUTS ⇨ CONTACT OUTPUT H1(H64)

```
■ CONTACT OUTPUT H1
■
```

```
CONTACT OUTPUT H1 ID
Cont Op 1
```

Range: Up to 12 alphanumeric characters

MESSAGE

```
OUTPUT H1 OPERATE:
Off
```

Range: FlexLogic operand

MESSAGE

```
OUTPUT H1 SEAL-IN:
Off
```

Range: FlexLogic operand

MESSAGE

```
CONTACT OUTPUT H1
EVENTS: Enabled
```

Range: Disabled, Enabled

Upon startup of the relay, the main processor determines from an assessment of the modules installed in the chassis which contact outputs are available and presents the settings for only these outputs. Where the contact input is non-latching, the settings are as shown.

An ID may be assigned to each contact output. The signal that can **OPERATE** a contact output may be any FlexLogic operand (virtual output, element state, contact input, or virtual input). An additional FlexLogic operand may be used to **SEAL-IN** the relay. Any change of state of a contact output can be logged as an Event if programmed to do so.

For example, the trip circuit current is monitored by providing a current threshold detector in series with some Form-A contacts (see the trip circuit example in the Digital Elements section). The monitor sets a flag (see the specifications for Form-A). The name of the FlexLogic operand set by the monitor, consists of the output relay designation, followed by the name of the flag; for example, CONT OP 1 ION.

In most breaker control circuits, the trip coil is connected in series with a breaker auxiliary contact used to interrupt current flow after the breaker has tripped, to prevent damage to the less robust initiating contact. This can be done by monitoring an auxiliary contact on the breaker which opens when the breaker has tripped, but this scheme is subject to incorrect operation caused by differences in timing between breaker auxiliary contact change-of-state and interruption of current in the trip circuit. The most dependable protection of the initiating contact is provided by directly measuring current in the tripping circuit, and using this parameter to control resetting of the initiating relay. This scheme is often called *trip seal-in*.

This can be realized using the CONT OP 1 ION FlexLogic operand to seal-in the contact output as follows:

CONTACT OUTPUT H1 ID: "Cont Op 1"
OUTPUT H1 OPERATE: *any suitable FlexLogic operand*
OUTPUT H1 SEAL-IN: "Cont Op 1 IOn"
CONTACT OUTPUT H1 EVENTS: "Enabled"

Figure 5–116: CONTACT INPUT/OUTPUT MODULE TYPE 6A CONTACT 1 LOGIC

b) LATCHING OUTPUTS

PATH: SETTINGS ⇨⇩ INPUTS/OUTPUTS ⇨⇩ CONTACT OUTPUTS ⇨ CONTACT OUTPUT H1a

```
■ CONTACT OUTPUT H1a
■
```

```
OUTPUT H1a ID
L-Cont Op 1
```

Range: Up to 12 alphanumeric characters

MESSAGE
OUTPUT H1a OPERATE:
Off
Range: FlexLogic operand

MESSAGE
OUTPUT H1a RESET:
Off
Range: FlexLogic operand

MESSAGE
OUTPUT H1a TYPE:
Operate-dominant
Range: Operate-dominant, Reset-dominant

MESSAGE
OUTPUT H1a EVENTS:
Disabled
Range: Disabled, Enabled

The latching output contacts are mechanically bi-stable and controlled by two separate (open and close) coils. As such they retain their position even if the relay is not powered up. The relay recognizes all latching output contact cards and populates the setting menu accordingly. On power up, the relay reads positions of the latching contacts from the hardware before executing any other functions of the relay (such as protection and control features or FlexLogic).

The latching output modules, either as a part of the relay or as individual modules, are shipped from the factory with all latching contacts opened. It is highly recommended to double-check the programming and positions of the latching contacts when replacing a module.

Since the relay asserts the output contact and reads back its position, it is possible to incorporate self-monitoring capabilities for the latching outputs. If any latching outputs exhibits a discrepancy, the **LATCHING OUTPUT ERROR** self-test error is declared. The error is signaled by the LATCHING OUT ERROR FlexLogic operand, event, and target message.

- **OUTPUT H1a OPERATE**: This setting specifies a FlexLogic operand to operate the 'close coil' of the contact. The relay will seal-in this input to safely close the contact. Once the contact is closed and the **RESET** input is logic 0 (off), any activity of the **OPERATE** input, such as subsequent chattering, will not have any effect. With both the **OPERATE** and **RESET** inputs active (logic 1), the response of the latching contact is specified by the **OUTPUT H1A TYPE** setting.
- **OUTPUT H1a RESET**: This setting specifies a FlexLogic operand to operate the 'trip coil' of the contact. The relay will seal-in this input to safely open the contact. Once the contact is opened and the **OPERATE** input is logic 0 (off), any activity of the **RESET** input, such as subsequent chattering, will not have any effect. With both the **OPERATE** and **RESET** inputs active (logic 1), the response of the latching contact is specified by the **OUTPUT H1A TYPE** setting.
- **OUTPUT H1a TYPE**: This setting specifies the contact response under conflicting control inputs; that is, when both the **OPERATE** and **RESET** signals are applied. With both control inputs applied simultaneously, the contact will close if set to "Operate-dominant" and will open if set to "Reset-dominant".

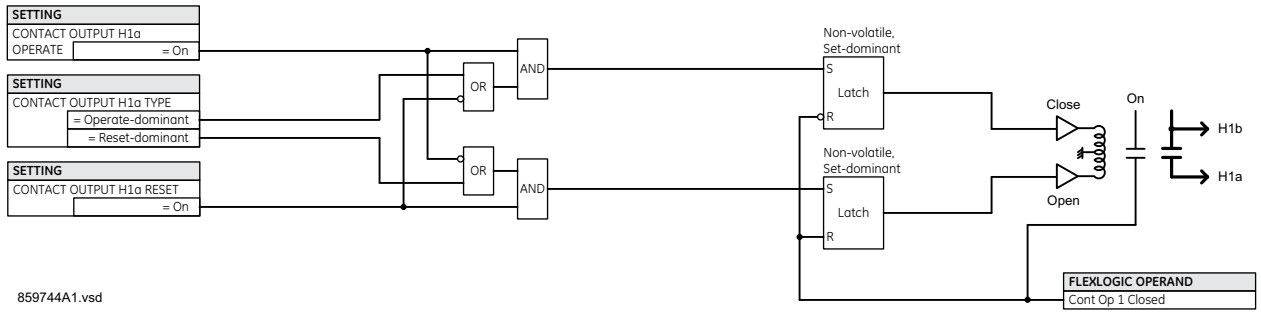

Figure 5–117: CONTACT INPUT/OUTPUT MODULE TYPE 4L CONTACT 1 LOGIC

Application Example 1:

A latching output contact H1a is to be controlled from two user-programmable pushbuttons (buttons number 1 and 2). The following settings should be applied.

Program the Latching Outputs by making the following changes in the **SETTINGS** ⇨⇩ **INPUTS/OUTPUTS** ⇨⇩ **CONTACT OUTPUTS** ⇨ **CONTACT OUTPUT H1a** menu (assuming an H4L module):

OUTPUT H1a OPERATE: "PUSHBUTTON 1 ON"
OUTPUT H1a RESET: "PUSHBUTTON 2 ON"

Program the pushbuttons by making the following changes in the **PRODUCT SETUP ⇨⇩ USER-PROGRAMMABLE PUSHBUTTONS ⇨⇩ USER PUSHBUTTON 1** and **USER PUSHBUTTON 2** menus:

PUSHBUTTON 1 FUNCTION: "Self-reset"
PUSHBTN 1 DROP-OUT TIME: "0.00 s"

PUSHBUTTON 2 FUNCTION: "Self-reset"
PUSHBTN 2 DROP-OUT TIME: "0.00 s"

Application Example 2:

A relay, having two latching contacts H1a and H1c, is to be programmed. The H1a contact is to be a Type-a contact, while the H1c contact is to be a Type-b contact (Type-a means closed after exercising the operate input; Type-b means closed after exercising the reset input). The relay is to be controlled from virtual outputs: VO1 to operate and VO2 to reset.

Program the Latching Outputs by making the following changes in the **SETTINGS ⇨⇩ INPUTS/OUTPUTS ⇨⇩ CONTACT OUTPUTS ⇨ CONTACT OUTPUT H1a** and **CONTACT OUTPUT H1c** menus (assuming an H4L module):

OUTPUT H1a OPERATE: "VO1"
OUTPUT H1a RESET: "VO2"

OUTPUT H1c OPERATE: "VO2"
OUTPUT H1c RESET: "VO1"

Since the two physical contacts in this example are mechanically separated and have individual control inputs, they will not operate at exactly the same time. A discrepancy in the range of a fraction of a maximum operating time may occur. Therefore, a pair of contacts programmed to be a multi-contact relay will not guarantee any specific sequence of operation (such as make before break). If required, the sequence of operation must be programmed explicitly by delaying some of the control inputs as shown in the next application example.

Application Example 3:

A make before break functionality must be added to the preceding example. An overlap of 20 ms is required to implement this functionality as described below:

Write the following FlexLogic equation (EnerVista UR Setup example shown):

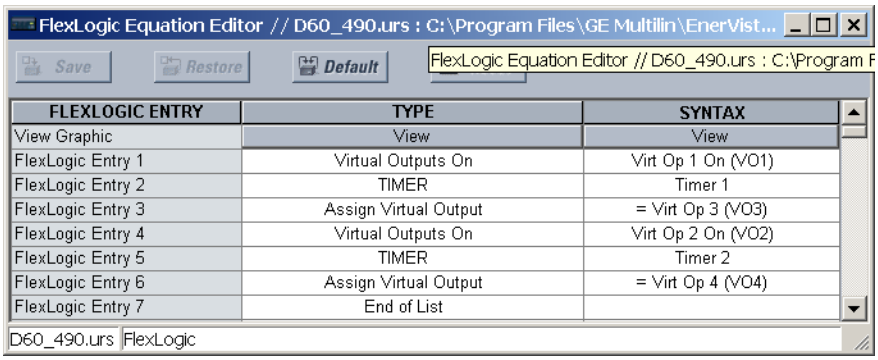

Both timers (Timer 1 and Timer 2) should be set to 20 ms pickup and 0 ms dropout.

Program the Latching Outputs by making the following changes in the **SETTINGS ⇨⇩ INPUTS/OUTPUTS ⇨⇩ CONTACT OUTPUTS ⇨ CONTACT OUTPUT H1a** and **CONTACT OUTPUT H1c** menus (assuming an H4L module):

OUTPUT H1a OPERATE: "VO1"
OUTPUT H1a RESET: "VO4"

OUTPUT H1c OPERATE: "VO2"
OUTPUT H1c RESET: "VO3"

Application Example 4:

A latching contact H1a is to be controlled from a single virtual output VO1. The contact should stay closed as long as VO1 is high, and should stay opened when VO1 is low. Program the relay as follows.

Write the following FlexLogic equation (EnerVista UR Setup example shown):

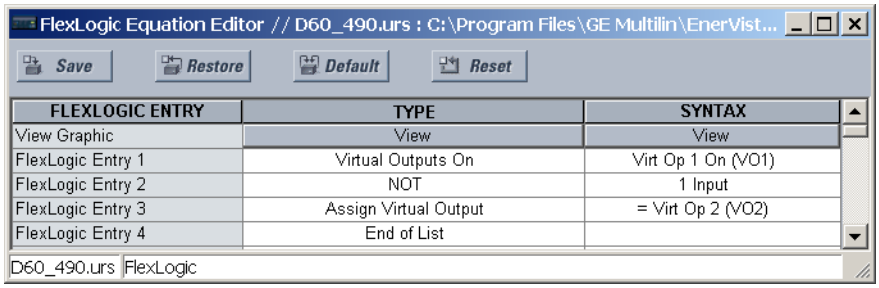

Program the Latching Outputs by making the following changes in the **SETTINGS ⇨⇩ INPUTS/OUTPUTS ⇨⇩ CONTACT OUTPUTS ⇨ CONTACT OUTPUT H1a** menu (assuming an H4L module):

OUTPUT H1a OPERATE: "VO1"
OUTPUT H1a RESET: "VO2"

5.8.4 VIRTUAL OUTPUTS

PATH: SETTINGS ⇨⇩ INPUTS/OUTPUTS ⇨⇩ VIRTUAL OUTPUTS ⇨ VIRTUAL OUTPUT 1(96)

```
VIRTUAL OUTPUT  1
```

```
VIRTUAL OUTPUT  1 ID
Virt Op 1
```

Range: Up to 12 alphanumeric characters

MESSAGE

```
VIRTUAL OUTPUT  1
EVENTS: Disabled
```

Range: Disabled, Enabled

There are 96 virtual outputs that may be assigned via FlexLogic. If not assigned, the output will be forced to 'OFF' (Logic 0). An ID may be assigned to each virtual output. Virtual outputs are resolved in each pass through the evaluation of the FlexLogic equations. Any change of state of a virtual output can be logged as an event if programmed to do so.

For example, if Virtual Output 1 is the trip signal from FlexLogic and the trip relay is used to signal events, the settings would be programmed as follows:

VIRTUAL OUTPUT 1 ID: "Trip"
VIRTUAL OUTPUT 1 EVENTS: "Disabled"

5.8.5 REMOTE DEVICES

a) REMOTE INPUTS/OUTPUTS OVERVIEW

Remote inputs and outputs provide a means of exchanging digital state information between Ethernet-networked devices. The IEC 61850 GSSE (Generic Substation State Event) and GOOSE (Generic Object Oriented Substation Event) standards are used.

The sharing of digital point state information between GSSE/GOOSE equipped relays is essentially an extension to FlexLogic, allowing distributed FlexLogic by making operands available to/from devices on a common communications network. In addition to digital point states, GSSE/GOOSE messages identify the originator of the message and provide other information required by the communication specification. All devices listen to network messages and capture data only from messages that have originated in selected devices.

IEC 61850 GSSE messages are compatible with UCA GOOSE messages and contain a fixed set of digital points. IEC 61850 GOOSE messages can, in general, contain any configurable data items. When used by the remote input/output feature, IEC 61850 GOOSE messages contain the same data as GSSE messages.

Both GSSE and GOOSE messages are designed to be short, reliable, and high priority. GOOSE messages have additional advantages over GSSE messages due to their support of VLAN (virtual LAN) and Ethernet priority tagging functionality. The GSSE message structure contains space for 128 bit pairs representing digital point state information. The IEC 61850 specification provides 32 "DNA" bit pairs that represent the state of two pre-defined events and 30 user-defined events. All remaining bit pairs are "UserSt" bit pairs, which are status bits representing user-definable events. The C70 implementation provides 32 of the 96 available UserSt bit pairs.

The IEC 61850 specification includes features that are used to cope with the loss of communication between transmitting and receiving devices. Each transmitting device will send a GSSE/GOOSE message upon a successful power-up, when the state of any included point changes, or after a specified interval (the *default update* time) if a change-of-state has not occurred. The transmitting device also sends a 'hold time' which is set greater than four times the programmed default time required by the receiving device.

Receiving devices are constantly monitoring the communications network for messages they require, as recognized by the identification of the originating device carried in the message. Messages received from remote devices include the message *time allowed to live*. The receiving relay sets a timer assigned to the originating device to this time interval, and if it has not received another message from this device at time-out, the remote device is declared to be non-communicating, so it will use the programmed default state for all points from that specific remote device. If a message is received from a remote device before the *time allowed to live* expires, all points for that device are updated to the states contained in the message and the hold timer is restarted. The status of a remote device, where "Offline" indicates non-communicating, can be displayed.

The remote input/output facility provides for 32 remote inputs and 64 remote outputs.

b) LOCAL DEVICES: ID OF DEVICE FOR TRANSMITTING GSSE MESSAGES

In a C70 relay, the device ID that represents the IEC 61850 GOOSE application ID (GoID) name string sent as part of each GOOSE message is programmed in the **SETTINGS ⇨ PRODUCT SETUP ⇨⇩ COMMUNICATIONS ⇨⇩ IEC 61850 PROTOCOL ⇨ GSSE/GOOSE CONFIGURATION ⇨ TRANSMISSION ⇨⇩ FIXED GOOSE ⇨⇩ GOOSE ID** setting.

Likewise, the device ID that represents the IEC 61850 GSSE application ID name string sent as part of each GSSE message is programmed in the **SETTINGS ⇨ PRODUCT SETUP ⇨⇩ COMMUNICATIONS ⇨⇩ IEC 61850 PROTOCOL ⇨ GSSE/GOOSE CONFIGURATION ⇨ TRANSMISSION ⇨⇩ GSSE ⇨⇩ GSSE ID** setting.

In C70 releases previous to 5.0x, these name strings were represented by the **RELAY NAME** setting.

c) REMOTE DEVICES: ID OF DEVICE FOR RECEIVING GSSE/GOOSE MESSAGES

PATH: SETTINGS ⇨⇩ INPUTS/OUTPUTS ⇨⇩ REMOTE DEVICES ⇨ REMOTE DEVICE 1(16)

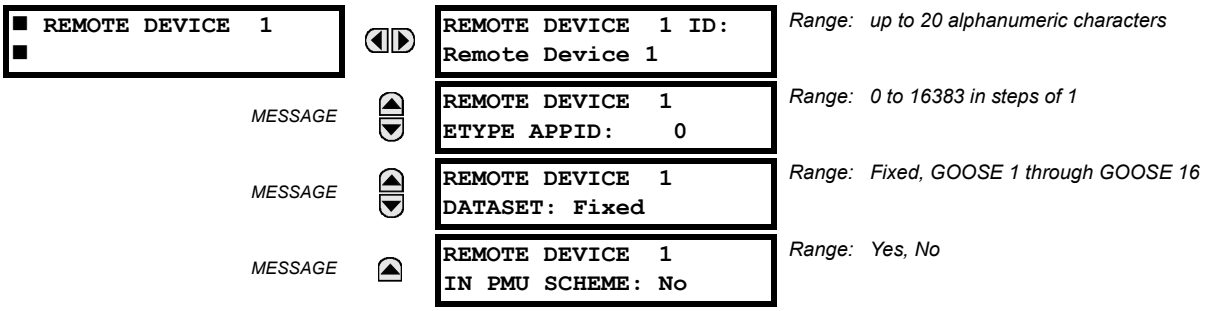

Remote devices are available for setting purposes. A receiving relay must be programmed to capture messages from only those originating remote devices of interest. This setting is used to select specific remote devices by entering (bottom row) the exact identification (ID) assigned to those devices.

The **REMOTE DEVICE 1 ETYPE APPID** setting is only used with GOOSE messages; they are not applicable to GSSE messages. This setting identifies the Ethernet application identification in the GOOSE message. It should match the corresponding settings on the sending device.

The **REMOTE DEVICE 1 DATASET** setting provides for the choice of the C70 fixed (DNA/UserSt) dataset (that is, containing DNA and UserSt bit pairs), or one of the configurable datasets.

Note that the dataset for the received data items must be made up of existing items in an existing logical node. For this reason, logical node GGIO3 is instantiated to hold the incoming data items. GGIO3 is not necessary to make use of the received data. The remote input data item mapping takes care of the mapping of the inputs to remote input FlexLogic operands. However, GGIO3 data can be read by IEC 61850 clients.

5

5.8.6 REMOTE INPUTS

PATH: SETTINGS ⇨⇩ INPUTS/OUTPUTS ⇨⇩ REMOTE INPUTS ⇨ REMOTE INPUT 1(32)

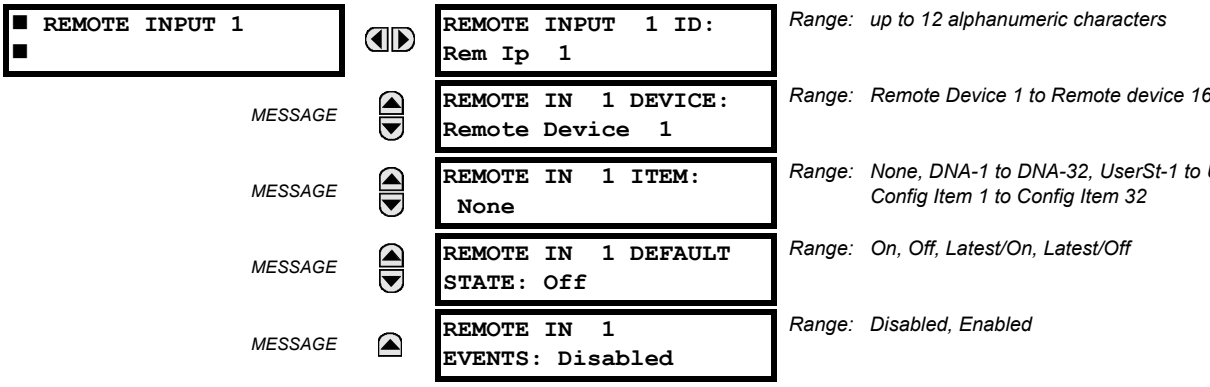

Remote Inputs that create FlexLogic operands at the receiving relay are extracted from GSSE/GOOSE messages originating in remote devices. Each remote input can be selected from a list consisting of: DNA-1 through DNA-32, UserSt-1 through UserSt-32, and Dataset Item 1 through Dataset Item 32. The function of DNA inputs is defined in the IEC 61850 specification and is presented in the IEC 61850 DNA Assignments table in the Remote Outputs section. The function of UserSt inputs is defined by the user selection of the FlexLogic operand whose state is represented in the GSSE/GOOSE message. A user must program a DNA point from the appropriate FlexLogic operand.

Remote input 1 must be programmed to replicate the logic state of a specific signal from a specific remote device for local use. This programming is performed via the three settings shown above.

The **REMOTE INPUT 1 ID** setting allows the user to assign descriptive text to the remote input. The **REMOTE IN 1 DEVICE** setting selects the remote device which originates the required signal, as previously assigned to the remote device via the setting **REMOTE DEVICE (16) ID** (see the Remote Devices section). The **REMOTE IN 1 ITEM** setting selects the specific bits of the GSSE/GOOSE message required.

The **REMOTE IN 1 DEFAULT STATE** setting selects the logic state for this point if the local relay has just completed startup or the remote device sending the point is declared to be non-communicating. The following choices are available:

- Setting **REMOTE IN 1 DEFAULT STATE** to "On" value defaults the input to logic 1.
- Setting **REMOTE IN 1 DEFAULT STATE** to "Off" value defaults the input to logic 0.
- Setting **REMOTE IN 1 DEFAULT STATE** to "Latest/On" freezes the input in case of lost communications. If the latest state is not known, such as after relay power-up but before the first communication exchange, the input will default to logic 1. When communication resumes, the input becomes fully operational.
- Setting **REMOTE IN 1 DEFAULT STATE** to "Latest/Off" freezes the input in case of lost communications. If the latest state is not known, such as after relay power-up but before the first communication exchange, the input will default to logic 0. When communication resumes, the input becomes fully operational.

NOTE

For additional information on GSSE/GOOOSE messaging, see the Remote Devices section in this chapter.

5.8.7 REMOTE DOUBLE-POINT STATUS INPUTS

PATH: SETTINGS ⇨⇩ INPUTS/OUTPUTS ⇨⇩ REMOTE DPS INPUTS ⇨ REMOTE DPS INPUT 1(5)

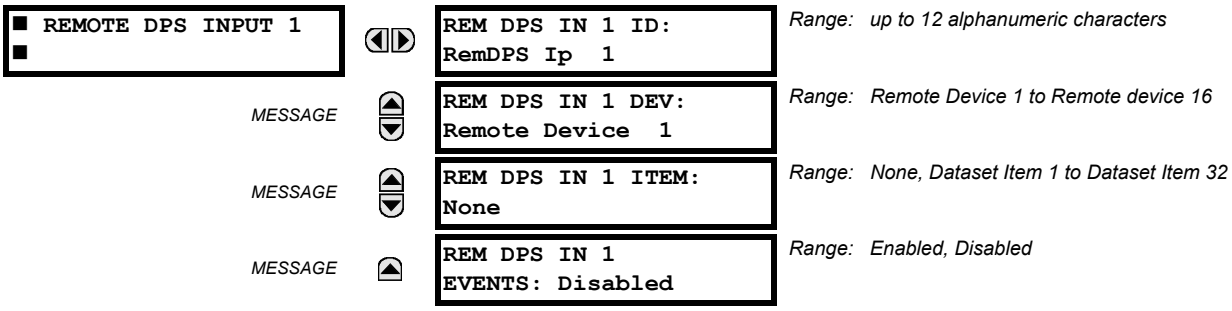

Remote double-point status inputs are extracted from GOOSE messages originating in the remote device. Each remote double point status input must be programmed to replicate the logic state of a specific signal from a specific remote device for local use. This functionality is accomplished with the five remote double-point status input settings.

- **REM DPS IN 1 ID**: This setting assigns descriptive text to the remote double-point status input.
- **REM DPS IN 1 DEV**: This setting selects a remote device ID to indicate the origin of a GOOSE message. The range is selected from the remote device IDs specified in the Remote Devices section.
- **REM DPS IN 1 ITEM**: This setting specifies the required bits of the GOOSE message.

The configurable GOOSE dataset items must be changed to accept a double-point status item from a GOOSE dataset (changes are made in the **SETTINGS ⇨⇩ COMMUNICATION ⇨⇩ IEC 61850 PROTOCOL ⇨⇩ GSSE/GOOSE CONFIGURATION ⇨⇩ RECEPTION ⇨⇩ CONFIGURABLE GOOSE ⇨ CONFIGURABLE GOOSE 1(16) ⇨ CONFIG GSE 1 DATASET ITEMS** menus). Dataset items configured to receive any of "GGIO3.ST.IndPos1.stV" to "GGIO3.ST.IndPos5.stV" will accept double-point status information that will be decoded by the remote double-point status inputs configured to this dataset item.

The remote double point status is recovered from the received IEC 61850 dataset and is available as through the RemDPS Ip 1 BAD, RemDPS Ip 1 INTERM, RemDPS Ip 1 OFF, and RemDPS Ip 1 ON FlexLogic operands. These operands can then be used in breaker or disconnect control schemes.

5.8.8 REMOTE OUTPUTS

a) DNA BIT PAIRS

PATH: SETTINGS ⇨⇩ INPUTS/OUTPUTS ⇨⇩ REMOTE OUTPUTS DNA BIT PAIRS ⇨ REMOTE OUTPUTS DNA- 1(32) BIT PAIR

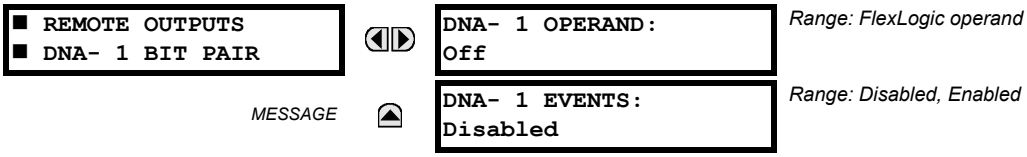

Remote outputs (1 to 32) are FlexLogic operands inserted into GSSE/GOOSE messages that are transmitted to remote devices on a LAN. Each digital point in the message must be programmed to carry the state of a specific FlexLogic operand. The above operand setting represents a specific DNA function (as shown in the following table) to be transmitted.

Table 5–33: IEC 61850 DNA ASSIGNMENTS

DNA	IEC 61850 DEFINITION	FLEXLOGIC OPERAND
1	Test	IEC 61850 TEST MODE
2	ConfRev	IEC 61850 CONF REV

b) USERST BIT PAIRS

PATH: SETTINGS ⇨⇩ INPUTS/OUTPUTS ⇨⇩ REMOTE OUTPUTS UserSt BIT PAIRS ⇨ REMOTE OUTPUTS UserSt- 1(32) BIT PAIR

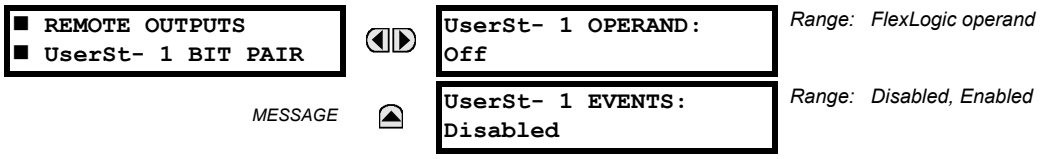

Remote outputs 1 to 32 originate as GSSE/GOOSE messages to be transmitted to remote devices. Each digital point in the message must be programmed to carry the state of a specific FlexLogic operand. The setting above is used to select the operand which represents a specific UserSt function (as selected by the user) to be transmitted.

NOTE For more information on GSSE/GOOSE messaging, see the Remote Inputs/Outputs Overview in the *Remote Devices* section.

5.8.9 RESETTING

PATH: SETTINGS ⇨⇩ INPUTS/OUTPUTS ⇨⇩ RESETTING

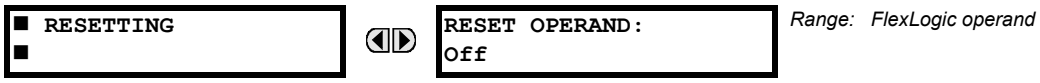

Some events can be programmed to latch the faceplate LED event indicators, target message, and/or graphical panel annunciator windows. Once set, the latching mechanism holds all of the latched indicators or messages in the set state after the initiating condition has cleared until a RESET command is received to return these latches (not including FlexLogic latches) to the reset state where the initiating condition has cleared. The RESET command can be sent from the faceplate Reset button, a remote device via a communications channel, or any selected operand.

The three sources of RESET commands each activates the RESET OP FlexLogic operand. Each individual source of a RESET command also creates its individual operand RESET OP (PUSHBUTTON), RESET OP (COMMS), or RESET OP (OPERAND) to identify the source of the command. Each of these three operands generates an event in the event record when activated. The setting shown above selects the operand that activates the RESET OP (OPERAND) operand.

a) DIRECT INPUTS

PATH: SETTINGS ⇨⇩ INPUTS/OUTPUTS ⇨⇩ DIRECT INPUTS ⇨ DIRECT INPUT 1(32)

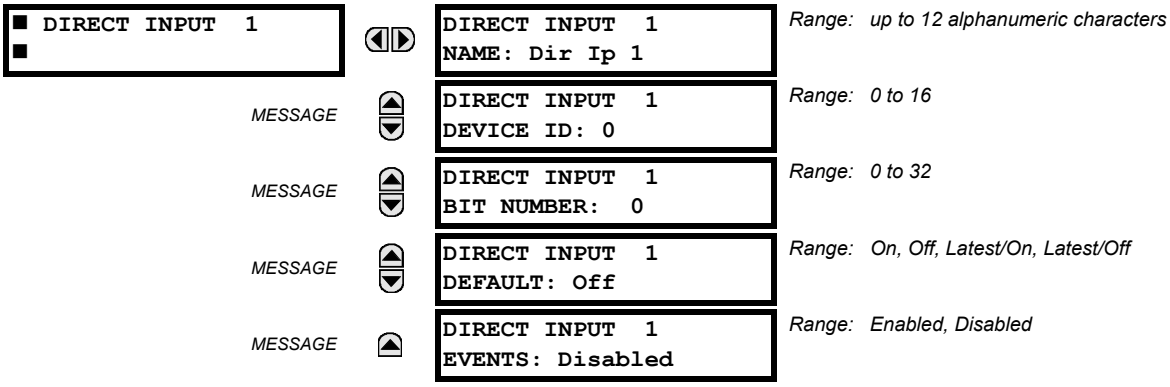

These settings specify how the direct input information is processed. The **DIRECT INPUT 1 NAME** setting allows the user to assign a descriptive name to the direct input. The **DIRECT INPUT 1 DEVICE ID** represents the source of direct input 1. The specified direct input is driven by the device identified here.

The **DIRECT INPUT 1 BIT NUMBER** is the bit number to extract the state for direct input 1. Direct Input 1 is driven by the bit identified as **DIRECT INPUT 1 BIT NUMBER**. This corresponds to the direct output number of the sending device.

DIRECT INPUT 1 DEFAULT represents the state of the direct input when the associated direct device is offline. The following choices are available:

- Setting **DIRECT INPUT 1 DEFAULT** to "On" value defaults the input to Logic 1.
- Setting **DIRECT INPUT 1 DEFAULT** to "Off" value defaults the input to Logic 0.
- Setting **DIRECT INPUT 1 DEFAULT** to "Latest/On" freezes the input in case of lost communications. If the latest state is not known, such as after relay power-up but before the first communication exchange, the input will default to Logic 1. When communication resumes, the input becomes fully operational.
- Setting **DIRECT INPUT 1 DEFAULT** to "Latest/Off" freezes the input in case of lost communications. If the latest state is not known, such as after relay power-up but before the first communication exchange, the input will default to Logic 0. When communication resumes, the input becomes fully operational.

b) DIRECT OUTPUTS

PATH: SETTINGS ⇨⇩ INPUTS/OUTPUTS ⇨⇩ DIRECT OUTPUTS ⇨ DIRECT OUTPUT 1(32)

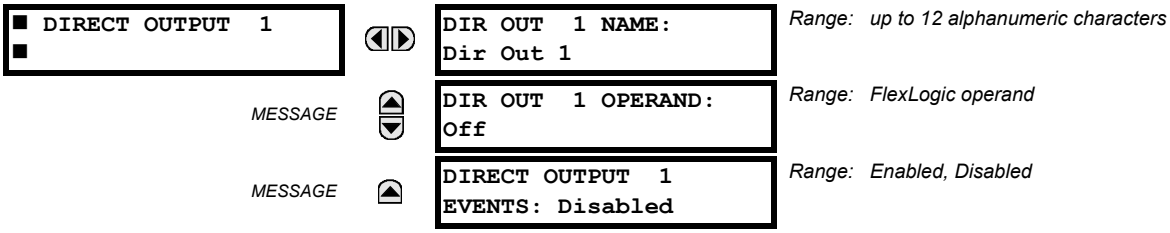

The **DIR OUT 1 NAME** setting allows the user to assign a descriptive name to the direct output. The **DIR OUT 1 OPERAND** is the FlexLogic operand that determines the state of this direct output.

c) APPLICATION EXAMPLES

The examples introduced in the earlier Direct Inputs and Outputs section (part of the Product Setup section) are continued below to illustrate usage of the direct inputs and outputs.

Example 1: Extending input/output capabilities of a C70 relay

Consider an application that requires additional quantities of contact inputs or output contacts or lines of programmable logic that exceed the capabilities of a single UR-series chassis. The problem is solved by adding an extra UR-series IED, such as the C30, to satisfy the additional inputs/outputs and programmable logic requirements. The two IEDs are connected via single-channel digital communication cards as shown below.

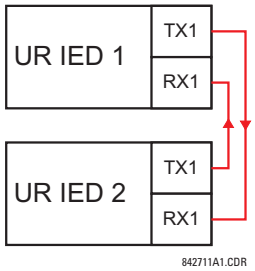

Figure 5–118: INPUT AND OUTPUT EXTENSION VIA DIRECT INPUTS AND OUTPUTS

Assume contact input 1 from UR IED 2 is to be used by UR IED 1. The following settings should be applied (Direct Input 5 and bit number 12 are used, as an example):

UR IED 1: **DIRECT INPUT 5 DEVICE ID** = “2”
DIRECT INPUT 5 BIT NUMBER = “12”

UR IED 2: **DIRECT OUT 12 OPERAND** = “Cont Ip 1 On”

The Cont Ip 1 On operand of UR IED 2 is now available in UR IED 1 as DIRECT INPUT 5 ON.

5

Example 2: Interlocking busbar protection

A simple interlocking busbar protection scheme can be accomplished by sending a blocking signal from downstream devices, say 2, 3 and 4, to the upstream device that monitors a single incomer of the busbar, as shown in the figure below.

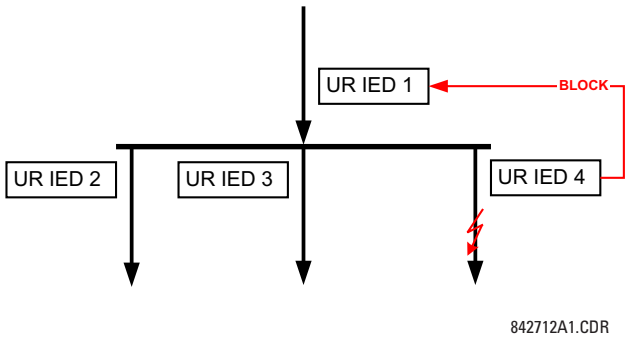

Figure 5–119: SAMPLE INTERLOCKING BUSBAR PROTECTION SCHEME

Assume that Phase Instantaneous Overcurrent 1 is used by Devices 2, 3, and 4 to block Device 1. If not blocked, Device 1 would trip the bus upon detecting a fault and applying a short coordination time delay.

The following settings should be applied (assume Bit 3 is used by all 3 devices to send the blocking signal and Direct Inputs 7, 8, and 9 are used by the receiving device to monitor the three blocking signals):

UR IED 2: **DIRECT OUT 3 OPERAND**: "PHASE IOC1 OP"

UR IED 3: **DIRECT OUT 3 OPERAND**: "PHASE IOC1 OP"

UR IED 4: **DIRECT OUT 3 OPERAND**: "PHASE IOC1 OP"

UR IED 1: **DIRECT INPUT 7 DEVICE ID**: "2"
DIRECT INPUT 7 BIT NUMBER: "3"
DIRECT INPUT 7 DEFAULT STATE: select "On" for security, select "Off" for dependability

DIRECT INPUT 8 DEVICE ID: "3"
DIRECT INPUT 8 BIT NUMBER: "3"

DIRECT INPUT 8 DEFAULT STATE: select "On" for security, select "Off" for dependability

DIRECT INPUT 9 DEVICE ID: "4"
DIRECT INPUT 9 BIT NUMBER: "3"
DIRECT INPUT 9 DEFAULT STATE: select "On" for security, select "Off" for dependability

Now the three blocking signals are available in UR IED 1 as DIRECT INPUT 7 ON, DIRECT INPUT 8 ON, and DIRECT INPUT 9 ON. Upon losing communications or a device, the scheme is inclined to block (if any default state is set to “On”), or to trip the bus on any overcurrent condition (all default states set to “Off”).

Example 2: Pilot-aided schemes

Consider a three-terminal line protection application shown in the figure below.

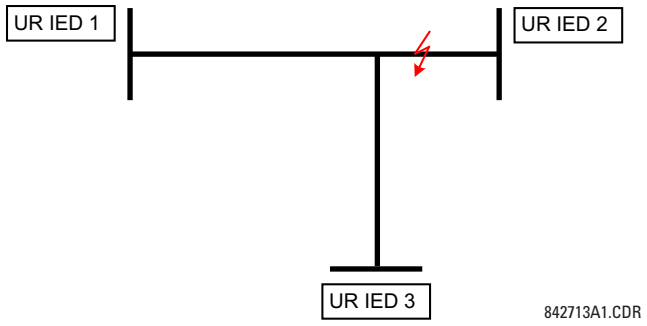

Figure 5–120: THREE-TERMINAL LINE APPLICATION

Assume the Hybrid Permissive Overreaching Transfer Trip (Hybrid POTT) scheme is applied using the architecture shown below. The scheme output operand HYB POTT TX1 is used to key the permission.

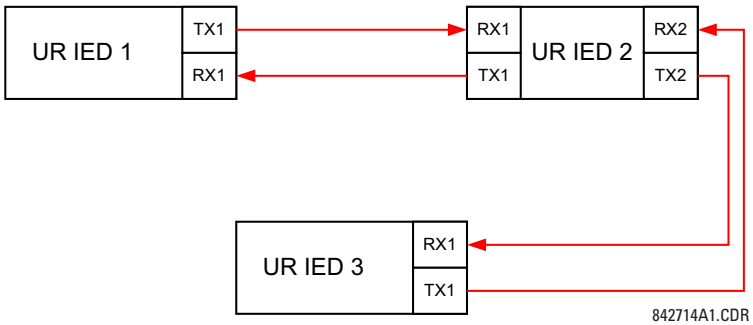

Figure 5–121: SINGLE-CHANNEL OPEN-LOOP CONFIGURATION

In the above architecture, Devices 1 and 3 do not communicate directly. Therefore, Device 2 must act as a ‘bridge’. The following settings should be applied:

UR IED 1: **DIRECT OUT 2 OPERAND:** "HYB POTT TX1"
DIRECT INPUT 5 DEVICE ID: "2"
DIRECT INPUT 5 BIT NUMBER: "2" (this is a message from IED 2)
DIRECT INPUT 6 DEVICE ID: "2"
DIRECT INPUT 6 BIT NUMBER: "4" (effectively, this is a message from IED 3)

UR IED 3: **DIRECT OUT 2 OPERAND:** "HYB POTT TX1"
DIRECT INPUT 5 DEVICE ID: "2"
DIRECT INPUT 5 BIT NUMBER: "2" (this is a message from IED 2)
DIRECT INPUT 6 DEVICE ID: "2"
DIRECT INPUT 6 BIT NUMBER: "3" (effectively, this is a message from IED 1)

UR IED 2: **DIRECT INPUT 5 DEVICE ID:** "1"
DIRECT INPUT 5 BIT NUMBER: "2"
DIRECT INPUT 6 DEVICE ID: "3"
DIRECT INPUT 6 BIT NUMBER: "2"
DIRECT OUT 2 OPERAND: "HYB POTT TX1"
DIRECT OUT 3 OPERAND: "DIRECT INPUT 5" (forward a message from 1 to 3)
DIRECT OUT 4 OPERAND: "DIRECT INPUT 6" (forward a message from 3 to 1)

Signal flow between the three IEDs is shown in the figure below:

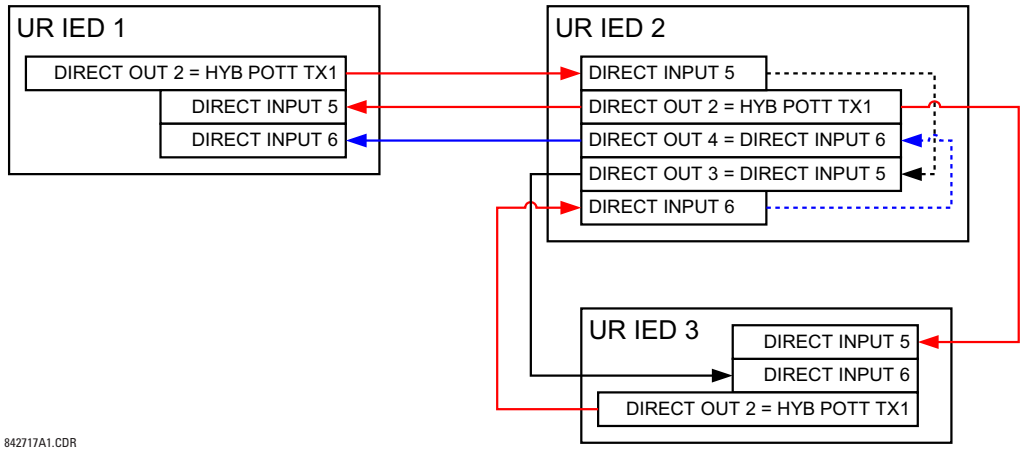

Figure 5–122: SIGNAL FLOW FOR DIRECT INPUT AND OUTPUT – EXAMPLE 3

In three-terminal applications, both the remote terminals must grant permission to trip. Therefore, at each terminal, direct inputs 5 and 6 should be ANDed in FlexLogic and the resulting operand configured as the permission to trip (**HYB POTT RX1** setting).

5.8.11 IEC 61850 GOOSE ANALOGS

PATH: SETTINGS ⇨⇩ INPUTS/OUTPUTS ⇨⇩ IEC 61850 GOOSE ANALOGS ⇨⇩ GOOSE ANALOG INPUT 1(32)

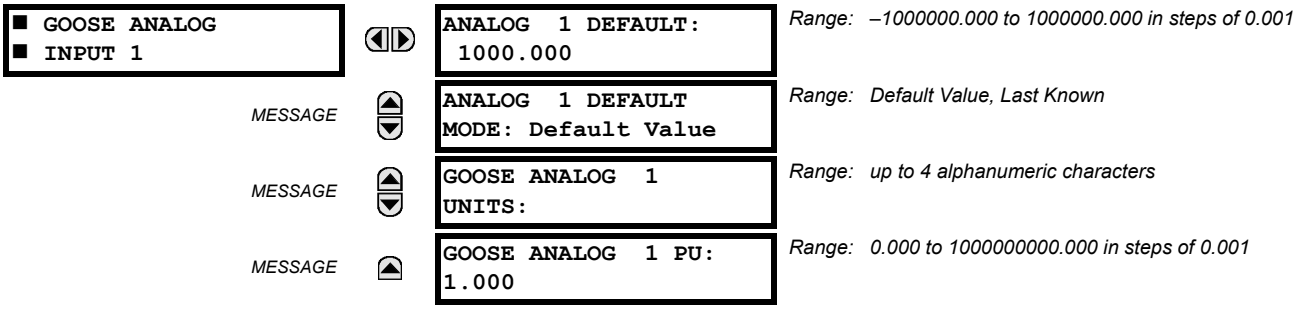

The IEC 61850 GOOSE analog inputs feature allows the transmission of analog values between any two UR-series devices. The following settings are available for each GOOSE analog input.

- **ANALOG 1 DEFAULT**: This setting specifies the value of the GOOSE analog input when the sending device is offline and the **ANALOG 1 DEFAULT MODE** is set to "Default Value".This setting is stored as an IEEE 754 / IEC 60559 floating point number. Because of the large range of this setting, not all possible values can be stored. Some values may be rounded to the closest possible floating point number.
- **ANALOG 1 DEFAULT MODE**: When the sending device is offline and this setting is "Last Known", the value of the GOOSE analog input remains at the last received value. When the sending device is offline and this setting value is "Default Value", then the value of the GOOSE analog input is defined by the **ANALOG 1 DEFAULT** setting.
- **GOOSE ANALOG 1 UNITS**: This setting specifies a four-character alphanumeric string that can is used in the actual values display of the corresponding GOOSE analog input value.

GOOSE Analogs are floating-point values, with no units. The GOOSE UNIT and PU base settings allow the user to configure GOOSE Analog, so that it can be used in a FlexElement.

GOOSE Analogs that represent current, voltage, power, frequency, angles, or power factor can be used in a FlexElement. The following text must be used in the UNITS setting, to represent these types of analogs: A, V, W, var, VA, Hz, deg, and no text (blank setting) for power factor.

GOOSE Analogs can be compared to other GOOSE Analogs with any character string or no string.

- **GOOSE ANALOG 1PU**: This setting specifies the per-unit base factor when using the GOOSE analog input FlexAnalog values in other C70 features, such as FlexElements. The base factor is applied to the GOOSE analog input FlexAnalog quantity to normalize it to a per-unit quantity. The base units are described in the following table.

  The per-unit base setting represents thousands, not single units. For example, a PU base of 1.000 is actually 1000 and a PU base of 0.001 is 1.

  When using GOOSE Analogs and PU base in FlexElements, the largest value that can be displayed in the FlexElement actual values is 2,140,000.000.

Table 5–34: GOOSE ANALOG INPUT BASE UNITS

ELEMENT	BASE UNITS
dcmA	BASE = maximum value of the **DCMA INPUT MAX** setting for the two transducers configured under the +IN and –IN inputs.
FREQUENCY	f_{BASE} = 1 Hz
PHASE ANGLE	φ_{BASE} = 360 degrees (see the UR angle referencing convention)
POWER FACTOR	PF_{BASE} = 1.00
RTDs	BASE = 100°C
SOURCE CURRENT	I_{BASE} = maximum nominal primary RMS value of the +IN and –IN inputs
SOURCE POWER	P_{BASE} = maximum value of $V_{BASE} \times I_{BASE}$ for the +IN and –IN inputs
SOURCE THD & HARMONICS	BASE = 1%
SOURCE VOLTAGE	V_{BASE} = maximum nominal primary RMS value of the +IN and –IN inputs

The GOOSE analog input FlexAnalog values are available for use in other C70 functions that use FlexAnalog values.

5.8.12 IEC 61850 GOOSE INTEGERS

PATH: SETTINGS ⇨⇩ INPUTS/OUTPUTS ⇨⇩ IEC 61850 GOOSE UINTEGERS ⇨⇩ GOOSE UINTEGER INPUT 1(16)

```
■ GOOSE UINTEGER
■ INPUT 1
```

MESSAGE

```
UINTEGER  1 DEFAULT:
     1000
```

Range: 0 to 429496295 in steps of 1

```
UINTEGER  1 DEFAULT
MODE: Default Value
```

Range: Default Value, Last Known

The IEC 61850 GOOSE uinteger inputs feature allows the transmission of FlexInteger values between any two UR-series devices. The following settings are available for each GOOSE uinteger input.

- **UINTEGER 1 DEFAULT**: This setting specifies the value of the GOOSE uinteger input when the sending device is offline and the **UINTEGER 1 DEFAULT MODE** is set to “Default Value”.This setting is stored as a 32-bit unsigned integer number.
- **UINTEGER 1 DEFAULT MODE**: When the sending device is offline and this setting is “Last Known”, the value of the GOOSE uinteger input remains at the last received value. When the sending device is offline and this setting value is “Default Value”, then the value of the GOOSE uinteger input is defined by the **UINTEGER 1 DEFAULT** setting.

The GOOSE integer input FlexInteger values are available for use in other C70 functions that use FlexInteger values.

5.9.1 DCMA INPUTS

PATH: SETTINGS ⇨⇩ TRANSDUCER I/O ⇨⇩ DCMA INPUTS ⇨ DCMA INPUT F1(U8)

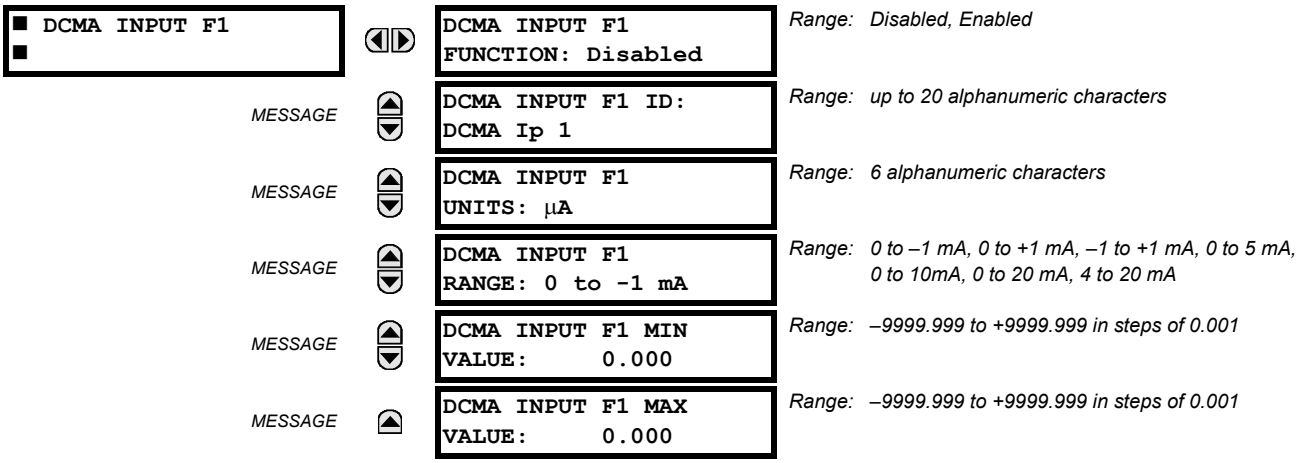

Hardware and software is provided to receive signals from external transducers and convert these signals into a digital format for use as required. The relay will accept inputs in the range of –1 to +20 mA DC, suitable for use with most common transducer output ranges; all inputs are assumed to be linear over the complete range. Specific hardware details are contained in chapter 3.

Before the DCmA input signal can be used, the value of the signal measured by the relay must be converted to the range and quantity of the external transducer primary input parameter, such as DC voltage or temperature. The relay simplifies this process by internally scaling the output from the external transducer and displaying the actual primary parameter.

DCmA input channels are arranged in a manner similar to CT and VT channels. The user configures individual channels with the settings shown here.

The channels are arranged in sub-modules of two channels, numbered from 1 through 8 from top to bottom. On power-up, the relay will automatically generate configuration settings for every channel, based on the order code, in the same general manner that is used for CTs and VTs. Each channel is assigned a slot letter followed by the row number, 1 through 8 inclusive, which is used as the channel number. The relay generates an actual value for each available input channel.

Settings are automatically generated for every channel available in the specific relay as shown above for the first channel of a type 5F transducer module installed in slot F.

The function of the channel may be either “Enabled” or “Disabled”. If “Disabled”, no actual values are created for the channel. An alphanumeric “ID” is assigned to each channel; this ID will be included in the channel actual value, along with the programmed units associated with the parameter measured by the transducer, such as volts, °C, megawatts, etc. This ID is also used to reference the channel as the input parameter to features designed to measure this type of parameter. The **DCMA INPUT F1 RANGE** setting specifies the mA DC range of the transducer connected to the input channel.

The **DCMA INPUT F1 MIN VALUE** and **DCMA INPUT F1 MAX VALUE** settings are used to program the span of the transducer in primary units. For example, a temperature transducer might have a span from 0 to 250°C; in this case the **DCMA INPUT F1 MIN VALUE** value is “0” and the **DCMA INPUT F1 MAX VALUE** value is “250”. Another example would be a watts transducer with a span from –20 to +180 MW; in this case the **DCMA INPUT F1 MIN VALUE** value would be “–20” and the **DCMA INPUT F1 MAX VALUE** value “180”. Intermediate values between the min and max values are scaled linearly.

5.9.2 RTD INPUTS

PATH: SETTINGS ⇨⇩ TRANSDUCER I/O ⇨⇩ RTD INPUTS ⇨ RTD INPUT F1(U8)

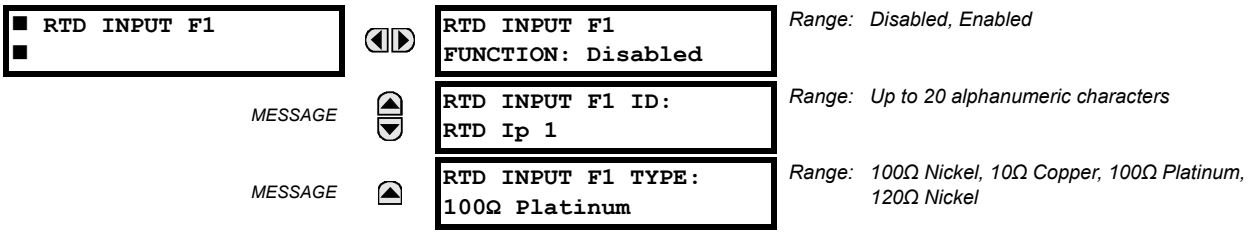

Hardware and software is provided to receive signals from external resistance temperature detectors and convert these signals into a digital format for use as required. These channels are intended to be connected to any of the RTD types in common use. Specific hardware details are contained in chapter 3.

RTD input channels are arranged in a manner similar to CT and VT channels. The user configures individual channels with the settings shown here.

The channels are arranged in sub-modules of two channels, numbered from 1 through 8 from top to bottom. On power-up, the relay will automatically generate configuration settings for every channel, based on the order code, in the same general manner that is used for CTs and VTs. Each channel is assigned a slot letter followed by the row number, 1 through 8 inclusive, which is used as the channel number. The relay generates an actual value for each available input channel.

Settings are automatically generated for every channel available in the specific relay as shown above for the first channel of a type 5C transducer module installed in the first available slot.

The function of the channel may be either “Enabled” or “Disabled”. If “Disabled”, there will not be an actual value created for the channel. An alphanumeric ID is assigned to the channel; this ID will be included in the channel actual values. It is also used to reference the channel as the input parameter to features designed to measure this type of parameter. Selecting the type of RTD connected to the channel configures the channel.

Actions based on RTD overtemperature, such as trips or alarms, are done in conjunction with the FlexElements feature. In FlexElements, the operate level is scaled to a base of 100°C. For example, a trip level of 150°C is achieved by setting the operate level at 1.5 pu. FlexElement operands are available to FlexLogic for further interlocking or to operate an output contact directly.

Refer to the following table for reference temperature values for each RTD type.

Table 5–35: RTD TEMPERATURE VS. RESISTANCE

TEMPERATURE		RESISTANCE (IN OHMS)			
°C	°F	100 Ω PT (DIN 43760)	120 Ω NI	100 Ω NI	10 Ω CU
–50	–58	80.31	86.17	71.81	7.10
–40	–40	84.27	92.76	77.30	7.49
–30	–22	88.22	99.41	82.84	7.88
–20	–4	92.16	106.15	88.45	8.26
–10	14	96.09	113.00	94.17	8.65
0	32	100.00	120.00	100.00	9.04
10	50	103.90	127.17	105.97	9.42
20	68	107.79	134.52	112.10	9.81
30	86	111.67	142.06	118.38	10.19
40	104	115.54	149.79	124.82	10.58
50	122	119.39	157.74	131.45	10.97
60	140	123.24	165.90	138.25	11.35
70	158	127.07	174.25	145.20	11.74
80	176	130.89	182.84	152.37	12.12
90	194	134.70	191.64	159.70	12.51
100	212	138.50	200.64	167.20	12.90
110	230	142.29	209.85	174.87	13.28
120	248	146.06	219.29	182.75	13.67
130	266	149.82	228.96	190.80	14.06
140	284	153.58	238.85	199.04	14.44
150	302	157.32	248.95	207.45	14.83
160	320	161.04	259.30	216.08	15.22
170	338	164.76	269.91	224.92	15.61
180	356	168.47	280.77	233.97	16.00
190	374	172.46	291.96	243.30	16.39
200	392	175.84	303.46	252.88	16.78
210	410	179.51	315.31	262.76	17.17
220	428	183.17	327.54	272.94	17.56
230	446	186.82	340.14	283.45	17.95
240	464	190.45	353.14	294.28	18.34
250	482	194.08	366.53	305.44	18.73

PATH: SETTINGS ⇨⇩ TRANSDUCER I/O ⇨⇩ DCMA OUTPUTS ⇨ DCMA OUTPUT F1(U8)

```
■ DCMA OUTPUT F1
■
```

```
DCMA OUTPUT F1
SOURCE: Off
```

Range: Off, any analog actual value parameter

MESSAGE

```
DCMA OUTPUT F1
RANGE: -1 to 1 mA
```

Range: –1 to 1 mA, 0 to 1 mA, 4 to 20 mA

MESSAGE

```
DCMA OUTPUT F1
MIN VAL: 0.000 pu
```

Range: –90.000 to 90.000 pu in steps of 0.001

MESSAGE

```
DCMA OUTPUT F1
MAX VAL: 1.000 pu
```

Range: –90.000 to 90.000 pu in steps of 0.001

Hardware and software is provided to generate DCmA signals that allow interfacing with external equipment. Specific hardware details are contained in chapter 3. The DCmA output channels are arranged in a manner similar to transducer input or CT and VT channels. The user configures individual channels with the settings shown below.

The channels are arranged in sub-modules of two channels, numbered 1 through 8 from top to bottom. On power-up, the relay automatically generates configuration settings for every channel, based on the order code, in the same manner used for CTs and VTs. Each channel is assigned a slot letter followed by the row number, 1 through 8 inclusive, which is used as the channel number.

Both the output range and a signal driving a given output are user-programmable via the following settings menu (an example for channel M5 is shown).

The relay checks the driving signal (x in equations below) for the minimum and maximum limits, and subsequently re-scales so the limits defined as **MIN VAL** and **MAX VAL** match the output range of the hardware defined as **RANGE**. The following equation is applied:

$$I_{out} = \begin{cases} I_{min} & \text{if } x < \textbf{MIN VAL} \\ I_{max} & \text{if } x > \textbf{MAX VAL} \\ k(x - \textbf{MIN VAL}) + I_{min} & \text{otherwise} \end{cases} \quad \textbf{(EQ 5.27)}$$

where: x is a driving signal specified by the **SOURCE** setting
I_{min} and I_{max} are defined by the **RANGE** setting
k is a scaling constant calculated as:

$$k = \frac{I_{max} - I_{min}}{\textbf{MAX VAL} - \textbf{MIN VAL}} \quad \textbf{(EQ 5.28)}$$

The feature is intentionally inhibited if the **MAX VAL** and **MIN VAL** settings are entered incorrectly, e.g. when **MAX VAL** – **MIN VAL** < 0.1 pu. The resulting characteristic is illustrated in the following figure.

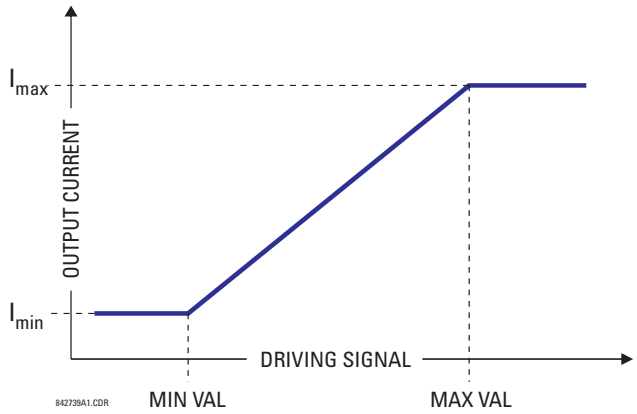

Figure 5–123: DCMA OUTPUT CHARACTERISTIC

The DCmA output settings are described below.

- **DCMA OUTPUT F1 SOURCE**: This setting specifies an internal analog value to drive the analog output. Actual values (FlexAnalog parameters) such as power, current amplitude, voltage amplitude, power factor, etc. can be configured as sources driving DCmA outputs. Refer to Appendix A for a complete list of FlexAnalog parameters.
- **DCMA OUTPUT F1 RANGE**: This setting allows selection of the output range. Each DCmA channel may be set independently to work with different ranges. The three most commonly used output ranges are available.
- **DCMA OUTPUT F1 MIN VAL**: This setting allows setting the minimum limit for the signal that drives the output. This setting is used to control the mapping between an internal analog value and the output current. The setting is entered in per-unit values. The base units are defined in the same manner as the FlexElement base units.
- **DCMA OUTPUT F1 MAX VAL**: This setting allows setting the maximum limit for the signal that drives the output. This setting is used to control the mapping between an internal analog value and the output current. The setting is entered in per-unit values. The base units are defined in the same manner as the FlexElement base units.

NOTE

The **DCMA OUTPUT F1 MIN VAL** and **DCMA OUTPUT F1 MAX VAL** settings are ignored for power factor base units (i.e. if the **DCMA OUTPUT F1 SOURCE** is set to FlexAnalog value based on power factor measurement).

Three application examples are described below.

Example: power monitoring

A three phase active power on a 13.8 kV system measured via UR-series relay source 1 is to be monitored by the DCmA H1 output of the range of –1 to 1 mA. The following settings are applied on the relay: CT ratio = 1200:5, VT secondary 115, VT connection is delta, and VT ratio = 120. The nominal current is 800 A primary and the nominal power factor is 0.90. The power is to be monitored in both importing and exporting directions and allow for 20% overload compared to the nominal.

5

The nominal three-phase power is:

$$P = \sqrt{3} \times 13.8\ \text{kV} \times 0.8\ \text{kA} \times 0.9 = 17.21\ \text{MW} \quad \textbf{(EQ 5.29)}$$

The three-phase power with 20% overload margin is:

$$P_{max} = 1.2 \times 17.21\ \text{MW} = 20.65\ \text{MW} \quad \textbf{(EQ 5.30)}$$

The base unit for power (refer to the FlexElements section in this chapter for additional details) is:

$$P_{BASE} = 115\ \text{V} \times 120 \times 1.2\ \text{kA} = 16.56\ \text{MW} \quad \textbf{(EQ 5.31)}$$

The minimum and maximum power values to be monitored (in pu) are:

$$\text{minimum power} = \frac{-20.65\ \text{MW}}{16.56\ \text{MW}} = -1.247\ \text{pu}, \quad \text{maximum power} = \frac{20.65\ \text{MW}}{16.56\ \text{MW}} = 1.247\ \text{pu} \quad \textbf{(EQ 5.32)}$$

The following settings should be entered:

DCMA OUTPUT H1 SOURCE: "SRC 1 P"
DCMA OUTPUT H1 RANGE: "–1 to 1 mA"
DCMA OUTPUT H1 MIN VAL: "–1.247 pu"
DCMA OUTPUT H1 MAX VAL: "1.247 pu"

With the above settings, the output will represent the power with the scale of 1 mA per 20.65 MW. The worst-case error for this application can be calculated by superimposing the following two sources of error:

- ±0.5% of the full scale for the analog output module, or $\pm 0.005 \times (1 - (-1)) \times 20.65\ \text{MW} = \pm 0.207\ \text{MW}$
- ±1% of reading error for the active power at power factor of 0.9

For example at the reading of 20 MW, the worst-case error is 0.01 × 20 MW + 0.207 MW = 0.407 MW.

Example: current monitoring

The phase A current (true RMS value) is to be monitored via the H2 current output working with the range from 4 to 20 mA. The CT ratio is 5000:5 and the maximum load current is 4200 A. The current should be monitored from 0 A upwards, allowing for 50% overload.

The phase current with the 50% overload margin is:

$$I_{max} = 1.5 \times 4.2 \text{ kA} = 6.3 \text{ kA} \quad \textbf{(EQ 5.33)}$$

The base unit for current (refer to the FlexElements section in this chapter for additional details) is:

$$I_{BASE} = 5 \text{ kA} \quad \textbf{(EQ 5.34)}$$

The minimum and maximum power values to be monitored (in pu) are:

$$\text{minimum current} = \frac{0 \text{ kA}}{5 \text{ kA}} = 0 \text{ pu}, \quad \text{maximum current} = \frac{6.3 \text{ kA}}{5 \text{ kA}} = 1.26 \text{ pu} \quad \textbf{(EQ 5.35)}$$

The following settings should be entered:

DCMA OUTPUT H2 SOURCE: "SRC 1 Ia RMS"
DCMA OUTPUT H2 RANGE: "4 to 20 mA"
DCMA OUTPUT H2 MIN VAL: "0.000 pu"
DCMA OUTPUT H2 MAX VAL: "1.260 pu"

The worst-case error for this application could be calculated by superimposing the following two sources of error:

- ±0.5% of the full scale for the analog output module, or $\pm 0.005 \times (20 - 4) \times 6.3 \text{ kA} = \pm 0.504 \text{ kA}$
- ±0.25% of reading or ±0.1% of rated (whichever is greater) for currents between 0.1 and 2.0 of nominal

For example, at the reading of 4.2 kA, the worst-case error is max(0.0025 × 4.2 kA, 0.001 × 5 kA) + 0.504 kA = 0.515 kA.

Example: voltage monitoring

A positive-sequence voltage on a 400 kV system measured via source 2 is to be monitored by the DCmA H3 output with a range of 0 to 1 mA. The VT secondary setting is 66.4 V, the VT ratio setting is 6024, and the VT connection setting is "Delta". The voltage should be monitored in the range from 70% to 110% of nominal.

The minimum and maximum positive-sequence voltages to be monitored are:

$$V_{min} = 0.7 \times \frac{400 \text{ kV}}{\sqrt{3}} = 161.66 \text{ kV}, \quad V_{max} = 1.1 \times \frac{400 \text{ kV}}{\sqrt{3}} = 254.03 \text{ kV} \quad \textbf{(EQ 5.36)}$$

The base unit for voltage (refer to the FlexElements section in this chapter for additional details) is:

$$V_{BASE} = 0.0664 \text{ kV} \times 6024 = 400 \text{ kV} \quad \textbf{(EQ 5.37)}$$

The minimum and maximum voltage values to be monitored (in pu) are:

$$\text{minimum voltage} = \frac{161.66 \text{ kV}}{400 \text{ kV}} = 0.404 \text{ pu}, \quad \text{maximum voltage} = \frac{254.03 \text{ kV}}{400 \text{ kV}} = 0.635 \text{ pu} \quad \textbf{(EQ 5.38)}$$

The following settings should be entered:

DCMA OUTPUT H3 SOURCE: "SRC 2 V_1 mag"
DCMA OUTPUT H3 RANGE: "0 to 1 mA"
DCMA OUTPUT H3 MIN VAL: "0.404 pu"
DCMA OUTPUT H3 MAX VAL: "0.635 pu"

The limit settings differ from the expected 0.7 pu and 1.1 pu because the relay calculates the positive-sequence quantities scaled to the phase-to-ground voltages, even if the VTs are connected in "Delta" (see the Metering Conventions section in chapter 6), while at the same time the VT nominal voltage is 1 pu for the settings. Consequently the settings required in this example differ from naturally expected by the factor of $\sqrt{3}$.

The worst-case error for this application could be calculated by superimposing the following two sources of error:

- ±0.5% of the full scale for the analog output module, or $\pm 0.005 \times (1 - 0) \times 254.03 \text{ kV} = \pm 1.27 \text{ kV}$
- ±0.5% of reading

For example, under nominal conditions, the positive-sequence reads 230.94 kV and the worst-case error is 0.005 x 230.94 kV + 1.27 kV = 2.42 kV.

PATH: SETTINGS ⇨⇩ TESTING

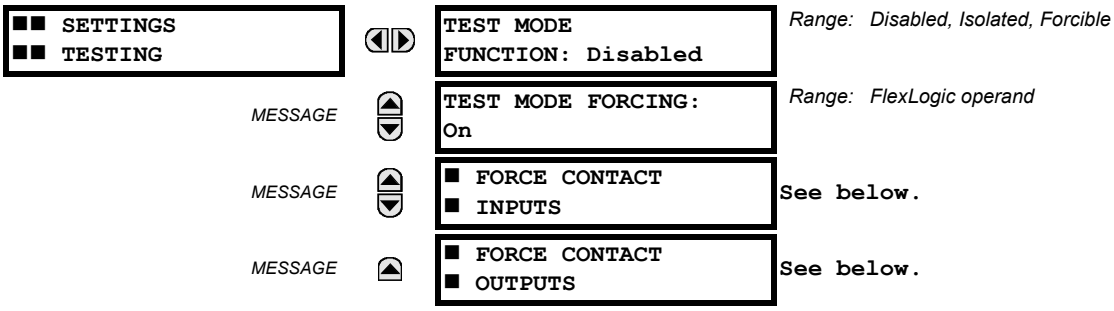

The C70 provides a test facility to verify the functionality of contact inputs and outputs, some communication functions and the phasor measurement unit (where applicable), using simulated conditions. The test mode is indicated on the relay faceplate by a Test Mode LED indicator.

The test mode may be in any of three states: disabled, isolated, or forcible.

In the “Disabled” mode, C70 operation is normal and all test features are disabled.

In the “Isolated” mode, the C70 is prevented from performing certain control actions, including tripping via contact outputs. All relay contact outputs, including latching outputs, are disabled. Channel tests and phasor measurement unit tests remain usable on applicable UR-series models.

5

In the “Forcible” mode, the operand selected by the **TEST MODE FORCING** setting controls the relay inputs and outputs. If the test mode is forcible, and the operand assigned to the **TEST MODE FORCING** setting is “Off”, the C70 inputs and outputs operate normally. If the test mode is forcible, and the operand assigned to the **TEST MODE FORCING** setting is “On”, the C70 contact inputs and outputs are forced to the values specified in the following sections. Forcing may be controlled by manually changing the operand selected by the **TEST MODE FORCING** setting between on and off, or by selecting a user-programmable pushbutton, contact input, or communication-based input operand. Channel tests and phasor measurement unit tests remain usable on applicable UR-series models.

NOTE

Communications based inputs and outputs remain fully operational in test mode. If a control action is programmed using direct inputs and outputs or remote inputs and outputs, then the test procedure must take this into account.

When in “Forcible” mode, the operand selected by the **TEST MODE FORCING** setting dictates further response of the C70 to testing conditions. To force contact inputs and outputs through relay settings, set **TEST MODE FORCING** to “On”. To force contact inputs and outputs through a user-programmable condition, such as FlexLogic operand (pushbutton, contact input, communication-based input, or a combination of these), set **TEST MODE FORCING** to the desired operand. The contact input or output is forced when the selected operand assumes a logic 1 state.

The C70 remains fully operational in test mode, allowing for various testing procedures. In particular, the protection and control elements, FlexLogic, and communication-based inputs and outputs function normally.

The only difference between the normal operation and the test mode is the behavior of the input and output contacts. The contact inputs can be forced to report as open or closed or remain fully operational, whereas the contact outputs can be forced to open, close, freeze, or remain fully operational. The response of the contact input and output contacts to the test mode is programmed individually for each input and output using the force contact inputs and force contact outputs test functions described in the following sections.

The test mode state is indicated on the relay faceplate by a combination of the Test Mode LED indicator, the In-Service LED indicator, and by the critical fail relay, as shown in the following table.

Table 5–36: TEST MODE OPERATION

TEST MODE FUNCTION	TEST MODE FORCING OPERAND	IN-SERVICE LED	TEST MODE LED	CRITICAL FAIL RELAY	INPUT AND OUTPUT BEHAVIOR
Disabled	No effect	Unaffected	Off	Unaffected	Contact outputs and inputs are under normal operation. Channel tests and PMU tests not operational (where applicable).
Isolated	No effect	Off	On	De-energized	Contact outputs are disabled and contact inputs are operational. Channel tests and PMU tests are also operational (where applicable).
Forcible	On (logic 1)	Off	Flashing	De-energized	Contact inputs and outputs are controlled by the force contact input and force contact output functions. Channel tests and PMU tests are operational (where applicable).
	Off (logic 0)	Off	Flashing	De-energized	Contact outputs and inputs are under normal operation. Channel tests and PMU tests are also operational (where applicable).

The **TEST MODE FUNCTION** setting can only be changed by a direct user command. Following a restart, power up, settings upload, or firmware upgrade, the test mode will remain at the last programmed value. This allows a C70 that has been placed in isolated mode to remain isolated during testing and maintenance activities. On restart, the **TEST MODE FORCING** setting and the force contact input and force contact output settings all revert to their default states.

5.10.2 FORCE CONTACT INPUTS

PATH: SETTINGS ⇨⇩ TESTING ⇨⇩ FORCE CONTACT INPUTS

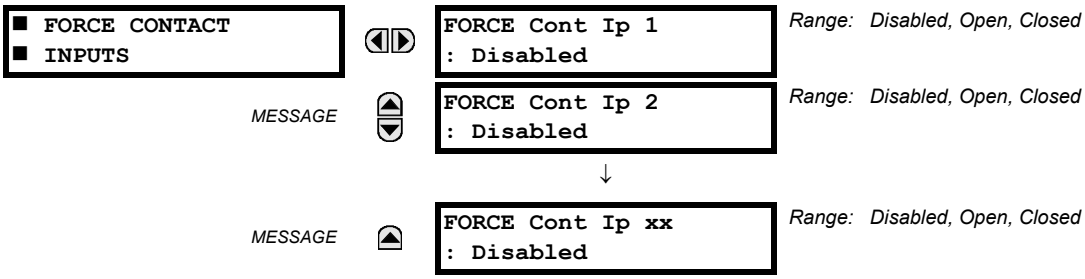

The relay contact inputs can be pre-programmed to respond to the test mode in the following ways:

- If set to “Disabled”, the input remains fully operational. It is controlled by the voltage across its input terminals and can be turned on and off by external circuitry. This value should be selected if a given input must be operational during the test. This includes, for example, an input initiating the test, or being a part of a user pre-programmed test sequence.
- If set to “Open”, the input is forced to report as opened (Logic 0) for the entire duration of the test mode regardless of the voltage across the input terminals.
- If set to “Closed”, the input is forced to report as closed (Logic 1) for the entire duration of the test mode regardless of the voltage across the input terminals.

The force contact inputs feature provides a method of performing checks on the function of all contact inputs. Once enabled, the relay is placed into test mode, allowing this feature to override the normal function of contact inputs. The Test Mode LED will be on, indicating that the relay is in test mode. The state of each contact input may be programmed as “Disabled”, “Open”, or “Closed”. All contact input operations return to normal when all settings for this feature are disabled.

5.10.3 FORCE CONTACT OUTPUTS

PATH: SETTINGS ⇨⇩ TESTING ⇨⇩ FORCE CONTACT OUTPUTS

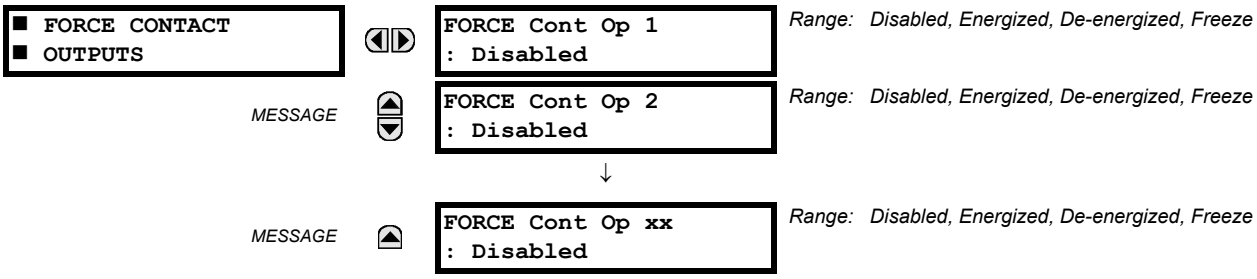

The relay contact outputs can be pre-programmed to respond to the test mode.

If set to "Disabled", the contact output remains fully operational. If operates when its control operand is logic 1 and will resets when its control operand is logic 0. If set to "Energized", the output will close and remain closed for the entire duration of the test mode, regardless of the status of the operand configured to control the output contact. If set to "De-energized", the output will open and remain opened for the entire duration of the test mode regardless of the status of the operand configured to control the output contact. If set to "Freeze", the output retains its position from before entering the test mode, regardless of the status of the operand configured to control the output contact.

These settings are applied two ways. First, external circuits may be tested by energizing or de-energizing contacts. Second, by controlling the output contact state, relay logic may be tested and undesirable effects on external circuits avoided.

5

Example 1: Initiating test mode through user-programmable pushbutton 1

For example, the test mode can be initiated from user-programmable pushbutton 1. The pushbutton will be programmed as "Latched" (pushbutton pressed to initiate the test, and pressed again to terminate the test). During the test, contact input 1 should remain operational, contact inputs 2 and 3 should open, and contact input 4 should close. Also, contact output 1 should freeze, contact output 2 should open, contact output 3 should close, and contact output 4 should remain fully operational. The required settings are shown below.

To enable user-programmable pushbutton 1 to initiate the test mode, make the following changes in the SETTINGS ⇨⇩ TESTING ⇨ TEST MODE menu: **TEST MODE FUNCTION:** enabled and **TEST MODE INITIATE:** "PUSHBUTTON 1 ON"

Make the following changes to configure the contact inputs and outputs. In the SETTINGS ⇨⇩ TESTING ⇨⇩ FORCE CONTACT INPUTS and FORCE CONTACT OUTPUTS menus, set:

FORCE Cont Ip 1: "Disabled", **FORCE Cont Ip 2:** "Open", **FORCE Cont Ip 3:** "Open", and **FORCE Cont Ip 4:** "Closed"
FORCE Cont Op 1: "Freeze", **FORCE Cont Op 2:** "De-energized", **FORCE Cont Op 3:** "Energized", and **FORCE Cont Op 4:** "Disabled"

Example 2: Initiating a test from user-programmable pushbutton 1 or through remote input 1

In this example, the test can be initiated locally from user-programmable pushbutton 1 or remotely through remote input 1. Both the pushbutton and the remote input will be programmed as "Latched". Write the following FlexLogic equation:

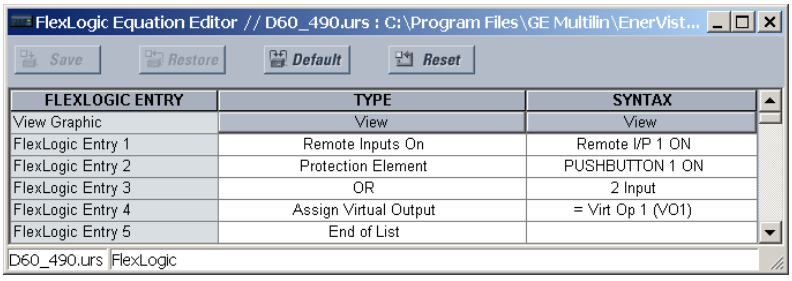

Set the user-programmable pushbutton as latching by changing SETTINGS ⇨ PRODUCT SETUP ⇨⇩ USER-PROGRAMMABLE PUSHBUTTONS ⇨ USER PUSHBUTTON 1 ⇨ PUSHBUTTON 1 FUNCTION to "Latched". To enable either pushbutton 1 or remote input 1 to initiate the Test mode, make the following changes in the SETTINGS ⇨⇩ TESTING ⇨ TEST MODE menu:

TEST MODE FUNCTION: enabled and **TEST MODE INITIATE:** "VO1"

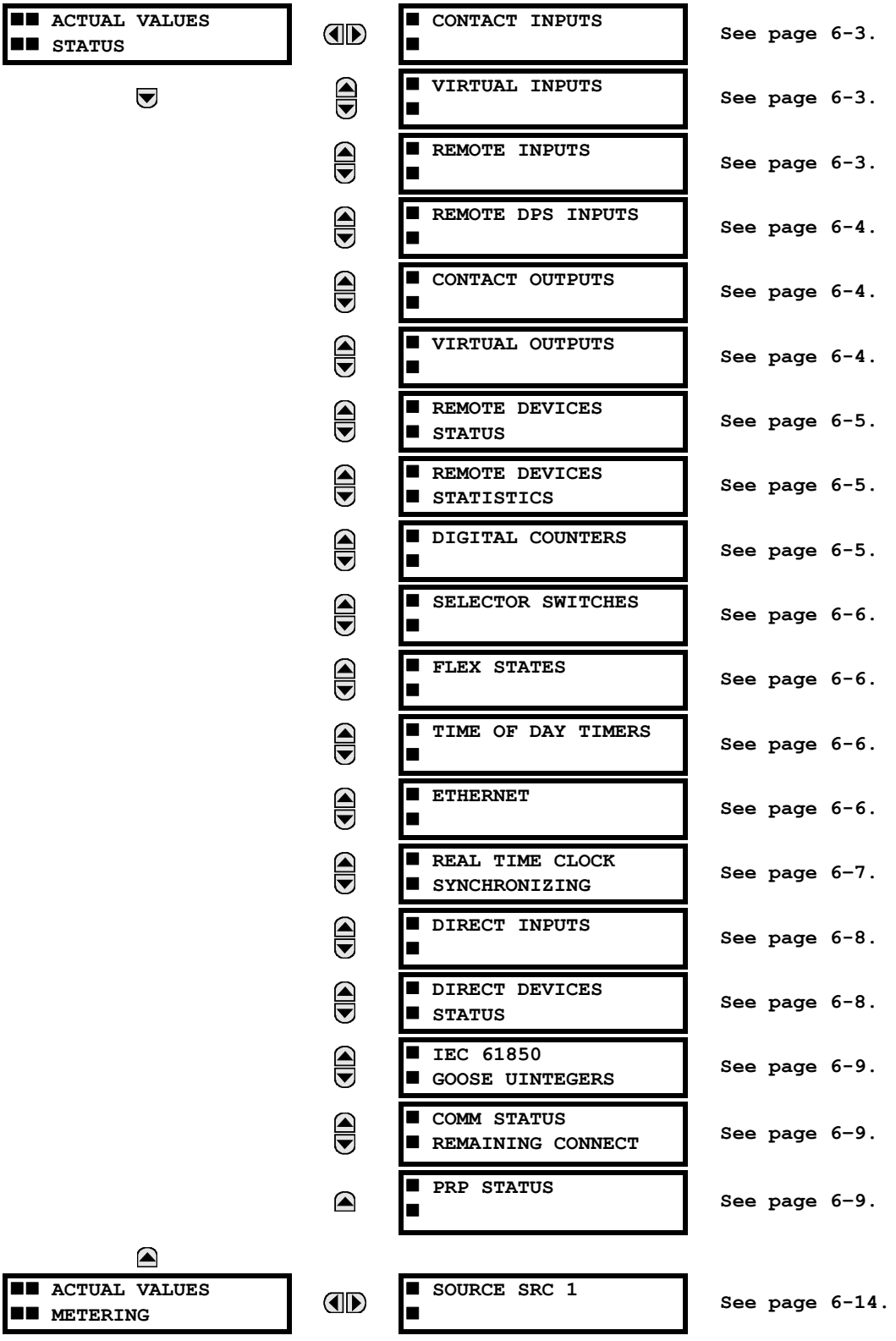
ACTUAL VALUES
STATUS
CONTACT INPUTS
See page 6-3.
VIRTUAL INPUTS
See page 6-3.
REMOTE INPUTS
See page 6-3.
REMOTE DPS INPUTS
See page 6-4.
CONTACT OUTPUTS
See page 6-4.
VIRTUAL OUTPUTS
See page 6-4.
REMOTE DEVICES STATUS
See page 6-5.
REMOTE DEVICES STATISTICS
See page 6-5.
DIGITAL COUNTERS
See page 6-5.
SELECTOR SWITCHES
See page 6-6.
FLEX STATES
See page 6-6.
TIME OF DAY TIMERS
See page 6-6.
ETHERNET
See page 6-6.
REAL TIME CLOCK SYNCHRONIZING
See page 6-7.
DIRECT INPUTS
See page 6-8.
DIRECT DEVICES STATUS
See page 6-8.
IEC 61850 GOOSE UINTEGERS
See page 6-9.
COMM STATUS REMAINING CONNECT
See page 6-9.
PRP STATUS
See page 6-9.
ACTUAL VALUES
METERING
SOURCE SRC 1
See page 6-14.

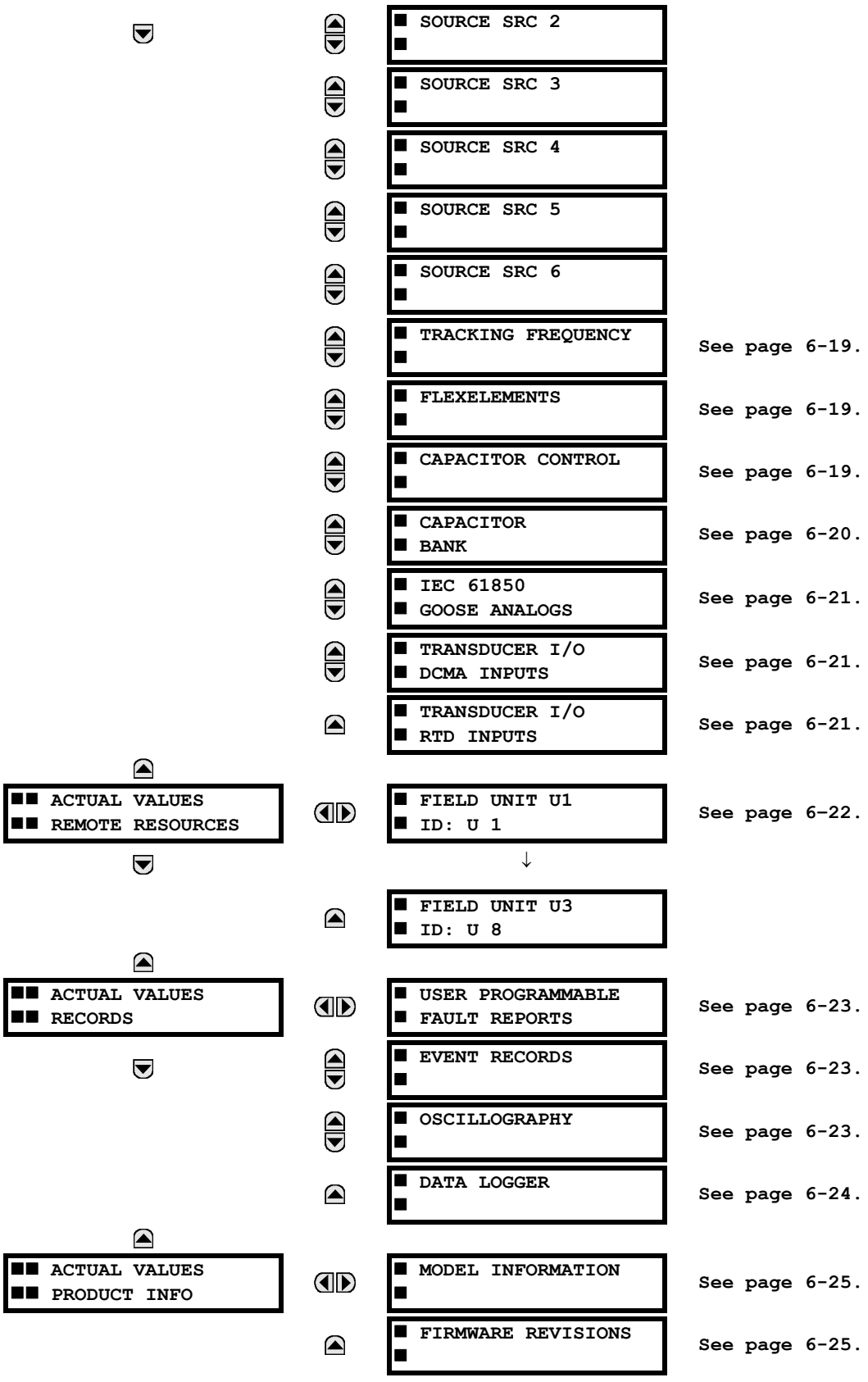
SOURCE SRC 2
SOURCE SRC 3
SOURCE SRC 4
SOURCE SRC 5
SOURCE SRC 6
TRACKING FREQUENCY
See page 6-19.
FLEXELEMENTS
See page 6-19.
CAPACITOR CONTROL
See page 6-19.
CAPACITOR BANK
See page 6-20.
IEC 61850 GOOSE ANALOGS
See page 6-21.
TRANSDUCER I/O DCMA INPUTS
See page 6-21.
TRANSDUCER I/O RTD INPUTS
See page 6-21.
ACTUAL VALUES REMOTE RESOURCES
FIELD UNIT U1 ID: U 1
See page 6-22.
FIELD UNIT U3 ID: U 8
ACTUAL VALUES RECORDS
USER PROGRAMMABLE FAULT REPORTS
See page 6-23.
EVENT RECORDS
See page 6-23.
OSCILLOGRAPHY
See page 6-23.
DATA LOGGER
See page 6-24.
ACTUAL VALUES PRODUCT INFO
MODEL INFORMATION
See page 6-25.
FIRMWARE REVISIONS
See page 6-25.

NOTE

For status reporting, 'On' represents Logic 1 and 'Off' represents Logic 0.

6.2.1 CONTACT INPUTS

PATH: ACTUAL VALUES ⇨ STATUS ⇨ CONTACT INPUTS

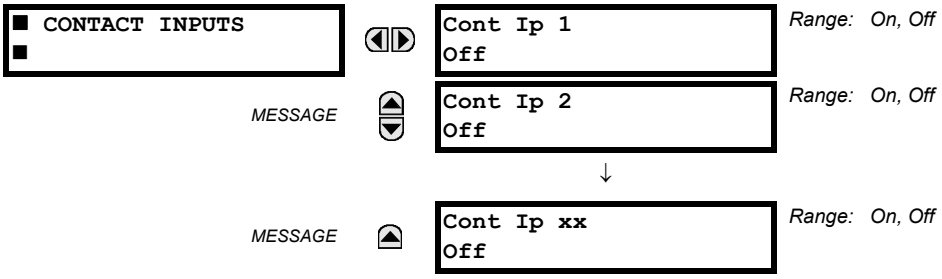

The present status of the contact inputs is shown here. The first line of a message display indicates the ID of the contact input. For example, 'Cont Ip 1' refers to the contact input in terms of the default name-array index. The second line of the display indicates the logic state of the contact input.

6.2.2 VIRTUAL INPUTS

PATH: ACTUAL VALUES ⇨ STATUS ⇨⇩ VIRTUAL INPUTS

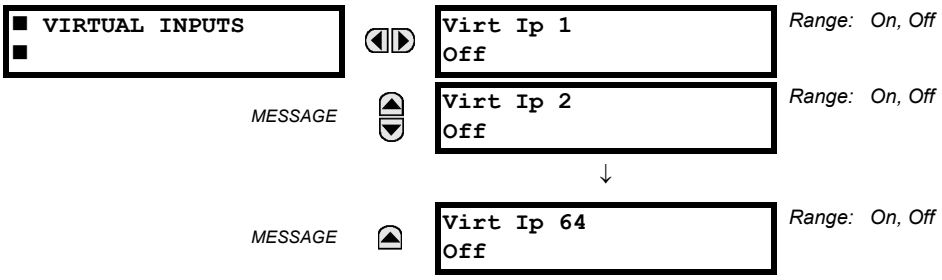

The present status of the 64 virtual inputs is shown here. The first line of a message display indicates the ID of the virtual input. For example, 'Virt Ip 1' refers to the virtual input in terms of the default name. The second line of the display indicates the logic state of the virtual input.

6.2.3 REMOTE INPUTS

PATH: ACTUAL VALUES ⇨ STATUS ⇨⇩ REMOTE INPUTS

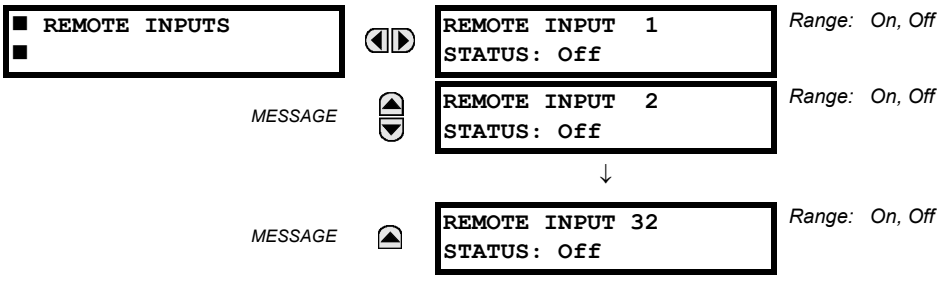

The present state of the 32 remote inputs is shown here.

The state displayed will be that of the remote point unless the remote device has been established to be "Offline" in which case the value shown is the programmed default state for the remote input.

6.2.4 REMOTE DOUBLE-POINT STATUS INPUTS

PATH: ACTUAL VALUES ⇨ STATUS ⇨⇩ REMOTE DPS INPUTS

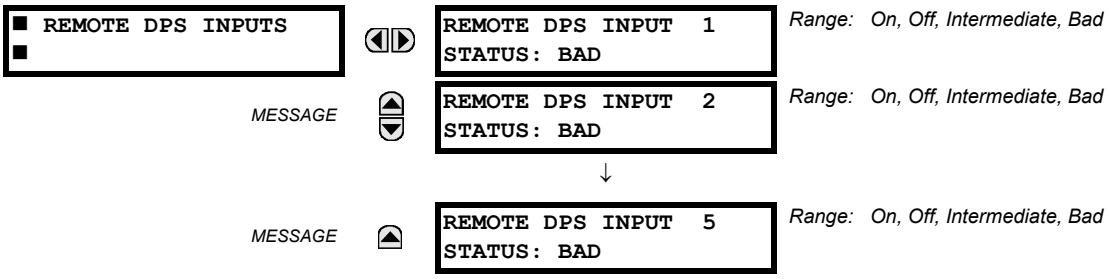

The present state of the remote double-point status inputs is shown here. The actual values indicate if the remote double-point status inputs are in the on (close), off (open), intermediate, or bad state.

6.2.5 CONTACT OUTPUTS

PATH: ACTUAL VALUES ⇨ STATUS ⇨⇩ CONTACT OUTPUTS

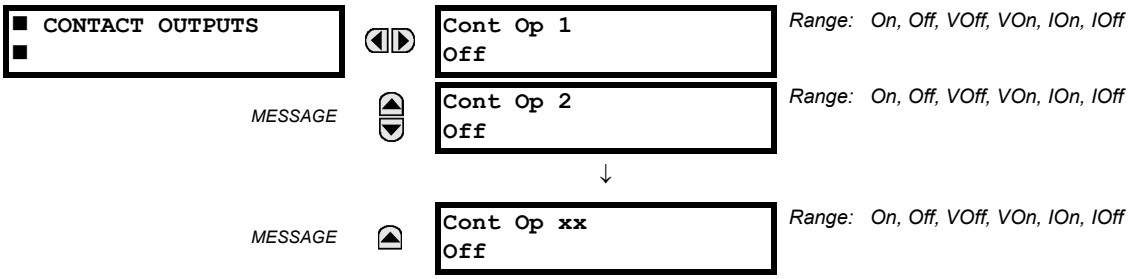

The present state of the contact outputs is shown here. The first line of a message display indicates the ID of the contact output. For example, 'Cont Op 1' refers to the contact output in terms of the default name-array index. The second line of the display indicates the logic state of the contact output.

NOTE

For form-A contact outputs, the state of the voltage and current detectors is displayed as Off, VOff, IOff, On, IOn, and VOn. For form-C contact outputs, the state is displayed as Off or On.

6.2.6 VIRTUAL OUTPUTS

PATH: ACTUAL VALUES ⇨ STATUS ⇨⇩ VIRTUAL OUTPUTS

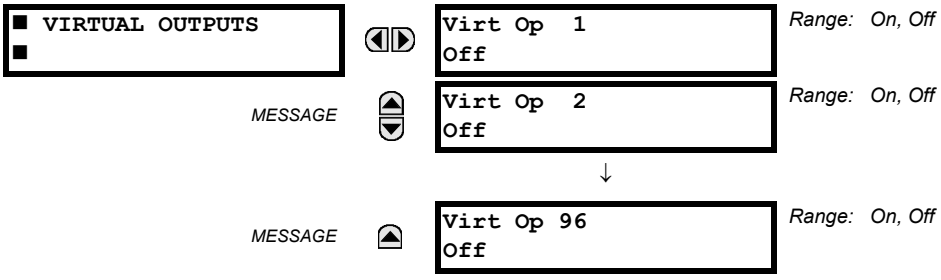

The present state of up to 96 virtual outputs is shown here. The first line of a message display indicates the ID of the virtual output. For example, 'Virt Op 1' refers to the virtual output in terms of the default name-array index. The second line of the display indicates the logic state of the virtual output, as calculated by the FlexLogic equation for that output.

6.2.7 REMOTE DEVICES

a) STATUS

PATH: ACTUAL VALUES ⇨ STATUS ⇨⇩ REMOTE DEVICES STATUS

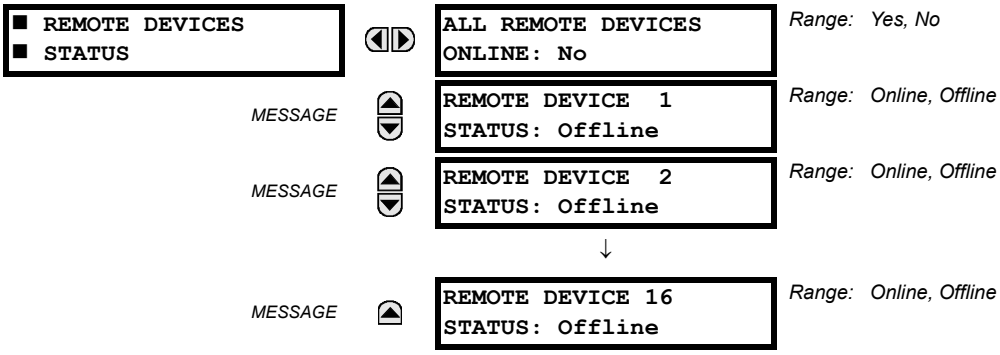

The present state of the programmed remote devices is shown here. The **ALL REMOTE DEVICES ONLINE** message indicates whether or not all programmed remote devices are online. If the corresponding state is "No", then at least one required remote device is not online.

b) STATISTICS

PATH: ACTUAL VALUES ⇨ STATUS ⇨⇩ REMOTE DEVICES STATISTICS ⇨ REMOTE DEVICE 1(16)

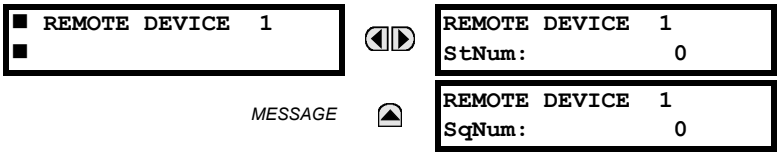

Statistical data (two types) for up to 16 programmed remote devices is shown here.

The **STNUM** number is obtained from the indicated remote device and increments whenever a change of state of at least one item occurs in the GSSE/GOOSE message. The **SQNUM** number is obtained from the indicated remote device and increments whenever a GSSE/GOOSE message, without a state change, is sent. When the GSSE/GOOSE message trasmits a state change, the **SQNUM** resets to 0. This number rolls over to zero when a count of 4,294,967,295 is incremented.

6.2.8 DIGITAL COUNTERS

PATH: ACTUAL VALUES ⇨ STATUS ⇨⇩ DIGITAL COUNTERS ⇨ DIGITAL COUNTERS Counter 1(8)

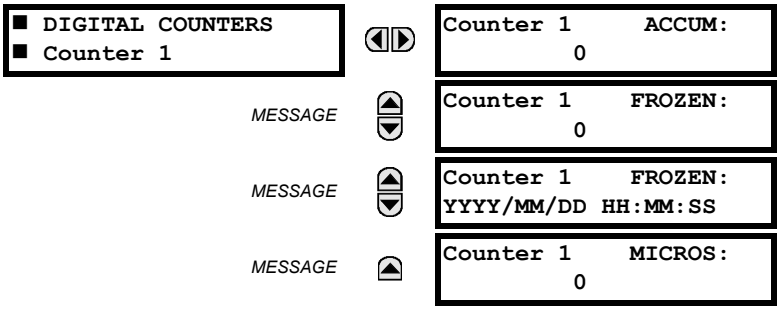

The present status of the eight digital counters is shown here. The status of each counter, with the user-defined counter name, includes the accumulated and frozen counts (the count units label will also appear). Also included, is the date and time stamp for the frozen count. The **COUNTER 1 MICROS** value refers to the microsecond portion of the time stamp.

6.2.9 SELECTOR SWITCHES

PATH: ACTUAL VALUES ⇨ STATUS ⇨⇩ SELECTOR SWITCHES

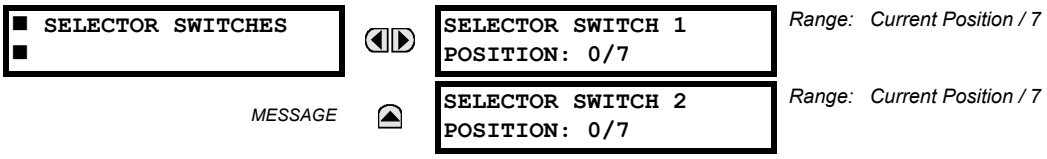

The display shows both the current position and the full range. The current position only (an integer from 0 through 7) is the actual value.

6.2.10 FLEX STATES

PATH: ACTUAL VALUES ⇨ STATUS ⇨⇩ FLEX STATES

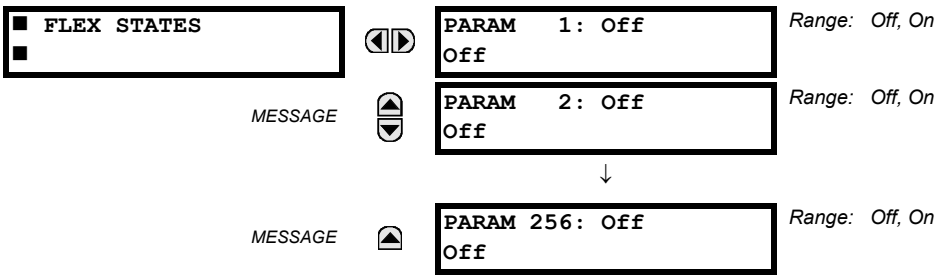

There are 256 FlexState™ bits available. The second line value indicates the state of the given FlexState bit.

6.2.11 TIME OF DAY TIMERS

PATH: ACTUAL VALUES ⇨ STATUS ⇨⇩ TIME OF DAY TIMERS

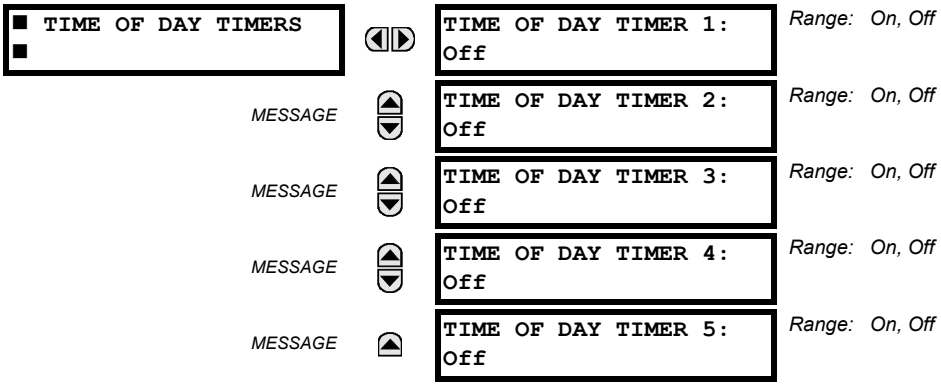

The current state of each time of day timer is displayed in this menu.

6.2.12 ETHERNET

PATH: ACTUAL VALUES ⇨ STATUS ⇨⇩ ETHERNET

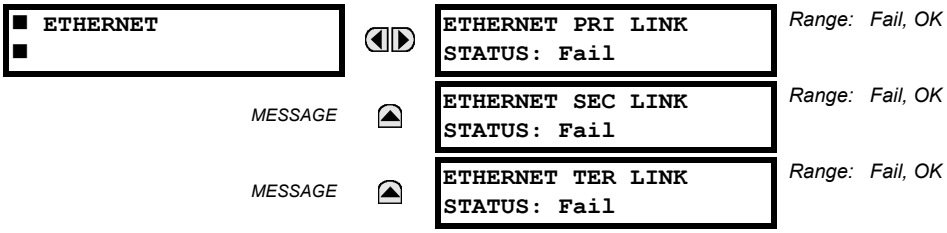

These values indicate the status of the first, second, and third Ethernet links.

6.2.13 REAL TIME CLOCK SYNCHRONIZING

PATH: ACTUAL VALUES ⇨⇩ STATUS ⇨⇩ REAL TIME CLOCK SYNCHRONIZING

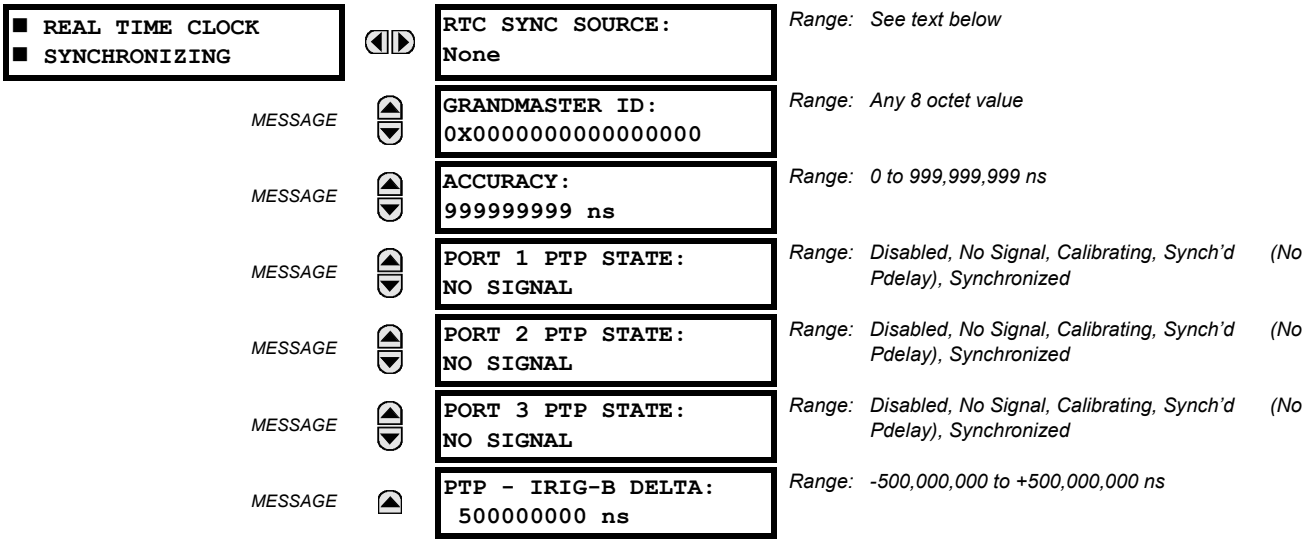

The **RTC SYNC SOURCE** actual value is the time synchronizing source the relay is using at present. Possible sources are: Port 1 PTP Clock, Port 2 PTP Clock, Port 3 PTP Clock, IRIG-B, SNTP, and None. An actual value displays when the relay includes the IEEE 1588 software option.

The **GRANDMASTER ID** is the grandmasterIdentity code being received from the present PTP grandmaster, if any. When the relay is not using any PTP grandmaster, this actual value is zero. The grandmasterIdentity code is specified by PTP to be globally unique, so one can always know which clock is grandmaster in a system with multiple grandmaster-capable clocks.

Accuracy is the estimated maximum time error at present in the RTC, considering the quality information imbedded in the received time signal. The value 999,999,999 indicates that the magnitude of the estimated error is one second or more, or that the error cannot be estimated.

PORT 1...3 PTP STATE is the present state of the port's PTP clock. The PTP clock state is:

- **DISABLED** is the port's function setting is Disabled,
- **NO SIGNAL** if enabled but no signal from an active master has been found and selected,
- **CALIBRATING** if an active master has been selected but lock is not at present established,
- **SYNCH'D (NO PDELAY)** if the port is synchronized, but the peer delay mechanism is non-operational, and
- **SYNCHRONIZED** if synchronized.

PTP - IRIG-B DELTA is the time difference, measured in nanoseconds, between the fractional seconds portion of the time being received via PTP and that being received via IRIG-B. A positive value indicates that PTP time is fast compared to IRIG-B time.

6.2.14 DIRECT INPUTS

PATH: ACTUAL VALUES ⇨ STATUS ⇨⇩ DIRECT INPUTS

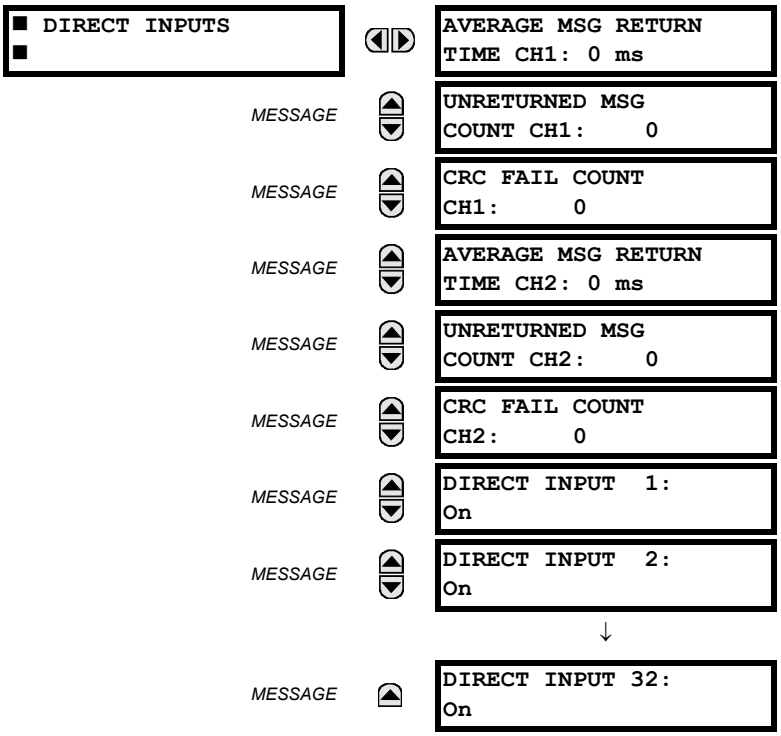

The **AVERAGE MSG RETURN TIME** is the time taken for direct output messages to return to the sender in a direct input/output ring configuration (this value is not applicable for non-ring configurations). This is a rolling average calculated for the last ten messages. There are two return times for dual-channel communications modules.

The **UNRETURNED MSG COUNT** values (one per communications channel) count the direct output messages that do not make the trip around the communications ring. The **CRC FAIL COUNT** values (one per communications channel) count the direct output messages that have been received but fail the CRC check. High values for either of these counts may indicate on a problem with wiring, the communication channel, or one or more relays. The **UNRETURNED MSG COUNT** and **CRC FAIL COUNT** values can be cleared using the **CLEAR DIRECT I/O COUNTERS** command.

The **DIRECT INPUT 1** to **DIRECT INPUT (32)** values represent the state of each direct input.

6.2.15 DIRECT DEVICES STATUS

PATH: ACTUAL VALUES ⇨ STATUS ⇨⇩ DIRECT DEVICES STATUS

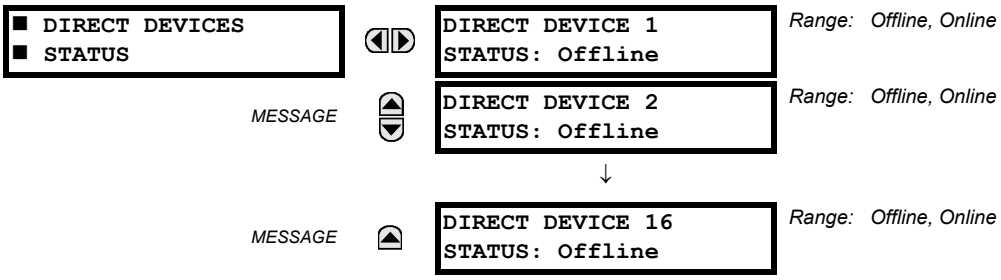

These actual values represent the state of direct devices 1 through 16.

6.2.16 IEC 61850 GOOSE INTEGERS

PATH: ACTUAL VALUES ⇨⇩ STATUS ⇨⇩ IEC 61850 GOOSE UINTEGERS

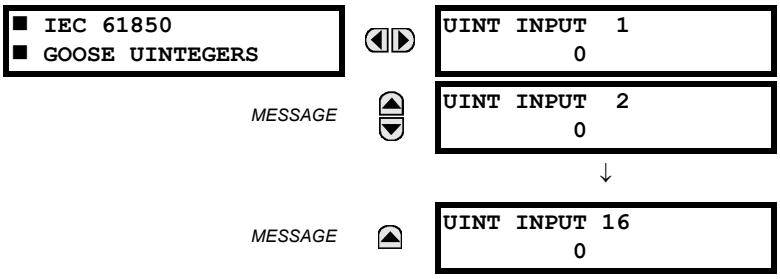

The C70 Capacitor Bank Protection and Control System is provided with optional IEC 61850 communications capability. This feature is specified as a software option at the time of ordering. See the Order Codes section in chapter 2 for details.

The IEC 61850 GGIO5 integer input data points are displayed in this menu. The GGIO5 integer data values are received via IEC 61850 GOOSE messages sent from other devices.

6.2.17 REMAINING CONNECTION STATUS

PATH: ACTUAL VALUES ⇨ STATUS ⇨⇩ COMM STATUS REMAINING CONNECT

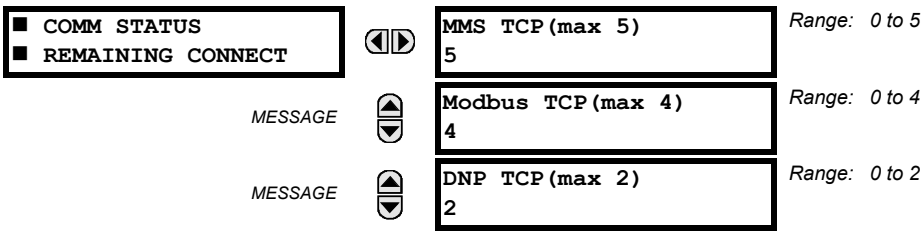

These values specify the remaining number of TCP connections still available for each protocol. The display depends on the options applicable to your device, for example the PMU entry does not display when not applicable. Each time a connection is used, the remaining number of connections decrements. When released, the remaining number of connections increments. If no connection is made over the specific protocol, the number equals the maximum number available for the specific protocol.

For example, the maximum number of Modbus TCP connections is 4. Once an EnerVista session is opened on a computer connected to the UR over Ethernet, the Modbus TCP status shows 3. If the EnerVista application is closed, the Modbus TCP status shows 4.

MMS TCP — The number of IEC 61850 connections remaining.

6.2.18 PARALLEL REDUNDANCY PROTOCOL (PRP) STATUS

The Parallel Redundancy Protocol (PRP) defines a redundancy protocol for high availability in substation automation networks.

PATH: ACTUAL VALUES ⇨ STATUS ⇨⇩ PRP STATUS

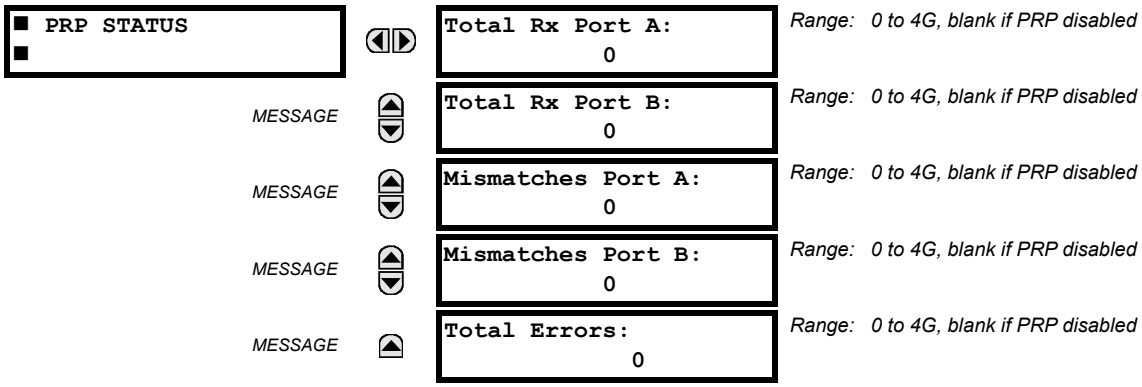

The C70 Capacitor Bank Protection and Control System is provided with optional PRP capability. This feature is specified as a software option at the time of ordering. See the *Order Codes* section in chapter 2 for details.

TOTAL RECEIVED PORT A is a counter for total messages received (either from DANPs or from SANs) on Port A.

TOTAL RECEIVED PORT B is a counter for total messages received (either from DANPs or from SANs) on Port B.

MISMATCHES PORT A is a counter for total messages received with an error on Port A (PRP frame, but port received through and LAN ID in the frame do not match).

MISMATCHES PORT B is a counter for total messages received with an error on Port B (PRP frame, but port received through and LAN ID in the frame do not match).

TOTAL ERRORS is a counter for total messages received with an error (bad port code, frame length too short).

a) UR CONVENTION FOR MEASURING POWER AND ENERGY

The following figure illustrates the conventions established for use in UR-series relays.

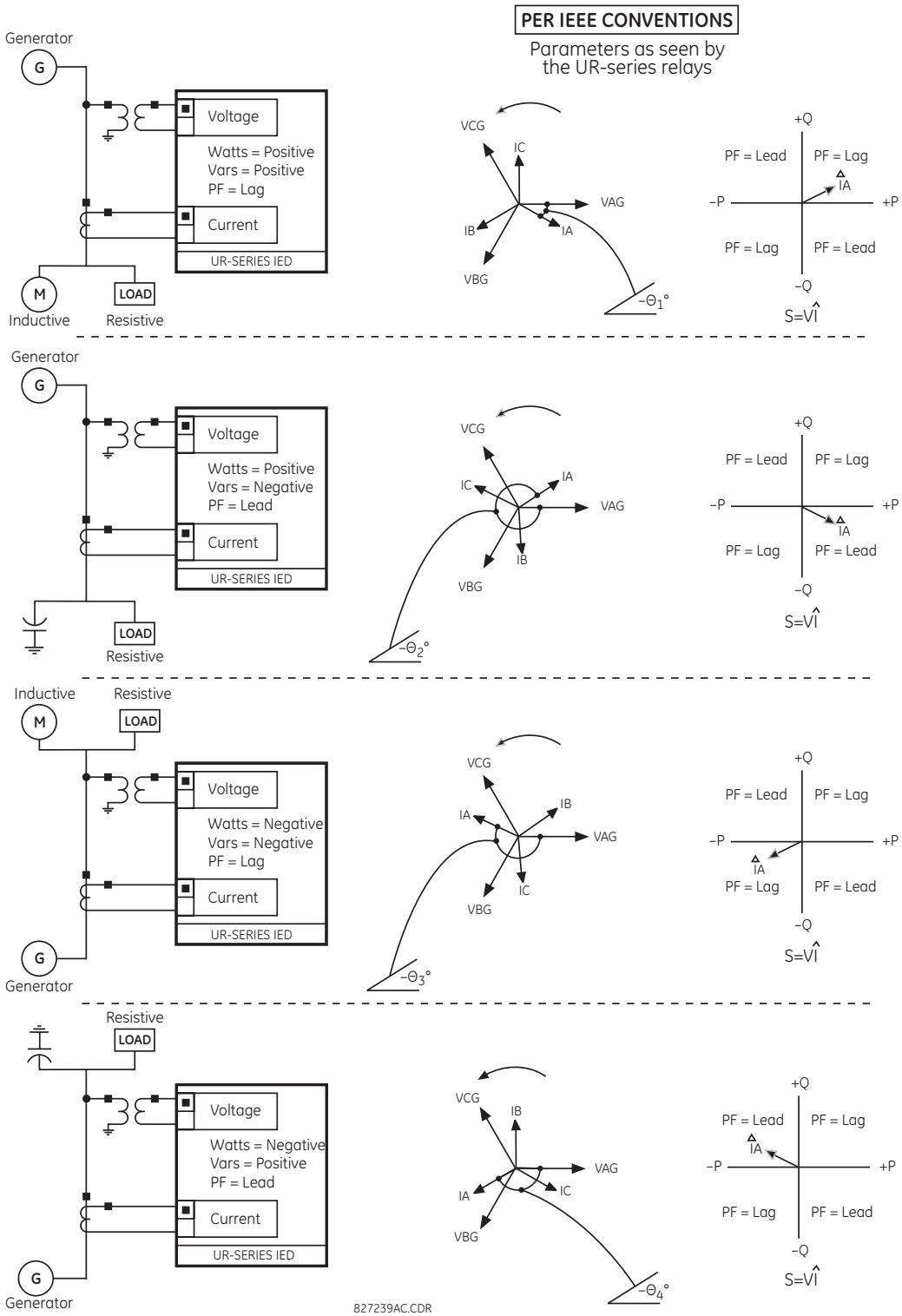

Figure 6–1: FLOW DIRECTION OF SIGNED VALUES FOR WATTS AND VARS

b) UR CONVENTION FOR MEASURING PHASE ANGLES

All phasors calculated by UR-series relays and used for protection, control and metering functions are rotating phasors that maintain the correct phase angle relationships with each other at all times.

For display and oscillography purposes, all phasor angles in a given relay are referred to an AC input channel pre-selected by the **SETTINGS** ⇨⇩ **SYSTEM SETUP** ⇨⇩ **POWER SYSTEM** ⇨⇩ **FREQUENCY AND PHASE REFERENCE** setting. This setting defines a particular AC signal source to be used as the reference.

The relay will first determine if any "Phase VT" bank is indicated in the source. If it is, voltage channel VA of that bank is used as the angle reference. Otherwise, the relay determines if any "Aux VT" bank is indicated; if it is, the auxiliary voltage channel of that bank is used as the angle reference. If neither of the two conditions is satisfied, then two more steps of this hierarchical procedure to determine the reference signal include "Phase CT" bank and "Ground CT" bank.

If the AC signal pre-selected by the relay upon configuration is not measurable, the phase angles are not referenced. The phase angles are assigned as positive in the leading direction, and are presented as negative in the lagging direction, to more closely align with power system metering conventions. This is illustrated below.

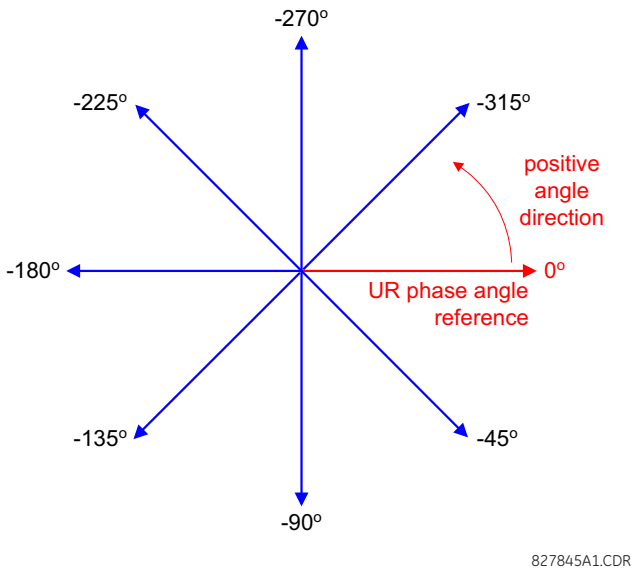

Figure 6–2: UR PHASE ANGLE MEASUREMENT CONVENTION

c) UR CONVENTION FOR MEASURING SYMMETRICAL COMPONENTS

The UR-series of relays calculate voltage symmetrical components for the power system phase A line-to-neutral voltage, and symmetrical components of the currents for the power system phase A current. Owing to the above definition, phase angle relations between the symmetrical currents and voltages stay the same irrespective of the connection of instrument transformers. This is important for setting directional protection elements that use symmetrical voltages.

For display and oscillography purposes the phase angles of symmetrical components are referenced to a common reference as described in the previous sub-section.

WYE-CONNECTED INSTRUMENT TRANSFORMERS:

- ABC phase rotation:

$$V\_0 = \frac{1}{3}(V_{AG} + V_{BG} + V_{CG})$$

$$V\_1 = \frac{1}{3}(V_{AG} + aV_{BG} + a^2V_{CG})$$

$$V\_2 = \frac{1}{3}(V_{AG} + a^2V_{BG} + aV_{CG})$$

- ACB phase rotation:

$$V\_0 = \frac{1}{3}(V_{AG} + V_{BG} + V_{CG})$$

$$V\_1 = \frac{1}{3}(V_{AG} + a^2V_{BG} + aV_{CG})$$

$$V\_2 = \frac{1}{3}(V_{AG} + aV_{BG} + a^2V_{CG})$$

The above equations apply to currents as well.

DELTA-CONNECTED INSTRUMENT TRANSFORMERS:

- ABC phase rotation:

$$V\_0 = \text{N/A}$$
$$V\_1 = \frac{1\angle -30^\circ}{3\sqrt{3}}(V_{AB} + aV_{BC} + a^2V_{CA})$$
$$V\_2 = \frac{1\angle 30^\circ}{3\sqrt{3}}(V_{AB} + a^2V_{BC} + aV_{CA})$$

- ACB phase rotation:

$$V\_0 = \text{N/A}$$
$$V\_1 = \frac{1\angle 30^\circ}{3\sqrt{3}}(V_{AB} + a^2V_{BC} + aV_{CA})$$
$$V\_2 = \frac{1\angle -30^\circ}{3\sqrt{3}}(V_{AB} + aV_{BC} + a^2V_{CA})$$

The zero-sequence voltage is not measurable under the Delta connection of instrument transformers and is defaulted to zero. The table below shows an example of symmetrical components calculations for the ABC phase rotation.

Table 6–1: SYMMETRICAL COMPONENTS CALCULATION EXAMPLE

SYSTEM VOLTAGES, SEC. V *						VT CONN.	RELAY INPUTS, SEC. V			SYMM. COMP, SEC. V		
V_{AG}	V_{BG}	V_{CG}	V_{AB}	V_{BC}	V_{CA}		F5AC	F6AC	F7AC	V_0	V_1	V_2
13.9 ∠0°	76.2 ∠–125°	79.7 ∠–250°	84.9 ∠–313°	138.3 ∠–97°	85.4 ∠–241°	WYE	13.9 ∠0°	76.2 ∠–125°	79.7 ∠–250°	19.5 ∠–192°	56.5 ∠–7°	23.3 ∠–187°
UNKNOWN (only V_1 and V_2 can be determined)			84.9 ∠0°	138.3 ∠–144°	85.4 ∠–288°	DELTA	84.9 ∠0°	138.3 ∠–144°	85.4 ∠–288°	N/A	56.5 ∠–54°	23.3 ∠–234°

* The power system voltages are phase-referenced – for simplicity – to *VAG* and *VAB*, respectively. This, however, is a relative matter. It is important to remember that the C70 displays are always referenced as specified under **SETTINGS ⇨⇩ SYSTEM SETUP ⇨⇩ POWER SYSTEM ⇨⇩ FREQUENCY AND PHASE REFERENCE**.

The example above is illustrated in the following figure.

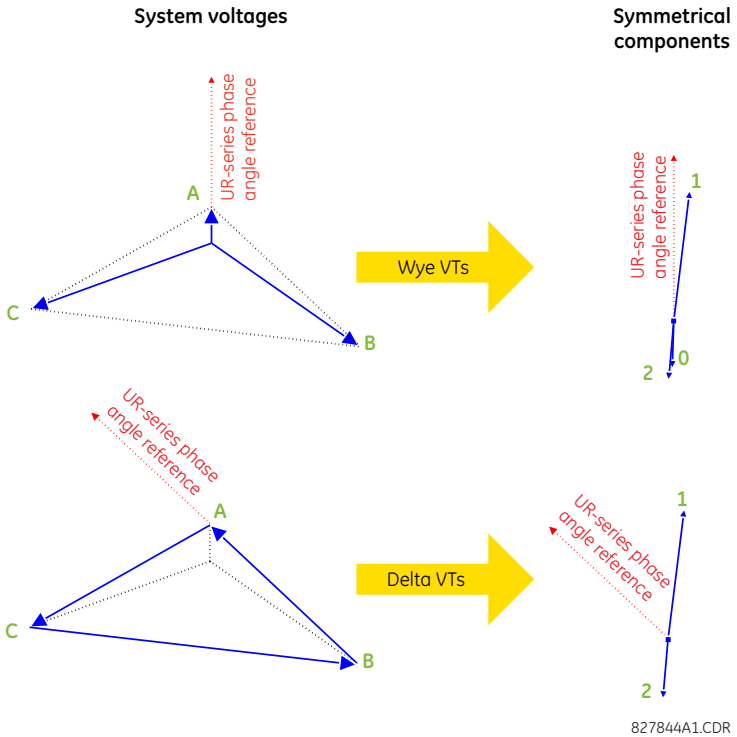

Figure 6–3: MEASUREMENT CONVENTION FOR SYMMETRICAL COMPONENTS

a) MAIN MENU

PATH: ACTUAL VALUES ⇨⇩ METERING ⇨⇩ SOURCE SRC1

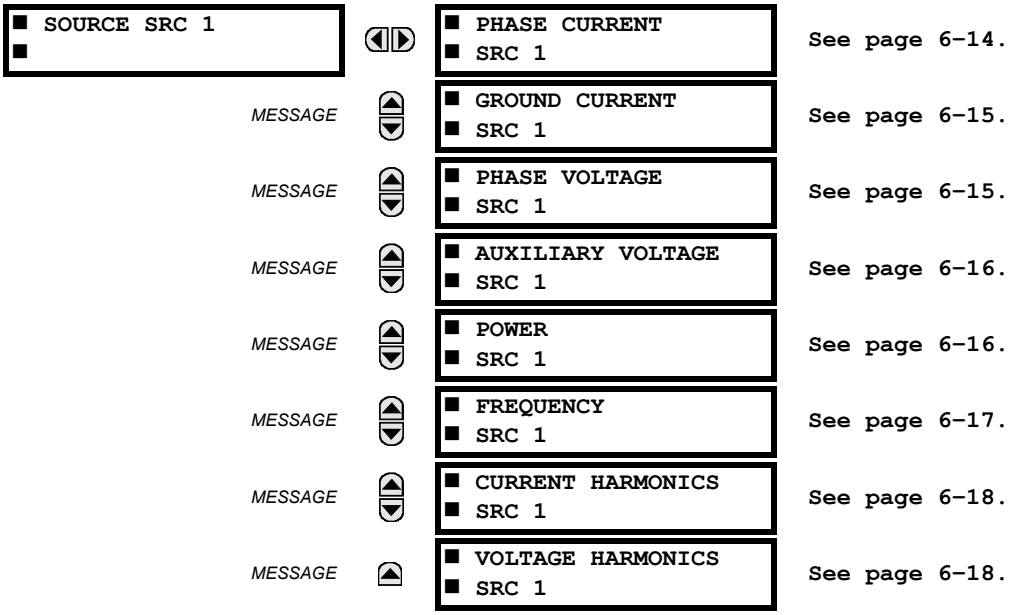

This menu displays the metered values available for each source.

Metered values presented for each source depend on the phase and auxiliary VTs and phase and ground CTs assignments for this particular source. For example, if no phase VT is assigned to this source, then any voltage, energy, and power values will be unavailable.

6

b) PHASE CURRENT METERING

PATH: ACTUAL VALUES ⇨⇩ METERING ⇨ SOURCE SRC 1 ⇨ PHASE CURRENT

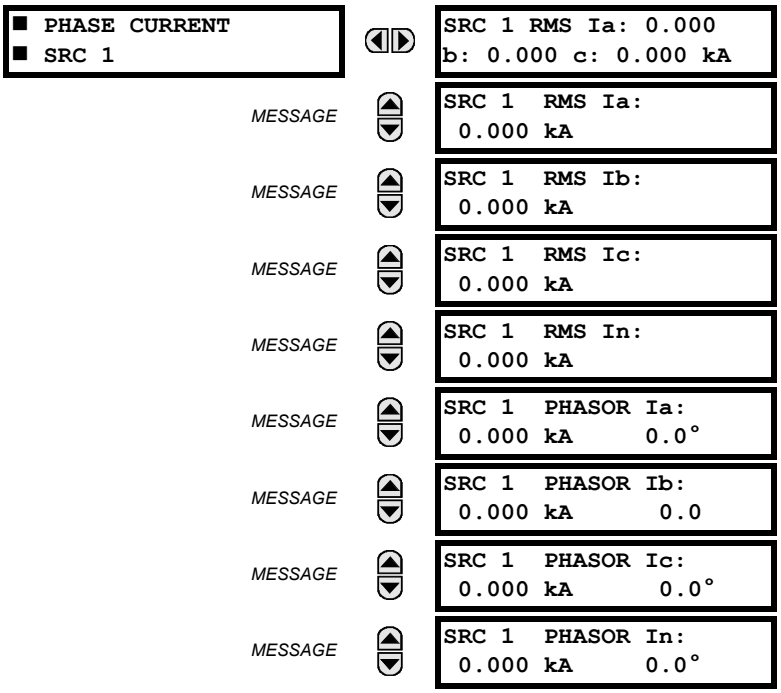

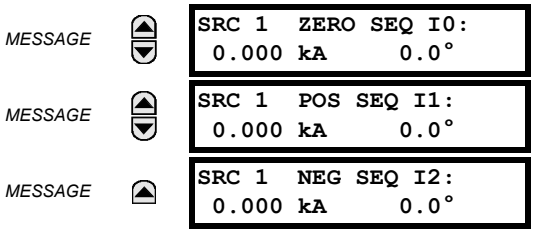

The metered phase current values are displayed in this menu. The "SRC 1" text will be replaced by whatever name was programmed by the user for the associated source (see **SETTINGS ⇨⇩ SYSTEM SETUP ⇨⇩ SIGNAL SOURCES**).

c) GROUND CURRENT METERING

PATH: ACTUAL VALUES ⇨⇩ METERING ⇨ SOURCE SRC 1 ⇨⇩ GROUND CURRENT

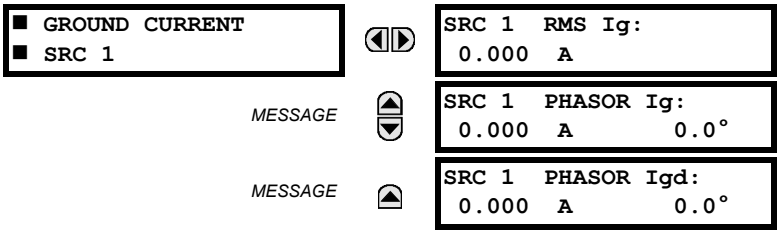

The metered ground current values are displayed in this menu. The "SRC 1" text will be replaced by whatever name was programmed by the user for the associated source (see **SETTINGS ⇨⇩ SYSTEM SETUP ⇨⇩ SIGNAL SOURCES**).

d) PHASE VOLTAGE METERING

PATH: ACTUAL VALUES ⇨⇩ METERING ⇨ SOURCE SRC 1 ⇨ PHASE VOLTAGE

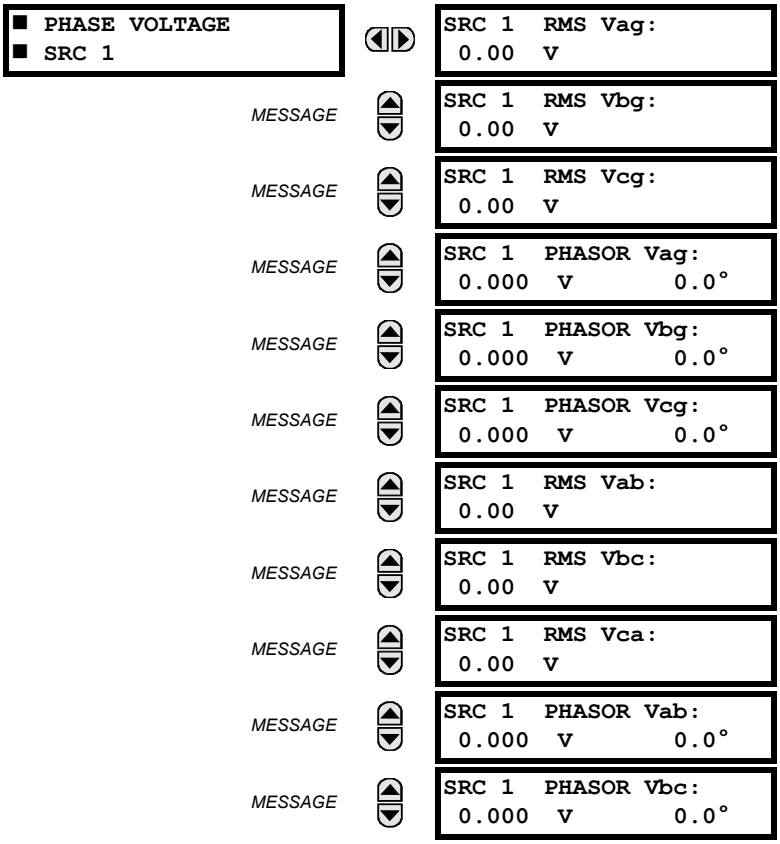

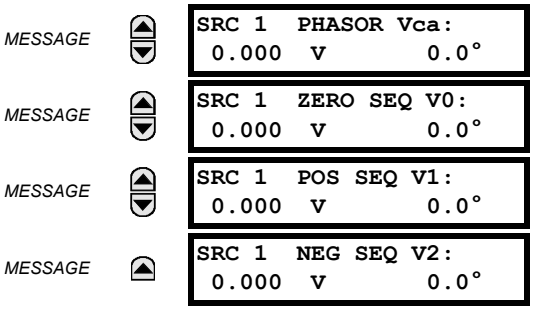

The metered phase voltage values are displayed in this menu. The "SRC 1" text will be replaced by whatever name was programmed by the user for the associated source (see SETTINGS ⇨⇩ SYSTEM SETUP ⇨⇩ SIGNAL SOURCES).

e) AUXILIARY VOLTAGE METERING

PATH: ACTUAL VALUES ⇨⇩ METERING ⇨ SOURCE SRC 1 ⇨⇩ AUXILIARY VOLTAGE

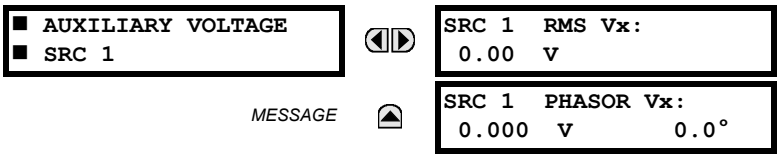

The metered auxiliary voltage values are displayed in this menu. The "SRC 1" text will be replaced by whatever name was programmed by the user for the associated source (see SETTINGS ⇨⇩ SYSTEM SETUP ⇨⇩ SIGNAL SOURCES).

f) POWER METERING

PATH: ACTUAL VALUES ⇨⇩ METERING ⇨ SOURCE SRC 1 ⇨⇩ POWER

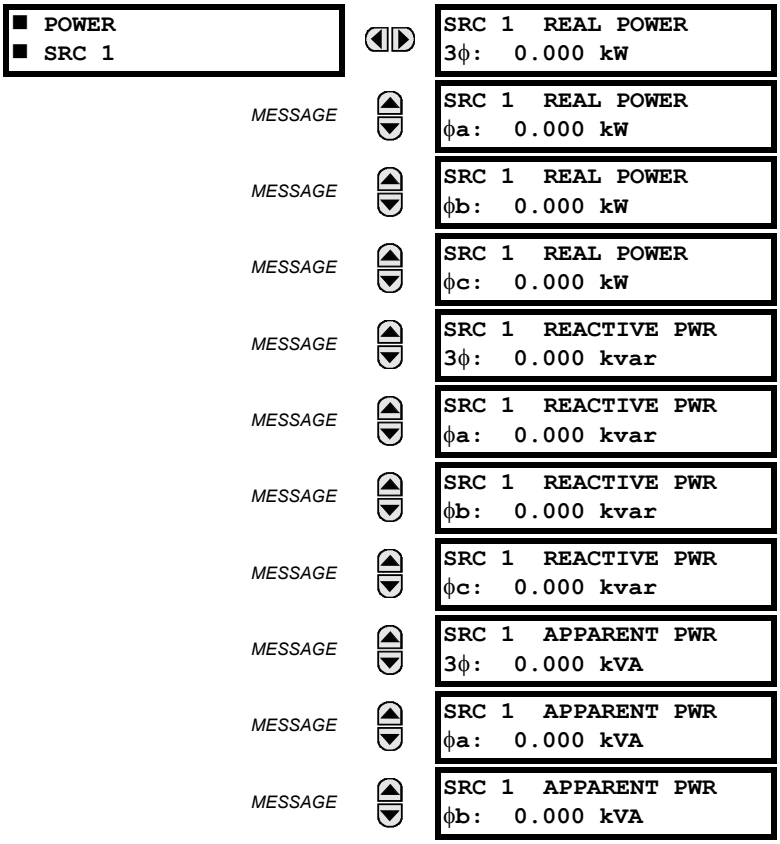

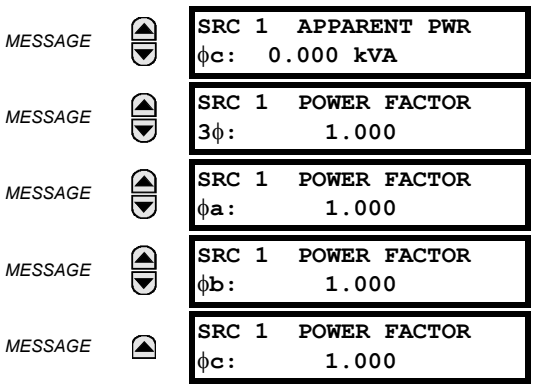

The metered values for real, reactive, and apparent power, as well as power factor, are displayed in this menu. The "SRC 1" text is replaced by whatever name was programmed by the user for the associated source (see **SETTINGS ⇨⇩ SYSTEM SETUP ⇨⇩ SIGNAL SOURCES**).

When VTs are configured in wye, the C70 calculates power in each phase and three-phase power is measured as

$$S = V_A \times \hat{I}_A + V_B \times \hat{I}_B + V_C \times \hat{I}_C \quad \textbf{(EQ 6.1)}$$

When VTs are configured in delta, the C70 does not calculate power in each phase and three-phase power is measured as

$$S = V_{AB} \times \hat{I}_A + V_{CB} \times \hat{I}_C \quad \textbf{(EQ 6.2)}$$

where

S is the apparent power

V_A, V_B, V_C, I_A, I_B, I_C are phase voltage and phase current phasors

V_{AB} and V_{CB} are phase-to-phase voltage phasors

$\hat{I}$ is the conjugate of I

g) FREQUENCY METERING

PATH: ACTUAL VALUES ⇨⇩ METERING ⇨ SOURCE SRC 1 ⇨⇩ FREQUENCY

The metered frequency values are displayed in this menu. The "SRC 1" text will be replaced by whatever name was programmed by the user for the associated source (see **SETTINGS ⇨⇩ SYSTEM SETUP ⇨⇩ SIGNAL SOURCES**).

SOURCE FREQUENCY is measured via software-implemented zero-crossing detection of an AC signal. The signal is either a Clarke transformation of three-phase voltages or currents, auxiliary voltage, or ground current as per source configuration (see the **SYSTEM SETUP ⇨⇩ POWER SYSTEM** settings). The signal used for frequency estimation is low-pass filtered. The final frequency measurement is passed through a validation filter that eliminates false readings due to signal distortions and transients.

h) CURRENT HARMONICS AND THD METERING

PATH: ACTUAL VALUES ⇨⇩ METERING ⇨ SOURCE SRC 1 ⇨⇩ CURRENT HARMONICS

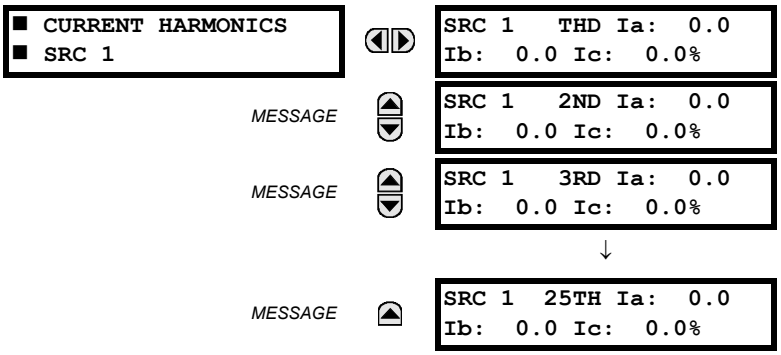

The metered current harmonics values are displayed in this menu. The "SRC 1" text will be replaced by whatever name was programmed by the user for the associated source (see SETTINGS ⇨⇩ SYSTEM SETUP ⇨⇩ SIGNAL SOURCES). Current harmonics are measured for each source for the total harmonic distortion (THD) and 2nd to 25th harmonics per phase.

i) VOLTAGE HARMONICS AND THD METERING

PATH: ACTUAL VALUES ⇨⇩ METERING ⇨ SOURCE SRC 1 ⇨⇩ VOLTAGE HARMONICS

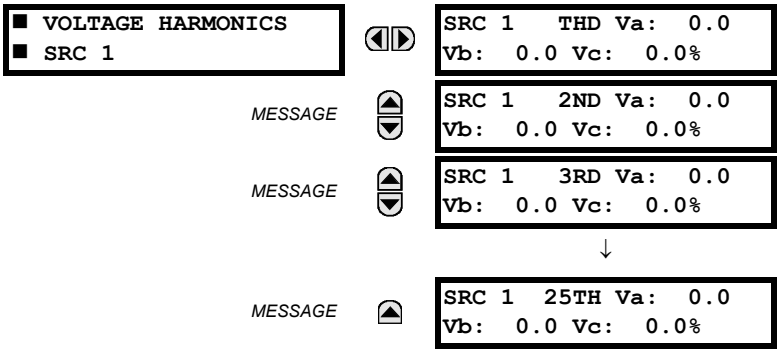

The metered voltage harmonics values are displayed in this menu. The “SRC 1” text will be replaced by the programmed name for the associated source (see the SETTINGS ⇨⇩ SYSTEM SETUP ⇨⇩ SIGNAL SOURCES menu).

To extract the 2nd to 25th voltage harmonics, each harmonic is computed on a per-phase basis, where:

$N = 64$ is the number of samples per cycle
$\omega_0 = 2\pi f$ is the angular frequency based on the system frequency (50 or 60 Hz)
$k = 1, 2, ..., N - 1$ is the index over one cycle for the Fast Fourier Transform (FFT)
m is the last sample number for the sliding window
$h = 1, 2, ..., 25$ is the harmonic number

The short-time Fourier transform is applied to the unfiltered signal:

$$F_{real}(m,h) = \frac{2}{N}\sum_{k}(f(m-k)\cdot\cos(h\cdot\omega_0\cdot t(k)))$$
$$F_{imag}(m,h) = \frac{2}{N}\sum_{k}(f(m-k)\cdot\sin(h\cdot\omega_0\cdot t(k))) \quad \textbf{(EQ 6.3)}$$
$$F_{ampl}(m,h) = \sqrt{F_{real}(m,h)^2 + F_{imag}(m,h)^2}$$

The harmonics are a percentage of the fundamental signal obtained as a ratio of harmonic amplitude to fundamental amplitude multiplied by 100%. The total harmonic distortion (THD) is the ratio of the total harmonic content to the fundamental:

$$\text{THD} = \sqrt{F_2^2 + F_3^2 + \ldots + F_{25}^2} \quad \textbf{(EQ 6.4)}$$

NOTE

Voltage harmonics are calculated only for Wye connected phase VTs. Ensure the SYSTEM SETUP ⇨ AC INPUTS ⇨⇩ VOLTAGE BANK F5 ⇨⇩ PHASE VT XX CONNECTION setting is "Wye" to enable voltage harmonics metering.

6.3.3 TRACKING FREQUENCY

PATH: ACTUAL VALUES ⇨⇩ METERING ⇨⇩ TRACKING FREQUENCY

The tracking frequency is displayed here. The frequency is tracked based on the selection of the reference source with the **FREQUENCY AND PHASE REFERENCE** setting in the SETTINGS ⇨⇩ SYSTEM SETUP ⇨⇩ POWER SYSTEM menu. See the Power System section of chapter 5 for details.

6.3.4 FLEXELEMENTS

PATH: ACTUAL VALUES ⇨⇩ METERING ⇨⇩ FLEXELEMENTS ⇨ FLEXELEMENT 1(16)

The operating signals for the FlexElements are displayed in pu values using the following definitions of the base units.

Table 6–2: FLEXELEMENT BASE UNITS

DCmA	BASE = maximum value of the **DCMA INPUT MAX** setting for the two transducers configured under the +IN and –IN inputs.
FREQUENCY	f_{BASE} = 1 Hz
PHASE ANGLE	φ_{BASE} = 360 degrees (see the UR angle referencing convention)
POWER FACTOR	PF_{BASE} = 1.00
RTDs	BASE = 100°C
SOURCE CURRENT	I_{BASE} = maximum nominal primary RMS value of the +IN and –IN inputs
SOURCE POWER	P_{BASE} = maximum value of $V_{BASE} \times I_{BASE}$ for the +IN and –IN inputs
SOURCE THD & HARMONICS	BASE = 1%
SOURCE VOLTAGE	V_{BASE} = maximum nominal primary RMS value of the +IN and –IN inputs

6.3.5 CAPACITOR CONTROL

PATH: ACTUAL VALUES ⇨⇩ METERING ⇨⇩ CAPACITOR CONTROL

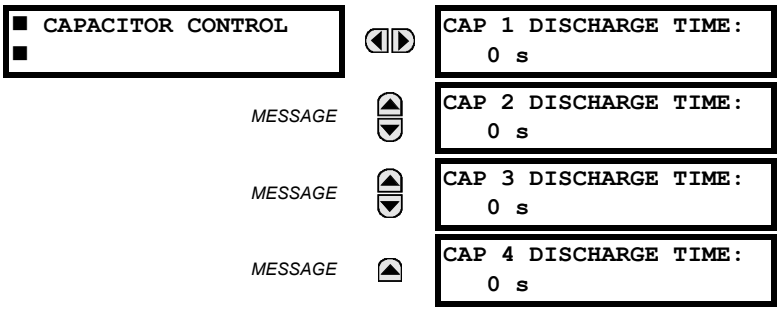

These values indicate the time remaining before the next permissible close operation for each of the four capacitor banks.

a) MAIN MENU

PATH: ACTUAL VALUES ⇨⇩ METERING ⇨⇩ CAPACITOR BANK

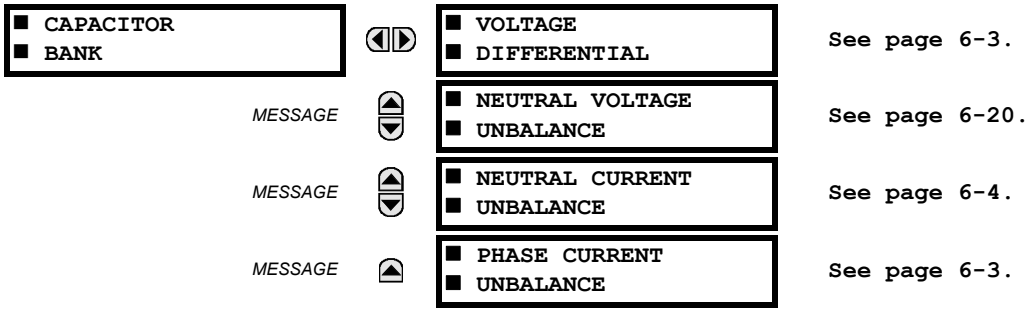

The capacitor bank menu contains the actual values for the voltage differenital, neutral voltage unbalance, phase current unbalance, and neutral current unbalance elements.

b) VOLTAGE DIFFERENTIAL

PATH: ACTUAL VALUES ⇨⇩ METERING ⇨⇩ CAPACITOR BANK ⇨ VOLTAGE DIFFERENTIAL ⇨ VOLTAGE DIFFERENTIAL 1(3)

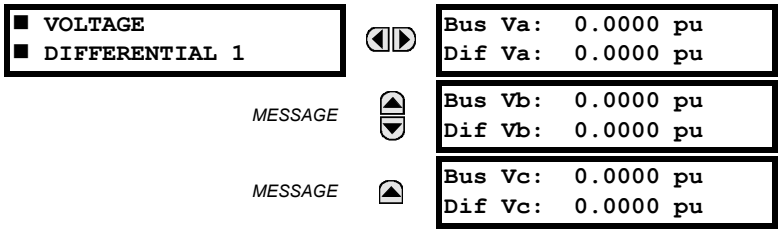

These actual values display the bus and differential signals in per-unit values of the nominal bus voltage for phases A, B, and C.

c) NEUTRAL VOLTAGE UNBALANCE

PATH: ACTUAL VALUES ⇨⇩ METERING ⇨⇩ CAPACITOR BANK ⇨ NEUTRAL VOLTAGE... ⇨ NEUTRAL VOLTAGE UNBALANCE 1(3)

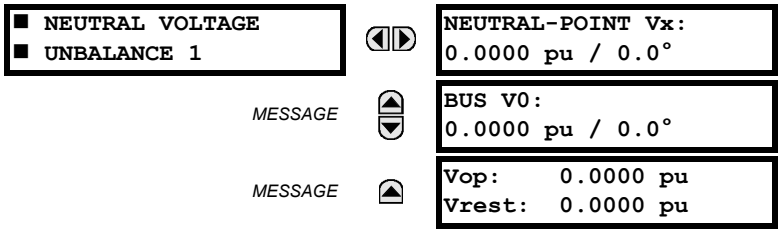

The magnitudes (in pu) and angles of the neutral point and bus V0 voltages for the neutral voltage unbalance elements are displayed in this menu. The magnitudes of the compensating operating voltage and restraining voltage (in pu) are also displayed.

d) NEUTRAL CURRENT UNBALANCE

PATH: ACTUAL VALUES ⇨⇩ METERING ⇨⇩ CAPACITOR BANK ⇨ NEUTRAL CURRENT... ⇨ NEUTRAL CURRENT UNBALANCE 1(3)

The magnitudes of the raw neutral split-phase current and compensated operating current (in per-units of the ground CT input) are displayed in this menu.

e) PHASE CURRENT UNBALANCE

PATH: ACTUAL VALUES ⇨⇩ METERING ⇨⇩ CAPACITOR BANK ⇨ PHASE CURRENT... ⇨ PHASE CURRENT UNBALANCE 1(3)

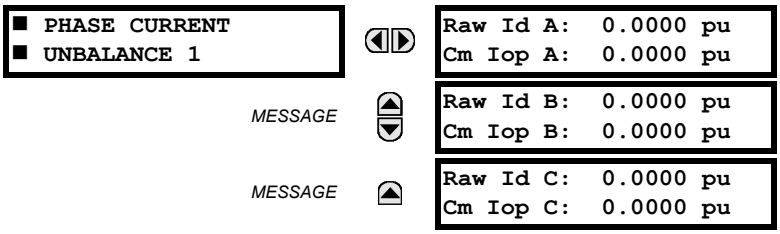

The magnitudes of the raw differential current and compensated operating currents (in per-units of the differential CT) are displayed for each phase.

6.3.7 IEC 61580 GOOSE ANALOG VALUES

PATH: ACTUAL VALUES ⇨⇩ METERING ⇨⇩ IEC 61850 GOOSE ANALOGS

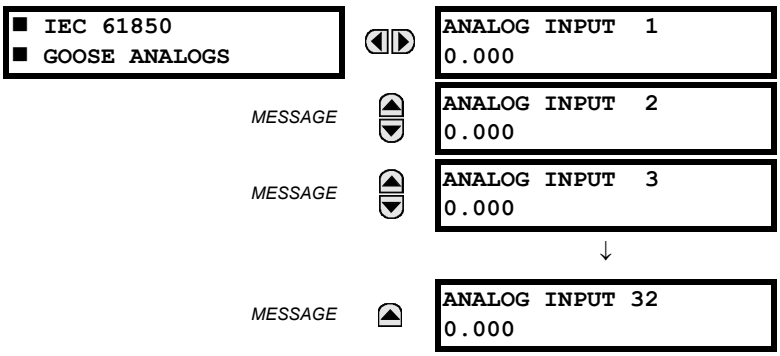

The C70 is provided with optional IEC 61850 communications capability. This feature is specified as a software option at the time of ordering. See the Order Codes section of chapter 2 for details.

The IEC 61850 GGIO3 analog input data points are displayed in this menu. The GGIO3 analog data values are received via IEC 61850 GOOSE messages sent from other devices.

6.3.8 TRANSDUCER INPUTS/OUTPUTS

PATH: ACTUAL VALUES ⇨⇩ METERING ⇨⇩ TRANSDUCER I/O DCMA INPUTS ⇨ DCMA INPUT xx

Actual values for each DCmA input channel that is enabled are displayed with the top line as the programmed channel ID and the bottom line as the value followed by the programmed units.

PATH: ACTUAL VALUES ⇨⇩ METERING ⇨⇩ TRANSDUCER I/O RTD INPUTS ⇨ RTD INPUT xx

Actual values for each RTD input channel that is enabled are displayed with the top line as the programmed channel ID and the bottom line as the value.

PATH: ACTUAL VALUES ⇨⇩ REMOTE RESOURCES ⇨⇩ FIELD UNIT U1(U8)

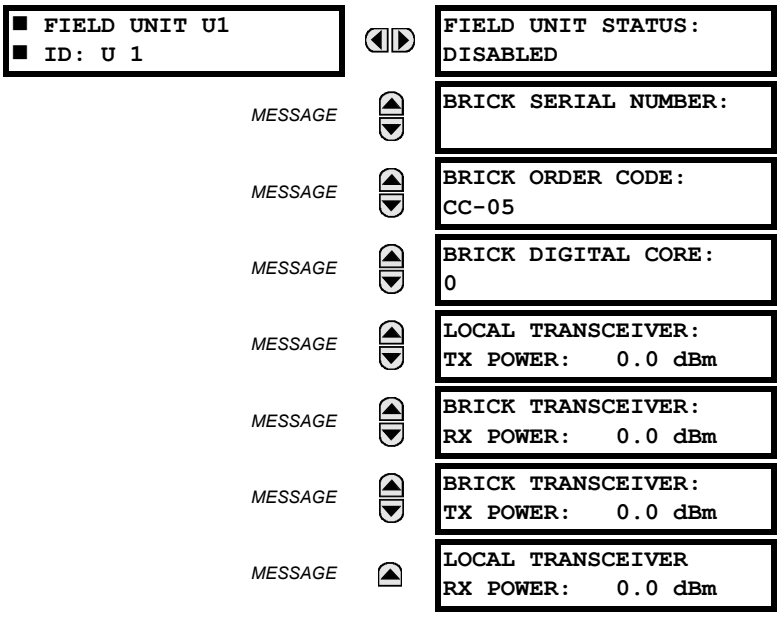

Range: Disabled, Enabled

This menu displays when using a Process Bus Module for a HardFiber Brick.

6

6.5.1 USER PROGRAMMABLE FAULT REPORTS

PATH: ACTUAL VALUES ⇨⇩ RECORDS ⇨ USER PROGRAMMABLE FAULT REPORTS

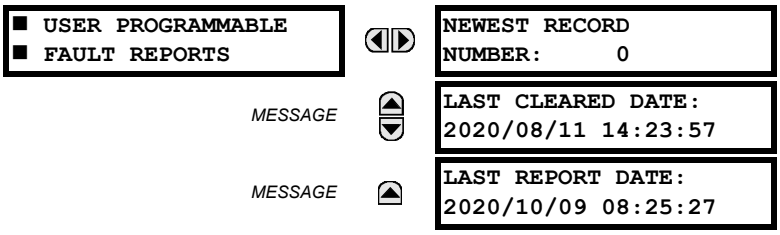

This menu displays the user-programmable fault report actual values. See the User Programmable Fault Report section in chapter 5 for additional information on this feature.

6.5.2 EVENT RECORDS

PATH: ACTUAL VALUES ⇨⇩ RECORDS ⇨ EVENT RECORDS

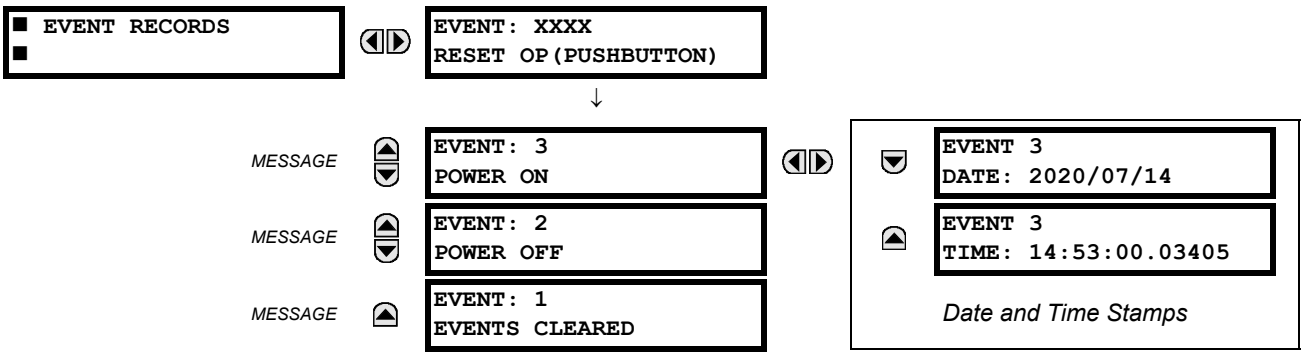

The event records menu shows the contextual data associated with up to the last 1024 events, listed in chronological order from most recent to oldest. If all 1024 event records have been filled, the oldest record will be removed as a new record is added. Each event record shows the event identifier/sequence number, cause, and date/time stamp associated with the event trigger. See the COMMANDS ⇩ CLEAR RECORDS menu for clearing event records.

Only major output operands generate events, not every operand. Elements that assert output per phase, for example, log operating phase output only without asserting the common three-phase operand event.

6.5.3 OSCILLOGRAPHY

PATH: ACTUAL VALUES ⇨⇩ RECORDS ⇨⇩ OSCILLOGRAPHY

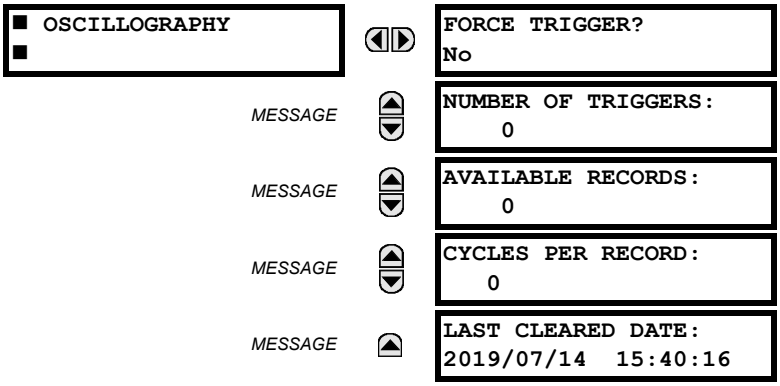

Range: No, Yes

This menu allows the user to view the number of triggers involved and number of oscillography traces available. The **CYCLES PER RECORD** value is calculated to account for the fixed amount of data storage for oscillography. See the Oscillography section of chapter 5 for additional details.

A trigger can be forced here at any time by setting "Yes" to the **FORCE TRIGGER?** command. Refer to the **COMMANDS** ⇨⇩ **CLEAR RECORDS** menu for information on clearing the oscillography records.

6.5.4 DATA LOGGER

PATH: ACTUAL VALUES ⇨⇩ **RECORDS** ⇨⇩ **DATA LOGGER**

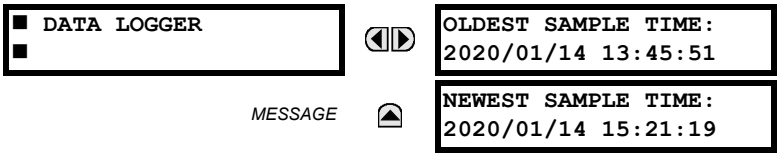

The **OLDEST SAMPLE TIME** represents the time at which the oldest available samples were taken. It is static until the log gets full, at which time it starts counting at the defined sampling rate. The **NEWEST SAMPLE TIME** represents the time the most recent samples were taken. It counts up at the defined sampling rate. If the data logger channels are defined, then both values are static.

Refer to the **COMMANDS** ⇨⇩ **CLEAR RECORDS** menu for clearing data logger records.

6.6.1 MODEL INFORMATION

PATH: ACTUAL VALUES ⇨⇩ PRODUCT INFO ⇨ MODEL INFORMATION

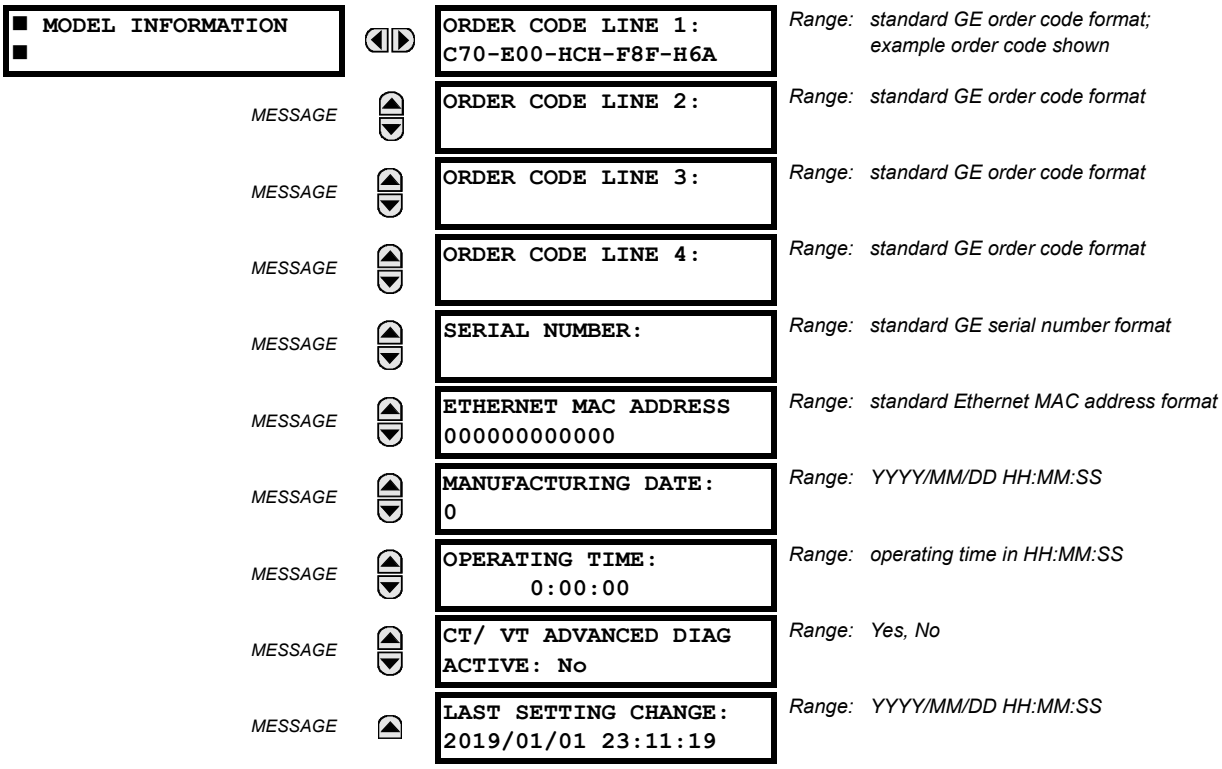

The order code, serial number, Ethernet MAC address, date and time of manufacture, and operating time are shown here.

ETHERNET MAC ADDRESS — UR devices with firmware 7.0x and above have three Ethernet ports that can be used on three networks. The MAC address displays for port 1. The MAC address for port 2 is one higher. The MAC address for port 3 is one higher than port 2. In redundant mode, the MAC addresses for ports 2 and 3 are the same as port 2.

6.6.2 FIRMWARE REVISIONS

PATH: ACTUAL VALUES ⇨⇩ PRODUCT INFO ⇨⇩ FIRMWARE REVISIONS

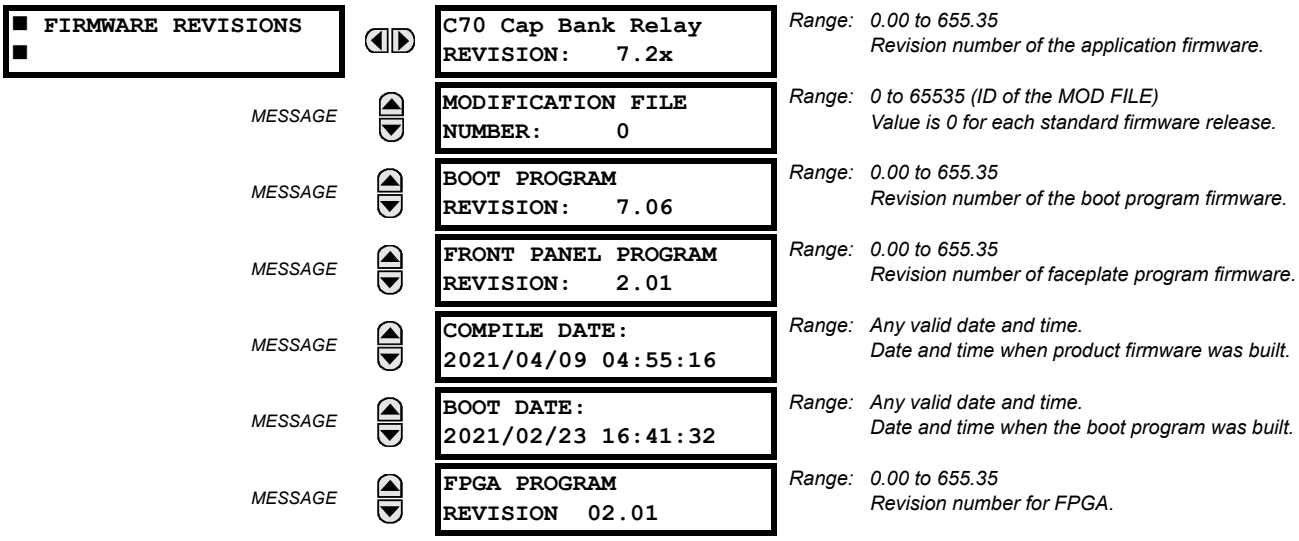

MESSAGE

```
FPGA DATE:
2013/10/09 13:13:00
```

Range: Any valid date and time.
Date and time when the FPGA was built.

The shown data is illustrative only. A modification file number of 0 indicates that, currently, no modifications have been installed.

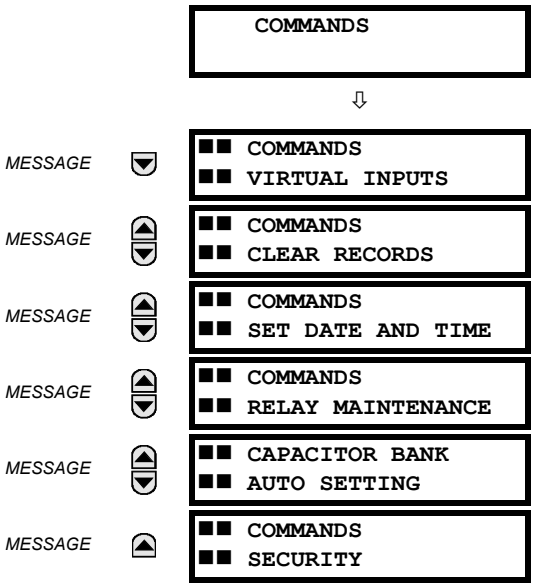

The commands menu contains relay directives intended for operations personnel. All commands can be protected from unauthorized access via the command password; see the Security section of chapter 5 for details. The following flash message appears after successfully command entry:

7.1.2 VIRTUAL INPUTS

PATH: COMMANDS ⇨ VIRTUAL INPUTS

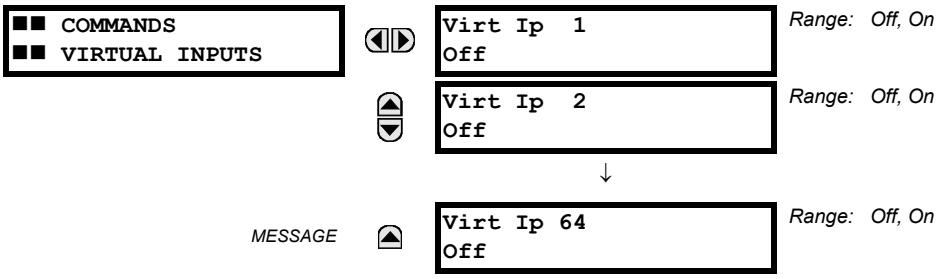

The states of up to 64 virtual inputs are changed here. The first line of the display indicates the ID of the virtual input. The second line indicates the current or selected status of the virtual input. This status will be a state off (logic 0) or on (logic 1).

7.1.3 CLEAR RECORDS

PATH: COMMANDS ⇨⇩ CLEAR RECORDS

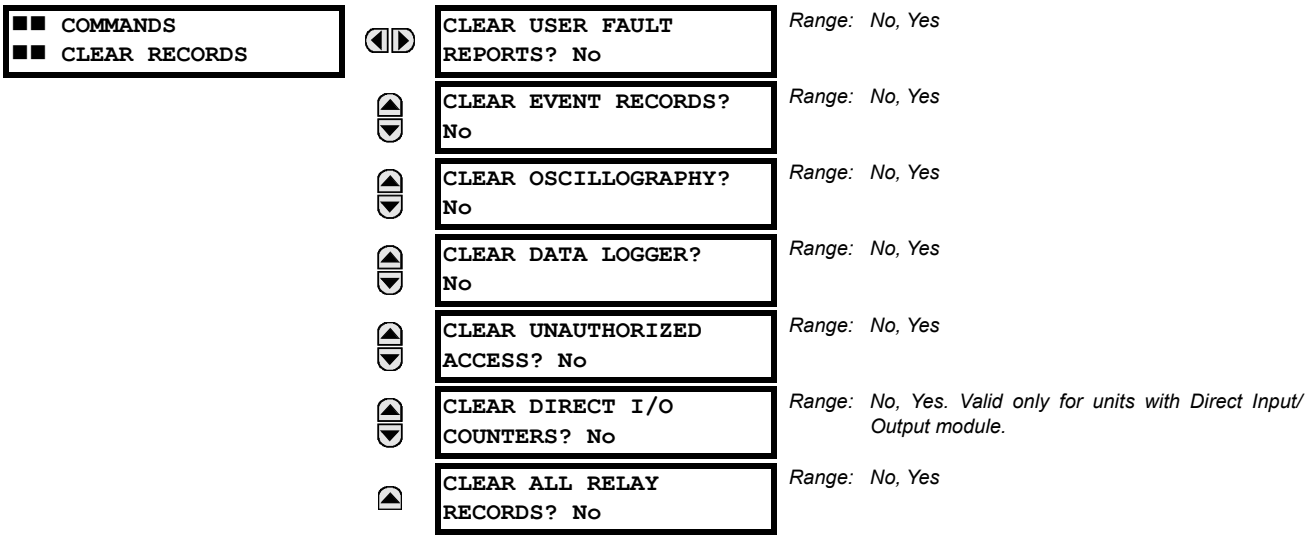

This menu contains commands for clearing historical data such as the event records. Data is cleared by changing a command setting to “Yes” and pressing the ENTER key. After clearing data, the command setting automatically reverts to “No”.

7.1.4 SET DATE AND TIME

PATH: COMMANDS ⇨⇩ SET DATE AND TIME

The date and time can be entered on the faceplate keypad. The time setting is based on the 24-hour clock. The complete date, as a minimum, must be entered to allow execution of this command. The new time and date take effect when the ENTER key is pressed.

When the relay is synchronizing to an external time source such as PTP, IRIG-B, or SNTP, the manually entered time is over-written.

The timescale of the entered time is **local time**, including daylight savings time where and when applicable.

PATH: COMMANDS ⇨⇩ RELAY MAINTENANCE

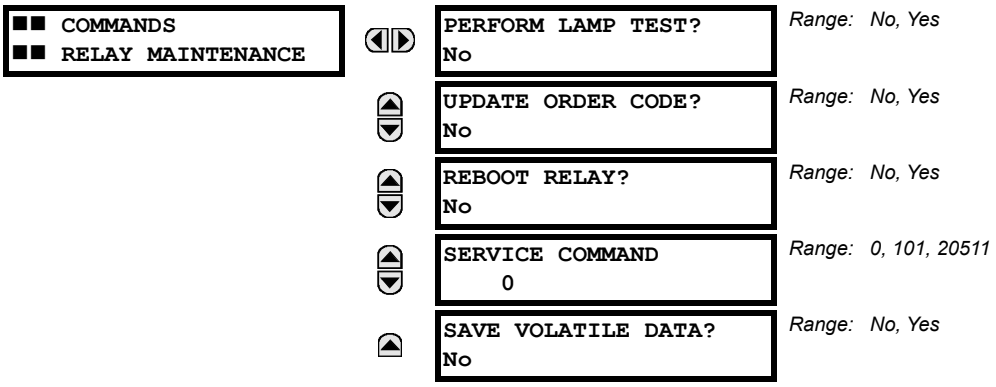

This menu contains commands for relay maintenance purposes. Commands for the lamp test and order code are activated by changing a command setting to "Yes" and pressing the ENTER key. The command setting will then automatically revert to "No". The service command is activated by entering a numerical code and pressing the ENTER key.

The **PERFORM LAMP TEST** command turns on all faceplate LEDs and display pixels for a short duration. The **UPDATE ORDER CODE** command causes the relay to scan the backplane for the hardware modules and update the order code to match. If an update occurs, the following message is shown.

```
UPDATING...
PLEASE WAIT
```

There is no impact if there have been no changes to the hardware modules. When an update does not occur, the **ORDER CODE NOT UPDATED** message will be shown.

The **REBOOT RELAY COMMAND** reboots the relay so that changes to configuration settings can take effect. In most cases, if changes are made to the configuration settings these changes do not take effect unless the relay is rebooted.

NOTE

With the CyberSentry option, the Administrator or Operator role can initiate the Reboot Relay command.

The **SERVICE COMMAND** performs specific C70 service actions. Presently, there are two service actions available. Code "20511" returns all settings to their factory default value and restarts the relay (then you re-enter IP address, restart, set unit to "Programmed"). Code "101" is used to clear factory diagnostic information stored in the non-volatile memory. If a code other than these two is entered, the command is ignored and no action is taken. Various self-checking diagnostics are performed in the background while the C70 is running, and diagnostic information is stored on the non-volatile memory from time to time based on the self-checking result. Although the diagnostic information is cleared before the C70 is shipped from the factory, the user can want to clear the diagnostic information for themselves under certain circumstances. For example, you clear diagnostic information after replacement of hardware. Once the diagnostic information is cleared, all self-checking variables are reset to their initial state and diagnostics restart from scratch.

SAVE VOLATILE DATA saves this data to compact flash memory prior to shutdown. This allows the saved data to be as recent as possible instead of relying on the periodic timer to save the data.

a) MAIN MENU

PATH: COMMANDS ⇨ CAPACITOR BANK AUTO-SETTING

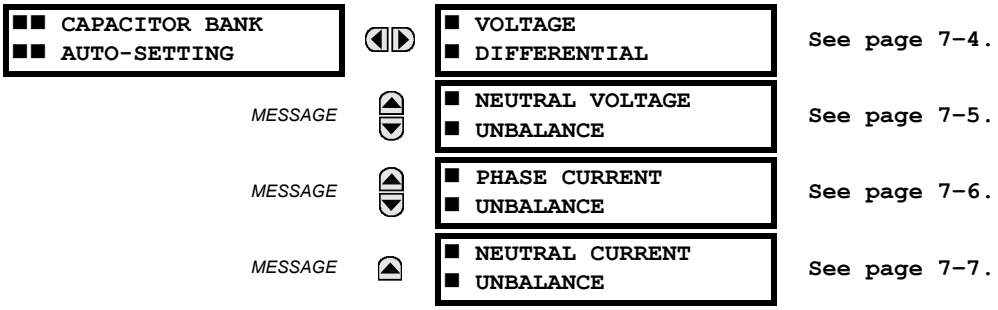

The relay provides for automatic calculations of proper balancing (matching) factors of the sensitive capacitor bank protection functions. The following screens display the suggested values of the balancing factors, and prompt the user to apply them if desired so. If applied from this command level, a given value is placed into the setting file and applied instantaneously in all setting groups of the relay with the same source as the active group during the auto-setting procedure.

b) VOLTAGE DIFFERENTIAL

PATH: COMMANDS ⇨ CAPACITOR BANK AUTO SETTING ⇨ VOLTAGE DIFFERENTIAL ⇨ VOLTAGE DIFFERENTIAL 1(3)

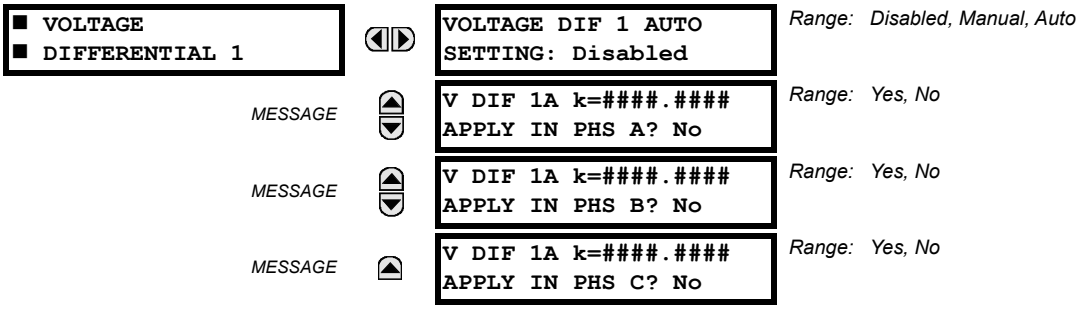

The automatic setting feature shall be used when the capacitor bank is on-line and the 87V function is enabled. For security reasons one may consider applying less sensitive settings during the auto-setting process. Switching temporarily to a different setting group with less sensitive pickup thresholds is a way to provide for the extra security.

The feature can be used with a manual acceptance of the auto-calculated coefficients (the **VOLTAGE DIF 1 AUTO SETTING** command switched to “Manual”), or with an automatic acceptance of the calculated factors (the **VOLTAGE DIF 1 AUTO SETTING** command switched to “Auto”).

The feature is used as follows.

APPLICATION WITH MANUAL SUPERVISION OF THE AUTOMATICALLY CALCULATED FACTORS:

When the **VOLTAGE DIF 1 AUTO SETTING** command is switched to “Manual”, the auto-setting screens, one for each phase, display the values that balance best the function in a given phase and prompt for permission to apply the calculated value as a new setting. When confirmed, the auto-selected value gets applied to all setting groups configured with the same source as the active group during the auto-setting procedure.

After consent to apply the calculated coefficient is received, the **k =?.???? APPLIED** confirmation message is displayed for the duration of the flash message time in the second line of the screen. The time-out period is provided for the field staff to make a note of the newly applied coefficient. However, it is possible to navigate from this screen immediately. The new setting values can be viewed under the setting menu at any time.

After the process if finished, it is recommended to disable the auto-setting feature. If not disabled by the user, the feature disables itself when user-initiated front panel interface activity ceases and the C70 display dims itself.

Certain security conditions are checked during the auto-setting process. This includes deviation from the nominal frequency and verifying that the magnitudes of all three bus voltages are between 0.85 and 1.15 pu. If these conditions are violated. the **SUPV FAIL** message is displayed in the second line.

If the voltage differential function is disabled or blocked, then the auto-setting process is not functional and the **87V NOT RUNNING** message is displayed in the second line.

APPLICATION WITH AUTOMATIC SUPERVISION OF THE AUTOMATICALLY CALCULATED FACTORS:

When the **VOLTAGE DIF 1 AUTO SETTING** command is switched to "Auto", the process of calculating and applying the balancing coefficients is fully automatic. Typical applications require setting this function to "Auto" with the bank de-energized, then energizing the capacitor bank. When the bank is energized and the five-cycle timer of the 87V function expires, the balancing coefficients are calculated and automatically applied. After the new balancing factors are applied, the function switches automatically from "Auto" to "Disabled" and 87V becomes operational. In essence, when in the "Auto" mode, the user confirmation is processed immediately after the balancing values become available. The C70 does not display the applied coefficients in "Auto" mode; rather, they are be viewed under in the **SETTINGS** menu.

If the supervisory conditions are not satisfied in the "Auto" mode within the time specified by the **DEFAULT MESSAGE TIMEOUT** setting, the **AUTO FAIL** message is displayed and the 87V function starts running with the pre-existing settings for the balancing factors.

The advantage of automatically calculating factors is that the bank is immediately protected after energization. However, due to energization inrush and distortion of voltages, the factors may not be accurate enough for the most sensitive stages. Therefore, it is a good practice to block the most sensitive stages on energization, manually adjust the factors to reduce the differential signal, and then enable the most sensitive stages.

c) NEUTRAL VOLTAGE UNBALANCE

PATH: COMMANDS ⇨ CAPACITOR BANK AUTO... ⇨ NEUTRAL VOLTAGE UNBALANCE ⇨ NEUTRAL VOLTAGE UNBALANCE 1(3)

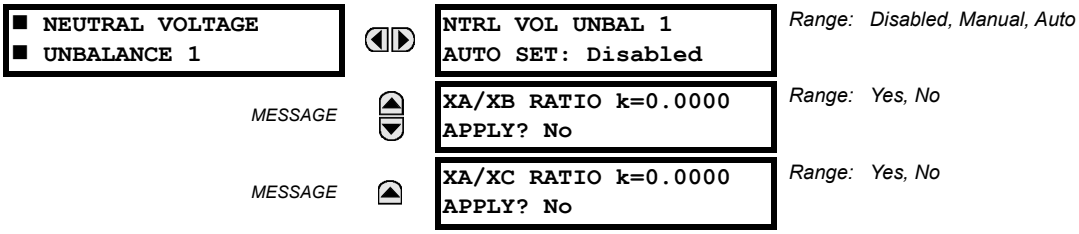

The auto-setting feature shall be used when the capacitor bank is on-line and the 59NU function is enabled. For security reasons, it may be necessary to consider applying less sensitive settings during the auto-setting process. Switching temporarily to a different setting group with less sensitive pickup thresholds is a method to provide for this extra security.

This feature can be used with a manual acceptance of the auto-calculated coefficients (the **NTRL VOL UNBAL 1 AUTO SET** command switched to "Manual"), or with an automatic acceptance of the calculated factors (the **NTRL VOL UNBAL 1 AUTO SET** command switched to "Auto").

The feature is used as follows.

MANUAL SUPERVISION OF AUTOMATICALLY CALCULATED FACTORS:

When the **NTRL VOL UNBAL 1 AUTO SET** command is switched to "Manual", the auto-setting screens (one for each of the two factors) display values that best balance the function and prompt for permission to apply the calculated value as a new setting. When confirmed, the auto-selected value is applied to all setting groups having same source as the active group during auto-setting procedure. Both ratios (X_A / X_B and X_A / X_C) must be set correctly to clear the inherent bank unbalance. After consent to apply the calculated coefficient is received via the keypad, the **k =?.???? APPLIED** confirmation message is displayed for the duration of the flash message time. The time-out period is intended for field staff to make a note of the newly applied coefficient. However, it is possible to immediately navigate from this screen. The new setting values can be viewed in the **SETTING** menu at any time.

After the process if finished, it is recommended to disable the auto-setting feature. If not manually disabled, the feature automatically disables itself when user-initiated front panel interface activity ceases and the C70 display is dimmed.

Certain security conditions are checked during the auto-setting process, such as the frequency deviation from the nominal frequency and the magnitude of the positive-sequence current above 0.1 pu. If any of these conditions are violated, the **SUPV FAIL** message is displayed in the second line.

If the neutral voltage unbalance function is disabled or blocked, the auto-setting process is not functional and the **59NU NOT RUNNING** message is displayed in the second line.

AUTOMATIC SUPERVISION OF AUTOMATICALLY CALCULATED FACTORS:

When the **NTRL VOL UNBAL 1 AUTO SET** command is switched to "Auto", the process of calculating and applying the balancing coefficients is fully automatic. Typical applications require setting this function to "Auto" with the bank de-energized, then energizing the capacitor bank. After the function is set to "Auto", it expects to read valid input signals as a result of bank energization within the display flash message time duration to calculate and apply factors; otherwise, the function is returned to "Disabled". When the bank is energized and the five-cycle timer of the 59NU function expires, the balancing coefficients are calculated and automatically applied. When the new balancing factors are applied, the function switches automatically from "Auto" to "Disabled" and the 59NU function becomes operational. In essence, the when in the "Auto" mode, the confirmation command is automatically executed immediately after the balancing values are available. The C70 does not display the applied coefficients in the "Auto" mode; rather, they are be viewed in the **SETTINGS** menu.

When the supervisory conditions are not satisfied in "Auto" mode, the **AUTO FAIL** message is displayed and the 59NU function starts running with the pre-existing settings for the balancing factors.

d) PHASE CURRENT UNBALANCE

PATH: COMMANDS ⇨ CAPACITOR BANK AUTO SETTINGS ⇨ PHASE CURRENT UNBALANCE ⇨ PHASE CURRENT UNBALANCE 1(3)

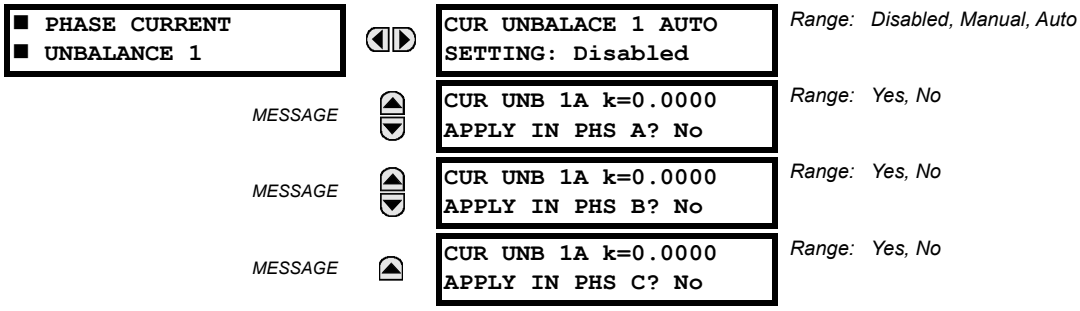

The auto-setting feature shall be used when the capacitor bank is on-line and the 60P function is enabled. For security reasons, it may be necessary to apply less sensitive settings during the auto-setting process. Switching temporarily to an alternate setting group with less sensitive pickup thresholds is a method to provide for this extra security.

The feature can be used with by manual accepting the auto-calculated coefficients (the **CUR UNBALACE 1 AUTO SETTING** command switched to "Manual") or by automatic acceptance of the calculated factors (the **CUR UNBALACE 1 AUTO SETTING** command switched to "Auto").

The feature is used as follows.

APPLICATION WITH MANUAL SUPERVISION OF THE AUTOMATICALLY CALCULATED FACTORS:

When the **CUR UNBALACE 1 AUTO SETTING** command is switched to "Manual", the auto-setting screens (one for each phase) display values that best balance the function in a given phase and prompt for permission to apply the calculated value as a new setting. When confirmed, the auto-selected value is applied to all setting groups having same source as active group during the auto-setting procedure. Note that the balancing factors can be either positive or negative, depending on which of the two banks has a lower impedance, and on the polarity of the differential CTs connected to the relay.

After user consent to apply the calculated coefficient is received, the **k =?.???? APPLIED** confirmation message is displayed for the duration of the flash message time. The timeout period is meant for field staff to make a note of the newly applied coefficient. However, it is possible to immediately navigate from this screen. The new setting values can be viewed in the **SETTING** menu at any time.

After the process is finished, it is recommended to disable the auto-setting feature. If not disabled, the feature automatically disables itself when user-initiated front panel interface activity ceases and the C70 display is dimmed.

Certain security conditions are checked during the auto-setting process, such as frequency deviation from the nominal and the magnitude of the phase currents above 0.1 pu. If any of these conditions are violated, the **SUPV FAIL** message is displayed in the second line.

If the phase unbalance function is disabled or blocked, the auto-setting process is not functional and the **60P NOT RUNNING** message is displayed in the second line.

APPLICATION WITH AUTOMATIC SUPERVISION OF THE AUTOMATICALLY CALCULATED FACTORS:

When the **CUR UNBALACE 1 AUTO SETTING** command is switched to “Manual”, the process of calculating and applying the balancing coefficients is fully automatic. Typical applications require setting this function to “Auto” with the bank de-energized, then subsequently energizing the capacitor bank. If the function is set to “Auto”, it expects to read valid input signals as a result of bank energization within the flash message duration time to calculate and apply factors. Otherwise, the value is switched backed to “Disabled”. When the bank is energized and the five-cycle timer of the 60P function expires, the balancing coefficients are calculated and automatically applied. After the new balancing factors are applied, the auto-setting function switches “Auto” to “Disabled” and the 60P element becomes operational. When in the “Auto” mode, the automatic confirmation command is executed immediately after the balancing values are available. The C70 does not display the applied coefficients in “Auto” mode; rather, they can be viewed in the **SETTINGS** menu.

If the supervisory conditions are not satisfied in the “Auto” mode within time defined by the **DEFAULT MESSAGE TIMEOUT** setting, the **AUTO FAIL** message is displayed and the 60P function starts running with the pre-existing settings for the balancing factors.

e) NEUTRAL CURRENT UNBALANCE

PATH: COMMANDS ⇨ CAPACITOR BANK AUTO... ⇨ NEUTRAL CURRENT UNBALANCE ⇨ NEUTRAL CURRENT UNBALANCE 1(3)

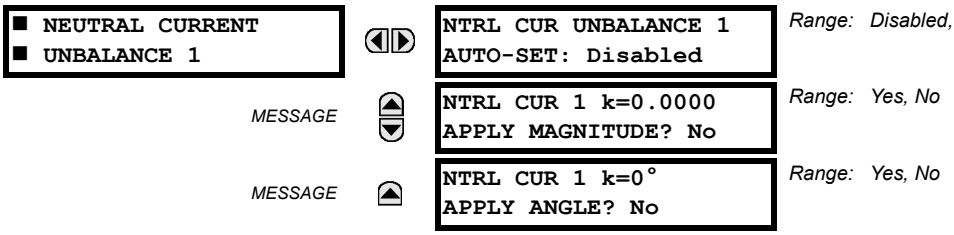

The auto-setting feature shall be used when the capacitor bank is online and the 60N function is enabled. For security reasons, it may be necessary to apply less sensitive settings during the auto-setting process. Temporarily switching to an alternate setting group with less sensitive pickup thresholds is a method of providing for this extra security.

The feature can be used with manual acceptance of the auto-calculated coefficients (the **NTRL CUR UNBALANCE 1 AUTO-SET** command switched to “Manual”), or with automatic acceptance of the calculated factors (the **NTRL CUR UNBALANCE 1 AUTO-SET** command switched to “Auto”).

The feature is used as follows.

APPLICATION WITH MANUAL SUPERVISION OF THE AUTOMATICALLY CALCULATED FACTORS:

When the **NTRL CUR UNBALANCE 1 AUTO-SET** command is switched to “Manual”, the auto-setting screens (one for magnitude and one for angle of the compensating factor) display the values that best balance the function and prompt for permission to apply the calculated value as a new setting. When confirmed, the auto-selected value is applied to all setting groups.

After user consent to apply the calculated coefficient is received, the **k =?.???? APPLIED** confirmation message is displayed for the duration of the flash message time. The timeout period is intended for field staff to make a note of the newly applied coefficient. However, it is possible to immediately navigate from this screen. The new setting values can be viewed in the **SETTING** menu at any time.

After the process if finished, it is recommended to disable the auto-setting feature. If not disabled by the user, the feature is automatically disabled when user-initiated front panel interface activity ceases and the C70 display is dimmed.

Certain security conditions are checked during the auto-setting process. If these conditions are violated, the **SUPV FAIL** message is displayed in the second line.

If the neutral voltage unbalance function is disabled or blocked, the auto-setting process is not functional and the **60N NOT RUNNING** message is displayed in the second line.

APPLICATION WITH AUTOMATIC SUPERVISION OF THE AUTOMATICALLY CALCULATED FACTORS:

When the **NTRL CUR UNBALANCE 1 AUTO-SET** command is switched to “Auto”, the process of calculating and applying the balancing coefficients is fully automatic. Typical applications require setting this function to “Auto” with the bank de-energized, then subsequently energizing the capacitor bank. After the function is set to “Auto”, it expects to read valid input signals as a result of bank energization within the display flash message time duration to calculate and apply factors. Otherwise, the function is switched backed to “Disabled”. When the bank is energized and the five-cycle timer of the 60N

function expires, the balancing coefficients are calculated and automatically applied. After the new balancing factors are applied, the auto-setting function switches automatically from “Auto” to “Disabled”, and the 60N element becomes operational. In essence, the when in the “Auto” mode, the confirmation command is automatically executed immediately after the balancing values become available. The C70 does not display the applied coefficients in the “Auto” mode; instead, they may be viewed in the **SETTINGS** menu.

If the supervisory conditions are not satisfied in the “Auto” mode within time defined by the **DEFAULT MESSAGE TIMEOUT** setting, the **AUTO FAIL** message is displayed and the 60N function starts running with the pre-existing settings for the balancing factors.

7.1.7 SECURITY

iPATH: COMMANDS ⇨⇩ SECURITY

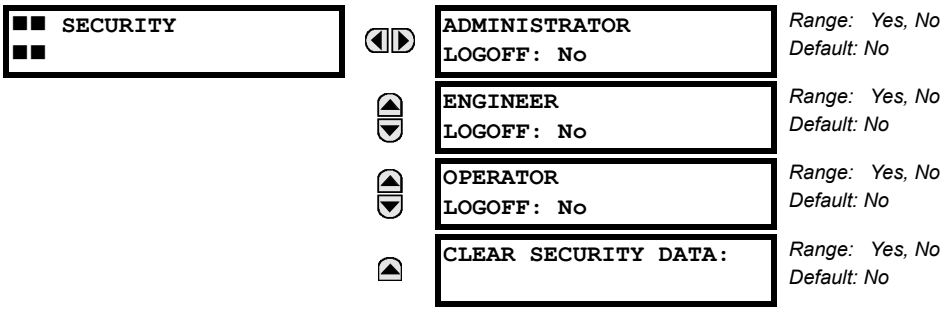

With the CyberSentry option, this setting is available to enable or disable the following commands:

- **Administrator Logoff:** Selecting ‘Yes’ allows the Supervisor to forcefully logoff an administrator session.
- **Engineer Logoff:** Selecting ‘Yes’ allows the Supervisor to forcefully logoff an engineer session.
- **Operator Logoff:** Selecting ‘Yes’ allows the Supervisor to forcefully logoff an operator session.
- **Clear Security Data**: Selecting ‘Yes’ allows the Supervisor to forcefully clear all the security logs and clears all the operands associated with the self-tests.

7.2.1 TARGETS MENU

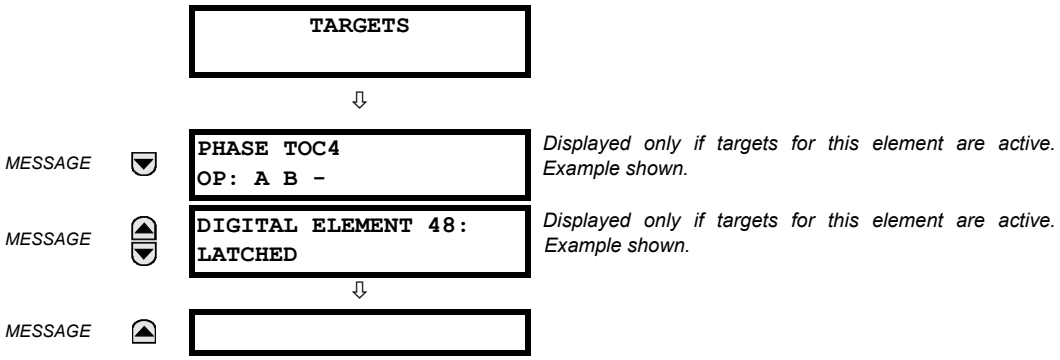

Each C70 element with a TARGET setting has a target message that when activated by its element is displayed in sequence with any other currently active target messages in the **TARGETS** menu. In the example shown, the Phase TOC4 and Digital Element 48 target settings are active and so have their targets displayed. The down arrow below the two elements indicates that there can be other active elements beyond these two.

For more information, see the description of target messages in the next section, and the Introduction to Elements section in the Settings chapter for instructions on TARGET setting.

When no targets are active, the display reads **NO TARGETS**.

7.2.2 TARGET MESSAGES

When there are no active targets, the first target to become active will cause the display to immediately default to that message. If there are active targets and the user is navigating through other messages, and when the default message timer times out (i.e. the keypad has not been used for a determined period of time), the display will again default back to the target message.

The range of variables for the target messages is described below. Phase information will be included if applicable. If a target message status changes, the status with the highest priority will be displayed.

Table 7–1: TARGET MESSAGE PRIORITY STATUS

PRIORITY	ACTIVE STATUS	DESCRIPTION
1	OP	element operated and still picked up
2	PKP	element picked up and timed out
3	LATCHED	element had operated but has dropped out

If a self test error is detected, a message appears indicating the cause of the error. For example **UNIT NOT PROGRAMMED** indicates that the minimal relay settings have not been programmed.

7.2.3 RELAY SELF-TESTS

a) DESCRIPTION

The relay performs a number of self-test diagnostic checks to ensure device integrity. The two types of self-tests (major and minor) are listed in the tables below. When either type of self-test error occurs, the Trouble LED Indicator will turn on and a target message displayed. All errors record an event in the event recorder. Latched errors can be cleared by pressing the RESET key, providing the condition is no longer present.

Major self-test errors also result in the following:

- The critical fail relay on the power supply module is de-energized.
- All other output relays are de-energized and are prevented from further operation.
- The faceplate In Service LED indicator is turned off.

- A RELAY OUT OF SERVICE event is recorded.

b) MAJOR SELF-TEST ERROR MESSAGES

The major self-test errors are outlined in this section.

```
EQUIPMENT MISMATCH:
with 2nd line detail
```

- *Latched target message*: No.
- *Description of problem*: The configuration of modules does not match the order code stored in the C70. For example, "Card F8L Missing" means that hardware module 8L is missing from slot F inside the UR device.
- *How often the test is performed*: On power up. Afterwards, the backplane is checked for missing cards every five seconds.
- *What to do*: Check all modules against the order code, ensure they are inserted properly, and cycle control power. If the problem persists, contact the factory.

```
FLEXLOGIC ERROR:
with 2nd line detail
```

- *Latched target message*: No.
- *Description of problem*: A FlexLogic equation is incorrect.
- *How often the test is performed*: The test is event driven, performed whenever FlexLogic equations are modified.
- *What to do*: Finish all equation editing and use self tests to debug any errors.

```
UNIT NOT PROGRAMMED:
Check Settings
```

- *Latched target message*: No.
- *Description of problem*: The **PRODUCT SETUP** ⇨⇩ **INSTALLATION** ⇨ **RELAY SETTINGS** setting indicates the C70 is not programmed.
- *How often the test is performed*: On power up and whenever the **PRODUCT SETUP** ⇨⇩ **INSTALLATION** ⇨ **RELAY SETTINGS** setting is altered.
- *What to do*: Program all settings and then set **PRODUCT SETUP** ⇨⇩ **INSTALLATION** ⇨ **RELAY SETTINGS** to “Programmed”

```
MODULE FAILURE___:
Contact Factory (xxx)
```

- *Latched target message*: Yes.
- *Description of problem*: Module hardware failure detected. Module Failures 1 to 11 are major. The system can reboot for four of these, as follows.

  MODULE FAILURE 06 — Event message reads SYSTEM INTEGRITRY RECOVERY 06 when a reboot was required and otherwise MODULE FAILURE 06 when a failure was detected

  MODULE FAILURE 07 — Event message reads SYSTEM INTEGRITRY RECOVERY 07 when a reboot was required and otherwise MODULE FAILURE 07 when a failure was detected

  MODULE FAILURE 08 — Event message reads SYSTEM INTEGRITRY RECOVERY 08 when a reboot was required and otherwise MODULE FAILURE 08 when a failure was detected

  MODULE FAILURE 11 — Event message reads SYSTEM INTEGRITRY RECOVERY 11 when a reboot was required and otherwise MODULE FAILURE 11 when a failure was detected
- *How often the test is performed*: Module dependent.

- *What to do*: Generate the Service Report and provide it to GE customer service. The “xxx” text identifies the failed module (for example, F8L).

```
UNIT NOT CALIBRATED:
with 2nd line DSP slot
```

- *Latched target message*: Yes.
- *Description of problem*: DSP module is not calibrated or calibration data is out of range.
- *How often the test is performed*: On relay startup.
- *What to do*: The respective DSP module has to be replaced, contact factory service.

c) MINOR SELF-TEST ERROR MESSAGES

Most of the minor self-test errors can be disabled. See the settings in the User-Programmable Self-Tests section in chapter 5.

```
MODULE FAILURE___:
Contact Factory (xxx)
```

- *Latched target message*: Yes.
- *Description of problem*: Module hardware failure detected. Module Failures 12 and 31 to 33 are minor.
- *How often the test is performed*: Module dependent.
- *What to do*: Contact the factory and supply the failure code noted in the display. The “xxx” text identifies the failed module (for example, F8L).

  For Module Failure 31, a new process card hardware is available. The process card hardware has been enhanced to support new features, such as fast distance protection, Synchrophasors Frequency, and Rate of Change of Frequency calculations to conform to C37.118 - 2005 standard. The new functionality leveraging the hardware is supported with firmware revision 7.25 and above. When using an older revision of the process card with a new firmware revision (7.25), Module Failure 31 indicates the limited functionality. If your application requires the new functionality, then new process card hardware is required and otherwise you can continue using the existing hardware. To know the revision of your hardware, contact the factory.

```
IEC 61850 DATA SET:
LLN0 GOOSE# Error
```

- *Latched target message*: No.
- *Description of problem*: A data item in a configurable GOOSE data set is not supported by the C70 order code.
- *How often the test is performed*: On power up.
- *What to do*: Verify that all the items in the GOOSE data set are supported by the C70. The EnerVista UR Setup software will list the valid items. An IEC61850 client will also show which nodes are available for the C70.

```
IEC 61850 DATA SET:
LLN0 BR# Error
```

- *Latched target message*: No.
- *Description of problem*: A data item in a configurable report data set is not supported by the C70 order code.
- *How often the test is performed*: On power up.
- *What to do*: Verify that all the items in the configurable report data set are supported by the C70. The EnerVista UR Setup software will list the valid items. An IEC 61850 client will also show which nodes are available for the C70.

```
MAINTENANCE ALERT:
Replace Battery
```

- *Latched target message*: Yes.
- *Description of problem*: The battery is not functioning.
- *How often the test is performed*: The battery is monitored every five seconds. The error message displays after 60 seconds if the problem persists.
- *What to do*: Replace the battery as outlined in the Maintenance chapter.

```
DIRECT RING BREAK:
MAINTENANCE ALERT
```

- *Latched target message*: No.
- *Description of problem*: Direct input and output settings are configured for a ring, but the connection is not in a ring.
- *How often the test is performed*: Every second.
- *What to do*: Check direct input and output configuration and wiring.

```
MAINTENANCE ALERT:
Bad IRIG-B Signal
```

- *Latched target message*: No.
- *Description of problem*: A bad IRIG-B input signal has been detected.
- *How often the test is performed*: Monitored whenever an IRIG-B signal is received.
- *What to do*: Ensure the following:
  - The IRIG-B cable is properly connected.
  - Proper cable functionality (that is, check for physical damage or perform a continuity test).
  - The IRIG-B receiver is functioning.
  - Check the input signal level (it may be less than specification).

  If none of these apply, then contact the factory.

```
MAINTENANCE ALERT:
Bad PTP Signal
```

- *Latched target message*: No.
- *Description of problem*: No PTP enabled port has good PTP signal input.
- *How often the test is performed*: Activated when no acceptable signal is being received.
- *What to do*: Ensure the following:
  - The Ethernet cable(s) are properly connected.
  - At least one PTP grandmaster-capable clock is functioning.
  - If a strict power profile (PP) is enabled, that entire network is PP compliant.
  - The network is delivering PTP messages to the relay.

```
MAINTENANCE ALERT:
SNTP Failure
```

- *Latched target message*: No.
- *Description of problem*: The SNTP server is not responding.
- *How often the test is performed*: Every 10 to 60 seconds.
- *What to do*: Check that Ethernet cable(s) are properly connected. Check that configuration for the SNTP server corresponds to the actual server settings. Check connectivity to the server (ping the server IP address).

```
MAINTENANCE ALERT:
4L Discrepancy
```

- *Latched target message*: No.
- *Description of problem*: A discrepancy has been detected between the actual and desired state of a latching contact output of an installed type “4L” module.
- *How often the test is performed*: Upon initiation of a contact output state change.
- *What to do*: Verify the state of the output contact and contact the factory if the problem persists.

```
MAINTENANCE ALERT:
Oscillatory GOOSE
```

- *Latched target message*: No.
- *Description of problem*: A data item in a configurable GOOSE data set is oscillating.
- *How often the test is performed*: Upon scanning of each configurable GOOSE data set.
- *What to do*: Evaluate all logic pertaining to this item.

```
DIRECT DEVICE OFF:
COMM Path Incomplete
```

- *Latched target message*: No.
- *Description of problem*: A direct device is configured but not connected.
- *How often the test is performed*: Every second.
- *What to do*: Check direct input and output configuration and wiring.

```
RXGOOSE OFFLINE:
COMM Path Incomplete
```

- *Latched target message*: No.
- *Description of problem*: One or more GOOSE devices are not responding.
- *How often the test is performed*: Event driven. The test is performed when a device programmed to receive GOOSE messages stops receiving. This can be from 1 to 60 seconds, depending on GOOSE packets.
- *What to do*: Check GOOSE setup.

```
TEMP MONITOR:
OVER TEMPERATURE
```

- *Latched target message*: Yes.
- *Description of problem*: The ambient temperature is greater than the maximum operating temperature (+80°C).
- *How often the test is performed*: Every hour.
- *What to do*: Remove the C70 from service and install in a location that meets operating temperature standards.

```
SYSTEM EXCEPTION:
Press RESET Key
```

- *Latched target message*: Yes.
- *Description of problem*: Abnormal restart from modules being removed or inserted while the C70 is powered-up, when there is an abnormal DC supply, or as a result of internal relay failure.
- *How often the test is performed*: Event driven.

- *What to do*: Contact the factory.

```
MAINTENANCE ALERT:
FIRST ETHERNET FAIL
```

```
MAINTENANCE ALERT:
SECOND ETHERNET FAIL
```

```
MAINTENANCE ALERT:
THIRD ETHERNET FAIL
```

- *Latched target message*: Yes.
- *Description of problem*: A link loss detection on an Ethernet port. The link loss is due to unplugging the cable or the switch port being down.
- *How often the test is performed*:
- *What to do*: Check the connection.

```
PROTOTYPE FIRMWARE:
Self Test Error
```

- *Description of problem*: Seen until the builds is tagged as being 'release candidate' or 'gold' builds.
- *What to do*: Update firmware to either of these builds.

```
STORAGE MEDIA ALARM:
Self Test Error
```

- *Latched target message*: No.
- *Description of problem*: The CPU module fails to read from or write to the Compact Flash (CF) card inside the module. The CF card stores certain non-volatile data, such as event records, oscillography and datalogger records, fault report values, and non-volatile actual values. Settings are not stored in CF and hence are unaffected by this self-test.
- *How often the test is performed*: On power up. Afterwards, every time the CPU accesses the CF card for reading or writing.
- *What to do*: Contact the factory.

```
RRTD COMM FAIL:
Self Test Error
```

- *Description of problem*: Communications with remote RTD unit (RRTD) or GPM-F failed for longer than 10 seconds.
- *Latched target message*: No.
- *How often the test is performed*: Runs only if "Com2 Usage" is set to RRTD or RRTD&GPM-F. Checked every five seconds.
- *What to do*: Check COM2 port settings, check RS485 cables.

```
VOLTAGE MONITOR:
with 2nd line detail
```

- *Description of problem*: The relay detected a problem with the internal voltage rails for longer than 25 seconds.
- *Latched target message*: Yes.
- *How often the test is performed*: Every five seconds.
- *What to do*: Contact GE customer service.

```
SETTINGS SAVE ERROR:
Contact Factory
```

- *Description of problem*: The relay failed to store the settings to the flash memory.
- *Latched target message*: Yes.
- *How often the test is performed*: When a setting is changed.
- *What to do*: Contact the factory.

```
LOW ON MEMORY:
with 2nd line detail
```

- *Description of problem*: The relay periodically checks the amount of free RAM memory available and the amount of free stack available for each task against pre-defined thresholds. The second line of the self-test indicates which of the tests failed. It asserts this self-test if those tests fail.
- *Latched target message*: Yes.
- *How often the test is performed*: Every five seconds.
- *What to do*: Contact the factory.

```
WRONG TRANSCEIVER:
Self Test Error
```

- *Latched target message*: Yes.
- *Description of problem*: The type of SFP does not match the CPU type.

  T-type CPU = All ports support fiber SFPs only

  U-type CPU = Maintenance port needs RJ45 SFP and the other two ports fiber SFPs

  V-type CPU = All ports support RJ45 SFPs only
- *What to do*: A web page "SFP Transceiver Information" is provided. This page displays the type of the SFP in it. This data is to be used with the CPU type to know the cause of the problem.

```
MAINTENANCE ALERT:
SFP MODULE x FAIL
```

- *Latched target message*: No.
- *Description of problem*: A faulty SFP or unplugging the SFP would generate this self test.
- *What to do*: The web page "SFP Transceiver Information" described in the previous section applies for this self test as well. The "SFP Module Fail" has higher priority and it suppresses the "Ethernet Fail" target message. The "SFP MODULE FAIL FUNCTION" setting enables/disables this self test. The target for this self test is priority-based, with the third one being the highest priority. For example, if all three SFP modules fail, then the third SFP target is activated. If the third SFP module failure resolves, then the second SFP target is activated.

d) INSTANTANEOUS PROTECTION ELEMENTS TRIP SECURITY

Some self-tests are not fast enough to detect erroneous data and block protection elements, requiring additional measures. To secure instantaneous elements, in addition to the self-tests described, there are supervising elements that validate "fault" conditions and release IOC and differential elements operation.

These trip security elements use currents samples and phasors from the same sources as supervised protection elements to detect independently true "fault" conditions from IOC or differential. Trip security elements do not have any user settings and are enabled as soon as corresponding instantaneous elements are enabled. During laboratory testing, these elements can be disabled by activating any IED test mode via the **SETTINGS ⇨⇩ TESTING ⇨ TEST MODE FUNCTION**.

Trip security elements do not affect protection performance in any way.

Instantaneous Overcurrent

All enabled Phase IOC, Negative-Sequence, and Neutral IOCs in the active setting group are supervised by the trip security element. The goals of the IOC trip security are as follows:

- Detect erroneous operate current due to wiring or data acquisition problem resulting in one phase current dropping to zero, resulting in erroneous negative-sequence and neutral currents
- Justify current phasor magnitude increase with simultaneous current changes from samples

This is achieved by comparing current values of the current phasors and samples change with the values taken two cycles before. Additionally, trip security elements monitor "pre-fault" current to detect if operate condition is happening as a result of current decrease instead of increase.

The element is armed when there are no disturbances in currents for five cycles.

Differential elements (bus, transformer, stator)

Differential trip security runs for each differential zone. It monitors if differential current increase above the pickup setting is confirmed by the disturbance detectors for each differential zone input. When a differential zone fault occurs and at least two zone inputs carry some load, at least two disturbance detectors have to be activated. Or when there is no load at any zone inputs (zone is energized but does not carry any load), at least one disturbance detector has to be activated.

Consequently:

- If there is not any disturbance detector activation in at least one zone input — Differential trip is inhibited
- If there is just one zone input disturbance detector activation but load is present in at least two zone inputs prior to the "fault" — Differential trip is inhibited
- If there is more than one disturbance detector zone input activation — Differential trip is allowed (normal scenario)

When differential trip is inhibited by the trip security element, no setting group change is allowed.

HARDFIBER SELF-TEST ERROR MESSAGES

In addition to those provided by the standard UR-series devices, the UR devices implement HardFiber self-tests. These are listed below. Any abnormal diagnostic condition indicated by the LEDs or the critical failure relay also results in a self-test message, so troubleshooting is described here. For other relays, such at the B95^{Plus}, see that product's instruction manual.

Equipment Mismatch Major Self-Test

Description: The number or type of installed hardware modules does not match the order code stored in the CPU. The standard UR-series Equipment Mismatch self-test is extended to cover the possible presence of a Process Card.

Severity: Protection is not available and all contact outputs and shared outputs are de-asserted.

If this message appears, check all modules against the order code. Ensure they are inserted properly, and cycle the control power. If a module has intentionally been added or removed use the **Update Order Code** command to notify the relay that the current module configuration is correct.

Module Failure Major Self-Test

Description: UR-series device module hardware failure detected.

Severity: Protection is not available and all contact outputs and shared outputs are de-asserted.

If this message appears, contact the factory and supply the failure code noted in the display. Text in the message identifies the failed module (for example, H81). If operated on a Process Card failure, the Module Fail self-test seals-in (latches) till the UR-series device is restarted.

Process Bus Failure Major Self-test

Description: Mission critical data is not available via the process bus. An AC quantity is considered critical if both AC bank origins and the crosschecking settings are other than none. This self-test is also initiated by an AC input discrepancy being detected. See the description of the crosschecking setting in this manual for further information. In addition, this self-test can be initiated by user logic responding to loss of critical contact input/output or other data using the **Process Bus Failure Operand** user-programmable self-test setting. This setting is located in the **Settings > Product Setup > User-Programmable Self Test** menu.

Severity: Protection is not available and all contact outputs and shared outputs are de-asserted.

If this message appears, first rectify any Process Bus Trouble and Brick Trouble self-test errors. Check the actual value of the operand referenced by the **Process Bus Failure Operand** setting, and if "On", determine the cause and rectify.

Should the problem persist with the foregoing all clear, the cause must be an AC input discrepancy, which is typically the result of problems in the input signals to the Bricks, or faults in the Brick input conditioning hardware. If the error was annunciated the first time significant signal was encountered, suspect the former cause and check the copper connections external to the Brick. Where multiple UR-series devices have self-test errors, look for common causes.

To further isolate AC input discrepancy errors, put the relay in test-isolated mode, then one by one, temporally change an AC bank crosschecking setting to none, until the Process Bus Failure clears. Once the problem AC bank has been identified, the values from each of the two Bricks can be examined individually by temporarily mapping each to an AC bank with a single origin.

Process Bus Trouble Minor Self-Test

Description: Communications problems with one or more Bricks. The text of the message identifies the affected field units. This self-test is initiated by low received signal levels at either the Brick or Process Card end, and by the sustained failure to receive poll responses from the proper Brick.

Severity: This self-test error does not directly inhibit protection. However, the affected Brick inputs/outputs may not be available to the UR-series device.

If this message appears, check the field unit actual values. An indication of equipment mismatch means that messages are being received from a Brick, but there is a discrepancy between the settings and the actual Brick serial number, order code, and/or core number. Check that the correct core on the correct Brick is patched through to the correct Process Card port, and that the field unit settings are correct. An indication of communications loss means that no messages are being received. Check that the patching is correct, and that the Brick has power. If that is not the problem, use a professional optical fiber connector cleaning kit to clean both sides of all optical fiber connections from the Process Card through to the affected Brick. If the problem continues after cleaning, consult the factory.

Brick Trouble Minor Self-Test

Description: Brick internal self-testing has detected a trouble internal to the Brick.

Severity: This self-test error does not directly inhibit protection. However, some or all of the affected Brick inputs/outputs may not be available to the UR-series device.

If this message appears, check the Brick environment for over/under temperatures and the voltage of its power source. If the ambient temperature and supply voltage are within Brick specifications, consult the factory. Troubles resulting from a Brick output failing to respond to an output command can only be detected while the command is active, and so in this case the target is latched. A latched target can be unlatched by pressing the faceplate reset key if the command has ended, however the output may still be non-functional.

RTD Trouble Minor Self-Test

Description: The Brick is reporting that the sensed RTD field connection does not match that of an RTD or the reported DC input value is outside of the RTD temperature range, greater than 250°C (likely open sensor circuit fault) or less than -50°C (likely shorted sensor fault).

Latched: No.

If this message appears, check field RTD settings and connections.

TDR Trouble Minor Self-Test

Description: The Brick is reporting that the sensed transducer field connection does not match that of a transducer, or the reported DC input value is outside of the set transducer input range, or the minimum value setting is equal to the maximum value setting.

Latched: No.

If this message appears, check field transducer settings and connections.

8.1.1 GENERAL OPERATION

Static capacitor banks are constructed with a large number of individual capacitor elements connected in a series/parallel arrangement designed to distribute the system voltage equally among the elements. Equal distribution of voltage is important as the rate of internal insulation degradation is a highly non-linear function of element voltage, with degradation accelerating very rapidly with overvoltage greater than 10%. To obtain balanced voltages in spite of manufacturing tolerances in the capacitance of the elements, the elements are positioned in the bank according to their actual capacitance such that parallel groups have a uniform total capacitance, and a good voltage balance is obtained. However, once in service, individual elements can fail randomly upsetting the balance, increasing the stress on other elements, and causing their early failure. Early failure of an element due to unbalanced voltage predictably further unbalances the bank, leading to cascading failure.

The purpose of capacitor unbalance protection is to detect unbalance caused by element failures as soon as practical, and to either alarm the condition so that repair can be scheduled for a convenient time, or to automatically remove the bank from service to prevent deterioration in the healthy elements pending repair. A brut force method would be to directly measure the voltage across each element, operating on detecting an abnormally high voltage on any element. However, this approach is seldom economic due to the large number of voltage transducers required. Thus, the C70 supports various other methods, the suitability of each dependant on the capacitor bank configuration, and on the VTs and CTs available.

The challenge faced by all capacitor unbalance protections not using the brut force method is the increased sensitivity required due to the less than ideal number of monitoring points, and compensation for the increased effects of inherent unbalance due to manufacturing tolerance and due to system voltage unbalance.

8.1.2 BANK PHASE OVERVOLTAGE (ANSI 59B)

The capacitor unbalance protection functions discussed in the following sections are intended to detect failures in the capacitor bank itself that can result in a few capacitor elements being overstressed. However, these unbalance protection functions do not detect overstressed elements in a healthy bank that can result from external problems. Protection against overstressing elements from system overvoltages is instead provided by the bank phase overvoltage protection.

Ideally, a bank overvoltage protection should measure the voltage across each capacitor string, allowing an accurate inference of the voltage across each element in the string, assuming that the string voltage is equally divided across the elements. This is readily done in grounded wye capacitor banks by simply measuring the three system phase-to-ground voltages. For instance assuming the bank is healthy, the elements shown in the grounded banks of the figure below will each be stressed at one-ninth of system phase-to-ground voltage, allowing the inference that the elements are overstressed when the system phase-to-ground voltage exceeds nine times the element safe operating voltage limit. The true RMS value of these phase-to-ground quantities are what the bank phase overvoltage protection measures when the bus source is set for wye VTs and the bank overvoltage protection ground setpoint is set to grounded.

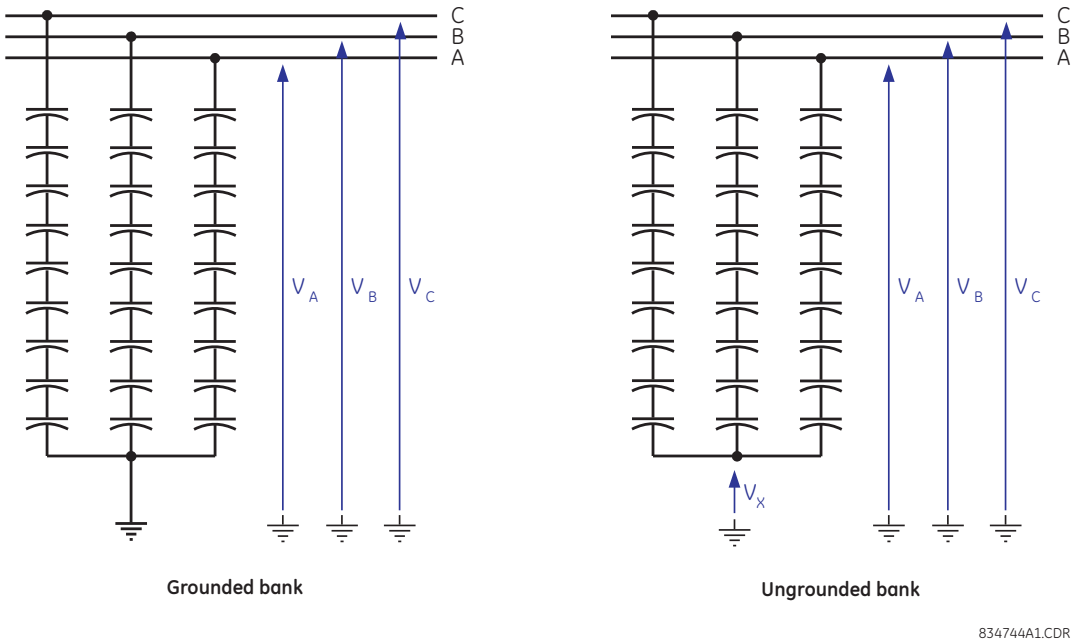

Figure 8–1: BANK OVERVOLTAGE PROTECTION FOR GROUNDED AND UNGROUNDED BANKS

For a capacitor bank that is ungrounded the voltage across the string is equal to the difference between the system phase-to-ground voltage and the bank neutral voltage. For instance elements shown in the ungrounded banks in the above figure will be overstressed when the quantities below exceed nine times the element safe operating voltage limit.

$$|V_A - V_X|_{RMS},\ |V_B - V_X|_{RMS},\ \text{or}\ |V_C - V_X|_{RMS} \qquad \textbf{(EQ 8.1)}$$

These quantities are what the bank phase overvoltage protection measures when the bus source is set for wye VTs, the auxiliary channel of the neutral source is set for a neutral voltage, and the bank overvoltage protection ground setpoint is set to ungrounded.

When the neutral voltage of an ungrounded wye capacitor bank is not measured or for some reason it is desired not to use the neutral voltage measurement, the string voltage can still be determined using the assumption that the bank is balanced. For an balanced ungrounded bank the neutral voltage V_X is:

$$V_X = \frac{1}{3}(V_A + V_B + V_C) \qquad \textbf{(EQ 8.2)}$$

As such, the A-string voltage is:

$$\begin{aligned} |V_A - V_X|_{RMS} &= \left|V_A - \frac{1}{3}(V_A + V_B + V_C)\right|_{RMS} \\ &= \frac{1}{3}|2V_A - V_B - V_C|_{RMS} \\ &= \frac{1}{3}|V_{AB} - V_{CA}|_{RMS} \end{aligned} \qquad \textbf{(EQ 8.3)}$$

Similarly, the B-string and C-string voltages are:

$$\frac{1}{3}|V_{BC} - V_{AB}|_{RMS} \quad \text{and} \quad \frac{1}{3}|V_{CA} - V_{BC}|_{RMS} \qquad \textbf{(EQ 8.4)}$$

These quantities are what the bank phase overvoltage protection measures when the bus source is set for wye VTs, and the bank overvoltage protection ground setpoint is set to “Ungrd w/o Vn”.

In applications where the bus VTs are delta connected, the bus phase-to-ground voltages and therefore the bus zero sequence voltage are unknown. However, as shown immediately above, string voltages can be determined for an ungrounded balanced bank using only phase-to-phase bus voltages. In the case of a grounded bank, we can calculate that the A-string voltage is:

$$\begin{aligned} |V_A|_{RMS} &= \frac{1}{3}|3V_A + (V_B - V_B) + (V_C - V_C)|_{RMS} \\ &= \frac{1}{3}|V_A - V_B - V_C + V_A + (V_A + V_B + V_C)|_{RMS} \\ &= \frac{1}{3}|V_{AB} - V_{CA} + 3V_0|_{RMS} \end{aligned} \quad \text{(EQ 8.5)}$$

If we make the assumption that the zero-sequence voltage is negligible, which is reasonable when the system is normal (non-faulted), then the string voltages for grounded banks are the same as for the ungrounded balanced banks:

$$\frac{1}{3}|V_{AB} - V_{CA}|_{RMS},\ \frac{1}{3}|V_{BC} - V_{AB}|_{RMS},\ \text{or}\ \frac{1}{3}|V_{CA} - V_{BC}|_{RMS} \quad \text{(EQ 8.6)}$$

These quantities are what the bank phase overvoltage protection measures whenever the bus source is set for delta VTs.

8.1.3 VOLTAGE DIFFERENTIAL (ANSI 87V)

a) OPERATING PRINCIPLE

The voltage differential function is based on a voltage divider principle - a healthy capacitor string has a constant and known match factor between its full tap (typically the bus voltage) and an auxiliary tap used by the protection. Any single element failure will result in a difference between the measured factor and its value when the bank is healthy. The protection can be used on both grounded and ungrounded banks. For ungrounded banks, the neutral point voltage (V_X) must be measured by the relay, and used to derive the voltage across the string.

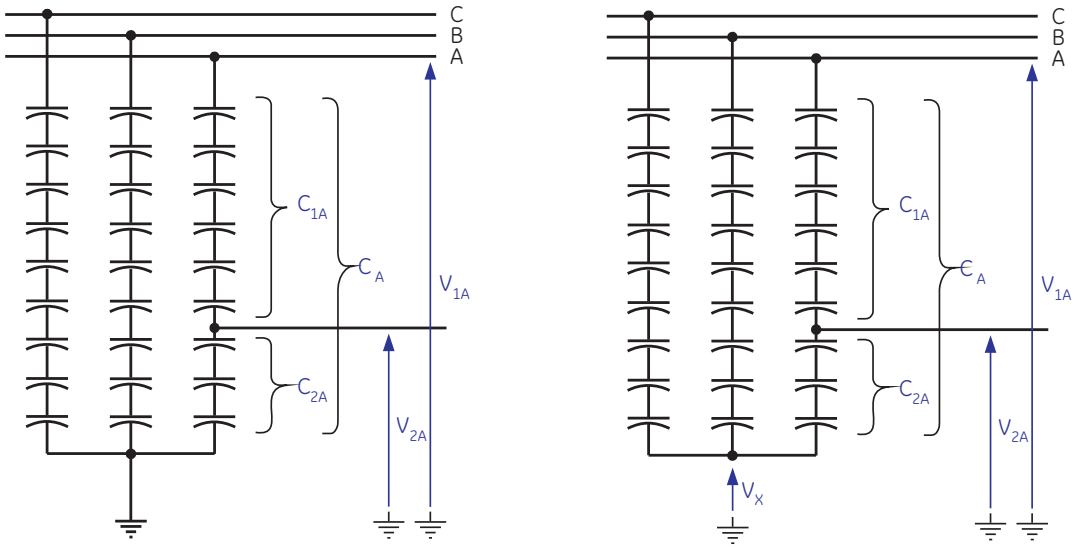

Figure 8–2: VOLTAGE DIFFERENTIAL APPLICATION TO GROUNDED AND UNGROUNDED BANKS

The voltage differential protection uses the following operating signal for grounded banks.

$$V_{OP(A)} = |V_{1A} - k_A V_{2A}| \quad \text{(EQ 8.7)}$$

The voltage differential protection uses the following operating signal for ungrounded banks.

$$V_{OP(A)} = |(V_{1A} - V_X) - k_A(V_{2A} - V_X)| \quad \text{(EQ 8.8)}$$

In the above equations, k_A is a match factor setting for the A-leg of the bank. The voltages are as defined in the figure above, and are in per-unit values on the nominal bus phase-to-ground voltage base. Equation 8.7 is implemented using primary voltage magnitudes, while equation 8.8 is implemented using primary voltage phasors. The protection operates when the operate signal is greater than the set pickup level for the set pickup delay.

Identical relations apply to phases B and C.

Sensitivity is the key performance parameter. The applied comparator uses a simple integration method in addition to the standard hysteresis approach, to deal with chattering of the operating signal at the boundary of operation.

b) BALANCED CASE

To understand how the voltage differential protection works, consider for simplicity the grounded bank operating equation below.

$$V_{OP(A)} = \left| V_{1A} - k_A V_{2A} \right| \quad \text{(EQ 8.9)}$$

The ungrounded case is similar except that all voltages have V_X subtracted. If the initial factory balanced A-leg string has an initial capacitance of C_A, divided into sub-strings with initial capacitances of C_{1A} and C_{2A}, and the bank is energized with system phase-to-ground voltage V_{Spg}, then the string will form a voltage divider and the initial measured voltages are:

$$V_{1A} = V_{Spg} \quad \text{(EQ 8.10)}$$

$$V_{2A} = V_{Spg} \times \frac{C_A}{C_{2A}} \quad \text{(EQ 8.11)}$$

Substituting these results into equation 8.9, the initial operating signal is:

$$\begin{aligned} V_{OP(A)} &= \left| V_{1A} - k_A V_{2A} \right| \\ &= \left| V_{Spg} - k_A V_{Spg} \times \frac{C_A}{C_{2A}} \right| \\ &= V_{Spg} \times \left| 1 - k_A \times \frac{C_A}{C_{2A}} \right| \end{aligned} \quad \text{(EQ 8.12)}$$

The match factor setting k_A is chosen as:

$$k_A = \frac{C_{2A}}{C_A} \quad \text{(EQ 8.13)}$$

Therefore, as can be seen from the previous two equations, the initial operating signal will be zero.

c) SENSITIVITY

Now consider the consequences of an element failure in the upper sub-string of leg A, making a small capacitance change in C_{1A}. The effect on the operating signal can be calculated by taking the derivative of equation 8.12 with respect to C_A, holding C_{2A} constant. In the general case, the derivative of the absolute value function is messy, but in our case where the initial value is zero, the derivative of the absolute function is simply the absolute value of the derivative of its argument. The derivative is thus:

$$\begin{aligned} \frac{d}{dC_A} V_{OP(1A)} &= V_{Spg} \times \left| \frac{d}{dC_A} \left(1 - k_A \frac{C_A}{C_{2A}} \right) \right| \\ &= V_{Spg} \times \left| -\frac{k_A}{C_{2A}} \right| \\ &= V_{Spg} \times \frac{k_A}{C_{2A}} \end{aligned} \quad \text{(EQ 8.14)}$$

Substituting equation 8.13, we have:

$$\frac{d}{dC_A} V_{OP(1A)} = V_{Spg} \times \frac{1}{C_A} \quad \text{or} \quad dV_{OP(1A)} = V_{Spg} \times \frac{dC_A}{C_A} \quad \text{(EQ 8.15)}$$

This can be written as:

$$V_{OP(1A)}(\text{pu}) = V_{Spg}(\text{pu}) \times \Delta C_A(\text{pu}) \quad \textbf{(EQ 8.16)}$$

In the above equation, ΔC_A(pu) is the capacitance change as a per-unit of the leg capacitance, V_{Spg} is the system phase-to-ground voltage, and $V_{OP(1A)}$(pu) is the operating signal resulting from the failure in the upper sub-string. Both voltages are in per-unit of nominal bus phase-to-ground voltage, so V_{Spg} can be taken as 1 when the system is normal (not faulted). Note however that under external fault conditions sensitivity may be much different from the non-fault sensitivity.

Instead of a failure in the upper sub-string, we now suppose a failure in the lower sub-string. The same approach is used, except to make the algebra easier, the initial operating signal is converted to be in terms of C_{1A} using:

$$C_A = \frac{C_{1A}C_{2A}}{C_{1A}+C_{2A}} \quad \text{or} \quad C_{2A} = \frac{C_A C_{1A}}{C_{1A}-C_A} \quad \textbf{(EQ 8.17)}$$

In this case, we have:

$$\begin{aligned} V_{OP(A)} &= V_{Spg} \times \left| 1 - k_A \times \frac{C_A}{C_{2A}} \right| \\ &= V_{Spg} \times \left| 1 - k_A \times \frac{C_{1A}-C_A}{C_{1A}} \right| \end{aligned} \quad \textbf{(EQ 8.18)}$$

The derivative is thus:

$$\begin{aligned} \frac{d}{dC_A} V_{OP(2A)} &= V_{Spg} \times \left| \frac{d}{dC_A} \left(1 - k_A \frac{C_{1A}-C_A}{C_{1A}} \right) \right| \\ &= V_{Spg} \times \left| \frac{k_A}{C_{1A}} \right| \\ &= V_{Spg} \times \frac{k_A}{C_{1A}} \end{aligned} \quad \textbf{(EQ 8.19)}$$

Substituting equation 8.17 into equation 8.13, we have:

$$k_A = \frac{C_{2A}}{C_A} = \frac{C_{1A}}{C_{1A}-C_A} \quad \text{or} \quad C_{1A} = k_A C_{1A} - k_A C_A \quad \textbf{(EQ 8.20)}$$

Therefore:

$$C_{1A} = \frac{k_A C_A}{k_A - 1} \quad \textbf{(EQ 8.21)}$$

Substituting this value into equation 8.19, we get:

$$\begin{aligned} \frac{d}{dC_A} V_{OP(2A)} &= V_{Spg} \times \frac{k_A}{C_{1A}} \\ &= V_{Spg} \times \frac{k_A - 1}{C_A} \end{aligned} \quad \textbf{(EQ 8.22)}$$

Or alternately,

$$dV_{OP(2A)} = V_{Spg} \times (k_A - 1) \times \frac{dC_A}{C_A} \quad \textbf{(EQ 8.23)}$$

The value can be expressed as:

$$V_{OP(2A)}(\text{pu}) = V_{Spg}(\text{pu}) \times (k_A - 1) \times \Delta C_A(\text{pu}) \quad \textbf{(EQ 8.24)}$$

In the above equation, ΔC_A(pu) is the capacitance change as a per-unit of the leg capacitance, V_{Spg} is the system phase-to-ground voltage, and $V_{OP(2A)}$(pu) is the operating signal resulting from the failure in the lower sub-string. Both voltages are in per-unit of nominal bus phase-to-ground voltage, so V_{Spg} can be taken as 1 when the system is normal (not faulted). Note however that under external fault conditions sensitivity may be much different from the non-fault sensitivity.

In practice, k_A is no less than 2.0 as the tap is no more than half way up the phase string. Comparing equation 8.16 with equation 8.24, it can be seen that $V_{OP(2A)}$(pu) ≥ $V_{OP(1A)}$(pu), and thus that an element failure in the lower substring produces a operating signal no smaller than the same failure in the upper sub-string. Thus $V_{OP(1A)}$(pu) represents the worse case sensitivity. A failure resulting in a 0.01 pu capacitance change in the leg capacitance results in an operating signal of at least 0.01 pu of bus phase-to-ground voltage.

d) AUTO-SETTING

While a capacitor bank may be designed to have a tap at say the mid-point or the one-third point, manufacturing tolerances result in the actual tap ratio being slightly different from the design target. To prevent a spurious component in the operating signal, the match factor settings must correspond to the actual rather than the design tap ratio. As a convenient alternative to manually determining the optimum match factor settings, the relay can automatically calculate these settings from its own measurements while the capacitor is in-service, as described in the Commands and Targets chapter. The C70 sets the operate signal to zero in equation 8.7 or 8.8 and solves for the match factor k_A using the average of several successive voltage measurements. This technique has the further advantage that it to a large degree compensates for instrumentation error. However, the assumption made here is that when the auto-set command is executed, the capacitor is in an acceptably balanced state, wherein the operating signal ought to be zero. Following the auto-set command, the protection will be measuring changes from the state that existed at the time the auto-set command executed.

8.1.4 COMPENSATED BANK NEUTRAL VOLTAGE UNBALANCE (ANSI 59NU)

a) OPERATING PRINCIPLE

The neutral voltage unbalance function is applicable to ungrounded banks. Fundamentally, this function responds to an overvoltage condition of the neutral-point voltage. If the capacitor bank and the power system voltages are balanced, the neutral-point voltage is zero. Should a capacitor element in the bank fail, the bank will become unbalanced and the neutral voltage will increase.

The operate signal for the neutral voltage unbalance protection is:

$$V_{OP} = \frac{1}{3}\left|V_X(1 + k_{AB} + k_{AC}) - 3V_0 + V_B(1 - k_{AB}) + V_C(1 - k_{AC})\right| \quad \textbf{(EQ 8.25)}$$

The restraint signal for the neutral voltage unbalance protection is:

$$V_{REST} = \left|V_X + V_0\right| \quad \textbf{(EQ 8.26)}$$

In the above equations, k_{AB} and k_{AC} represent capacitor bank unbalance ratio settings. The voltages are as defined by the figure below, and are expressed in per-units of the nominal value of the neutral-point VT.

These equations involve phasors, not magnitudes. That is, the vector sum of the voltages is created by the protection function implementing the method.

The neutral voltage unbalance protection operates when the operate signal is greater than the set pickup level and the operate signal is greater than the set percentage of the restraint signal, all for the set pickup delay.

Sensitivity is the key performance parameter. The applied comparator uses a simple integration method in addition to the standard hysteresis approach to deal with chattering of the operating signal at the boundary of operation. In addition a slope characteristic is used to deal with measuring errors for the involved voltages under large system unbalances such as during a close-in external fault.

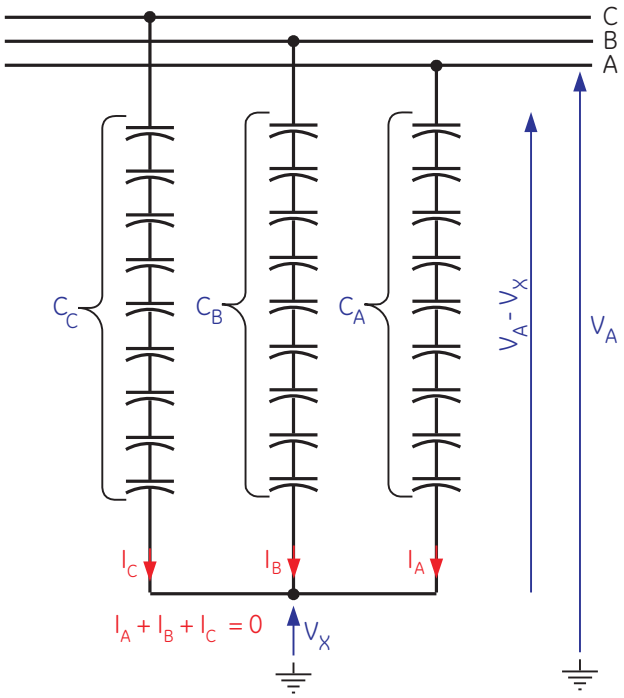

Figure 8–3: COMPENSATED BANK NEUTRAL OVERVOLTAGE APPLICATION

b) BALANCED CASE

To understand neutral voltage unbalance protection, we can start with Kirchhoff's current law for the neutral node of the bank:

$$I_A + I_B + I_C = j\omega C_A(V_A - V_X) + j\omega C_B(V_B - V_X) + j\omega C_C(V_C - V_X) = 0 \quad \textbf{(EQ 8.27)}$$

This expression can be rearranged as follows.

$$\begin{aligned} &- V_X(C_A + C_B + C_C) + V_A C_A + V_B C_B + V_C C_C = 0 \\ \Rightarrow &- V_X(C_A + C_B + C_C) + V_A C_A + V_B C_A + V_C C_A + V_B C_B - V_B C_A + V_C C_C - V_C C_A = 0 \\ \Rightarrow &- V_X(C_A + C_B + C_C) + C_A(V_A + V_B + V_C) + V_B(C_B - C_A) + V_C(C_C - C_A) = 0 \end{aligned} \quad \textbf{(EQ 8.28)}$$

Multiplying both sides by –1 / C_A and substituting the sum of the phase voltages with $3V_0$ yields:

$$V_X\left(1 + \frac{C_B + C_C}{C_A}\right) - 3V_0 + V_B\left(1 - \frac{C_B}{C_A}\right) + V_C\left(1 - \frac{C_C}{C_A}\right) = 0 \quad \textbf{(EQ 8.29)}$$

As the left hand side of this equation is equal to zero, we can subtract it from the expression inside the absolute value brackets in equation 8.25 to get:

$$\begin{aligned} V_{OP} &= \frac{1}{3}\left|V_X(1 + k_{AB} + k_{AC}) - 3V_0 + V_B(1 - k_{AB}) + V_C(1 - k_{AC}) - V_X\left(1 + \frac{C_B + C_C}{C_A}\right) + 3V_0 - V_B\left(1 - \frac{C_B}{C_A}\right) - V_C\left(1 - \frac{C_C}{C_A}\right)\right| \\ &= \frac{1}{3}\left|V_X\left(k_{AB} - \frac{C_B}{C_A} + k_{AC} - \frac{C_C}{C_A}\right) + V_B\left(\frac{C_B}{C_A} - k_{AB}\right) + V_C\left(\frac{C_C}{C_A} - k_{AC}\right)\right| \end{aligned} \quad \textbf{(EQ 8.30)}$$

The unbalance ratio *k*-values that reflect the initial or inherent bank unbalance are chosen as:

$$k_{AB} = \frac{C_B}{C_A}, \quad k_{AC} = \frac{C_C}{C_A} \quad \textbf{(EQ 8.31)}$$

Therefore, as seen from the previous two equations, the initial operating signal will be zero.

Note that the ratios of the capacitances between phase A and the two other phases are close to unity, and therefore the correcting factors in equation 8.25 for the B and C-phase voltages are small numbers, while the factor for the V_X voltage is close to 3. If so, equation 8.25 takes a familiar simplified form:

$$V_{OP} = |V_X - V_0| \quad \text{(EQ 8.32)}$$

The V_0 term in the operate equation can be either the neutral component in the bus voltages (one-third of the vectorial sum of the phase voltages calculated by the relay), or directly measured neutral voltage component (open-corner-delta VT voltage).

c) SENSITIVITY

Now consider the consequences of a capacitor element failure in one leg, most conveniently leg C, making a small capacitance change in leg-C capacitance. The effect on the operating signal can be calculated by taking the derivative of equation 8.25 with respect to C_C. In the general case, the derivative of the absolute value function is messy, but in our case where the initial value is zero, the derivative of the absolute function is simply the absolute value of the derivative of its argument. As such, the derivative is:

$$\begin{aligned} \frac{\mathrm{d}}{\mathrm{d}C_C} V_{OP} &= \frac{1}{3}\frac{d}{dC_C}\left|(V_X(1 + k_{AB} + k_{AC}) - 3V_0 + V_B(1 - k_{AB}) + V_C(1 - k_{AC}))\right| \\ &= \frac{1}{3}\left|(1 + k_{AB} + k_{AC})\frac{dV_X}{dC_C}\right| \end{aligned} \quad \text{(EQ 8.33)}$$

Recall equation 8.29.

$$V_X\left(1 + \frac{C_B + C_C}{C_A}\right) - 3V_0 + V_B\left(1 - \frac{C_B}{C_A}\right) + V_C\left(1 - \frac{C_C}{C_A}\right) = 0 \quad \text{(EQ 8.34)}$$

Differentiating this gives:

$$\begin{aligned} &\frac{dV_X}{dC_C}\left(1 + \frac{C_B + C_C}{C_A}\right) + V_X\left(\frac{1}{C_A}\right) - V_C\left(\frac{1}{C_A}\right) = 0 \\ &\Rightarrow \frac{d}{dC_C}V_X = -\frac{V_X - V_C}{C_A\left(1 + \frac{C_B + C_C}{C_A}\right)} \\ &\Rightarrow \frac{d}{dC_C}V_X = -\frac{V_X - V_C}{C_A(1 + k_{AB} + k_{AC})} \end{aligned} \quad \text{(EQ 8.35)}$$

Substituting for V_X from equation 8.34 gives:

$$\frac{d}{dC_C}V_X = \frac{3V_0 - V_B(1 - k_{AB}) - V_C(2 + k_{AB})}{C_A(1 + k_{AB} + k_{AC})^2} \quad \text{(EQ 8.36)}$$

This can be substituted into equation 8.33 to obtain:

$$\begin{aligned} \frac{d}{dC_C}V_{OP} &= \frac{1}{3}\left|(1 + k_{AB} + k_{AC})\frac{dV_X}{dC_C}\right| \\ &= \frac{1}{3}\left|\frac{3V_0 - V_B(1 - k_{AB}) - V_C(2 + k_{AB})}{C_A(1 + k_{AB} + k_{AC})}\right| \end{aligned} \quad \text{(EQ 8.37)}$$

For our purposes, $C_A \cong C_B \cong C_C$, so $k_{AB} \cong 1$ and $k_{AC} \cong 1$. This results in:

$$\begin{aligned} \frac{d}{dC_C}V_{OP} &\cong \frac{1}{3}\left|\frac{V_C - V_0}{C_C}\right| \\ &= \frac{1}{3} \times \frac{1}{C_C} \times |V_C - V_0| \end{aligned} \quad \text{(EQ 8.38)}$$

Under normal system conditions (non-fault), $V_C >> V_0$, and V_C is the system phase-to-ground voltage. The system voltage V_{Spg}, which by convention is on the bus voltage base, converted to the base of nominal value of the neutral-point VT used in these equations, is:

$$\frac{n_{\text{bus\_phs}}}{n_{\text{ntrl\_aux}}} \times V_{Spg} \quad \textbf{(EQ 8.39)}$$

This gives:

$$\frac{d}{dC_C} V_{OP} \cong \frac{1}{3} \times \frac{1}{C_C} \times \frac{n_{\text{bus\_phs}}}{n_{\text{ntrl\_aux}}} \times V_{Spg}$$
$$\Rightarrow dV_{OP} \cong \frac{1}{3} \times \frac{n_{\text{bus\_phs}}}{n_{\text{ntrl\_aux}}} \times V_{Spg} \times \frac{dC_C}{C_C} \quad \textbf{(EQ 8.40)}$$

This can be written as:

$$V_{OP}(\text{pu}) \cong \frac{1}{3} \times \frac{n_{\text{bus\_phs}}}{n_{\text{ntrl\_aux}}} \times V_{Spg} \times \Delta C(\text{pu}) \quad \textbf{(EQ 8.41)}$$

In the above equations, ΔC(pu) is the capacitance change as a per-unit of the leg capacitance, and V_{OP}(pu) is the operating signal resulting from the failure in per-unit of the nominal value of the neutral-point VT. V_{Spg} is the system phase-to-ground voltage in per-unit of the nominal system phase-to-ground voltage, so can be taken as 1 when the system is normal (not faulted). Note however that under external fault conditions sensitivity may be much different from the non-fault sensitivity. $n_{\text{bus\_phs}}$ and $n_{\text{ntrl\_aux}}$ are the VT ratios of the phase VT bank of the bus source and of the auxiliary VT channel of the neutral source, respectively.

Note that under external fault conditions sensitivity may be much different form the non-fault sensitivity. To prevent mis-operation, a restraint and/or coordinating time delay should be used.

d) RESTRAINT

Severe system voltage unbalance, such as can occur during near-by bolted ground faults, can exacerbate measurement error in V_X or V_0, resulting in spurious operating signal. In addition as discussed above the sensitivity can be affected. To prevent operation under these conditions, percent restraint supervision is provided using a restraint signal that is the magnitude of the vector sum of V_X and V_0, as defined below.

$$V_{REST} = |V_X + V_0| \quad \textbf{(EQ 8.42)}$$

During external ground faults, these two voltages are approximately in phase generating a large restraining signal being twice the zero-sequence voltage at the bus. A slope of few percent is typically sufficient to provide good security under large system unbalances.

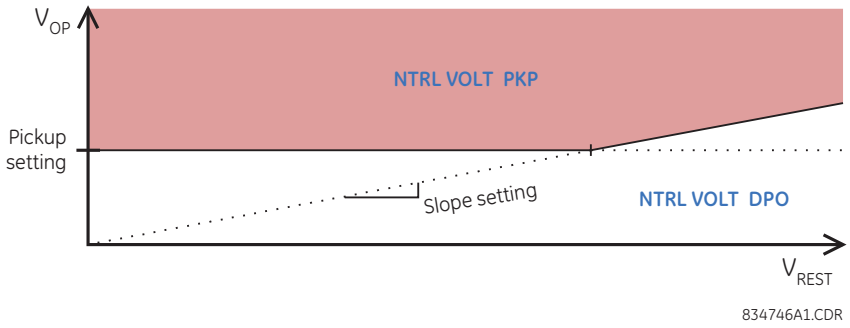

Figure 8–4: NEUTRAL OVERVOLTAGE RESTRAINT

e) AUTO-SETTING COMMAND

As a convenient alternative to manually determining the unbalance ratio settings, the relay can automatically calculate these settings from its own measurements while the capacitor is in-service, as described in the Commands and Targets chapter. The technique the relay uses is to set the operate signal variable in equation 8.25 to zero and solve for the unbalance ratio *k*-values using the average of several successive measurements of the voltages.

Determination of the two *k*-values using only one equation is possible as the *k*-values are known to be real-valued, so the complex-valued equation above can be separated into real and imaginary parts, with the same two *k*-values in each. A solution exists as long as the cross product of the B and C-phase voltages is non-zero; that is, the capacitor bank is in-service. However, the assumption made here is that when the auto-set command is executed, the capacitor is in an acceptably balanced state, wherein the operating signal ought to be zero. Following the auto-set command, the protection will be measuring changes from the state that existed at the time the auto-set command executed.

8.1.5 PHASE CURRENT UNBALANCE (ANSI 60P)

a) OPERATING PRINCIPLE

The phase current unbalance function is based on the balance between interconnected and nominally identical phase strings, and is applicable to both grounded and ungrounded installations. A window CT measuring the vectorial difference between the two phase currents is required for each phase as shown. While the two phase strings are actually identical, the measured current is be zero. The failure of an element in either string results in a difference current, which is sensed by the relay. However, with the two strings slightly mismatched due to manufacturing tolerances, an inherent difference current may be present. Compensation for this inherent unbalance current is available to increase the sensitivity of the function.

The phase current unbalance function uses the following operate signal.

$$I_{OP(A)} = \left| I_{DIF(A)} - k_A I_A \right| \quad \textbf{(EQ 8.43)}$$

In this equation, k_A is the capacitor bank leg-A inherent unbalance factor setting. The currents are as defined in the figure below, and are in per-unit on the nominal current of the differential source. This equation involve phasors, not magnitudes; that is, the vector sum of the currents is created by the protection function implementing the method.

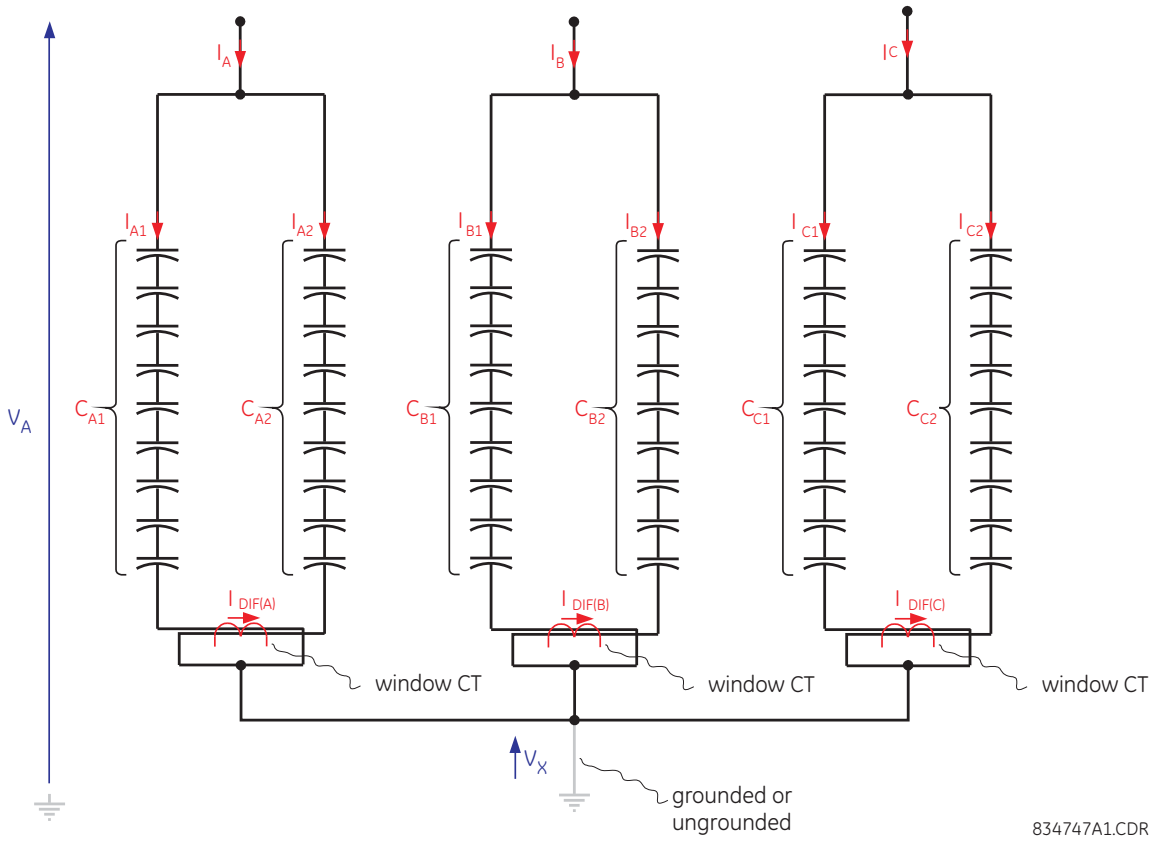

Figure 8–5: PHASE CURRENT UNBALANCE APPLICATION

The protection operates when the operate signal is greater than the set pickup level for the set pickup delay. Identical relations apply to phases B and C.

Sensitivity is the key performance parameter. The applied comparator uses a simple integration method in addition to the standard hysteresis approach, to deal with chattering of the operating signal at the boundary of operation.

b) BALANCED CASE

To understand phase current unbalance protection, first note that the currents are driven by the individual admittances in each string:

$$I_{A1} = \frac{j\omega C_{A1}(V_A - V_X)}{I_{base}}; \quad I_{A2} = \frac{j\omega C_{A2}(V_A - V_X)}{I_{base}} \qquad \text{(EQ 8.44)}$$

In the above equations, I_{base} represents the differential CT primary current rating. This places the string currents on the same per-unit base used by the C70. Voltages are expressed in primary volts, capacitances in Farads, and frequency in radians per second.

The differential current is the vector difference between the two currents:

$$I_{DIF(A)} = I_{A1} - I_{A2} = \frac{j\omega(V_A - V_X)(C_{A1} - C_{A2})}{I_{base}} \qquad \text{(EQ 8.45)}$$

The total phase current is the vector sum of the two currents:

$$I_A = I_{A1} + I_{A2} = \frac{j\omega(V_A - V_X)(C_{A1} + C_{A2})}{I_{base}} \quad \text{(EQ 8.46)}$$

Inserting equation 8.46 into equation 8.45, to eliminate the voltages, we get:

$$I_{DIF(A)} = I_A \times \frac{C_{A1} - C_{A2}}{C_{A1} + C_{A2}} \quad \text{(EQ 8.47)}$$

Inserting this value into equation 8.43, we have:

$$I_{OP(A)} = \left| I_{DIF(A)} - k_A I_A \right| = \left| I_A \times \frac{C_{A1} - C_{A2}}{C_{A1} + C_{A2}} - k_A I_A \right| \quad \text{(EQ 8.48)}$$

The capacitor bank leg-A inherent unbalance factor setting k_A is chosen to be:

$$k_A = \frac{C_{A1} - C_{A2}}{C_{A1} + C_{A2}} \quad \text{(EQ 8.49)}$$

As can be seen from the previous two equations, the initial operating signal will be zero.

c) SENSITIVITY

Now consider the consequences of an element failure in a typical string, say string A1, making a small capacitance change in C_{A1} capacitance. The effect on the operating signal can be calculated by taking the derivative of equation 8.48 with respect to C_{A1}.

In the general case, the derivative of the absolute value function is messy, but in our case where the initial value is zero, the derivative of the absolute function is simply the absolute value of the derivative of its argument. We assume here that I_A is constant, which investigation has shown results in negligible error. The derivative is thus:

$$\begin{aligned} \frac{d}{dC_{A1}} I_{OP(A)} &= \left| \frac{d}{dC_{A1}} \left(I_A \times \frac{C_{A1} - C_{A2}}{C_{A1} + C_{A2}} - k_A I_A \right) \right| \\ &= \left| I_A \times \frac{(C_{A1} + C_{A2}) - (C_{A1} - C_{A2})}{(C_{A1} + C_{A2})^2} \right| \\ &= |I_A| \times \frac{2C_{A2}}{(C_{A1} + C_{A2})^2} \\ &\cong \frac{I_A}{2} \times \frac{1}{C_{A1}} \end{aligned} \quad \text{(EQ 8.50)}$$

The last step assumes $C_{A1} \cong C_{A2}$, and replaces the phase current vector with its magnitude. This can be written as:

$$\mathrm{d}I_{OP(A)} = \frac{I_A}{2} \times \frac{\mathrm{d}C_{A1}}{C_{A1}} \quad \text{(EQ 8.51)}$$

Alternatively, we can say:

$$I_{OP(A)}(\mathrm{pu}) = \frac{I_A}{2} \times \Delta C(\mathrm{pu}) \quad \text{(EQ 8.52)}$$

In the above equation, $\Delta C(\mathrm{pu})$ represents the capacitance change as a per-unit of the string capacitance, and $I_{OP(A)}(\mathrm{pu})$ represents the operating signal resulting from the failure in per-unit of the nominal current of the differential source. I_A is phase A terminal current on the same base. When the system is normal (no fault), I_A may be taken as the capacitor bank rated primary per-phase current I_{rated} converted to the differential source base. For example, $I_A = I_{rated} / I_{base}$, where I_{base} is again the differential CT primary current rating, or:

$$I_{OP(A)}(\mathrm{pu}) = \frac{I_{rated}}{2I_{base}} \times \Delta C(\mathrm{pu}) \quad \text{(EQ 8.53)}$$

Note that under external fault conditions, sensitivity may be much different from the non-fault sensitivity.

d) AUTO-SETTING

As a convenient alternative to manually determining inherent unbalance factor settings, the relay can automatically calculate these settings from its own measurements while the capacitor is in-service, as described in the Commands section of this manual. The technique the relay uses is to set the operate signal variable to zero in equation 8.43 and solve for the inherent unbalance factor k_A using the average of several successive measurements of the currents. However, the assumption made here is that when the auto-set command is executed, the capacitor is in an acceptably balanced state, wherein the operating signal ought to be zero. Following the auto-set command, the protection will be measuring changes from the state that existed at the time the auto-set command executed.

8.1.6 NEUTRAL CURRENT UNBALANCE (ANSI 60N)

a) OPERATING PRINCIPLE

The neutral current unbalance function is based on the balance between interconnected neutral currents of two parallel banks, and is applicable to both grounded and ungrounded installations. This text deals first with grounded applications, with a section at the end that discusses the differences with ungrounded applications. A window CT measuring the vector difference between the two neutral currents is required for grounded-wye configurations.

If the two banks were identical, the inter-neutral current would be zero. The failure of an element in either bank would then result in inter-neutral current, which is sensed by the relay. However, with the two banks slightly mis-matched due to manufacturing tolerances, a circulating zero-sequence current may be present. Compensation for this inherent unbalance current is available to increase the sensitivity of the function.

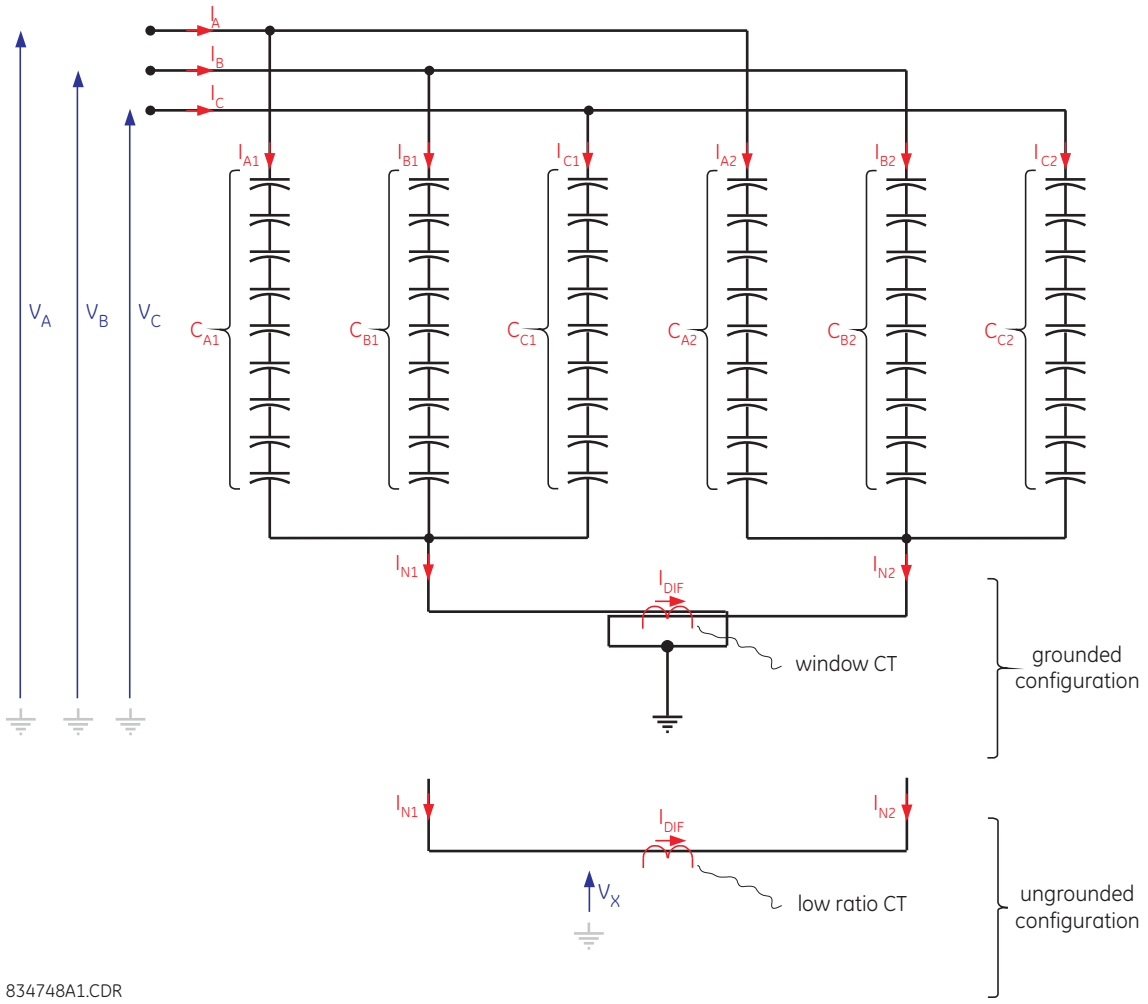

Figure 8–6: NEUTRAL CURRENT UNBALANCE APPLICATION

The neutral current unbalance protection uses the following operate signal.

$$I_{OP} = \left| I_{DIF} - k_1 I_1 - k_1^* I_2 \right| \quad \textbf{(EQ 8.54)}$$

The neutral current unbalance protection uses the following restraint signal.

$$I_{REST} = \left| I_0 \right| \quad \textbf{(EQ 8.55)}$$

In the above equations, k_1 represents the vector capacitor bank positive sequence inherent unbalance factor setting, and k_1* represents the complex conjugate of k_1. The currents are as defined in the figure above, and are in per-unit values of the nominal current of the bank source ground current channel.

These equations involve phasors, not magnitudes; that is, the vector sum of the currents is created by the protection function implementing the method. The protection operates when the operate signal is greater than the set pickup level for the set pickup delay.

Sensitivity is the key performance parameter. The applied comparator uses a simple integration method in addition to the standard hysteresis approach, to deal with chattering of the operating signal at the boundary of operation.

b) BALANCED CASE

The currents in the neutral current unbalance protection are driven by the individual admittances in each string:

$$I_{A1} = \frac{V_A \times j\omega C_{A1}}{I_{base}}; \quad I_{A2} = \frac{V_A \times j\omega C_{A2}}{I_{base}}$$
$$I_{B1} = \frac{V_B \times j\omega C_{B1}}{I_{base}}; \quad I_{B2} = \frac{V_B \times j\omega C_{B2}}{I_{base}} \qquad \text{(EQ 8.56)}$$
$$I_{C1} = \frac{V_C \times j\omega C_{C1}}{I_{base}}; \quad I_{C2} = \frac{V_C \times j\omega C_{C2}}{I_{base}}$$

In the above equations, I_{base} represents the differential CT primary current rating, inserted here to put the string currents on the same per-unit base used by the relay. Voltages are in primary volts, capacitances in Farads, and frequency in radians per second.

The two neutral currents can be derived from the above equations:

$$I_{N1} = I_{A1} + I_{B1} + I_{C1} = \frac{j\omega C_{A1} V_A + j\omega C_{B1} V_B + j\omega C_{C1} V_C}{I_{base}}$$
$$I_{N2} = I_{A2} + I_{B2} + I_{C2} = \frac{j\omega C_{A2} V_A + j\omega C_{B2} V_B + j\omega C_{C2} V_C}{I_{base}} \qquad \text{(EQ 8.57)}$$

The differential current is the vector difference between the two currents. By subtracting I_{N2} from I_{N1}, one obtains:

$$I_{DIF} = I_{N1} - I_{N2}$$
$$= \frac{j\omega[V_A(C_{A1} - C_{A2}) + V_B(C_{B1} - C_{B2}) + V_C(C_{C1} - C_{C2})]}{I_{base}} \qquad \text{(EQ 8.58)}$$

At the same time the total currents in each phase are driven by the total admittance of the two banks in each phase:

$$I_A = I_{A1} + I_{A2} = \frac{j\omega V_A(C_{A1} + C_{A2})}{I_{base}}$$
$$I_B = I_{B1} + I_{B2} = \frac{j\omega V_B(C_{B1} + C_{B2})}{I_{base}} \qquad \text{(EQ 8.59)}$$
$$I_C = I_{C1} + I_{C2} = \frac{j\omega V_C(C_{C1} + C_{C2})}{I_{base}}$$

Inserting the equations above into equation 8.58 so as to eliminate the voltages:

$$I_{DIF} = \frac{j\omega[V_A(C_{A1} - C_{A2}) + V_B(C_{B1} - C_{B2}) + V_C(C_{C1} - C_{C2})]}{I_{base}}$$
$$= I_A \times \frac{C_{A1} - C_{A2}}{C_{A1} + C_{A2}} + I_B \times \frac{C_{B1} - C_{B2}}{C_{B1} + C_{B2}} + I_C \times \frac{C_{C1} - C_{C2}}{C_{C1} + C_{C2}} \qquad \text{(EQ 8.60)}$$

Label k_A, k_B, and k_C as follows:

$$k_A = \frac{C_{A1} - C_{A2}}{C_{A1} + C_{A2}}, \quad k_B = \frac{C_{B1} - C_{B2}}{C_{B1} + C_{B2}}, \quad k_C = \frac{C_{C1} - C_{C2}}{C_{C1} + C_{C2}} \qquad \text{(EQ 8.61)}$$

Also, convert from phase coordinates into sequence components as follows, and equation 8.60 becomes:

$$I_{DIF} = k_A(I_1 + I_2 + I_0) + k_B(\hat{a}^2 I_1 + \hat{a} I_2 + I_0) + k_C(\hat{a} I_1 + \hat{a}^2 I_2 + I_0)$$
$$= I_1(k_A + \hat{a}^2 k_B + \hat{a} k_C) + I_2(k_A + \hat{a} k_B + \hat{a}^2 k_C) + I_0(k_A + k_B + k_C) \qquad \text{(EQ 8.62)}$$

Substituting this into equation 8.54, we get:

$$\begin{aligned} I_{OP} &= \left| I_{DIF} - (k_1 I_1 - k_1^* I_2) \right| \\ &= \left| I_1(k_A + \hat{a}^2 k_B + \hat{a} k_C) + I_2(k_A + \hat{a} k_B + \hat{a}^2 k_C) + I_0(k_A + k_B + k_C) - k_1 I_1 - k_1^* I_2 \right| \\ &= \left| I_1(k_A + \hat{a}^2 k_B + \hat{a} k_C - k_1) + I_2(k_A + \hat{a} k_B + \hat{a}^2 k_C - k_1^*) + I_0(k_A + k_B + k_C) \right| \\ &= \left| I_1(k_A + \hat{a}^2 k_B + \hat{a} k_C - k_1) + I_2(k_A + \hat{a}^2 k_B + \hat{a} k_C - k_1)^* + I_0(k_A + k_B + k_C) \right| \end{aligned} \quad \text{(EQ 8.63)}$$

The capacitor bank positive sequence inherent unbalance factor setting k_1 is chosen to be:

$$\begin{aligned} k_1 &= k_A + \hat{a}^2 k_B + \hat{a} k_C \\ &= \frac{C_{A1} - C_{A2}}{C_{A1} + C_{A2}} + \hat{a}^2 \frac{C_{B1} - C_{B2}}{C_{B1} + C_{B2}} + \hat{a} \frac{C_{C1} - C_{C2}}{C_{C1} + C_{C2}} \end{aligned} \quad \text{(EQ 8.64)}$$

This allows the first and second terms in the I_{OP} equation above to vanish. The last term, being the product of two small numbers, virtually vanishes as well. Under normal system conditions (non-fault), the zero-sequence voltage and thus the zero-sequence current is small. The k_A, k_B, and k_C value involve the difference between two capacitances that are factory matched, and so are also small. In addition, it is very likely that they will be of varying signs, and thus their sum will be doubly small. Thus the initial operating signal under normal operating conditions is seen to be virtually zero.

c) SENSITIVITY

Now consider the consequences of an element failure in a typical string, say string A1, making a small capacitance change in the C_{A1} capacitance. The effect on the operating signal can be calculated by taking the derivative of equation 8.63 with respect to C_{A1}.

In the general case, the derivative of the absolute value function is messy, but in our case where the initial value is zero, the derivative of the absolute function is simply the absolute value of the derivative of its argument. We assume here that the currents remain constant, which investigation has shown results in negligible error. The derivative is thus:

$$\begin{aligned} \frac{d}{dC_{A1}} I_{OP} &= \left| \frac{d}{dC_{A1}} (I_1(k_A + \hat{a}^2 k_B + \hat{a} k_C - k_1) + I_2(k_A + \hat{a}^2 k_B + \hat{a} k_C - k_1)^* + I_0(k_A + k_B + k_C)) \right| \\ &= \left| \frac{dk_A}{dC_{A1}} I_1 + \frac{dk_A}{dC_{A1}} I_2 + \frac{dk_A}{dC_{A1}} I_0 \right| \\ &= \left| \frac{dk_A}{dC_{A1}} I_A \right| \\ &= \left| \frac{(C_{A1} + C_{A2}) - (C_{A1} - C_{A2})}{(C_{A1} + C_{A2})^2} I_A \right| \\ &= \frac{2 C_{A2} I_A}{(C_{A1} + C_{A2})^2} \\ &\cong \frac{I_A}{2} \times \frac{1}{C_{A1}} \end{aligned} \quad \text{(EQ 8.65)}$$

The final step assumes $C_{A1} \cong C_{A2}$, and replaces the phase current vector with its magnitude. This can be written as:

$$dI_{OP} = \frac{I_A}{2} \times \frac{dC_{A1}}{C_{A1}} \quad \text{(EQ 8.66)}$$

Alternately, we can say:

$$I_{OP}(\text{pu}) = \frac{I_A}{2} \times \Delta C(\text{pu}) \quad \text{(EQ 8.67)}$$

where ΔC(pu) represents the capacitance change as a per-unit value of the string capacitance, and I_{OP}(pu) represents the operating signal resulting from the failure in per-unit of the nominal current of the differential source. I_A represents the phase A terminal current on the same base. When the system is normal (no fault), I_A may be taken as the capacitor bank's rated primary per-phase current I_{rated} converted to the differential source base. For example, $I_A = I_{rated} / I_{base}$, where I_{base} is again the differential CT primary current rating, or with system normal:

$$I_{OP}(\text{pu}) = \frac{I_{rated}}{2I_{base}} \times \Delta C(\text{pu}) \quad \textbf{(EQ 8.68)}$$

Note that under external fault conditions, sensitivity may be much different from the non-fault sensitivity.

d) RESTRAINT

Severe system voltage unbalance, such as can occur during near-by bolted ground faults, can exacerbate measurement error, resulting in spurious operating signal. To prevent operation under these conditions, percent restraint supervision is applied using a restraint signal that is the magnitude of the zero-sequence current.

Typically few percent of slope is enough to ensure security of the function. The factor compensating for the inherent bank unbalance zeroes out the operating signal under relatively balanced bank currents. If the said currents contain a significant zero sequence component, the quality of compensation is lower, hence the need for the restraint, and this slope setting.

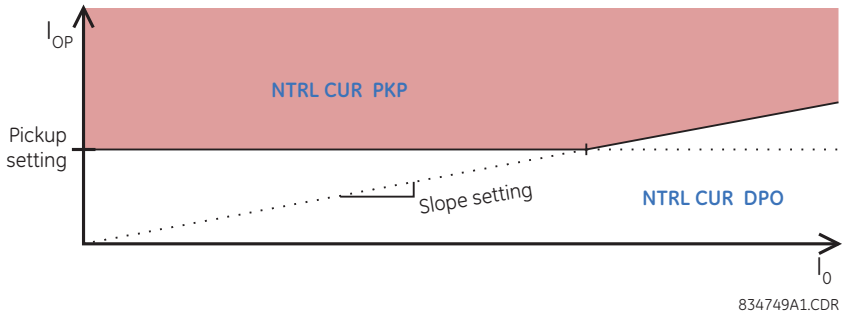

Figure 8–7: NEUTRAL CURRENT UNBALANCE RESTRAINT

e) AUTO-SETTING

As a convenient alternative to manually determining the unbalance *k*-factor settings, the relay can automatically calculate these settings from its own measurements while the capacitor is in-service, as described in the Commands and Targets chapter. The technique the relay uses is to set the operate signal variable to zero in equation 8.54 and solve for the unbalance factor k_1 using the average of several successive measurements of the currents.

However, the assumption made here is that when the auto-set command is executed, the capacitor is in an acceptably balanced state, wherein the operating signal ought to be zero. Following the auto-set command, the protection will be measuring changes from the state that existed at the time the auto-set command executed.

f) APPLICATION TO UNGROUNDED CAPACITOR BANKS

The forgoing discussion of the neutral current balance protection applied to the ground configuration. When applied to ungrounded configurations, all of the above applies, with the following exceptions:

- The phase voltages in equations 8.54 through 8.59 must have the neutral voltage V_X subtracted. However, as these voltages are eventually eliminated from the calculations, the outcome is unaffected.
- A low ratio CT can be used for ungrounded-wye configurations in place of a window type CT as there is no requirement to form the difference of the primary neutral currents.
- Whereas with the grounded configuration $I_{DIF} = I_{N1} - I_{N2}$, with the ungrounded configuration $I_{DIF} = I_{N1} = -I_{N2}$. This results in the $-C_{A2}$, $-C_{B2}$, and $-C_{C2}$ terms disappearing from equations 8.58 through 8.65. This results in the following changes.

  Equation 8.64 becomes:

$$k_1 = k_A + \hat{a}^2 k_B + \hat{a} k_C = \frac{C_{A1}}{C_{A1} + C_{A2}} + \hat{a}^2 \frac{C_{B1}}{C_{B1} + C_{B2}} + \hat{a} \frac{C_{C1}}{C_{C1} + C_{C2}} \quad \textbf{(EQ 8.69)}$$

  Equation 8.65 becomes:

$$\frac{d}{dC_{A1}} I_{OP} = \left| \frac{(C_{A1} + C_{A2}) - C_{A1}}{(C_{A1} + C_{A2})^2} I_A \right|$$
$$= \frac{C_{A2} I_A}{(C_{A1} + C_{A2})^2} \quad \text{(EQ 8.70)}$$
$$\cong \frac{I_A}{4} \times \frac{1}{C_{A1}}$$

Equation 8.67 becomes:

$$I_{OP}(\text{pu}) = \frac{I_A}{4} \times \Delta C(\text{pu}) \quad \text{(EQ 8.71)}$$

Equation 8.68 becomes:

$$I_{OP}(\text{pu}) = \frac{I_{rated}}{4 I_{base}} \times \Delta C(\text{pu}) \quad \text{(EQ 8.72)}$$

Note that in the ungrounded case, the operating signal is half of that for the grounded case.

- With the grounded configuration, the two banks must be nominally identical. With the ungrounded configuration the two banks need not be the identical though each should be balanced. In this situation, the base for ΔC(pu) is the capacitance of the string which has the element failure, so the larger bank will have a lower sensitivity than the smaller bank.

9.1.1 OVERVIEW

The appropriate protection is dependent on the capacitor bank type, configuration, CTs and VTs location and connections. IEEE Standard C37.99-2000: Guide for Protection of Shunt Capacitor Banks specifies methods used for protecting different types of banks.

There are four types of arrangements and individual capacitors connections used to form a capacitor bank.

- Externally fused capacitors.
- Internally fused capacitors.
- Fuseless capacitors.
- Unfused capacitors.

These arrangements are described in the following sections.

9.1.2 EXTERNALLY FUSED CAPACITORS

An individual fuse, externally mounted between the capacitor unit and the capacitor bank fuse bus, protects each capacitor unit. The capacitor unit can be designed for a relatively high voltage since the external fuse is capable of interrupting a high-voltage fault. However, the kvar rating of the individual capacitor unit is usually smaller because a minimum number of parallel units are required to limit the voltage rise on remaining units and thus allow the bank to remain in service with a capacitor can out of service. A capacitor bank using fused capacitors is configured using one or more series groups of parallel-connected capacitor units per-phase, as shown below.

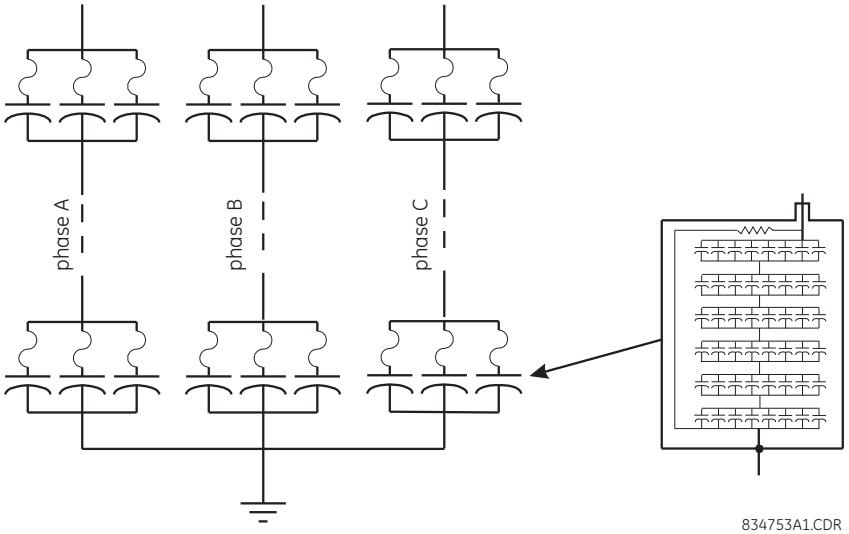

Figure 9–1: EXTERNALLY FUSED SHUNT CAPACITOR BANK AND CAPACITOR UNIT

9.1.3 INTERNALLY FUSED CAPACITORS

Each capacitor element is fused inside the capacitor unit. A *simplified fuse* is a piece of wire sized to melt under the fault current, and encapsulated in a wrapper able to withstand the heat produced by the arc during the current interruption. Upon the capacitor failure, the fuse removes the affected element only. The other elements, connected in parallel in the same group, remain in service but with a slightly higher voltage across them.

The following figure illustrates a typical capacitor bank utilizing internally fused capacitor units. In general, banks employing internally fused capacitor units are configured with fewer capacitor units in parallel, and more series groups of units than are used in banks employing externally fused capacitor units. The capacitor units are built larger because the entire unit is not expected to fail.

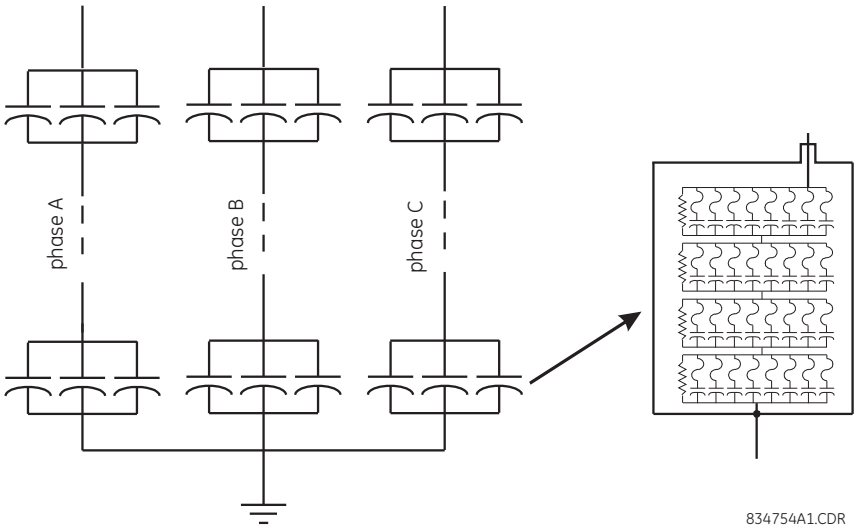

Figure 9–2: INTERNALLY FUSED SHUNT CAPACITOR BANK AND CAPACITOR UNIT

9.1.4 FUSELESS CAPACITORS

Fuseless capacitor bank are typically the most prevalent designs. The capacitor units for fuseless capacitor banks are connected in series strings between phase and neutral. The higher the bank voltage, the more capacitor elements in series.

The expected failure of the capacitor unit element is a short circuit, where the remaining capacitor elements will absorb the additional voltage. For example, if there are 6 capacitor units in series and each unit has 8 element groups in series there is a total of 48 element groups in the string. If one capacitor element fails, this element is shorted and the voltage across the remaining elements is 48 / 47 of the previous value, or about 2% higher. The capacitor bank remains in service; however, successive failures of elements would aggravate the problem and eventually lead to the removal of the bank.

The fuseless design is usually applied for applications at or above 34.5 kV where each string has more than ten elements in series to ensure the remaining elements do not exceed 110% rating if an element in the string shorts.

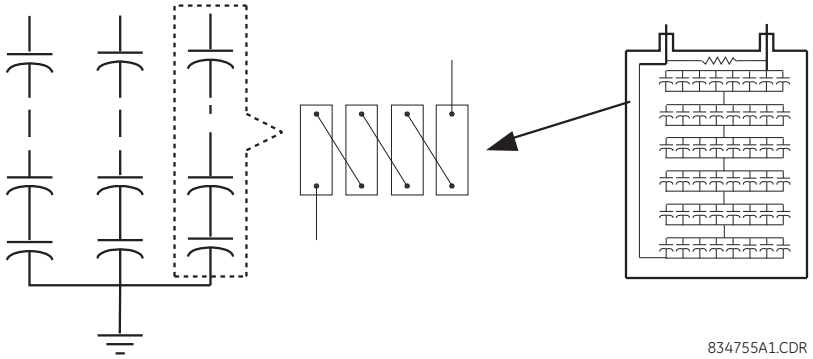

Figure 9–3: FUSELESS SHUNT CAPACITOR BANK AND SERIES STRING

9.1.5 UNFUSED CAPACITORS

Contrary to the fuseless configuration, where the units are connected in series, the unfused shunt capacitor bank uses a series or parallel connection of the capacitor units. The unfused approach would normally be used on banks below 34.5 kV, where series strings of capacitor units are not practical, or on higher voltage banks with modest parallel energy. This design does not require as many capacitor units in parallel as an externally fused bank.

9.2.1 GROUNDED WYE-CONNECTED BANKS

Grounded wye capacitor banks are composed of series and parallel-connected capacitor units per-phase and provide a low impedance path to ground. This offers some protection from surge overvoltages and transient overcurrents.

When a capacitor bank becomes too large, making the parallel energy of a series group too high for the capacitor units or fuses (greater than 4650 kvar), the bank may be split into two wye sections. The characteristics of the grounded double wye are similar to a grounded single wye bank. The two neutrals should be directly connected with a single path to ground.

The double-wye design facilitates better protection methods. Even with inherent unbalances the two banks will respond similarly to system events, and therefore, methods based on comparing one split-phase versus the other are more sensitive and less prone to system events (phase current balance technique, for example).

9.2.2 UNGROUNDED WYE-CONNECTED BANKS

Ungrounded wye banks do not permit zero sequence currents, third harmonic currents, or large capacitor discharge currents during system ground faults (phase-to-phase faults may still occur and will result in large discharge currents). Another advantage is that overvoltages appearing at the CT secondaries are not as high as in the case of grounded banks. However, the neutral should be insulated for full line voltage because it is momentarily at phase potential when the bank is switched or when one capacitor unit fails in a bank configured with a single group of units.

9.2.3 DELTA-CONNECTED BANKS

Delta-connected banks are generally used only at distribution voltages and are configured with a single series group of capacitors rated at line-to-line voltage. With only one series group of units, no overvoltage occurs across the remaining capacitor units from the isolation of a faulted capacitor unit.

9.2.4 H-CONFIGURATION

Some larger banks use an H-configuration in each phase with a current transformer connected between the two legs to compare the current down each leg. As long as all capacitors are balanced, no current will flow through the current transformer. If a capacitor fuse operates or an element shorts, some current will flow through the current transformer. This bridge connection facilitates very sensitive protection. The H-arrangement is used on large banks with many capacitor units in parallel.

9.2.5 TAPPED CONFIGURATION

Some larger banks use a tapped configuration in each phase with voltage transformers connected from the phase to ground and from the tap to ground. As long as no fuses have opened and no elements have shorted, the ratio of these two voltages will remain constant. The ratio changes with any capacitor failure in the phase, providing sensitive protection.

9.2.6 SUMMARY

The following figure summarizes the grounded wye, ungrounded wye, delta, H-bridge, and tapped connection types for capacitor banks.

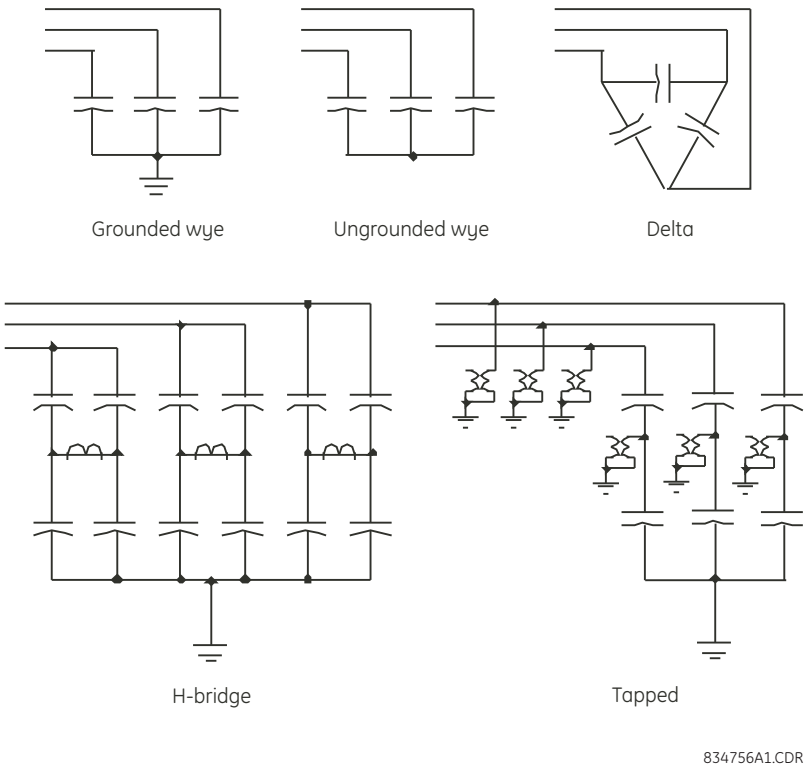

Figure 9–4: CAPACITOR BANK CONNECTIONS

9.3.1 DESCRIPTION

The protection of shunt capacitor banks involves both bank and system protection schemes.

Bank protection schemes are provided for faults within the capacitor bank itself. Bank protection may include items such as a means to disconnect a faulted capacitor unit or capacitor elements, a means to initiate a shutdown of the bank in case of faults that may lead to a catastrophic failure, and alarms to indicate unbalance within the bank.

System protection schemes are provided to protect the capacitor bank from stresses that may be caused by the system and to protect the substation and system from stresses that may be caused by the operation of the capacitor bank. System protection may include items such as a means to limit overvoltage and excessive transient overcurrents, and to disconnect the bank in the event of a major fault within the capacitor installation. System protection may also include alarms and methods to disconnect the entire shunt capacitor bank to prevent further damage to the capacitors due to abnormal system conditions.

In externally fused capacitor banks, several capacitor element breakdowns may occur before the fuse removes the entire unit. The external fuse will operate when a capacitor unit becomes (essentially) short circuited, isolating the faulted unit. Unbalance protection removes the bank from service when the resulting overvoltage becomes excessive on the remaining healthy capacitor units.

Internally fused capacitors have individual capacitor elements within a capacitor unit that are disconnected when an element breakdown occurs. The risk of successive faults is minimized because the fuse will isolate the faulty element within a few cycles. Unbalance protection removes the bank from service when the resulting unbalanced voltage becomes excessive on the remaining healthy capacitor elements or units.

For fuseless or unfused capacitor banks, a failed element is short-circuited by the weld that naturally occurs at the point of failure. Unbalance protection removes the bank from service when the resulting voltage becomes excessive on the remaining healthy capacitor elements or units.

9.3.2 CAPACITOR UNBALANCE PROTECTION

a) CONNECTIONS

Unbalance protection utilizes the unbalance that occurs in a normally balanced capacitor bank to detect an abnormality and initiate appropriate action. The most important function is to promptly remove the bank from service for any fault that may result in further damage. Capacitor unbalance protection is provided in many different ways, depending on the capacitor bank arrangement.

The variety of unbalance protection schemes that may be applied with C70 for internally fused, externally fused, fuseless, or unfused shunt capacitor banks is indicated in the Theory of Operation chapter and is illustrated on the figures below.

The following figure illustrates a single capacitor bank, ungrounded, with no tap available. In this case, a single CT/VT module is required.

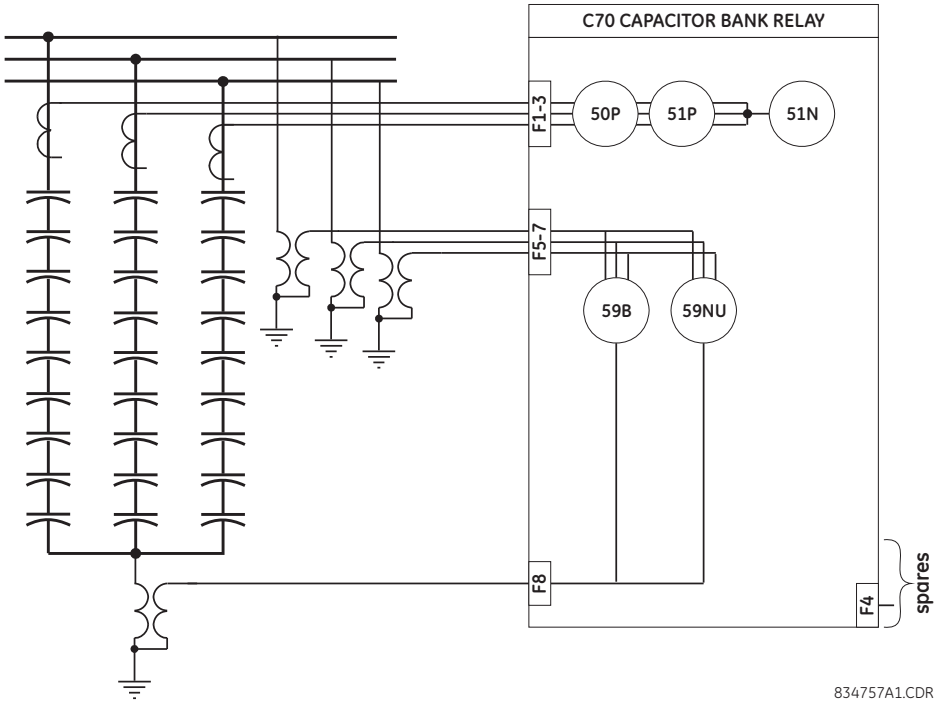

Figure 9–5: SINGLE BANK, UNGROUNDED, NO TAP AVAILABLE

The following figure illustrates a single capacitor bank, ungrounded, with a tap. In this case, two CT/VT modules are required.

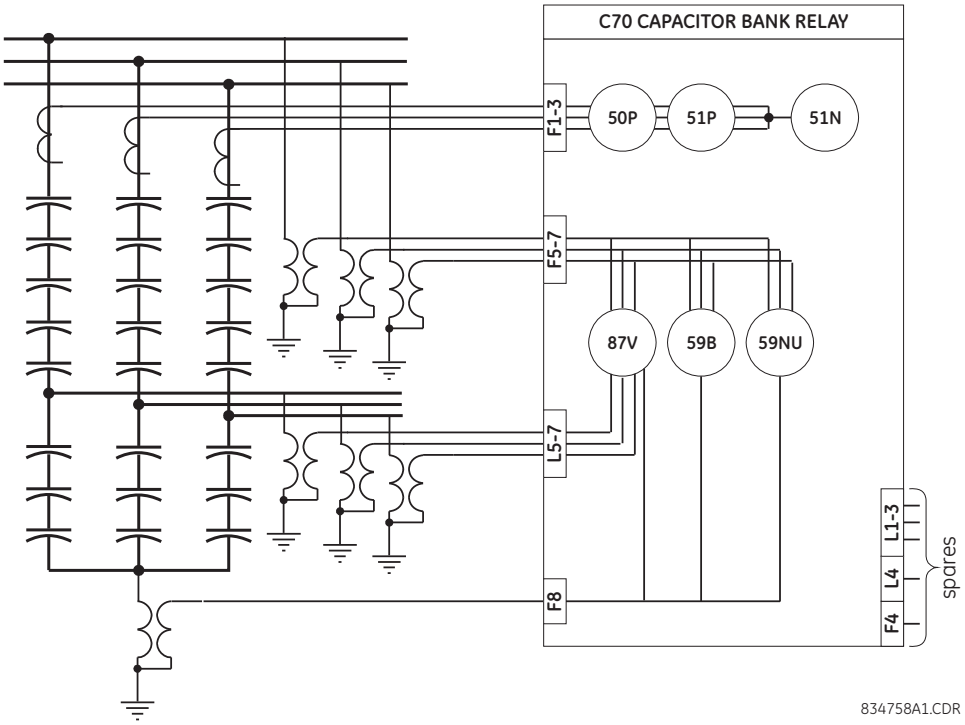

Figure 9–6: SINGLE BANK, UNGROUNDED, WITH A TAP

The following figure illustrates a single capacitor bank, grounded, with a tap. In this case, two CT/VT modules are required.

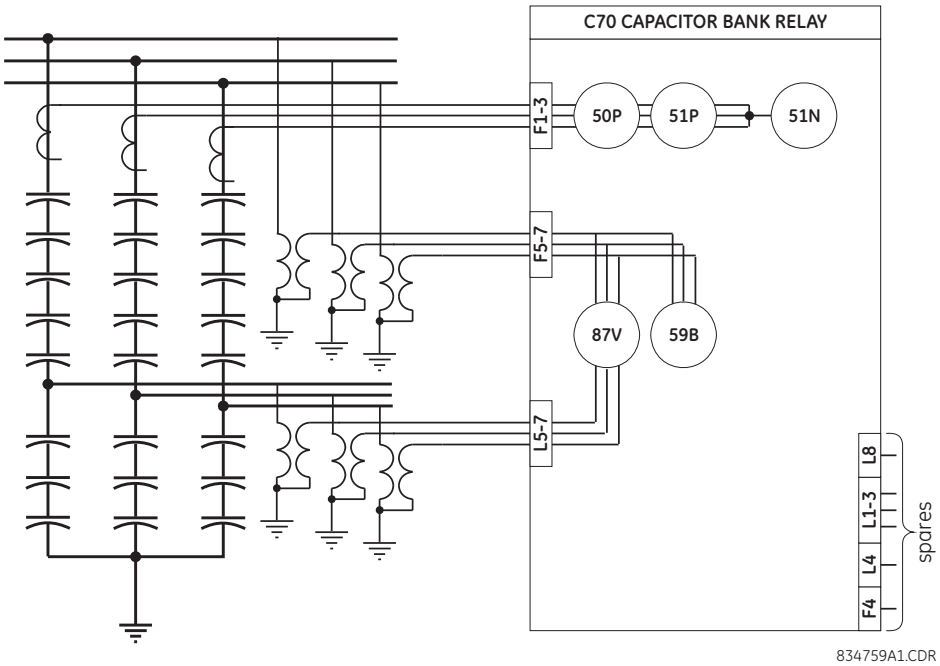

Figure 9–7: SINGLE BANK, GROUNDED, WITH A TAP

The following figure illustrates parallel capacitor banks, ungrounded, no tap available, and with current unbalance protection. In this case, two CT/VT modules are required.

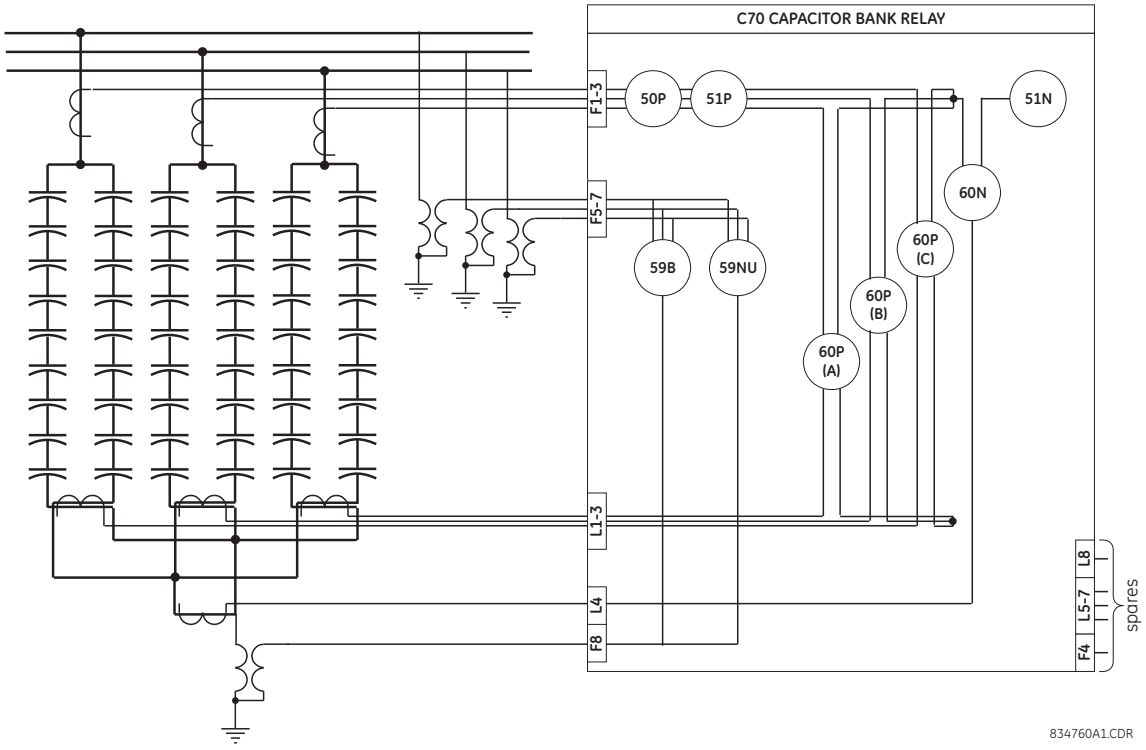

Figure 9–8: PARALLEL BANKS, UNGROUNDED, NO TAP AVAILABLE, CURRENT UNBALANCE PROTECTION

The following figure illustrates parallel capacitor banks, grounded, no tap available, and with current unbalance protection. In this case, two CT/VT modules are required.

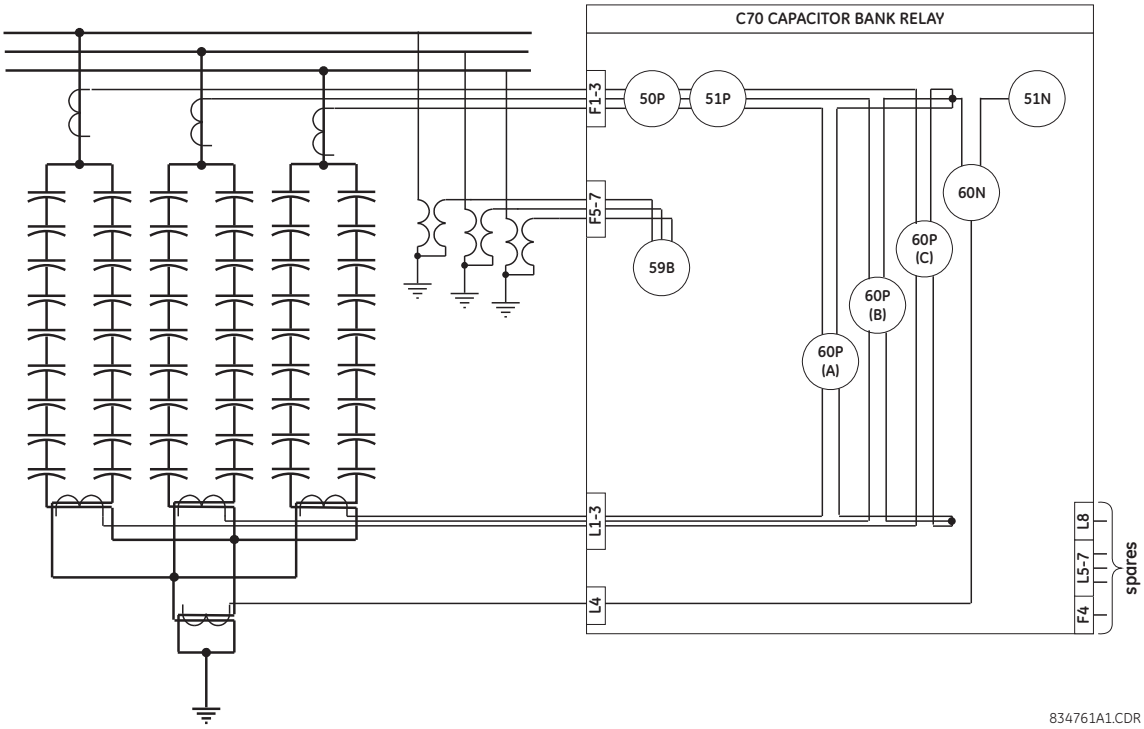

Figure 9–9: PARALLEL BANKS, GROUNDED, NO TAP AVAILABLE, CURRENT BALANCE PROTECTION

The following figure illustrates parallel capacitor banks, grounded, no tap available, with current unbalance protection and high-side CTs for each bank. In this case, two CT/VT modules are required.

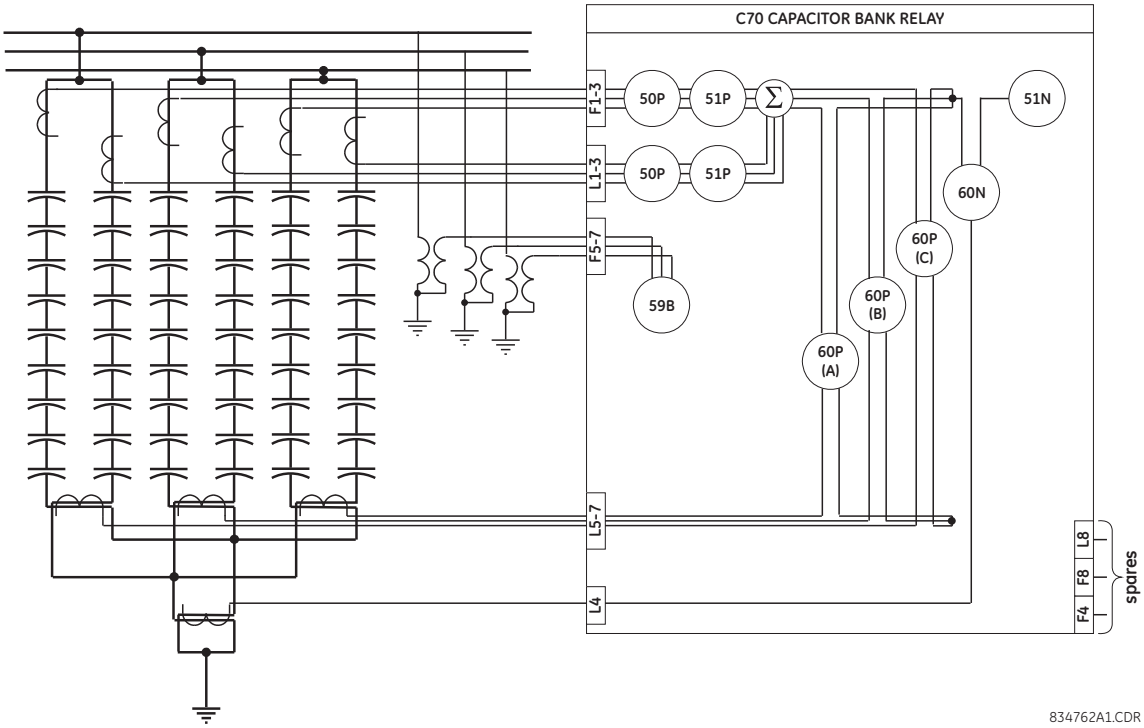

Figure 9–10: PARALLEL BANKS, GROUNDED, NO TAP, WITH CURRENT BALANCE PROTECTION AND HIGH-SIDE CTS

The following figure illustrates parallel capacitor banks, grounded, with taps and current unbalance protection. In this case, three CT/VT modules are required.

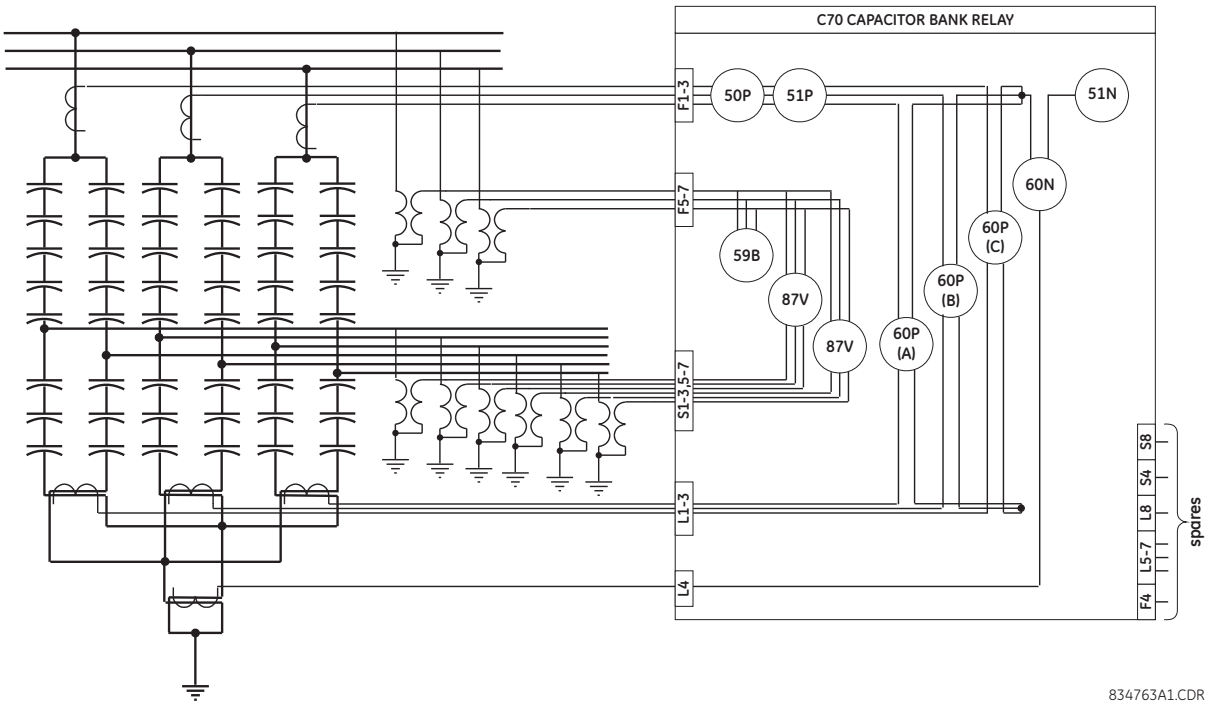

Figure 9–11: PARALLEL BANKS, GROUNDED, WITH TAPS AND CURRENT UNBALANCE PROTECTION

The normal functions of unbalance relaying are listed below.

- Trip the bank promptly if an unbalance indicates the possible presence of external arcing or a cascading fault within the capacitor bank.
- Provide early unbalance alarm signal(s) to indicate the operation of fuses (internally or externally fused capacitors) or failure of capacitor elements (fuseless or unfused capacitors).
- Trip the bank for unbalances that are large enough to indicate that continuing operation may result in the following.
  - Damage to remaining good capacitor units or elements from overvoltage.
  - Fuse malfunction.
  - Inappropriate filter operation (for capacitor banks that are a part of a harmonic filter).
  - Other undesirable consequences.

Note that there may be undetectable failure modes for each type of unbalance protection. These will need to be backed up by other types of protection.

b) UNBALANCE TRIP ELEMENT CONSIDERATIONS

The following points should be noted when using the unbalance trip element.

- The unbalance trip element time delay should be minimized to reduce damage from an arcing fault within the bank structure and prevent exposure of the remaining capacitor units to overvoltage conditions beyond their permissible limits. For a single-phase or an open-phase condition, the time delay should also be short enough to avoid damage to the current transformer or voltage transformer and to the relay system.
- The unbalance trip element should have enough time delay to avoid false operations due to inrush, system ground faults, switching of nearby equipment, and non-simultaneous pole operation of the energizing switch. For most applications, 0.1 seconds should be adequate. For unbalance relaying systems that operate on a system voltage unbalance (ground fault), a delay slightly longer than the upstream protection fault clearing time is required to avoid tripping due to a system fault. Longer delays increase the probability of catastrophic bank failure.

- With grounded capacitor banks, the failure of one pole of the switching device or the single phasing from a blown bank fuse will allow zero sequence currents to flow in system ground relays. Capacitor bank relaying, including the operating time of the switching device, should be coordinated with the operation of the system ground relays to avoid tripping system load.
- The unbalance trip element may need to be delayed to account for the settling time of the protection system on initial energization and for the transient response of certain capacitor voltage transformers, etc., which may be a part of the unbalance protection system.
- The unbalance trip scheme may include a lockout feature to prevent inadvertent closing of the capacitor bank switching device if an unbalance trip has occurred.
- To allow for the effects of inherent unbalance, the unbalance element trip should be set to operate at a signal level halfway between the critical step and the next lower step. The critical step is the number of fuse operations or shorted elements that will cause an overvoltage on healthy capacitor units in excess of 110% of the capacitor unit rated voltage or the capacitor unit manufacturer's recommended maximum continuous operating voltage. In addition, for internally fused capacitor units, the critical step may be the number of internal fuse operations at which tripping should occur as recommended by the capacitor manufacturer.
- If switch failure or single phasing due to a blown main fuse could result in the continuous voltage exceeding the relay or VT rating, additional elements in the relay should be configured to trip the bank for this condition.
- The unbalance element detects only the unbalance in the capacitor bank and in supply voltage and will not respond to capacitor overvoltage due to a balanced system voltage above nominal. The bank phase overvoltage should be configured to trip the bank for this condition.
- The maximum system operating voltage, with capacitor bank energized, should be used for setting unbalance relays.

c) UNBALANCE ALARM ELEMENT CONSIDERATIONS

To allow for the effects of inherent unbalance within the bank, the unbalance relay alarm should be set to operate at about one-half the level of the unbalance signal determined by the calculated alarm condition based on an idealized bank. The alarm should have sufficient time delay to override external disturbances.

9.3.3 PROTECTION FOR RACK FAULTS (ARC-OVER WITHIN CAPACITOR BANK)

The most effective protection for an arc-over within the capacitor bank is provided by a fast unbalance element. A short time delay for the unbalance elements minimizes the damage caused by rack faults. Intentional delays as short as 0.05 seconds have been used. This short unbalance time delay, however, should not be less than the maximum clearing time of the capacitor-unit or element fuse. Although the unbalance trip element is the most effective protection for arc detection of a series section, the neutral voltage type of unbalance element should not be relied upon for rack fault protection on capacitor banks where all three phases are not well separated.

Negative sequence elements can be used for inter-phase fault detection as they can be set to be more sensitive than phase overcurrent relays, but tripping should be delayed to coordinate with the other relays in the system. A setting of 10% of the rated capacitor current, taking into consideration the maximum system voltage unbalance and the maximum capacitance variation together with a time delay setting of 15 to 25 cycles, may provide adequate coordination for faults external to the bank. However, it may not prevent damage due to arcing faults within the bank structure.

9.3.4 OVERVOLTAGE

The capacitor bank and other equipment in the vicinity may be subjected to overvoltages resulting from abnormal system operating conditions. If the system voltage exceeds the capacitor or equipment capability with the capacitor bank on line, the bank should be removed with minimum time delay. Removing the capacitor bank from the system lowers the system voltage in the vicinity of the capacitor, reducing the overvoltage on other system elements.

Especially for very large EHV capacitor banks, it is advisable to install three-phase overvoltage protection (ANSI 59B) to trip the bank quickly for extreme overvoltage conditions. To avoid nuisance tripping during transient overvoltage conditions, in some cases, tripping is delayed by a timer. The C70 relay provides inverse time overvoltage characteristics required to decrease tripping time for large overvoltages.

Because this tripping is not due to a fault within the capacitor bank, the capacitor bank is not locked out.

9.3.5 OVERCURRENT

Phase and neutral time overcurrent elements can be applied with normal settings without encountering false operations due to inrush currents. The desirable minimum pickup is 135% of nominal phase current for grounded wye banks or 125% for ungrounded banks. Instantaneous elements (if used) should be set high to override inrush or outrush transients.

For effectively grounded systems with grounded wye capacitor banks, the high-frequency outrush current into an external ground fault will not normally operate the 51N ground element. The unbalanced capacitor bank load current caused by an external ground fault may be sufficient to cause the element to pick up and trip the capacitor bank if the 51N is set too low. To prevent this inadvertent tripping, the trip of the 51N element is normally set above the capacitor phase current.

9.3.6 LOSS OF BUS VOLTAGE

In some cases, it may be necessary to trip a shunt capacitor bank if the supply bus voltage is lost. Two conditions that may need to be considered are:

- Re-energizing a bank with a trapped charge.
- Energizing a capacitor bank without parallel load through a previously unenergized transformer.

The undervoltage element (ANSI device 27B) will detect loss of system voltage and trip the capacitor bank after a time delay. This delay prevents tripping of the bank for system faults external to the bank. The undervoltage element should be set so the element will not operate for voltages that require the capacitor bank to remain in service. Because this tripping is also not due to a fault within the capacitor bank (like system overvoltage tripping), the bank is not locked out.

9.4.1 DESCRIPTION

Consider protection of a capacitor bank with the following characteristics:

- V_{LL} = 138 kV fuseless.
- Q_B = 21 Mvar.
- Two parallel strings (S = 2) in each phase with N = 7 capacitor units rated Q_C = 500 kvar, V_C = 11.62 kV.
- Each capacitor unit consisting of n = 6 series capacitors.

Refer to the diagram below for details. Phase capacitors are connected to ground through a neutral capacitor rated Q_{CN} = 167 kvar, V_{CN} = 0.825 kV.

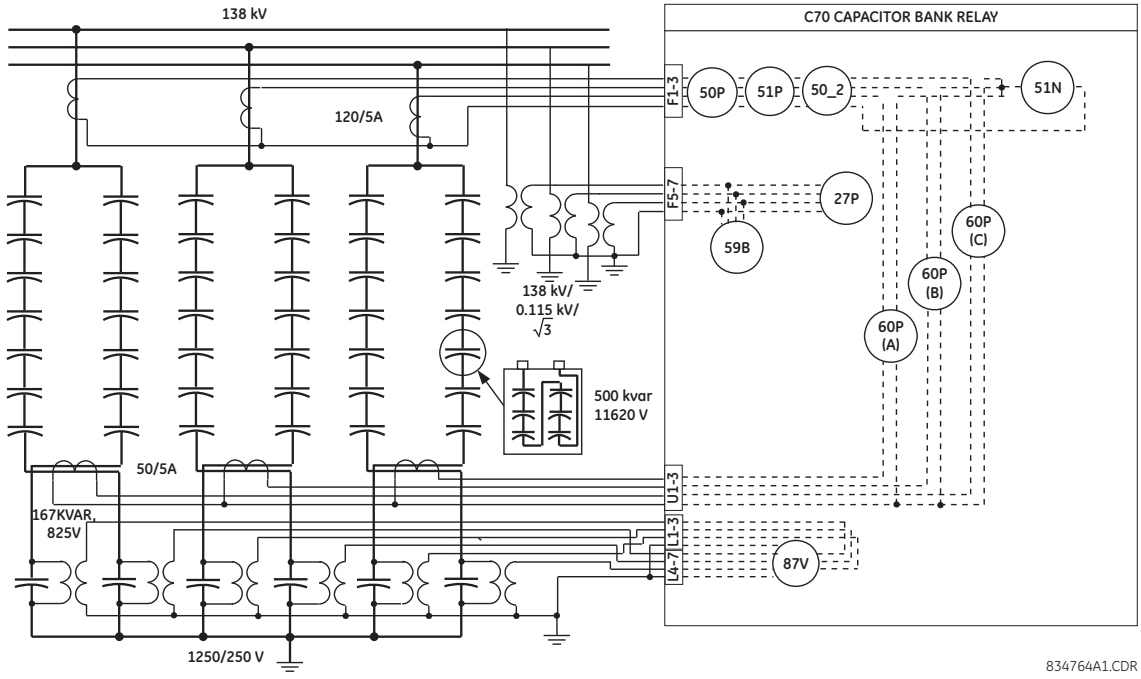

Figure 9–12: SAMPLE CAPACITOR BANK CONFIGURATION

Based on the bank configuration, CT connections, and VTs connections, a C70 model is chosen with three CT/VT modules: two type 8L modules (in slots F and U) and one type 8V module (in slot M) to provide following protection functionality.

- Negative-sequence instantaneous overcurrent (ANSI 50_2) to provide fast backup protection against arcing within capacitor bank.
- Phase overvoltage (ANSI 59B) to provide protection against overvoltages.
- Bank overcurrent protection, phase instantaneous overcurrent (ANSI 50P), neutral instantaneous overcurrent (ANSI 50N) and phase time overcurrent (ANSI 51P) to provide protection against major faults within the capacitor bank.
- Bank undervoltage (ANSI 27P) to detect loss of bus voltage and trip the bank.
- Voltage differential (ANSI 87V) to detect failure of one or more capacitor elements in a given string. Three voltage differential elements can be set for this application: one between two tap voltages (ANSI 87V-1) and two between the bus voltage and tap voltage in both strings (ANSI 87V-2 and 87V-3).
- Phase current unbalance (ANSI 60P) to detect failure of one or more capacitor elements in a given string.

9.4.2 VT AND CT SETUP

The CT and VT connections are shown in the figure above. The CT channels are connected as follows.

- The type 8L CT/VT module F1 to F3 three-phase CT channels are connected to the bus side three-phase CTs with a 120 / 5 A ratio.
- The type 8L CT/VT module U1 to U3 three-phase CT channels are connected to the neutral side window CTs with a 50 / 5 A ratio.

The following settings are applied in the EnerVista UR Setup software.

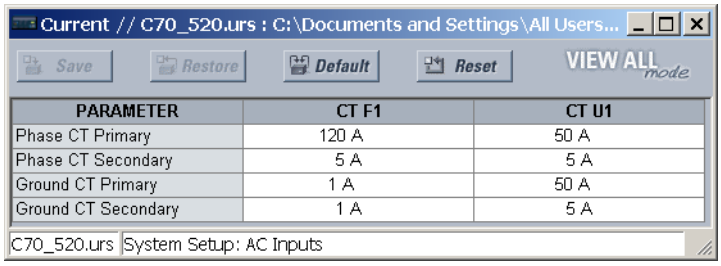

PARAMETER	CT F1	CT U1
Phase CT Primary	120 A	50 A
Phase CT Secondary	5 A	5 A
Ground CT Primary	1 A	50 A
Ground CT Secondary	1 A	5 A

The VT channels are connected as follows.

- The type 8L CT/VT module F5 to F7 three-phase VT channels are connected to the bus side three-phase VTs with a 138 / 0.115 kV ratio.
- The type 8V CT/VT module M1 to M3 and M5 to M7 three-phase VT channels are connected to two tap VTs with a 1.25 / 0.25 kV ratio. The nominal voltage is calculated below for normal bank conditions and a nominal system voltage of 138 kV (see impedance calculations the following sub-section).

The nominal bus phase VT voltage is:

$$V_{tap(bus)} = \frac{13800}{\sqrt{3}} = 79674.34 \text{ V} \quad \textbf{(EQ 9.1)}$$

The nominal tap VT voltage is:

$$V_{tap(nominal)} = \frac{138000 \times Z_C^b}{\sqrt{3} \times Z_C^t} = \frac{13800 \times 4.08}{\sqrt{3} \times 1894.42} = 171.41 \text{ V} \quad \textbf{(EQ 9.2)}$$

Therefore, the tap VT secondary voltage is set as:

$$V_{tap(secondary)} = \frac{V_{tap(nominal)}}{N_{tap(VT)}} = \frac{171.41 \text{ V}}{5} = 34.28 \text{ V} \quad \textbf{(EQ 9.3)}$$

Where the VT ratio $N_{tap(VT)}$ is calculated as:

$$N_{tap(VT)} = \frac{125 \text{ kV}}{0.25 \text{ kV}} = 5 \quad \textbf{(EQ 9.4)}$$

The following settings are applied in the EnerVista UR Setup software.

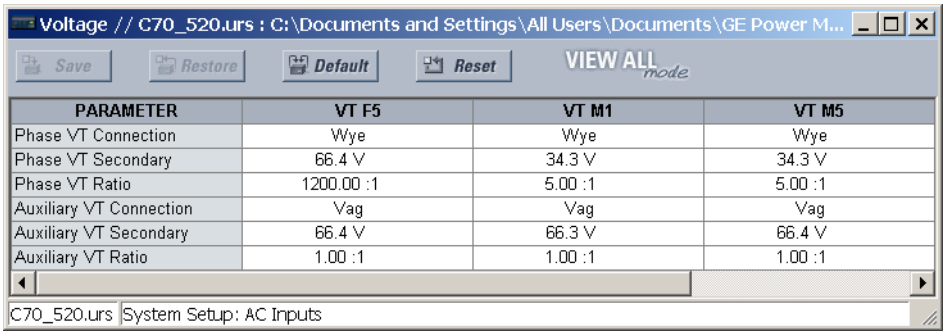

PARAMETER	VT F5	VT M1	VT M5
Phase VT Connection	Wye	Wye	Wye
Phase VT Secondary	66.4 V	34.3 V	34.3 V
Phase VT Ratio	1200.00 :1	5.00 :1	5.00 :1
Auxiliary VT Connection	Vag	Vag	Vag
Auxiliary VT Secondary	66.4 V	66.3 V	66.4 V
Auxiliary VT Ratio	1.00 :1	1.00 :1	1.00 :1

9.4.3 SOURCE ASSIGNMENT

The following sources must be assigned for the protection functions indicated.

- Source 1 (bus) is assigned with CT and VT banks connected to the bus, providing a signal source for overcurrent, phase current unbalance, overvoltage, and undervoltage functions.
- Source 2 (tap 1) and source 3 (tap 2) are assigned with the VT banks and split window CT bank connected to the tap point of two strings of the bank, providing a signal source for the voltage differential and phase unbalance functions.

The CT and VT connections shown in the figure above are assigned the following values in EnerVista UR Setup.

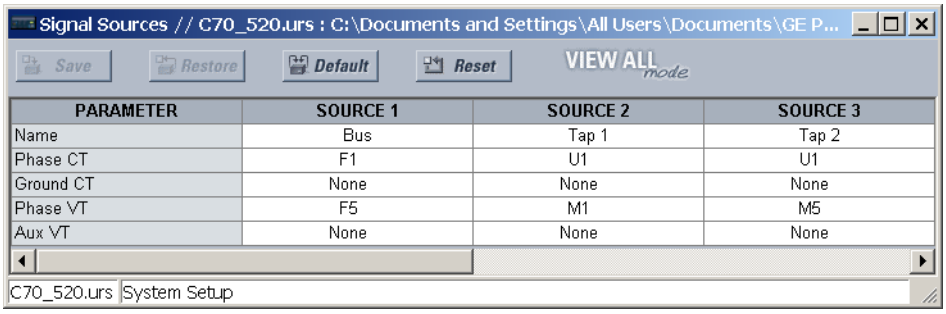

PARAMETER	SOURCE 1	SOURCE 2	SOURCE 3
Name	Bus	Tap 1	Tap 2
Phase CT	F1	U1	U1
Ground CT	None	None	None
Phase VT	F5	M1	M5
Aux VT	None	None	None

9.4.4 BANK UNBALANCE CALCULATIONS

The following values are used in unbalance calculations.

The impedance of one capacitor can:

$$Z_C^c = \frac{V_C^2}{Q_C} = \frac{(11.62\ \text{V})^2}{500 \times 10^{-3}\ \text{vars}} = 270.05\Omega \quad \textbf{(EQ 9.5)}$$

The impedance of one capacitor element, with n = 6 capacitor elements per can:

$$Z_C^e = \frac{Z_C^c}{n} = \frac{270.05\Omega}{6} = 45.01\Omega \quad \textbf{(EQ 9.6)}$$

The impedance of the top healthy capacitor string:

$$Z_C^s = Z_C^c \times N = 270.05\Omega \times 7 = 1890.34\Omega \quad \textbf{(EQ 9.7)}$$

The impedance of the bottom capacitor can:

$$Z_C^b = \frac{V_{CN}^2}{Q_{CN}} = \frac{(0.825\ \text{V})^2}{0.167\ \text{var}} = 4.08\ \Omega \quad \textbf{(EQ 9.8)}$$

The total impedance of the healthy capacitor string:

$$Z_C^t = Z_C^s + Z_C^b = 1890.34\Omega + 4.08\Omega = 1894.42\Omega \quad \textbf{(EQ 9.9)}$$

The maximum rated line-to-neutral system voltage:

$$V_{max} = V_C \times N + \frac{V_C \times N}{Z_C^s} \times Z_C^b = 11620\ \text{V} \times 7 + \frac{11620\ \text{V} \times 7}{1890.34\Omega} \times 4.08\ \Omega = 81515.37\ \text{V} \quad \textbf{(EQ 9.10)}$$

The maximum rated phase current of the healthy bank:

$$I_{max} = \frac{V_{max}}{Z_C^t/2} = \frac{81515.37\ \text{V}}{1894.92\Omega/2} = 86.06\ \text{A} \quad \textbf{(EQ 9.11)}$$

The maximum rated voltage across the healthy top section:

$$V_{top} = \frac{V_{max} \times Z_C^s}{Z_C^t} = \frac{81515.37\ \text{V} \times 1890.34\Omega}{1894.92\Omega} = 81340.40\ \text{V} \quad \textbf{(EQ 9.12)}$$

The maximum rated voltage across the healthy bottom section:

$$V_{bottom} = \frac{V_{max} \times Z_C^b}{Z_C^t} = \frac{81515.37\ \text{V} \times 4.08\ \Omega}{1894.92\Omega} = 175.37\ \text{V} \quad \textbf{(EQ 9.13)}$$

The voltage distribution factor for the healthy perfectly balanced bank for the 87V-2 and 87V-3 elements:

$$K_{tap} = \frac{V_{top}}{V_{bottom}} = \frac{81340.40\ \text{V}}{175.37\ \text{V}} = 463.8194 \quad \textbf{(EQ 9.14)}$$

The impedance of the string for the failed capacitors elements (for one failed element, $n_f = 1$:

$$Z_C^{sf} = Z_C^e(N \times n - n_f) + Z_C^b = 45.01\Omega \times (7 \times 6 - 1) + 4.08\ \Omega = 1849.41\Omega \quad \textbf{(EQ 9.15)}$$

The voltage at the tap in the section with one failed capacitor element in the string:

$$V_{tap2} = \frac{V_{max} \times Z_C^b}{Z_C^{sf}} = \frac{81515.37\ \text{V} \times 4.08\ \Omega}{1849.91\ \Omega} = 179.64\ \text{V} \quad \textbf{(EQ 9.16)}$$

The voltage of the top section with one capacitor element failed:

$$V_{top} = V_{max} - V_{tap2} \quad \textbf{(EQ 9.17)}$$

The overvoltage at the affected capacitors with one capacitor element failed:

$$\text{OV} = \frac{V_{f(top)} \times N \times n}{V_{top} \times (N \times n - n_f)} = \frac{81335.74\ \text{V} \times 7 \times 6}{81340.40\ \text{V} \times (7 \times 6 - 1)} = 1.024\ \text{pu} \quad \textbf{(EQ 9.18)}$$

The differential voltage between two taps with one failed capacitor element in the upper string, assuming $K = 1$ for 87V-1, in per-unit values is:

$$V_{diff(tap)} = \left|\frac{V_{tap1} - 1 \times V_{tap2}}{\text{VT}_{nom(tap)}}\right| = \left|\frac{175.374\ \text{V} - 1 \times 179.64\ \text{V}}{171.59\ \text{V}}\right| = 0.0249\ \text{pu} \quad \textbf{(EQ 9.19)}$$

The differential voltage between the bus voltage and the tap with one failed capacitor element in the upper string, assuming $K = 1$, for 87V-3 in per-unit values is:

$$V_{diff(string)} = \left|\frac{V_{f(top)} - K_{tap} \times V_{tap2}}{\text{VT}_{nom(bus)}}\right| = \left|\frac{175.374\ \text{V} - 463.8194 \times 179.64\ \text{V}}{79674.34\ \text{V}}\right| = 0.0249\ \text{pu} \quad \textbf{(EQ 9.20)}$$

The unbalance current in the window type CT between two strings with one failed capacitor element in the upper string:

$$I_{unbal} = \left|\frac{V_{max}}{Z_C^{sf} \times \text{CT}_{tap}} - \frac{V_{max}}{Z_C^{s} \times \text{CT}_{tap}}\right| = \left|\frac{81515.37\ \text{V}}{1845.33\Omega \times 50} - \frac{81515.37\ \text{V}}{1890.34\Omega \times 50}\right| = 0.0209\ \text{pu} \quad \textbf{(EQ 9.21)}$$

The following table summarizes the calculated values for the number of failed capacitors used to set the protection elements.

Table 9–1: UNBALANCE VALUES FOR MAXIMUM SYSTEM CONDITIONS

n_f	Z_C^s	Z_C^{sf}	V_{tap1}	V_{tap2}	V_{top}	OV	$V_{diff(tap)}$	$V_{diff(string)}$	I_{unbal}
0	1894.42 Ω	1894.42 Ω	175.37 V	175.37 V	81340.00 V	1.000 pu	0.0000 pu	0.0000 pu	0.0000 pu
1	1894.42 Ω	1849.41 Ω	175.37 V	179.64 V	81335.73 V	1.024 pu	0.0249 pu	0.0249 pu	0.0209 pu
2	1894.42 Ω	1804.40 Ω	175.37 V	184.12 V	81331.25 V	1.050 pu	0.0510 pu	0.0510 pu	0.0429 pu
3	1894.42 Ω	1759.39 Ω	175.37 V	188.83 V	81326.54 V	1.077 pu	0.0785 pu	0.0785 pu	0.0660 pu
4	1894.42 Ω	1714.38 Ω	175.37 V	193.79 V	81321.58 V	1.105 pu	0.1074 pu	0.1074 pu	0.0904 pu
5	1894.42 Ω	1669.38 Ω	175.37 V	199.01 V	81316.36 V	1.135 pu	0.1379 pu	0.1379 pu	0.1160 pu
6	1894.42 Ω	1624.37 Ω	175.37 V	204.52 V	81310.85 V	1.167 pu	0.1701 pu	0.1701 pu	0.1431 pu
7	1894.42 Ω	1579.36 Ω	175.37 V	210.35 V	81305.02 V	1.200 pu	0.2041 pu	0.2041 pu	0.1717 pu
8	1894.42 Ω	1534.35 Ω	175.37 V	216.52 V	81298.85 V	1.235 pu	0.2401 pu	0.2401 pu	0.2020 pu
9	1894.42 Ω	1489.34 Ω	175.37 V	223.07 V	81292.30 V	1.273 pu	0.2783 pu	0.2783 pu	0.2341 pu
10	1894.42 Ω	1444.34 Ω	175.37 V	230.02 V	81285.35 V	1.313 pu	0.3188 pu	0.3188 pu	0.2682 pu

To check the limits of protection sensitivity, the same calculations are repeated for the minimum system conditions, which are considered to be 0.85 pu of nominal system voltage.

The minimum line to neutral system voltage is:

$$V_{min} = \frac{0.85 \times V_{nom}}{\sqrt{3}} = \frac{0.85 \times 138000\ \text{V}}{\sqrt{3}} = 67723\ \text{V} \quad \textbf{(EQ 9.22)}$$

The following table summarizes the unbalance values during minimum system conditions.

Table 9–2: UNBALANCE VALUES FOR MINIMUM SYSTEM CONDITIONS

n_f	Z_C^s	Z_C^{sf}	V_{tap1}	V_{tap2}	V_{top}	OV	$V_{diff(tap)}$	$V_{diff(string)}$	I_{unbal}
0	1894.42 Ω	1894.42 Ω	145.70 V	145.70 V	67577.30 V	1.000 pu	0.0000 pu	0.0000 pu	0.0000 pu
1	1894.42 Ω	1849.41 Ω	145.70 V	149.24 V	67573.76 V	1.024 pu	0.0207 pu	0.0207 pu	0.0174 pu
2	1894.42 Ω	1804.40 Ω	145.70 V	152.97 V	67570.03 V	1.050 pu	0.0424 pu	0.0424 pu	0.0357 pu
3	1894.42 Ω	1759.39 Ω	145.70 V	156.88 V	67566.12 V	1.077 pu	0.0652 pu	0.0652 pu	0.0549 pu
4	1894.42 Ω	1714.38 Ω	145.70 V	161.00 V	67562.00 V	1.105 pu	0.0893 pu	0.0893 pu	0.0751 pu
5	1894.42 Ω	1669.38 Ω	145.70 V	165.34 V	67557.66 V	1.135 pu	0.1146 pu	0.1146 pu	0.0964 pu
6	1894.42 Ω	1624.37 Ω	145.70 V	169.92 V	67553.08 V	1.167 pu	0.1413 pu	0.1413 pu	0.1189 pu
7	1894.42 Ω	1579.36 Ω	145.70 V	174.76 V	67548.24 V	1.200 pu	0.1696 pu	0.1696 pu	0.1426 pu
8	1894.42 Ω	1534.35 Ω	145.70 V	179.89 V	67543.11 V	1.235 pu	0.1995 pu	0.1995 pu	0.1678 pu
9	1894.42 Ω	1489.34 Ω	145.70 V	185.32 V	67537.68 V	1.273 pu	0.2312 pu	0.2312 pu	0.1945 pu
10	1894.42 Ω	1444.34 Ω	145.70 V	191.10 V	67531.90 V	1.313 pu	0.2649 pu	0.2649 pu	0.2228 pu

The balance values during minimum operating conditions may be used to check sensitivity.

9.4.5 BANK VOLTAGE DIFFERENTIAL SETTINGS

The bank configuration, CT location, and VT locations allow applying three voltage differential elements:

- An 87V-1 differential element measuring the differential voltage between the two bottom taps.
- An 87V-2 differential element measuring the differential voltage between the upper capacitor string and bottom capacitor can for string 1.
- An 87V-3 differential element measuring the differential voltage between the upper capacitor string and bottom capacitor can for string 2.

Two voltage differential (87V) stages provide trip and alarm levels during capacitor unit failures in each differential element. The capacitor units are subject to overvoltage if one or more capacitors units are shorted out. The voltage differential trip pickup setting is programmed for value of 110% of capacitor rated voltage. As seen from the *Unbalance values for maximum system conditions* table above, a failure of four capacitor elements causes a 10.5% overvoltage.

The pickup setting for the stage 1 differential alarm element is chosen for one element failure.

$$87\text{V alarm} = 0.9 V_{diff(f1\_max)} = 0.9 \times 0.0249 \text{ pu} = 0.0224 \text{ pu} \quad \textbf{(EQ 9.23)}$$

The alarm delay is set to 10 seconds to avoid alarming during transient conditions.

The pickup setting for the stage 2 differential trip element is programmed as the differential voltage during maximum system conditions midway between the third and fourth capacitor element failure differential voltages.

$$87\text{V trip} = \frac{V_{diff(f4\_max)} + V_{diff(f3\_max)}}{2} = \frac{0.1074 \text{ pu} + 0.0785 \text{ pu}}{2} = 0.093 \text{ pu} \quad \textbf{(EQ 9.24)}$$

Therefore, the trip delay is set to 50 ms.

The following setting values for the voltage differential 1 element between two tap voltages are programmed in the EnerVista UR Setup software.

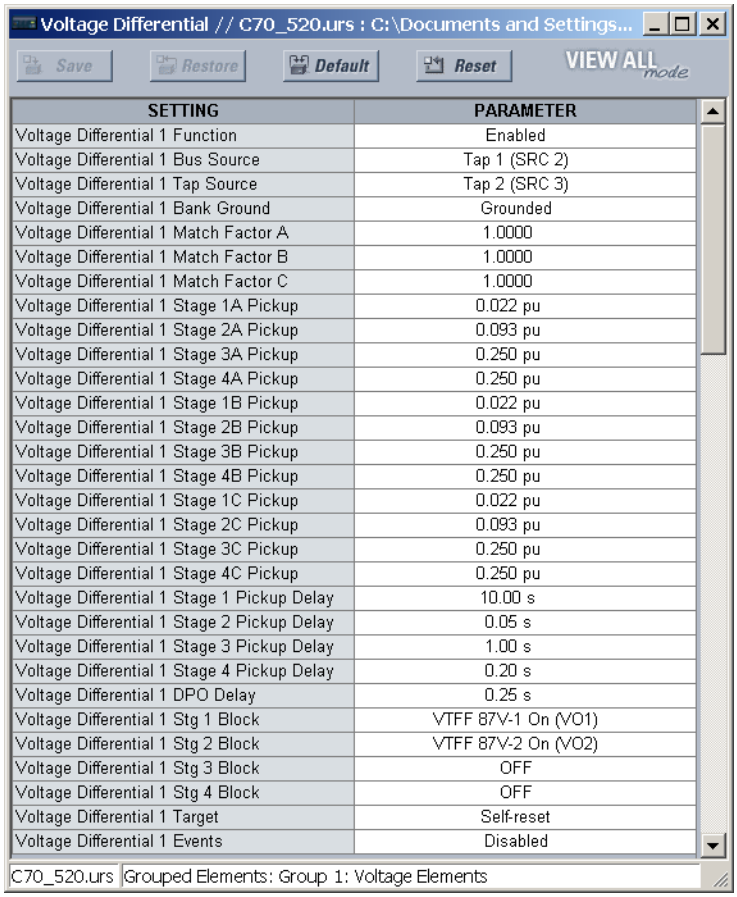

SETTING	PARAMETER
Voltage Differential 1 Function	Enabled
Voltage Differential 1 Bus Source	Tap 1 (SRC 2)
Voltage Differential 1 Tap Source	Tap 2 (SRC 3)
Voltage Differential 1 Bank Ground	Grounded
Voltage Differential 1 Match Factor A	1.0000
Voltage Differential 1 Match Factor B	1.0000
Voltage Differential 1 Match Factor C	1.0000
Voltage Differential 1 Stage 1A Pickup	0.022 pu
Voltage Differential 1 Stage 2A Pickup	0.093 pu
Voltage Differential 1 Stage 3A Pickup	0.250 pu
Voltage Differential 1 Stage 4A Pickup	0.250 pu
Voltage Differential 1 Stage 1B Pickup	0.022 pu
Voltage Differential 1 Stage 2B Pickup	0.093 pu
Voltage Differential 1 Stage 3B Pickup	0.250 pu
Voltage Differential 1 Stage 4B Pickup	0.250 pu
Voltage Differential 1 Stage 1C Pickup	0.022 pu
Voltage Differential 1 Stage 2C Pickup	0.093 pu
Voltage Differential 1 Stage 3C Pickup	0.250 pu
Voltage Differential 1 Stage 4C Pickup	0.250 pu
Voltage Differential 1 Stage 1 Pickup Delay	10.00 s
Voltage Differential 1 Stage 2 Pickup Delay	0.05 s
Voltage Differential 1 Stage 3 Pickup Delay	1.00 s
Voltage Differential 1 Stage 4 Pickup Delay	0.20 s
Voltage Differential 1 DPO Delay	0.25 s
Voltage Differential 1 Stg 1 Block	VTFF 87V-1 On (VO1)
Voltage Differential 1 Stg 2 Block	VTFF 87V-2 On (VO2)
Voltage Differential 1 Stg 3 Block	OFF
Voltage Differential 1 Stg 4 Block	OFF
Voltage Differential 1 Target	Self-reset
Voltage Differential 1 Events	Disabled

C70_520.urs | Grouped Elements: Group 1: Voltage Elements

Note that match factor shown above assumes perfect bank balance. This must be adjusted when the bank is energized during the differential function auto-setting procedure tune up.

The voltage differential element must be blocked during a VT fuse failure at any tap. The voltage differential element is dependent on both source VTs. These VTs must be blocked if one or both of them has a VT fuse failure condition. Therefore, as shown in the following figure, a blocking input for each element is created with FlexLogic™.

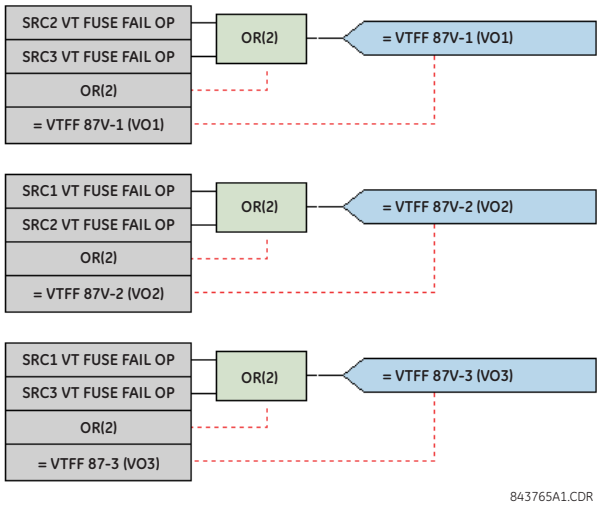

Figure 9–13: VOLTAGE DIFFERENTIAL BLOCKING DURING VT FUSE FAILURE

The 87V-2 and 87V-3 differential elements for the strings against tap voltage are created in a similar manner. In these cases, the *K* factor will be different, reflecting the voltage division of *K* = 463.8194 between the string and tap capacitor voltages.

9.4.6 BANK PHASE CURRENT UNBALANCE SETTINGS

Two phase current unbalance (ANSI 60P) stages are used to provide trip and alarm levels during capacitor unit failures in each differential element.

The pickup setting for the stage 1 phase current unbalance alarm element is programmed for one element failure.

$$\text{60P alarm} = 0.9 I_{unbal(f1\_max)} = 0.9 \times 0.0209 \text{ pu} = 0.019 \text{ pu} \quad \textbf{(EQ 9.25)}$$

Therefore, the alarm delay is specified as 10 seconds. The following setting values are programmed in the EnerVista UR Setup software.

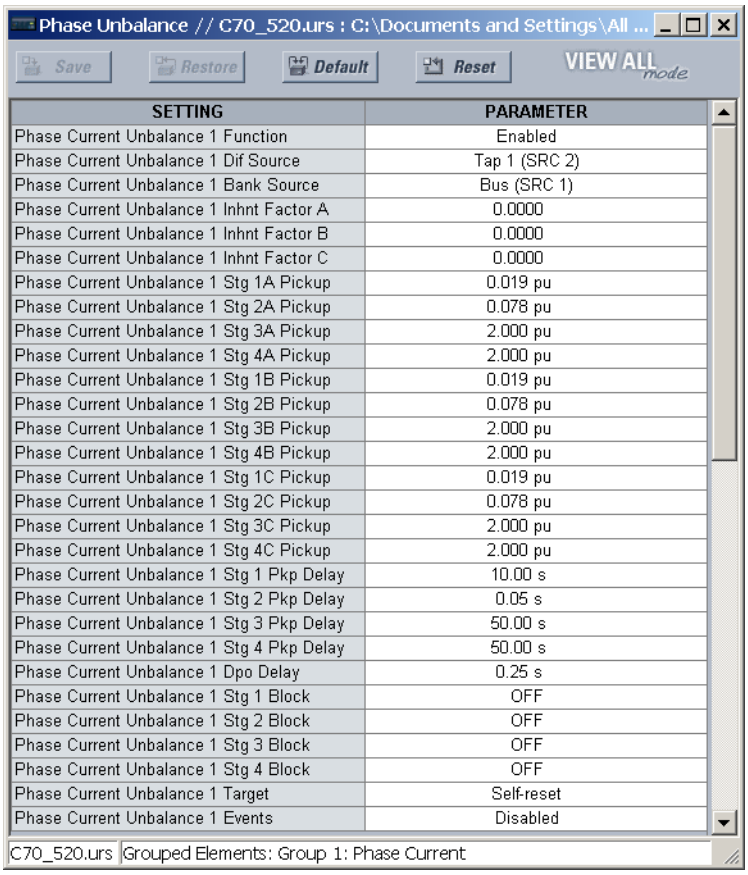

SETTING	PARAMETER
Phase Current Unbalance 1 Function	Enabled
Phase Current Unbalance 1 Dif Source	Tap 1 (SRC 2)
Phase Current Unbalance 1 Bank Source	Bus (SRC 1)
Phase Current Unbalance 1 Inhnt Factor A	0.0000
Phase Current Unbalance 1 Inhnt Factor B	0.0000
Phase Current Unbalance 1 Inhnt Factor C	0.0000
Phase Current Unbalance 1 Stg 1A Pickup	0.019 pu
Phase Current Unbalance 1 Stg 2A Pickup	0.078 pu
Phase Current Unbalance 1 Stg 3A Pickup	2.000 pu
Phase Current Unbalance 1 Stg 4A Pickup	2.000 pu
Phase Current Unbalance 1 Stg 1B Pickup	0.019 pu
Phase Current Unbalance 1 Stg 2B Pickup	0.078 pu
Phase Current Unbalance 1 Stg 3B Pickup	2.000 pu
Phase Current Unbalance 1 Stg 4B Pickup	2.000 pu
Phase Current Unbalance 1 Stg 1C Pickup	0.019 pu
Phase Current Unbalance 1 Stg 2C Pickup	0.078 pu
Phase Current Unbalance 1 Stg 3C Pickup	2.000 pu
Phase Current Unbalance 1 Stg 4C Pickup	2.000 pu
Phase Current Unbalance 1 Stg 1 Pkp Delay	10.00 s
Phase Current Unbalance 1 Stg 2 Pkp Delay	0.05 s
Phase Current Unbalance 1 Stg 3 Pkp Delay	50.00 s
Phase Current Unbalance 1 Stg 4 Pkp Delay	50.00 s
Phase Current Unbalance 1 Dpo Delay	0.25 s
Phase Current Unbalance 1 Stg 1 Block	OFF
Phase Current Unbalance 1 Stg 2 Block	OFF
Phase Current Unbalance 1 Stg 3 Block	OFF
Phase Current Unbalance 1 Stg 4 Block	OFF
Phase Current Unbalance 1 Target	Self-reset
Phase Current Unbalance 1 Events	Disabled

The pickup setting for the stage 2 current unbalance trip element is specified as the unbalance current during maximum system conditions midway between the third and fourth capacitor element failure unbalance currents.

$$\text{60P trip} = \frac{I_{unbal(f4\_max)} + I_{unbal(f3\_max)}}{2} = \frac{0.0904\ \text{pu} + 0.0660\ \text{pu}}{2} = 0.078\ \text{pu} \quad \textbf{(EQ 9.26)}$$

Therefore, the trip delay is chosen 50 ms.

9.4.7 BANK PHASE OVERVOLTAGE SETTINGS

To protect the capacitor bank from overvoltage resulting from abnormal system conditions, the capability of the bank to withstand transient overvoltages must be evaluated according to the IEEE 1036-1992 standard or to manufacturer specifications. For example, consider the following manufacturer overvoltage data:

- 2 pu overvoltage toleration for 0.25 second.
- 1.5 pu overvoltage toleration for 15 seconds.
- 1.25 pu overvoltage toleration for 5 minutes.

When the relay settings are calculated, the number of prospective overvoltage transients stressing the capacitor insulation during the bank lifetime must be taken into account. As such, it is preferable to set the relay conservatively.

Based on the manufacturer overvoltage data above, three overvoltage trip stages are applied using a factor of 0.9 for the stage pickup overvoltage levels and half of the allowable time indicated above.

$$\begin{aligned} \text{59B pickup (stage 1)} &= 0.9 \times 1.25 = 1.125\ \text{pu} \\ \text{59B pickup (stage 2)} &= 0.9 \times 1.5 = 1.35\ \text{pu} \\ \text{59B pickup (stage 3)} &= 0.9 \times 2 = 1.80\ \text{pu} \end{aligned} \quad \textbf{(EQ 9.27)}$$

$$\text{59B delay (stage 1)} = 0.5 \times 5 \times 60 = 150 \text{ seconds}$$
$$\text{59B delay (stage 2)} = 0.5 \times 15 = 7.5 \text{ seconds} \quad \textbf{(EQ 9.28)}$$
$$\text{59B delay (stage 3)} = 0.5 \times 0.25 = 0.125 \text{ seconds}$$

The following setting values are programmed in the EnerVista UR Setup software.

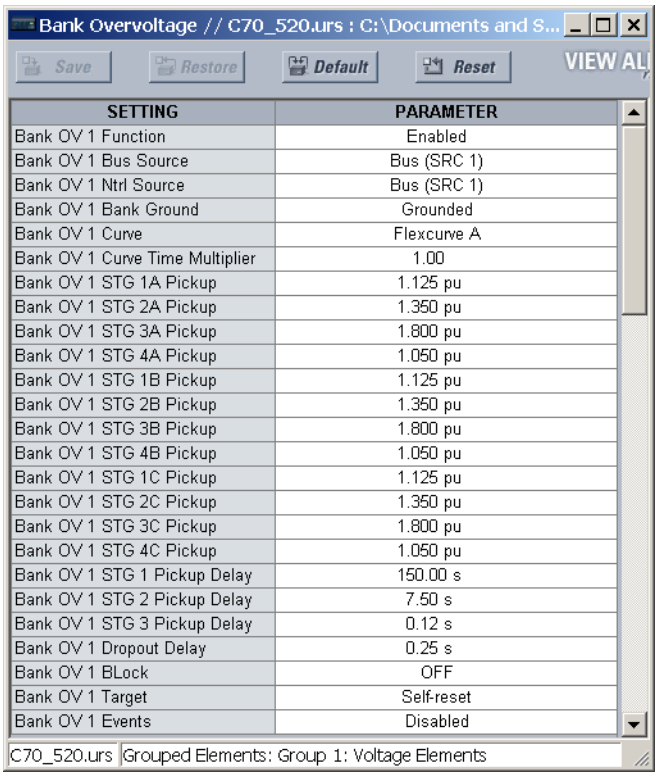

SETTING	PARAMETER
Bank OV 1 Function	Enabled
Bank OV 1 Bus Source	Bus (SRC 1)
Bank OV 1 Ntrl Source	Bus (SRC 1)
Bank OV 1 Bank Ground	Grounded
Bank OV 1 Curve	Flexcurve A
Bank OV 1 Curve Time Multiplier	1.00
Bank OV 1 STG 1A Pickup	1.125 pu
Bank OV 1 STG 2A Pickup	1.350 pu
Bank OV 1 STG 3A Pickup	1.800 pu
Bank OV 1 STG 4A Pickup	1.050 pu
Bank OV 1 STG 1B Pickup	1.125 pu
Bank OV 1 STG 2B Pickup	1.350 pu
Bank OV 1 STG 3B Pickup	1.800 pu
Bank OV 1 STG 4B Pickup	1.050 pu
Bank OV 1 STG 1C Pickup	1.125 pu
Bank OV 1 STG 2C Pickup	1.350 pu
Bank OV 1 STG 3C Pickup	1.800 pu
Bank OV 1 STG 4C Pickup	1.050 pu
Bank OV 1 STG 1 Pickup Delay	150.00 s
Bank OV 1 STG 2 Pickup Delay	7.50 s
Bank OV 1 STG 3 Pickup Delay	0.12 s
Bank OV 1 Dropout Delay	0.25 s
Bank OV 1 BLock	OFF
Bank OV 1 Target	Self-reset
Bank OV 1 Events	Disabled

9.4.8 BANK PHASE UNDERVOLTAGE SETTINGS

Bank undervoltage protection is required to take bank out-of-service when the supply bus voltage is lost. The pickup setting is specified as 0.7 pu with a time delay of 1 second, based on maximum fault clearing time. The bank undervoltage element is blocked during VT fuse fail conditions.

The following setting values are programmed in the EnerVista UR Setup software.

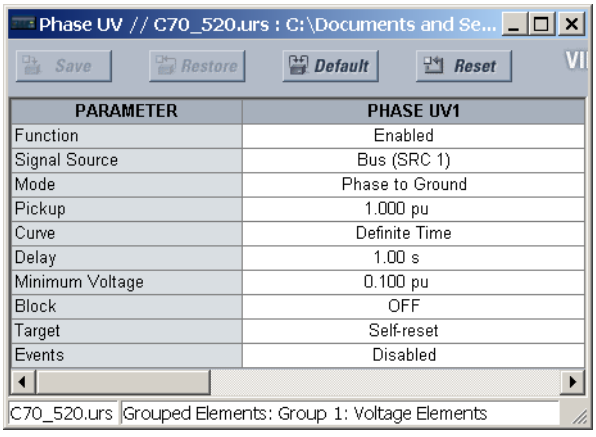

PARAMETER	PHASE UV1
Function	Enabled
Signal Source	Bus (SRC 1)
Mode	Phase to Ground
Pickup	1.000 pu
Curve	Definite Time
Delay	1.00 s
Minimum Voltage	0.100 pu
Block	OFF
Target	Self-reset
Events	Disabled

9.4.9 BANK OVERCURRENT PROTECTION

Bank overcurrent protection is required to protect capacitor banks against major faults, such as line-to-line or line-to-ground faults. It is desirable to set overcurrent protection to be as low and as fast as possible, with only enough delay to avoid tripping on external system disturbances.

During bank energization, the capacitor charge current inrush may cause significant neutral currents approaching the bank phase current levels. Also, during a system SLG fault, unbalanced bank neutral currents can be as high as bank phase currents. Because of these considerations, the neutral time overcurrent pickup is programmed equal to the phase time overcurrent pickup and is set to 1.25 pu. The delay for these elements should be specified longer than the maximum system fault clearing time (for example 0.5 second).

The phase instantaneous overcurrent element can be set to a value three to four times the capacitor bank rated current to override back-to-back bank switching.

Negative-sequence instantaneous overcurrent protection is required to provide backup protection for phase current unbalance during rack faults in the banks where phase capacitors are not well separated. Programming the negative-sequence instantaneous overcurrent pickup at 10% of the nominal bank phase current with a delay of 250 to 400 ms typically provides adequate coordination for faults external to the bank and protection for internal rack faults.

10.1.1 REPLACE A MODULE

WARNING

Withdraw or insert a module only when control power has been removed from the unit, and be sure to insert only the correct module type into a slot, else personal injury, damage to the unit or connected equipment, or undesired operation can result.

NOTICE

To avoid damage to the equipment, use proper electrostatic discharge protection (for example, a static strap) when coming in contact with modules while the relay is energized.

The relay, being modular in design, allows for the withdrawal and insertion of modules. Modules must only be replaced with like modules in their original factory configured slots.

The enhanced faceplate can be opened to the left, once the thumb screw has been removed, as shown below. This allows for easy accessibility of the modules for withdrawal. The new wide-angle hinge assembly in the enhanced front panel opens completely and allows easy access to all modules in the C70.

842812A1.CDR

Figure 10–1: UR MODULE WITHDRAWAL AND INSERTION (ENHANCED FACEPLATE)

The basic faceplate can be opened to the left, once the sliding latch on the right side has been pushed up, as shown below. This allows for easy accessibility of the modules for withdrawal.

842760A1.CDR

Figure 10–2: UR MODULE WITHDRAWAL AND INSERTION (BASIC FACEPLATE)

To properly remove a module, the ejector/inserter clips, located at the top and bottom of each module, must be pulled simultaneously. Before performing this action, **control power must be removed from the relay**. Record the original location of the module to ensure that the same or replacement module is inserted into the correct slot. While modules with current input provide automatic shorting of external CT circuits, for CT/VT modules it is recommended to short/isolate external circuits accordingly for maximum safety.

To properly insert a module, ensure that the **correct** module type is inserted into the **correct** slot position. The ejector/inserter clips located at the top and at the bottom of each module must be in the disengaged position as the module is smoothly inserted into the slot. Once the clips have cleared the raised edge of the chassis, engage the clips simultaneously. When the clips have locked into position, the module will be fully inserted.

CPU connections must be individually disconnected from the module before the module can be removed from the chassis.

A battery powers the real time clock on startup of the device.

When required, the battery can be replaced. The power supply modules were upgraded in 2014 to SH/SL from RH/RL, but the order code when purchasing a UR with redundant power supply remained as RH/RL so that customers can continue to use the same order codes. The order code can read RH or RL, while the module inside the unit reads SH or SL. The order code for replacement redundant power supply modules was changed to SH/SL. To determine which procedure to use, see the power supply module or use the photographs here.

a) REPLACE BATTERY FOR RH/RL POWER SUPPLY

The power supply module contains the battery.

⚠CAUTION **To avoid injury, ensure that the unit has been powered off for a minimum of three minutes before replacing the battery.**

Risk of fire if battery is replaced with incorrect type or polarity.

To replace the battery:

1. Turn off the power to the unit.
2. Wait a minimum of three minutes to ensure that there is no power to the battery.
3. As outlined in the previous section, open the unit by sliding up the plastic latch on the right side of the front panel (basic front panel) or unscrewing the panel (enhanced front panel).
4. For the basic front panel, it needs to be removed in order to access the power supply module, which is typically in the first slot on the left side and blocked by the hinge of the front panel. To remove the front panel, unscrew the bracket on the front left side of the unit.
5. Simultaneously pull the ejector clips at the top and bottom of the power supply module and remove the module.
6. Unscrew the screw that attaches the metal cover to the module.
7. Slide the metal cover away from the clips about 1 cm (1/4 inch) and remove the cover.
8. Unclip the black plastic holder that keeps the battery in place. The plastic clips into the socket at the bottom on both sides. Use a flat-head screwdriver if you cannot unclip the plastic with your fingers.
9. Observe the + and - polarity of the battery and replace it with the same polarity as marked on the battery holder. Replace the battery with the identical make and model. For example, do not use a rechargeable battery.

Figure 10–3: BATTERY LOCATION ON RH/RL POWER SUPPLY MODULE

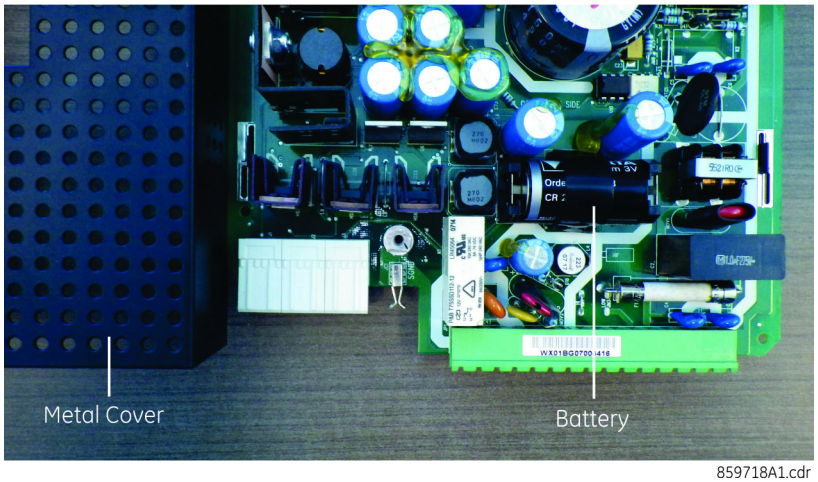

859718A1.cdr

10. Reinstall the battery clip and the metal cover, and reinsert the power supply module into the unit.
11. Power on the unit.
12. Dispose of the old battery as outlined in the next section.

b) REPLACE BATTERY FOR SH/SL POWER SUPPLY

The power supply module contains the battery.

⚠CAUTION **To avoid injury, ensure that the unit has been powered off for a minimum of three minutes before replacing the battery.**

Risk of fire if battery is replaced with incorrect type or polarity.

To replace the battery:

13. Turn off the power to the unit.
14. Wait a minimum of three minutes to ensure that there is no power to the battery.
15. As outlined in the previous section, open the unit by sliding up the plastic latch on the right side of the front panel (basic front panel) or unscrewing the panel (enhanced front panel).
16. For the basic front panel, it needs to be removed in order to access the power supply module, which is typically in the first slot on the left side and blocked by the hinge of the front panel. To remove the front panel, unscrew the bracket on the left side of the unit.
17. Remove the power supply module by simultaneously pulling the ejector clips at the top and bottom of the module and sliding it out.
18. Unscrew all four screws (not three) that attach the metal cover to the module. The fourth screw is at the back end of the module, on the opposite side from the clips, beside the white electronics part (see figure).
19. Slide the metal cover away from the clips about 0.5 cm (1/8 inch) and remove the cover.
20. Unclip the black plastic holder that keeps the battery in place. The plastic clips into the socket at the bottom on both sides—pull the plastic away from the battery. Use a flat-head screwdriver if you cannot unclip the plastic with your fingers.
21. Replace the battery with the identical make and model. For example, do not use a rechargeable battery. Observe the + and - polarity of the battery and replace it with the same polarity as marked on the battery holder.

Figure 10–4: BATTERY LOCATION ON SH/SL POWER SUPPLY MODULE

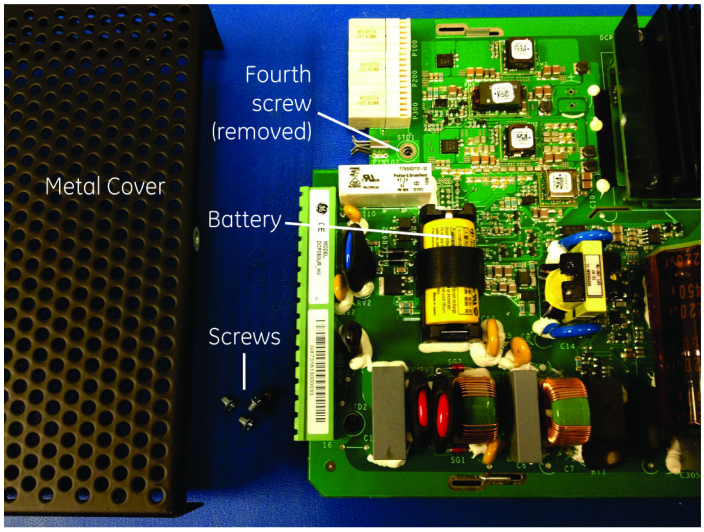

859717A1.cdr

22. Reinstall the battery holder and the metal cover, and reinsert the power supply module into the unit.
23. Power on the unit.
24. Dispose of the old battery as outlined in the next section.

EN Battery Disposal
This product contains a battery that cannot be disposed of as unsorted municipal waste in the European Union. See the product documentation for specific battery information. The battery is marked with this symbol, which may include lettering to indicate cadmium (Cd), lead (Pb), or mercury (Hg). For proper recycling return the battery to your supplier or to a designated collection point. For more information see: www.recyclethis.info.

CS Nakládání s bateriemi
Tento produkt obsahuje baterie, které nemohou být zneškodněny v Evropské unii jako netříděný komunální odpadu. Viz dokumentace k produktu pro informace pro konkrétní baterie. Baterie je označena tímto symbolem, který může zahrnovat i uvedena písmena, kadmium (Cd), olovo (Pb), nebo rtuť (Hg). Pro správnou recyklaci baterií vraťte svémudodavateli nebo na určeném sběrném místě. Pro více informací viz: www.recyclethis.info.

DA Batteri affald
Dette produkt indeholder et batteri som ikke kan bortskaffes sammen med almindeligt husholdningsaffald i Europa. Se produktinformation for specifikke informationer om batteriet. Batteriet er forsynet med indgraveret symboler for hvad batteriet indeholder: kadmium (Cd), bly (Pb) og kviksølv (Hg). Europæiske brugere af elektrisk udstyr skal aflevere kasserede produkter til genbrug eller til leverandøren. Yderligere oplysninger findes på webstedet www.recyclethis.info.

DE Entsorgung von Batterien
Dieses Produkt beinhaltet eine Batterie, die nicht als unsortierter städtischer Abfall in der europäischen Union entsorgt werden darf. Beachten Sie die spezifischen Batterie-informationen in der Produktdokumentation. Die Batterie ist mit diesem Symbol gekennzeichnet, welches auch Hinweise auf möglicherweise enthaltene Stoffe wie Kadmium (Cd), Blei (Pb) oder Quecksilber (Hektogramm) darstellt. Für die korrekte Wiederverwertung bringen Sie diese Batterie zu Ihrem lokalen Lieferanten zurück oder entsorgen Sie das Produkt an den gekennzeichneten Sammelstellen. Weitere Informationen hierzu finden Sie auf der folgenden Website: www.recyclethis.info.

EL Απόρριψη μπαταριών
Αυτό το προϊόν περιέχει μια μπαταρία που δεν πρέπει να απορρίπτεται σε δημόσια συστήματα απόρριψης στην Ευρωπαϊκή Κοινότητα. Δείτε την τεκμηρίωση του προϊόντος για συγκεκριμένες πληροφορίες που αφορούν τη μπαταρία. Η μπαταρία είναι φέρει σήμανση με αυτό το σύμβολο, το οποίο μπορεί να περιλαμβάνει γράμματα για να δηλώσουν το κάδμιο (Cd), τον μόλυβδο (Pb), ή τον υδράργυρο (Hg). Για την κατάλληλη ανακύκλωση επιστρέψτε την μπαταρία στον προμηθευτή σας ή σε καθορισμένο σημείο συλλογής. Για περισσότερες πληροφορίες δείτε: www.recyclethis.info.

ES Eliminacion de baterias
Este producto contiene una batería que no se pueda eliminar como basura normal sin clasificar en la Unión Europea. Examine la documentación del producto para la información específica de la batería. La batería se marca con este símbolo, que puede incluir siglas para indicar el cadmio (Cd), el plomo (Pb), o el mercurio (Hg). Para el reciclaje apropiado, devuelva este producto a su distribuidor ó deshágase de él en los puntos de reciclaje designados. Para mas información : wwwrecyclethis.info.

ET Patareide kõrvaldamine
Käesolev toode sisaldab patareisid, mida Euroopa Liidus ei tohi kõrvaldada sorteerimata olmejäätmetena. Andmeid patareide kohta vaadake toote dokumentatsioonist. Patareid on märgistatud käesoleva sümboliga, millel võib olla kaadmiumi (Cd), pliid (Pb) või elavhõbedat (Hg) tähistavad tähed. Nõuetekohaseks ringlusse võtmiseks tagastage patarei tarnijale või kindlaksmääratud vastuvõtupunkti. Lisainformatsiooni saab Internetist aadressil: www.recyclethis.info.

FI Paristoje ja akkujen hävittäminen
Tuote sisältää pariston, jota ei saa hävittää Euroopan Unionin alueella talousjätteen mukana. Tarkista tuoteselosteesta tuotteen tiedot. Paristo on merkitty tällä symbolilla ja saattaa sisältää cadmiumia (Cd), lyijyä (Pb) tai elohopeaa (Hg). Oikean kierrätystavan varmistamiseksi palauta tuote paikalliselle jälleenmyyjälle tai palauta se paristojen keräyspisteeseen. Lisätietoja sivuilla www.recyclethis.info.

FR Élimination des piles
Ce produit contient une batterie qui ne peuvent être éliminés comme déchets municipaux non triés dans l'Union européenne. Voir la documentation du produit au niveau des renseignements sur la pile. La batterie est marqué de ce symbole, qui comprennent les indications cadmium (Cd), plomb (Pb), ou mercure (Hg). Pour le recyclage, retourner la batterie à votre fournisseur ou à un point de collecte. Pour plus d'informations, voir: www.recyclethis.info.

HU Akkumulátor hulladék kezelése
Ezen termék akkumulátort tartalmaz, amely az Európai Unión belül csak a kijelölt módon és helyen dobható ki. A terméken illetve a mellékelt ismertetőn olvasható a kadmium (Cd), ólom (Pb) vagy higany (Hg) tartalomra utaló betűjelzés. A hulladék akkumulátor leadható a termék forgalmazójánál új akkumulátor vásárlásakor, vagy a kijelölt elektronikai hulladékudvarokban. További információ a www.recyclethis.info oldalon.

IT Smaltimento batterie
Questo prodotto contiene una batteria che non può essere smaltita nei comuni contenitori per lo smaltimento rifiuti, nell' Unione Europea. Controllate la documentazione del prodotto per le informazioni specifiche sulla batteria. La batteria è contrassegnata con questo simbolo e può includere alcuni caratteri ad indicare la presenza di cadmio (Cd), piombo (Pb) oppure mercurio (Hg). Per il corretto smaltimento, potete restituirli al vostro fornitore locale, oppure rivolgervi e consegnarli presso i centri di raccolta preposti. Per maggiori informazioni vedere: ww.recyclethis.info.

LT Baterijų šalinimas
Šios įrangos sudėtyje yra baterijų, kurias draudžiama šalinti Europos Sąjungos viešose nerūšiuotų atliekų šalinimo sistemose. Informaciją apie baterijas galite rasti įrangos techninėje dokumentacijoje. Baterijos žymimos šiuo simboliu, papildomai gali būti nurodoma kad baterijų sudėtyje yra kadmio (Cd), švino (Pb) ar gyvsidabrio (Hg). Eksploatavimui nebetinkamas baterijas pristatykite į tam skirtas surinkimo vietas arba grąžinkite jas tiesioginiam tiekėjui, kad jos būtų tinkamai utilizuotos. Daugiau informacijos rasite šioje interneto svetainėje: www.recyclethis.info.

LV Bateriju likvidēšana
Šis produkts satur bateriju vai akumulatoru, kuru nedrīkst izmest Eiropas Savienībā esošajās sadzīves atkritumu sistēmās. Sk. produkta dokumentācijā, kur ir norādīta konkrēta informācija par bateriju vai akumulatoru. Baterijas vai akumulatora marķējumā ir šis simbols, kas var ietvert burtus, kuri norāda kadmiju (Cd), svinu (Pb) vai dzīvsudrabu (Hg). Pēc ekspluatācijas laika beigām baterijas vai akumulatori jānodod piegādātājam vai specializētā bateriju savākšanas vietā. Sīkāku informāciju var iegūt vietnē: www.recyclethis.info.

NL Verwijderen van baterijen
Dit product bevat een batterij welke niet kan verwijdert worden via de gemeentelijke huisvuilscheiding in de Europese Gemeenschap. Gelieve de product documentatie te controleren voor specifieke batterij informatie. De batterijen met deze label kunnen volgende indictaies bevatten cadium (Cd), lood (Pb) of kwik (Hg). Voor correcte vorm van kringloop, geef je de producten terug aan jou locale leverancier of geef het af aan een gespecialiseerde verzamelpunt. Meer informatie vindt u op de volgende website: www.recyclethis.info.

NO Retur av batteri
Dette produkt inneholder et batteri som ikke kan kastes med usortert kommunalt søppel i den Europeiske Unionen. Se produktdokumentasjonen for spesifikk batteriinformasjon. Batteriet er merket med dette symbolet som kan inkludere symboler for å indikere at kadmium (Cd), bly (Pb), eller kvikksølv (Hg) forekommer. Returner batteriet til leverandøren din eller til et dedikert oppsamlingspunkt for korrekt gjenvinning. For mer informasjon se: www.recyclethis.info.

PL Pozbywanie się zużytych baterii
Ten produkt zawiera baterie, które w Unii Europejskiej mogą być usuwane tylko jako posegregowane odpady komunalne. Dokładne informacje dotyczące użytych baterii znajdują się w dokumentacji produktu. Baterie oznaczone tym symbolem mogą zawierać dodatkowe oznaczenia literowe wskazujące na zawartość kadmu (Cd), ołowiu (Pb) lub rtęci (Hg). Dla zapewnienia właściwej utylizacji, należy zwrócić baterie do dostawcy albo do wyznaczonego punktu zbiórki. Więcej informacji można znaleźć na stronie internetowej www.recyclethis.info.

PT Eliminação de Baterias
Este produto contêm uma bateria que não pode ser considerado lixo municipal na União Europeia. Consulte a documentação do produto para obter informação específica da bateria. A bateria é identificada por meio de este símbolo, que pode incluir a rotulação para indicar o cádmio (Cd), chumbo (Pb), ou o mercúrio (hg). Para uma reciclagem apropriada envie a bateria para o seu fornecedor ou para um ponto de recolha designado. Para mais informação veja: www.recyclethis.info.

RU Утилизация батарей
Согласно европейской директиве об отходах электрического и электронного оборудования, продукты, содержащие батареи, нельзя утилизировать как обычные отходы на территории ЕС. Более подробную информацию вы найдете в документации к продукту. На этом символе могут присутствовать буквы, которые означают, что батарея собержит кадмий (Cd), свинец (Pb) или ртуть (Hg). Для надлежащей утилизации по окончании срока эксплуатации пользователь должен возвратить батареи локальному поставщику или сдать в специальный пункт приема. Подробности можно найти на веб-сайте: www.recyclethis.info.

SK Zaobchádzanie s batériami
Tento produkt obsahuje batériu, s ktorou sa v Európskej únii nesmie nakladať ako s netriedeným komunálnym odpadom. Dokumentácia k produktu obsahuje špecifické informácie o batérii. Batéria je označená týmto symbolom, ktorý môže obsahovať písmená na označenie kadmia (Cd), olova (Pb), alebo ortuti (Hg). Na správnu recykláciu vráťte batériu vášmu lokálnemu dodávateľovi alebo na určené zberné miesto. Pre viac informácii pozrite: www.recyclethis.info.

SL Odlaganje baterij
Ta izdelek vsebuje baterijo, ki je v Evropski uniji ni dovoljeno odstranjevati kot nesortiran komunalni odpadek. Za posebne informacije o bateriji glejte dokumentacijo izdelka. Baterija je označena s tem simbolom, ki lahko vključuje napise, ki označujejo kadmij (Cd), svinec (Pb) ali živo srebro (Hg). Za ustrezno recikliranje baterijo vrnite dobavitelju ali jo odstranite na določenem zbirališču. Za več informacij obiščite spletno stran: www.recyclethis.info.

SV Kassering av batteri

Denna produkt innehåller ett batteri som inte får kastas i allmänna sophanteringssytem inom den europeiska unionen. Se produktdokumentationen för specifik batteriinformation. Batteriet är märkt med denna symbol, vilket kan innebära att det innehåller kadmium (Cd), bly (Pb) eller kvicksilver (Hg). För korrekt återvinning skall batteriet returneras till leverantören eller till en därför avsedd deponering. För mer information, se: www.recyclethis.info.

TR Pil Geri Dönüşümü

Bu ürün Avrupa Birliği genel atık sistemlerine atılmaması gereken pil içermektedir. Daha detaylı pil bilgisi için ürünün kataloğunu inceleyiniz. Bu sembolle işaretlenmiş piller Kadmiyum(Cd), Kurşun(Pb) ya da Civa(Hg) içerebilir. Doğru geri dönüşüm için ürünü yerel tedarikçinize geri veriniz ya da özel işaretlenmiş toplama noktlarına atınız. Daha fazla bilgi için: www.recyclethis.info.

Global Contacts

North America	905-294-6222
Latin America	+55 11 3614 1700
Europe, Middle East, Africa	+(34) 94 485 88 00
Asia	+86-21-2401-3208
India	+91 80 41314617

From GE Part Number 1604-0021-A1, GE Publication Number GEK-113574

10.3.1 UNINSTALL AND CLEAR FILES AND DATA

The unit can be decommissioned by turning off power to the unit and disconnecting the wires to it.

To clear files and settings in the UR:

1. On the UR front panel, navigate to **COMMANDS** ⇨⇩ **RELAY MAINTENANCE** ⇨⇩ **SERVICE COMMAND**, enter the value 20511, and press the **ENTER** key. The relay restarts and clears the UR.
2. Clear the flash memory using the **SETTINGS** ⇨ **PRODUCT SETUP** ⇨⇩ **CLEAR RELAY RECORDS** command.

To clear files and settings on the computer:

1. Uninstall the EnerVista UR Setup software.
2. Find and delete the following UR files:
   - .URS, .CID, and .ICD settings
   - .EVT event records
   - .CFG and .DAT COMTRADE

10.4.1 REPAIRS

The battery and modules inside the case can be replaced without return of the device to the factory. The firmware and software can be upgraded without return of the device to the factory.

Fuses in the power supply module are not field-replaceable.

For issues not solved by troubleshooting, the process to return the device to the factory for repair is as follows:

- Contact a GE Grid Solutions Technical Support Center. Contact information is found in the first chapter.
- Obtain a Return Materials Authorization (RMA) number from the Technical Support Center.
- Verify that the RMA and Commercial Invoice received have the correct information.
- Tightly pack the unit in a box with bubble wrap, foam material, or styrofoam inserts or packaging peanuts to cushion the item(s). You may also use double boxing whereby you place the box in a larger box that contains at least 5 cm of cushioning material.
- Ship the unit by courier or freight forwarder, along with the Commercial Invoice and RMA, to the factory.

  GE GRID SOLUTIONS
  650 MARKLAND STREET
  MARKHAM, ONTARIO
  CANADA L6C 0M1

  ATTN: SERVICE DEPT.

  RMA# : _____

  Customers are responsible for shipping costs to the factory, regardless of whether the unit is under warranty.
- Fax a copy of the shipping information to the GE Grid Solutions service department in Canada at +1 905 927 5098.

Use the detailed return procedure outlined at

https://www.gegridsolutions.com/multilin/support/ret_proc.htm

The current warranty and return information are outlined at

https://www.gegridsolutions.com/multilin/warranty.htm

10.5.1 STORAGE

Store the unit indoors in a cool, dry place. If possible, store in the original packaging. Follow the storage temperature range outlined in the Specifications.

NOTICE

To avoid deterioration of electrolytic capacitors, power up units that are stored in a de-energized state once per year, for one hour continuously.

10.6.1 DISPOSAL

Other than the battery, there are no special requirements for disposal of the unit at the end its service life. For customers located in the European Union, dispose of the battery as outlined earlier. To prevent non-intended use of the unit, remove the modules as outlined earlier, dismantle the unit, and recycle the metal when possible. See the UR Family Recycling and Disposal Instructions (GET-20096).

A FlexAnalog parameter is an analog parameter.

FlexAnalog items are also viewable in a web browser. Enter the IP address of the UR, access the **Device Information Menu** option, then the **FlexAnalog Parameter Listing** option. Entries displayed online depend on order code.

Table A–1: FLEXANALOG DATA ITEMS (Sheet 1 of 33)

DECIMAL ADDRESS	FLEXANALOG NAME	UNITS	DESCRIPTION
5824	Field RTD 1 Value	---	Field RTD 1 value
5825	Field RTD 2 Value	---	Field RTD 2 value
5826	Field RTD 3 Value	---	Field RTD 3 value
5827	Field RTD 4 Value	---	Field RTD 4 value
5828	Field RTD 5 Value	---	Field RTD 5 value
5829	Field RTD 6 Value	---	Field RTD 6 value
5830	Field RTD 7 Value	---	Field RTD 7 value
5831	Field RTD 8 Value	---	Field RTD 8 value
5832	Field TDR 1 Value	---	Field TDR 1 value
5834	Field TDR 2 Value	---	Field TDR 2 value
5836	Field TDR 3 Value	---	Field TDR 3 value
5838	Field TDR 4 Value	---	Field TDR 4 value
5840	Field TDR 5 Value	---	Field TDR 5 value
5842	Field TDR 6 Value	---	Field TDR 6 value
5844	Field TDR 7 Value	---	Field TDR 7 value
5846	Field TDR 8 Value	---	Field TDR 8 value
6144	SRC 1 Ia RMS	Amps	Source 1 phase A current RMS
6146	SRC 1 Ib RMS	Amps	Source 1 phase B current RMS
6148	SRC 1 Ic RMS	Amps	Source 1 phase C current RMS
6150	SRC 1 In RMS	Amps	Source 1 neutral current RMS
6152	SRC 1 Ia Mag	Amps	Source 1 phase A current magnitude
6154	SRC 1 Ia Angle	Degrees	Source 1 phase A current angle
6155	SRC 1 Ib Mag	Amps	Source 1 phase B current magnitude
6157	SRC 1 Ib Angle	Degrees	Source 1 phase B current angle
6158	SRC 1 Ic Mag	Amps	Source 1 phase C current magnitude
6160	SRC 1 Ic Angle	Degrees	Source 1 phase C current angle
6161	SRC 1 In Mag	Amps	Source 1 neutral current magnitude
6163	SRC 1 In Angle	Degrees	Source 1 neutral current angle
6164	SRC 1 Ig RMS	Amps	Source 1 ground current RMS
6166	SRC 1 Ig Mag	Amps	Source 1 ground current magnitude
6168	SRC 1 Ig Angle	Degrees	Source 1 ground current angle
6169	SRC 1 I_0 Mag	Amps	Source 1 zero-sequence current magnitude
6171	SRC 1 I_0 Angle	Degrees	Source 1 zero-sequence current angle
6172	SRC 1 I_1 Mag	Amps	Source 1 positive-sequence current magnitude
6174	SRC 1 I_1 Angle	Degrees	Source 1 positive-sequence current angle
6175	SRC 1 I_2 Mag	Amps	Source 1 negative-sequence current magnitude
6177	SRC 1 I_2 Angle	Degrees	Source 1 negative-sequence current angle
6178	SRC 1 Igd Mag	Amps	Source 1 differential ground current magnitude
6180	SRC 1 Igd Angle	Degrees	Source 1 differential ground current angle
6208	SRC 2 Ia RMS	Amps	Source 2 phase A current RMS

A

Table A–1: FLEXANALOG DATA ITEMS (Sheet 2 of 33)

DECIMAL ADDRESS	FLEXANALOG NAME	UNITS	DESCRIPTION
6210	SRC 2 Ib RMS	Amps	Source 2 phase B current RMS
6212	SRC 2 Ic RMS	Amps	Source 2 phase C current RMS
6214	SRC 2 In RMS	Amps	Source 2 neutral current RMS
6216	SRC 2 Ia Mag	Amps	Source 2 phase A current magnitude
6218	SRC 2 Ia Angle	Degrees	Source 2 phase A current angle
6219	SRC 2 Ib Mag	Amps	Source 2 phase B current magnitude
6221	SRC 2 Ib Angle	Degrees	Source 2 phase B current angle
6222	SRC 2 Ic Mag	Amps	Source 2 phase C current magnitude
6224	SRC 2 Ic Angle	Degrees	Source 2 phase C current angle
6225	SRC 2 In Mag	Amps	Source 2 neutral current magnitude
6227	SRC 2 In Angle	Degrees	Source 2 neutral current angle
6228	SRC 2 Ig RMS	Amps	Source 2 ground current RMS
6230	SRC 2 Ig Mag	Amps	Source 2 ground current magnitude
6232	SRC 2 Ig Angle	Degrees	Source 2 ground current angle
6233	SRC 2 I_0 Mag	Amps	Source 2 zero-sequence current magnitude
6235	SRC 2 I_0 Angle	Degrees	Source 2 zero-sequence current angle
6236	SRC 2 I_1 Mag	Amps	Source 2 positive-sequence current magnitude
6238	SRC 2 I_1 Angle	Degrees	Source 2 positive-sequence current angle
6239	SRC 2 I_2 Mag	Amps	Source 2 negative-sequence current magnitude
6241	SRC 2 I_2 Angle	Degrees	Source 2 negative-sequence current angle
6242	SRC 2 Igd Mag	Amps	Source 2 differential ground current magnitude
6244	SRC 2 Igd Angle	Degrees	Source 2 differential ground current angle
6272	SRC 3 Ia RMS	Amps	Source 3 phase A current RMS
6274	SRC 3 Ib RMS	Amps	Source 3 phase B current RMS
6276	SRC 3 Ic RMS	Amps	Source 3 phase C current RMS
6278	SRC 3 In RMS	Amps	Source 3 neutral current RMS
6280	SRC 3 Ia Mag	Amps	Source 3 phase A current magnitude
6282	SRC 3 Ia Angle	Degrees	Source 3 phase A current angle
6283	SRC 3 Ib Mag	Amps	Source 3 phase B current magnitude
6285	SRC 3 Ib Angle	Degrees	Source 3 phase B current angle
6286	SRC 3 Ic Mag	Amps	Source 3 phase C current magnitude
6288	SRC 3 Ic Angle	Degrees	Source 3 phase C current angle
6289	SRC 3 In Mag	Amps	Source 3 neutral current magnitude
6291	SRC 3 In Angle	Degrees	Source 3 neutral current angle
6292	SRC 3 Ig RMS	Amps	Source 3 ground current RMS
6294	SRC 3 Ig Mag	Amps	Source 3 ground current magnitude
6296	SRC 3 Ig Angle	Degrees	Source 3 ground current angle
6297	SRC 3 I_0 Mag	Amps	Source 3 zero-sequence current magnitude
6299	SRC 3 I_0 Angle	Degrees	Source 3 zero-sequence current angle
6300	SRC 3 I_1 Mag	Amps	Source 3 positive-sequence current magnitude
6302	SRC 3 I_1 Angle	Degrees	Source 3 positive-sequence current angle
6303	SRC 3 I_2 Mag	Amps	Source 3 negative-sequence current magnitude
6305	SRC 3 I_2 Angle	Degrees	Source 3 negative-sequence current angle
6306	SRC 3 Igd Mag	Amps	Source 3 differential ground current magnitude
6308	SRC 3 Igd Angle	Degrees	Source 3 differential ground current angle
6336	SRC 4 Ia RMS	Amps	Source 4 phase A current RMS
6338	SRC 4 Ib RMS	Amps	Source 4 phase B current RMS

Table A–1: FLEXANALOG DATA ITEMS (Sheet 3 of 33)

DECIMAL ADDRESS	FLEXANALOG NAME	UNITS	DESCRIPTION
6340	SRC 4 Ic RMS	Amps	Source 4 phase C current RMS
6342	SRC 4 In RMS	Amps	Source 4 neutral current RMS
6344	SRC 4 Ia Mag	Amps	Source 4 phase A current magnitude
6346	SRC 4 Ia Angle	Degrees	Source 4 phase A current angle
6347	SRC 4 Ib Mag	Amps	Source 4 phase B current magnitude
6349	SRC 4 Ib Angle	Degrees	Source 4 phase B current angle
6350	SRC 4 Ic Mag	Amps	Source 4 phase C current magnitude
6352	SRC 4 Ic Angle	Degrees	Source 4 phase C current angle
6353	SRC 4 In Mag	Amps	Source 4 neutral current magnitude
6355	SRC 4 In Angle	Degrees	Source 4 neutral current angle
6356	SRC 4 Ig RMS	Amps	Source 4 ground current RMS
6358	SRC 4 Ig Mag	Amps	Source 4 ground current magnitude
6360	SRC 4 Ig Angle	Degrees	Source 4 ground current angle
6361	SRC 4 I_0 Mag	Amps	Source 4 zero-sequence current magnitude
6363	SRC 4 I_0 Angle	Degrees	Source 4 zero-sequence current angle
6364	SRC 4 I_1 Mag	Amps	Source 4 positive-sequence current magnitude
6366	SRC 4 I_1 Angle	Degrees	Source 4 positive-sequence current angle
6367	SRC 4 I_2 Mag	Amps	Source 4 negative-sequence current magnitude
6369	SRC 4 I_2 Angle	Degrees	Source 4 negative-sequence current angle
6370	SRC 4 Igd Mag	Amps	Source 4 differential ground current magnitude
6372	SRC 4 Igd Angle	Degrees	Source 4 differential ground current angle
6400	SRC 5 Ia RMS	Amps	Source 5 phase A current RMS
6402	SRC 5 Ib RMS	Amps	Source 5 phase B current RMS
6404	SRC 5 Ic RMS	Amps	Source 5 phase C current RMS
6406	SRC 5 In RMS	Amps	Source 5 neutral current RMS
6408	SRC 5 Ia Mag	Amps	Source 5 phase A current magnitude
6410	SRC 5 Ia Angle	Degrees	Source 5 phase A current angle
6411	SRC 5 Ib Mag	Amps	Source 5 phase B current magnitude
6413	SRC 5 Ib Angle	Degrees	Source 5 phase B current angle
6414	SRC 5 Ic Mag	Amps	Source 5 phase C current magnitude
6416	SRC 5 Ic Angle	Degrees	Source 5 phase C current angle
6417	SRC 5 In Mag	Amps	Source 5 neutral current magnitude
6419	SRC 5 In Angle	Degrees	Source 5 neutral current angle
6420	SRC 5 Ig RMS	Amps	Source 5 ground current RMS
6422	SRC 5 Ig Mag	Amps	Source 5 ground current magnitude
6424	SRC 5 Ig Angle	Degrees	Source 5 ground current angle
6425	SRC 5 I_0 Mag	Amps	Source 5 zero-sequence current magnitude
6427	SRC 5 I_0 Angle	Degrees	Source 5 zero-sequence current angle
6428	SRC 5 I_1 Mag	Amps	Source 5 positive-sequence current magnitude
6430	SRC 5 I_1 Angle	Degrees	Source 5 positive-sequence current angle
6431	SRC 5 I_2 Mag	Amps	Source 5 negative-sequence current magnitude
6433	SRC 5 I_2 Angle	Degrees	Source 5 negative-sequence current angle
6434	SRC 5 Igd Mag	Amps	Source 5 differential ground current magnitude
6436	SRC 5 Igd Angle	Degrees	Source 5 differential ground current angle
6464	SRC 6 Ia RMS	Amps	Source 6 phase A current RMS
6466	SRC 6 Ib RMS	Amps	Source 6 phase B current RMS
6468	SRC 6 Ic RMS	Amps	Source 6 phase C current RMS

Table A–1: FLEXANALOG DATA ITEMS (Sheet 4 of 33)

DECIMAL ADDRESS	FLEXANALOG NAME	UNITS	DESCRIPTION
6470	SRC 6 In RMS	Amps	Source 6 neutral current RMS
6472	SRC 6 Ia Mag	Amps	Source 6 phase A current magnitude
6474	SRC 6 Ia Angle	Degrees	Source 6 phase A current angle
6475	SRC 6 Ib Mag	Amps	Source 6 phase B current magnitude
6477	SRC 6 Ib Angle	Degrees	Source 6 phase B current angle
6478	SRC 6 Ic Mag	Amps	Source 6 phase C current magnitude
6480	SRC 6 Ic Angle	Degrees	Source 6 phase C current angle
6481	SRC 6 In Mag	Amps	Source 6 neutral current magnitude
6483	SRC 6 In Angle	Degrees	Source 6 neutral current angle
6484	SRC 6 Ig RMS	Amps	Source 6 ground current RMS
6486	SRC 6 Ig Mag	Amps	Source 6 ground current magnitude
6488	SRC 6 Ig Angle	Degrees	Source 6 ground current angle
6489	SRC 6 I_0 Mag	Amps	Source 6 zero-sequence current magnitude
6491	SRC 6 I_0 Angle	Degrees	Source 6 zero-sequence current angle
6492	SRC 6 I_1 Mag	Amps	Source 6 positive-sequence current magnitude
6494	SRC 6 I_1 Angle	Degrees	Source 6 positive-sequence current angle
6495	SRC 6 I_2 Mag	Amps	Source 6 negative-sequence current magnitude
6497	SRC 6 I_2 Angle	Degrees	Source 6 negative-sequence current angle
6498	SRC 6 Igd Mag	Amps	Source 6 differential ground current magnitude
6500	SRC 6 Igd Angle	Degrees	Source 6 differential ground current angle
6656	SRC 1 Vag RMS	Volts	Source 1 phase AG voltage RMS
6658	SRC 1 Vbg RMS	Volts	Source 1 phase BG voltage RMS
6660	SRC 1 Vcg RMS	Volts	Source 1 phase CG voltage RMS
6662	SRC 1 Vag Mag	Volts	Source 1 phase AG voltage magnitude
6664	SRC 1 Vag Angle	Degrees	Source 1 phase AG voltage angle
6665	SRC 1 Vbg Mag	Volts	Source 1 phase BG voltage magnitude
6667	SRC 1 Vbg Angle	Degrees	Source 1 phase BG voltage angle
6668	SRC 1 Vcg Mag	Volts	Source 1 phase CG voltage magnitude
6670	SRC 1 Vcg Angle	Degrees	Source 1 phase CG voltage angle
6671	SRC 1 Vab RMS	Volts	Source 1 phase AB voltage RMS
6673	SRC 1 Vbc RMS	Volts	Source 1 phase BC voltage RMS
6675	SRC 1 Vca RMS	Volts	Source 1 phase CA voltage RMS
6677	SRC 1 Vab Mag	Volts	Source 1 phase AB voltage magnitude
6679	SRC 1 Vab Angle	Degrees	Source 1 phase AB voltage angle
6680	SRC 1 Vbc Mag	Volts	Source 1 phase BC voltage magnitude
6682	SRC 1 Vbc Angle	Degrees	Source 1 phase BC voltage angle
6683	SRC 1 Vca Mag	Volts	Source 1 phase CA voltage magnitude
6685	SRC 1 Vca Angle	Degrees	Source 1 phase CA voltage angle
6686	SRC 1 Vx RMS	Volts	Source 1 auxiliary voltage RMS
6688	SRC 1 Vx Mag	Volts	Source 1 auxiliary voltage magnitude
6690	SRC 1 Vx Angle	Degrees	Source 1 auxiliary voltage angle
6691	SRC 1 V_0 Mag	Volts	Source 1 zero-sequence voltage magnitude
6693	SRC 1 V_0 Angle	Degrees	Source 1 zero-sequence voltage angle
6694	SRC 1 V_1 Mag	Volts	Source 1 positive-sequence voltage magnitude
6696	SRC 1 V_1 Angle	Degrees	Source 1 positive-sequence voltage angle
6697	SRC 1 V_2 Mag	Volts	Source 1 negative-sequence voltage magnitude
6699	SRC 1 V_2 Angle	Degrees	Source 1 negative-sequence voltage angle

Table A–1: FLEXANALOG DATA ITEMS (Sheet 5 of 33)

DECIMAL ADDRESS	FLEXANALOG NAME	UNITS	DESCRIPTION
6720	SRC 2 Vag RMS	Volts	Source 2 phase AG voltage RMS
6722	SRC 2 Vbg RMS	Volts	Source 2 phase BG voltage RMS
6724	SRC 2 Vcg RMS	Volts	Source 2 phase CG voltage RMS
6726	SRC 2 Vag Mag	Volts	Source 2 phase AG voltage magnitude
6728	SRC 2 Vag Angle	Degrees	Source 2 phase AG voltage angle
6729	SRC 2 Vbg Mag	Volts	Source 2 phase BG voltage magnitude
6731	SRC 2 Vbg Angle	Degrees	Source 2 phase BG voltage angle
6732	SRC 2 Vcg Mag	Volts	Source 2 phase CG voltage magnitude
6734	SRC 2 Vcg Angle	Degrees	Source 2 phase CG voltage angle
6735	SRC 2 Vab RMS	Volts	Source 2 phase AB voltage RMS
6737	SRC 2 Vbc RMS	Volts	Source 2 phase BC voltage RMS
6739	SRC 2 Vca RMS	Volts	Source 2 phase CA voltage RMS
6741	SRC 2 Vab Mag	Volts	Source 2 phase AB voltage magnitude
6743	SRC 2 Vab Angle	Degrees	Source 2 phase AB voltage angle
6744	SRC 2 Vbc Mag	Volts	Source 2 phase BC voltage magnitude
6746	SRC 2 Vbc Angle	Degrees	Source 2 phase BC voltage angle
6747	SRC 2 Vca Mag	Volts	Source 2 phase CA voltage magnitude
6749	SRC 2 Vca Angle	Degrees	Source 2 phase CA voltage angle
6750	SRC 2 Vx RMS	Volts	Source 2 auxiliary voltage RMS
6752	SRC 2 Vx Mag	Volts	Source 2 auxiliary voltage magnitude
6754	SRC 2 Vx Angle	Degrees	Source 2 auxiliary voltage angle
6755	SRC 2 V_0 Mag	Volts	Source 2 zero-sequence voltage magnitude
6757	SRC 2 V_0 Angle	Degrees	Source 2 zero-sequence voltage angle
6758	SRC 2 V_1 Mag	Volts	Source 2 positive-sequence voltage magnitude
6760	SRC 2 V_1 Angle	Degrees	Source 2 positive-sequence voltage angle
6761	SRC 2 V_2 Mag	Volts	Source 2 negative-sequence voltage magnitude
6763	SRC 2 V_2 Angle	Degrees	Source 2 negative-sequence voltage angle
6784	SRC 3 Vag RMS	Volts	Source 3 phase AG voltage RMS
6786	SRC 3 Vbg RMS	Volts	Source 3 phase BG voltage RMS
6788	SRC 3 Vcg RMS	Volts	Source 3 phase CG voltage RMS
6790	SRC 3 Vag Mag	Volts	Source 3 phase AG voltage magnitude
6792	SRC 3 Vag Angle	Degrees	Source 3 phase AG voltage angle
6793	SRC 3 Vbg Mag	Volts	Source 3 phase BG voltage magnitude
6795	SRC 3 Vbg Angle	Degrees	Source 3 phase BG voltage angle
6796	SRC 3 Vcg Mag	Volts	Source 3 phase CG voltage magnitude
6798	SRC 3 Vcg Angle	Degrees	Source 3 phase CG voltage angle
6799	SRC 3 Vab RMS	Volts	Source 3 phase AB voltage RMS
6801	SRC 3 Vbc RMS	Volts	Source 3 phase BC voltage RMS
6803	SRC 3 Vca RMS	Volts	Source 3 phase CA voltage RMS
6805	SRC 3 Vab Mag	Volts	Source 3 phase AB voltage magnitude
6807	SRC 3 Vab Angle	Degrees	Source 3 phase AB voltage angle
6808	SRC 3 Vbc Mag	Volts	Source 3 phase BC voltage magnitude
6810	SRC 3 Vbc Angle	Degrees	Source 3 phase BC voltage angle
6811	SRC 3 Vca Mag	Volts	Source 3 phase CA voltage magnitude
6813	SRC 3 Vca Angle	Degrees	Source 3 phase CA voltage angle
6814	SRC 3 Vx RMS	Volts	Source 3 auxiliary voltage RMS
6816	SRC 3 Vx Mag	Volts	Source 3 auxiliary voltage magnitude

A

Table A–1: FLEXANALOG DATA ITEMS (Sheet 6 of 33)

DECIMAL ADDRESS	FLEXANALOG NAME	UNITS	DESCRIPTION
6818	SRC 3 Vx Angle	Degrees	Source 3 auxiliary voltage angle
6819	SRC 3 V_0 Mag	Volts	Source 3 zero-sequence voltage magnitude
6821	SRC 3 V_0 Angle	Degrees	Source 3 zero-sequence voltage angle
6822	SRC 3 V_1 Mag	Volts	Source 3 positive-sequence voltage magnitude
6824	SRC 3 V_1 Angle	Degrees	Source 3 positive-sequence voltage angle
6825	SRC 3 V_2 Mag	Volts	Source 3 negative-sequence voltage magnitude
6827	SRC 3 V_2 Angle	Degrees	Source 3 negative-sequence voltage angle
6848	SRC 4 Vag RMS	Volts	Source 4 phase AG voltage RMS
6850	SRC 4 Vbg RMS	Volts	Source 4 phase BG voltage RMS
6852	SRC 4 Vcg RMS	Volts	Source 4 phase CG voltage RMS
6854	SRC 4 Vag Mag	Volts	Source 4 phase AG voltage magnitude
6856	SRC 4 Vag Angle	Degrees	Source 4 phase AG voltage angle
6857	SRC 4 Vbg Mag	Volts	Source 4 phase BG voltage magnitude
6859	SRC 4 Vbg Angle	Degrees	Source 4 phase BG voltage angle
6860	SRC 4 Vcg Mag	Volts	Source 4 phase CG voltage magnitude
6862	SRC 4 Vcg Angle	Degrees	Source 4 phase CG voltage angle
6863	SRC 4 Vab RMS	Volts	Source 4 phase AB voltage RMS
6865	SRC 4 Vbc RMS	Volts	Source 4 phase BC voltage RMS
6867	SRC 4 Vca RMS	Volts	Source 4 phase CA voltage RMS
6869	SRC 4 Vab Mag	Volts	Source 4 phase AB voltage magnitude
6871	SRC 4 Vab Angle	Degrees	Source 4 phase AB voltage angle
6872	SRC 4 Vbc Mag	Volts	Source 4 phase BC voltage magnitude
6874	SRC 4 Vbc Angle	Degrees	Source 4 phase BC voltage angle
6875	SRC 4 Vca Mag	Volts	Source 4 phase CA voltage magnitude
6877	SRC 4 Vca Angle	Degrees	Source 4 phase CA voltage angle
6878	SRC 4 Vx RMS	Volts	Source 4 auxiliary voltage RMS
6880	SRC 4 Vx Mag	Volts	Source 4 auxiliary voltage magnitude
6882	SRC 4 Vx Angle	Degrees	Source 4 auxiliary voltage angle
6883	SRC 4 V_0 Mag	Volts	Source 4 zero-sequence voltage magnitude
6885	SRC 4 V_0 Angle	Degrees	Source 4 zero-sequence voltage angle
6886	SRC 4 V_1 Mag	Volts	Source 4 positive-sequence voltage magnitude
6888	SRC 4 V_1 Angle	Degrees	Source 4 positive-sequence voltage angle
6889	SRC 4 V_2 Mag	Volts	Source 4 negative-sequence voltage magnitude
6891	SRC 4 V_2 Angle	Degrees	Source 4 negative-sequence voltage angle
6912	SRC 5 Vag RMS	Volts	Source 5 phase AG voltage RMS
6914	SRC 5 Vbg RMS	Volts	Source 5 phase BG voltage RMS
6916	SRC 5 Vcg RMS	Volts	Source 5 phase CG voltage RMS
6918	SRC 5 Vag Mag	Volts	Source 5 phase AG voltage magnitude
6920	SRC 5 Vag Angle	Degrees	Source 5 phase AG voltage angle
6921	SRC 5 Vbg Mag	Volts	Source 5 phase BG voltage magnitude
6923	SRC 5 Vbg Angle	Degrees	Source 5 phase BG voltage angle
6924	SRC 5 Vcg Mag	Volts	Source 5 phase CG voltage magnitude
6926	SRC 5 Vcg Angle	Degrees	Source 5 phase CG voltage angle
6927	SRC 5 Vab RMS	Volts	Source 5 phase AB voltage RMS
6929	SRC 5 Vbc RMS	Volts	Source 5 phase BC voltage RMS
6931	SRC 5 Vca RMS	Volts	Source 5 phase CA voltage RMS
6933	SRC 5 Vab Mag	Volts	Source 5 phase AB voltage magnitude

Table A–1: FLEXANALOG DATA ITEMS (Sheet 7 of 33)

DECIMAL ADDRESS	FLEXANALOG NAME	UNITS	DESCRIPTION
6935	SRC 5 Vab Angle	Degrees	Source 5 phase AB voltage angle
6936	SRC 5 Vbc Mag	Volts	Source 5 phase BC voltage magnitude
6938	SRC 5 Vbc Angle	Degrees	Source 5 phase BC voltage angle
6939	SRC 5 Vca Mag	Volts	Source 5 phase CA voltage magnitude
6941	SRC 5 Vca Angle	Degrees	Source 5 phase CA voltage angle
6942	SRC 5 Vx RMS	Volts	Source 5 auxiliary voltage RMS
6944	SRC 5 Vx Mag	Volts	Source 5 auxiliary voltage magnitude
6946	SRC 5 Vx Angle	Degrees	Source 5 auxiliary voltage angle
6947	SRC 5 V_0 Mag	Volts	Source 5 zero-sequence voltage magnitude
6949	SRC 5 V_0 Angle	Degrees	Source 5 zero-sequence voltage angle
6950	SRC 5 V_1 Mag	Volts	Source 5 positive-sequence voltage magnitude
6952	SRC 5 V_1 Angle	Degrees	Source 5 positive-sequence voltage angle
6953	SRC 5 V_2 Mag	Volts	Source 5 negative-sequence voltage magnitude
6955	SRC 5 V_2 Angle	Degrees	Source 5 negative-sequence voltage angle
6976	SRC 6 Vag RMS	Volts	Source 6 phase AG voltage RMS
6978	SRC 6 Vbg RMS	Volts	Source 6 phase BG voltage RMS
6980	SRC 6 Vcg RMS	Volts	Source 6 phase CG voltage RMS
6982	SRC 6 Vag Mag	Volts	Source 6 phase AG voltage magnitude
6984	SRC 6 Vag Angle	Degrees	Source 6 phase AG voltage angle
6985	SRC 6 Vbg Mag	Volts	Source 6 phase BG voltage magnitude
6987	SRC 6 Vbg Angle	Degrees	Source 6 phase BG voltage angle
6988	SRC 6 Vcg Mag	Volts	Source 6 phase CG voltage magnitude
6990	SRC 6 Vcg Angle	Degrees	Source 6 phase CG voltage angle
6991	SRC 6 Vab RMS	Volts	Source 6 phase AB voltage RMS
6993	SRC 6 Vbc RMS	Volts	Source 6 phase BC voltage RMS
6995	SRC 6 Vca RMS	Volts	Source 6 phase CA voltage RMS
6997	SRC 6 Vab Mag	Volts	Source 6 phase AB voltage magnitude
6999	SRC 6 Vab Angle	Degrees	Source 6 phase AB voltage angle
7000	SRC 6 Vbc Mag	Volts	Source 6 phase BC voltage magnitude
7002	SRC 6 Vbc Angle	Degrees	Source 6 phase BC voltage angle
7003	SRC 6 Vca Mag	Volts	Source 6 phase CA voltage magnitude
7005	SRC 6 Vca Angle	Degrees	Source 6 phase CA voltage angle
7006	SRC 6 Vx RMS	Volts	Source 6 auxiliary voltage RMS
7008	SRC 6 Vx Mag	Volts	Source 6 auxiliary voltage magnitude
7010	SRC 6 Vx Angle	Degrees	Source 6 auxiliary voltage angle
7011	SRC 6 V_0 Mag	Volts	Source 6 zero-sequence voltage magnitude
7013	SRC 6 V_0 Angle	Degrees	Source 6 zero-sequence voltage angle
7014	SRC 6 V_1 Mag	Volts	Source 6 positive-sequence voltage magnitude
7016	SRC 6 V_1 Angle	Degrees	Source 6 positive-sequence voltage angle
7017	SRC 6 V_2 Mag	Volts	Source 6 negative-sequence voltage magnitude
7019	SRC 6 V_2 Angle	Degrees	Source 6 negative-sequence voltage angle
7168	SRC 1 P	Watts	Source 1 three-phase real power
7170	SRC 1 Pa	Watts	Source 1 phase A real power
7172	SRC 1 Pb	Watts	Source 1 phase B real power
7174	SRC 1 Pc	Watts	Source 1 phase C real power
7176	SRC 1 Q	Vars	Source 1 three-phase reactive power
7178	SRC 1 Qa	Vars	Source 1 phase A reactive power

A

Table A–1: FLEXANALOG DATA ITEMS (Sheet 8 of 33)

DECIMAL ADDRESS	FLEXANALOG NAME	UNITS	DESCRIPTION
7180	SRC 1 Qb	Vars	Source 1 phase B reactive power
7182	SRC 1 Qc	Vars	Source 1 phase C reactive power
7184	SRC 1 S	VA	Source 1 three-phase apparent power
7186	SRC 1 Sa	VA	Source 1 phase A apparent power
7188	SRC 1 Sb	VA	Source 1 phase B apparent power
7190	SRC 1 Sc	VA	Source 1 phase C apparent power
7192	SRC 1 PF	---	Source 1 three-phase power factor
7193	SRC 1 Phase A PF	---	Source 1 phase A power factor
7194	SRC 1 Phase B PF	---	Source 1 phase B power factor
7195	SRC 1 Phase C PF	---	Source 1 phase C power factor
7200	SRC 2 P	Watts	Source 2 three-phase real power
7202	SRC 2 Pa	Watts	Source 2 phase A real power
7204	SRC 2 Pb	Watts	Source 2 phase B real power
7206	SRC 2 Pc	Watts	Source 2 phase C real power
7208	SRC 2 Q	Vars	Source 2 three-phase reactive power
7210	SRC 2 Qa	Vars	Source 2 phase A reactive power
7212	SRC 2 Qb	Vars	Source 2 phase B reactive power
7214	SRC 2 Qc	Vars	Source 2 phase C reactive power
7216	SRC 2 S	VA	Source 2 three-phase apparent power
7218	SRC 2 Sa	VA	Source 2 phase A apparent power
7220	SRC 2 Sb	VA	Source 2 phase B apparent power
7222	SRC 2 Sc	VA	Source 2 phase C apparent power
7224	SRC 2 PF	---	Source 2 three-phase power factor
7225	SRC 2 Phase A PF	---	Source 2 phase A power factor
7226	SRC 2 Phase B PF	---	Source 2 phase B power factor
7227	SRC 2 Phase C PF	---	Source 2 phase C power factor
7232	SRC 3 P	Watts	Source 3 three-phase real power
7234	SRC 3 Pa	Watts	Source 3 phase A real power
7236	SRC 3 Pb	Watts	Source 3 phase B real power
7238	SRC 3 Pc	Watts	Source 3 phase C real power
7240	SRC 3 Q	Vars	Source 3 three-phase reactive power
7242	SRC 3 Qa	Vars	Source 3 phase A reactive power
7244	SRC 3 Qb	Vars	Source 3 phase B reactive power
7246	SRC 3 Qc	Vars	Source 3 phase C reactive power
7248	SRC 3 S	VA	Source 3 three-phase apparent power
7250	SRC 3 Sa	VA	Source 3 phase A apparent power
7252	SRC 3 Sb	VA	Source 3 phase B apparent power
7254	SRC 3 Sc	VA	Source 3 phase C apparent power
7256	SRC 3 PF	---	Source 3 three-phase power factor
7257	SRC 3 Phase A PF	---	Source 3 phase A power factor
7258	SRC 3 Phase B PF	---	Source 3 phase B power factor
7259	SRC 3 Phase C PF	---	Source 3 phase C power factor
7264	SRC 4 P	Watts	Source 4 three-phase real power
7266	SRC 4 Pa	Watts	Source 4 phase A real power
7268	SRC 4 Pb	Watts	Source 4 phase B real power
7270	SRC 4 Pc	Watts	Source 4 phase C real power
7272	SRC 4 Q	Vars	Source 4 three-phase reactive power

Table A–1: FLEXANALOG DATA ITEMS (Sheet 9 of 33)

DECIMAL ADDRESS	FLEXANALOG NAME	UNITS	DESCRIPTION
7274	SRC 4 Qa	Vars	Source 4 phase A reactive power
7276	SRC 4 Qb	Vars	Source 4 phase B reactive power
7278	SRC 4 Qc	Vars	Source 4 phase C reactive power
7280	SRC 4 S	VA	Source 4 three-phase apparent power
7282	SRC 4 Sa	VA	Source 4 phase A apparent power
7284	SRC 4 Sb	VA	Source 4 phase B apparent power
7286	SRC 4 Sc	VA	Source 4 phase C apparent power
7288	SRC 4 PF	---	Source 4 three-phase power factor
7289	SRC 4 Phase A PF	---	Source 4 phase A power factor
7290	SRC 4 Phase B PF	---	Source 4 phase B power factor
7291	SRC 4 Phase C PF	---	Source 4 phase C power factor
7296	SRC 5 P	Watts	Source 5 three-phase real power
7298	SRC 5 Pa	Watts	Source 5 phase A real power
7300	SRC 5 Pb	Watts	Source 5 phase B real power
7302	SRC 5 Pc	Watts	Source 5 phase C real power
7304	SRC 5 Q	Vars	Source 5 three-phase reactive power
7306	SRC 5 Qa	Vars	Source 5 phase A reactive power
7308	SRC 5 Qb	Vars	Source 5 phase B reactive power
7310	SRC 5 Qc	Vars	Source 5 phase C reactive power
7312	SRC 5 S	VA	Source 5 three-phase apparent power
7314	SRC 5 Sa	VA	Source 5 phase A apparent power
7316	SRC 5 Sb	VA	Source 5 phase B apparent power
7318	SRC 5 Sc	VA	Source 5 phase C apparent power
7320	SRC 5 PF	---	Source 5 three-phase power factor
7321	SRC 5 Phase A PF	---	Source 5 phase A power factor
7322	SRC 5 Phase B PF	---	Source 5 phase B power factor
7323	SRC 5 Phase C PF	---	Source 5 phase C power factor
7328	SRC 6 P	Watts	Source 6 three-phase real power
7330	SRC 6 Pa	Watts	Source 6 phase A real power
7332	SRC 6 Pb	Watts	Source 6 phase B real power
7334	SRC 6 Pc	Watts	Source 6 phase C real power
7336	SRC 6 Q	Vars	Source 6 three-phase reactive power
7338	SRC 6 Qa	Vars	Source 6 phase A reactive power
7340	SRC 6 Qb	Vars	Source 6 phase B reactive power
7342	SRC 6 Qc	Vars	Source 6 phase C reactive power
7344	SRC 6 S	VA	Source 6 three-phase apparent power
7346	SRC 6 Sa	VA	Source 6 phase A apparent power
7348	SRC 6 Sb	VA	Source 6 phase B apparent power
7350	SRC 6 Sc	VA	Source 6 phase C apparent power
7352	SRC 6 PF	---	Source 6 three-phase power factor
7353	SRC 6 Phase A PF	---	Source 6 phase A power factor
7354	SRC 6 Phase B PF	---	Source 6 phase B power factor
7355	SRC 6 Phase C PF	---	Source 6 phase C power factor
7552	SRC 1 Frequency	Hz	Source 1 frequency
7554	SRC 2 Frequency	Hz	Source 2 frequency
7556	SRC 3 Frequency	Hz	Source 3 frequency
7558	SRC 4 Frequency	Hz	Source 4 frequency

A

Table A–1: FLEXANALOG DATA ITEMS (Sheet 10 of 33)

DECIMAL ADDRESS	FLEXANALOG NAME	UNITS	DESCRIPTION
7560	SRC 5 Frequency	Hz	Source 5 frequency
7562	SRC 6 Frequency	Hz	Source 6 frequency
8064	SRC 1 Va THD	%	Source 1 phase A voltage total harmonic distortion (THD)
8065	SRC 1 Va Harm[2]	%	Source 1 phase A voltage second harmonic
8066	SRC 1 Va Harm[3]	%	Source 1 phase A voltage third harmonic
8067	SRC 1 Va Harm[4]	%	Source 1 phase A voltage fourth harmonic
8068	SRC 1 Va Harm[5]	%	Source 1 phase A voltage fifth harmonic
8069	SRC 1 Va Harm[6]	%	Source 1 phase A voltage sixth harmonic
8070	SRC 1 Va Harm[7]	%	Source 1 phase A voltage seventh harmonic
8071	SRC 1 Va Harm[8]	%	Source 1 phase A voltage eighth harmonic
8072	SRC 1 Va Harm[9]	%	Source 1 phase A voltage ninth harmonic
8073	SRC 1 Va Harm[10]	%	Source 1 phase A voltage tenth harmonic
8074	SRC 1 Va Harm[11]	%	Source 1 phase A voltage eleventh harmonic
8075	SRC 1 Va Harm[12]	%	Source 1 phase A voltage twelfth harmonic
8076	SRC 1 Va Harm[13]	%	Source 1 phase A voltage thirteenth harmonic
8077	SRC 1 Va Harm[14]	%	Source 1 phase A voltage fourteenth harmonic
8078	SRC 1 Va Harm[15]	%	Source 1 phase A voltage fifteenth harmonic
8079	SRC 1 Va Harm[16]	%	Source 1 phase A voltage sixteenth harmonic
8080	SRC 1 Va Harm[17]	%	Source 1 phase A voltage seventeenth harmonic
8081	SRC 1 Va Harm[18]	%	Source 1 phase A voltage eighteenth harmonic
8082	SRC 1 Va Harm[19]	%	Source 1 phase A voltage nineteenth harmonic
8083	SRC 1 Va Harm[20]	%	Source 1 phase A voltage twentieth harmonic
8084	SRC 1 Va Harm[21]	%	Source 1 phase A voltage twenty-first harmonic
8085	SRC 1 Va Harm[22]	%	Source 1 phase A voltage twenty-second harmonic
8086	SRC 1 Va Harm[23]	%	Source 1 phase A voltage twenty-third harmonic
8087	SRC 1 Va Harm[24]	%	Source 1 phase A voltage twenty-fourth harmonic
8088	SRC 1 Va Harm[25]	%	Source 1 phase A voltage twenty-fifth harmonic
8089	SRC 1 Vb THD	%	Source 1 phase B voltage total harmonic distortion (THD)
8090	SRC 1 Vb Harm[2]	%	Source 1 phase B voltage second harmonic
8091	SRC 1 Vb Harm[3]	%	Source 1 phase B voltage third harmonic
8092	SRC 1 Vb Harm[4]	%	Source 1 phase B voltage fourth harmonic
8093	SRC 1 Vb Harm[5]	%	Source 1 phase B voltage fifth harmonic
8094	SRC 1 Vb Harm[6]	%	Source 1 phase B voltage sixth harmonic
8095	SRC 1 Vb Harm[7]	%	Source 1 phase B voltage seventh harmonic
8096	SRC 1 Vb Harm[8]	%	Source 1 phase B voltage eighth harmonic
8097	SRC 1 Vb Harm[9]	%	Source 1 phase B voltage ninth harmonic
8098	SRC 1 Vb Harm[10]	%	Source 1 phase B voltage tenth harmonic
8099	SRC 1 Vb Harm[11]	%	Source 1 phase B voltage eleventh harmonic
8100	SRC 1 Vb Harm[12]	%	Source 1 phase B voltage twelfth harmonic
8101	SRC 1 Vb Harm[13]	%	Source 1 phase B voltage thirteenth harmonic
8102	SRC 1 Vb Harm[14]	%	Source 1 phase B voltage fourteenth harmonic
8103	SRC 1 Vb Harm[15]	%	Source 1 phase B voltage fifteenth harmonic
8104	SRC 1 Vb Harm[16]	%	Source 1 phase B voltage sixteenth harmonic
8105	SRC 1 Vb Harm[17]	%	Source 1 phase B voltage seventeenth harmonic
8106	SRC 1 Vb Harm[18]	%	Source 1 phase B voltage eighteenth harmonic
8107	SRC 1 Vb Harm[19]	%	Source 1 phase B voltage nineteenth harmonic
8108	SRC 1 Vb Harm[20]	%	Source 1 phase B voltage twentieth harmonic

Table A–1: FLEXANALOG DATA ITEMS (Sheet 11 of 33)

DECIMAL ADDRESS	FLEXANALOG NAME	UNITS	DESCRIPTION
8109	SRC 1 Vb Harm[21]	%	Source 1 phase B voltage twenty-first harmonic
8110	SRC 1 Vb Harm[22]	%	Source 1 phase B voltage twenty-second harmonic
8111	SRC 1 Vb Harm[23]	%	Source 1 phase B voltage twenty-third harmonic
8112	SRC 1 Vb Harm[24]	%	Source 1 phase B voltage twenty-fourth harmonic
8113	SRC 1 Vb Harm[25]	%	Source 1 phase B voltage twenty-fifth harmonic
8114	SRC 1 Vc THD	%	Source 1 phase C voltage total harmonic distortion (THD)
8115	SRC 1 Vc Harm[2]	%	Source 1 phase C voltage second harmonic
8116	SRC 1 Vc Harm[3]	%	Source 1 phase C voltage third harmonic
8117	SRC 1 Vc Harm[4]	%	Source 1 phase C voltage fourth harmonic
8118	SRC 1 Vc Harm[5]	%	Source 1 phase C voltage fifth harmonic
8119	SRC 1 Vc Harm[6]	%	Source 1 phase C voltage sixth harmonic
8120	SRC 1 Vc Harm[7]	%	Source 1 phase C voltage seventh harmonic
8121	SRC 1 Vc Harm[8]	%	Source 1 phase C voltage eighth harmonic
8122	SRC 1 Vc Harm[9]	%	Source 1 phase C voltage ninth harmonic
8123	SRC 1 Vc Harm[10]	%	Source 1 phase C voltage tenth harmonic
8124	SRC 1 Vc Harm[11]	%	Source 1 phase C voltage eleventh harmonic
8125	SRC 1 Vc Harm[12]	%	Source 1 phase C voltage twelfth harmonic
8126	SRC 1 Vc Harm[13]	%	Source 1 phase C voltage thirteenth harmonic
8127	SRC 1 Vc Harm[14]	%	Source 1 phase C voltage fourteenth harmonic
8128	SRC 1 Vc Harm[15]	%	Source 1 phase C voltage fifteenth harmonic
8129	SRC 1 Vc Harm[16]	%	Source 1 phase C voltage sixteenth harmonic
8130	SRC 1 Vc Harm[17]	%	Source 1 phase C voltage seventeenth harmonic
8131	SRC 1 Vc Harm[18]	%	Source 1 phase C voltage eighteenth harmonic
8132	SRC 1 Vc Harm[19]	%	Source 1 phase C voltage nineteenth harmonic
8133	SRC 1 Vc Harm[20]	%	Source 1 phase C voltage twentieth harmonic
8134	SRC 1 Vc Harm[21]	%	Source 1 phase C voltage twenty-first harmonic
8135	SRC 1 Vc Harm[22]	%	Source 1 phase C voltage twenty-second harmonic
8136	SRC 1 Vc Harm[23]	%	Source 1 phase C voltage twenty-third harmonic
8137	SRC 1 Vc Harm[24]	%	Source 1 phase C voltage twenty-fourth harmonic
8138	SRC 1 Vc Harm[25]	%	Source 1 phase C voltage twenty-fifth harmonic
8139	SRC 2 Va THD	%	Source 2 phase A voltage total harmonic distortion (THD)
8140	SRC 2 Va Harm[2]	%	Source 2 phase A voltage second harmonic
8141	SRC 2 Va Harm[3]	%	Source 2 phase A voltage third harmonic
8142	SRC 2 Va Harm[4]	%	Source 2 phase A voltage fourth harmonic
8143	SRC 2 Va Harm[5]	%	Source 2 phase A voltage fifth harmonic
8144	SRC 2 Va Harm[6]	%	Source 2 phase A voltage sixth harmonic
8145	SRC 2 Va Harm[7]	%	Source 2 phase A voltage seventh harmonic
8146	SRC 2 Va Harm[8]	%	Source 2 phase A voltage eighth harmonic
8147	SRC 2 Va Harm[9]	%	Source 2 phase A voltage ninth harmonic
8148	SRC 2 Va Harm[10]	%	Source 2 phase A voltage tenth harmonic
8149	SRC 2 Va Harm[11]	%	Source 2 phase A voltage eleventh harmonic
8150	SRC 2 Va Harm[12]	%	Source 2 phase A voltage twelfth harmonic
8151	SRC 2 Va Harm[13]	%	Source 2 phase A voltage thirteenth harmonic
8152	SRC 2 Va Harm[14]	%	Source 2 phase A voltage fourteenth harmonic
8153	SRC 2 Va Harm[15]	%	Source 2 phase A voltage fifteenth harmonic
8154	SRC 2 Va Harm[16]	%	Source 2 phase A voltage sixteenth harmonic
8155	SRC 2 Va Harm[17]	%	Source 2 phase A voltage seventeenth harmonic

Table A–1: FLEXANALOG DATA ITEMS (Sheet 12 of 33)

DECIMAL ADDRESS	FLEXANALOG NAME	UNITS	DESCRIPTION
8156	SRC 2 Va Harm[18]	%	Source 2 phase A voltage eighteenth harmonic
8157	SRC 2 Va Harm[19]	%	Source 2 phase A voltage nineteenth harmonic
8158	SRC 2 Va Harm[20]	%	Source 2 phase A voltage twentieth harmonic
8159	SRC 2 Va Harm[21]	%	Source 2 phase A voltage twenty-first harmonic
8160	SRC 2 Va Harm[22]	%	Source 2 phase A voltage twenty-second harmonic
8161	SRC 2 Va Harm[23]	%	Source 2 phase A voltage twenty-third harmonic
8162	SRC 2 Va Harm[24]	%	Source 2 phase A voltage twenty-fourth harmonic
8163	SRC 2 Va Harm[25]	%	Source 2 phase A voltage twenty-fifth harmonic
8164	SRC 2 Vb THD	%	Source 2 phase B voltage total harmonic distortion (THD)
8165	SRC 2 Vb Harm2]	%	Source 2 phase B voltage second harmonic
8166	SRC 2 Vb Harm[3]	%	Source 2 phase B voltage third harmonic
8167	SRC 2 Vb Harm[4]	%	Source 2 phase B voltage fourth harmonic
8168	SRC 2 Vb Harm[5]	%	Source 2 phase B voltage fifth harmonic
8169	SRC 2 Vb Harm[6]	%	Source 2 phase B voltage sixth harmonic
8170	SRC 2 Vb Harm[7]	%	Source 2 phase B voltage seventh harmonic
8171	SRC 2 Vb Harm[8]	%	Source 2 phase B voltage eighth harmonic
8172	SRC 2 Vb Harm[9]	%	Source 2 phase B voltage ninth harmonic
8173	SRC 2 Vb Harm[10]	%	Source 2 phase B voltage tenth harmonic
8174	SRC 2 Vb Harm[11]	%	Source 2 phase B voltage eleventh harmonic
8175	SRC 2 Vb Harm[12]	%	Source 2 phase B voltage twelfth harmonic
8176	SRC 2 Vb Harm[13]	%	Source 2 phase B voltage thirteenth harmonic
8177	SRC 2 Vb Harm[14]	%	Source 2 phase B voltage fourteenth harmonic
8178	SRC 2 Vb Harm[15]	%	Source 2 phase B voltage fifteenth harmonic
8179	SRC 2 Vb Harm[16]	%	Source 2 phase B voltage sixteenth harmonic
8180	SRC 2 Vb Harm[17]	%	Source 2 phase B voltage seventeenth harmonic
8181	SRC 2 Vb Harm[18]	%	Source 2 phase B voltage eighteenth harmonic
8182	SRC 2 Vb Harm[19]	%	Source 2 phase B voltage nineteenth harmonic
8183	SRC 2 Vb Harm[20]	%	Source 2 phase B voltage twentieth harmonic
8184	SRC 2 Vb Harm[21]	%	Source 2 phase B voltage twenty-first harmonic
8185	SRC 2 Vb Harm[22]	%	Source 2 phase B voltage twenty-second harmonic
8186	SRC 2 Vb Harm[23]	%	Source 2 phase B voltage twenty-third harmonic
8187	SRC 2 Vb Harm[24]	%	Source 2 phase B voltage twenty-fourth harmonic
8188	SRC 2 Vb Harm[25]	%	Source 2 phase B voltage twenty-fifth harmonic
8189	SRC 2 Vc THD	%	Source 2 phase C voltage total harmonic distortion (THD)
8190	SRC 2 Vc Harm[2]	%	Source 2 phase C voltage second harmonic
8191	SRC 2 Vc Harm[3]	%	Source 2 phase C voltage third harmonic
8192	SRC 2 Vc Harm[4]	%	Source 2 phase C voltage fourth harmonic
8193	SRC 2 Vc Harm[5]	%	Source 2 phase C voltage fifth harmonic
8194	SRC 2 Vc Harm[6]	%	Source 2 phase C voltage sixth harmonic
8195	SRC 2 Vc Harm[7]	%	Source 2 phase C voltage seventh harmonic
8196	SRC 2 Vc Harm[8]	%	Source 2 phase C voltage eighth harmonic
8197	SRC 2 Vc Harm[9]	%	Source 2 phase C voltage ninth harmonic
8198	SRC 2 Vc Harm[10]	%	Source 2 phase C voltage tenth harmonic
8199	SRC 2 Vc Harm[11]	%	Source 2 phase C voltage eleventh harmonic
8200	SRC 2 Vc Harm[12	%	Source 2 phase C voltage twelfth harmonic
8201	SRC 2 Vc Harm[13]	%	Source 2 phase C voltage thirteenth harmonic
8202	SRC 2 Vc Harm[14]	%	Source 2 phase C voltage fourteenth harmonic

Table A–1: FLEXANALOG DATA ITEMS (Sheet 13 of 33)

DECIMAL ADDRESS	FLEXANALOG NAME	UNITS	DESCRIPTION
8203	SRC 2 Vc Harm[15]	%	Source 2 phase C voltage fifteenth harmonic
8204	SRC 2 Vc Harm[16]	%	Source 2 phase C voltage sixteenth harmonic
8205	SRC 2 Vc Harm[17]	%	Source 2 phase C voltage seventeenth harmonic
8206	SRC 2 Vc Harm[18]	%	Source 2 phase C voltage eighteenth harmonic
8207	SRC 2 Vc Harm[19]	%	Source 2 phase C voltage nineteenth harmonic
8208	SRC 2 Vc Harm[20]	%	Source 2 phase C voltage twentieth harmonic
8209	SRC 2 Vc Harm[21]	%	Source 2 phase C voltage twenty-first harmonic
8210	SRC 2 Vc Harm[22]	%	Source 2 phase C voltage twenty-second harmonic
8211	SRC 2 Vc Harm[23]	%	Source 2 phase C voltage twenty-third harmonic
8212	SRC 2 Vc Harm[24]	%	Source 2 phase C voltage twenty-fourth harmonic
8213	SRC 2 Vc Harm[25]	%	Source 2 phase C voltage twenty-fifth harmonic
8214	SRC 3 Va THD	%	Source 3 phase A voltage total harmonic distortion (THD)
8215	SRC 3 Va Harm[2]	%	Source 3 phase A voltage second harmonic
8216	SRC 3 Va Harm[3]	%	Source 3 phase A voltage third harmonic
8217	SRC 3 Va Harm[4]	%	Source 3 phase A voltage fourth harmonic
8218	SRC 3 Va Harm[5]	%	Source 3 phase A voltage fifth harmonic
8219	SRC 3 Va Harm[6]	%	Source 3 phase A voltage sixth harmonic
8220	SRC 3 Va Harm[7]	%	Source 3 phase A voltage seventh harmonic
8221	SRC 3 Va Harm[8]	%	Source 3 phase A voltage eighth harmonic
8222	SRC 3 Va Harm[9]	%	Source 3 phase A voltage ninth harmonic
8223	SRC 3 Va Harm[10]	%	Source 3 phase A voltage tenth harmonic
8224	SRC 3 Va Harm[11]	%	Source 3 phase A voltage eleventh harmonic
8225	SRC 3 Va Harm[12]	%	Source 3 phase A voltage twelfth harmonic
8226	SRC 3 Va Harm[13]	%	Source 3 phase A voltage thirteenth harmonic
8227	SRC 3 Va Harm[14]	%	Source 3 phase A voltage fourteenth harmonic
8228	SRC 3 Va Harm[15]	%	Source 3 phase A voltage fifteenth harmonic
8229	SRC 3 Va Harm[16]	%	Source 3 phase A voltage sixteenth harmonic
8230	SRC 3 Va Harm[17]	%	Source 3 phase A voltage seventeenth harmonic
8231	SRC 3 Va Harm[18]	%	Source 3 phase A voltage eighteenth harmonic
8232	SRC 3 Va Harm[19]	%	Source 3 phase A voltage nineteenth harmonic
8233	SRC 3 Va Harm[20]	%	Source 3 phase A voltage twentieth harmonic
8234	SRC 3 Va Harm[21]	%	Source 3 phase A voltage twenty-first harmonic
8235	SRC 3 Va Harm[22]	%	Source 3 phase A voltage twenty-second harmonic
8236	SRC 3 Va Harm[23]	%	Source 3 phase A voltage twenty-third harmonic
8237	SRC 3 Va Harm[24]	%	Source 3 phase A voltage twenty-fourth harmonic
8238	SRC 3 Va Harm[25]	%	Source 3 phase A voltage twenty-fifth harmonic
8239	SRC 3 Vb THD	%	Source 3 phase B voltage total harmonic distortion (THD)
8240	SRC 3 Vb Harm[2]	%	Source 3 phase B voltage second harmonic
8241	SRC 3 Vb Harm[3]	%	Source 3 phase B voltage third harmonic
8242	SRC 3 Vb Harm[4]	%	Source 3 phase B voltage fourth harmonic
8243	SRC 3 Vb Harm[5]	%	Source 3 phase B voltage fifth harmonic
8244	SRC 3 Vb Harm[6]	%	Source 3 phase B voltage sixth harmonic
8245	SRC 3 Vb Harm[7]	%	Source 3 phase B voltage seventh harmonic
8246	SRC 3 Vb Harm[8]	%	Source 3 phase B voltage eighth harmonic
8247	SRC 3 Vb Harm[9]	%	Source 3 phase B voltage ninth harmonic
8248	SRC 3 Vb Harm[10]	%	Source 3 phase B voltage tenth harmonic
8249	SRC 3 Vb Harm[11]	%	Source 3 phase B voltage eleventh harmonic

A

Table A–1: FLEXANALOG DATA ITEMS (Sheet 14 of 33)

DECIMAL ADDRESS	FLEXANALOG NAME	UNITS	DESCRIPTION
8250	SRC 3 Vb Harm[12]	%	Source 3 phase B voltage twelfth harmonic
8251	SRC 3 Vb Harm[13]	%	Source 3 phase B voltage thirteenth harmonic
8252	SRC 3 Vb Harm[14]	%	Source 3 phase B voltage fourteenth harmonic
8253	SRC 3 Vb Harm[15]	%	Source 3 phase B voltage fifteenth harmonic
8254	SRC 3 Vb Harm[16]	%	Source 3 phase B voltage sixteenth harmonic
8255	SRC 3 Vb Harm[17]	%	Source 3 phase B voltage seventeenth harmonic
8256	SRC 3 Vb Harm[18]	%	Source 3 phase B voltage eighteenth harmonic
8257	SRC 3 Vb Harm[19]	%	Source 3 phase B voltage nineteenth harmonic
8258	SRC 3 Vb Harm[20]	%	Source 3 phase B voltage twentieth harmonic
8259	SRC 3 Vb Harm[21]	%	Source 3 phase B voltage twenty-first harmonic
8260	SRC 3 Vb Harm[22]	%	Source 3 phase B voltage twenty-second harmonic
8261	SRC 3 Vb Harm[23]	%	Source 3 phase B voltage twenty-third harmonic
8262	SRC 3 Vb Harm[24]	%	Source 3 phase B voltage twenty-fourth harmonic
8263	SRC 3 Vb Harm[25]	%	Source 3 phase B voltage twenty-fifth harmonic
8264	SRC 3 Vc THD	%	Source 3 phase C voltage total harmonic distortion (THD)
8265	SRC 3 Vc Harm[2]	%	Source 3 phase C voltage second harmonic
8266	SRC 3 Vc Harm[3]	%	Source 3 phase C voltage third harmonic
8267	SRC 3 Vc Harm[4]	%	Source 3 phase C voltage fourth harmonic
8268	SRC 3 Vc Harm[5]	%	Source 3 phase C voltage fifth harmonic
8269	SRC 3 Vc Harm[6]	%	Source 3 phase C voltage sixth harmonic
8270	SRC 3 Vc Harm[7]	%	Source 3 phase C voltage seventh harmonic
8271	SRC 3 Vc Harm[8]	%	Source 3 phase C voltage eighth harmonic
8272	SRC 3 Vc Harm[9]	%	Source 3 phase C voltage ninth harmonic
8273	SRC 3 Vc Harm[10]	%	Source 3 phase C voltage tenth harmonic
8274	SRC 3 Vc Harm[11]	%	Source 3 phase C voltage eleventh harmonic
8275	SRC 3 Vc Harm[12]	%	Source 3 phase C voltage twelfth harmonic
8276	SRC 3 Vc Harm[13]	%	Source 3 phase C voltage thirteenth harmonic
8277	SRC 3 Vc Harm[14]	%	Source 3 phase C voltage fourteenth harmonic
8278	SRC 3 Vc Harm[15]	%	Source 3 phase C voltage fifteenth harmonic
8279	SRC 3 Vc Harm[16]	%	Source 3 phase C voltage sixteenth harmonic
8280	SRC 3 Vc Harm[17]	%	Source 3 phase C voltage seventeenth harmonic
8281	SRC 3 Vc Harm[18]	%	Source 3 phase C voltage eighteenth harmonic
8282	SRC 3 Vc Harm[19]	%	Source 3 phase C voltage nineteenth harmonic
8283	SRC 3 Vc Harm[20]	%	Source 3 phase C voltage twentieth harmonic
8284	SRC 3 Vc Harm[21]	%	Source 3 phase C voltage twenty-first harmonic
8285	SRC 3 Vc Harm[22]	%	Source 3 phase C voltage twenty-second harmonic
8286	SRC 3 Vc Harm[23]	%	Source 3 phase C voltage twenty-third harmonic
8287	SRC 3 Vc Harm[24]	%	Source 3 phase C voltage twenty-fourth harmonic
8288	SRC 3 Vc Harm[25]	%	Source 3 phase C voltage twenty-fifth harmonic
8289	SRC 4 Va THD	%	Source 4 phase A voltage total harmonic distortion (THD)
8290	SRC 4 Va Harm[2]	%	Source 4 phase A voltage second harmonic
8291	SRC 4 Va Harm[3]	%	Source 4 phase A voltage third harmonic
8292	SRC 4 Va Harm[4]	%	Source 4 phase A voltage fourth harmonic
8293	SRC 4 Va Harm[5]	%	Source 4 phase A voltage fifth harmonic
8294	SRC 4 Va Harm[6]	%	Source 4 phase A voltage sixth harmonic
8295	SRC 4 Va Harm[7]	%	Source 4 phase A voltage seventh harmonic
8296	SRC 4 Va Harm[8]	%	Source 4 phase A voltage eighth harmonic

Table A–1: FLEXANALOG DATA ITEMS (Sheet 15 of 33)

DECIMAL ADDRESS	FLEXANALOG NAME	UNITS	DESCRIPTION
8297	SRC 4 Va Harm[9]	%	Source 4 phase A voltage ninth harmonic
8298	SRC 4 Va Harm[10]	%	Source 4 phase A voltage tenth harmonic
8299	SRC 4 Va Harm[11]	%	Source 4 phase A voltage eleventh harmonic
8300	SRC 4 Va Harm[12]	%	Source 4 phase A voltage twelfth harmonic
8301	SRC 4 Va Harm[13]	%	Source 4 phase A voltage thirteenth harmonic
8302	SRC 4 Va Harm[14]	%	Source 4 phase A voltage fourteenth harmonic
8303	SRC 4 Va Harm[15]	%	Source 4 phase A voltage fifteenth harmonic
8304	SRC 4 Va Harm[16]	%	Source 4 phase A voltage sixteenth harmonic
8305	SRC 4 Va Harm[17]	%	Source 4 phase A voltage seventeenth harmonic
8306	SRC 4 Va Harm[18]	%	Source 4 phase A voltage eighteenth harmonic
8307	SRC 4 Va Harm[19]	%	Source 4 phase A voltage nineteenth harmonic
8308	SRC 4 Va Harm[20]	%	Source 4 phase A voltage twentieth harmonic
8309	SRC 4 Va Harm[21]	%	Source 4 phase A voltage twenty-first harmonic
8310	SRC 4 Va Harm[22]	%	Source 4 phase A voltage twenty-second harmonic
8311	SRC 4 Va Harm[23]	%	Source 4 phase A voltage twenty-third harmonic
8312	SRC 4 Va Harm[24]	%	Source 4 phase A voltage twenty-fourth harmonic
8313	SRC 4 Va Harm[25]	%	Source 4 phase A voltage twenty-fifth harmonic
8314	SRC 4 Vb THD	%	Source 4 phase B voltage total harmonic distortion (THD)
8315	SRC 4 Vb Harm[2]	%	Source 4 phase B voltage second harmonic
8316	SRC 4 Vb Harm[3]	%	Source 4 phase B voltage third harmonic
8317	SRC 4 Vb Harm[4]	%	Source 4 phase B voltage fourth harmonic
8318	SRC 4 Vb Harm[5]	%	Source 4 phase B voltage fifth harmonic
8319	SRC 4 Vb Harm[6]	%	Source 4 phase B voltage sixth harmonic
8320	SRC 4 Vb Harm[7]	%	Source 4 phase B voltage seventh harmonic
8321	SRC 4 Vb Harm[8]	%	Source 4 phase B voltage eighth harmonic
8322	SRC 4 Vb Harm[9]	%	Source 4 phase B voltage ninth harmonic
8323	SRC 4 Vb Harm[10]	%	Source 4 phase B voltage tenth harmonic
8324	SRC 4 Vb Harm[11]	%	Source 4 phase B voltage eleventh harmonic
8325	SRC 4 Vb Harm[12]	%	Source 4 phase B voltage twelfth harmonic
8326	SRC 4 Vb Harm[13]	%	Source 4 phase B voltage thirteenth harmonic
8327	SRC 4 Vb Harm[14]	%	Source 4 phase B voltage fourteenth harmonic
8328	SRC 4 Vb Harm[15]	%	Source 4 phase B voltage fifteenth harmonic
8329	SRC 4 Vb Harm[16]	%	Source 4 phase B voltage sixteenth harmonic
8330	SRC 4 Vb Harm[17]	%	Source 4 phase B voltage seventeenth harmonic
8331	SRC 4 Vb Harm[18]	%	Source 4 phase B voltage eighteenth harmonic
8332	SRC 4 Vb Harm[19]	%	Source 4 phase B voltage nineteenth harmonic
8333	SRC 4 Vb Harm[20]	%	Source 4 phase B voltage twentieth harmonic
8334	SRC 4 Vb Harm[21]	%	Source 4 phase B voltage twenty-first harmonic
8335	SRC 4 Vb Harm[22]	%	Source 4 phase B voltage twenty-second harmonic
8336	SRC 4 Vb Harm[23]	%	Source 4 phase B voltage twenty-third harmonic
8337	SRC 4 Vb Harm[24]	%	Source 4 phase B voltage twenty-fourth harmonic
8338	SRC 4 Vb Harm[25]	%	Source 4 phase B voltage twenty-fifth harmonic
8339	SRC 4 Vc THD	%	Source 4 phase C voltage total harmonic distortion (THD)
8340	SRC 4 Vc Harm[2]	%	Source 4 phase C voltage second harmonic
8341	SRC 4 Vc Harm[3	%	Source 4 phase C voltage third harmonic
8342	SRC 4 Vc Harm[4]	%	Source 4 phase C voltage fourth harmonic
8343	SRC 4 Vc Harm[5]	%	Source 4 phase C voltage fifth harmonic

A

Table A–1: FLEXANALOG DATA ITEMS (Sheet 16 of 33)

DECIMAL ADDRESS	FLEXANALOG NAME	UNITS	DESCRIPTION
8344	SRC 4 Vc Harm[6]	%	Source 4 phase C voltage sixth harmonic
8345	SRC 4 Vc Harm[7]	%	Source 4 phase C voltage seventh harmonic
8346	SRC 4 Vc Harm[8]	%	Source 4 phase C voltage eighth harmonic
8347	SRC 4 Vc Harm[9]	%	Source 4 phase C voltage ninth harmonic
8348	SRC 4 Vc Harm[10]	%	Source 4 phase C voltage tenth harmonic
8349	SRC 4 Vc Harm[11]	%	Source 4 phase C voltage eleventh harmonic
8350	SRC 4 Vc Harm[12]	%	Source 4 phase C voltage twelfth harmonic
8351	SRC 4 Vc Harm[13]	%	Source 4 phase C voltage thirteenth harmonic
8352	SRC 4 Vc Harm[14]	%	Source 4 phase C voltage fourteenth harmonic
8353	SRC 4 Vc Harm[15]	%	Source 4 phase C voltage fifteenth harmonic
8354	SRC 4 Vc Harm[16]	%	Source 4 phase C voltage sixteenth harmonic
8355	SRC 4 Vc Harm[17]	%	Source 4 phase C voltage seventeenth harmonic
8356	SRC 4 Vc Harm[18]	%	Source 4 phase C voltage eighteenth harmonic
8357	SRC 4 Vc Harm[19]	%	Source 4 phase C voltage nineteenth harmonic
8358	SRC 4 Vc Harm[20]	%	Source 4 phase C voltage twentieth harmonic
8359	SRC 4 Vc Harm[21]	%	Source 4 phase C voltage twenty-first harmonic
8360	SRC 4 Vc Harm[22]	%	Source 4 phase C voltage twenty-second harmonic
8361	SRC 4 Vc Harm[23]	%	Source 4 phase C voltage twenty-third harmonic
8362	SRC 4 Vc Harm[24]	%	Source 4 phase C voltage twenty-fourth harmonic
8363	SRC 4 Vc Harm[25]	%	Source 4 phase C voltage twenty-fifth harmonic
8364	SRC 5 Va THD	%	Source 5 phase A voltage total harmonic distortion (THD)
8365	SRC 5 Va Harm[2]	%	Source 5 phase A voltage second harmonic
8366	SRC 5 Va Harm[3]	%	Source 5 phase A voltage third harmonic
8367	SRC 5 Va Harm[4]	%	Source 5 phase A voltage fourth harmonic
8368	SRC 5 Va Harm[5]	%	Source 5 phase A voltage fifth harmonic
8369	SRC 5 Va Harm[6]	%	Source 5 phase A voltage sixth harmonic
8370	SRC 5 Va Harm[7]	%	Source 5 phase A voltage seventh harmonic
8371	SRC 5 Va Harm[8]	%	Source 5 phase A voltage eighth harmonic
8372	SRC 5 Va Harm[9]	%	Source 5 phase A voltage ninth harmonic
8373	SRC 5 Va Harm[10]	%	Source 5 phase A voltage tenth harmonic
8374	SRC 5 Va Harm[11]	%	Source 5 phase A voltage eleventh harmonic
8375	SRC 5 Va Harm[12]	%	Source 5 phase A voltage twelfth harmonic
8376	SRC 5 Va Harm[13]	%	Source 5 phase A voltage thirteenth harmonic
8377	SRC 5 Va Harm[14]	%	Source 5 phase A voltage fourteenth harmonic
8378	SRC 5 Va Harm[15]	%	Source 5 phase A voltage fifteenth harmonic
8379	SRC 5 Va Harm[16]	%	Source 5 phase A voltage sixteenth harmonic
8380	SRC 5 Va Harm[17]	%	Source 5 phase A voltage seventeenth harmonic
8381	SRC 5 Va Harm[18]	%	Source 5 phase A voltage eighteenth harmonic
8382	SRC 5 Va Harm[19]	%	Source 5 phase A voltage nineteenth harmonic
8383	SRC 5 Va Harm[20]	%	Source 5 phase A voltage twentieth harmonic
8384	SRC 5 Va Harm[21]	%	Source 5 phase A voltage twenty-first harmonic
8385	SRC 5 Va Harm[22]	%	Source 5 phase A voltage twenty-second harmonic
8386	SRC 5 Va Harm[23]	%	Source 5 phase A voltage twenty-third harmonic
8387	SRC 5 Va Harm[24]	%	Source 5 phase A voltage twenty-fourth harmonic
8388	SRC 5 Va Harm[25]	%	Source 5 phase A voltage twenty-fifth harmonic
8389	SRC 5 Vb THD	%	Source 5 phase B voltage total harmonic distortion (THD)
8390	SRC 5 Vb Harm[2]	%	Source 5 phase B voltage second harmonic

Table A–1: FLEXANALOG DATA ITEMS (Sheet 17 of 33)

DECIMAL ADDRESS	FLEXANALOG NAME	UNITS	DESCRIPTION
8391	SRC 5 Vb Harm[3]	%	Source 5 phase B voltage third harmonic
8392	SRC 5 Vb Harm[4]	%	Source 5 phase B voltage fourth harmonic
8393	SRC 5 Vb Harm[5]	%	Source 5 phase B voltage fifth harmonic
8394	SRC 5 Vb Harm[6]	%	Source 5 phase B voltage sixth harmonic
8395	SRC 5 Vb Harm[7]	%	Source 5 phase B voltage seventh harmonic
8396	SRC 5 Vb Harm[8]	%	Source 5 phase B voltage eighth harmonic
8397	SRC 5 Vb Harm[9]	%	Source 5 phase B voltage ninth harmonic
8398	SRC 5 Vb Harm[10]	%	Source 5 phase B voltage tenth harmonic
8399	SRC 5 Vb Harm[11]	%	Source 5 phase B voltage eleventh harmonic
8400	SRC 5 Vb Harm[12]	%	Source 5 phase B voltage twelfth harmonic
8401	SRC 5 Vb Harm[13]	%	Source 5 phase B voltage thirteenth harmonic
8402	SRC 5 Vb Harm[14]	%	Source 5 phase B voltage fourteenth harmonic
8403	SRC 5 Vb Harm[15]	%	Source 5 phase B voltage fifteenth harmonic
8404	SRC 5 Vb Harm[16]	%	Source 5 phase B voltage sixteenth harmonic
8405	SRC 5 Vb Harm[17]	%	Source 5 phase B voltage seventeenth harmonic
8406	SRC 5 Vb Harm[18]	%	Source 5 phase B voltage eighteenth harmonic
8407	SRC 5 Vb Harm[19]	%	Source 5 phase B voltage nineteenth harmonic
8408	SRC 5 Vb Harm[20]	%	Source 5 phase B voltage twentieth harmonic
8409	SRC 5 Vb Harm[21]	%	Source 5 phase B voltage twenty-first harmonic
8410	SRC 5 Vb Harm[22]	%	Source 5 phase B voltage twenty-second harmonic
8411	SRC 5 Vb Harm[23]	%	Source 5 phase B voltage twenty-third harmonic
8412	SRC 5 Vb Harm[24]	%	Source 5 phase B voltage twenty-fourth harmonic
8413	SRC 5 Vb Harm[25]	%	Source 5 phase B voltage twenty-fifth harmonic
8414	SRC 5 Vc THD	%	Source 5 phase C voltage total harmonic distortion (THD)
8415	SRC 5 Vc Harm[2]	%	Source 5 phase C voltage second harmonic
8416	SRC 5 Vc Harm[3]	%	Source 5 phase C voltage third harmonic
8417	SRC 5 Vc Harm[4]	%	Source 5 phase C voltage fourth harmonic
8418	SRC 5 Vc Harm[5]	%	Source 5 phase C voltage fifth harmonic
8419	SRC 5 Vc Harm[6]	%	Source 5 phase C voltage sixth harmonic
8420	SRC 5 Vc Harm[7]	%	Source 5 phase C voltage seventh harmonic
8421	SRC 5 Vc Harm[8]	%	Source 5 phase C voltage eighth harmonic
8422	SRC 5 Vc Harm[9]	%	Source 5 phase C voltage ninth harmonic
8423	SRC 5 Vc Harm[10]	%	Source 5 phase C voltage tenth harmonic
8424	SRC 5 Vc Harm[11]	%	Source 5 phase C voltage eleventh harmonic
8425	SRC 5 Vc Harm[12]	%	Source 5 phase C voltage twelfth harmonic
8426	SRC 5 Vc Harm[13]	%	Source 5 phase C voltage thirteenth harmonic
8427	SRC 5 Vc Harm[14]	%	Source 5 phase C voltage fourteenth harmonic
8428	SRC 5 Vc Harm[15]	%	Source 5 phase C voltage fifteenth harmonic
8429	SRC 5 Vc Harm[16]	%	Source 5 phase C voltage sixteenth harmonic
8430	SRC 5 Vc Harm[17]	%	Source 5 phase C voltage seventeenth harmonic
8431	SRC 5 Vc Harm[18]	%	Source 5 phase C voltage eighteenth harmonic
8432	SRC 5 Vc Harm[19]	%	Source 5 phase C voltage nineteenth harmonic
8433	SRC 5 Vc Harm[20]	%	Source 5 phase C voltage twentieth harmonic
8434	SRC 5 Vc Harm[21]	%	Source 5 phase C voltage twenty-first harmonic
8435	SRC 5 Vc Harm[22]	%	Source 5 phase C voltage twenty-second harmonic
8436	SRC 5 Vc Harm[23]	%	Source 5 phase C voltage twenty-third harmonic
8437	SRC 5 Vc Harm[24]	%	Source 5 phase C voltage twenty-fourth harmonic

A

Table A–1: FLEXANALOG DATA ITEMS (Sheet 18 of 33)

DECIMAL ADDRESS	FLEXANALOG NAME	UNITS	DESCRIPTION
8438	SRC 5 Vc Harm[25]	%	Source 5 phase C voltage twenty-fifth harmonic
8439	SRC 6 Va THD	%	Source 6 phase A voltage total harmonic distortion (THD)
8440	SRC 6 Va Harm[2]	%	Source 6 phase A voltage second harmonic
8441	SRC 6 Va Harm[3]	%	Source 6 phase A voltage third harmonic
8442	SRC 6 Va Harm[4]	%	Source 6 phase A voltage fourth harmonic
8443	SRC 6 Va Harm[5]	%	Source 6 phase A voltage fifth harmonic
8444	SRC 6 Va Harm[6]	%	Source 6 phase A voltage sixth harmonic
8445	SRC 6 Va Harm[7]	%	Source 6 phase A voltage seventh harmonic
8446	SRC 6 Va Harm[8]	%	Source 6 phase A voltage eighth harmonic
8447	SRC 6 Va Harm[9]	%	Source 6 phase A voltage ninth harmonic
8448	SRC 6 Va Harm[10]	%	Source 6 phase A voltage tenth harmonic
8449	SRC 6 Va Harm[11]	%	Source 6 phase A voltage eleventh harmonic
8450	SRC 6 Va Harm[12]	%	Source 6 phase A voltage twelfth harmonic
8451	SRC 6 Va Harm[13]	%	Source 6 phase A voltage thirteenth harmonic
8452	SRC 6 Va Harm[14]	%	Source 6 phase A voltage fourteenth harmonic
8453	SRC 6 Va Harm[15]	%	Source 6 phase A voltage fifteenth harmonic
8454	SRC 6 Va Harm[16]	%	Source 6 phase A voltage sixteenth harmonic
8455	SRC 6 Va Harm[17]	%	Source 6 phase A voltage seventeenth harmonic
8456	SRC 6 Va Harm[18]	%	Source 6 phase A voltage eighteenth harmonic
8457	SRC 6 Va Harm[19]	%	Source 6 phase A voltage nineteenth harmonic
8458	SRC 6 Va Harm[20]	%	Source 6 phase A voltage twentieth harmonic
8459	SRC 6 Va Harm[21]	%	Source 6 phase A voltage twenty-first harmonic
8460	SRC 6 Va Harm[22]	%	Source 6 phase A voltage twenty-second harmonic
8461	SRC 6 Va Harm[23]	%	Source 6 phase A voltage twenty-third harmonic
8462	SRC 6 Va Harm[24]	%	Source 6 phase A voltage twenty-fourth harmonic
8463	SRC 6 Va Harm[25]	%	Source 6 phase A voltage twenty-fifth harmonic
8464	SRC 6 Vb THD	%	Source 6 phase B voltage total harmonic distortion (THD)
8465	SRC 6 Vb Harm[2]	%	Source 6 phase B voltage second harmonic
8466	SRC 6 Vb Harm[3]	%	Source 6 phase B voltage third harmonic
8467	SRC 6 Vb Harm[4]	%	Source 6 phase B voltage fourth harmonic
8468	SRC 6 Vb Harm[5]	%	Source 6 phase B voltage fifth harmonic
8469	SRC 6 Vb Harm[6]	%	Source 6 phase B voltage sixth harmonic
8470	SRC 6 Vb Harm[7]	%	Source 6 phase B voltage seventh harmonic
8471	SRC 6 Vb Harm[8]	%	Source 6 phase B voltage eighth harmonic
8472	SRC 6 Vb Harm[9]	%	Source 6 phase B voltage ninth harmonic
8473	SRC 6 Vb Harm[10]	%	Source 6 phase B voltage tenth harmonic
8474	SRC 6 Vb Harm[11]	%	Source 6 phase B voltage eleventh harmonic
8475	SRC 6 Vb Harm[12]	%	Source 6 phase B voltage twelfth harmonic
8476	SRC 6 Vb Harm[13]	%	Source 6 phase B voltage thirteenth harmonic
8477	SRC 6 Vb Harm[14]	%	Source 6 phase B voltage fourteenth harmonic
8478	SRC 6 Vb Harm[15]	%	Source 6 phase B voltage fifteenth harmonic
8479	SRC 6 Vb Harm[16]	%	Source 6 phase B voltage sixteenth harmonic
8480	SRC 6 Vb Harm[17]	%	Source 6 phase B voltage seventeenth harmonic
8481	SRC 6 Vb Harm[18]	%	Source 6 phase B voltage eighteenth harmonic
8482	SRC 6 Vb Harm[19]	%	Source 6 phase B voltage nineteenth harmonic
8483	SRC 6 Vb Harm[20]	%	Source 6 phase B voltage twentieth harmonic
8484	SRC 6 Vb Harm[21]	%	Source 6 phase B voltage twenty-first harmonic

Table A–1: FLEXANALOG DATA ITEMS (Sheet 19 of 33)

DECIMAL ADDRESS	FLEXANALOG NAME	UNITS	DESCRIPTION
8485	SRC 6 Vb Harm[22]	%	Source 6 phase B voltage twenty-second harmonic
8486	SRC 6 Vb Harm[23]	%	Source 6 phase B voltage twenty-third harmonic
8487	SRC 6 Vb Harm[24]	%	Source 6 phase B voltage twenty-fourth harmonic
8488	SRC 6 Vb Harm[25]	%	Source 6 phase B voltage twenty-fifth harmonic
8489	SRC 6 Vc THD	%	Source 6 phase C voltage total harmonic distortion (THD)
8490	SRC 6 Vc Harm[2]	%	Source 6 phase C voltage second harmonic
8491	SRC 6 Vc Harm[3]	%	Source 6 phase C voltage third harmonic
8492	SRC 6 Vc Harm[4]	%	Source 6 phase C voltage fourth harmonic
8493	SRC 6 Vc Harm[5]	%	Source 6 phase C voltage fifth harmonic
8494	SRC 6 Vc Harm[6]	%	Source 6 phase C voltage sixth harmonic
8495	SRC 6 Vc Harm[7]	%	Source 6 phase C voltage seventh harmonic
8496	SRC 6 Vc Harm[8]	%	Source 6 phase C voltage eighth harmonic
8497	SRC 6 Vc Harm[9]	%	Source 6 phase C voltage ninth harmonic
8498	SRC 6 Vc Harm[10]	%	Source 6 phase C voltage tenth harmonic
8499	SRC 6 Vc Harm[11]	%	Source 6 phase C voltage eleventh harmonic
8500	SRC 6 Vc Harm[12]	%	Source 6 phase C voltage twelfth harmonic
8501	SRC 6 Vc Harm[13]	%	Source 6 phase C voltage thirteenth harmonic
8502	SRC 6 Vc Harm[14]	%	Source 6 phase C voltage fourteenth harmonic
8503	SRC 6 Vc Harm[15]	%	Source 6 phase C voltage fifteenth harmonic
8504	SRC 6 Vc Harm[16]	%	Source 6 phase C voltage sixteenth harmonic
8505	SRC 6 Vc Harm[17]	%	Source 6 phase C voltage seventeenth harmonic
8506	SRC 6 Vc Harm[18]	%	Source 6 phase C voltage eighteenth harmonic
8507	SRC 6 Vc Harm[19]	%	Source 6 phase C voltage nineteenth harmonic
8508	SRC 6 Vc Harm[20]	%	Source 6 phase C voltage twentieth harmonic
8509	SRC 6 Vc Harm[21]	%	Source 6 phase C voltage twenty-first harmonic
8510	SRC 6 Vc Harm[22]	%	Source 6 phase C voltage twenty-second harmonic
8511	SRC 6 Vc Harm[23]	%	Source 6 phase C voltage twenty-third harmonic
8512	SRC 6 Vc Harm[24]	%	Source 6 phase C voltage twenty-fourth harmonic
8513	SRC 6 Vc Harm[25]	%	Source 6 phase C voltage twenty-fifth harmonic
10240	SRC 1 Ia THD	%	Source 1 phase A current total harmonic distortion
10241	SRC 1 Ia Harm[2]	%	Source 1 phase A current second harmonic
10242	SRC 1 Ia Harm[3]	%	Source 1 phase A current third harmonic
10243	SRC 1 Ia Harm[4]	%	Source 1 phase A current fourth harmonic
10244	SRC 1 Ia Harm[5]	%	Source 1 phase A current fifth harmonic
10245	SRC 1 Ia Harm[6]	%	Source 1 phase A current sixth harmonic
10246	SRC 1 Ia Harm[7]	%	Source 1 phase A current seventh harmonic
10247	SRC 1 Ia Harm[8]	%	Source 1 phase A current eighth harmonic
10248	SRC 1 Ia Harm[9]	%	Source 1 phase A current ninth harmonic
10249	SRC 1 Ia Harm[10]	%	Source 1 phase A current tenth harmonic
10250	SRC 1 Ia Harm[11]	%	Source 1 phase A current eleventh harmonic
10251	SRC 1 Ia Harm[12]	%	Source 1 phase A current twelfth harmonic
10252	SRC 1 Ia Harm[13]	%	Source 1 phase A current thirteenth harmonic
10253	SRC 1 Ia Harm[14]	%	Source 1 phase A current fourteenth harmonic
10254	SRC 1 Ia Harm[15]	%	Source 1 phase A current fifteenth harmonic
10255	SRC 1 Ia Harm[16]	%	Source 1 phase A current sixteenth harmonic
10256	SRC 1 Ia Harm[17]	%	Source 1 phase A current seventeenth harmonic
10257	SRC 1 Ia Harm[18]	%	Source 1 phase A current eighteenth harmonic

A

Table A–1: FLEXANALOG DATA ITEMS (Sheet 20 of 33)

DECIMAL ADDRESS	FLEXANALOG NAME	UNITS	DESCRIPTION
10258	SRC 1 Ia Harm[19]	%	Source 1 phase A current nineteenth harmonic
10259	SRC 1 Ia Harm[20]	%	Source 1 phase A current twentieth harmonic
10260	SRC 1 Ia Harm[21]	%	Source 1 phase A current twenty-first harmonic
10261	SRC 1 Ia Harm[22]	%	Source 1 phase A current twenty-second harmonic
10262	SRC 1 Ia Harm[23]	%	Source 1 phase A current twenty-third harmonic
10263	SRC 1 Ia Harm[24]	%	Source 1 phase A current twenty-fourth harmonic
10264	SRC 1 Ia Harm[25]	%	Source 1 phase A current twenty-fifth harmonic
10273	SRC 1 Ib THD	%	Source 1 phase B current total harmonic distortion
10274	SRC 1 Ib Harm[2]	%	Source 1 phase B current second harmonic
10275	SRC 1 Ib Harm[3]	%	Source 1 phase B current third harmonic
10276	SRC 1 Ib Harm[4]	%	Source 1 phase B current fourth harmonic
10277	SRC 1 Ib Harm[5]	%	Source 1 phase B current fifth harmonic
10278	SRC 1 Ib Harm[6]	%	Source 1 phase B current sixth harmonic
10279	SRC 1 Ib Harm[7]	%	Source 1 phase B current seventh harmonic
10280	SRC 1 Ib Harm[8]	%	Source 1 phase B current eighth harmonic
10281	SRC 1 Ib Harm[9]	%	Source 1 phase B current ninth harmonic
10282	SRC 1 Ib Harm[10]	%	Source 1 phase B current tenth harmonic
10283	SRC 1 Ib Harm[11]	%	Source 1 phase B current eleventh harmonic
10284	SRC 1 Ib Harm[12]	%	Source 1 phase B current twelfth harmonic
10285	SRC 1 Ib Harm[13]	%	Source 1 phase B current thirteenth harmonic
10286	SRC 1 Ib Harm[14]	%	Source 1 phase B current fourteenth harmonic
10287	SRC 1 Ib Harm[15]	%	Source 1 phase B current fifteenth harmonic
10288	SRC 1 Ib Harm[16]	%	Source 1 phase B current sixteenth harmonic
10289	SRC 1 Ib Harm[17]	%	Source 1 phase B current seventeenth harmonic
10290	SRC 1 Ib Harm[18]	%	Source 1 phase B current eighteenth harmonic
10291	SRC 1 Ib Harm[19]	%	Source 1 phase B current nineteenth harmonic
10292	SRC 1 Ib Harm[20]	%	Source 1 phase B current twentieth harmonic
10293	SRC 1 Ib Harm[21]	%	Source 1 phase B current twenty-first harmonic
10294	SRC 1 Ib Harm[22]	%	Source 1 phase B current twenty-second harmonic
10295	SRC 1 Ib Harm[23]	%	Source 1 phase B current twenty-third harmonic
10296	SRC 1 Ib Harm[24]	%	Source 1 phase B current twenty-fourth harmonic
10297	SRC 1 Ib Harm[25]	%	Source 1 phase B current twenty-fifth harmonic
10306	SRC 1 Ic THD	%	Source 1 phase C current total harmonic distortion
10307	SRC 1 Ic Harm[2]	%	Source 1 phase C current second harmonic
10308	SRC 1 Ic Harm[3]	%	Source 1 phase C current third harmonic
10309	SRC 1 Ic Harm[4]	%	Source 1 phase C current fourth harmonic
10310	SRC 1 Ic Harm[5]	%	Source 1 phase C current fifth harmonic
10311	SRC 1 Ic Harm[6]	%	Source 1 phase C current sixth harmonic
10312	SRC 1 Ic Harm[7]	%	Source 1 phase C current seventh harmonic
10313	SRC 1 Ic Harm[8]	%	Source 1 phase C current eighth harmonic
10314	SRC 1 Ic Harm[9]	%	Source 1 phase C current ninth harmonic
10315	SRC 1 Ic Harm[10]	%	Source 1 phase C current tenth harmonic
10316	SRC 1 Ic Harm[11]	%	Source 1 phase C current eleventh harmonic
10317	SRC 1 Ic Harm[12]	%	Source 1 phase C current twelfth harmonic
10318	SRC 1 Ic Harm[13]	%	Source 1 phase C current thirteenth harmonic
10319	SRC 1 Ic Harm[14]	%	Source 1 phase C current fourteenth harmonic
10320	SRC 1 Ic Harm[15]	%	Source 1 phase C current fifteenth harmonic

Table A–1: FLEXANALOG DATA ITEMS (Sheet 21 of 33)

DECIMAL ADDRESS	FLEXANALOG NAME	UNITS	DESCRIPTION
10321	SRC 1 Ic Harm[16]	%	Source 1 phase C current sixteenth harmonic
10322	SRC 1 Ic Harm[17]	%	Source 1 phase C current seventeenth harmonic
10323	SRC 1 Ic Harm[18]	%	Source 1 phase C current eighteenth harmonic
10324	SRC 1 Ic Harm[19]	%	Source 1 phase C current nineteenth harmonic
10325	SRC 1 Ic Harm[20]	%	Source 1 phase C current twentieth harmonic
10326	SRC 1 Ic Harm[21]	%	Source 1 phase C current twenty-first harmonic
10327	SRC 1 Ic Harm[22]	%	Source 1 phase C current twenty-second harmonic
10328	SRC 1 Ic Harm[23]	%	Source 1 phase C current twenty-third harmonic
10329	SRC 1 Ic Harm[24]	%	Source 1 phase C current twenty-fourth harmonic
10330	SRC 1 Ic Harm[25]	%	Source 1 phase C current twenty-fifth harmonic
10339	SRC 2 Ia THD	%	Source 2 phase A current total harmonic distortion
10340	SRC 2 Ia Harm[2]	%	Source 2 phase A current second harmonic
10341	SRC 2 Ia Harm[3]	%	Source 2 phase A current third harmonic
10342	SRC 2 Ia Harm[4]	%	Source 2 phase A current fourth harmonic
10343	SRC 2 Ia Harm[5]	%	Source 2 phase A current fifth harmonic
10344	SRC 2 Ia Harm[6]	%	Source 2 phase A current sixth harmonic
10345	SRC 2 Ia Harm[7]	%	Source 2 phase A current seventh harmonic
10346	SRC 2 Ia Harm[8]	%	Source 2 phase A current eighth harmonic
10347	SRC 2 Ia Harm[9]	%	Source 2 phase A current ninth harmonic
10348	SRC 2 Ia Harm[10]	%	Source 2 phase A current tenth harmonic
10349	SRC 2 Ia Harm[11]	%	Source 2 phase A current eleventh harmonic
10350	SRC 2 Ia Harm[12]	%	Source 2 phase A current twelfth harmonic
10351	SRC 2 Ia Harm[13]	%	Source 2 phase A current thirteenth harmonic
10352	SRC 2 Ia Harm[14]	%	Source 2 phase A current fourteenth harmonic
10353	SRC 2 Ia Harm[15]	%	Source 2 phase A current fifteenth harmonic
10354	SRC 2 Ia Harm[16]	%	Source 2 phase A current sixteenth harmonic
10355	SRC 2 Ia Harm[17]	%	Source 2 phase A current seventeenth harmonic
10356	SRC 2 Ia Harm[18]	%	Source 2 phase A current eighteenth harmonic
10357	SRC 2 Ia Harm[19]	%	Source 2 phase A current nineteenth harmonic
10358	SRC 2 Ia Harm[20]	%	Source 2 phase A current twentieth harmonic
10359	SRC 2 Ia Harm[21]	%	Source 2 phase A current twenty-first harmonic
10360	SRC 2 Ia Harm[22]	%	Source 2 phase A current twenty-second harmonic
10361	SRC 2 Ia Harm[23]	%	Source 2 phase A current twenty-third harmonic
10362	SRC 2 Ia Harm[24]	%	Source 2 phase A current twenty-fourth harmonic
10363	SRC 2 Ia Harm[25]	%	Source 2 phase A current twenty-fifth harmonic
10372	SRC 2 Ib THD	%	Source 2 phase B current total harmonic distortion
10373	SRC 2 Ib Harm[2]	%	Source 2 phase B current second harmonic
10374	SRC 2 Ib Harm[3]	%	Source 2 phase B current third harmonic
10375	SRC 2 Ib Harm[4]	%	Source 2 phase B current fourth harmonic
10376	SRC 2 Ib Harm[5]	%	Source 2 phase B current fifth harmonic
10377	SRC 2 Ib Harm[6]	%	Source 2 phase B current sixth harmonic
10378	SRC 2 Ib Harm[7]	%	Source 2 phase B current seventh harmonic
10379	SRC 2 Ib Harm[8]	%	Source 2 phase B current eighth harmonic
10380	SRC 2 Ib Harm[9]	%	Source 2 phase B current ninth harmonic
10381	SRC 2 Ib Harm[10]	%	Source 2 phase B current tenth harmonic
10382	SRC 2 Ib Harm[11]	%	Source 2 phase B current eleventh harmonic
10383	SRC 2 Ib Harm[12]	%	Source 2 phase B current twelfth harmonic

A

Table A–1: FLEXANALOG DATA ITEMS (Sheet 22 of 33)

DECIMAL ADDRESS	FLEXANALOG NAME	UNITS	DESCRIPTION
10384	SRC 2 Ib Harm[13]	%	Source 2 phase B current thirteenth harmonic
10385	SRC 2 Ib Harm[14]	%	Source 2 phase B current fourteenth harmonic
10386	SRC 2 Ib Harm[15]	%	Source 2 phase B current fifteenth harmonic
10387	SRC 2 Ib Harm[16]	%	Source 2 phase B current sixteenth harmonic
10388	SRC 2 Ib Harm[17]	%	Source 2 phase B current seventeenth harmonic
10389	SRC 2 Ib Harm[18]	%	Source 2 phase B current eighteenth harmonic
10390	SRC 2 Ib Harm[19]	%	Source 2 phase B current nineteenth harmonic
10391	SRC 2 Ib Harm[20]	%	Source 2 phase B current twentieth harmonic
10392	SRC 2 Ib Harm[21]	%	Source 2 phase B current twenty-first harmonic
10393	SRC 2 Ib Harm[22]	%	Source 2 phase B current twenty-second harmonic
10394	SRC 2 Ib Harm[23]	%	Source 2 phase B current twenty-third harmonic
10395	SRC 2 Ib Harm[24]	%	Source 2 phase B current twenty-fourth harmonic
10396	SRC 2 Ib Harm[25]	%	Source 2 phase B current twenty-fifth harmonic
10405	SRC 2 Ic THD	%	Source 2 phase C current total harmonic distortion
10406	SRC 2 Ic Harm[2]	%	Source 2 phase C current second harmonic
10407	SRC 2 Ic Harm[3]	%	Source 2 phase C current third harmonic
10408	SRC 2 Ic Harm[4]	%	Source 2 phase C current fourth harmonic
10409	SRC 2 Ic Harm[5]	%	Source 2 phase C current fifth harmonic
10410	SRC 2 Ic Harm[6]	%	Source 2 phase C current sixth harmonic
10411	SRC 2 Ic Harm[7]	%	Source 2 phase C current seventh harmonic
10412	SRC 2 Ic Harm[8]	%	Source 2 phase C current eighth harmonic
10413	SRC 2 Ic Harm[9]	%	Source 2 phase C current ninth harmonic
10414	SRC 2 Ic Harm[10]	%	Source 2 phase C current tenth harmonic
10415	SRC 2 Ic Harm[11]	%	Source 2 phase C current eleventh harmonic
10416	SRC 2 Ic Harm[12]	%	Source 2 phase C current twelfth harmonic
10417	SRC 2 Ic Harm[13]	%	Source 2 phase C current thirteenth harmonic
10418	SRC 2 Ic Harm[14]	%	Source 2 phase C current fourteenth harmonic
10419	SRC 2 Ic Harm[15]	%	Source 2 phase C current fifteenth harmonic
10420	SRC 2 Ic Harm[16]	%	Source 2 phase C current sixteenth harmonic
10421	SRC 2 Ic Harm[17]	%	Source 2 phase C current seventeenth harmonic
10422	SRC 2 Ic Harm[18]	%	Source 2 phase C current eighteenth harmonic
10423	SRC 2 Ic Harm[19]	%	Source 2 phase C current nineteenth harmonic
10424	SRC 2 Ic Harm[20]	%	Source 2 phase C current twentieth harmonic
10425	SRC 2 Ic Harm[21]	%	Source 2 phase C current twenty-first harmonic
10426	SRC 2 Ic Harm[22]	%	Source 2 phase C current twenty-second harmonic
10427	SRC 2 Ic Harm[23]	%	Source 2 phase C current twenty-third harmonic
10428	SRC 2 Ic Harm[24]	%	Source 2 phase C current twenty-fourth harmonic
10429	SRC 2 Ic Harm[25]	%	Source 2 phase C current twenty-fifth harmonic
10438	SRC 3 Ia THD	%	Source 3 phase A current total harmonic distortion
10439	SRC 3 Ia Harm[2]	%	Source 3 phase A current second harmonic
10440	SRC 3 Ia Harm[3]	%	Source 3 phase A current third harmonic
10441	SRC 3 Ia Harm[4]	%	Source 3 phase A current fourth harmonic
10442	SRC 3 Ia Harm[5]	%	Source 3 phase A current fifth harmonic
10443	SRC 3 Ia Harm[6]	%	Source 3 phase A current sixth harmonic
10444	SRC 3 Ia Harm[7]	%	Source 3 phase A current seventh harmonic
10445	SRC 3 Ia Harm[8]	%	Source 3 phase A current eighth harmonic
10446	SRC 3 Ia Harm[9]	%	Source 3 phase A current ninth harmonic

Table A–1: FLEXANALOG DATA ITEMS (Sheet 23 of 33)

DECIMAL ADDRESS	FLEXANALOG NAME	UNITS	DESCRIPTION
10447	SRC 3 Ia Harm[10]	%	Source 3 phase A current tenth harmonic
10448	SRC 3 Ia Harm[11]	%	Source 3 phase A current eleventh harmonic
10449	SRC 3 Ia Harm[12]	%	Source 3 phase A current twelfth harmonic
10450	SRC 3 Ia Harm[13]	%	Source 3 phase A current thirteenth harmonic
10451	SRC 3 Ia Harm[14]	%	Source 3 phase A current fourteenth harmonic
10452	SRC 3 Ia Harm[15]	%	Source 3 phase A current fifteenth harmonic
10453	SRC 3 Ia Harm[16]	%	Source 3 phase A current sixteenth harmonic
10454	SRC 3 Ia Harm[17]	%	Source 3 phase A current seventeenth harmonic
10455	SRC 3 Ia Harm[18]	%	Source 3 phase A current eighteenth harmonic
10456	SRC 3 Ia Harm[19]	%	Source 3 phase A current nineteenth harmonic
10457	SRC 3 Ia Harm[20]	%	Source 3 phase A current twentieth harmonic
10458	SRC 3 Ia Harm[21]	%	Source 3 phase A current twenty-first harmonic
10459	SRC 3 Ia Harm[22]	%	Source 3 phase A current twenty-second harmonic
10460	SRC 3 Ia Harm[23]	%	Source 3 phase A current twenty-third harmonic
10461	SRC 3 Ia Harm[24]	%	Source 3 phase A current twenty-fourth harmonic
10462	SRC 3 Ia Harm[25]	%	Source 3 phase A current twenty-fifth harmonic
10471	SRC 3 Ib THD	%	Source 3 phase B current total harmonic distortion
10472	SRC 3 Ib Harm[2]	%	Source 3 phase B current second harmonic
10473	SRC 3 Ib Harm[3]	%	Source 3 phase B current third harmonic
10474	SRC 3 Ib Harm[4]	%	Source 3 phase B current fourth harmonic
10475	SRC 3 Ib Harm[5]	%	Source 3 phase B current fifth harmonic
10476	SRC 3 Ib Harm[6]	%	Source 3 phase B current sixth harmonic
10477	SRC 3 Ib Harm[7]	%	Source 3 phase B current seventh harmonic
10478	SRC 3 Ib Harm[8]	%	Source 3 phase B current eighth harmonic
10479	SRC 3 Ib Harm[9]	%	Source 3 phase B current ninth harmonic
10480	SRC 3 Ib Harm[10]	%	Source 3 phase B current tenth harmonic
10481	SRC 3 Ib Harm[11]	%	Source 3 phase B current eleventh harmonic
10482	SRC 3 Ib Harm[12]	%	Source 3 phase B current twelfth harmonic
10483	SRC 3 Ib Harm[13]	%	Source 3 phase B current thirteenth harmonic
10484	SRC 3 Ib Harm[14]	%	Source 3 phase B current fourteenth harmonic
10485	SRC 3 Ib Harm[15]	%	Source 3 phase B current fifteenth harmonic
10486	SRC 3 Ib Harm[16]	%	Source 3 phase B current sixteenth harmonic
10487	SRC 3 Ib Harm[17]	%	Source 3 phase B current seventeenth harmonic
10488	SRC 3 Ib Harm[18]	%	Source 3 phase B current eighteenth harmonic
10489	SRC 3 Ib Harm[19]	%	Source 3 phase B current nineteenth harmonic
10490	SRC 3 Ib Harm[20]	%	Source 3 phase B current twentieth harmonic
10491	SRC 3 Ib Harm[21]	%	Source 3 phase B current twenty-first harmonic
10492	SRC 3 Ib Harm[22]	%	Source 3 phase B current twenty-second harmonic
10493	SRC 3 Ib Harm[23]	%	Source 3 phase B current twenty-third harmonic
10494	SRC 3 Ib Harm[24]	%	Source 3 phase B current twenty-fourth harmonic
10495	SRC 3 Ib Harm[25]	%	Source 3 phase B current twenty-fifth harmonic
10504	SRC 3 Ic THD	%	Source 3 phase C current total harmonic distortion
10505	SRC 3 Ic Harm[2]	%	Source 3 phase C current second harmonic
10506	SRC 3 Ic Harm[3]	%	Source 3 phase C current third harmonic
10507	SRC 3 Ic Harm[4]	%	Source 3 phase C current fourth harmonic
10508	SRC 3 Ic Harm[5]	%	Source 3 phase C current fifth harmonic
10509	SRC 3 Ic Harm[6]	%	Source 3 phase C current sixth harmonic

A

Table A–1: FLEXANALOG DATA ITEMS (Sheet 24 of 33)

DECIMAL ADDRESS	FLEXANALOG NAME	UNITS	DESCRIPTION
10510	SRC 3 Ic Harm[7]	%	Source 3 phase C current seventh harmonic
10511	SRC 3 Ic Harm[8]	%	Source 3 phase C current eighth harmonic
10512	SRC 3 Ic Harm[9]	%	Source 3 phase C current ninth harmonic
10513	SRC 3 Ic Harm[10]	%	Source 3 phase C current tenth harmonic
10514	SRC 3 Ic Harm[11]	%	Source 3 phase C current eleventh harmonic
10515	SRC 3 Ic Harm[12]	%	Source 3 phase C current twelfth harmonic
10516	SRC 3 Ic Harm[13]	%	Source 3 phase C current thirteenth harmonic
10517	SRC 3 Ic Harm[14]	%	Source 3 phase C current fourteenth harmonic
10518	SRC 3 Ic Harm[15]	%	Source 3 phase C current fifteenth harmonic
10519	SRC 3 Ic Harm[16]	%	Source 3 phase C current sixteenth harmonic
10520	SRC 3 Ic Harm[17]	%	Source 3 phase C current seventeenth harmonic
10521	SRC 3 Ic Harm[18]	%	Source 3 phase C current eighteenth harmonic
10522	SRC 3 Ic Harm[19]	%	Source 3 phase C current nineteenth harmonic
10523	SRC 3 Ic Harm[20]	%	Source 3 phase C current twentieth harmonic
10524	SRC 3 Ic Harm[21]	%	Source 3 phase C current twenty-first harmonic
10525	SRC 3 Ic Harm[22]	%	Source 3 phase C current twenty-second harmonic
10526	SRC 3 Ic Harm[23]	%	Source 3 phase C current twenty-third harmonic
10527	SRC 3 Ic Harm[24]	%	Source 3 phase C current twenty-fourth harmonic
10528	SRC 3 Ic Harm[25]	%	Source 3 phase C current twenty-fifth harmonic
10537	SRC 4 Ia THD	%	Source 4 phase A current total harmonic distortion
10538	SRC 4 Ia Harm[2]	%	Source 4 phase A current second harmonic
10539	SRC 4 Ia Harm[3]	%	Source 4 phase A current third harmonic
10540	SRC 4 Ia Harm[4]	%	Source 4 phase A current fourth harmonic
10541	SRC 4 Ia Harm[5]	%	Source 4 phase A current fifth harmonic
10542	SRC 4 Ia Harm[6]	%	Source 4 phase A current sixth harmonic
10543	SRC 4 Ia Harm[7]	%	Source 4 phase A current seventh harmonic
10544	SRC 4 Ia Harm[8]	%	Source 4 phase A current eighth harmonic
10545	SRC 4 Ia Harm[9]	%	Source 4 phase A current ninth harmonic
10546	SRC 4 Ia Harm[10]	%	Source 4 phase A current tenth harmonic
10547	SRC 4 Ia Harm[11]	%	Source 4 phase A current eleventh harmonic
10548	SRC 4 Ia Harm[12]	%	Source 4 phase A current twelfth harmonic
10549	SRC 4 Ia Harm[13]	%	Source 4 phase A current thirteenth harmonic
10550	SRC 4 Ia Harm[14]	%	Source 4 phase A current fourteenth harmonic
10551	SRC 4 Ia Harm[15]	%	Source 4 phase A current fifteenth harmonic
10552	SRC 4 Ia Harm[16]	%	Source 4 phase A current sixteenth harmonic
10553	SRC 4 Ia Harm[17]	%	Source 4 phase A current seventeenth harmonic
10554	SRC 4 Ia Harm[18]	%	Source 4 phase A current eighteenth harmonic
10555	SRC 4 Ia Harm[19]	%	Source 4 phase A current nineteenth harmonic
10556	SRC 4 Ia Harm[20]	%	Source 4 phase A current twentieth harmonic
10557	SRC 4 Ia Harm[21]	%	Source 4 phase A current twenty-first harmonic
10558	SRC 4 Ia Harm[22]	%	Source 4 phase A current twenty-second harmonic
10559	SRC 4 Ia Harm[23]	%	Source 4 phase A current twenty-third harmonic
10560	SRC 4 Ia Harm[24]	%	Source 4 phase A current twenty-fourth harmonic
10561	SRC 4 Ia Harm[25]	%	Source 4 phase A current twenty-fifth harmonic
10570	SRC 4 Ib THD	%	Source 4 phase B current total harmonic distortion
10571	SRC 4 Ib Harm[2]	%	Source 4 phase B current second harmonic
10572	SRC 4 Ib Harm[3]	%	Source 4 phase B current third harmonic

Table A–1: FLEXANALOG DATA ITEMS (Sheet 25 of 33)

DECIMAL ADDRESS	FLEXANALOG NAME	UNITS	DESCRIPTION
10573	SRC 4 Ib Harm[4]	%	Source 4 phase B current fourth harmonic
10574	SRC 4 Ib Harm[5]	%	Source 4 phase B current fifth harmonic
10575	SRC 4 Ib Harm[6]	%	Source 4 phase B current sixth harmonic
10576	SRC 4 Ib Harm[7]	%	Source 4 phase B current seventh harmonic
10577	SRC 4 Ib Harm[8]	%	Source 4 phase B current eighth harmonic
10578	SRC 4 Ib Harm[9]	%	Source 4 phase B current ninth harmonic
10579	SRC 4 Ib Harm[10]	%	Source 4 phase B current tenth harmonic
10580	SRC 4 Ib Harm[11	%	Source 4 phase B current eleventh harmonic
10581	SRC 4 Ib Harm[12]	%	Source 4 phase B current twelfth harmonic
10582	SRC 4 Ib Harm[13]	%	Source 4 phase B current thirteenth harmonic
10583	SRC 4 Ib Harm[14]	%	Source 4 phase B current fourteenth harmonic
10584	SRC 4 Ib Harm[15]	%	Source 4 phase B current fifteenth harmonic
10585	SRC 4 Ib Harm[16]	%	Source 4 phase B current sixteenth harmonic
10586	SRC 4 Ib Harm[17]	%	Source 4 phase B current seventeenth harmonic
10587	SRC 4 Ib Harm[18]	%	Source 4 phase B current eighteenth harmonic
10588	SRC 4 Ib Harm[19]	%	Source 4 phase B current nineteenth harmonic
10589	SRC 4 Ib Harm[20]	%	Source 4 phase B current twentieth harmonic
10590	SRC 4 Ib Harm[21]	%	Source 4 phase B current twenty-first harmonic
10591	SRC 4 Ib Harm[22]	%	Source 4 phase B current twenty-second harmonic
10592	SRC 4 Ib Harm[23]	%	Source 4 phase B current twenty-third harmonic
10593	SRC 4 Ib Harm[24]	%	Source 4 phase B current twenty-fourth harmonic
10594	SRC 4 Ib Harm[25]	%	Source 4 phase B current twenty-fifth harmonic
10603	SRC 4 Ic THD	%	Source 4 phase C current total harmonic distortion
10604	SRC 4 Ic Harm[2]	%	Source 4 phase C current second harmonic
10605	SRC 4 Ic Harm[3]	%	Source 4 phase C current third harmonic
10606	SRC 4 Ic Harm[4]	%	Source 4 phase C current fourth harmonic
10607	SRC 4 Ic Harm[5]	%	Source 4 phase C current fifth harmonic
10608	SRC 4 Ic Harm[6]	%	Source 4 phase C current sixth harmonic
10609	SRC 4 Ic Harm[7]	%	Source 4 phase C current seventh harmonic
10610	SRC 4 Ic Harm[8]	%	Source 4 phase C current eighth harmonic
10611	SRC 4 Ic Harm[9]	%	Source 4 phase C current ninth harmonic
10612	SRC 4 Ic Harm[10]	%	Source 4 phase C current tenth harmonic
10613	SRC 4 Ic Harm[11]	%	Source 4 phase C current eleventh harmonic
10614	SRC 4 Ic Harm[12]	%	Source 4 phase C current twelfth harmonic
10615	SRC 4 Ic Harm[13]	%	Source 4 phase C current thirteenth harmonic
10616	SRC 4 Ic Harm[14]	%	Source 4 phase C current fourteenth harmonic
10617	SRC 4 Ic Harm[15]	%	Source 4 phase C current fifteenth harmonic
10618	SRC 4 Ic Harm[16]	%	Source 4 phase C current sixteenth harmonic
10619	SRC 4 Ic Harm[17]	%	Source 4 phase C current seventeenth harmonic
10620	SRC 4 Ic Harm[18]	%	Source 4 phase C current eighteenth harmonic
10621	SRC 4 Ic Harm[19]	%	Source 4 phase C current nineteenth harmonic
10622	SRC 4 Ic Harm[20]	%	Source 4 phase C current twentieth harmonic
10623	SRC 4 Ic Harm[21]	%	Source 4 phase C current twenty-first harmonic
10624	SRC 4 Ic Harm[22]	%	Source 4 phase C current twenty-second harmonic
10625	SRC 4 Ic Harm[23]	%	Source 4 phase C current twenty-third harmonic
10626	SRC 4 Ic Harm[24]	%	Source 4 phase C current twenty-fourth harmonic
10627	SRC 4 Ic Harm[25]	%	Source 4 phase C current twenty-fifth harmonic

A

Table A–1: FLEXANALOG DATA ITEMS (Sheet 26 of 33)

DECIMAL ADDRESS	FLEXANALOG NAME	UNITS	DESCRIPTION
10636	SRC 5 Ia THD	%	Source 5 phase A current total harmonic distortion
10637	SRC 5 Ia Harm[2]	%	Source 5 phase A current second harmonic
10638	SRC 5 Ia Harm[3]	%	Source 5 phase A current third harmonic
10639	SRC 5 Ia Harm[4]	%	Source 5 phase A current fourth harmonic
10640	SRC 5 Ia Harm[5]	%	Source 5 phase A current fifth harmonic
10641	SRC 5 Ia Harm[6]	%	Source 5 phase A current sixth harmonic
10642	SRC 5 Ia Harm[7]	%	Source 5 phase A current seventh harmonic
10643	SRC 5 Ia Harm[8]	%	Source 5 phase A current eighth harmonic
10644	SRC 5 Ia Harm[9]	%	Source 5 phase A current ninth harmonic
10645	SRC 5 Ia Harm[10]	%	Source 5 phase A current tenth harmonic
10646	SRC 5 Ia Harm[11]	%	Source 5 phase A current eleventh harmonic
10647	SRC 5 Ia Harm[12]	%	Source 5 phase A current twelfth harmonic
10648	SRC 5 Ia Harm[13]	%	Source 5 phase A current thirteenth harmonic
10649	SRC 5 Ia Harm[14]	%	Source 5 phase A current fourteenth harmonic
10650	SRC 5 Ia Harm[15]	%	Source 5 phase A current fifteenth harmonic
10651	SRC 5 Ia Harm[16]	%	Source 5 phase A current sixteenth harmonic
10652	SRC 5 Ia Harm[17]	%	Source 5 phase A current seventeenth harmonic
10653	SRC 5 Ia Harm[18]	%	Source 5 phase A current eighteenth harmonic
10654	SRC 5 Ia Harm[19]	%	Source 5 phase A current nineteenth harmonic
10655	SRC 5 Ia Harm[20]	%	Source 5 phase A current twentieth harmonic
10656	SRC 5 Ia Harm[21]	%	Source 5 phase A current twenty-first harmonic
10657	SRC 5 Ia Harm[22]	%	Source 5 phase A current twenty-second harmonic
10658	SRC 5 Ia Harm[23]	%	Source 5 phase A current twenty-third harmonic
10659	SRC 5 Ia Harm[24]	%	Source 5 phase A current twenty-fourth harmonic
10660	SRC 5 Ia Harm[25]	%	Source 5 phase A current twenty-fifth harmonic
10669	SRC 5 Ib THD	%	Source 5 phase B current total harmonic distortion
10670	SRC 5 Ib Harm[2]	%	Source 5 phase B current second harmonic
10671	SRC 5 Ib Harm[3]	%	Source 5 phase B current third harmonic
10672	SRC 5 Ib Harm[4]	%	Source 5 phase B current fourth harmonic
10673	SRC 5 Ib Harm[5]	%	Source 5 phase B current fifth harmonic
10674	SRC 5 Ib Harm[6]	%	Source 5 phase B current sixth harmonic
10675	SRC 5 Ib Harm[7]	%	Source 5 phase B current seventh harmonic
10676	SRC 5 Ib Harm[8]	%	Source 5 phase B current eighth harmonic
10677	SRC 5 Ib Harm[9]	%	Source 5 phase B current ninth harmonic
10678	SRC 5 Ib Harm[10]	%	Source 5 phase B current tenth harmonic
10679	SRC 5 Ib Harm[11]	%	Source 5 phase B current eleventh harmonic
10680	SRC 5 Ib Harm[12]	%	Source 5 phase B current twelfth harmonic
10681	SRC 5 Ib Harm[13]	%	Source 5 phase B current thirteenth harmonic
10682	SRC 5 Ib Harm[14]	%	Source 5 phase B current fourteenth harmonic
10683	SRC 5 Ib Harm[15]	%	Source 5 phase B current fifteenth harmonic
10684	SRC 5 Ib Harm[16]	%	Source 5 phase B current sixteenth harmonic
10685	SRC 5 Ib Harm[17]	%	Source 5 phase B current seventeenth harmonic
10686	SRC 5 Ib Harm[18]	%	Source 5 phase B current eighteenth harmonic
10687	SRC 5 Ib Harm[19]	%	Source 5 phase B current nineteenth harmonic
10688	SRC 5 Ib Harm[20]	%	Source 5 phase B current twentieth harmonic
10689	SRC 5 Ib Harm[21]	%	Source 5 phase B current twenty-first harmonic
10690	SRC 5 Ib Harm[22]	%	Source 5 phase B current twenty-second harmonic

Table A–1: FLEXANALOG DATA ITEMS (Sheet 27 of 33)

DECIMAL ADDRESS	FLEXANALOG NAME	UNITS	DESCRIPTION
10691	SRC 5 Ib Harm[23]	%	Source 5 phase B current twenty-third harmonic
10692	SRC 5 Ib Harm[24]	%	Source 5 phase B current twenty-fourth harmonic
10693	SRC 5 Ib Harm[25]	%	Source 5 phase B current twenty-fifth harmonic
10702	SRC 5 Ic THD	%	Source 5 phase C current total harmonic distortion
10703	SRC 5 Ic Harm[2]	%	Source 5 phase C current second harmonic
10704	SRC 5 Ic Harm[3]	%	Source 5 phase C current third harmonic
10705	SRC 5 Ic Harm[4]	%	Source 5 phase C current fourth harmonic
10706	SRC 5 Ic Harm[5]	%	Source 5 phase C current fifth harmonic
10707	SRC 5 Ic Harm[6]	%	Source 5 phase C current sixth harmonic
10708	SRC 5 Ic Harm[7]	%	Source 5 phase C current seventh harmonic
10709	SRC 5 Ic Harm[8]	%	Source 5 phase C current eighth harmonic
10710	SRC 5 Ic Harm[9]	%	Source 5 phase C current ninth harmonic
10711	SRC 5 Ic Harm[10]	%	Source 5 phase C current tenth harmonic
10712	SRC 5 Ic Harm[11]	%	Source 5 phase C current eleventh harmonic
10713	SRC 5 Ic Harm[12]	%	Source 5 phase C current twelfth harmonic
10714	SRC 5 Ic Harm[13]	%	Source 5 phase C current thirteenth harmonic
10715	SRC 5 Ic Harm[14]	%	Source 5 phase C current fourteenth harmonic
10716	SRC 5 Ic Harm[15]	%	Source 5 phase C current fifteenth harmonic
10717	SRC 5 Ic Harm[16]	%	Source 5 phase C current sixteenth harmonic
10718	SRC 5 Ic Harm[17]	%	Source 5 phase C current seventeenth harmonic
10719	SRC 5 Ic Harm[18]	%	Source 5 phase C current eighteenth harmonic
10720	SRC 5 Ic Harm[19]	%	Source 5 phase C current nineteenth harmonic
10721	SRC 5 Ic Harm[20]	%	Source 5 phase C current twentieth harmonic
10722	SRC 5 Ic Harm[21]	%	Source 5 phase C current twenty-first harmonic
10723	SRC 5 Ic Harm[22]	%	Source 5 phase C current twenty-second harmonic
10724	SRC 5 Ic Harm[23]	%	Source 5 phase C current twenty-third harmonic
10725	SRC 5 Ic Harm[24]	%	Source 5 phase C current twenty-fourth harmonic
10726	SRC 5 Ic Harm[25]	%	Source 5 phase C current twenty-fifth harmonic
10735	SRC 6 Ia THD	%	Source 6 phase A current total harmonic distortion
10736	SRC 6 Ia Harm[2]	%	Source 6 phase A current second harmonic
10737	SRC 6 Ia Harm[3]	%	Source 6 phase A current third harmonic
10738	SRC 6 Ia Harm[4]	%	Source 6 phase A current fourth harmonic
10739	SRC 6 Ia Harm[5]	%	Source 6 phase A current fifth harmonic
10740	SRC 6 Ia Harm[6]	%	Source 6 phase A current sixth harmonic
10741	SRC 6 Ia Harm[7]	%	Source 6 phase A current seventh harmonic
10742	SRC 6 Ia Harm[8]	%	Source 6 phase A current eighth harmonic
10743	SRC 6 Ia Harm[9]	%	Source 6 phase A current ninth harmonic
10744	SRC 6 Ia Harm[10]	%	Source 6 phase A current tenth harmonic
10745	SRC 6 Ia Harm[11]	%	Source 6 phase A current eleventh harmonic
10746	SRC 6 Ia Harm[12]	%	Source 6 phase A current twelfth harmonic
10747	SRC 6 Ia Harm[13]	%	Source 6 phase A current thirteenth harmonic
10748	SRC 6 Ia Harm[14]	%	Source 6 phase A current fourteenth harmonic
10749	SRC 6 Ia Harm[15]	%	Source 6 phase A current fifteenth harmonic
10750	SRC 6 Ia Harm[16]	%	Source 6 phase A current sixteenth harmonic
10751	SRC 6 Ia Harm[17]	%	Source 6 phase A current seventeenth harmonic
10752	SRC 6 Ia Harm[18]	%	Source 6 phase A current eighteenth harmonic
10753	SRC 6 Ia Harm[19]	%	Source 6 phase A current nineteenth harmonic

A

Table A–1: FLEXANALOG DATA ITEMS (Sheet 28 of 33)

DECIMAL ADDRESS	FLEXANALOG NAME	UNITS	DESCRIPTION
10754	SRC 6 Ia Harm[20]	%	Source 6 phase A current twentieth harmonic
10755	SRC 6 Ia Harm[21]	%	Source 6 phase A current twenty-first harmonic
10756	SRC 6 Ia Harm[22]	%	Source 6 phase A current twenty-second harmonic
10757	SRC 6 Ia Harm[23]	%	Source 6 phase A current twenty-third harmonic
10758	SRC 6 Ia Harm[24]	%	Source 6 phase A current twenty-fourth harmonic
10759	SRC 6 Ia Harm[25]	%	Source 6 phase A current twenty-fifth harmonic
10768	SRC 6 Ib THD	%	Source 6 phase B current total harmonic distortion
10769	SRC 6 Ib Harm[2]	%	Source 6 phase B current second harmonic
10770	SRC 6 Ib Harm[3]	%	Source 6 phase B current third harmonic
10771	SRC 6 Ib Harm[4]	%	Source 6 phase B current fourth harmonic
10772	SRC 6 Ib Harm[5]	%	Source 6 phase B current fifth harmonic
10773	SRC 6 Ib Harm[6]	%	Source 6 phase B current sixth harmonic
10774	SRC 6 Ib Harm[7]	%	Source 6 phase B current seventh harmonic
10775	SRC 6 Ib Harm[8]	%	Source 6 phase B current eighth harmonic
10776	SRC 6 Ib Harm[9]	%	Source 6 phase B current ninth harmonic
10777	SRC 6 Ib Harm[10]	%	Source 6 phase B current tenth harmonic
10778	SRC 6 Ib Harm[11]	%	Source 6 phase B current eleventh harmonic
10779	SRC 6 Ib Harm[12]	%	Source 6 phase B current twelfth harmonic
10780	SRC 6 Ib Harm[13]	%	Source 6 phase B current thirteenth harmonic
10781	SRC 6 Ib Harm[14]	%	Source 6 phase B current fourteenth harmonic
10782	SRC 6 Ib Harm[15]	%	Source 6 phase B current fifteenth harmonic
10783	SRC 6 Ib Harm[16]	%	Source 6 phase B current sixteenth harmonic
10784	SRC 6 Ib Harm[17]	%	Source 6 phase B current seventeenth harmonic
10785	SRC 6 Ib Harm[18]	%	Source 6 phase B current eighteenth harmonic
10786	SRC 6 Ib Harm[19]	%	Source 6 phase B current nineteenth harmonic
10787	SRC 6 Ib Harm[20]	%	Source 6 phase B current twentieth harmonic
10788	SRC 6 Ib Harm[21]	%	Source 6 phase B current twenty-first harmonic
10789	SRC 6 Ib Harm[22]	%	Source 6 phase B current twenty-second harmonic
10790	SRC 6 Ib Harm[23]	%	Source 6 phase B current twenty-third harmonic
10791	SRC 6 Ib Harm[24]	%	Source 6 phase B current twenty-fourth harmonic
10792	SRC 6 Ib Harm[25]	%	Source 6 phase B current twenty-fifth harmonic
10801	SRC 6 Ic THD	%	Source 6 phase C current total harmonic distortion
10802	SRC 6 Ic Harm[2]	%	Source 6 phase C current second harmonic
10803	SRC 6 Ic Harm[3]	%	Source 6 phase C current third harmonic
10804	SRC 6 Ic Harm[4]	%	Source 6 phase C current fourth harmonic
10805	SRC 6 Ic Harm[5]	%	Source 6 phase C current fifth harmonic
10806	SRC 6 Ic Harm[6]	%	Source 6 phase C current sixth harmonic
10807	SRC 6 Ic Harm[7]	%	Source 6 phase C current seventh harmonic
10808	SRC 6 Ic Harm[8]	%	Source 6 phase C current eighth harmonic
10809	SRC 6 Ic Harm[9]	%	Source 6 phase C current ninth harmonic
10810	SRC 6 Ic Harm[10]	%	Source 6 phase C current tenth harmonic
10811	SRC 6 Ic Harm[11]	%	Source 6 phase C current eleventh harmonic
10812	SRC 6 Ic Harm[12]	%	Source 6 phase C current twelfth harmonic
10813	SRC 6 Ic Harm[13]	%	Source 6 phase C current thirteenth harmonic
10814	SRC 6 Ic Harm[14]	%	Source 6 phase C current fourteenth harmonic
10815	SRC 6 Ic Harm[15]	%	Source 6 phase C current fifteenth harmonic
10816	SRC 6 Ic Harm[16]	%	Source 6 phase C current sixteenth harmonic

Table A–1: FLEXANALOG DATA ITEMS (Sheet 29 of 33)

DECIMAL ADDRESS	FLEXANALOG NAME	UNITS	DESCRIPTION
10817	SRC 6 Ic Harm[17]	%	Source 6 phase C current seventeenth harmonic
10818	SRC 6 Ic Harm[18]	%	Source 6 phase C current eighteenth harmonic
10819	SRC 6 Ic Harm[19]	%	Source 6 phase C current nineteenth harmonic
10820	SRC 6 Ic Harm[20]	%	Source 6 phase C current twentieth harmonic
10821	SRC 6 Ic Harm[21]	%	Source 6 phase C current twenty-first harmonic
10822	SRC 6 Ic Harm[22]	%	Source 6 phase C current twenty-second harmonic
10823	SRC 6 Ic Harm[23]	%	Source 6 phase C current twenty-third harmonic
10824	SRC 6 Ic Harm[24]	%	Source 6 phase C current twenty-fourth harmonic
10825	SRC 6 Ic Harm[25]	%	Source 6 phase C current twenty-fifth harmonic
12306	Oscill Num Triggers	---	Oscillography number of triggers
13504	DCmA Ip 1	mA	DCmA input 1 actual value
13506	DCmA Ip 2	mA	DCmA input 2 actual value
13508	DCmA Ip 3	mA	DCmA input 3 actual value
13510	DCmA Ip 4	mA	DCmA input 4 actual value
13512	DCmA Ip 5	mA	DCmA input 5 actual value
13514	DCmA Ip 6	mA	DCmA input 6 actual value
13516	DCmA Ip 7	mA	DCmA input 7 actual value
13518	DCmA Ip 8	mA	DCmA input 8 actual value
13520	DCmA Ip 9	mA	DCmA input 9 actual value
13522	DCmA Ip 10	mA	DCmA input 10 actual value
13524	DCmA Ip 11	mA	DCmA input 11 actual value
13526	DCmA Ip 12	mA	DCmA input 12 actual value
13528	DCmA Ip 13	mA	DCmA input 13 actual value
13530	DCmA Ip 14	mA	DCmA input 14 actual value
13532	DCmA Ip 15	mA	DCmA input 15 actual value
13534	DCmA Ip 16	mA	DCmA input 16 actual value
13536	DCmA Ip 17	mA	DCmA input 17 actual value
13538	DCmA Ip 18	mA	DCmA input 18 actual value
13540	DCmA Ip 19	mA	DCmA input 19 actual value
13542	DCmA Ip 20	mA	DCmA input 20 actual value
13544	DCmA Ip 21	mA	DCmA input 21 actual value
13546	DCmA Ip 22	mA	DCmA input 22 actual value
13548	DCmA Ip 23	mA	DCmA input 23 actual value
13550	DCmA Ip 24	mA	DCmA input 24 actual value
13552	RTD Ip 1	---	RTD input 1 actual value
13553	RTD Ip 2	---	RTD input 2 actual value
13554	RTD Ip 3	---	RTD input 3 actual value
13555	RTD Ip 4	---	RTD input 4 actual value
13556	RTD Ip 5	---	RTD input 5 actual value
13557	RTD Ip 6	---	RTD input 6 actual value
13558	RTD Ip 7	---	RTD input 7 actual value
13559	RTD Ip 8	---	RTD input 8 actual value
13560	RTD Ip 9	---	RTD input 9 actual value
13561	RTD Ip 10	---	RTD input 10 actual value
13562	RTD Ip 11	---	RTD input 11 actual value
13563	RTD Ip 12	---	RTD input 12 actual value
13564	RTD Ip 13	---	RTD input 13 actual value

A

Table A–1: FLEXANALOG DATA ITEMS (Sheet 30 of 33)

DECIMAL ADDRESS	FLEXANALOG NAME	UNITS	DESCRIPTION
13565	RTD Ip 14	---	RTD input 14 actual value
13566	RTD Ip 15	---	RTD input 15 actual value
13567	RTD Ip 16	---	RTD input 16 actual value
13568	RTD Ip 17	---	RTD input 17 actual value
13569	RTD Ip 18	---	RTD input 18 actual value
13570	RTD Ip 19	---	RTD input 19 actual value
13571	RTD Ip 20	---	RTD input 20 actual value
13572	RTD Ip 21	---	RTD input 21 actual value
13573	RTD Ip 22	---	RTD input 22 actual value
13574	RTD Ip 23	---	RTD input 23 actual value
13575	RTD Ip 24	---	RTD input 24 actual value
13576	RTD Ip 25	---	RTD input 25 actual value
13577	RTD Ip 26	---	RTD input 26 actual value
13578	RTD Ip 27	---	RTD input 27 actual value
13579	RTD Ip 28	---	RTD input 28 actual value
13580	RTD Ip 29	---	RTD input 29 actual value
13581	RTD Ip 30	---	RTD input 30 actual value
13582	RTD Ip 31	---	RTD input 31 actual value
13583	RTD Ip 32	---	RTD input 32 actual value
13584	RTD Ip 33	---	RTD input 33 actual value
13585	RTD Ip 34	---	RTD input 34 actual value
13586	RTD Ip 35	---	RTD input 35 actual value
13587	RTD Ip 36	---	RTD input 36 actual value
13588	RTD Ip 37	---	RTD input 37 actual value
13589	RTD Ip 38	---	RTD input 38 actual value
13590	RTD Ip 39	---	RTD input 39 actual value
13591	RTD Ip 40	---	RTD input 40 actual value
13592	RTD Ip 41	---	RTD input 41 actual value
13593	RTD Ip 42	---	RTD input 42 actual value
13594	RTD Ip 43	---	RTD input 43 actual value
13595	RTD Ip 44	---	RTD input 44 actual value
13596	RTD Ip 45	---	RTD input 45 actual value
13597	RTD Ip 46	---	RTD input 46 actual value
13598	RTD Ip 47	---	RTD input 47 actual value
13599	RTD Ip 48	---	RTD input 48 actual value
13600	Ohm Inputs 1 Value	Ohms	Ohm inputs 1 value
13601	Ohm Inputs 2 Value	Ohms	Ohm inputs 2 value
13824	60P 1 Raw Idiff A	pu	Phase current unbalance 1 raw phase A differential current actual value
13826	60P 1 Raw Idiff B	pu	Phase current unbalance 1 raw phase B differential current actual value
13828	60P 1 Raw Idiff C	pu	Phase current unbalance 1 raw phase C differential current actual value
13830	60P 1 Comp Iop A	pu	Phase current unbalance 1 composite phase A operating current actual value
13832	60P 1 Comp Iop B	pu	Phase current unbalance 1 composite phase B operating current actual value
13834	60P 1 Comp Iop C	pu	Phase current unbalance 1 composite phase C operating current actual value
13836	60P 2 Raw Idiff A	pu	Phase current unbalance 2 raw phase A differential current actual value
13838	60P 2 Raw Idiff B	pu	Phase current unbalance 2 raw phase B differential current actual value

Table A–1: FLEXANALOG DATA ITEMS (Sheet 31 of 33)

DECIMAL ADDRESS	FLEXANALOG NAME	UNITS	DESCRIPTION
13840	60P 2 Raw Idiff C	pu	Phase current unbalance 2 raw phase C differential current actual value
13842	60P 2 Comp Iop A	pu	Phase current unbalance 2 composite phase A operating current actual value
13844	60P 2 Comp Iop B	pu	Phase current unbalance 2 composite phase B operating current actual value
13846	60P 2 Comp Iop C	pu	Phase current unbalance 2 composite phase C operating current actual value
13848	60P 3 Raw Idiff A	pu	Phase current unbalance 3 raw phase A differential current actual value
13850	60P 3 Raw Idiff B	pu	Phase current unbalance 3 raw phase B differential current actual value
13852	60P 3 Raw Idiff C	pu	Phase current unbalance 3 raw phase C differential current actual value
13854	60P 3 Comp Iop A	pu	Phase current unbalance 3 composite phase A operating current actual value
13856	60P 3 Comp Iop B	pu	Phase current unbalance 3 composite phase B operating current actual value
13858	60P 3 Comp Iop C	pu	Phase current unbalance 3 composite phase C operating current actual value
13888	87V 1 Bus Va	pu	Voltage differential 1 phase A bus voltage actual
13890	87V 1 Diff Va	pu	Voltage differential 1 phase A diff voltage actual
13892	87V 1 Diff Vb	pu	Voltage differential 1 phase B bus voltage actual
13894	87V 1 Diff Vb	pu	Voltage differential 1 phase B diff voltage actual
13896	87V 1 Bus Vc	pu	Voltage differential 1 phase C bus voltage actual
13898	87V 1 Diff Vc	pu	Voltage differential 1 phase C diff voltage actual
13900	87V 2 Bus Va	pu	Voltage differential 2 phase A bus voltage actual
13902	87V 2 Diff Va	pu	Voltage differential 2 phase A diff voltage actual
13904	87V 2 Bus Vb	pu	Voltage differential 2 phase B bus voltage actual
13906	87V 2 Diff Vb	pu	Voltage differential 2 phase B diff voltage actual
13908	87V 2 Bus Vc	pu	Voltage differential 2 phase C bus voltage actual
13910	87V 2 Diff Vc	pu	Voltage differential 2 phase C diff voltage actual
13912	87V 3 Bus Va	pu	Voltage differential 3 phase A bus voltage actual
13914	87V 3 Diff Va	pu	Voltage differential 3 phase A diff voltage actual
13916	87V 3 Bus Vb	pu	Voltage differential 3 phase B buss voltage actual
13918	87V 3 Diff Vb	pu	Voltage differential 3 phase B diff voltage actual
13920	87V 3 Bus Vc	pu	Voltage differential 3 phase C bus voltage actual
13922	87V 3 Diff Vc	pu	Voltage differential 3 phase C diff voltage actual
14020	60N 1 Raw INsp	pu	Neutral current unbalance 1 INsp actual value
14022	60N 1 Comp Iop	pu	Neutral current unbalance 1 Iop actual value
14024	60N 2 Raw INsp	pu	Neutral current unbalance 2 INsp actual value
14026	60N 2 Comp Iop	pu	Neutral current unbalance 2 Iop actual value
14028	60N 3 Raw INsp	pu	Neutral current unbalance 3 INsp actual value
14030	60N 3 Comp Iop	pu	Neutral current unbalance 3 Iop actual value
14064	59NU1Ntrl-p Vx Ang	Degrees	Neutral voltage unbalance 1 neutral-point Vx angle
14066	59NU1Bus V0 Ang	Degrees	Neutral voltage unbalance 1 neutral-point Vx bus V0 angle
14068	59NU1Bus V0 Mag	pu	Neutral voltage unbalance 1 neutral-point Vx bus V0 magnitude
14070	59NU1Ntrl-p Vx Mag	pu	Neutral voltage unbalance 1 neutral-point Vx magnitude
14072	59NU1Vop	pu	Neutral voltage unbalance 1 neutral-point Vx operating voltage
14074	59NU1Vrest	pu	Neutral voltage unbalance 1 neutral-point Vx restraining voltage
14076	59NU2Ntrl-p Vx Ang	Degrees	Neutral voltage unbalance 2 neutral-point Vx angle
14078	59NU2Bus V0 Ang	Degrees	Neutral voltage unbalance 2 neutral-point Vx bus V0 angle
14080	59NU2Bus V0 Mag	pu	Neutral voltage unbalance 2 neutral-point Vx bus V0 magnitude

Table A–1: FLEXANALOG DATA ITEMS (Sheet 32 of 33)

DECIMAL ADDRESS	FLEXANALOG NAME	UNITS	DESCRIPTION
14082	59NU2Ntrl-p Vx Mag	pu	Neutral voltage unbalance 2 neutral-point Vx magnitude
14084	59NU2Vop	pu	Neutral voltage unbalance 2 neutral-point Vx operating voltage
14086	59NU2Vrest	pu	Neutral voltage unbalance 2 neutral-point Vx restraining voltage
14088	59NU3Ntrl-p Vx Ang	Degrees	Neutral voltage unbalance 3 neutral-point Vx angle
14090	59NU3Bus V0 Ang	Degrees	Neutral voltage unbalance 3 neutral-point Vx bus V0 angle
14092	59NU3Bus V0 Mag	pu	Neutral voltage unbalance 3 neutral-point Vx bus V0 magnitude
14094	59NU3Ntrl-p Vx Mag	pu	Neutral voltage unbalance 3 neutral-point Vx magnitude
14096	59NU3Vop	pu	Neutral voltage unbalance 3 neutral-point Vx operating voltage
14098	59NU3Vrest	pu	Neutral voltage unbalance 3 neutral-point Vx restraining voltage
14112	SecondOfDay	---	Integer number of seconds past midnight (1000 seconds = 1 pu)
14114	DayOfMonth	---	Day of the current month (1 day = 1 pu)
14115	DayOfYear	---	Integer number of day of year (Julian date. 5 days = 1 pu)
14116	Year	---	Time of day, year (100 years = 1 pu)
14189	PTP–IRIG-B Delta	ns	PTP time minus IRIG-B time
14208	CAP 1 DISCHRG TIME	seconds	Capacitor control 1 discharge time in seconds
14209	CAP 2 DISCHRG TIME	seconds	Capacitor control 2 discharge time in seconds
14210	CAP 3 DISCHRG TIME	seconds	Capacitor control 3 discharge time in seconds
14211	CAP 4 DISCHRG TIME	seconds	Capacitor control 4 discharge time in seconds
24432	Communications Group	---	Groups communications group
24447	Active Setting Group	---	Current setting group
25488	59B 1 Vop A	pu	Bank overvoltage 1 Vop phase A
25489	59B 1 Vop B	pu	Bank overvoltage 1 Vop phase B
25490	59B 1 Vop C	pu	Bank overvoltage 1 Vop phase C
25491	59B 2 Vop A	pu	Bank overvoltage 2 Vop phase A
25492	59B 2 Vop B	pu	Bank overvoltage 2 Vop phase B
25493	59B 2 Vop C	pu	Bank overvoltage 2 Vop phase C
25494	59B 3 Vop A	pu	Bank overvoltage 3 Vop phase A
25495	59B 3 Vop B	pu	Bank overvoltage 3 Vop phase B
25496	59B 3 Vop C	pu	Bank overvoltage 3 Vop phase C
32768	Tracking Frequency	Hz	Tracking frequency
39168	FlexElement 1 Value	---	FlexElement 1 actual value
39170	FlexElement 2 Value	---	FlexElement 2 actual value
39172	FlexElement 3 Value	---	FlexElement 3 actual value
39174	FlexElement 4 Value	---	FlexElement 4 actual value
39176	FlexElement 5 Value	---	FlexElement 5 actual value
39178	FlexElement 6 Value	---	FlexElement 6 actual value
39180	FlexElement 7 Value	---	FlexElement 7 actual value
39182	FlexElement 8 Value	---	FlexElement 8 actual value
39184	FlexElement 9 Value	---	FlexElement 9 actual value
39186	FlexElement 10 Value	---	FlexElement 10 actual value
39188	FlexElement 11 Value	---	FlexElemen 11 actual value
39190	FlexElement 12 Value	---	FlexElement 12 actual value
39192	FlexElement 13 Value	---	FlexElement 13 actual value
39194	FlexElement 14 Value	---	FlexElement 14 actual value
39196	FlexElement 15 Value	---	FlexElement 15 actual value
39198	FlexElement 16 Value	---	FlexElement 16 actual value
41132	V0 3rd Harmonic 1	Volts	VTFF 1 V0 3rd Harmonic

Table A–1: FLEXANALOG DATA ITEMS (Sheet 33 of 33)

DECIMAL ADDRESS	FLEXANALOG NAME	UNITS	DESCRIPTION
41134	V0 3rd Harmonic 2	Volts	VTFF 2 V0 3rd Harmonic
41136	V0 3rd Harmonic 3	Volts	VTFF 3 V0 3rd Harmonic
41138	V0 3rd Harmonic 4	Volts	VTFF 4 V0 3rd Harmonic
41140	V0 3rd Harmonic 5	Volts	VTFF 5 V0 3rd Harmonic
41142	V0 3rd Harmonic 6	Volts	VTFF 6 V0 3rd Harmonic
45584	GOOSE Analog In 1	---	IEC 61850 GOOSE analog input 1
45586	GOOSE Analog In 2	---	IEC 61850 GOOSE analog input 2
45588	GOOSE Analog In 3	---	IEC 61850 GOOSE analog input 3
45590	GOOSE Analog In 4	---	IEC 61850 GOOSE analog input 4
45592	GOOSE Analog In 5	---	IEC 61850 GOOSE analog input 5
45594	GOOSE Analog In 6	---	IEC 61850 GOOSE analog input 6
45596	GOOSE Analog In 7	---	IEC 61850 GOOSE analog input 7
45598	GOOSE Analog In 8	---	IEC 61850 GOOSE analog input 8
45600	GOOSE Analog In 9	---	IEC 61850 GOOSE analog input 9
45602	GOOSE Analog In 10	---	IEC 61850 GOOSE analog input 10
45604	GOOSE Analog In 11	---	IEC 61850 GOOSE analog input 11
45606	GOOSE Analog In 12	---	IEC 61850 GOOSE analog input 12
45608	GOOSE Analog In 13	---	IEC 61850 GOOSE analog input 13
45610	GOOSE Analog In 14	---	IEC 61850 GOOSE analog input 14
45612	GOOSE Analog In 15	---	IEC 61850 GOOSE analog input 15
45614	GOOSE Analog In 16	---	IEC 61850 GOOSE analog input 16
45616	GOOSE Analog In 17	---	IEC 61850 GOOSE analog input 17
45618	GOOSE Analog In 18	---	IEC 61850 GOOSE analog input 18
45620	GOOSE Analog In 19	---	IEC 61850 GOOSE analog input 19
45622	GOOSE Analog In 20	---	IEC 61850 GOOSE analog input 20
45624	GOOSE Analog In 21	---	IEC 61850 GOOSE analog input 21
45626	GOOSE Analog In 22	---	IEC 61850 GOOSE analog input 22
45628	GOOSE Analog In 23	---	IEC 61850 GOOSE analog input 23
45630	GOOSE Analog In 24	---	IEC 61850 GOOSE analog input 24
45632	GOOSE Analog In 25	---	IEC 61850 GOOSE analog input 25
45634	GOOSE Analog In 26	---	IEC 61850 GOOSE analog input 26
45636	GOOSE Analog In 27	---	IEC 61850 GOOSE analog input 27
45638	GOOSE Analog In 28	---	IEC 61850 GOOSE analog input 28
45640	GOOSE Analog In 29	---	IEC 61850 GOOSE analog input 29
45642	GOOSE Analog In 30	---	IEC 61850 GOOSE analog input 30
45644	GOOSE Analog In 31	---	IEC 61850 GOOSE analog input 31
45646	GOOSE Analog In 32	---	IEC 61850 GOOSE analog input 32

A.1.2 FLEXINTEGER ITEMS

FlexInteger items are also viewable in a web browser. In the browser, enter the IP address of the UR, access the **Device Information Menu** option, then the **FlexInteger Parameter Listing** option.

Table A–2: FLEXINTEGER DATA ITEMS

ADDRESS	FLEXINTEGER NAME	UNITS	DESCRIPTION
9968	GOOSE UInt Input 1	---	IEC61850 GOOSE UInteger input 1
9970	GOOSE UInt Input 2	---	IEC61850 GOOSE UInteger input 2
9972	GOOSE UInt Input 3	---	IEC61850 GOOSE UInteger input 3
9974	GOOSE UInt Input 4	---	IEC61850 GOOSE UInteger input 4
9976	GOOSE UInt Input 5	---	IEC61850 GOOSE UInteger input 5
9978	GOOSE UInt Input 6	---	IEC61850 GOOSE UInteger input 6
9980	GOOSE UInt Input 7	---	IEC61850 GOOSE UInteger input 7
9982	GOOSE UInt Input 8	---	IEC61850 GOOSE UInteger input 8
9984	GOOSE UInt Input 9	---	IEC61850 GOOSE UInteger input 9
9986	GOOSE UInt Input 10	---	IEC61850 GOOSE UInteger input 10
9988	GOOSE UInt Input 11	---	IEC61850 GOOSE UInteger input 11
9990	GOOSE UInt Input 12	---	IEC61850 GOOSE UInteger input 12
9992	GOOSE UInt Input 13	---	IEC61850 GOOSE UInteger input 13
9994	GOOSE UInt Input 14	---	IEC61850 GOOSE UInteger input 14
9996	GOOSE UInt Input 15	---	IEC61850 GOOSE UInteger input 15
9998	GOOSE UInt Input 16	---	IEC61850 GOOSE UInteger input 16

B.1.1 INTRODUCTION

The UR series supports several communications protocols to allow connection to equipment such as personal computers, remote terminal units (RTUs), supervisory control and data acquisition (SCADA) masters, and programmable logic controllers. The Modicon Modbus protocol is the most basic protocol supported by the UR. Modbus RTU is available via the RS232 and RS485 serial links, and Modbus TCP/IP is available over Ethernet. The following description is intended primarily for users who want to develop their own master communication drivers. Note that:

- The UR always acts as a slave device, meaning that it never initiates communications. It listens and responds to requests issued by a master computer.
- A subset of Modbus RTU and Modbus TCP/IP protocol format is supported that allows extensive monitoring, programming, and control functions using read and write register commands.

B.1.2 PHYSICAL LAYER

Each data byte is transmitted in an asynchronous format consisting of 1 start bit, 8 data bits, 1 stop bit, and possibly 1 parity bit. This produces a 10 or 11 bit data frame. This can be important for transmission through modems at high bit rates (11 bit data frames are not supported by many modems at baud rates greater than 300).

The faceplate RS232 port is intended for local use and is fixed at 19200 bit/s baud and even parity. The rear terminal RS485 port can be set for baud rates of 300, 1200, 2400, 4800, 9600, 14400, 19200, 28800, 33600, 38400, 57600, or 115200 bps, and even, odd, and no parity options are available. See the Communications section of chapter 5 for details.

The Modbus TCP/IP protocol is available on each of the rear Ethernet ports. These ports are 100Base-FX.

B.1.3 DATA LINK LAYER

Modbus RTU communications takes place in packets that are groups of asynchronously framed byte data. The master transmits a packet to the slave and the slave responds with a packet. The following information describes the general format for both transmit and receive packets. For details on packet formatting, see subsequent sections describing each function code.

Table B–1: MODBUS RTU PACKET FORMAT

DESCRIPTION	SIZE
SLAVE ADDRESS	1 byte
FUNCTION CODE	1 byte
DATA	N bytes
CRC	2 bytes
DEAD TIME	3.5 bytes transmission time

- **SLAVE ADDRESS:** This is the address of the slave device that is intended to receive the packet sent by the master and to perform the desired action. Each slave device on a communications bus must have a unique address to prevent bus contention. All of the relay's ports have the same address which is programmable from 1 to 254; see chapter 5 for details. Only the addressed slave will respond to a packet that starts with its address. Note that the faceplate port is an exception to this rule; it will act on a message containing any slave address.

  A master transmit packet with slave address 0 indicates a broadcast command. All slaves on the communication link take action based on the packet, but none respond to the master.
- **FUNCTION CODE:** This is one of the supported functions codes of the unit which tells the slave what action to perform. See the Supported Function Codes section for details. An exception response from the slave is indicated by setting the high order bit of the function code in the response packet. See the Exception Responses section for details.
- **DATA:** This will be a variable number of bytes depending on the function code. This may include actual values, settings, or addresses sent by the master to the slave or by the slave to the master.
- **CRC:** This is a two byte error checking code. The RTU version of Modbus includes a 16-bit cyclic redundancy check (CRC-16) with every packet which is an industry standard method used for error detection. If a Modbus slave device receives a packet in which an error is indicated by the CRC, the slave device does not act upon or respond to the

packet thus preventing any erroneous operations. See the CRC-16 Algorithm section for details on calculating the CRC.

- **DEAD TIME:** A packet is terminated when no data is received for a period of 3.5 byte transmission times (about 15 ms at 2400 bps, 2 ms at 19200 bps, and 300 µs at 115200 bps). Consequently, the transmitting device must not allow gaps between bytes longer than this interval. Once the dead time has expired without a new byte transmission, all slaves start listening for a new packet from the master except for the addressed slave.

Modbus-TCP/IP communications takes place in application data units (ADUs), which are wrapped in the TCP/IP/Ethernet protocols. Ethernet provides Layer 2 addressing and CRC-32 error checking. IP provides Layer 3 addressing. TCP provides communication establishment and ending and manages data flow. The Parallel Redundancy Protocol (PRP) can also be used to provide seamless data flow in case of a single failure in the network, by using a combination of LAN duplication and frame duplication. See chapter 5 in the instruction manual for information on setting up TCP for Modbus (in the Modbus section), IP and PRP (Network section).

The ADU is described as follows.

Table B–2: MODBUS TCP/IP FORMAT

DESCRIPTION		SIZE
MBAP header	Transaction identifier	2 bytes
	Protocol identifier	2 bytes
	Length	2 bytes
	Unit identifier	1 byte
FUNCTION CODE		1 byte
DATA		N bytes

MBAP header: This Modbus Application Protocol header contains the following fields:

- Transaction Identifier: Used for transaction pairing. The Modbus server copies in the response the transaction identifier of the request.
- Protocol Identifier: Used for intra-system multiplexing. The Modbus protocol is identified by the value 0.
- Length: The length field is a byte count of the following fields, including the Unit Identifier and data fields.
  - Unit Identifier: For the purposes of the UR, this field is equivalent to the Modbus RTU SLAVE ADDRESS field. The client must use the same value here as programmed in the UR setting **MODBUS SLAVE ADDRESS**.

FUNCTION CODE: This is the same as the Modbus RTU function code field described above.

DATA: This is the same as the Modbus RTU data field described above.

B.1.4 MODBUS RTU CRC-16 ALGORITHM

The Modbus TPC/IP CRC-32 algorithm is universally executed in hardware, so there is no need to describe it here.

The Modbus RTU CRC-16 algorithm essentially treats the entire data stream (data bits only; start, stop and parity ignored) as one continuous binary number. This number is first shifted left 16 bits and then divided by a characteristic polynomial (1100000000000101b). The 16-bit remainder of the division is appended to the end of the packet, MSByte first. The resulting packet including CRC, when divided by the same polynomial at the receiver will give a zero remainder if no transmission errors have occurred. This algorithm requires the characteristic polynomial to be reverse bit ordered. The most significant bit of the characteristic polynomial is dropped, since it does not affect the value of the remainder.

A C programming language implementation of the CRC algorithm will be provided upon request.

Table B–3: MODBUS RTU CRC-16 ALGORITHM

SYMBOLS:	-->	data transfer
	A	16 bit working register
	Alow	low order byte of A
	Ahigh	high order byte of A
	CRC	16 bit CRC-16 result
	i,j	loop counters
	(+)	logical EXCLUSIVE-OR operator
	N	total number of data bytes
	Di	i-th data byte (i = 0 to N-1)
	G	16 bit characteristic polynomial = 1010000000000001 (binary) with MSbit dropped and bit order reversed
	shr (x)	right shift operator (th LSbit of x is shifted into a carry flag, a '0' is shifted into the MSbit of x, all other bits are shifted right one location)

ALGORITHM:	1.	FFFF (hex) --> A	
	2.	0 --> i	
	3.	0 --> j	
	4.	Di (+) Alow --> Alow	
	5.	j + 1 --> j	
	6.	shr (A)	
	7.	Is there a carry?	No: go to 8; Yes: G (+) A --> A and continue.
	8.	Is j = 8?	No: go to 5; Yes: continue
	9.	i + 1 --> i	
	10.	Is i = N?	No: go to 3; Yes: continue
	11.	A --> CRC	

B.2.1 SUPPORTED FUNCTION CODES

Modbus officially defines function codes from 1 to 127 though only a small subset is generally needed. The relay supports some of these functions, as summarized in the following table. Subsequent sections describe each function code in detail.

FUNCTION CODE		MODBUS DEFINITION	GE MULTILIN DEFINITION
HEX	DEC		
03	3	Read holding registers	Read actual values or settings
04	4	Read holding registers	Read actual values or settings
05	5	Force single coil	Execute operation
06	6	Preset single register	Store single setting
10	16	Preset multiple registers	Store multiple settings

B.2.2 READ ACTUAL VALUES OR SETTINGS (FUNCTION CODE 03/04H)

This function code allows the master to read one or more consecutive data registers (actual values or settings) from a relay. The maximum number of registers that can be read in a single packet is 125. See the Modbus Memory Map table for exact details on the data registers.

Since some PLC implementations of Modbus only support one of function codes 03h and 04h. The UR interpretation allows either function code to be used for reading one or more consecutive data registers. The data starting address will determine the type of data being read. Function codes 03h and 04h are therefore identical.

The following table shows the format of the master and slave packets in Modbus RTU. Modbus TCP/IP ADUs have a MBAP instead of slave address, and CRC is in another stack layer. The example shows a master device requesting three register values starting at address 4050h from slave device 11h (17 decimal); the slave device responds with the values 40, 300, and 0 from registers 4050h, 4051h, and 4052h, respectively.

Table B–4: MASTER AND SLAVE DEVICE PACKET TRANSMISSION EXAMPLE

MASTER TRANSMISSION	
PACKET FORMAT	EXAMPLE (HEX)
SLAVE ADDRESS	11
FUNCTION CODE	04
DATA STARTING ADDRESS - high	40
DATA STARTING ADDRESS - low	50
NUMBER OF REGISTERS - high	00
NUMBER OF REGISTERS - low	03
CRC - low	A7
CRC - high	4A

SLAVE RESPONSE	
PACKET FORMAT	EXAMPLE (HEX)
SLAVE ADDRESS	11
FUNCTION CODE	04
BYTE COUNT	06
DATA #1 - high	00
DATA #1 - low	28
DATA #2 - high	01
DATA #2 - low	2C
DATA #3 - high	00
DATA #3 - low	00
CRC - low	0D
CRC - high	60

B.2.3 EXECUTE OPERATION (FUNCTION CODE 05H)

This function code allows the master to perform various operations in the relay. Available operations are shown in the Summary of Operation Codes table below.

The following table shows the format of the master and slave packets in Modbus RTU. Modbus TCP/IP ADUs have a MBAP instead of slave address, and CRC is in another stack layer. The example shows a master device requesting the slave device 11h (17 decimal) to perform a reset. The high and low code value bytes always have the values "FF" and "00" respectively and are a remnant of the original Modbus definition of this function code.

Table B–5: MASTER AND SLAVE DEVICE PACKET TRANSMISSION EXAMPLE

MASTER TRANSMISSION	
PACKET FORMAT	**EXAMPLE (HEX)**
SLAVE ADDRESS	11
FUNCTION CODE	05
OPERATION CODE - high	00
OPERATION CODE - low	01
CODE VALUE - high	FF
CODE VALUE - low	00
CRC - low	DF
CRC - high	6A

SLAVE RESPONSE	
PACKET FORMAT	**EXAMPLE (HEX)**
SLAVE ADDRESS	11
FUNCTION CODE	05
OPERATION CODE - high	00
OPERATION CODE - low	01
CODE VALUE - high	FF
CODE VALUE - low	00
CRC - low	DF
CRC - high	6A

Table B–6: SUMMARY OF OPERATION CODES FOR FUNCTION 05H

OPERATION CODE (HEX)	DEFINITION	DESCRIPTION
0000	NO OPERATION	Does not do anything.
0001	RESET	Performs the same function as the faceplate RESET key.
0005	CLEAR EVENT RECORDS	Performs the same function as the faceplate **CLEAR EVENT RECORDS** menu command.
0006	CLEAR OSCILLOGRAPHY	Clears all oscillography records.
1000 to 103F	VIRTUAL IN 1 to 64 ON/OFF	Sets the states of Virtual Inputs 1 to 64 either "ON" or "OFF".

B.2.4 STORE SINGLE SETTING (FUNCTION CODE 06H)

This function code allows the master to modify the contents of a single setting register in an relay. Setting registers are always 16 bit (two byte) values transmitted high order byte first. The following table shows the format of the master and slave packets in Modbus RTU. Modbus TCP/IP ADUs have a MBAP instead of slave address, and CRC is in another stack layer. The example shows a master device storing the value 200 at memory map address 4051h to slave device 11h (17 dec).

Table B–7: MASTER AND SLAVE DEVICE PACKET TRANSMISSION EXAMPLE

MASTER TRANSMISSION	
PACKET FORMAT	**EXAMPLE (HEX)**
SLAVE ADDRESS	11
FUNCTION CODE	06
DATA STARTING ADDRESS - high	40
DATA STARTING ADDRESS - low	51
DATA - high	00
DATA - low	C8
CRC - low	CE
CRC - high	DD

SLAVE RESPONSE	
PACKET FORMAT	**EXAMPLE (HEX)**
SLAVE ADDRESS	11
FUNCTION CODE	06
DATA STARTING ADDRESS - high	40
DATA STARTING ADDRESS - low	51
DATA - high	00
DATA - low	C8
CRC - low	CE
CRC - high	DD

B.2.5 STORE MULTIPLE SETTINGS (FUNCTION CODE 10H)

This function code allows the master to modify the contents of a one or more consecutive setting registers in a relay. Setting registers are 16-bit (two byte) values transmitted high order byte first. The maximum number of setting registers that can be stored in a single packet is 123. The following table shows the format of the master and slave packets in Modbus RTU. Modbus TCP/IP ADUs have a MBAP instead of slave address, and CRC is in another stack layer. The example shows a master device storing the value 200 at memory map address 4051h, and the value 1 at memory map address 4052h to slave device 11h (17 decimal).

Table B–8: MASTER AND SLAVE DEVICE PACKET TRANSMISSION EXAMPLE

MASTER TRANSMISSION	
PACKET FORMAT	**EXAMPLE (HEX)**
SLAVE ADDRESS	11
FUNCTION CODE	10
DATA STARTING ADDRESS - hi	40
DATA STARTING ADDRESS - lo	51
NUMBER OF SETTINGS - hi	00
NUMBER OF SETTINGS - lo	02
BYTE COUNT	04
DATA #1 - high order byte	00
DATA #1 - low order byte	C8
DATA #2 - high order byte	00
DATA #2 - low order byte	01
CRC - low order byte	12
CRC - high order byte	62

SLAVE RESPONSE	
PACKET FORMAT	**EXAMPLE (HEX)**
SLAVE ADDRESS	11
FUNCTION CODE	10
DATA STARTING ADDRESS - hi	40
DATA STARTING ADDRESS - lo	51
NUMBER OF SETTINGS - hi	00
NUMBER OF SETTINGS - lo	02
CRC - lo	07
CRC - hi	64

B.2.6 EXCEPTION RESPONSES

Programming or operation errors usually happen because of illegal data in a packet. These errors result in an exception response from the slave. The slave detecting one of these errors sends a response packet to the master with the high order bit of the function code set to 1.

The following table shows the format of the master and slave packets in Modbus RTU. Modbus TCP/IP ADUs have a MBAP instead of slave address, and CRC is in another stack layer. The example shows a master device sending the unsupported function code 39h to slave device 11h.

Table B–9: MASTER AND SLAVE DEVICE PACKET TRANSMISSION EXAMPLE

MASTER TRANSMISSION	
PACKET FORMAT	**EXAMPLE (HEX)**
SLAVE ADDRESS	11
FUNCTION CODE	39
CRC - low order byte	CD
CRC - high order byte	F2

SLAVE RESPONSE	
PACKET FORMAT	**EXAMPLE (HEX)**
SLAVE ADDRESS	11
FUNCTION CODE	B9
ERROR CODE	01
CRC - low order byte	93
CRC - high order byte	95

a) DESCRIPTION

The UR relay has a generic file transfer facility, meaning that you use the same method to obtain all of the different types of files from the unit. The Modbus registers that implement file transfer are found in the "Modbus File Transfer (Read/Write)" and "Modbus File Transfer (Read Only)" modules, starting at address 3100h in the Modbus Memory Map. To read a file from the UR relay, use the following steps:

1. Write the filename to the "Name of file to read" register using a write multiple registers command. If the name is shorter than 80 characters, you may write only enough registers to include all the text of the filename. Filenames are not case sensitive.
2. Repeatedly read all the registers in "Modbus File Transfer (Read Only)" using a read multiple registers command. It is not necessary to read the entire data block, since the UR relay will remember which was the last register you read. The "position" register is initially zero and thereafter indicates how many bytes (2 times the number of registers) you have read so far. The "size of..." register indicates the number of bytes of data remaining to read, to a maximum of 244.
3. Keep reading until the "size of..." register is smaller than the number of bytes you are transferring. This condition indicates end of file. Discard any bytes you have read beyond the indicated block size.
4. If you need to re-try a block, read only the "size of.." and "block of data", without reading the position. The file pointer is only incremented when you read the position register, so the same data block will be returned as was read in the previous operation. On the next read, check to see if the position is where you expect it to be, and discard the previous block if it is not (this condition would indicate that the UR relay did not process your original read request).

The UR relay retains connection-specific file transfer information, so files may be read simultaneously on multiple Modbus connections.

b) OTHER PROTOCOLS

All the files available via Modbus may also be retrieved using the standard file transfer mechanisms in other protocols (for example, TFTP or MMS).

c) COMTRADE, OSCILLOGRAPHY, AND DATA LOGGER FILES

Oscillography and data logger files are formatted using the COMTRADE file format per IEEE C37.111-1999 Standard Common Format for Transient Data Exchange (COMTRADE) for Power Systems. The files can be obtained in either text or binary COMTRADE format.

d) READING OSCILLOGRAPHY FILES

Familiarity with the oscillography feature is required to understand the following description. See the *Oscillography* section in chapter 5 for details.

The "Oscillography Number of Triggers" register increments by one every time a new oscillography file is triggered (captured) and cleared to zero when oscillography data is cleared. When a new trigger occurs, the associated oscillography file is assigned a file identifier number equal to the incremented value of this register; the newest file number is equal to the "Oscillography Number of Triggers" register. This register can be used to determine if any new data has been captured by periodically reading it to see if the value has changed; if the number has increased then new data is available.

The "Oscillography Number of Records" register specifies the maximum number of files (and the number of cycles of data per file) that can be stored in memory of the relay. The "Oscillography Available Records" register specifies the actual number of files that are stored and still available to be read out of the relay.

Writing “Yes” (that is, the value 1) to the "Oscillography Clear Data" register clears oscillography data files, clears both the "Oscillography Number of Triggers" and "Oscillography Available Records" registers to zero, and sets the "Oscillography Last Cleared Date" to the present date and time.

To read binary COMTRADE oscillography files, read the following filenames:

`OSCnnnn.CFG` and `OSCnnn.DAT`

e) READING DATA LOGGER FILES

Familiarity with the data logger feature is required to understand this description. Refer to the Data Logger section of Chapter 5 for details. To read the entire data logger in binary COMTRADE format, read the following files.

datalog.cfg and datalog.dat

To read the entire data logger in ASCII COMTRADE format, read the following files.

dataloga.cfg and dataloga.dat

To limit the range of records to be returned in the COMTRADE files, append the following to the filename before writing it:

- To read from a specific time to the end of the log: <space> startTime
- To read a specific range of records: <space> startTime <space> endTime
- Replace <startTime> and <endTime> with the number of seconds since Jan. 1 1970 as numeric text

f) READING EVENT RECORDER FILES

To read the entire event recorder contents in ASCII format (the only available format), use the following filename:

EVT.TXT

To read from a specific record to the end of the log, use the following filename:

EVTnnn.TXT (replace nnn with the desired starting record number)

To read from a specific record to another specific record, use the following filename:

EVT.TXT xxxxx yyyyy (replace xxxxx with the starting record number and yyyyy with the ending record number)

B.4.1 MODBUS MEMORY MAP

The table provides the Modbus memory map. The addresses in the table are expressed in hexadecimal. The particular registers actually present depend on the UR product and on the order codes software and module options.

The map is also viewable in a web browser. In the browser, enter the IP address of the UR and click the option.

In the table, "Grouped Setting" refers to content in the **Settings > Grouped Elements > Group** menus.

The data format tables that follow the memory map provide more information for some entries.

Table B–10: MODBUS MEMORY MAP (Sheet 1 of 65)

ADDR	REGISTER NAME	RANGE	UNITS	STEP	FORMAT	DEFAULT
Product Information (Read Only)						
0000	UR Product Type	0 to 65535	---	1	F001	0
0002	Product Version	0 to 655.35	---	0.01	F001	1
0003	Boot Configuration Register	0 to 65535	---	1	F001	0
Product Information (Read Only -- Written by Factory)						
0010	Serial Number	---	---	---	F203	“0”
0020	Manufacturing Date	0 to 4294967295	---	1	F050	0
0022	Modification Number	0 to 65535	---	1	F001	0
0040	Order Code	---	---	---	F204	“Order Code x”
0090	Ethernet MAC Address	---	---	---	F072	0
0093	Reserved (13 items)	---	---	---	F001	0
00A0	CPU Module Serial Number	---	---	---	F203	(none)
00B0	CPU Supplier Serial Number	---	---	---	F203	(none)
00C0	Ethernet Sub Module Serial Number (8 items)	---	---	---	F203	(none)
Product Information (Read Only -- Written by Factory)						
0110	FPGA Version	---	---	---	F206	(none)
0113	FPGA Date	0 to 4294967295	--	1	F050	0
Product Information (Read/Write)						
0120	Undefined	0 to 1	---	1	F102	0
Self Test Targets (Read Only)						
0200	Self Test States (4 items)	0 to 4294967295	0	1	F143	0
Front Panel (Read Only)						
0208	LED Column *n* State, *n* = 1 to 10 (10 items)	0 to 65535	---	1	F501	0
0220	Display Message	---	---	---	F204	(none)
0248	Last Key Pressed	0 to 47	---	1	F530	0 (None)
Keypress Emulation (Read/Write)						
0280	Simulated keypress -- write zero before each keystroke	0 to 46	---	1	F190	0 (No key -- use between real keys)
Virtual Input Commands (Read/Write Command) (64 modules)						
0400	Virtual Input 1 State	0 to 1	---	1	F108	0 (Off)
0401	Virtual Input 2 State	0 to 1	---	1	F108	0 (Off)
0402	Virtual Input 3 State	0 to 1	---	1	F108	0 (Off)
0403	Virtual Input 4 State	0 to 1	---	1	F108	0 (Off)
0404	Virtual Input 5 State	0 to 1	---	1	F108	0 (Off)
0405	Virtual Input 6 State	0 to 1	---	1	F108	0 (Off)
0406	Virtual Input 7 State	0 to 1	---	1	F108	0 (Off)
0407	Virtual Input 8 State	0 to 1	---	1	F108	0 (Off)
0408	Virtual Input 9 State	0 to 1	---	1	F108	0 (Off)
0409	Virtual Input 10 State	0 to 1	---	1	F108	0 (Off)
040A	Virtual Input 11 State	0 to 1	---	1	F108	0 (Off)
040B	Virtual Input 12 State	0 to 1	---	1	F108	0 (Off)
040C	Virtual Input 13 State	0 to 1	---	1	F108	0 (Off)
040D	Virtual Input 14 State	0 to 1	---	1	F108	0 (Off)
040E	Virtual Input 15 State	0 to 1	---	1	F108	0 (Off)

Table B–10: MODBUS MEMORY MAP (Sheet 2 of 65)

ADDR	REGISTER NAME	RANGE	UNITS	STEP	FORMAT	DEFAULT
040F	Virtual Input 16 State	0 to 1	---	1	F108	0 (Off)
0410	Virtual Input 17 State	0 to 1	---	1	F108	0 (Off)
0411	Virtual Input 18 State	0 to 1	---	1	F108	0 (Off)
0412	Virtual Input 19 State	0 to 1	---	1	F108	0 (Off)
0413	Virtual Input 20 State	0 to 1	---	1	F108	0 (Off)
0414	Virtual Input 21 State	0 to 1	---	1	F108	0 (Off)
0415	Virtual Input 22 State	0 to 1	---	1	F108	0 (Off)
0416	Virtual Input 23 State	0 to 1	---	1	F108	0 (Off)
0417	Virtual Input 24 State	0 to 1	---	1	F108	0 (Off)
0418	Virtual Input 25 State	0 to 1	---	1	F108	0 (Off)
0419	Virtual Input 26 State	0 to 1	---	1	F108	0 (Off)
041A	Virtual Input 27 State	0 to 1	---	1	F108	0 (Off)
041B	Virtual Input 28 State	0 to 1	---	1	F108	0 (Off)
041C	Virtual Input 29 State	0 to 1	---	1	F108	0 (Off)
041D	Virtual Input 30 State	0 to 1	---	1	F108	0 (Off)
041E	Virtual Input 31 State	0 to 1	---	1	F108	0 (Off)
041F	Virtual Input 32 State	0 to 1	---	1	F108	0 (Off)
0420	Virtual Input 33 State	0 to 1	---	1	F108	0 (Off)
0421	Virtual Input 34 State	0 to 1	---	1	F108	0 (Off)
0422	Virtual Input 35 State	0 to 1	---	1	F108	0 (Off)
0423	Virtual Input 36 State	0 to 1	---	1	F108	0 (Off)
0424	Virtual Input 37 State	0 to 1	---	1	F108	0 (Off)
0425	Virtual Input 38 State	0 to 1	---	1	F108	0 (Off)
0426	Virtual Input 39 State	0 to 1	---	1	F108	0 (Off)
0427	Virtual Input 40 State	0 to 1	---	1	F108	0 (Off)
0428	Virtual Input 41 State	0 to 1	---	1	F108	0 (Off)
0429	Virtual Input 42 State	0 to 1	---	1	F108	0 (Off)
042A	Virtual Input 43 State	0 to 1	---	1	F108	0 (Off)
042B	Virtual Input 44 State	0 to 1	---	1	F108	0 (Off)
042C	Virtual Input 45 State	0 to 1	---	1	F108	0 (Off)
042D	Virtual Input 46 State	0 to 1	---	1	F108	0 (Off)
042E	Virtual Input 47 State	0 to 1	---	1	F108	0 (Off)
042F	Virtual Input 48 State	0 to 1	---	1	F108	0 (Off)
0430	Virtual Input 49 State	0 to 1	---	1	F108	0 (Off)
0431	Virtual Input 50 State	0 to 1	---	1	F108	0 (Off)
0432	Virtual Input 51 State	0 to 1	---	1	F108	0 (Off)
0433	Virtual Input 52 State	0 to 1	---	1	F108	0 (Off)
0434	Virtual Input 53 State	0 to 1	---	1	F108	0 (Off)
0435	Virtual Input 54 State	0 to 1	---	1	F108	0 (Off)
0436	Virtual Input 55 State	0 to 1	---	1	F108	0 (Off)
0437	Virtual Input 56 State	0 to 1	---	1	F108	0 (Off)
0438	Virtual Input 57 State	0 to 1	---	1	F108	0 (Off)
0439	Virtual Input 58 State	0 to 1	---	1	F108	0 (Off)
043A	Virtual Input 59 State	0 to 1	---	1	F108	0 (Off)
043B	Virtual Input 60 State	0 to 1	---	1	F108	0 (Off)
043C	Virtual Input 61 State	0 to 1	---	1	F108	0 (Off)
043D	Virtual Input 62 State	0 to 1	---	1	F108	0 (Off)
043E	Virtual Input 63 State	0 to 1	---	1	F108	0 (Off)
043F	Virtual Input 64 State	0 to 1	---	1	F108	0 (Off)
IEC103 Protocol Settings (Read/Write Setting)						
0582	IEC103 Common ASDU Address	0 to 254	---	1	F001	0
0583	IEC103 Sync Timeout	1 to 1440	min	1	F001	1
IEC 103 Binary Inputs (Read/Write Setting) (96 modules)						
0584	IEC103 Binary Input 1 FUN	0 to 255	---	1	F001	0

Table B–10: MODBUS MEMORY MAP (Sheet 3 of 65)

ADDR	REGISTER NAME	RANGE	UNITS	STEP	FORMAT	DEFAULT
0585	IEC103 Binary Input 1 INF	0 to 255	---	1	F001	0
0586	IEC103 Binary Input 1 Operand	0 to 4294967295	---	1	F300	0
0588	...Repeated for Binary Input 2					
058C	...Repeated for Binary Input 3					
0590	...Repeated for Binary Input 4					
0594	...Repeated for Binary Input 5					
0598	...Repeated for Binary Input 6					
059C	...Repeated for Binary Input 7					
05A0	...Repeated for Binary Input 8					
05A4	...Repeated for Binary Input 9					
05A8	...Repeated for Binary Input 10					
05AC	...Repeated for Binary Input 11					
05B0	...Repeated for Binary Input 12					
05B4	...Repeated for Binary Input 13					
05B8	...Repeated for Binary Input 14					
05BC	...Repeated for Binary Input 15					
05C0	...Repeated for Binary Input 16					
05C4	...Repeated for Binary Input 17					
05C8	...Repeated for Binary Input 18					
05CC	...Repeated for Binary Input 19					
05D0	...Repeated for Binary Input 20					
05D4	...Repeated for Binary Input 21					
05D8	...Repeated for Binary Input 22					
05DC	...Repeated for Binary Input 23					
05E0	...Repeated for Binary Input 24					
05E4	...Repeated for Binary Input 25					
05E8	...Repeated for Binary Input 26					
05EC	...Repeated for Binary Input 27					
05F0	...Repeated for Binary Input 28					
05F4	...Repeated for Binary Input 29					
05F8	...Repeated for Binary Input 30					
05FC	...Repeated for Binary Input 31					
0600	...Repeated for Binary Input 32					
0604	...Repeated for Binary Input 33					
0608	...Repeated for Binary Input 34					
060C	...Repeated for Binary Input 35					
0610	...Repeated for Binary Input 36					
0614	...Repeated for Binary Input 37					
0618	...Repeated for Binary Input 38					
061C	...Repeated for Binary Input 39					
0620	...Repeated for Binary Input 40					
0624	...Repeated for Binary Input 41					
0628	...Repeated for Binary Input 42					
062C	...Repeated for Binary Input 43					
0630	...Repeated for Binary Input 44					
0634	...Repeated for Binary Input 45					
0638	...Repeated for Binary Input 46					
063C	...Repeated for Binary Input 47					
0640	...Repeated for Binary Input 48					
0644	...Repeated for Binary Input 49					
0648	...Repeated for Binary Input 50					
064C	...Repeated for Binary Input 51					
0650	...Repeated for Binary Input 52					
0654	...Repeated for Binary Input 53					

Table B–10: MODBUS MEMORY MAP (Sheet 4 of 65)

ADDR	REGISTER NAME	RANGE	UNITS	STEP	FORMAT	DEFAULT
0658	...Repeated for Binary Input 54					
065C	...Repeated for Binary Input 55					
0660	...Repeated for Binary Input 56					
0664	...Repeated for Binary Input 57					
0668	...Repeated for Binary Input 58					
066C	...Repeated for Binary Input 59					
0670	...Repeated for Binary Input 60					
0674	...Repeated for Binary Input 61					
0678	...Repeated for Binary Input 62					
067C	...Repeated for Binary Input 63					
0680	...Repeated for Binary Input 64					
0684	...Repeated for Binary Input 65					
0688	...Repeated for Binary Input 66					
068C	...Repeated for Binary Input 67					
0690	...Repeated for Binary Input 68					
0694	...Repeated for Binary Input 69					
0698	...Repeated for Binary Input 70					
069C	...Repeated for Binary Input 71					
06A0	...Repeated for Binary Input 72					
06A4	...Repeated for Binary Input 73					
06A8	...Repeated for Binary Input 74					
06AC	...Repeated for Binary Input 75					
06B0	...Repeated for Binary Input 76					
06B4	...Repeated for Binary Input 77					
06B8	...Repeated for Binary Input 78					
06BC	...Repeated for Binary Input 79					
06C0	...Repeated for Binary Input 80					
06C4	...Repeated for Binary Input 81					
06C8	...Repeated for Binary Input 82					
06CC	...Repeated for Binary Input 83					
06D0	...Repeated for Binary Input 84					
06D4	...Repeated for Binary Input 85					
06D8	...Repeated for Binary Input 86					
06DC	...Repeated for Binary Input 87					
06E0	...Repeated for Binary Input 88					
06E4	...Repeated for Binary Input 89					
06E8	...Repeated for Binary Input 90					
06EC	...Repeated for Binary Input 91					
06F0	...Repeated for Binary Input 92					
06F4	...Repeated for Binary Input 93					
06F8	...Repeated for Binary Input 94					
06FC	...Repeated for Binary Input 95					
0700	...Repeated for Binary Input 96					
IEC 103 ASDU Settings (Read/Write Setting) (4 modules)						
0704	IEC103 ASDU1 TYP	0 to 1	---	1	F630	1(9)
0705	IEC103 ASDU 1 FUN	0 to 255	---	1	F001	0
0706	IEC103 ASDU 1 INF	0 to 255	---	1	F001	0
0707	IEC103 ASDU 1 Scan Timeout	0 to 1000	---	1	F001	0
0708	IEC103 ASDU 1 Analog Param 1	0 to 65535	---	1	F600	0
0709	IEC103 ASDU 1 Analog Factor 1	0 to 65.535	---	0.001	F001	1000
070A	IEC103 ASDU 1 Analog Offset 1	-32768 to 32767	---	1	F002	0
070B	IEC103 ASDU 1 Analog Param 2	0 to 65535	---	1	F600	0
070C	IEC103 ASDU 1 Analog Factor 2	0 to 65.535	---	0.001	F001	1000
070D	IEC103 ASDU 1 Analog Offset 2	-32768 to 32767	---	1	F002	0

Table B–10: MODBUS MEMORY MAP (Sheet 5 of 65)

ADDR	REGISTER NAME	RANGE	UNITS	STEP	FORMAT	DEFAULT
070E	IEC103 ASDU 1 Analog Param 3	0 to 65535	---	1	F600	0
070F	IEC103 ASDU 1 Analog Factor 3	0 to 65.535	---	0.001	F001	1000
0710	IEC103 ASDU 1 Analog Offset 3	-32768 to 32767	---	1	F002	0
0711	IEC103 ASDU 1 Analog Param 4	0 to 65535	---	1	F600	0
0712	IEC103 ASDU 1 Analog Factor 4	0 to 65.535	---	0.001	F001	1000
0713	IEC103 ASDU 1 Analog Offset 4	-32768 to 32767	---	1	F002	0
0714	IEC103 ASDU 1 Analog Param 5	0 to 65535	---	1	F600	0
0715	IEC103 ASDU 1 Analog Factor 5	0 to 65.535	---	0.001	F001	1000
0716	IEC103 ASDU 1 Analog Offset 5	-32768 to 32767	---	1	F002	0
0717	IEC103 ASDU 1 Analog Param 6	0 to 65535	---	1	F600	0
0718	IEC103 ASDU 1 Analog Factor 6	0 to 65.535	---	0.001	F001	1000
0719	IEC103 ASDU 1 Analog Offset 6	-32768 to 32767	---	1	F002	0
071A	IEC103 ASDU 1 Analog Param 7	0 to 65535	---	1	F600	0
071B	IEC103 ASDU 1 Analog Factor 7	0 to 65.535	---	0.001	F001	1000
071C	IEC103 ASDU 1 Analog Offset 7	-32768 to 32767	---	1	F002	0
071D	IEC103 ASDU 1 Analog Param 8	0 to 65535	---	1	F600	0
071E	IEC103 ASDU 1 Analog Factor 8	0 to 65.535	---	0.001	F001	1000
071F	IEC103 ASDU 1 Analog Offset 8	-32768 to 32767	---	1	F002	0
0720	IEC103 ASDU 1 Analog Param 9	0 to 65535	---	1	F600	0
0721	IEC103 ASDU 1 Analog Factor 9	0 to 65.535	---	0.001	F001	1000
0722	IEC103 ASDU 1 Analog Offset 9	-32768 to 32767	---	1	F002	0
0723	...Repeated for IEC103 ASDU 2					
0742	...Repeated for IEC103 ASDU 3					
0761	...Repeated for IEC103 ASDU 4					
IEC 103 Commands (Read/Write Setting) (32 modules)						
0780	IEC103 Command 1 FUN	0 to 255	---	1	F001	0
0781	IEC103 Command 1 INF	0 to 255	---	1	F001	0
0782	IEC103 Command 1 Param ON	0 to 64	---	1	F631	0 (OFF)
0783	IEC103 Command 1 Param OFF	0 to 64	---	1	F631	0 (OFF)
0784	...Repeated for IEC103 Command 2					
0788	...Repeated for IEC103 Command 3					
078C	...Repeated for IEC103 Command 4					
0790	...Repeated for IEC103 Command 5					
0794	...Repeated for IEC103 Command 6					
0798	...Repeated for IEC103 Command 7					
079C	...Repeated for IEC103 Command 8					
07A0	...Repeated for IEC103 Command 9					
07A4	...Repeated for IEC103 Command 10					
07A8	...Repeated for IEC103 Command 11					
07AC	...Repeated for IEC103 Command 12					
07B0	...Repeated for IEC103 Command 13					
07B4	...Repeated for IEC103 Command 14					
07B8	...Repeated for IEC103 Command 15					
07BC	...Repeated for IEC103 Command 16					
07C0	...Repeated for IEC103 Command 17					
07C4	...Repeated for IEC103 Command 18					
07C8	...Repeated for IEC103 Command 19					
07CC	...Repeated for IEC103 Command 20					
07D0	...Repeated for IEC103 Command 21					
07D4	...Repeated for IEC103 Command 22					
07D8	...Repeated for IEC103 Command 23					
07DC	...Repeated for IEC103 Command 24					
07E0	...Repeated for IEC103 Command 25					
07E4	...Repeated for IEC103 Command 26					

Table B–10: MODBUS MEMORY MAP (Sheet 6 of 65)

ADDR	REGISTER NAME	RANGE	UNITS	STEP	FORMAT	DEFAULT
07E8	...Repeated for IEC103 Command 27					
07EC	...Repeated for IEC103 Command 28					
07F0	...Repeated for IEC103 Command 29					
07F4	...Repeated for IEC103 Command 30					
07F8	...Repeated for IEC103 Command 31					
07FC	...Repeated for IEC103 Command 32					
Digital Counter States Actual Values (Read Only Non-Volatile) (8 modules)						
0800	Digital Counter 1 Value	-2147483647 to 2147483647	---	1	F004	0
0802	Digital Counter 1 Frozen	-2147483647 to 2147483647	---	1	F004	0
0804	Digital Counter 1 Frozen Time Stamp	0 to 4294967295	---	1	F050	0
0806	Digital Counter 1 Frozen Time Stamp µs (microsecond part of time stamp)	0 to 4294967295	---	1	F003	0
0808	...Repeated for Digital Counter 2					
0810	...Repeated for Digital Counter 3					
0818	...Repeated for Digital Counter 4					
0820	...Repeated for Digital Counter 5					
0828	...Repeated for Digital Counter 6					
0830	...Repeated for Digital Counter 7					
0838	...Repeated for Digital Counter 8					
FlexStates (Read Only)						
0900	FlexState Bits (16 items)	0 to 65535	---	1	F001	0
Element States (Read Only)						
1000	Element Operate States (64 items)	0 to 65535	---	1	F502	0
User Displays Actuals (Read Only)						
1080	Formatted user-definable displays (16 items)	---	---	---	F200	(none)
Modbus User Map Actuals (Read Only)						
1200	User Map Values (256 items)	0 to 65535	---	1	F001	0
Element Targets (Read Only)						
14E0	Target Sequence	0 to 65535	---	1	F001	0
14E1	Number of Targets	0 to 65535	---	1	F001	0
Element Targets (Read/Write)						
14E2	Target to Read	0 to 65535	---	1	F001	0
Element Targets (Read Only)						
14E3	Target Message	---	---	---	F200	"."
Contact Input/Output States (Read Only)						
1500	Contact Input States (6 items)	0 to 65535	---	1	F500	0
1508	Virtual Input States (8 items)	0 to 65535	---	1	F500	0
1510	Contact Output States (4 items)	0 to 65535	---	1	F500	0
1518	Contact Output Current States (4 items)	0 to 65535	---	1	F500	0
1520	Contact Output Voltage States (4 items)	0 to 65535	---	1	F500	0
1528	Virtual Output States (6 items)	0 to 65535	---	1	F500	0
1530	Contact Output Detectors (4 items)	0 to 65535	---	1	F500	0
Remote Input/Output States (Read Only)						
1540	Remote Device States (2 items)	0 to 65535	---	1	F500	0
1542	Remote Input States (4 items)	0 to 65535	---	1	F500	0
1550	Remote Devices Online	0 to 1	---	1	F126	0 (No)
1551	Remote Double-Point Status Input 1 State	0 to 3	---	1	F605	3 (Bad)
1552	Remote Double-Point Status Input 2 State	0 to 3	---	1	F605	3 (Bad)
1553	Remote Double-Point Status Input 3 State	0 to 3	---	1	F605	3 (Bad)
1554	Remote Double-Point Status Input 4 State	0 to 3	---	1	F605	3 (Bad)
1555	Remote Double-Point Status Input 5 State	0 to 3	---	1	F605	3 (Bad)
Platform Direct Input/Output States (Read Only)						
15C0	Direct Input States (6 items)	0 to 65535	---	1	F500	0

Table B–10: MODBUS MEMORY MAP (Sheet 7 of 65)

ADDR	REGISTER NAME	RANGE	UNITS	STEP	FORMAT	DEFAULT
15C8	Direct Outputs Average Message Return Time 1	0 to 65535	ms	1	F001	0
15C9	Direct Outputs Average Message Return Time 2	0 to 65535	ms	1	F001	0
15CA	Direct Inputs/Outputs Unreturned Message Count - Ch. 1	0 to 65535	---	1	F001	0
15CB	Direct Inputs/Outputs Unreturned Message Count - Ch. 2	0 to 65535	---	1	F001	0
15D0	Direct Device States	0 to 65535	---	1	F500	0
15D1	Reserved	0 to 65535	---	1	F001	0
15D2	Direct Inputs/Outputs CRC Fail Count 1	0 to 65535	---	1	F001	0
15D3	Direct Inputs/Outputs CRC Fail Count 2	0 to 65535	---	1	F001	0
Field Unit Input/Output States (Read Only)						
15E0	Field Unit Contact Input States (3 items)	0 to 65535	---	1	F500	0
15E3	Field Unit Contact Input Output Operand States (8 items)	0 to 65535	---	1	F500	0
15EB	Field Contact Output Physical States (8 items)	0 to 65535	---	1	F500	0
15F3	Field Contact Output Current States (8 items)	0 to 65535	---	1	F500	0
15FB	Field Contact Output Physical States (8 items)	0 to 65535	---	1	F500	0
1603	Field Shared Input States	0 to 65535	---	1	F500	0
1604	Field Shared Input Channel States	0 to 65535	---	1	F500	0
1605	Field Shared Input Test States	0 to 65535	---	1	F500	0
1606	Field Shared Output Operand States	0 to 65535	---	1	F500	0
1607	Field Latching Output Open Operand States	0 to 65535	---	1	F500	0
1608	Field Latching Output Close Operand States	0 to 65535	---	1	F500	0
1609	Field Latching Output Open Driver States	0 to 65535	---	1	F500	0
160A	Field Latching Output Close Driver States	0 to 65535	---	1	F500	0
160B	Field Latching Output Physical States	0 to 65535	---	1	F500	0
160C	Field Unit Online/Offline States	0 to 65535	---	1	F500	0
160D	Field RTD Input Trouble States	0 to 65535	---	1	F500	0
160E	Field Transducer Input Trouble States	0 to 65535	---	1	F500	0
Ethernet Fibre Channel Status (Read Only)						
1610	Ethernet Primary Fibre Channel Status	0 to 2	---	1	F134	0 (Fail)
1611	Ethernet Secondary Fibre Channel Status	0 to 2	---	1	F134	0 (Fail)
1612	Ethernet Tertiary Fibre Channel Status	0 to 2	---	1	F134	0 (Fail)
Data Logger Actual Values (Read Only)						
1618	Data Logger Channel Count	0 to 16	channel	1	F001	0
1619	Time of Oldest Available Samples	0 to 4294967295	seconds	1	F050	0
161B	Time of Newest Available Samples	0 to 4294967295	seconds	1	F050	0
161D	Data Logger Duration	0 to 999.9	days	0.1	F001	0
Field Unit RTD Actuals (Read Only) (8 modules)						
16C0	Field RTD 1 Value	-32768 to 32767	°C	1	F002	0
16C1	...Repeated for Field RTD 2					
16C2	...Repeated for Field RTD 3					
16C3	...Repeated for Field RTD 4					
16C4	...Repeated for Field RTD 5					
16C5	...Repeated for Field RTD 6					
16C6	...Repeated for Field RTD 7					
16C7	...Repeated for Field RTD 8					
Field Unit Transducer Actuals (Read Only) (8 modules)						
16C8	Field Transducer 1 Value	-32.768 to 32.767	---	0.001	F004	0
16CA	...Repeated for Field Transducer 2					
16CC	...Repeated for Field Transducer 3					
16CE	...Repeated for Field Transducer 4					
16D0	...Repeated for Field Transducer 5					
16D2	...Repeated for Field Transducer 6					
16D4	...Repeated for Field Transducer 7					
16D6	...Repeated for Field Transducer 8					

Table B–10: MODBUS MEMORY MAP (Sheet 8 of 65)

ADDR	REGISTER NAME	RANGE	UNITS	STEP	FORMAT	DEFAULT
Source Current (Read Only) (6 modules)						
1800	Source 1 Phase A Current RMS	0 to 999999.999	A	0.001	F060	0
1802	Source 1 Phase B Current RMS	0 to 999999.999	A	0.001	F060	0
1804	Source 1 Phase C Current RMS	0 to 999999.999	A	0.001	F060	0
1806	Source 1 Neutral Current RMS	0 to 999999.999	A	0.001	F060	0
1808	Source 1 Phase A Current Magnitude	0 to 999999.999	A	0.001	F060	0
180A	Source 1 Phase A Current Angle	-359.9 to 0	degrees	0.1	F002	0
180B	Source 1 Phase B Current Magnitude	0 to 999999.999	A	0.001	F060	0
180D	Source 1 Phase B Current Angle	-359.9 to 0	degrees	0.1	F002	0
180E	Source 1 Phase C Current Magnitude	0 to 999999.999	A	0.001	F060	0
1810	Source 1 Phase C Current Angle	-359.9 to 0	degrees	0.1	F002	0
1811	Source 1 Neutral Current Magnitude	0 to 999999.999	A	0.001	F060	0
1813	Source 1 Neutral Current Angle	-359.9 to 0	degrees	0.1	F002	0
1814	Source 1 Ground Current RMS	0 to 999999.999	A	0.001	F060	0
1816	Source 1 Ground Current Magnitude	0 to 999999.999	A	0.001	F060	0
1818	Source 1 Ground Current Angle	-359.9 to 0	degrees	0.1	F002	0
1819	Source 1 Zero Sequence Current Magnitude	0 to 999999.999	A	0.001	F060	0
181B	Source 1 Zero Sequence Current Angle	-359.9 to 0	degrees	0.1	F002	0
181C	Source 1 Positive Sequence Current Magnitude	0 to 999999.999	A	0.001	F060	0
181E	Source 1 Positive Sequence Current Angle	-359.9 to 0	degrees	0.1	F002	0
181F	Source 1 Negative Sequence Current Magnitude	0 to 999999.999	A	0.001	F060	0
1821	Source 1 Negative Sequence Current Angle	-359.9 to 0	degrees	0.1	F002	0
1822	Source 1 Differential Ground Current Magnitude	0 to 999999.999	A	0.001	F060	0
1824	Source 1 Differential Ground Current Angle	-359.9 to 0	degrees	0.1	F002	0
1825	Reserved (27 items)	---	---	---	F001	0
1840	...Repeated for Source 2					
1880	...Repeated for Source 3					
18C0	...Repeated for Source 4					
1900	...Repeated for Source 5					
1940	...Repeated for Source 6					
Source Voltage (Read Only) (6 modules)						
1A00	Source 1 Phase AG Voltage RMS	0 to 999999.999	V	0.001	F060	0
1A02	Source 1 Phase BG Voltage RMS	0 to 999999.999	V	0.001	F060	0
1A04	Source 1 Phase CG Voltage RMS	0 to 999999.999	V	0.001	F060	0
1A06	Source 1 Phase AG Voltage Magnitude	0 to 999999.999	V	0.001	F060	0
1A08	Source 1 Phase AG Voltage Angle	-359.9 to 0	degrees	0.1	F002	0
1A09	Source 1 Phase BG Voltage Magnitude	0 to 999999.999	V	0.001	F060	0
1A0B	Source 1 Phase BG Voltage Angle	-359.9 to 0	degrees	0.1	F002	0
1A0C	Source 1 Phase CG Voltage Magnitude	0 to 999999.999	V	0.001	F060	0
1A0E	Source 1 Phase CG Voltage Angle	-359.9 to 0	degrees	0.1	F002	0
1A0F	Source 1 Phase AB or AC Voltage RMS	0 to 999999.999	V	0.001	F060	0
1A11	Source 1 Phase BC or BA Voltage RMS	0 to 999999.999	V	0.001	F060	0
1A13	Source 1 Phase CA or CB Voltage RMS	0 to 999999.999	V	0.001	F060	0
1A15	Source 1 Phase AB or AC Voltage Magnitude	0 to 999999.999	V	0.001	F060	0
1A17	Source 1 Phase AB or AC Voltage Angle	-359.9 to 0	degrees	0.1	F002	0
1A18	Source 1 Phase BC or BA Voltage Magnitude	0 to 999999.999	V	0.001	F060	0
1A1A	Source 1 Phase BC or BA Voltage Angle	-359.9 to 0	degrees	0.1	F002	0
1A1B	Source 1 Phase CA or CB Voltage Magnitude	0 to 999999.999	V	0.001	F060	0
1A1D	Source 1 Phase CA or CB Voltage Angle	-359.9 to 0	degrees	0.1	F002	0
1A1E	Source 1 Auxiliary Voltage RMS	0 to 999999.999	V	0.001	F060	0
1A20	Source 1 Auxiliary Voltage Magnitude	0 to 999999.999	V	0.001	F060	0
1A22	Source 1 Auxiliary Voltage Angle	-359.9 to 0	degrees	0.1	F002	0
1A23	Source 1 Zero Sequence Voltage Magnitude	0 to 999999.999	V	0.001	F060	0
1A25	Source 1 Zero Sequence Voltage Angle	-359.9 to 0	degrees	0.1	F002	0

Table B–10: MODBUS MEMORY MAP (Sheet 9 of 65)

ADDR	REGISTER NAME	RANGE	UNITS	STEP	FORMAT	DEFAULT
1A26	Source 1 Positive Sequence Voltage Magnitude	0 to 999999.999	V	0.001	F060	0
1A28	Source 1 Positive Sequence Voltage Angle	-359.9 to 0	degrees	0.1	F002	0
1A29	Source 1 Negative Sequence Voltage Magnitude	0 to 999999.999	V	0.001	F060	0
1A2B	Source 1 Negative Sequence Voltage Angle	-359.9 to 0	degrees	0.1	F002	0
1A2C	Reserved (20 items)	---	---	---	F001	0
1A40	...Repeated for Source 2					
1A80	...Repeated for Source 3					
1AC0	...Repeated for Source 4					
1B00	...Repeated for Source 5					
1B40	...Repeated for Source 6					
Source Power (Read Only) (6 modules)						
1C00	Source 1 Three Phase Real Power	-1000000000000 to 1000000000000	W	0.001	F060	0
1C02	Source 1 Phase A Real Power	-1000000000000 to 1000000000000	W	0.001	F060	0
1C04	Source 1 Phase B Real Power	-1000000000000 to 1000000000000	W	0.001	F060	0
1C06	Source 1 Phase C Real Power	-1000000000000 to 1000000000000	W	0.001	F060	0
1C08	Source 1 Three Phase Reactive Power	-1000000000000 to 1000000000000	var	0.001	F060	0
1C0A	Source 1 Phase A Reactive Power	-1000000000000 to 1000000000000	var	0.001	F060	0
1C0C	Source 1 Phase B Reactive Power	-1000000000000 to 1000000000000	var	0.001	F060	0
1C0E	Source 1 Phase C Reactive Power	-1000000000000 to 1000000000000	var	0.001	F060	0
1C10	Source 1 Three Phase Apparent Power	-1000000000000 to 1000000000000	VA	0.001	F060	0
1C12	Source 1 Phase A Apparent Power	-1000000000000 to 1000000000000	VA	0.001	F060	0
1C14	Source 1 Phase B Apparent Power	-1000000000000 to 1000000000000	VA	0.001	F060	0
1C16	Source 1 Phase C Apparent Power	-1000000000000 to 1000000000000	VA	0.001	F060	0
1C18	Source 1 Three Phase Power Factor	-0.999 to 1	---	0.001	F013	0
1C19	Source 1 Phase A Power Factor	-0.999 to 1	---	0.001	F013	0
1C1A	Source 1 Phase B Power Factor	-0.999 to 1	---	0.001	F013	0
1C1B	Source 1 Phase C Power Factor	-0.999 to 1	---	0.001	F013	0
1C1C	Reserved (4 items)	---	---	---	F001	0
1C20	...Repeated for Source 2					
1C40	...Repeated for Source 3					
1C60	...Repeated for Source 4					
1C80	...Repeated for Source 5					
1CA0	...Repeated for Source 6					
Source Frequency (Read Only) (6 modules)						
1D80	Frequency for Source 1	2 to 90	Hz	0.001	F003	0
1D82	Frequency for Source 2	2 to 90	Hz	0.001	F003	0
1D84	Frequency for Source 3	2 to 90	Hz	0.001	F003	0
1D86	Frequency for Source 4	2 to 90	Hz	0.001	F003	0
1D88	Frequency for Source 5	2 to 90	Hz	0.001	F003	0
1D8A	Frequency for Source 6	2 to 90	Hz	0.001	F003	0
Source Voltage THD and Harmonics (Read Only) (6 modules)						
1F80	Source 1 Va THD	0 to 99.9	---	0.1	F001	0
1F81	Source 1 Va Harmonics - 2nd to 25th (24 items)	0 to 99.9	---	0.1	F001	0
1F99	Source 1 Vb THD	0 to 99.9	---	0.1	F001	0
1F9A	Source 1 Vb Harmonics - 2nd to 25th (24 items)	0 to 99.9	---	0.1	F001	0
1FB2	Source 1 Vc THD	0 to 99.9	---	0.1	F001	0

Table B–10: MODBUS MEMORY MAP (Sheet 10 of 65)

ADDR	REGISTER NAME	RANGE	UNITS	STEP	FORMAT	DEFAULT
1FB3	Source 1 Vc Harmonics - 2nd to 25th (24 items)	0 to 99.9	---	0.1	F001	0
1FCB	...Repeated for Source 2					
2016	...Repeated for Source 3					
2061	...Repeated for Source 4					
20AC	...Repeated for Source 5					
20F7	...Repeated for Source 6					
Breaker Flashover (Read/Write Setting) (1 module)						
2196	Breaker Flashover 1 Function	0 to 1	---	1	F102	0 (Disabled)
2197	Breaker Flashover 1 Side 1 Source	0 to 5	---	1	F167	0 (SRC 1)
2198	Breaker Flashover 1 Side 2 Source	0 to 6	---	1	F211	0 (None)
2199	Breaker Flashover 1 Status Closed A	0 to 4294967295	---	1	F300	0
219B	Breaker Flashover 1 Status Closed B	0 to 4294967295	---	1	F300	0
219D	Breaker Flashover 1 Status Closed C	0 to 4294967295	---	1	F300	0
219F	Breaker Flashover 1 Voltage Pickup Level	0 to 1.5	pu	0.001	F001	850
21A0	Breaker Flashover 1 Voltage Difference Pickup Level	0 to 100000	V	1	F060	1000
21A2	Breaker Flashover 1 Current Pickup Level	0 to 1.5	pu	0.001	F001	600
21A3	Breaker Flashover 1 Pickup Delay	0 to 65.535	s	0.001	F001	100
21A4	Breaker Flashover 1 Supervision Phase A	0 to 4294967295	---	1	F300	0
21A6	Breaker Flashover 1 Supervision Phase B	0 to 4294967295	---	1	F300	0
21A8	Breaker Flashover 1 Supervision Phase C	0 to 4294967295	---	1	F300	0
21AA	Breaker Flashover 1 Block	0 to 4294967295	---	1	F300	0
21AC	Breaker Flashover 1 Events	0 to 1	---	1	F102	0 (Disabled)
21AD	Breaker Flashover 1 Target	0 to 2	---	1	F109	0 (Self-Reset)
21AE	Reserved (4 items)	---	---	---	F001	0
Passwords Unauthorized Access (Read/Write Command)						
2230	Reset Unauthorized Access	0 to 1	---	1	F126	0 (No)
Field Unit Raw Data Settings (Read/Write Setting)						
2460	Field Raw Data Port	0 to 7	---	1	F244	6 (H1a)
2461	Field Raw Data Freeze	0 to 1	---	1	F102	0 (Disabled)
Remote Double-Point Status Inputs (Read/Write Setting Registers) (5 modules)						
2540	Remote Double-point Status Input 1 Device	1 to 32	---	1	F001	1
2541	Remote Double-point Status Input 1 Item	0 to 64	---	1	F606	0 (None)
2542	Remote Double-point Status Input 1 Name	1 to 64	---	1	F205	"RemDPS Ip 1"
2548	Remote Double-point Status Input 1 Events	0 to 1	---	1	F102	0 (Disabled)
2549	... Repeated for Remote Double-point Status Input 2					
2552	... Repeated for Remote Double-point Status Input 3					
255B	... Repeated for Remote Double-point Status Input 4					
2564	... Repeated for Remote Double-point Status Input 5					
IEC 61850 GGIO5 Configuration (Read/Write Setting Registers) (16 modules)						
26D0	IEC 61850 GGIO5 uinteger Input 1 Operand	---	---	---	F612	0
26D1	IEC 61850 GGIO5 uinteger Input 2 Operand	---	---	---	F612	0
26D2	IEC 61850 GGIO5 uinteger Input 3 Operand	---	---	---	F612	0
26D3	IEC 61850 GGIO5 uinteger Input 4 Operand	---	---	---	F612	0
26D4	IEC 61850 GGIO5 uinteger Input 5 Operand	---	---	---	F612	0
26D5	IEC 61850 GGIO5 uinteger Input 6 Operand	---	---	---	F612	0
26D6	IEC 61850 GGIO5 uinteger Input 7 Operand	---	---	---	F612	0
26D7	IEC 61850 GGIO5 uinteger Input 8 Operand	---	---	---	F612	0
26D8	IEC 61850 GGIO5 uinteger Input 9 Operand	---	---	---	F612	0
26D9	IEC 61850 GGIO5 uinteger Input 10 Operand	---	---	---	F612	0
26DA	IEC 61850 GGIO5 uinteger Input 11 Operand	---	---	---	F612	0
26DB	IEC 61850 GGIO5 uinteger Input 12 Operand	---	---	---	F612	0
26DC	IEC 61850 GGIO5 uinteger Input 13 Operand	---	---	---	F612	0
26DD	IEC 61850 GGIO5 uinteger Input 14 Operand	---	---	---	F612	0
26DE	IEC 61850 GGIO5 uinteger Input 15 Operand	---	---	---	F612	0

Table B–10: MODBUS MEMORY MAP (Sheet 11 of 65)

ADDR	REGISTER NAME	RANGE	UNITS	STEP	FORMAT	DEFAULT
26DF	IEC 61850 GGIO5 uinteger Input 16 Operand	---	---	---	F612	0
IEC 61850 Received Integers (Read Only Actual Values) (16 modules)						
26F0	IEC 61850 Received uinteger 1	0 to 4294967295	---	1	F003	0
26F2	IEC 61850 Received uinteger 2	0 to 4294967295	---	1	F003	0
26F4	IEC 61850 Received uinteger 3	0 to 4294967295	---	1	F003	0
26F6	IEC 61850 Received uinteger 4	0 to 4294967295	---	1	F003	0
26F8	IEC 61850 Received uinteger 5	0 to 4294967295	---	1	F003	0
26FA	IEC 61850 Received uinteger 6	0 to 4294967295	---	1	F003	0
26FC	IEC 61850 Received uinteger 7	0 to 4294967295	---	1	F003	0
26FE	IEC 61850 Received uinteger 8	0 to 4294967295	---	1	F003	0
2700	IEC 61850 Received uinteger 9	0 to 4294967295	---	1	F003	0
2702	IEC 61850 Received uinteger 10	0 to 4294967295	---	1	F003	0
2704	IEC 61850 Received uinteger 11	0 to 4294967295	---	1	F003	0
2706	IEC 61850 Received uinteger 12	0 to 4294967295	---	1	F003	0
2708	IEC 61850 Received uinteger 13	0 to 4294967295	---	1	F003	0
270A	IEC 61850 Received uinteger 14	0 to 4294967295	---	1	F003	0
270C	IEC 61850 Received uinteger 15	0 to 4294967295	---	1	F003	0
270E	IEC 61850 Received uinteger 16	0 to 4294967295	---	1	F003	0
Source Current THD and Harmonics (Read Only) (6 modules)						
2800	Ia THD for Source 1	0 to 99.9	---	0.1	F001	0
2801	Ia Harmonics for Source 1 - 2nd to 25th (24 items)	0 to 99.9	---	0.1	F001	0
2821	Ib THD for Source 1	0 to 99.9	---	0.1	F001	0
2822	Ib Harmonics for Source 1 - 2nd to 25th (24 items)	0 to 99.9	---	0.1	F001	0
283A	Reserved (8 items)	0 to 0.1	---	0.1	F001	0
2842	Ic THD for Source 1	0 to 99.9	---	0.1	F001	0
2843	Ic Harmonics for Source 1 - 2nd to 25th (24 items)	0 to 99.9	---	0.1	F001	0
285B	Reserved (8 items)	0 to 0.1	---	0.1	F001	0
2863	...Repeated for Source 2					
28C6	...Repeated for Source 3					
2929	...Repeated for Source 4					
298C	...Repeated for Source 5					
29EF	...Repeated for Source 6					
Expanded FlexStates (Read Only)						
2B00	FlexStates, one per register (256 items)	0 to 1	---	1	F108	0 (Off)
Expanded Contact Input/Output States (Read Only)						
2D00	Contact Input States, one per register (96 items)	0 to 1	---	1	F108	0 (Off)
2D80	Contact Output States, one per register (64 items)	0 to 1	---	1	F108	0 (Off)
2E00	Virtual Output States, one per register (96 items)	0 to 1	---	1	F108	0 (Off)
Expanded Remote Input/Output Status (Read Only)						
2F00	Remote Device States, one per register (32 items)	0 to 1	---	1	F155	0 (Offline)
2F80	Remote Input States, one per register (64 items)	0 to 1	---	1	F108	0 (Off)
Oscillography Values (Read Only)						
3000	Oscillography Number of Triggers	0 to 65535	---	1	F001	0
3001	Oscillography Available Records	0 to 65535	---	1	F001	0
3002	Oscillography Last Cleared Date	0 to 400000000	---	1	F050	0
3004	Oscillography Number Of Cycles Per Record	0 to 65535	---	1	F001	0
Oscillography Commands (Read/Write Command)						
3005	Oscillography Force Trigger	0 to 1	---	1	F126	0 (No)
3011	Oscillography Clear Data	0 to 1	---	1	F126	0 (No)
Oscillography Analog Values (Read Only)						
3012	Oscillography Number of Triggers	0 to 32767	---	1	F001	0
User-Programmable Fault Report Commands (Read/Write Command)						
3060	User Fault Report Clear	0 to 1	---	1	F126	0 (No)

Table B–10: MODBUS MEMORY MAP (Sheet 12 of 65)

ADDR	REGISTER NAME	RANGE	UNITS	STEP	FORMAT	DEFAULT
User-Programmable Fault Report Actual Values (Read Only)						
3070	Newest Record Number	0 to 65535	---	1	F001	0
3071	Cleared Date	0 to 4294967295	---	1	F050	0
3073	Report Date (10 items)	0 to 4294967295	---	1	F050	0
User-Programmable Fault Report (Read/Write Setting) (2 modules)						
3090	Fault Report 1 Fault Trigger	0 to 4294967295	---	1	F300	0
3092	Fault Report 1 Function	0 to 1	---	1	F102	0 (Disabled)
3093	Fault Report 1 Prefault Trigger	0 to 4294967295	---	1	F300	0
3095	Fault Report Analog Channel 1 (32 items)	0 to 65536	---	1	F600	0
30B5	Reserved (5 items)	---	---	---	F001	0
30BA	...Repeated for Fault Report 2					
Modbus File Transfer (Read/Write)						
3100	Name of file to read	---	---	---	F204	(none)
Modbus File Transfer Values (Read Only)						
3200	Character position of current block within file	0 to 4294967295	---	1	F003	0
3202	Size of currently-available data block	0 to 65535	---	1	F001	0
3203	Block of data from requested file (122 items)	0 to 65535	---	1	F001	0
Security (Read/Write Setting)						
3280	Administrator Alphanumeric Password Setting	---	---	---	F202	(none)
Security (Read Only)						
328A	Administrator Alphanumeric Password Status	0 to 1	---	1	F102	0 (Disabled)
Security (Read/Write)						
328B	Administrator Alphanumeric Password Entry	---	---	---	F202	(none)
Security (Read/Write Setting)						
3295	Supervisor Alphanumeric Password Setting	---	---	---	F202	(none)
Security (Read Only)						
329F	Supervisor Alphanumeric Password Status	0 to 1	---	1	F102	0 (Disabled)
Security (Read/Write)						
32A0	Supervisor Alphanumeric Password Entry	---	---	---	F202	(none)
Security (Read/Write Setting)						
32AA	Engineer Alphanumeric Password Setting	---	---	---	F202	(none)
Security (Read Only)						
32B4	Engineer Alphanumeric Password Status	0 to 1	---	1	F102	0 (Disabled)
Security (Read/Write)						
32B5	Engineer Alphanumeric Password Entry	---	---	---	F202	(none)
Security (Read/Write Setting)						
32BF	Operator Alphanumeric Password Setting	---	---	---	F202	(none)
Security (Read Only)						
32C9	Operator Alphanumeric Password Status	0 to 1	---	1	F102	0 (Disabled)
Security (Read/Write)						
32CA	Operator Alphanumeric Password Entry	---	---	---	F202	(none)
Security (Read/Write Setting)						
32D4	Observer Alphanumeric Password Setting	---	---	---	F202	(none)
Security (Read Only)						
32DE	Observer Alphanumeric Password Status	0 to 1	---	1	F102	0 (Disabled)
Security (Read/Write)						
32DF	Observer Alphanumeric Password Entry	---	---	1	F202	(none)
Security (Read Only)						
32E9	Reserved for password settings of future roles (63 items)	0 to 65535	---	1	F001	0
3328	Security Status Indicator	0 to 65535	---	1	F618	0
Security (Read/Write Setting)						
3329	Session Lockout	0 to 99	---	1	F001	3
332A	Session Lockout Period	0 to 9999	min	1	F001	3
332B	Load Factory Defaults	0 to 1	---	1	F126	0 (No)

Table B–10: MODBUS MEMORY MAP (Sheet 13 of 65)

ADDR	REGISTER NAME	RANGE	UNITS	STEP	FORMAT	DEFAULT
332C	Syslog Server IP Address	0 to 4294967295	---	1	F003	0
332E	Syslog Server Port Number	1 to 65535	---	1	F001	514
Security Supervisory (Read/Write Setting)						
3331	Device Authentication Enable	0 to 1	---	1	F126	1 (Yes)
3332	Supervisor Role Enable	0 to 1	---	1	F102	0 (Disabled)
3333	Lock Relay	0 to 1	---	1	F102	0 (Disabled)
3334	Factory Service Mode Enable	0 to 1	---	1	F102	0 (Disabled)
3335	Failed Authentication Alarm Enable	0 to 1	---	1	F102	1 (Enabled)
3336	Firmware Lock Alarm	0 to 1	---	1	F102	1 (Enabled)
3337	Settings Lock Alarm	0 to 1	---	1	F102	1 (Enabled)
3338	Bypass Access	0 to 3	---	1	F628	0 (Disabled)
333A	Serial Inactivity Timeout	1 to 9999	---	1	F001	1
Security Command (Read/Write Command)						
3350	Operator Logoff	0 to 1	---	1	F126	0 (No)
3351	Engineer Logoff	0 to 1	---	1	F126	0 (No)
3352	Administrator Logoff	0 to 1	---	1	F126	0 (No)
3353	Clear Security Data	0 to 1	---	1	F126	0 (No)
Security Reserved Modbus Registers (Read/Write)						
3360	Address 0x3360 reserved for serial login (20 items)	0 to 9999	---	1	F001	3
3374	Address 0x3374 reserved for serial logout	0 to 9999	---	1	F001	3
Security Reserved Modbus Registers (Read Only)						
3375	Address 0x3374 reserved for serial logout	0 to 5	---	1	F617	3 (Engineer)
Event Recorder Actual Values (Read Only)						
3400	Events Since Last Clear	0 to 4294967295	---	1	F003	0
3402	Number of Available Events	0 to 4294967295	---	1	F003	0
3404	Event Recorder Last Cleared Date	0 to 4294967295	---	1	F050	0
Event Recorder Commands (Read/Write Command)						
3406	Event Recorder Clear Command	0 to 1	---	1	F126	0 (No)
Neutral Current Unbalance Commands and Actual Values (Read/Write Unless Noted) (3 modules)						
3410	Neutral Current Unbalance Automatic Setting Function	0 to 2	---	1	F092	0 (Disabled)
3411	Neutral Current Unbalance Apply Magnitude	0 to 1	---	1	F126	0 (No)
3412	Neutral Current Unbalance Apply Angle	0 to 1	---	1	F126	0 (No)
3413	60N Apply Magnitude Actual Value (Read Only)	0 to 0.15	---	0.0001	F003	0
3415	60N Apply Angle Actual Value (Read Only)	0 to 359	degrees	1	F003	0
3417	...Repeated for Neutral Current Unbalance 2					
341E	...Repeated for Neutral Current Unbalance 3					
Neutral Voltage Unbalance Commands and Actual Values (Read/Write Unless Noted) (3 modules)						
3430	Neutral Voltage Unbalance Automatic Setting Function	0 to 2	---	1	F092	0 (Disabled)
3431	59NU XA/XB Ratio Actual Value (Read Only)	0 to 9.9999	---	0.0001	F003	0
3433	Neutral Voltage Unbalance Auto-set XA/XB Ratio	0 to 1	---	1	F126	0 (No)
3434	59NU XA/XC Ratio Actual Value (Read Only)	0 to 9.9999	---	0.0001	F003	0
3436	Neutral Voltage Unbalance Auto-set XA/XC Ratio	0 to 1	---	1	F126	0 (No)
3437	...Repeated for Neutral Voltage Unbalance 2					
343E	...Repeated for Neutral Voltage Unbalance 3					
Phase Current Unbalance Commands and Actual Values (Read/Write Unless Noted) (3 modules)						
3450	Phase Current Unbalance Automatic Setting Function	0 to 2	---	1	F092	0 (Disabled)
3451	Phase Current Unbalance Ka Actual Value (Read Only)	–0.1 to 0.1	---	0.0001	F004	0
3453	Phase Current Unbalance Auto-set Ka	0 to 1	---	1	F126	0 (No)
3454	Phase Current Unbalance Kb Actual Value (Read Only)	–0.1 to 0.1	---	0.0001	F004	0
3456	Phase Current Unbalance Auto-set Kb	0 to 1	---	1	F126	0 (No)
3457	Phase Current Unbalance Kc Actual Value (Read Only)	–0.1 to 0.1	---	0.0001	F004	0
3459	Phase Current Unbalance Auto-set Kc	0 to 1	---	1	F126	0 (No)
345A	...Repeated for Phase Current Unbalance 2					
3464	...Repeated for Phase Current Unbalance 3					

Table B–10: MODBUS MEMORY MAP (Sheet 14 of 65)

ADDR	REGISTER NAME	RANGE	UNITS	STEP	FORMAT	DEFAULT
Voltage Differential Commands and Actual Values (Read/Write Unless Noted) (3 modules)						
3470	Voltage Differential Automatic Setting Function	0 to 2	---	1	F092	0 (Disabled)
3471	Voltage Differential Ka Actual Value (Read Only)	0 to 99.9999	---	0.0001	F003	0
3473	Voltage Differential Auto-set Ka	0 to 1	---	1	F126	0 (No)
3474	Voltage Differential Kb Actual value (Read Only)	0 to 99.9999	---	0.0001	F003	0
3476	Voltage Differential Auto-set Kb	0 to 1	---	1	F126	0 (No)
3477	Voltage Differential Kc Actual Value (Read Only)	0 to 99.9999	---	0.0001	F003	0
3479	Voltage Differential Auto-set Kc	0 to 1	---	1	F126	0 (No)
347A	...Repeated for Voltage Differential 2					
3484	...Repeated for Voltage Differential 3					
DCmA Input Values (Read Only) (24 modules)						
34C0	DCmA Inputs 1 Value	-9999.999 to 9999.999	---	0.001	F004	0
34C2	DCmA Inputs 2 Value	-9999.999 to 9999.999	---	0.001	F004	0
34C4	DCmA Inputs 3 Value	-9999.999 to 9999.999	---	0.001	F004	0
34C6	DCmA Inputs 4 Value	-9999.999 to 9999.999	---	0.001	F004	0
34C8	DCmA Inputs 5 Value	-9999.999 to 9999.999	---	0.001	F004	0
34CA	DCmA Inputs 6 Value	-9999.999 to 9999.999	---	0.001	F004	0
34CC	DCmA Inputs 7 Value	-9999.999 to 9999.999	---	0.001	F004	0
34CE	DCmA Inputs 8 Value	-9999.999 to 9999.999	---	0.001	F004	0
34D0	DCmA Inputs 9 Value	-9999.999 to 9999.999	---	0.001	F004	0
34D2	DCmA Inputs 10 Value	-9999.999 to 9999.999	---	0.001	F004	0
34D4	DCmA Inputs 11 Value	-9999.999 to 9999.999	---	0.001	F004	0
34D6	DCmA Inputs 12 Value	-9999.999 to 9999.999	---	0.001	F004	0
34D8	DCmA Inputs 13 Value	-9999.999 to 9999.999	---	0.001	F004	0
34DA	DCmA Inputs 14 Value	-9999.999 to 9999.999	---	0.001	F004	0
34DC	DCmA Inputs 15 Value	-9999.999 to 9999.999	---	0.001	F004	0
34DE	DCmA Inputs 16 Value	-9999.999 to 9999.999	---	0.001	F004	0
34E0	DCmA Inputs 17 Value	-9999.999 to 9999.999	---	0.001	F004	0
34E2	DCmA Inputs 18 Value	-9999.999 to 9999.999	---	0.001	F004	0
34E4	DCmA Inputs 19 Value	-9999.999 to 9999.999	---	0.001	F004	0
34E6	DCmA Inputs 20 Value	-9999.999 to 9999.999	---	0.001	F004	0
34E8	DCmA Inputs 21 Value	-9999.999 to 9999.999	---	0.001	F004	0
34EA	DCmA Inputs 22 Value	-9999.999 to 9999.999	---	0.001	F004	0
34EC	DCmA Inputs 23 Value	-9999.999 to 9999.999	---	0.001	F004	0
34EE	DCmA Inputs 24 Value	-9999.999 to 9999.999	---	0.001	F004	0
RTD Input Values (Read Only) (48 modules)						
34F0	RTD Input 1 Value	-32768 to 32767	°C	1	F002	0
34F1	RTD Input 2 Value	-32768 to 32767	°C	1	F002	0
34F2	RTD Input 3 Value	-32768 to 32767	°C	1	F002	0
34F3	RTD Input 4 Value	-32768 to 32767	°C	1	F002	0
34F4	RTD Input 5 Value	-32768 to 32767	°C	1	F002	0
34F5	RTD Input 6 Value	-32768 to 32767	°C	1	F002	0
34F6	RTD Input 7 Value	-32768 to 32767	°C	1	F002	0
34F7	RTD Input 8 Value	-32768 to 32767	°C	1	F002	0
34F8	RTD Input 9 Value	-32768 to 32767	°C	1	F002	0
34F9	RTD Input 10 Value	-32768 to 32767	°C	1	F002	0
34FA	RTD Input 11 Value	-32768 to 32767	°C	1	F002	0
34FB	RTD Input 12 Value	-32768 to 32767	°C	1	F002	0
34FC	RTD Input 13 Value	-32768 to 32767	°C	1	F002	0
34FD	RTD Input 14 Value	-32768 to 32767	°C	1	F002	0
34FE	RTD Input 15 Value	-32768 to 32767	°C	1	F002	0
34FF	RTD Input 16 Value	-32768 to 32767	°C	1	F002	0
3500	RTD Input 17 Value	-32768 to 32767	°C	1	F002	0
3501	RTD Input 18 Value	-32768 to 32767	°C	1	F002	0

Table B–10: MODBUS MEMORY MAP (Sheet 15 of 65)

ADDR	REGISTER NAME	RANGE	UNITS	STEP	FORMAT	DEFAULT
3502	RTD Input 19 Value	-32768 to 32767	°C	1	F002	0
3503	RTD Input 20 Value	-32768 to 32767	°C	1	F002	0
3504	RTD Input 21 Value	-32768 to 32767	°C	1	F002	0
3505	RTD Input 22 Value	-32768 to 32767	°C	1	F002	0
3506	RTD Input 23 Value	-32768 to 32767	°C	1	F002	0
3507	RTD Input 24 Value	-32768 to 32767	°C	1	F002	0
3508	RTD Input 25 Value	-32768 to 32767	°C	1	F002	0
3509	RTD Input 26 Value	-32768 to 32767	°C	1	F002	0
350A	RTD Input 27 Value	-32768 to 32767	°C	1	F002	0
350B	RTD Input 28 Value	-32768 to 32767	°C	1	F002	0
350C	RTD Input 29 Value	-32768 to 32767	°C	1	F002	0
350D	RTD Input 30 Value	-32768 to 32767	°C	1	F002	0
350E	RTD Input 31 Value	-32768 to 32767	°C	1	F002	0
350F	RTD Input 32 Value	-32768 to 32767	°C	1	F002	0
3510	RTD Input 33 Value	-32768 to 32767	°C	1	F002	0
3511	RTD Input 34 Value	-32768 to 32767	°C	1	F002	0
3512	RTD Input 35 Value	-32768 to 32767	°C	1	F002	0
3513	RTD Input 36 Value	-32768 to 32767	°C	1	F002	0
3514	RTD Input 37 Value	-32768 to 32767	°C	1	F002	0
3515	RTD Input 38 Value	-32768 to 32767	°C	1	F002	0
3516	RTD Input 39 Value	-32768 to 32767	°C	1	F002	0
3517	RTD Input 40 Value	-32768 to 32767	°C	1	F002	0
3518	RTD Input 41 Value	-32768 to 32767	°C	1	F002	0
3519	RTD Input 42 Value	-32768 to 32767	°C	1	F002	0
351A	RTD Input 43 Value	-32768 to 32767	°C	1	F002	0
351B	RTD Input 44 Value	-32768 to 32767	°C	1	F002	0
351C	RTD Input 45 Value	-32768 to 32767	°C	1	F002	0
351D	RTD Input 46 Value	-32768 to 32767	°C	1	F002	0
351E	RTD Input 47 Value	-32768 to 32767	°C	1	F002	0
351F	RTD Input 48 Value	-32768 to 32767	°C	1	F002	0
Ohm Input Values (Read Only) (2 modules)						
3520	Ohm Inputs 1 Value	0 to 65535	Ohm	1	F001	0
3521	Ohm Inputs 2 Value	0 to 65535	Ohm	1	F001	0
Expanded Direct Input/Output Status (Read Only)						
3560	Direct Device States, one per register (16 items)	0 to 1	---	1	F155	0 (Offline)
3570	Direct Input States, one per register (96 items)	0 to 1	---	1	F108	0 (Off)
Phase Current Unbalance Actual Values (Read Only) (3 modules)						
3600	Phase Current Unbalance 1 Raw Idiff A	0 to 99.9999	pu	0.0001	F004	0
3602	Phase Current Unbalance 1 Raw Idiff B	0 to 99.9999	pu	0.0001	F004	0
3604	Phase Current Unbalance 1 Raw Idiff C	0 to 99.9999	pu	0.0001	F004	0
3606	Phase Current Unbalance 1 Comp Iop A	0 to 99.9999	pu	0.0001	F004	0
3608	Phase Current Unbalance 1 Comp Iop B	0 to 99.9999	pu	0.0001	F004	0
360A	Phase Current Unbalance 1 Comp Iop C	0 to 99.9999	pu	0.0001	F004	0
360C	...Repeated for Phase Current Unbalance 2					
3618	...Repeated for Phase Current Unbalance 3					
Voltage Differential Actual Values (Read Only) (3 modules)						
3640	Voltage Differential 1 Bus Phase A Voltage	0 to 99.9999	pu	0.0001	F003	0
3642	Voltage Differential 1 Differential Phase A Voltage	0 to 99.9999	pu	0.0001	F003	0
3644	Voltage Differential 1 Bus Phase B Voltage	0 to 99.9999	pu	0.0001	F003	0
3646	Voltage Differential 1 Differential Phase B Voltage	0 to 99.9999	pu	0.0001	F003	0
3648	Voltage Differential 1 Bus Phase C Voltage	0 to 99.9999	pu	0.0001	F003	0
364A	Voltage Differential 1 Differential Phase C Voltage	0 to 99.9999	pu	0.0001	F003	0
364C	...Repeated for Voltage Differential 2					
3658	...Repeated for Voltage Differential 3					

Table B–10: MODBUS MEMORY MAP (Sheet 16 of 65)

ADDR	REGISTER NAME	RANGE	UNITS	STEP	FORMAT	DEFAULT
Neutral Current Unbalance Actual Values (Read Only) (3 modules)						
36C4	Neutral Current Unbalance 1 Raw INsp	0 to 9.9999	pu	0.0001	F003	0
36C6	Neutral Current Unbalance 1 Comp Iop	0 to 9.9999	pu	0.0001	F003	0
36C8	...Repeated for Neutral Current Unbalance 2					
36CC	...Repeated for Neutral Current Unbalance 3					
Neutral Voltage Unbalance Actual Values (Read Only) (3 modules)						
36F0	Neutral Voltage Unbalance 1 Neutral Point Vx Angle	0 to 99999.9	degrees	0.1	F004	0
36F2	Neutral Voltage Unbalance 1 V0 Angle	0 to 99999.9	degrees	0.1	F004	0
36F4	Neutral Voltage Unbalance 1 V0 Magnitude	0 to 99.9999	pu	0.0001	F004	0
36F6	Neutral Voltage Unbalance 1 Neutral Point Vx Magnitude	0 to 99.9999	pu	0.0001	F004	0
36F8	Neutral Voltage Unbalance 1 Vop	0 to 99.9999	pu	0.0001	F004	0
36FA	Neutral Voltage Unbalance 1 Vrest	0 to 99.9999	pu	0.0001	F004	0
36FC	...Repeated for Neutral Voltage Unbalance 2					
3708	...Repeated for Neutral Voltage Unbalance 3					
Time of Day Timer Actuals (Read Only)						
3720	Seconds of Day	1 to 86400	---	1	F003	0
3722	Day of Month	1 to 31	---	1	F001	0
3723	Day of Year	1 to 366	---	1	F001	0
3724	Year	1970 to 3000	---	1	F001	0
Time of Day Timer Status Actual Values (Read Only)						
3730	Time of Day Timer 1 State	0 to 1	---	1	F108	0 (Off)
3731	Time of Day Timer 2 State	0 to 1	---	1	F108	0 (Off)
3732	Time of Day Timer 3 State	0 to 1	---	1	F108	0 (Off)
3733	Time of Day Timer 4 State	0 to 1	---	1	F108	0 (Off)
3734	Time of Day Timer 5 State	0 to 1	---	1	F108	0 (Off)
RADIUS Configuration (Read/Write Setting)						
3735	Primary RADIUS IP Address	0 to 4294967295	---	1	F003	0
3737	Primary Authentication Port	1 to 65535	---	1	F001	1812
3738	Primary Accounting Port	1 to 65535	---	1	F001	1813
3739	Secondary RADIUS IP Address	0 to 4294967295	---	1	F003	0
373B	Secondary Authentication Port	0 to 65535	---	1	F001	1812
373D	Secondary Accounting Port	0 to 65535	---	1	F001	1813
373F	RADIUS Authentication Method	---	---	1	F619	0 (EAP-TTLS)
3740	RADIUS Vendor ID	1 to 65535	---	1	F001	2910
3741	Authentication Timeout	0 to 9999	sec	1	F001	10
3742	Authentication Retries	0 to 9999	---	1	F001	3
3743	RADIUS Authentication Shared Secret	---	---	---	F202	(none)
PTP Basic Configuration (Read/Write Setting)						
3750	PTP Strict Power Profile	0 to 1	---	1	F102	0 (Disabled)
3751	PTP Domain Number	0 to 255	---	1	F001	0
3752	PTP VLAN Priority	0 to 7	---	1	F001	4
3753	PTP VLAN ID	0 to 4095	---	1	F001	0
3754	Undefined (2 items)	0 to 1	---	1	F001	0
PTP Port Configuration (Read/Write Setting) (3 modules)						
3756	PTP Port 1 Function	0 to 1	---	1	F102	0 (Disabled)
3757	PTP Port 1 Path Delay Adder	0 to 60000	ns	1	F001	0
3758	PTP Port 1 Path Delay Asymmetry	-1000 to 1000	ns	1	F002	0
3759	...Repeated for PTP Port 2					
375C	...Repeated for PTP Port 3					
Real Time Clock Synchronizing Actual Values (Read Only)						
375F	RTC Sync Source	0 to 5	---	1	F624	0 (None)
3760	PTP GrandMaster ID	0 to 100	--	1	F073	0
3764	Real Time Clock Accuracy	0 to 999999999	ns	1	F003	0
3766	PTP Port 1 State (3 items)	0 to 4	--	1	F625	0 (Disabled)

Table B–10: MODBUS MEMORY MAP (Sheet 17 of 65)

ADDR	REGISTER NAME	RANGE	UNITS	STEP	FORMAT	DEFAULT
3769	RTC Offset	0 to 999999999	ns	1	F004	0
376B	PTP - IRIG-B Delta	-500000000 to 500000000	ns	1	F004	0
Real Time Clock Synchronizing FlexAnalogs (Read Only)						
376D	PTP - IRIG-B Delta FlexAnalog	-262143 to 262143	---	1	F004	0
Capacitor Control Actual Values (Read Only) (4 modules)						
3780	Capacitor Control 1 Discharge Time	0 to 3600	s	1	F001	0
3781	Capacitor Control 2 Discharge Time	0 to 3600	s	1	F001	0
3782	Capacitor Control 3 Discharge Time	0 to 3600	s	1	F001	0
3783	Capacitor Control 4 Discharge Time	0 to 3600	s	1	F001	0
Field Units (Read/Write Setting) (8 modules)						
3800	Field Unit 1 ID	0 to 1	---	1	F205	"U1"
3806	Field Unit 1 Function	0 to 1	---	1	F102	0 (Disabled)
3807	Field Unit 1 Type	0 to 3	---	1	F243	0 (CC-05)
3808	Field Unit 1 Serial Number	1 to 1	---	1	F205	"000000000000"
380E	Field Unit 1 Port	1 to 4	---	1	F001	1
380F	...Repeated for Field Unit 2					
381E	...Repeated for Field Unit 3					
382D	...Repeated for Field Unit 4					
383C	...Repeated for Field Unit 5					
384B	...Repeated for Field Unit 6					
385A	...Repeated for Field Unit 7					
3869	...Repeated for Field Unit 8					
Field Unit Process Card Ports (Read/Write Setting)						
3878	Field Unit 1 Process Card Port	0 to 7	---	1	F244	6 (H1a)
3879	Field Unit 2 Process Card Port	0 to 7	---	1	F244	4 (H2a)
387A	Field Unit3 Process Card Port	0 to 7	---	1	F244	2 (H3a)
387B	Field Unit 4 Process Card Port	0 to 7	---	1	F244	0 (H4a)
387C	Field Unit 5 Process Card Port	0 to 7	---	1	F244	7 (H1b)
387D	Field Unit 6 Process Card Port	0 to 7	---	1	F244	5 (H2b)
387E	Field Unit 7 Process Card Port	0 to 7	---	1	F244	3 (H3b)
387F	Field Unit 8 Process Card Port	0 to 7	---	1	F244	1 (H4b)
Field Unit CT VT Settings (Read/Write Setting) (6 modules)						
3890	Remote Phase CT x Origin 1	0 to 16	---	1	F247	0 (None)
3891	Remote Phase CT x Origin 2	0 to 16	---	1	F247	0 (None)
3892	Remote Ground CT x Origin 1	0 to 16	---	1	F248	0 (None)
3893	Remote Ground CT x Origin 2	0 to 16	---	1	F248	0 (None)
3894	AC Bank Redundancy Type	0 to 2	---	1	F261	1 (Dependability Biased)
3895	Remote Phase CT 1 Primary	1 to 65000	---	1	F001	1
3896	Remote Phase CT 1 Secondary	0 to 1	---	1	F123	0 (1 A)
3897	Remote Ground CT 1 Primary	1 to 65000	---	1	F001	1
3898	Remote Ground CT 1 Secondary	0 to 1	---	1	F123	0 (1 A)
3899	Remote Phase VT 1 Connection	0 to 1	---	1	F100	0 (Wye)
389A	Remote Phase VT 1 Secondary	25 to 240	---	0.1	F001	664
389B	Remote Phase VT 1 Ratio	1 to 24000	---	1	F060	1
389D	Remote Auxiliary VT 1 Connection	0 to 6	---	1	F166	1 (Vag)
389E	Remote Auxiliary VT 1 Secondary	25 to 240	---	0.1	F001	664
389F	Remote Auxiliary VT 1 Ratio	1 to 24000	---	1	F060	1
38A1	...Repeated for Field Unit 2					
38B2	...Repeated for Field Unit 3					
38C3	...Repeated for Field Unit 4					
38D4	...Repeated for Field Unit 5					
38E5	...Repeated for Field Unit 6					

Table B–10: MODBUS MEMORY MAP (Sheet 18 of 65)

ADDR	REGISTER NAME	RANGE	UNITS	STEP	FORMAT	DEFAULT
Field Unit Contact Inputs (Read/Write Setting) (40 modules)						
3900	Field Contact Input 1 ID	---	---	---	F205	"FCI 1"
3906	Field Contact Input 1 Origin	0 to 8	---	1	F256	0 (None)
3907	Field Contact Input 1 Input	1 to 18	---	1	F001	1
3908	Field Contact Input 1 Failsafe Value	0 to 1	---	1	F108	0 (Off)
3909	Field Contact Input 1 Debounce Time	0 to 16	ms	0.5	F001	20
390A	Field Contact Input 1 Events	0 to 1	---	1	F102	1 (Enabled)
390B	...Repeated for Field Contact Input 2					
3916	...Repeated for Field Contact Input 3					
3921	...Repeated for Field Contact Input 4					
392C	...Repeated for Field Contact Input 5					
3937	...Repeated for Field Contact Input 6					
3942	...Repeated for Field Contact Input 7					
394D	...Repeated for Field Contact Input 8					
3958	...Repeated for Field Contact Input9					
3963	...Repeated for Field Contact Input 10					
396E	...Repeated for Field Contact Input 11					
3979	...Repeated for Field Contact Input 12					
3984	...Repeated for Field Contact Input 13					
398F	...Repeated for Field Contact Input 14					
399A	...Repeated for Field Contact Input 15					
39A5	...Repeated for Field Contact Input 16					
39B0	...Repeated for Field Contact Input 17					
39BB	...Repeated for Field Contact Input 18					
39C6	...Repeated for Field Contact Input 19					
39D1	...Repeated for Field Contact Input 20					
39DC	...Repeated for Field Contact Input 21					
39E7	...Repeated for Field Contact Input 22					
39F2	...Repeated for Field Contact Input 23					
39FD	...Repeated for Field Contact Input 24					
3A08	...Repeated for Field Contact Input 25					
3A13	...Repeated for Field Contact Input 26					
3A1E	...Repeated for Field Contact Input 27					
3A29	...Repeated for Field Contact Input 28					
3A34	...Repeated for Field Contact Input 29					
3A3F	...Repeated for Field Contact Input 30					
3A4A	...Repeated for Field Contact Input 31					
3A55	...Repeated for Field Contact Input 32					
3A60	...Repeated for Field Contact Input 33					
3A6B	...Repeated for Field Contact Input 34					
3A76	...Repeated for Field Contact Input 35					
3A81	...Repeated for Field Contact Input 36					
3A8C	...Repeated for Field Contact Input 37					
3A97	...Repeated for Field Contact Input 38					
3AA2	...Repeated for Field Contact Input 39					
3AAD	...Repeated for Field Contact Input 40					
Field Unit Shared Inputs (Read/Write Setting) (16 modules)						
3B00	Field Shared Input 1 ID	0 to 65535	---	1	F205	"SI 1"
3B06	Field Shared Input 1 Unit Origin 1	0 to 8	---	1	F256	0 (None)
3B07	Field Shared Input 1 Channel Origin 1	1 to 15	---	1	F001	1
3B08	Field Shared Input 1 Events	0 to 1	---	1	F102	1 (Enabled)
3B09	...Repeated for Field Shared Input 2					
3B12	...Repeated for Field Shared Input 3					
3B1B	...Repeated for Field Shared Input 4					

Table B–10: MODBUS MEMORY MAP (Sheet 19 of 65)

ADDR	REGISTER NAME	RANGE	UNITS	STEP	FORMAT	DEFAULT
3B24	...Repeated for Field Shared Input 5					
3B2D	...Repeated for Field Shared Input 6					
3B36	...Repeated for Field Shared Input 7					
3B3F	...Repeated for Field Shared Input 8					
3B48	...Repeated for Field Shared Input 9					
3B51	...Repeated for Field Shared Input 10					
3B5A	...Repeated for Field Shared Input 11					
3B63	...Repeated for Field Shared Input 12					
3B6C	...Repeated for Field Shared Input 13					
3B75	...Repeated for Field Shared Input 14					
3B7E	...Repeated for Field Shared Input 15					
3B87	...Repeated for Field Shared Input 16					
Field Unit Contact Outputs (Read/Write Setting) (8 modules)						
3B90	Field Contact Output 1 ID (6 items)	---	---	---	F205	"FCO U /OUT"
3BB4	Field Output 1 Operate (6 items)	0 to 4294967295	---	1	F300	0
3BC0	Field Output 1 Seal In (6 items)	0 to 4294967295	---	1	F300	0
3BCC	Field Output 1 Events (6 items)	0 to 1	---	1	F102	1 (Enabled)
3BD2	...Repeated for Field Contact Output 2					
3C14	...Repeated for Field Contact Output 3					
3C56	...Repeated for Field Contact Output 4					
3C98	...Repeated for Field Contact Output 5					
3CDA	...Repeated for Field Contact Output 6					
3D1C	...Repeated for Field Contact Output 7					
3D5E	...Repeated for Field Contact Output 8					
Field Unit Latching Outputs (Read/Write Setting) (8 modules)						
3DC7	Field Latching Output 1 ID	0 to 1	---	1	F205	"FLO Ux /LO"
3DCD	Field Latching Output 1 Open	0 to 4294967295	---	1	F300	0
3DCF	Field Latching Output 1 Close	0 to 4294967295	---	1	F300	0
3DD1	Field Latching Output 1 Events	0 to 1	---	1	F102	1 (Enabled)
3DD2	Reserved (2 items)	0 to 1	---	1	F001	0
3DD4	...Repeated for Field Latching Output 2					
3DE1	...Repeated for Field Latching Output 3					
3DEE	...Repeated for Field Latching Output 4					
3DFB	...Repeated for Field Latching Output 5					
3E08	...Repeated for Field Latching Output 6					
3E15	...Repeated for Field Latching Output 7					
3E22	...Repeated for Field Latching Output 8					
Field Unit Shared Outputs (Read/Write Setting) (16 modules)						
3E30	Field Shared Output 1 ID	0 to 65535	---	1	F205	"SO 1"
3E36	Field Shared Output 1 Operate	0 to 4294967295	---	1	F300	0
3E38	Field Shared Output 1 Unit Dest 1	0 to 8	---	1	F256	0 (None)
3E39	Field Shared Output 1 Channel Dest 1	1 to 15	---	1	F001	1
3E3A	Field Shared Output 1 Unit Dest 2	0 to 8	---	1	F256	0 (None)
3E3B	Field Shared Output 1 Channel Dest 2	1 to 15	---	1	F001	1
3E3C	Field Shared Output 1 Events	0 to 1	---	1	F102	1 (Enabled)
3E3D	...Repeated for Field Shared Output 2					
3E4A	...Repeated for Field Shared Output 3					
3E57	...Repeated for Field Shared Output 4					
3E64	...Repeated for Field Shared Output 5					
3E71	...Repeated for Field Shared Output 6					
3E7E	...Repeated for Field Shared Output 7					
3E8B	...Repeated for Field Shared Output 8					
3E98	...Repeated for Field Shared Output 9					
3EA5	...Repeated for Field Shared Output 10					

Table B–10: MODBUS MEMORY MAP (Sheet 20 of 65)

ADDR	REGISTER NAME	RANGE	UNITS	STEP	FORMAT	DEFAULT
3EB2	...Repeated for Field Shared Output 11					
3EBF	...Repeated for Field Shared Output 12					
3ECC	...Repeated for Field Shared Output 13					
3ED9	...Repeated for Field Shared Output 14					
3EE6	...Repeated for Field Shared Output 15					
3EF3	...Repeated for Field Shared Output 16					
Field Unit RTDs (Read/Write Setting) (8 modules)						
3F00	Field Unit RTD 1Name	0 to 1	---	1	F205	"RTD 1"
3F06	Field Unit RTD 1 Origin	0 to 24	---	1	F253	0 (None)
3F07	Field Unit RTD 1 Type	0 to 2	---	1	F259	0 (100 Ohm Nickel)
3F08	...Repeated for Field Unit RTD 2					
3F10	...Repeated for Field Unit RTD 3					
3F18	...Repeated for Field Unit RTD 4					
3F20	...Repeated for Field Unit RTD 5					
3F28	...Repeated for Field Unit RTD 6					
3F30	...Repeated for Field Unit RTD 7					
3F38	...Repeated for Field Unit RTD 8					
Field Unit Transducers (Read/Write Setting) (8 modules)						
3F40	Field Unit Transducer 1 Name	0 to 1	---	1	F205	"TRD 1"
3F46	Field Unit Transducer 1 Origin	0 to 24	---	1	F253	0 (None)
3F47	Field Unit Transducer 1 Range	0 to 9	---	1	F246	6 (0...20mA)
3F48	Field Unit Transducer 1 Min Value	-9999.999 to 9999.999	---	0.001	F004	0
3F4A	Field Unit Transducer 1 Max Value	-9999.999 to 9999.999	---	0.001	F004	100000
3F4C	Field Unit Transducer 1 Units	---	---	---	F206	(none)
3F4F	...Repeated for Field Unit Transducer 2					
3F5E	...Repeated for Field Unit Transducer 3					
3F6D	...Repeated for Field Unit Transducer 4					
3F7C	...Repeated for Field Unit Transducer 5					
3F8B	...Repeated for Field Unit Transducer 6					
3F9A	...Repeated for Field Unit Transducer 7					
3FA9	...Repeated for Field Unit Transducer 8					
Field Unit Identifiers (Read Only) (8 modules)						
3FB8	Attached Field Unit 1 Serial Number	---	---	1	F205	(none)
3FBE	Attached Filed Unit 1 Port Number	---	---	1	F001	0
3FBF	Attached Field Unit 1 Type	0 to 3	---	1	F243	0 (CC-05)
3FC0	Field Unit 1 Status	0 to 4	---	1	F262	0 (Disabled)
3FC1	...Repeated for Field Unit 2					
3FCA	...Repeated for Field Unit 3					
3FD3	...Repeated for Field Unit 4					
3FDC	...Repeated for Field Unit 5					
3FE5	...Repeated for Field Unit 6					
3FEE	...Repeated for Field Unit 7					
3FF7	...Repeated for Field Unit 8					
Passwords (Read/Write Command)						
4000	Command Password Setting	0 to 4294967295	---	1	F202	(none)
Passwords (Read/Write Setting)						
400A	Setting Password Setting	0 to 4294967295	---	1	F202	(none)
Passwords (Read/Write)						
4014	Command Password Entry	0 to 4294967295	---	1	F202	(none)
401E	Setting Password Entry	0 to 4294967295	---	1	F202	(none)
Passwords (Read Only)						
4028	Command Password Status	0 to 1	---	1	F102	0 (Disabled)
4029	Setting Password Status	0 to 1	---	1	F102	0 (Disabled)

Table B–10: MODBUS MEMORY MAP (Sheet 21 of 65)

ADDR	REGISTER NAME	RANGE	UNITS	STEP	FORMAT	DEFAULT
Passwords (Read/Write Setting)						
402A	Command Password Access Timeout	5 to 480	min	1	F001	5
402B	Setting Password Access Timeout	5 to 480	min	1	F001	30
402C	Invalid Password Attempts (before lockout)	2 to 5	---	1	F001	3
402D	Password Lockout Duration	5 to 60	min	1	F001	5
Passwords (Read/Write)						
402E	Password Access Events	0 to 1	---	1	F102	0 (Disabled)
Passwords (Read/Write Setting)						
402F	Local Setting Auth	1 to 4294967295	---	1	F300	1
4031	Remote Setting Auth	0 to 4294967295	---	1	F300	1
4033	Access Auth Timeout	5 to 480	min	1	F001	30
User Display Invoke (Read/Write Setting)						
4040	Invoke and Scroll Through User Display Menu Operand	0 to 4294967295	---	1	F300	0
LED Test (Read/Write Setting)						
4048	LED Test Function	0 to 1	---	1	F102	0 (Disabled)
4049	LED Test Control	0 to 4294967295	---	1	F300	0
Preferences (Read/Write Setting)						
404F	Language	0 to 5	---	1	F531	0 (English)
4050	Flash Message Time	0.5 to 10	s	0.1	F001	10
4051	Default Message Timeout	10 to 900	s	1	F001	300
4052	Default Message Intensity	0 to 3	---	1	F101	0 (25%)
4053	Screen Saver Feature	0 to 1	---	1	F102	0 (Disabled)
4054	Screen Saver Wait Time	1 to 65535	min	1	F001	30
4055	Current Cutoff Level	0.002 to 0.02	pu	0.001	F001	20
4056	Voltage Cutoff Level	0.1 to 1	V	0.1	F001	10
Communications (Read/Write Setting)						
407D	COM2 Selection	0 to 3	---	1	F601	0 (RS485)
407E	COM1 Minimum Response Time	0 to 1000	ms	10	F001	0
407F	COM2 Minimum Response Time	0 to 1000	ms	10	F001	0
4080	Modbus Slave Address	1 to 254	---	1	F001	254
4083	RS485 Com1 Baud Rate	0 to 11	---	1	F112	8 (115200)
4084	RS485 Com1 Parity	0 to 2	---	1	F113	0 (None)
4085	RS485 Com2 Baud Rate	0 to 11	---	1	F112	8 (115200)
4086	RS485 Com2 Parity	0 to 2	---	1	F113	2 (Even)
4087	Port 1 IP Address	0 to 4294967295	---	1	F003	2130706433
4089	Port 1 IP Subnet Mask	0 to 4294967295	---	1	F003	4278190080
408B	Port 1 Gateway IP Address	0 to 4294967295	---	1	F003	56554497
408D	Network Address NSAP	---	---	---	F074	0
4097	Port 1 Link Loss Alert	0 to 1	---	1	F102	0 (Disabled)
4098	Port 2 Link Loss Alert	0 to 1	---	1	F102	0 (Disabled)
4099	Port 3 Link Loss Alert	0 to 1	---	1	F102	0 (Disabled)
409A	DNP Channel 1 Port	0 to 5	---	1	F177	0 (None)
409B	DNP Channel 2 Port	0 to 5	---	1	F177	0 (None)
409C	DNP Address	0 to 65519	---	1	F001	1
409E	DNP Client Addresses (2 items)	0 to 4294967295	---	1	F003	0
40A3	TCP Port Number for the Modbus protocol	0 to 65535	---	1	F001	502
40A4	TCP/UDP Port Number for the DNP Protocol	0 to 65535	---	1	F001	20000
40A5	TCP Port Number for the HTTP (Web Server) Protocol	0 to 65535	---	1	F001	80
40A6	Main UDP Port Number for the TFTP Protocol	0 to 65535	---	1	F001	69
40A7	Data Transfer UDP Port Numbers for the TFTP Protocol (zero means “automatic”) (2 items)	0 to 65535	---	1	F001	0
40A9	DNP Unsolicited Responses Function	0 to 1	---	1	F102	0 (Disabled)
40AA	DNP Unsolicited Responses Timeout	0 to 60	s	1	F001	5
40AB	DNP Unsolicited Responses Maximum Retries	1 to 255	---	1	F001	10

Table B–10: MODBUS MEMORY MAP (Sheet 22 of 65)

ADDR	REGISTER NAME	RANGE	UNITS	STEP	FORMAT	DEFAULT
40AC	DNP Unsolicited Responses Destination Address	0 to 65519	---	1	F001	1
40AD	Ethernet Operation Mode	0 to 1	---	1	F192	1 (Full-Duplex)
40AE	DNP Current Scale Factor	0 to 8	---	1	F194	2 (1)
40AF	DNP Voltage Scale Factor	0 to 8	---	1	F194	2 (1)
40B0	DNP Power Scale Factor	0 to 8	---	1	F194	2 (1)
40B1	DNP Energy Scale Factor	0 to 8	---	1	F194	2 (1)
40B2	DNP Power Scale Factor	0 to 8	---	1	F194	2 (1)
40B3	DNP Other Scale Factor	0 to 8	---	1	F194	2 (1)
40B4	DNP Current Default Deadband	0 to 100000000	---	1	F003	30000
40B6	DNP Voltage Default Deadband	0 to 100000000	---	1	F003	30000
40B8	DNP Power Default Deadband	0 to 100000000	---	1	F003	30000
40BA	DNP Energy Default Deadband	0 to 100000000	---	1	F003	30000
40BC	DNP Power Factor Default Deadband	0 to 100000000	--	1	F003	30000
40BE	DNP Other Default Deadband	0 to 100000000	---	1	F003	30000
40C0	DNP IIN Time Synchronization Bit Period	1 to 10080	min	1	F001	1440
40C1	DNP Message Fragment Size	30 to 2048	---	1	F001	240
40C2	DNP Client Address 3	0 to 4294967295	---	1	F003	0
40C4	DNP Client Address 4	0 to 4294967295	---	1	F003	0
40C6	DNP Client Address 5	0 to 4294967295	---	1	F003	0
40C8	DNP Number of Paired Binary Output Control Points	0 to 32	---	1	F001	0
40C9	DNP TCP Connection Timeout	10 to 7200	s	1	F001	120
40CA	DNP Communications Reserved (22 items)	0 to 1	---	1	F001	0
40E0	TCP Port Number for the IEC 60870-5-104 Protocol	0 to 65535	---	1	F001	2404
40E1	IEC 60870-5-104 Protocol Function	0 to 1	---	1	F102	0 (Disabled)
40E2	IEC 60870-5-104 Protocol Common Address of ASDU	0 to 65535	---	1	F001	0
40E3	IEC 60870-5-104 Protocol Cyclic Data Transmit Period	1 to 65535	s	1	F001	60
40E4	IEC 60870-5-104 Current Default Threshold	0 to 100000000	---	1	F003	30000
40E6	IEC 60870-5-104 Voltage Default Threshold	0 to 100000000	---	1	F003	30000
40E8	IEC 60870-5-104 Power Default Threshold	0 to 100000000	---	1	F003	30000
40EA	IEC 60870-5-104 Energy Default Threshold	0 to 100000000	---	1	F003	30000
40EC	IEC 60870-5-104 Power Default Threshold	0 to1	---	0.01	F001	100
40EE	IEC 60870-5-104 Other Default Threshold	0 to 100000000	---	1	F003	30000
40F0	IEC 60870-5-104 Client Address (5 items)	0 to 4294967295	---	1	F003	0
4104	IEC 60870-5-104 Redundancy Port Enabled/Disabled	0 to 1	---	1	F126	0 (No)
4105	Port 2 IP Address	0 to 4294967295	---	1	F003	2130706433
4107	Port 2 IP Subnet Mask	0 to 4294967295	---	1	F003	4278190080
4109	Port 2 Gateway IP Address	0 to 4294967295	---	1	F003	56554497
410B	PRT2 Ethernet Operation Mode	0 to 1	---	1	F192	1 (Full-Duplex)
410C	PRT2 Redundancy Enabled	0 to 2	---	1	F627	0 (None)
410D	Port 3 IP Address	0 to 4294967295	---	1	F003	2130706433
410F	Port 3 IP Subnet Mask	0 to 4294967295	---	1	F003	4278190080
4111	Port 3 Gateway IP Address	0 to 4294967295	---	1	F003	56554497
4113	Port 3 Ethernet Operation Mode	0 to 1	---	1	F192	1 (Full-Duplex)
4114	PRT1 GOOSE Enabled	0 to 1	---	1	F102	1 (Enabled)
4115	PRT2 GOOSE Enabled	0 to 1	---	1	F102	1 (Enabled)
4116	PRT3 GOOSE Enabled	0 to 1	---	1	F102	1 (Enabled)
4117	Default IPv4 Route	0 to 4294967295	---	1	F003	2130706433
4119	PRT2 PRP Mcst Addr	---	---	---	F072	0
411C	IEC Communications Reserved (33 items)	0 to 1	---	1	F001	0
413E	High Enet Traffic Function	0 to 1	---	1	F102	0 (Disabled)
413F	High Enet Traffic Events	0 to 1	---	1	F102	0 (Disabled)
4140	DNP Object 1 Default Variation	1 to 2	---	1	F001	2
4141	DNP Object 2 Default Variation	1 to 3	---	1	F001	2
4142	DNP Object 20 Default Variation	0 to 3	---	1	F523	0 (1)

Table B–10: MODBUS MEMORY MAP (Sheet 23 of 65)

ADDR	REGISTER NAME	RANGE	UNITS	STEP	FORMAT	DEFAULT
4143	DNP Object 21 Default Variation	0 to 3	---	1	F524	0 (1)
4144	DNP Object 22 Default Variation	0 to 3	---	1	F523	0 (1)
4145	DNP Object 23 Default Variation	0 to 3	---	1	F523	0 (1)
4146	DNP Object 30 Default Variation	1 to 5	---	1	F001	1
4147	DNP Object 32 Default Variation	0 to 5	---	1	F525	0 (1)
4148	SCADA Protocol	0 to 2	---	1	F629	0 (DNP 3.0)
Communications Actual Values (Read Only)						
4160	Modbus Available TCP/IP Connections	0 to 4	---	1	F001	4
4161	DNP Available TCP/IP Connections	0 to 2	---	1	F001	2
4162	IEC Available TCP/IP Connections	0 to 2	---	1	F001	2
4163	MMS Available TCP/IP Connections	0 to 5	---	1	F001	5
4164	PMU Available TCP/IP Connections	0 to 4	---	1	F001	4
Simple Network Time Protocol (Read/Write Setting)						
4168	Simple Network Time Protocol (SNTP) Function	0 to 1	---	1	F102	0 (Disabled)
4169	Simple Network Time Protocol (SNTP) Server IP Address	0 to 4294967295	---	1	F003	0
416B	Simple Network Time Protocol (SNTP) UDP Port Number	1 to 65535	---	1	F001	123
Data Logger Commands (Read/Write Command)						
4170	Data Logger Clear	0 to 1	---	1	F126	0 (No)
Data Logger (Read/Write Setting)						
4181	Data Logger Channel Settings (16 items)	---	---	---	F600	0
4191	Data Logger Mode	0 to 1	---	1	F260	0 (Continuous)
4192	Data Logger Trigger	0 to 4294967295	---	1	F300	0
4194	Data Logger Rate	15 to 3600000	ms	1	F003	60000
Clock (Read/Write Setting)						
419F	Synchronizing Source	0 to 3	---	1	F623	0 (None)
Clock (Read/Write Command)						
41A0	Real Time Clock Set Time	0 to 235959	---	1	F050	0
Clock (Read/Write Setting)						
41A2	SR Date Format	0 to 4294967295	---	1	F051	0
41A4	SR Time Format	0 to 4294967295	---	1	F052	0
41A6	IRIG-B Signal Type	0 to 2	---	1	F114	0 (None)
41A7	Clock Events Enable / Disable	0 to 1	---	1	F102	0 (Disabled)
41A8	Time Zone Offset from UTC	–24 to 24	hours	0.5	F002	0
41A9	Daylight Savings Time (DST) Function	0 to 1	---	1	F102	0 (Disabled)
41AA	Daylight Savings Time (DST) Start Month	0 to 11	---	1	F237	0 (January)
41AB	Daylight Savings Time (DST) Start Day	0 to 6	---	1	F238	0 (Sunday)
41AC	Daylight Savings Time (DST) Start Day Instance	0 to 4	---	1	F239	0 (First)
41AD	Daylight Savings Time (DST) Start Hour	0 to 23	---	1	F001	2
41AE	Daylight Savings Time (DST) Stop Month	0 to 11	---	1	F237	0 (January)
41AF	Daylight Savings Time (DST) Stop Day	0 to 6	---	1	F238	0 (Sunday)
41B0	Daylight Savings Time (DST) Stop Day Instance	0 to 4	---	1	F239	0 (First)
41B1	Daylight Savings Time (DST) Stop Hour	0 to 23	---	1	F001	2
Oscillography (Read/Write Setting)						
41C0	Oscillography Number of Records	3 to 64	---	1	F001	15
41C1	Oscillography Trigger Mode	0 to 1	---	1	F118	0 (Auto. Overwrite)
41C2	Oscillography Trigger Position	0 to 100	%	1	F001	50
41C3	Oscillography Trigger Source	0 to 4294967295	---	1	F300	0
41C5	Oscillography AC Input Waveforms	0 to 4	---	1	F183	2 (16 samples/ cycle)
41D0	Oscillography Analog Channel *n* (16 items)	0 to 65535	---	1	F600	0
4200	Oscillography Digital Channel *n* (63 items)	0 to 4294967295	---	1	F300	0
Trip and Alarm LEDs (Read/Write Setting)						
42B0	Trip LED Input FlexLogic Operand	0 to 4294967295	---	1	F300	0
42B2	Alarm LED Input FlexLogic Operand	0 to 4294967295	---	1	F300	0

Table B–10: MODBUS MEMORY MAP (Sheet 24 of 65)

ADDR	REGISTER NAME	RANGE	UNITS	STEP	FORMAT	DEFAULT
User Programmable LEDs (Read/Write Setting) (48 modules)						
42C0	FlexLogic Operand to Activate LED	0 to 4294967295	---	1	F300	0
42C2	User LED type (latched or self-resetting)	0 to 1	---	1	F127	1 (Self-Reset)
42C3	...Repeated for User-Programmable LED 2					
42C6	...Repeated for User-Programmable LED 3					
42C9	...Repeated for User-Programmable LED 4					
42CC	...Repeated for User-Programmable LED 5					
42CF	...Repeated for User-Programmable LED 6					
42D2	...Repeated for User-Programmable LED 7					
42D5	...Repeated for User-Programmable LED 8					
42D8	...Repeated for User-Programmable LED 9					
42DB	...Repeated for User-Programmable LED 10					
42DE	...Repeated for User-Programmable LED 11					
42E1	...Repeated for User-Programmable LED 12					
42E4	...Repeated for User-Programmable LED 13					
42E7	...Repeated for User-Programmable LED 14					
42EA	...Repeated for User-Programmable LED 15					
42ED	...Repeated for User-Programmable LED 16					
42F0	...Repeated for User-Programmable LED 17					
42F3	...Repeated for User-Programmable LED 18					
42F6	...Repeated for User-Programmable LED 19					
42F9	...Repeated for User-Programmable LED 20					
42FC	...Repeated for User-Programmable LED 21					
42FF	...Repeated for User-Programmable LED 22					
4302	...Repeated for User-Programmable LED 23					
4305	...Repeated for User-Programmable LED 24					
4308	...Repeated for User-Programmable LED 25					
430B	...Repeated for User-Programmable LED 26					
430E	...Repeated for User-Programmable LED 27					
4311	...Repeated for User-Programmable LED 28					
4314	...Repeated for User-Programmable LED 29					
4317	...Repeated for User-Programmable LED 30					
431A	...Repeated for User-Programmable LED 31					
431D	...Repeated for User-Programmable LED 32					
4320	...Repeated for User-Programmable LED 33					
4323	...Repeated for User-Programmable LED 34					
4326	...Repeated for User-Programmable LED 35					
4329	...Repeated for User-Programmable LED 36					
432C	...Repeated for User-Programmable LED 37					
432F	...Repeated for User-Programmable LED 38					
4332	...Repeated for User-Programmable LED 39					
4335	...Repeated for User-Programmable LED 40					
4338	...Repeated for User-Programmable LED 41					
433B	...Repeated for User-Programmable LED 42					
433E	...Repeated for User-Programmable LED 43					
4341	...Repeated for User-Programmable LED 44					
4344	...Repeated for User-Programmable LED 45					
4347	...Repeated for User-Programmable LED 46					
434A	...Repeated for User-Programmable LED 47					
434D	...Repeated for User-Programmable LED 48					
PRP Status (Read Only)						
4363	Total Received Port A	0 to 4294967295	---	1	F003	0
4365	Total Received Port B	0 to 4294967295	---	1	F003	0
4367	Total Mismatches Port A	0 to 4294967295	---	1	F003	0

Table B–10: MODBUS MEMORY MAP (Sheet 25 of 65)

ADDR	REGISTER NAME	RANGE	UNITS	STEP	FORMAT	DEFAULT
4369	Total Mismatches Port B	0 to 4294967295	---	1	F003	0
436B	Total Errors	0 to 4294967295	---	1	F003	0
IPv4 Route Table (Read/Write Setting) (6 modules)						
4370	IPv4 Network Route 1 Destination	0 to 4294967295	---	1	F003	2130706433
4372	IPv4 Network Route 1 Netmask	0 to 4294967295	---	1	F003	4278190080
4374	IPv4 Network Route 1 Gateway	0 to 4294967295	---	1	F003	2130706433
4376	...Repeated for Route 2					
437C	...Repeated for Route 3					
4382	...Repeated for Route 4					
4388	...Repeated for Route 5					
438E	...Repeated for Route 6					
Installation (Read/Write Setting)						
43E0	Relay Programmed State	0 to 1	---	1	F133	0 (Not Programmed)
43E1	Relay Name	---	---	---	F202	“Relay-1”
User Programmable Self Tests (Read/Write Setting)						
4441	User Programmable Detect Ring Break Function	0 to 1	---	1	F102	1 (Enabled)
4442	User Programmable Direct Device Off Function	0 to 1	---	1	F102	1 (Enabled)
4443	User Programmable Remote Device Off Function	0 to 1	---	1	F102	1 (Enabled)
4444	User Programmable First Ethernet Fail Function	0 to 1	---	1	F102	0 (Disabled)
4445	User Programmable Secondary Ethernet Fail Function	0 to 1	---	1	F102	0 (Disabled)
4446	User Programmable Battery Fail Function	0 to 1	---	1	F102	1 (Enabled)
4447	User Programmable SNTP Fail Function	0 to 1	---	1	F102	1 (Enabled)
4448	User Programmable IRIG-B Fail Function	0 to 1	---	1	F102	1 (Enabled)
4449	User Programmable Ethernet Switch Fail Function	0 to 1	---	1	F102	1 (Enabled)
444A	Process Bus Failure Operand	0 to 4294967295	---	1	F300	0
444C	PTP Fail Function	0 to 1	---	1	F102	1 (Enabled)
444D	User Programmable Third Ethernet Fail Function	0 to 1	---	1	F102	0 (Disabled)
444E	User Programmable SFP Fail Function	0 to 1	---	1	F102	0 (Disabled)
CT Settings (Read/Write Setting) (6 modules)						
4480	Phase CT 1 Primary	1 to 65000	A	1	F001	1
4481	Phase CT 1 Secondary	0 to 1	---	1	F123	0 (1 A)
4482	Ground CT 1 Primary	1 to 65000	A	1	F001	1
4483	Ground CT 1 Secondary	0 to 1	---	1	F123	0 (1 A)
4484	...Repeated for CT Bank 2					
4488	...Repeated for CT Bank 3					
448C	...Repeated for CT Bank 4					
4490	...Repeated for CT Bank 5					
4494	...Repeated for CT Bank 6					
VT Settings (Read/Write Setting) (6 modules)						
4500	Phase VT 1 Connection	0 to 1	---	1	F100	0 (Wye)
4501	Phase VT 1 Secondary	25 to 240	V	0.1	F001	664
4502	Phase VT 1 Ratio	1 to 24000	:1	1	F060	1
4504	Auxiliary VT 1 Connection	0 to 6	---	1	F166	1 (Vag)
4505	Auxiliary VT 1 Secondary	25 to 240	V	0.1	F001	664
4506	Auxiliary VT 1 Ratio	1 to 24000	:1	1	F060	1
4508	...Repeated for VT Bank 2					
4510	...Repeated for VT Bank 3					
4518	...Repeated for VT Bank 4					
4520	...Repeated for VT Bank 5					
4528	...Repeated for VT Bank 6					
Source Settings (Read/Write Setting) (6 modules)						
4580	Source 1 Name	0 to 1	---	1	F206	“SRC 1"
4583	Source 1 Phase CT	0 to 63	---	1	F400	0

Table B–10: MODBUS MEMORY MAP (Sheet 26 of 65)

ADDR	REGISTER NAME	RANGE	UNITS	STEP	FORMAT	DEFAULT
4584	Source 1 Ground CT	0 to 63	---	1	F400	0
4585	Source 1 Phase VT	0 to 63	---	1	F400	0
4586	Source 1 Auxiliary VT	0 to 63	---	1	F400	0
4587	...Repeated for Source 2					
458E	...Repeated for Source 3					
4595	...Repeated for Source 4					
459C	...Repeated for Source 5					
45A3	...Repeated for Source 6					
Power System (Read/Write Setting)						
4600	Nominal Frequency	25 to 60	Hz	1	F001	60
4601	Phase Rotation	0 to 1	---	1	F106	0 (ABC)
4602	Frequency and Phase Reference	0 to 5	---	1	F167	0 (SRC 1)
4603	Frequency Tracking Function	0 to 1	---	1	F102	1 (Enabled)
Breaker Control (Read/Write Settings) (6 modules)						
47D0	Breaker 1 Function	0 to 1	---	1	F102	0 (Disabled)
47D1	Breaker 1 Name	---	---	---	F206	“Bkr 1"
47D4	Breaker 1 Mode	0 to 1	---	1	F157	0 (3-Pole)
47D5	Breaker 1 Open	0 to 4294967295	---	1	F300	0
47D7	Breaker 1 Close	0 to 4294967295	---	1	F300	0
47D9	Breaker 1 Phase A / Three-pole Closed	0 to 4294967295	---	1	F300	0
47DB	Breaker 1 Phase B Closed	0 to 4294967295	---	1	F300	0
47DD	Breaker 1 Phase C Closed	0 to 4294967295	---	1	F300	0
47DF	Breaker 1 External Alarm	0 to 4294967295	---	1	F300	0
47E1	Breaker 1 Alarm Delay	0 to 65.535	s	0.001	F003	0
47E3	Breaker 1 Pushbutton Control	0 to 1	---	1	F102	0 (Disabled)
47E4	Breaker 1 Manual Close Recall Time	0 to 65.535	s	0.001	F003	0
47E6	Breaker 1 Out of Service	0 to 4294967295	---	1	F300	0
47E8	Breaker 1 Block Open	0 to 4294967295	---	1	F300	0
47EA	Breaker 1 Block Close	0 to 4294967295	---	1	F300	0
47EC	Breaker 1 Phase A / Three-pole Opened	0 to 4294967295	---	1	F300	0
47EE	Breaker 1 Phase B Opened	0 to 4294967295	---	1	F300	0
47F0	Breaker 1 Phase C Opened	0 to 4294967295	---	1	F300	0
47F2	Breaker 1 Operate Time	0 to 65.535	s	0.001	F001	70
47F3	Breaker 1 Events	0 to 1	---	1	F102	0 (Disabled)
47F4	Reserved	0 to 65535	s	1	F001	0
47F5	...Repeated for Breaker 2					
481A	...Repeated for Breaker 3					
483F	...Repeated for Breaker 4					
4864	...Repeated for Breaker 5					
4889	...Repeated for Breaker 6					
FlexCurves A and B (Read/Write Settings)						
4910	FlexCurve A (120 items)	0 to 65535	ms	1	F011	0
4988	FlexCurve B (120 items)	0 to 65535	ms	1	F011	0
Modbus User Map (Read/Write Setting)						
4A00	Modbus Address Settings for User Map (256 items)	0 to 65535	---	1	F001	0
User Displays Settings (Read/Write Setting) (16 modules)						
4C00	User-Definable Display 1 Top Line Text	---	---	---	F202	“ “
4C0A	User-Definable Display 1 Bottom Line Text	---	---	---	F202	“ “
4C14	Modbus Addresses of Display 1 Items (5 items)	0 to 65535	---	1	F001	0
4C19	Reserved (7 items)	---	---	---	F001	0
4C20	...Repeated for User-Definable Display 2					
4C40	...Repeated for User-Definable Display 3					
4C60	...Repeated for User-Definable Display 4					
4C80	...Repeated for User-Definable Display 5					

Table B–10: MODBUS MEMORY MAP (Sheet 27 of 65)

ADDR	REGISTER NAME	RANGE	UNITS	STEP	FORMAT	DEFAULT
4CA0	...Repeated for User-Definable Display 6					
4CC0	...Repeated for User-Definable Display 7					
4CE0	...Repeated for User-Definable Display 8					
4D00	...Repeated for User-Definable Display 9					
4D20	...Repeated for User-Definable Display 10					
4D40	...Repeated for User-Definable Display 11					
4D60	...Repeated for User-Definable Display 12					
4D80	...Repeated for User-Definable Display 13					
4DA0	...Repeated for User-Definable Display 14					
4DC0	...Repeated for User-Definable Display 15					
4DE0	...Repeated for User-Definable Display 16					
Field Unit Raw Data Actuals (Read Only) (8 modules)						
4E00	Raw Field Data AC1 Mag	0 to 0.001	A	0.001	F003	0
4E02	Raw Field Data AC1 Angle	0 to 0.1	degree	0.1	F002	0
4E03	Raw Field Data AC2 Mag	0 to 0.001	A	0.001	F003	0
4E05	Raw Field Data AC2 Angle	0 to 0.1	degree	0.1	F002	0
4E06	Raw Field Data AC3 Mag	0 to 0.001	A	0.001	F003	0
4E08	Raw Field Data AC3 Angle	0 to 0.1	degree	0.1	F002	0
4E09	Raw Field Data AC4 Mag	0 to 0.001	A	0.001	F003	0
4E0B	Raw Field Data AC4 Angle	0 to 0.1	degree	0.1	F002	0
4E0C	Raw Field Data AC5 Mag	0 to 0.001	A/V	0.001	F003	0
4E0E	Raw Field Data AC5 Angle	0 to 0.1	degree	0.1	F002	0
4E0F	Raw Field Data AC6 Mag	0 to 0.001	A/V	0.001	F003	0
4E11	Raw Field Data AC6 Angle	0 to 0.1	degree	0.1	F002	0
4E12	Raw Field Data AC7 Mag	0 to 0.001	A/V	0.001	F003	0
4E14	Raw Field Data AC7 Angle	0 to 0.1	degree	0.1	F002	0
4E15	Raw Field Data AC8 Mag	0 to 0.001	A/V	0.001	F003	0
4E17	Raw Field Data AC8 Angle	0 to 0.1	degree	0.1	F002	0
4E18	Raw Field Data DC1	0 to 0.001	V	0.001	F002	0
4E19	Raw Field Data DC2	0 to 0.001	V	0.001	F002	0
4E1A	Raw Field Data DC3	0 to 0.001	V	0.001	F002	0
4E1B	Raw Field Data FCI States (2 items)	0 to 1	---	1	F500	0
4E1D	Raw Field Data SI States	0 to 1	---	1	F500	0
4E1E	Raw Field Data SI Test States	0 to 1	---	1	F500	0
4E1F	Raw Field Data Brick ADC Temperature	0 to 1	degree	1	F002	0
4E20	Raw Field Data Brick Transceiver Temperature	0 to 1	degree	1	F002	0
4E21	Raw Field Data Brick Transceiver Voltage	0 to 0.01	V	0.01	F001	0
4E22	Raw Field Data Brick Transceiver Current	0 to 1	mA	1	F001	0
4E23	Raw Field Data Brick Tx Power	0 to 0.1	dBm	0.1	F002	0
4E24	Raw Field Data Brick Rx Power	0 to 0.1	dBm	0.1	F002	0
4E25	Raw Field Data Brick Diagnostics (2 items)	0 to 65535	---	1	F500	0
4E27	Raw Field Data Local Transceiver Temperature	0 to 1	degree	1	F002	0
4E28	Raw Field Data Local Transceiver Voltage	0 to 0.01	V	0.01	F001	0
4E29	Raw Field Data Local Transceiver Current	0 to 1	mA	1	F001	0
4E2A	Raw Field Data Local Tx Power	0 to 0.1	dBm	0.1	F002	0
4E2B	Raw Field Data Local Rx Power	0 to 0.1	dBm	0.1	F002	0
4E2C	Repeated for Field Unit 2					
4E58	Repeated for Field Unit 3					
4E84	Repeated for Field Unit 4					
4EB0	Repeated for Field Unit 5					
4EDC	Repeated for Field Unit 6					
4F08	Repeated for Field Unit 7					
4F34	Repeated for Field Unit 8					

Table B–10: MODBUS MEMORY MAP (Sheet 28 of 65)

ADDR	REGISTER NAME	RANGE	UNITS	STEP	FORMAT	DEFAULT
FlexLogic (Read/Write Setting)						
5000	FlexLogic Entry (512 items)	0 to 4294967295	---	1	F300	2097152
RTD Inputs (Read/Write Setting) (48 modules)						
5400	RTD Input 1 Function	0 to 1	---	1	F102	0 (Disabled)
5401	RTD Input 1 ID	---	---	---	F205	“RTD Ip 1“
5407	RTD Input 1 Type	0 to 3	---	1	F174	0 (100 ohm Platinum)
5414	...Repeated for RTD Input 2					
5428	...Repeated for RTD Input 3					
543C	...Repeated for RTD Input 4					
5450	...Repeated for RTD Input 5					
5464	...Repeated for RTD Input 6					
5478	...Repeated for RTD Input 7					
548C	...Repeated for RTD Input 8					
54A0	...Repeated for RTD Input 9					
54B4	...Repeated for RTD Input 10					
54C8	...Repeated for RTD Input 11					
54DC	...Repeated for RTD Input 12					
54F0	...Repeated for RTD Input 13					
5504	...Repeated for RTD Input 14					
5518	...Repeated for RTD Input 15					
552C	...Repeated for RTD Input 16					
5540	...Repeated for RTD Input 17					
5554	...Repeated for RTD Input 18					
5568	...Repeated for RTD Input 19					
557C	...Repeated for RTD Input 20					
5590	...Repeated for RTD Input 21					
55A4	...Repeated for RTD Input 22					
55B8	...Repeated for RTD Input 23					
55CC	...Repeated for RTD Input 24					
55E0	...Repeated for RTD Input 25					
55F4	...Repeated for RTD Input 26					
5608	...Repeated for RTD Input 27					
561C	...Repeated for RTD Input 28					
5630	...Repeated for RTD Input 29					
5644	...Repeated for RTD Input 30					
5658	...Repeated for RTD Input 31					
566C	...Repeated for RTD Input 32					
5680	...Repeated for RTD Input 33					
5694	...Repeated for RTD Input 34					
56A8	...Repeated for RTD Input 35					
56BC	...Repeated for RTD Input 36					
56D0	...Repeated for RTD Input 37					
56E4	...Repeated for RTD Input 38					
56F8	...Repeated for RTD Input 39					
570C	...Repeated for RTD Input 40					
5720	...Repeated for RTD Input 41					
5734	...Repeated for RTD Input 42					
5748	...Repeated for RTD Input 43					
575C	...Repeated for RTD Input 44					
5770	...Repeated for RTD Input 45					
5784	...Repeated for RTD Input 46					
5798	...Repeated for RTD Input 47					
57AC	...Repeated for RTD Input 48					

Table B–10: MODBUS MEMORY MAP (Sheet 29 of 65)

ADDR	REGISTER NAME	RANGE	UNITS	STEP	FORMAT	DEFAULT
FlexLogic Timers (Read/Write Setting) (32 modules)						
5800	FlexLogic Timer 1 Type	0 to 2	---	1	F129	0 (millisecond)
5801	FlexLogic Timer 1 Pickup Delay	0 to 60000	---	1	F001	0
5802	FlexLogic Timer 1 Dropout Delay	0 to 60000	---	1	F001	0
5803	Reserved (5 items)	0 to 65535	---	1	F001	0
5808	...Repeated for FlexLogic Timer 2					
5810	...Repeated for FlexLogic Timer 3					
5818	...Repeated for FlexLogic Timer 4					
5820	...Repeated for FlexLogic Timer 5					
5828	...Repeated for FlexLogic Timer 6					
5830	...Repeated for FlexLogic Timer 7					
5838	...Repeated for FlexLogic Timer 8					
5840	...Repeated for FlexLogic Timer 9					
5848	...Repeated for FlexLogic Timer 10					
5850	...Repeated for FlexLogic Timer 11					
5858	...Repeated for FlexLogic Timer 12					
5860	...Repeated for FlexLogic Timer 13					
5868	...Repeated for FlexLogic Timer 14					
5870	...Repeated for FlexLogic Timer 15					
5878	...Repeated for FlexLogic Timer 16					
5880	...Repeated for FlexLogic Timer 17					
5888	...Repeated for FlexLogic Timer 18					
5890	...Repeated for FlexLogic Timer 19					
5898	...Repeated for FlexLogic Timer 20					
58A0	...Repeated for FlexLogic Timer 21					
58A8	...Repeated for FlexLogic Timer 22					
58B0	...Repeated for FlexLogic Timer 23					
58B8	...Repeated for FlexLogic Timer 24					
58C0	...Repeated for FlexLogic Timer 25					
58C8	...Repeated for FlexLogic Timer 26					
58D0	...Repeated for FlexLogic Timer 27					
58D8	...Repeated for FlexLogic Timer 28					
58E0	...Repeated for FlexLogic Timer 29					
58E8	...Repeated for FlexLogic Timer 30					
58F0	...Repeated for FlexLogic Timer 31					
58F8	...Repeated for FlexLogic Timer 32					
Phase Time Overcurrent (Read/Write Grouped Setting) (6 modules)						
5900	Phase Time Overcurrent 1 Function	0 to 1	---	1	F102	0 (Disabled)
5901	Phase Time Overcurrent 1 Signal Source	0 to 5	---	1	F167	0 (SRC 1)
5902	Phase Time Overcurrent 1 Input	0 to 1	---	1	F122	0 (Phasor)
5903	Phase Time Overcurrent 1 Pickup	0 to 30	pu	0.001	F001	1000
5904	Phase Time Overcurrent 1 Curve	0 to 16	---	1	F103	0 (IEEE Mod Inv)
5905	Phase Time Overcurrent 1 Multiplier	0 to 600	---	0.01	F001	100
5906	Phase Time Overcurrent 1 Reset	0 to 1	---	1	F104	0 (Instantaneous)
5907	Phase Time Overcurrent 1 Voltage Restraint	0 to 1	---	1	F102	0 (Disabled)
5908	Phase TOC 1 Block For Each Phase (3 items)	0 to 4294967295	---	1	F300	0
590F	Phase Time Overcurrent 1 Target	0 to 2	---	1	F109	0 (Self-reset)
5910	Phase Time Overcurrent 1 Events	0 to 1	---	1	F102	0 (Disabled)
5911	Reserved (3 items)	0 to 1	---	1	F001	0
5914	...Repeated for Phase Time Overcurrent 2					
5928	...Repeated for Phase Time Overcurrent 3					
593C	...Repeated for Phase Time Overcurrent 4					
5950	...Repeated for Phase Time Overcurrent 5					
5964	...Repeated for Phase Time Overcurrent 6					

Table B–10: MODBUS MEMORY MAP (Sheet 30 of 65)

ADDR	REGISTER NAME	RANGE	UNITS	STEP	FORMAT	DEFAULT
Phase Instantaneous Overcurrent (Read/Write Grouped Setting) (12 modules)						
5A00	Phase Instantaneous Overcurrent 1 Function	0 to 1	---	1	F102	0 (Disabled)
5A01	Phase Instantaneous Overcurrent 1 Signal Source	0 to 5	---	1	F167	0 (SRC 1)
5A02	Phase Instantaneous Overcurrent 1 Pickup	0 to 30	pu	0.001	F001	1000
5A03	Phase Instantaneous Overcurrent 1 Delay	0 to 600	s	0.01	F001	0
5A04	Phase Instantaneous Overcurrent 1 Reset Delay	0 to 600	s	0.01	F001	0
5A05	Phase IOC1 Block For Each Phase (3 items)	0 to 4294967295	---	1	F300	0
5A0B	Phase Instantaneous Overcurrent 1 Target	0 to 2	---	1	F109	0 (Self-reset)
5A0C	Phase Instantaneous Overcurrent 1 Events	0 to 1	---	1	F102	0 (Disabled)
5A0D	Reserved (6 items)	0 to 1	---	1	F001	0
5A13	...Repeated for Phase Instantaneous Overcurrent 2					
5A26	...Repeated for Phase Instantaneous Overcurrent 3					
5A39	...Repeated for Phase Instantaneous Overcurrent 4					
5A4C	...Repeated for Phase Instantaneous Overcurrent 5					
5A5F	...Repeated for Phase Instantaneous Overcurrent 6					
5A72	...Repeated for Phase Instantaneous Overcurrent 7					
5A85	...Repeated for Phase Instantaneous Overcurrent 8					
5A98	...Repeated for Phase Instantaneous Overcurrent 9					
5AAB	...Repeated for Phase Instantaneous Overcurrent 10					
5ABE	...Repeated for Phase Instantaneous Overcurrent 11					
5AD1	...Repeated for Phase Instantaneous Overcurrent 12					
Neutral Time Overcurrent (Read/Write Grouped Setting) (6 modules)						
5B00	Neutral Time Overcurrent 1 Function	0 to 1	---	1	F102	0 (Disabled)
5B01	Neutral Time Overcurrent 1 Signal Source	0 to 5	---	1	F167	0 (SRC 1)
5B02	Neutral Time Overcurrent 1 Input	0 to 1	---	1	F122	0 (Phasor)
5B03	Neutral Time Overcurrent 1 Pickup	0 to 30	pu	0.001	F001	1000
5B04	Neutral Time Overcurrent 1 Curve	0 to 16	---	1	F103	0 (IEEE Mod Inv)
5B05	Neutral Time Overcurrent 1 Multiplier	0 to 600	---	0.01	F001	100
5B06	Neutral Time Overcurrent 1 Reset	0 to 1	---	1	F104	0 (Instantaneous)
5B07	Neutral Time Overcurrent 1 Block	0 to 4294967295	---	1	F300	0
5B09	Neutral Time Overcurrent 1 Target	0 to 2	---	1	F109	0 (Self-reset)
5B0A	Neutral Time Overcurrent 1 Events	0 to 1	---	1	F102	0 (Disabled)
5B0B	Reserved (6 items)	0 to 1	---	1	F001	0
5B11	...Repeated for Neutral Time Overcurrent 2					
5B22	...Repeated for Neutral Time Overcurrent 3					
5B33	...Repeated for Neutral Time Overcurrent 4					
5B44	...Repeated for Neutral Time Overcurrent 5					
5B55	...Repeated for Neutral Time Overcurrent 6					
Neutral Instantaneous Overcurrent (Read/Write Grouped Setting) (12 modules)						
5C00	Neutral Instantaneous Overcurrent 1 Function	0 to 1	---	1	F102	0 (Disabled)
5C01	Neutral Instantaneous Overcurrent 1 Signal Source	0 to 5	---	1	F167	0 (SRC 1)
5C02	Neutral Instantaneous Overcurrent 1 Pickup	0 to 30	pu	0.001	F001	1000
5C03	Neutral Instantaneous Overcurrent 1 Delay	0 to 600	s	0.01	F001	0
5C04	Neutral Instantaneous Overcurrent 1 Reset Delay	0 to 600	s	0.01	F001	0
5C05	Neutral Instantaneous Overcurrent 1 Block	0 to 4294967295	---	1	F300	0
5C07	Neutral Instantaneous Overcurrent 1 Target	0 to 2	---	1	F109	0 (Self-reset)
5C08	Neutral Instantaneous Overcurrent 1 Events	0 to 1	---	1	F102	0 (Disabled)
5C09	Reserved (8 items)	0 to 1	---	1	F001	0
5C11	...Repeated for Neutral Instantaneous Overcurrent 2					
5C22	...Repeated for Neutral Instantaneous Overcurrent 3					
5C33	...Repeated for Neutral Instantaneous Overcurrent 4					
5C44	...Repeated for Neutral Instantaneous Overcurrent 5					
5C55	...Repeated for Neutral Instantaneous Overcurrent 6					
5C66	...Repeated for Neutral Instantaneous Overcurrent 7					

Table B–10: MODBUS MEMORY MAP (Sheet 31 of 65)

ADDR	REGISTER NAME	RANGE	UNITS	STEP	FORMAT	DEFAULT
5C77	...Repeated for Neutral Instantaneous Overcurrent 8					
5C88	...Repeated for Neutral Instantaneous Overcurrent 9					
5C99	...Repeated for Neutral Instantaneous Overcurrent 10					
5CAA	...Repeated for Neutral Instantaneous Overcurrent 11					
5CBB	...Repeated for Neutral Instantaneous Overcurrent 12					
Ground Time Overcurrent (Read/Write Grouped Setting) (6 modules)						
5D00	Ground Time Overcurrent 1 Function	0 to 1	---	1	F102	0 (Disabled)
5D01	Ground Time Overcurrent 1 Signal Source	0 to 5	---	1	F167	0 (SRC 1)
5D02	Ground Time Overcurrent 1 Input	0 to 1	---	1	F122	0 (Phasor)
5D03	Ground Time Overcurrent 1 Pickup	0 to 30	pu	0.001	F001	1000
5D04	Ground Time Overcurrent 1 Curve	0 to 16	---	1	F103	0 (IEEE Mod Inv)
5D05	Ground Time Overcurrent 1 Multiplier	0 to 600	---	0.01	F001	100
5D06	Ground Time Overcurrent 1 Reset	0 to 1	---	1	F104	0 (Instantaneous)
5D07	Ground Time Overcurrent 1 Block	0 to 4294967295	---	1	F300	0
5D09	Ground Time Overcurrent 1 Target	0 to 2	---	1	F109	0 (Self-reset)
5D0A	Ground Time Overcurrent 1 Events	0 to 1	---	1	F102	0 (Disabled)
5D0B	Reserved (6 items)	0 to 1	---	1	F001	0
5D11	...Repeated for Ground Time Overcurrent 2					
5D22	...Repeated for Ground Time Overcurrent 3					
5D33	...Repeated for Ground Time Overcurrent 4					
5D44	...Repeated for Ground Time Overcurrent 5					
5D55	...Repeated for Ground Time Overcurrent 6					
Ground Instantaneous Overcurrent (Read/Write Grouped Setting) (12 modules)						
5DA0	Ground Instantaneous Overcurrent 1 Function	0 to 1	---	1	F102	0 (Disabled)
5DA1	Ground Instantaneous Overcurrent 1 Signal Source	0 to 5	---	1	F167	0 (SRC 1)
5DA2	Ground Instantaneous Overcurrent 1 Pickup	0 to 30	pu	0.001	F001	1000
5DA3	Ground Instantaneous Overcurrent 1 Delay	0 to 600	s	0.01	F001	0
5DA4	Ground Instantaneous Overcurrent 1 Reset Delay	0 to 600	s	0.01	F001	0
5DA5	Ground Instantaneous Overcurrent 1 Block	0 to 4294967295	---	1	F300	0
5DA7	Ground Instantaneous Overcurrent 1 Target	0 to 2	---	1	F109	0 (Self-reset)
5DA8	Ground Instantaneous Overcurrent 1 Events	0 to 1	---	1	F102	0 (Disabled)
5DA9	Reserved (8 items)	0 to 1	---	1	F001	0
5DB1	...Repeated for Ground Instantaneous Overcurrent 2					
5DC2	...Repeated for Ground Instantaneous Overcurrent 3					
5DD3	...Repeated for Ground Instantaneous Overcurrent 4					
5DE4	...Repeated for Ground Instantaneous Overcurrent 5					
5DF5	...Repeated for Ground Instantaneous Overcurrent 6					
5E06	...Repeated for Ground Instantaneous Overcurrent 7					
5E17	...Repeated for Ground Instantaneous Overcurrent 8					
5E28	...Repeated for Ground Instantaneous Overcurrent 9					
5E39	...Repeated for Ground Instantaneous Overcurrent 10					
5E4A	...Repeated for Ground Instantaneous Overcurrent 11					
5E5B	...Repeated for Ground Instantaneous Overcurrent 12					
Setting Groups (Read/Write Setting)						
5F70	Setting Group for Modbus Comms (0 means group 1)	0 to 5	---	1	F001	0
5F71	Setting Groups Block	0 to 4294967295	---	1	F300	0
5F73	FlexLogic Operands to Activate Groups 2 through 6 (5 items)	0 to 4294967295	---	1	F300	0
5F7D	Setting Group Function	0 to 1	---	1	F102	0 (Disabled)
5F7E	Setting Group Events	0 to 1	---	1	F102	0 (Disabled)
Setting Groups (Read Only)						
5F7F	Current Setting Group	0 to 5	---	1	F001	0
Setting Group Names (Read/Write Setting)						
5F8C	Setting Group 1 Name	---	---	---	F203	(none)

Table B–10: MODBUS MEMORY MAP (Sheet 32 of 65)

ADDR	REGISTER NAME	RANGE	UNITS	STEP	FORMAT	DEFAULT
5F94	Setting Group 2 Name	---	---	---	F203	(none)
5F9C	Setting Group 3 Name	---	---	---	F203	(none)
5FA4	Setting Group 4 Name	---	---	---	F203	(none)
5FAC	Setting Group 5 Name	---	---	---	F203	(none)
5FB4	Setting Group 6 Name	---	---	---	F203	(none)
Negative Sequence Time Overcurrent (Read/Write Grouped Setting) (2 modules)						
6300	Negative Sequence Time Overcurrent 1 Function	0 to 1	---	1	F102	0 (Disabled)
6301	Negative Sequence Time Overcurrent 1 Signal Source	0 to 5	---	1	F167	0 (SRC 1)
6302	Negative Sequence Time Overcurrent 1 Pickup	0 to 30	pu	0.001	F001	1000
6303	Negative Sequence Time Overcurrent 1 Curve	0 to 16	---	1	F103	0 (IEEE Mod Inv)
6304	Negative Sequence Time Overcurrent 1 Multiplier	0 to 600	---	0.01	F001	100
6305	Negative Sequence Time Overcurrent 1 Reset	0 to 1	---	1	F104	0 (Instantaneous)
6306	Negative Sequence Time Overcurrent 1 Block	0 to 4294967295	---	1	F300	0
6308	Negative Sequence Time Overcurrent 1 Target	0 to 2	---	1	F109	0 (Self-reset)
6309	Negative Sequence Time Overcurrent 1 Events	0 to 1	---	1	F102	0 (Disabled)
630A	Reserved (7 items)	0 to 1	---	1	F001	0
6311	...Repeated for Negative Sequence Time Overcurrent 2					
Capacitor Bank Overvoltage Settings (Read/Write Grouped Setting) (3 modules)						
6330	Bank Phase Overvoltage 1 Function	0 to 1	---	1	F102	0 (Disabled)
6331	Bank Phase Overvoltage 1 Bus Source	0 to 5	---	1	F167	0 (SRC 1)
6332	Bank Phase Overvoltage 1 Neutral Source	0 to 5	---	1	F167	0 (SRC 1)
6333	Bank Phase Overvoltage 1 Bank Ground	0 to 2	---	1	F093	0 (Grounded)
6334	Bank Phase Overvoltage 1 Curve	0 to 3	---	1	F094	0 (FlexCurve A)
6335	Bank Phase Overvoltage 1 Curve Time Multiplier	1 to 10	---	0.01	F001	100
6336	Bank Phase Overvoltage 1 Stage 1A Pickup	0.8 to 2	pu	0.001	F001	1050
6337	Bank Phase Overvoltage 1 Stage 2A Pickup	0.8 to 2	pu	0.001	F001	1100
6338	Bank Phase Overvoltage 1 Stage 3A Pickup	0.8 to 2	pu	0.001	F001	1200
6339	Bank Phase Overvoltage 1 Stage 4A Pickup	0.8 to 2	pu	0.001	F001	1050
633A	Bank Phase Overvoltage 1 Stage 1B Pickup	0.8 to 2	pu	0.001	F001	1050
633B	Bank Phase Overvoltage 1 Stage 2B Pickup	0.8 to 2	pu	0.001	F001	1100
633C	Bank Phase Overvoltage 1 Stage 3B Pickup	0.8 to 2	pu	0.001	F001	1200
633D	Bank Phase Overvoltage 1 Stage 4B Pickup	0.8 to 2	pu	0.001	F001	1050
633E	Bank Phase Overvoltage 1 Stage 1C Pickup	0.8 to 2	pu	0.001	F001	1050
633F	Bank Phase Overvoltage 1 Stage 2C Pickup	0.8 to 2	pu	0.001	F001	1100
6340	Bank Phase Overvoltage 1 Stage 3C Pickup	0.8 to 2	pu	0.001	F001	1200
6341	Bank Phase Overvoltage 1 Stage 4C Pickup	0.8 to 2	pu	0.001	F001	1050
6342	Bank Phase Overvoltage 1 Stage 1 Pickup Delay	0 to 600	s	0.01	F001	6000
6343	Bank Phase Overvoltage 1 Stage 2 Pickup Delay	0 to 600	s	0.01	F001	1000
6344	Bank Phase Overvoltage 1 Stage 3 Pickup Delay	0 to 600	s	0.01	F001	200
6345	Bank Phase Overvoltage 1 Dropout Delay	0 to 600	s	0.01	F001	25
6346	Bank Phase Overvoltage 1 Block	0 to 4294967295	---	1	F300	0
6348	Bank Phase Overvoltage 1 Target	0 to 2	---	1	F109	0 (Self-reset)
6349	Bank Phase Overvoltage 1 Events	0 to 1	---	1	F102	0 (Disabled)
634A	...Repeated for Bank Phase Overvoltage 2					
6364	...Repeated for Bank Phase Overvoltage 3					
Capacitor Bank Overvoltage Actuals (Read Only) (3 modules)						
6390	Bank Overvoltage 1 Phase A Operate Voltage	0 to 65.535	pu	0.001	F001	0
6391	Bank Overvoltage 1 Phase B Operate Voltage	0 to 65.535	pu	0.001	F001	0
6392	Bank Overvoltage 1 Phase C Operate Voltage	0 to 65.535	pu	0.001	F001	0
6393	...Repeated for Bank Overvoltage 2					
6396	...Repeated for Bank Overvoltage 3					
Negative Sequence Instantaneous Overcurrent (Read/Write Grouped Setting) (2 modules)						
63C0	Negative Sequence Instantaneous OC 1 Function	0 to 1	---	1	F102	0 (Disabled)
63C1	Negative Sequence Instantaneous OC 1 Signal Source	0 to 5	---	1	F167	0 (SRC 1)

Table B–10: MODBUS MEMORY MAP (Sheet 33 of 65)

ADDR	REGISTER NAME	RANGE	UNITS	STEP	FORMAT	DEFAULT
63C2	Negative Sequence Instantaneous Overcurrent 1 Pickup	0 to 30	pu	0.001	F001	1000
63C3	Negative Sequence Instantaneous Overcurrent 1 Delay	0 to 600	s	0.01	F001	0
63C4	Negative Sequence Instantaneous OC 1 Reset Delay	0 to 600	s	0.01	F001	0
63C5	Negative Sequence Instantaneous Overcurrent 1 Block	0 to 4294967295	---	1	F300	0
63C7	Negative Sequence Instantaneous Overcurrent 1 Target	0 to 2	---	1	F109	0 (Self-reset)
63C8	Negative Sequence Instantaneous Overcurrent 1 Events	0 to 1	---	1	F102	0 (Disabled)
63C9	Reserved (8 items)	0 to 1	---	1	F001	0
63D1	...Repeated for Negative Sequence Instantaneous OC 2					
Negative Sequence Overvoltage (Read/Write Grouped Setting) (3 modules)						
6440	Negative Sequence Overvoltage 1 Function	0 to 1	---	1	F102	0 (Disabled)
6441	Negative Sequence Overvoltage 1 Source	0 to 5	---	1	F167	0 (SRC 1)
6442	Negative Sequence Overvoltage 1 Pickup	0 to 1.25	pu	0.001	F001	300
6443	Negative Sequence Overvoltage 1 Pickup Delay	0 to 600	s	0.01	F001	50
6444	Negative Sequence Overvoltage 1 Reset Delay	0 to 600	s	0.01	F001	50
6445	Negative Sequence Overvoltage 1 Block	0 to 4294967295	---	1	F300	0
6447	Negative Sequence Overvoltage 1 Target	0 to 2	---	1	F109	0 (Self-reset)
6448	Negative Sequence Overvoltage 1 Events	0 to 1	---	1	F102	0 (Disabled)
6449	...Repeated for Negative Sequence Overvoltage 2					
6452	...Repeated for Negative Sequence Overvoltage 3					
Time of Day Timer (Read/Write Setting) (5 modules)						
6570	Time of Day Timer 1 Function	0 to 1	---	1	F102	0 (Disabled)
6571	Time of Day Timer 1 Start Time	0 to 2359	---	1	F050	0
6573	Time of Day Timer 1 Stop Time	0 to 2359	---	1	F050	2359
6575	Time of Day Timer 1 Targets	0 to 2	---	1	F109	0 (Self-reset)
6576	Time of Day Timer 1 Events	0 to 1	---	1	F102	0 (Disabled)
6577	...Repeated for Time of Day Timer 2					
657E	...Repeated for Time of Day Timer 3					
6585	...Repeated for Time of Day Timer 4					
658C	...Repeated for Time of Day Timer 5					
Phase Undervoltage (Read/Write Grouped Setting) (3 modules)						
7000	Phase Undervoltage 1 Function	0 to 1	---	1	F102	0 (Disabled)
7001	Phase Undervoltage 1 Signal Source	0 to 5	---	1	F167	0 (SRC 1)
7002	Phase Undervoltage 1 Pickup	0 to 3	pu	0.001	F001	1000
7003	Phase Undervoltage 1 Curve	0 to 1	---	1	F111	0 (Definite Time)
7004	Phase Undervoltage 1 Delay	0 to 600	s	0.01	F001	100
7005	Phase Undervoltage 1 Minimum Voltage	0 to 3	pu	0.001	F001	100
7006	Phase Undervoltage 1 Block	0 to 4294967295	---	1	F300	0
7008	Phase Undervoltage 1 Target	0 to 2	---	1	F109	0 (Self-reset)
7009	Phase Undervoltage 1 Events	0 to 1	---	1	F102	0 (Disabled)
700A	Phase Undervoltage 1 Measurement Mode	0 to 1	---	1	F186	0 (Phase to Ground)
700B	Reserved (6 items)	0 to 1	---	1	F001	0
7013	...Repeated for Phase Undervoltage 2					
7022	...Repeated for Phase Undervoltage 3					
Phase Overvoltage (Read/Write Grouped Setting) (3 modules)						
7040	Phase Overvoltage 1 Function	0 to 1	---	1	F102	0 (Disabled)
7041	Phase Overvoltage 1 Source	0 to 5	---	1	F167	0 (SRC 1)
7042	Phase Overvoltage 1 Pickup	0 to 3	pu	0.001	F001	1000
7043	Phase Overvoltage 1 Delay	0 to 600	s	0.01	F001	100
7044	Phase Overvoltage 1 Reset Delay	0 to 600	s	0.01	F001	100
7045	Phase Overvoltage 1 Block	0 to 4294967295	---	1	F300	0
7047	Phase Overvoltage 1 Target	0 to 2	---	1	F109	0 (Self-reset)
7048	Phase Overvoltage 1 Events	0 to 1	---	1	F102	0 (Disabled)
7049	...Repeated for Phase Overvoltage 2					

Table B–10: MODBUS MEMORY MAP (Sheet 34 of 65)

ADDR	REGISTER NAME	RANGE	UNITS	STEP	FORMAT	DEFAULT
7052	...Repeated for Phase Overvoltage 3					
Phase Directional Overcurrent (Read/Write Grouped Setting) (2 modules)						
7200	Phase Directional Overcurrent 1 Function	0 to 1	---	1	F102	0 (Disabled)
7201	Phase Directional Overcurrent 1 Source	0 to 5	---	1	F167	0 (SRC 1)
7202	Phase Directional Overcurrent 1 Block	0 to 4294967295	---	1	F300	0
7204	Phase Directional Overcurrent 1 ECA	0 to 359	---	1	F001	30
7205	Phase Directional Overcurrent 1 Pol V Threshold	0 to 3	pu	0.001	F001	700
7206	Phase Directional Overcurrent 1 Block Overcurrent	0 to 1	---	1	F126	0 (No)
7207	Phase Directional Overcurrent 1 Target	0 to 2	---	1	F109	0 (Self-reset)
7208	Phase Directional Overcurrent 1 Events	0 to 1	---	1	F102	0 (Disabled)
7209	Reserved (8 items)	0 to 1	---	1	F001	0
7211	...Repeated for Phase Directional Overcurrent 2					
Neutral Directional Overcurrent (Read/Write Grouped Setting)						
7230	Neutral Directional Overcurrent 1 Function	0 to 1	---	1	F102	0 (Disabled)
7231	Neutral Directional Overcurrent 1 Source	0 to 5	---	1	F167	0 (SRC 1)
7232	Neutral Directional Overcurrent 1 Polarizing	0 to 4	---	1	F230	0 (Voltage)
7233	Neutral Directional Overcurrent 1 Forward ECA	-90 to 90	° Lag	1	F002	75
7234	Neutral Directional Overcurrent 1 Forward Limit Angle	40 to 90	degrees	1	F001	90
7235	Neutral Directional Overcurrent 1 Forward Pickup	0.006 to 30	pu	0.001	F001	50
7236	Neutral Directional Overcurrent 1 Reverse Limit Angle	40 to 90	degrees	1	F001	90
7237	Neutral Directional Overcurrent 1 Reverse Pickup	0.006 to 30	pu	0.001	F001	50
7238	Neutral Directional Overcurrent 1 Target	0 to 2	---	1	F109	0 (Self-reset)
7239	Neutral Directional Overcurrent 1 Block	0 to 4294967295	---	1	F300	0
723B	Neutral Directional Overcurrent 1 Events	0 to 1	---	1	F102	0 (Disabled)
723C	Neutral Directional Overcurrent 1 Polarizing Voltage	0 to 1	---	1	F231	0 (Calculated V0)
723D	Neutral Directional Overcurrent 1 Op Current	0 to 1	---	1	F196	0 (Calculated 3I0)
723E	Neutral Directional Overcurrent 1 Offset	0 to 250	ohms	0.01	F001	0
723F	Neutral Directional Overcurrent 1 Pos Seq Restraint	0 to 0.5	---	0.001	F001	63
7240	Reserved	0 to 1	---	1	F001	0
Negative-Sequence Directional Overcurrent (Read/Write Grouped Settings) (2 modules)						
7260	Negative Sequence Directional Overcurrent 1 Function	0 to 1	---	1	F102	0 (Disabled)
7261	Negative Sequence Directional Overcurrent 1 Source	0 to 5	---	1	F167	0 (SRC 1)
7262	Negative Sequence Directional Overcurrent 1 Type	0 to 1	---	1	F179	0 (Neg Sequence)
7263	Neg Sequence Directional Overcurrent 1 Forward ECA	0 to 90	° Lag	1	F002	75
7264	Neg Seq Directional Overcurrent 1 Forward Limit Angle	40 to 90	degrees	1	F001	90
7265	Neg Sequence Directional Overcurrent 1 Forward Pickup	0.015 to 30	pu	0.005	F001	50
7266	Neg Seq Directional Overcurrent 1 Reverse Limit Angle	40 to 90	degrees	1	F001	90
7267	Neg Sequence Directional Overcurrent 1 Reverse Pickup	0.015 to 30	pu	0.005	F001	50
7268	Negative Sequence Directional Overcurrent 1 Target	0 to 2	---	1	F109	0 (Self-reset)
7269	Negative Sequence Directional Overcurrent 1 Block	0 to 4294967295	---	1	F300	0
726B	Negative Sequence Directional Overcurrent 1 Events	0 to 1	---	1	F102	0 (Disabled)
726C	Negative Sequence Directional Overcurrent 1 Offset	0 to 250	ohms	0.01	F001	0
726D	Negative Sequence Directional Overcurrent 1 Pos Seq Restraint	0 to 0.5	---	0.001	F001	63
726E	Reserved (3 items)	0 to 1	---	1	F001	0
7271	...Repeated for Neg Seq Directional Overcurrent 2					
Disconnect (Breaker) Switch (Read/Write Setting) (24 modules)						
74A0	Disconnect Switch 1 Function	0 to 1	---	1	F102	0 (Disabled)
74A1	Disconnect Switch 1 Name	---	---	---	F206	"SW 1"
74A4	Disconnect Switch 1 Mode	0 to 1	---	1	F157	0 (3-Pole)
74A5	Disconnect Switch 1 Open	0 to 4294967295	---	1	F300	0
74A7	Disconnect Switch 1 Block Open	0 to 4294967295	---	1	F300	0
74A9	Disconnect Switch 1 Close	0 to 4294967295	---	1	F300	0

Table B–10: MODBUS MEMORY MAP (Sheet 35 of 65)

ADDR	REGISTER NAME	RANGE	UNITS	STEP	FORMAT	DEFAULT
74AB	Disconnect Switch 1 Block Close	0 to 4294967295	---	1	F300	0
74AD	Disconnect Switch 1 Phase A / Three-pole Closed	0 to 4294967295	---	1	F300	0
74AF	Disconnect Switch 1 Phase A / Three-pole Opened	0 to 4294967295	---	1	F300	0
74B1	Disconnect Switch 1 Phase B Closed	0 to 4294967295	---	1	F300	0
74B3	Disconnect Switch 1 Phase B Opened	0 to 4294967295	---	1	F300	0
74B5	Disconnect Switch 1 Phase C Closed	0 to 4294967295	---	1	F300	0
74B7	Disconnect Switch 1 Phase C Opened	0 to 4294967295	---	1	F300	0
74B9	Disconnect Switch 1 Operate Time	0 to 65.535	s	0.001	F001	70
74BA	Disconnect Switch 1 Alarm Delay	0 to 65.535	s	0.001	F003	0
74BC	Disconnect Switch 1 Events	0 to 1	---	1	F102	0 (Disabled)
74BD	Reserved (2 items)	---	---	---	F001	0
74BF	...Repeated for Disconnect Switch 2					
74DE	...Repeated for Disconnect Switch 3					
74FD	...Repeated for Disconnect Switch 4					
751C	...Repeated for Disconnect Switch 5					
753B	...Repeated for Disconnect Switch 6					
755A	...Repeated for Disconnect Switch 7					
7579	...Repeated for Disconnect Switch 8					
7598	...Repeated for Disconnect Switch 9					
75B7	...Repeated for Disconnect Switch 10					
75D6	...Repeated for Disconnect Switch 11					
75F5	...Repeated for Disconnect Switch 12					
7614	...Repeated for Disconnect Switch 13					
7633	...Repeated for Disconnect Switch 14					
7652	...Repeated for Disconnect Switch 15					
7671	...Repeated for Disconnect Switch 16					
7690	...Repeated for Disconnect Switch 17					
76AF	...Repeated for Disconnect Switch 18					
76CE	...Repeated for Disconnect Switch 19					
76ED	...Repeated for Disconnect Switch 20					
770C	...Repeated for Disconnect Switch 21					
772B	...Repeated for Disconnect Switch 22					
774A	...Repeated for Disconnect Switch 23					
7769	...Repeated for Disconnect Switch 24					
Thermal Overload Protection (Read/Write Settings) (2 modules)						
7788	Thermal Protection 1 Function	0 to 1	---	1	F102	0 (Disabled)
7789	Thermal Protection 1 Source	0 to 5	---	1	F167	0 (SRC 1)
778A	Thermal Protection 1 Base Current	0.2 to 3	pu	0.01	F001	80
778B	Thermal Protection 1 K Factor	1 to 1.2	---	0.05	F001	110
778C	Thermal Protection 1 Trip Time Constant	0 to 1000	min.	1	F001	45
778D	Thermal Protection 1 Reset Time Constant	0 to 1000	min.	1	F001	45
778E	Thermal Protection 1 Minimum Reset Time	0 to 1000	min.	1	F001	20
778F	Thermal Protection 1 Reset	0 to 4294967295	---	1	F300	0
7791	Thermal Protection 1 Block	0 to 4294967295	---	1	F300	0
7793	Thermal Protection 1 Target	0 to 2	---	1	F109	0 (Self-reset)
7794	Thermal Protection 1 Events	0 to 1	---	1	F102	0 (Disabled)
7795	Reserved (2 items)	---	---	---	F001	0
7797	Repeated for Thermal Protection 2					
Ohm Inputs (Read/Write Setting) (2 modules)						
77F8	Ohm Inputs 1 Function	0 to 1	---	1	F102	0 (Disabled)
77F9	Ohm Inputs 1 ID	---	---	---	F205	"Ohm Ip 1 "
77FF	Reserved (9 items)	0 to 65535	---	1	F001	0
7808	...Repeated for Ohm Inputs 2					

Table B–10: MODBUS MEMORY MAP (Sheet 36 of 65)

ADDR	REGISTER NAME	RANGE	UNITS	STEP	FORMAT	DEFAULT
User Programmable Pushbuttons (Read/Write Setting) (16 modules)						
7B60	User Programmable Pushbutton 1 Function	0 to 2	---	1	F137	0 (Disabled)
7B61	User Programmable Pushbutton 1 Top Line	---	---	---	F202	(none)
7B6B	User Programmable Pushbutton 1 On Text	---	---	---	F202	(none)
7B75	User Programmable Pushbutton 1 Off Text	---	---	---	F202	(none)
7B7F	User Programmable Pushbutton 1 Drop-Out Time	0 to 60	s	0.05	F001	0
7B80	User Programmable Pushbutton 1 Target	0 to 2	---	1	F109	0 (Self-reset)
7B81	User Programmable Pushbutton 1 Events	0 to 1	---	1	F102	0 (Disabled)
7B82	User Programmable Pushbutton 1 LED Operand	0 to 4294967295	---	1	F300	0
7B84	User Programmable Pushbutton 1 Autoreset Delay	0.2 to 600	s	0.1	F001	10
7B85	User Programmable Pushbutton 1 Autoreset Function	0 to 1	---	1	F102	0 (Disabled)
7B86	User Programmable Pushbutton 1 Local Lock Operand	0 to 4294967295	---	1	F300	0
7B88	User Programmable Pushbutton 1 Message Priority	0 to 2	---	1	F220	0 (Disabled)
7B89	User Programmable Pushbutton 1 Remote Lock Operand	0 to 4294967295	---	1	F300	0
7B8B	User Programmable Pushbutton 1 Reset Operand	0 to 4294967295	---	1	F300	0
7B8D	User Programmable Pushbutton 1 Set Operand	0 to 4294967295	---	1	F300	0
7B8F	User Programmable Pushbutton 1 Hold	0 to 10	s	0.1	F001	1
7B90	...Repeated for User Programmable Pushbutton 2					
7BC0	...Repeated for User Programmable Pushbutton 3					
7BF0	...Repeated for User Programmable Pushbutton 4					
7C20	...Repeated for User Programmable Pushbutton 5					
7C50	...Repeated for User Programmable Pushbutton 6					
7C80	...Repeated for User Programmable Pushbutton 7					
7CB0	...Repeated for User Programmable Pushbutton 8					
7DE0	...Repeated for User Programmable Pushbutton 9					
7D10	...Repeated for User Programmable Pushbutton 10					
7D40	...Repeated for User Programmable Pushbutton 11					
7D70	...Repeated for User Programmable Pushbutton 12					
7DA0	...Repeated for User Programmable Pushbutton 13					
7DD0	...Repeated for User Programmable Pushbutton 14					
7E00	...Repeated for User Programmable Pushbutton 15					
7E30	...Repeated for User Programmable Pushbutton 16					
Neutral Overvoltage (Read/Write Grouped Setting) (3 modules)						
7F00	Neutral Overvoltage 1 Function	0 to 1	---	1	F102	0 (Disabled)
7F01	Neutral Overvoltage 1 Signal Source	0 to 5	---	1	F167	0 (SRC 1)
7F02	Neutral Overvoltage 1 Pickup	0 to 3	pu	0.001	F001	300
7F03	Neutral Overvoltage 1 Pickup Delay	0 to 600	s	0.01	F001	100
7F04	Neutral Overvoltage 1 Reset Delay	0 to 600	s	0.01	F001	100
7F05	Neutral Overvoltage 1 Block	0 to 4294967295	---	1	F300	0
7F07	Neutral Overvoltage 1 Target	0 to 2	---	1	F109	0 (Self-reset)
7F08	Neutral Overvoltage 1 Events	0 to 1	---	1	F102	0 (Disabled)
7F09	Neutral Overvoltage 1 Curves	0 to 3	---	1	F116	0 (Definite Time)
7F0A	Reserved (7 items)	0 to 65535	---	1	F001	0
7F11	...Repeated for Neutral Overvoltage 2					
7F22	...Repeated for Neutral Overvoltage 3					
Auxiliary Overvoltage (Read/Write Grouped Setting) (3 modules)						
7FA0	Auxiliary Overvoltage 1 Function	0 to 1	---	1	F102	0 (Disabled)
7FA1	Auxiliary Overvoltage 1 Signal Source	0 to 5	---	1	F167	0 (SRC 1)
7FA2	Auxiliary Overvoltage 1 Pickup	0 to 3	pu	0.001	F001	300
7FA3	Auxiliary Overvoltage 1 Pickup Delay	0 to 600	s	0.01	F001	100
7FA4	Auxiliary Overvoltage 1 Reset Delay	0 to 600	s	0.01	F001	100
7FA5	Auxiliary Overvoltage 1 Block	0 to 4294967295	---	1	F300	0
7FA7	Auxiliary Overvoltage 1 Target	0 to 2	---	1	F109	0 (Self-reset)
7FA8	Auxiliary Overvoltage 1 Events	0 to 1	---	1	F102	0 (Disabled)

Table B–10: MODBUS MEMORY MAP (Sheet 37 of 65)

ADDR	REGISTER NAME	RANGE	UNITS	STEP	FORMAT	DEFAULT
7FA9	Reserved (8 items)	0 to 65535	---	1	F001	0
7FB1	...Repeated for Auxiliary Overvoltage 2					
7FC2	...Repeated for Auxiliary Overvoltage 3					
Frequency (Read Only)						
8000	Tracking Frequency	2 to 90	Hz	0.01	F001	0
Temp Monitor Actual Values (Read Only Non-Volatile)						
81C0	Reserved Register T1	-55 to 125	C	1	F002	-55
81C1	Reserved Register T2	-55 to 125	C	1	F002	125
81C2	Reserved Register T3	-2147483647 to 2147483647	---	1	F004	0
81C4	Reserved Register T4	0 to 4294967295	---	1	F003	0
81C6	Reserved Register T5	0 to 4294967295	---	1	F003	0
81C8	Reserved Register T6	0 to 4294967295	---	1	F003	0
81CA	Reserved Register T7	0 to 4294967295	---	1	F003	0
81CC	Reserved Register T8	0 to 4294967295	---	1	F003	0
Breaker Failure (Read/Write Grouped Setting)						
8600	Breaker Failure 1 Function	0 to 1	---	1	F102	0 (Disabled)
8601	Breaker Failure 1 Mode	0 to 1	---	1	F157	0 (3-Pole)
8602	Breaker Failure 1 Source	0 to 5	---	1	F167	0 (SRC 1)
8603	Breaker Failure 1 Amp Supervision	0 to 1	---	1	F126	1 (Yes)
8604	Breaker Failure 1 Use Seal-In	0 to 1	---	1	F126	1 (Yes)
8605	Breaker Failure 1 Three Pole Initiate	0 to 4294967295	---	1	F300	0
8607	Breaker Failure 1 Block	0 to 4294967295	---	1	F300	0
8609	Breaker Failure 1 Phase Amp Supv Pickup	0.001 to 30	pu	0.001	F001	1050
860A	Breaker Failure 1 Neutral Amp Supv Pickup	0.001 to 30	pu	0.001	F001	1050
860B	Breaker Failure 1 Use Timer 1	0 to 1	---	1	F126	1 (Yes)
860C	Breaker Failure 1 Timer 1 Pickup	0 to 65.535	s	0.001	F001	0
860D	Breaker Failure 1 Use Timer 2	0 to 1	---	1	F126	1 (Yes)
860E	Breaker Failure 1 Timer 2 Pickup	0 to 65.535	s	0.001	F001	0
860F	Breaker Failure 1 Use Timer 3	0 to 1	---	1	F126	1 (Yes)
8610	Breaker Failure 1 Timer 3 Pickup	0 to 65.535	s	0.001	F001	0
8611	Breaker Failure 1 Breaker Status 1 Phase A/3P	0 to 4294967295	---	1	F300	0
8613	Breaker Failure 1 Breaker Status 2 Phase A/3P	0 to 4294967295	---	1	F300	0
8615	Breaker Failure 1 Breaker Test On	0 to 4294967295	---	1	F300	0
8617	Breaker Failure 1 Phase Amp Hiset Pickup	0.001 to 30	pu	0.001	F001	1050
8618	Breaker Failure 1 Neutral Amp Hiset Pickup	0.001 to 30	pu	0.001	F001	1050
8619	Breaker Failure 1 Phase Amp Loset Pickup	0.001 to 30	pu	0.001	F001	1050
861A	Breaker Failure 1 Neutral Amp Loset Pickup	0.001 to 30	pu	0.001	F001	1050
861B	Breaker Failure 1 Loset Time	0 to 65.535	s	0.001	F001	0
861C	Breaker Failure 1 Trip Dropout Delay	0 to 65.535	s	0.001	F001	0
861D	Breaker Failure 1 Target	0 to 2	---	1	F109	0 (Self-reset)
861E	Breaker Failure 1 Events	0 to 1	---	1	F102	0 (Disabled)
861F	Breaker Failure 1 Phase A Initiate	0 to 4294967295	---	1	F300	0
8621	Breaker Failure 1 Phase B Initiate	0 to 4294967295	---	1	F300	0
8623	Breaker Failure 1 Phase C Initiate	0 to 4294967295	---	1	F300	0
8625	Breaker Failure 1 Breaker Status 1 Phase B	0 to 4294967295	---	1	F300	0
8627	Breaker Failure 1 Breaker Status 1 Phase C	0 to 4294967295	---	1	F300	0
8629	Breaker Failure 1 Breaker Status 2 Phase B	0 to 4294967295	---	1	F300	0
862B	Breaker Failure 1 Breaker Status 2 Phase C	0 to 4294967295	---	1	F300	0
FlexState Settings (Read/Write Setting)						
8800	FlexState Parameters (256 items)	0 to 4294967295	---	1	F300	0
Digital Elements (Read/Write Setting) (48 modules)						
8A00	Digital Element 1 Function	0 to 1	---	1	F102	0 (Disabled)
8A01	Digital Element 1 Name	---	---	---	F203	“Dig Element 1“

Table B–10: MODBUS MEMORY MAP (Sheet 38 of 65)

ADDR	REGISTER NAME	RANGE	UNITS	STEP	FORMAT	DEFAULT
8A09	Digital Element 1 Input	0 to 4294967295	---	1	F300	0
8A0B	Digital Element 1 Pickup Delay	0 to 999999.999	s	0.001	F003	0
8A0D	Digital Element 1 Reset Delay	0 to 999999.999	s	0.001	F003	0
8A0F	Digital Element 1 Block	0 to 4294967295	---	1	F300	0
8A11	Digital Element 1 Target	0 to 2	---	1	F109	0 (Self-reset)
8A12	Digital Element 1 Events	0 to 1	---	1	F102	0 (Disabled)
8A13	Digital Element 1 Pickup LED	0 to 1	---	1	F102	1 (Enabled)
8A14	Reserved (2 items)	---	---	---	F001	0
8A16	...Repeated for Digital Element 2					
8A2C	...Repeated for Digital Element 3					
8A42	...Repeated for Digital Element 4					
8A58	...Repeated for Digital Element 5					
8A6E	...Repeated for Digital Element 6					
8A84	...Repeated for Digital Element 7					
8A9A	...Repeated for Digital Element 8					
8AB0	...Repeated for Digital Element 9					
8AC6	...Repeated for Digital Element 10					
8ADC	...Repeated for Digital Element 11					
8AF2	...Repeated for Digital Element 12					
8B08	...Repeated for Digital Element 13					
8B1E	...Repeated for Digital Element 14					
8B34	...Repeated for Digital Element 15					
8B4A	...Repeated for Digital Element 16					
8B60	...Repeated for Digital Element 17					
8B76	...Repeated for Digital Element 18					
8B8C	...Repeated for Digital Element 19					
8BA2	...Repeated for Digital Element 20					
8BB8	...Repeated for Digital Element 21					
8BCE	...Repeated for Digital Element 22					
8BE4	...Repeated for Digital Element 23					
8BFA	...Repeated for Digital Element 24					
8C10	...Repeated for Digital Element 25					
8C26	...Repeated for Digital Element 26					
8C3C	...Repeated for Digital Element 27					
8C52	...Repeated for Digital Element 28					
8C68	...Repeated for Digital Element 29					
8C7E	...Repeated for Digital Element 30					
8C94	...Repeated for Digital Element 31					
8CAA	...Repeated for Digital Element 32					
8CC0	...Repeated for Digital Element 33					
8CD6	...Repeated for Digital Element 34					
8CEC	...Repeated for Digital Element 35					
8D02	...Repeated for Digital Element 36					
8D18	...Repeated for Digital Element 37					
8D2E	...Repeated for Digital Element 38					
8D44	...Repeated for Digital Element 39					
8D5A	...Repeated for Digital Element 40					
8D70	...Repeated for Digital Element 41					
8D86	...Repeated for Digital Element 42					
8D9C	...Repeated for Digital Element 43					
8DB2	...Repeated for Digital Element 44					
8DC8	...Repeated for Digital Element 45					
8DDE	...Repeated for Digital Element 46					
8DF4	...Repeated for Digital Element 47					

Table B–10: MODBUS MEMORY MAP (Sheet 39 of 65)

ADDR	REGISTER NAME	RANGE	UNITS	STEP	FORMAT	DEFAULT
8E0A	...Repeated for Digital Element 48					
Trip Bus (Read/Write Setting) (6 modules)						
8ED0	Trip Bus 1 Function	0 to 1	---	1	F102	0 (Disabled)
8ED1	Trip Bus 1 Block	0 to 4294967295	---	1	F300	0
8ED3	Trip Bus 1 Pickup Delay	0 to 600	s	0.01	F001	0
8ED4	Trip Bus 1 Reset Delay	0 to 600	s	0.01	F001	0
8ED5	Trip Bus 1 Input (16 items)	0 to 4294967295	---	1	F300	0
8EF5	Trip Bus 1 Latching	0 to 1	---	1	F102	0 (Disabled)
8EF6	Trip Bus 1 Reset	0 to 4294967295	---	1	F300	0
8EF8	Trip Bus 1 Target	0 to 2	---	1	F109	0 (Self-reset)
8EF9	Trip Bus 1 Events	0 to 1	---	1	F102	0 (Disabled)
8EFA	Reserved (8 items)	0 to 1	---	1	F001	0
8F02	...Repeated for Trip Bus 2					
8F34	...Repeated for Trip Bus 3					
8F66	...Repeated for Trip Bus 4					
8F98	...Repeated for Trip Bus 5					
8FCA	...Repeated for Trip Bus 6					
FlexElement (Read/Write Setting) (16 modules)						
9000	FlexElement 1 Function	0 to 1	---	1	F102	0 (Disabled)
9001	FlexElement 1 Name	---	---	---	F206	“FxE 1”
9004	FlexElement 1 InputP	0 to 65535	---	1	F600	0
9005	FlexElement 1 InputM	0 to 65535	---	1	F600	0
9006	FlexElement 1 Compare	0 to 1	---	1	F516	0 (LEVEL)
9007	FlexElement 1 Input	0 to 1	---	1	F515	0 (SIGNED)
9008	FlexElement 1 Direction	0 to 1	---	1	F517	0 (OVER)
9009	FlexElement 1 Hysteresis	0.1 to 50	%	0.1	F001	30
900A	FlexElement 1 Pickup	-90 to 90	pu	0.001	F004	1000
900C	FlexElement 1 DeltaT Units	0 to 2	---	1	F518	0 (Milliseconds)
900D	FlexElement 1 DeltaT	20 to 86400	---	1	F003	20
900F	FlexElement 1 Pickup Delay	0 to 65.535	s	0.001	F001	0
9010	FlexElement 1 Reset Delay	0 to 65.535	s	0.001	F001	0
9011	FlexElement 1 Block	0 to 4294967295	---	1	F300	0
9013	FlexElement 1 Target	0 to 2	---	1	F109	0 (Self-reset)
9014	FlexElement 1 Events	0 to 1	---	1	F102	0 (Disabled)
9015	...Repeated for FlexElement 2					
902A	...Repeated for FlexElement 3					
903F	...Repeated for FlexElement 4					
9054	...Repeated for FlexElement 5					
9069	...Repeated for FlexElement 6					
907E	...Repeated for FlexElement 7					
9093	...Repeated for FlexElement 8					
90A8	...Repeated for FlexElement 9					
90BD	...Repeated for FlexElement 10					
90D2	...Repeated for FlexElement 11					
90E7	...Repeated for FlexElement 12					
90FC	...Repeated for FlexElement 13					
9111	...Repeated for FlexElement 14					
9126	...Repeated for FlexElement 15					
913B	...Repeated for FlexElement 16					
DCmA Outputs (Read/Write Setting) (24 modules)						
9360	DCmA Output 1 Source	0 to 65535	---	1	F600	0
9361	DCmA Output 1 Range	0 to 2	---	1	F522	0 (–1 to 1 mA)
9362	DCmA Output 1 Minimum	–90 to 90	pu	0.001	F004	0
9364	DCmA Output 1 Maximum	–90 to 90	pu	0.001	F004	1000

Table B–10: MODBUS MEMORY MAP (Sheet 40 of 65)

ADDR	REGISTER NAME	RANGE	UNITS	STEP	FORMAT	DEFAULT
9366	...Repeated for DCmA Output 2					
936C	...Repeated for DCmA Output 3					
9372	...Repeated for DCmA Output 4					
9378	...Repeated for DCmA Output 5					
937E	...Repeated for DCmA Output 6					
9384	...Repeated for DCmA Output 7					
938A	...Repeated for DCmA Output 8					
9390	...Repeated for DCmA Output 9					
9396	...Repeated for DCmA Output 10					
939C	...Repeated for DCmA Output 11					
93A2	...Repeated for DCmA Output 12					
93A8	...Repeated for DCmA Output 13					
93AE	...Repeated for DCmA Output 14					
93B4	...Repeated for DCmA Output 15					
93BA	...Repeated for DCmA Output 16					
93C0	...Repeated for DCmA Output 17					
93C6	...Repeated for DCmA Output 18					
93CC	...Repeated for DCmA Output 19					
93D2	...Repeated for DCmA Output 20					
93D8	...Repeated for DCmA Output 21					
93DE	...Repeated for DCmA Output 22					
93E4	...Repeated for DCmA Output 23					
93EA	...Repeated for DCmA Output 24					
Direct Input/Output Names (Read/Write Setting) (32 modules)						
9400	Direct Input 1 Name	0 to 96	---	1	F205	“Dir Ip 1”
9406	Direct Output 1 Name	1 to 96	---	1	F205	“Dir Out 1”
940C	...Repeated for Direct Input/Output 2					
9418	...Repeated for Direct Input/Output 3					
9424	...Repeated for Direct Input/Output 4					
9430	...Repeated for Direct Input/Output 5					
943C	...Repeated for Direct Input/Output 6					
9448	...Repeated for Direct Input/Output 7					
9454	...Repeated for Direct Input/Output 8					
9460	...Repeated for Direct Input/Output 9					
946C	...Repeated for Direct Input/Output 10					
9478	...Repeated for Direct Input/Output 11					
9484	...Repeated for Direct Input/Output 12					
9490	...Repeated for Direct Input/Output 13					
949C	...Repeated for Direct Input/Output 14					
94A8	...Repeated for Direct Input/Output 15					
94B4	...Repeated for Direct Input/Output 16					
94C0	...Repeated for Direct Input/Output 17					
94CC	...Repeated for Direct Input/Output 18					
94D8	...Repeated for Direct Input/Output 19					
94E4	...Repeated for Direct Input/Output 20					
94F0	...Repeated for Direct Input/Output 21					
94FC	...Repeated for Direct Input/Output 22					
9508	...Repeated for Direct Input/Output 23					
9514	...Repeated for Direct Input/Output 24					
9520	...Repeated for Direct Input/Output 25					
952C	...Repeated for Direct Input/Output 26					
9538	...Repeated for Direct Input/Output 27					
9544	...Repeated for Direct Input/Output 28					
9550	...Repeated for Direct Input/Output 29					

Table B–10: MODBUS MEMORY MAP (Sheet 41 of 65)

ADDR	REGISTER NAME	RANGE	UNITS	STEP	FORMAT	DEFAULT
955C	...Repeated for Direct Input/Output 30					
9568	...Repeated for Direct Input/Output 31					
9574	...Repeated for Direct Input/Output 32					
IEC 61850 Received Integers (Read/Write Setting) (16 modules)						
98A0	IEC 61850 GOOSE uinteger 1 Default Value	0 to 429496295	---	1	F003	1000
98A2	IEC 61850 GOOSE uinteger Input 1 Mode	0 to 1	---	1	F491	0 (Default Value)
98A3	...Repeated for IEC61850 GOOSE uinteger 2					
98A6	...Repeated for IEC61850 GOOSE uinteger 3					
98A9	...Repeated for IEC61850 GOOSE uinteger 4					
98AC	...Repeated for IEC61850 GOOSE uinteger 5					
98AF	...Repeated for IEC61850 GOOSE uinteger 6					
98B2	...Repeated for IEC61850 GOOSE uinteger 7					
98B5	...Repeated for IEC61850 GOOSE uinteger 8					
98B8	...Repeated for IEC61850 GOOSE uinteger 9					
98BB	...Repeated for IEC61850 GOOSE uinteger 10					
98BE	...Repeated for IEC61850 GOOSE uinteger 11					
98C1	...Repeated for IEC61850 GOOSE uinteger 12					
98C4	...Repeated for IEC61850 GOOSE uinteger 13					
98C7	...Repeated for IEC61850 GOOSE uinteger 14					
98CA	...Repeated for IEC61850 GOOSE uinteger 15					
98CD	...Repeated for IEC61850 GOOSE uinteger 16					
FlexElement Actual Values (Read Only) (16 modules)						
9900	FlexElement 1 Actual	-2147483.647 to 2147483.647	---	0.001	F004	0
9902	FlexElement 2 Actual	-2147483.647 to 2147483.647	---	0.001	F004	0
9904	FlexElement 3 Actual	-2147483.647 to 2147483.647	---	0.001	F004	0
9906	FlexElement 4 Actual	-2147483.647 to 2147483.647	---	0.001	F004	0
9908	FlexElement 5 Actual	-2147483.647 to 2147483.647	---	0.001	F004	0
990A	FlexElement 6 Actual	-2147483.647 to 2147483.647	---	0.001	F004	0
990C	FlexElement 7 Actual	-2147483.647 to 2147483.647	---	0.001	F004	0
990E	FlexElement 8 Actual	-2147483.647 to 2147483.647	---	0.001	F004	0
9910	FlexElement 9 Actual	-2147483.647 to 2147483.647	---	0.001	F004	0
9912	FlexElement 10 Actual	-2147483.647 to 2147483.647	---	0.001	F004	0
9914	FlexElement 11 Actual	-2147483.647 to 2147483.647	---	0.001	F004	0
9916	FlexElement 12 Actual	-2147483.647 to 2147483.647	---	0.001	F004	0
9918	FlexElement 13 Actual	-2147483.647 to 2147483.647	---	0.001	F004	0
991A	FlexElement 14 Actual	-2147483.647 to 2147483.647	---	0.001	F004	0
991C	FlexElement 15 Actual	-2147483.647 to 2147483.647	---	0.001	F004	0
991E	FlexElement 16 Actual	-2147483.647 to 2147483.647	---	0.001	F004	0
Breaker Restrike (Read/Write Setting) (3 modules)						
9930	Breaker Restrike 1 Function	0 to 1	---	1	F102	0 (Disabled)
9931	Breaker Restrike 1 Block	0 to 4294967295	---	1	F300	0
9933	Breaker Restrike 1 Signal Source	0 to 5	---	1	F167	0 (SRC 1)
9934	Breaker Restrike 1 Pickup	0.1 to 2	pu	0.01	F001	50
9935	Breaker Restrike 1 Reset Delay	0 to 65.535	s	0.001	F001	100
9936	Breaker Restrike 1 HF Detect	0 to 1	---	1	F102	1 (Enabled)
9937	Breaker Restrike 1 Breaker Open	0 to 4294967295	---	1	F300	0
9939	Breaker Restrike 1 Open Command	0 to 4294967295	---	1	F300	0
993B	Breaker Restrike 1 Close Command	0 to 4294967295	---	1	F300	0
993D	Breaker Restrike 1 Target	0 to 2	---	1	F109	0 (Self-reset)
993E	Breaker Restrike 1 Events	0 to 1	---	1	F102	0 (Disabled)
993F	Reserved (2 items)	---	---	---	F002	0
9941	...Repeated for Breaker Restrike 2					
9952	...Repeated for Breaker Restrike 3					

Table B–10: MODBUS MEMORY MAP (Sheet 42 of 65)

ADDR	REGISTER NAME	RANGE	UNITS	STEP	FORMAT	DEFAULT
Capacitor Control Settings (Read/Write Setting) (4 modules)						
9B00	Capacitor Control 1 Function	0 to 1	---	1	F102	0 (Disabled)
9B01	Capacitor Control 1 Set Remote 1	0 to 4294967295	---	1	F300	0
9B03	Capacitor Control 1 Set Remote 2	0 to 4294967295	---	1	F300	0
9B05	Capacitor Control 1 Set Local 1	0 to 4294967295	---	1	F300	0
9B07	Capacitor Control 1 Set Local 2	0 to 4294967295	---	1	F300	0
9B09	Capacitor Control 1 Remote Control Enable	0 to 4294967295	---	1	F300	0
9B0B	Capacitor Control 1 Local Control Enable	0 to 4294967295	---	1	F300	0
9B0D	Capacitor Control 1 Remote Set Automatic	0 to 4294967295	---	1	F300	0
9B0F	Capacitor Control 1 Local Set Automatic	0 to 4294967295	---	1	F300	0
9B11	Capacitor Control 1 Remote Set Manual	0 to 4294967295	---	1	F300	0
9B13	Capacitor Control 1 Local Set Manual	0 to 4294967295	---	1	F300	0
9B15	Capacitor Control 1 Trip 1	0 to 4294967295	---	1	F300	0
9B17	Capacitor Control 1 Trip 2	0 to 4294967295	---	1	F300	0
9B19	Capacitor Control 1 Trip 3	0 to 4294967295	---	1	F300	0
9B1B	Capacitor Control 1 Trip 4	0 to 4294967295	---	1	F300	0
9B1D	Capacitor Control 1 Trip 5	0 to 4294967295	---	1	F300	0
9B1F	Capacitor Control 1 Trip 6	0 to 4294967295	---	1	F300	0
9B21	Capacitor Control 1 Switch to Manual on Trip	0 to 1	---	1	F126	1 (Yes)
9B22	Capacitor Control 1 Automatic Control Enable	0 to 4294967295	---	1	F300	0
9B24	Capacitor Control 1 Manual Control Enable	0 to 4294967295	---	1	F300	0
9B26	Capacitor Control 1 Remote Open	0 to 4294967295	---	1	F300	0
9B28	Capacitor Control 1 Local Open	0 to 4294967295	---	1	F300	0
9B2A	Capacitor Control 1 Automatic Open	0 to 4294967295	---	1	F300	0
9B2C	Capacitor Control 1 Breaker Open 52b	0 to 4294967295	---	1	F300	0
9B2E	Capacitor Control 1 Trip Seal-in Delay	0 to 60	s	0.001	F001	400
9B2F	Capacitor Control 1 Remote Close	0 to 4294967295	---	1	F300	0
9B31	Capacitor Control 1 Local Close	0 to 4294967295	---	1	F300	0
9B33	Capacitor Control 1 Automatic Close	0 to 4294967295	---	1	F300	0
9B35	Capacitor Control 1 Breaker Closed 52a	0 to 4294967295	---	1	F300	0
9B37	Capacitor Control 1 Close Discharge Time	0 to 3600	s	1	F001	300
9B39	Capacitor Control 1 Close Seal-in Delay	0 to 60	s	0.001	F001	400
9B3A	Capacitor Control 1 Breaker Close Block	0 to 4294967295	---	1	F300	0
9B3C	Capacitor Control Close Override	0 to 4294967295	---	1	F300	0
9B3E	Capacitor Control 1 Targets	0 to 2	---	1	F109	0 (Self-Reset)
9B3F	Capacitor Control 1 Events	0 to 1	---	1	F102	0 (Disabled)
9B40	...Repeated for Capacitor Control Element 2					
9B80	...Repeated for Capacitor Control Element 3					
9BC0	...Repeated for Capacitor Control Element 4					
Automatic Voltage Regulator Settings (Read/Write Setting) (3 modules)						
9C90	Automatic Voltage Regulator 1 Function	0 to 1	---	1	F102	0 (Disabled)
9C91	Automatic Voltage Regulator 1 Source	0 to 5	---	1	F167	0 (SRC 1)
9C92	Automatic Voltage Regulator 1 Minimum Voltage	0.5 to 1.5	pu	0.001	F001	500
9C93	Automatic Voltage Regulator 1 Control Mode	0 to 1	---	1	F536	0 (Voltage)
9C94	Automatic Voltage Regulator 1 Voltage Operating Signal	0 to 8	---	1	F535	4 (V1)
9C95	Automatic Voltage Regulator 1 Voltage Level to Close	0.75 to 1.5	pu	0.001	F001	950
9C96	Automatic Voltage Regulator 1 Voltage Level to Open	0.75 to 1.5	pu	0.001	F001	1050
9C97	AVR 1 Voltage Drop Compensation Impedance	0 to 250	ohms	0.01	F001	0
9C98	AVR 1 Voltage Drop Compensation RCA	30 to 90	°	1	F001	75
9C99	Automatic Voltage Regulator 1 var Level to Close	–1.5 to 1.5	pu	0.001	F002	950
9C9A	Automatic Voltage Regulator 1 var Level to Open	–1.5 to 1.5	pu	0.001	F002	1050
9C9B	Automatic Voltage Regulator 1 Power Factor Limit	0.5 to 1	---	0.01	F001	100
9C9C	Automatic Voltage Regulator 1 var Open Mode	0 to 1	---	1	F537	1 (Minimize no. of ops.)

Table B–10: MODBUS MEMORY MAP (Sheet 43 of 65)

ADDR	REGISTER NAME	RANGE	UNITS	STEP	FORMAT	DEFAULT
9C9D	Automatic Voltage Regulator 1 Delay Before Close	0 to 65.535	s	0.001	F001	1000
9C9E	Automatic Voltage Regulator 1 Delay Before Open	0 to 65.535	s	0.001	F001	1000
9C9F	Automatic Voltage Regulator 1 Block	0 to 4294967295	---	1	F300	0
9CA1	Automatic Voltage Regulator 1 Events	0 to 1	---	1	F102	0 (Disabled)
9CA2	Automatic Voltage Regulator 1 Target	0 to 2	---	1	F109	0 (Self-Reset)
9CA3	Reserved	0 to 0.001	---	0.001	F001	0
9CA4	...Repeated for Automatic Voltage Regulator 2					
9CB8	...Repeated for Automatic Voltage Regulator 3					
Neutral Current Unbalance Settings (Read/Write Grouped Setting) (3 modules)						
9CE0	Neutral Current Unbalance 1 Function	0 to 1	---	1	F102	0 (Disabled)
9CE1	Neutral Current Unbalance 1 Bank Source	0 to 5	---	1	F167	0 (SRC 1)
9CE2	Neutral Current Unbalance 1 *k* Magnitude	0 to 0.15	---	0.0001	F001	0
9CE3	Neutral Current Unbalance 1 *k* Angle	0 to 359	°	1	F001	0
9CE4	Neutral Current Unbalance 1 Stage 1 Pickup	0 to 5	pu	0.001	F001	20
9CE5	Neutral Current Unbalance 1 Stage 1 Slope	0 to 10	%	0.1	F001	20
9CE6	Neutral Current Unbalance 1 Stage 2 Pickup	0 to 5	pu	0.001	F001	30
9CE7	Neutral Current Unbalance 1 Stage 2 Slope	0 to 10	%	0.1	F001	20
9CE8	Neutral Current Unbalance 1 Stage 3 Pickup	0 to 5	pu	0.001	F001	40
9CE9	Neutral Current Unbalance 1 Stage 3 Slope	0 to 10	%	0.1	F001	20
9CEA	Neutral Current Unbalance 1 Stage 4 Pickup	0 to 5	pu	0.001	F001	50
9CEB	Neutral Current Unbalance 1 Stage 4 Slope	0 to 10	%	0.1	F001	50
9CEC	Neutral Current Unbalance 1 Stage 1 Pickup Delay	0 to 600	s	0.01	F001	3000
9CED	Neutral Current Unbalance 1 Stage 2 Pickup Delay	0 to 600	s	0.01	F001	1000
9CEE	Neutral Current Unbalance 1 Stage 3 Pickup Delay	0 to 600	s	0.01	F001	100
9CEF	Neutral Current Unbalance 1 Stage 4 Pickup Delay	0 to 600	s	0.01	F001	20
9CF0	Neutral Current Unbalance 1 Dropout Delay	0 to 600	s	0.01	F001	25
9CF1	Neutral Current Unbalance 1 Stage 1 Block	0 to 4294967295	---	1	F300	0
9CF3	Neutral Current Unbalance 1 Stage 2 Block	0 to 4294967295	---	1	F300	0
9CF5	Neutral Current Unbalance 1 Stage 3 Block	0 to 4294967295	---	1	F300	0
9CF7	Neutral Current Unbalance 1 Stage 4 Block	0 to 4294967295	---	1	F300	0
9CF9	Neutral Current Unbalance 1 Target	0 to 2	---	1	F109	0 (Self-Reset)
9CFA	Neutral Current Unbalance 1 Events	0 to 1	---	1	F102	0 (Disabled)
9CFB	...Repeated for Neutral Current Unbalance 2					
9D16	...Repeated for Neutral Current Unbalance 3					
Neutral Voltage Unbalance Settings (Read/Write Grouped Setting) (3 modules)						
9D50	Neutral Voltage Unbalance 1 Function	0 to 1	---	1	F102	0 (Disabled)
9D51	Neutral Voltage Unbalance 1 Neutral-point Source	0 to 5	---	1	F167	0 (SRC 1)
9D52	Neutral Voltage Unbalance 1 Bus Source	0 to 5	---	1	F167	0 (SRC 1)
9D53	Neutral Voltage Unbalance 1 Bus 3V0	0 to 1	---	1	F241	0 (Calculated)
9D54	Neutral Voltage Unbalance 1 Ground	0 to 1	---	1	F255	0 (VT (ungrnd))
9D55	Neutral Voltage Unbalance 1 AB Ratio	0.75 to 1.25	---	0.0001	F001	10000
9D56	Neutral Voltage Unbalance 1 AC Ratio	0.75 to 1.25	---	0.0001	F001	10000
9D57	Neutral Voltage Unbalance 1 Stage 1 Pickup	0.001 to 1	pu	0.001	F001	10
9D58	Neutral Voltage Unbalance 1 Stage 1 Slope	0 to 10	%	0.1	F001	0
9D59	Neutral Voltage Unbalance 1 Stage 2 Pickup	0.001 to 1	pu	0.001	F001	20
9D5A	Neutral Voltage Unbalance 1 Stage 2 Slope	0 to 10	%	0.1	F001	0
9D5B	Neutral Voltage Unbalance 1 Stage 3 Pickup	0.001 to 1	pu	0.001	F001	20
9D5C	Neutral Voltage Unbalance 1 Stage 3 Slope	0 to 10	%	0.1	F001	50
9D5D	Neutral Voltage Unbalance 1 Stage 4 Pickup	0.001 to 1	pu	0.001	F001	30
9D5E	Neutral Voltage Unbalance 1 Stage 4 Slope	0 to 10	%	0.1	F001	50
9D5F	Neutral Voltage Unbalance 1 Stage 1 Pickup Delay	0 to 600	s	0.01	F001	3000
9D60	Neutral Voltage Unbalance 1 Stage 2 Pickup Delay	0 to 600	s	0.01	F001	1000
9D61	Neutral Voltage Unbalance 1 Stage 3 Pickup Delay	0 to 600	s	0.01	F001	100
9D62	Neutral Voltage Unbalance 1 Stage 4 Pickup Delay	0 to 600	s	0.01	F001	20

Table B–10: MODBUS MEMORY MAP (Sheet 44 of 65)

ADDR	REGISTER NAME	RANGE	UNITS	STEP	FORMAT	DEFAULT
9D63	Neutral Voltage Unbalance 1 Dropout Delay	0 to 600	s	0.01	F001	25
9D64	Neutral Voltage Unbalance 1 Stage 1 Block	0 to 4294967295	---	1	F300	0
9D66	Neutral Voltage Unbalance 1 Stage 2 Block	0 to 4294967295	---	1	F300	0
9D68	Neutral Voltage Unbalance 1 Stage 3 Block	0 to 4294967295	---	1	F300	0
9D6A	Neutral Voltage Unbalance 1 Stage 4 Block	0 to 4294967295	---	1	F300	0
9D6C	Neutral Voltage Unbalance 1 Target	0 to 2	---	1	F109	0 (Self-Reset)
9D6D	Neutral Voltage Unbalance 1 Events	0 to 1	---	1	F102	0 (Disabled)
9D6E	...Repeated for Neutral Voltage Unbalance 2					
9D8C	...Repeated for Neutral Voltage Unbalance 3					
Phase Current Unbalance Settings (Read/Write Grouped Setting) (3 modules)						
9DC0	Phase Current Unbalance 1 Function	0 to 1	---	1	F102	0 (Disabled)
9DC1	Phase Current Unbalance 1 Differential Source	0 to 5	---	1	F167	0 (SRC 1)
9DC2	Phase Current Unbalance 1 Bank Source	0 to 5	---	1	F167	0 (SRC 1)
9DC3	Phase Current Unbalance 1 Inherent Factor A	–0.1 to 0.1	---	0.0001	F002	0
9DC4	Phase Current Unbalance 1 Inherent Factor B	–0.1 to 0.1	---	0.0001	F002	0
9DC5	Phase Current Unbalance 1 Inherent Factor C	–0.1 to 0.1	---	0.0001	F002	0
9DC6	Phase Current Unbalance 1 Stage 1A Pickup	0.001 to 5	pu	0.001	F001	20
9DC7	Phase Current Unbalance 1 Stage 2A Pickup	0.001 to 5	pu	0.001	F001	30
9DC8	Phase Current Unbalance 1 Stage 3A Pickup	0.001 to 5	pu	0.001	F001	40
9DC9	Phase Current Unbalance 1 Stage 4A Pickup	0.001 to 5	pu	0.001	F001	50
9DCA	Phase Current Unbalance 1 Stage 1B Pickup	0.001 to 5	pu	0.001	F001	20
9DCB	Phase Current Unbalance 1 Stage 2B Pickup	0.001 to 5	pu	0.001	F001	30
9DCC	Phase Current Unbalance 1 Stage 3B Pickup	0.001 to 5	pu	0.001	F001	40
9DCD	Phase Current Unbalance 1 Stage 4B Pickup	0.001 to 5	pu	0.001	F001	50
9DCE	Phase Current Unbalance 1 Stage 1C Pickup	0.001 to 5	pu	0.001	F001	20
9DCF	Phase Current Unbalance 1 Stage 2C Pickup	0.001 to 5	pu	0.001	F001	30
9DD0	Phase Current Unbalance 1 Stage 3C Pickup	0.001 to 5	pu	0.001	F001	40
9DD1	Phase Current Unbalance 1 Stage 4C Pickup	0.001 to 5	pu	0.001	F001	50
9DD2	Phase Current Unbalance 1 Stage 1 Pickup Delay	0 to 600	s	0.01	F001	3000
9DD3	Phase Current Unbalance 1 Stage 2 Pickup Delay	0 to 600	s	0.01	F001	1000
9DD4	Phase Current Unbalance 1 Stage 3 Pickup Delay	0 to 600	s	0.01	F001	100
9DD5	Phase Current Unbalance 1 Stage 4 Pickup Delay	0 to 600	s	0.01	F001	20
9DD6	Phase Current Unbalance 1 Dropout Delay	0 to 600	s	0.01	F001	25
9DD7	Phase Current Unbalance 1 Stage 1 Block	0 to 4294967295	---	1	F300	0
9DD9	Phase Current Unbalance 1 Stage 2 Block	0 to 4294967295	---	1	F300	0
9DDB	Phase Current Unbalance 1 Stage 3 Block	0 to 4294967295	---	1	F300	0
9DDD	Phase Current Unbalance 1 Stage 4 Block	0 to 4294967295	---	1	F300	0
9DDF	Phase Current Unbalance 1 Target	0 to 2	---	1	F109	0 (Self-Reset)
9DE0	Phase Current Unbalance 1 Events	0 to 1	---	1	F102	0 (Disabled)
9DE1	...Repeated for Phase Current Unbalance 2					
9E02	...Repeated for Phase Current Unbalance 3					
Voltage Differential Settings (Read/Write Grouped Setting) (3 modules)						
9E40	Voltage Differential 1 Function	0 to 1	---	1	F102	0 (Disabled)
9E41	Voltage Differential 1 Bus Source	0 to 5	---	1	F167	0 (SRC 1)
9E42	Voltage Differential 1 Tap Source	0 to 5	---	1	F167	0 (SRC 1)
9E43	Voltage Differential 1 Bank Ground	0 to 1	---	1	F091	0 (Grounded)
9E44	Voltage Differential 1 Match Factor A	0.5 to 2000	---	0.0001	F003	20000
9E46	Voltage Differential 1 Match Factor B	0.5 to 2000	---	0.0001	F003	20000
9E48	Voltage Differential 1 Match Factor C	0.5 to 2000	---	0.0001	F003	20000
9E4A	Voltage Differential 1 Stage 1A Pickup	0.001 to 1	pu	0.001	F001	10
9E4B	Voltage Differential 1 Stage 2A Pickup	0.001 to 1	pu	0.001	F001	20
9E4C	Voltage Differential 1 Stage 3A Pickup	0.001 to 1	pu	0.001	F001	30
9E4D	Voltage Differential 1 Stage 4A Pickup	0.001 to 1	pu	0.001	F001	40
9E4E	Voltage Differential 1 Stage 1B Pickup	0.001 to 1	pu	0.001	F001	10

Table B–10: MODBUS MEMORY MAP (Sheet 45 of 65)

ADDR	REGISTER NAME	RANGE	UNITS	STEP	FORMAT	DEFAULT
9E4F	Voltage Differential 1 Stage 2B Pickup	0.001 to 1	pu	0.001	F001	20
9E50	Voltage Differential 1 Stage 3B Pickup	0.001 to 1	pu	0.001	F001	30
9E51	Voltage Differential 1 Stage 4B Pickup	0.001 to 1	pu	0.001	F001	40
9E52	Voltage Differential 1 Stage 1C Pickup	0.001 to 1	pu	0.001	F001	10
9E53	Voltage Differential 1 Stage 2C Pickup	0.001 to 1	pu	0.001	F001	20
9E54	Voltage Differential 1 Stage 3C Pickup	0.001 to 1	pu	0.001	F001	30
9E55	Voltage Differential 1 Stage 4C Pickup	0.001 to 1	pu	0.001	F001	40
9E56	Voltage Differential 1 Stage 1 Pickup Delay	0 to 600	s	0.01	F001	3000
9E57	Voltage Differential 1 Stage 2 Pickup Delay	0 to 600	s	0.01	F001	1000
9E58	Voltage Differential 1 Stage 3 Pickup Delay	0 to 600	s	0.01	F001	100
9E59	Voltage Differential 1 Stage 4 Pickup Delay	0 to 600	s	0.01	F001	20
9E5A	Voltage Differential 1 Dropout Delay	0 to 600	s	0.01	F001	25
9E5B	Voltage Differential 1 Stage 1 Block	0 to 4294967295	---	1	F300	0
9E5D	Voltage Differential 1 Stage 2 Block	0 to 4294967295	---	1	F300	0
9E5F	Voltage Differential 1 Stage 3 Block	0 to 4294967295	---	1	F300	0
9E61	Voltage Differential 1 Stage 4 Block	0 to 4294967295	---	1	F300	0
9E63	Voltage Differential 1 Target	0 to 2	---	1	F109	0 (Self-Reset)
9E64	Voltage Differential 1 Events	0 to 1	---	1	F102	0 (Disabled)
9E65	...Repeated for Voltage Differential 2					
9E8A	...Repeated for Voltage Differential 3					
VT Fuse Failure (Read/Write Setting) (6 modules)						
A09A	VT Fuse Failure1 Function	0 to 1	---	1	F102	0 (Disabled)
A09B	VT Fuse Failure Neutral Wire Open1 Function	0 to 1	---	1	F102	0 (Disabled)
A09C	VT Fuse Failure Neutral Wire Open 1 3rd Harmonic Pickup	0 to 3	pu	0.001	F001	100
A09D	...Repeated for module number 2					
A0A0	...Repeated for module number 3					
A0A3	...Repeated for module number 4					
A0A6	...Repeated for module number 5					
A0A9	...Repeated for module number 6					
VT Fuse Failure Actuals (Read Only) (6 modules)						
A0AC	VT Fuse Failure 1 V0 3rd Harmonic	0 to 999999.999	V	0.001	F060	0
A0AE	...Repeated for module number 2					
A0B0	...Repeated for module number 3					
A0B2	...Repeated for module number 4					
A0B4	...Repeated for module number 5					
A0B6	...Repeated for module number 6					
Selector Switch Actual Values (Read Only)						
A210	Selector Switch 1 Position	1 to 7	---	1	F001	0
A211	Selector Switch 2 Position	1 to 7	---	1	F001	1
Selector Switch Settings (Read/Write) (2 modules)						
A280	Selector 1 Function	0 to 1	---	1	F102	0 (Disabled)
A281	Selector 1 Range	1 to 7	---	1	F001	7
A282	Selector 1 Timeout	3 to 60	s	0.1	F001	50
A283	Selector 1 Step Up	0 to 4294967295	---	1	F300	0
A285	Selector 1 Step Mode	0 to 1	---	1	F083	0 (Time-out)
A286	Selector 1 Acknowledge	0 to 4294967295	---	1	F300	0
A288	Selector 1 Bit0	0 to 4294967295	---	1	F300	0
A28A	Selector 1 Bit1	0 to 4294967295	---	1	F300	0
A28C	Selector 1 Bit2	0 to 4294967295	---	1	F300	0
A28E	Selector 1 Bit Mode	0 to 1	---	1	F083	0 (Time-out)
A28F	Selector 1 Bit Acknowledge	0 to 4294967295	---	1	F300	0
A291	Selector 1 Power Up Mode	0 to 2	---	1	F084	0 (Restore)
A292	Selector 1 Target	0 to 2	---	1	F109	0 (Self-reset)
A293	Selector 1 Events	0 to 1	---	1	F102	0 (Disabled)

Table B–10: MODBUS MEMORY MAP (Sheet 46 of 65)

ADDR	REGISTER NAME	RANGE	UNITS	STEP	FORMAT	DEFAULT
A294	Reserved (10 items)	---	---	1	F001	0
A29E	...Repeated for Selector 2					
Digital Counter (Read/Write Setting) (8 modules)						
A300	Digital Counter 1 Function	0 to 1	---	1	F102	0 (Disabled)
A301	Digital Counter 1 Name	---	---	---	F205	“Counter 1"
A307	Digital Counter 1 Units	---	---	---	F206	(none)
A30A	Digital Counter 1 Block	0 to 4294967295	---	1	F300	0
A30C	Digital Counter 1 Up	0 to 4294967295	---	1	F300	0
A30E	Digital Counter 1 Down	0 to 4294967295	---	1	F300	0
A311	Digital Counter 1 Preset	–2147483647 to 2147483647	---	1	F004	0
A313	Digital Counter 1 Compare	–2147483647 to 2147483647	---	1	F004	0
A315	Digital Counter 1 Reset	0 to 4294967295	---	1	F300	0
A317	Digital Counter 1 Freeze/Reset	0 to 4294967295	---	1	F300	0
A319	Digital Counter 1 Freeze/Count	0 to 4294967295	---	1	F300	0
A31B	Digital Counter 1 Set To Preset	0 to 4294967295	---	1	F300	0
A31D	Reserved (11 items)	---	---	---	F001	0
A328	...Repeated for Digital Counter 2					
A350	...Repeated for Digital Counter 3					
A378	...Repeated for Digital Counter 4					
A3A0	...Repeated for Digital Counter 5					
A3C8	...Repeated for Digital Counter 6					
A3F0	...Repeated for Digital Counter 7					
A418	...Repeated for Digital Counter 8					
FlexCurves C and D (Read/Write Setting)						
A600	FlexCurve C (120 items)	0 to 65535	ms	1	F011	0
A680	FlexCurve D (120 items)	0 to 65535	ms	1	F011	0
Non Volatile Latches (Read/Write Setting) (16 modules)						
A700	Non-Volatile Latch 1 Function	0 to 1	---	1	F102	0 (Disabled)
A701	Non-Volatile Latch 1 Type	0 to 1	---	1	F519	0 (Reset Dominant)
A702	Non-Volatile Latch 1 Set	0 to 4294967295	---	1	F300	0
A704	Non-Volatile Latch 1 Reset	0 to 4294967295	---	1	F300	0
A706	Non-Volatile Latch 1 Target	0 to 2	---	1	F109	0 (Self-reset)
A707	Non-Volatile Latch 1 Events	0 to 1	---	1	F102	0 (Disabled)
A708	Reserved (4 items)	---	---	---	F001	0
A70C	...Repeated for Non-Volatile Latch 2					
A718	...Repeated for Non-Volatile Latch 3					
A724	...Repeated for Non-Volatile Latch 4					
A730	...Repeated for Non-Volatile Latch 5					
A73C	...Repeated for Non-Volatile Latch 6					
A748	...Repeated for Non-Volatile Latch 7					
A754	...Repeated for Non-Volatile Latch 8					
A760	...Repeated for Non-Volatile Latch 9					
A76C	...Repeated for Non-Volatile Latch 10					
A778	...Repeated for Non-Volatile Latch 11					
A784	...Repeated for Non-Volatile Latch 12					
A790	...Repeated for Non-Volatile Latch 13					
A79C	...Repeated for Non-Volatile Latch 14					
A7A8	...Repeated for Non-Volatile Latch 15					
A7B4	...Repeated for Non-Volatile Latch 16					
IEC 61850 Received Analog Settings (Read/Write Setting) (32 modules)						
AA00	IEC 61850 GOOSE Analog 1 Default Value	–1000000 to 1000000	---	0.001	F060	1000
AA02	IEC 61850 GOOSE Analog Input 1 Mode	0 to 1	---	1	F491	0 (Default Value)

Table B–10: MODBUS MEMORY MAP (Sheet 47 of 65)

ADDR	REGISTER NAME	RANGE	UNITS	STEP	FORMAT	DEFAULT
AA03	IEC 61850 GOOSE Analog Input 1 Units	---	---	---	F207	(none)
AA05	IEC 61850 GOOSE Analog Input 1 Per-Unit Base	0 to 999999999.999	---	0.001	F060	1
AA07	...Repeated for IEC 61850 GOOSE Analog Input 2					
AA0E	...Repeated for IEC 61850 GOOSE Analog Input 3					
AA15	...Repeated for IEC 61850 GOOSE Analog Input 4					
AA1C	...Repeated for IEC 61850 GOOSE Analog Input 5					
AA23	...Repeated for IEC 61850 GOOSE Analog Input 6					
AA2A	...Repeated for IEC 61850 GOOSE Analog Input 7					
AA31	...Repeated for IEC 61850 GOOSE Analog Input 8					
AA38	...Repeated for IEC 61850 GOOSE Analog Input 9					
AA3F	...Repeated for IEC 61850 GOOSE Analog Input 10					
AA46	...Repeated for IEC 61850 GOOSE Analog Input 11					
AA4D	...Repeated for IEC 61850 GOOSE Analog Input 12					
AA54	...Repeated for IEC 61850 GOOSE Analog Input 13					
AA5B	...Repeated for IEC 61850 GOOSE Analog Input 14					
AA62	...Repeated for IEC 61850 GOOSE Analog Input 15					
AA69	...Repeated for IEC 61850 GOOSE Analog Input 16					
AA70	...Repeated for IEC 61850 GOOSE Analog Input 17					
AA77	...Repeated for IEC 61850 GOOSE Analog Input 18					
AA7E	...Repeated for IEC 61850 GOOSE Analog Input 19					
AA85	...Repeated for IEC 61850 GOOSE Analog Input 20					
AA8C	...Repeated for IEC 61850 GOOSE Analog Input 21					
AA93	...Repeated for IEC 61850 GOOSE Analog Input 22					
AA9A	...Repeated for IEC 61850 GOOSE Analog Input 23					
AAA1	...Repeated for IEC 61850 GOOSE Analog Input 24					
AAA8	...Repeated for IEC 61850 GOOSE Analog Input 25					
AAAF	...Repeated for IEC 61850 GOOSE Analog Input 26					
AAB6	...Repeated for IEC 61850 GOOSE Analog Input 27					
AABD	...Repeated for IEC 61850 GOOSE Analog Input 28					
AAC4	...Repeated for IEC 61850 GOOSE Analog Input 29					
AACB	...Repeated for IEC 61850 GOOSE Analog Input 30					
AAD2	...Repeated for IEC 61850 GOOSE Analog Input 31					
AAD9	...Repeated for IEC 61850 GOOSE Analog Input 32					
IEC 61850 XCBR Configuration (Read/Write Settings and Commands) (6 modules)						
AB00	FlexLogic Operand for IEC 61850 XCBR1.ST.Loc status	0 to 4294967295	---	1	F300	0
AB02	Command to Clear XCBR1 OpCnt (Operation Counter	0 to 1	---	1	F126	0 (No)
AB03	FlexLogic Operand for IEC 61850 XCBR Check Sync Release	0 to 4294967295	---	1	F300	0
AB05	FlexLogic Operand for IEC 61850 XCBR Open Interlock	0 to 4294967295	---	1	F300	0
AB07	FlexLogic Operand for IEC 61850 XCBR Close Interlock	0 to 4294967295	---	1	F300	0
AB09	FlexLogic Operand for IEC 61850 XCBR Pos ct1Model	0 to 4	---	1	F001	2
AB0A	FlexLogic Operand for IEC 61850 XCBR Pos sboTimeout	2 to 60	s	1	F001	30
AB0B	...Repeated for Module 2					
AB16	...Repeated for Module 3					
AB21	...Repeated for Module 4					
AB2C	...Repeated for Module 5					
AB37	...Repeated for Module 6					
IEC 61850 LN Name Prefixes (Read/Write Settings)						
AB48	IEC 61850 Logical Node LPHD1 Name Prefix	0 to 65534	---	1	F206	(none)
AB4B	IEC 61850 Logical Node PIOCx Name Prefix (72 items)	0 to 65534	---	1	F206	(none)
AC23	IEC 61850 Logical Node PTOCx Name Prefix (24 items)	0 to 65534	---	1	F206	(none)
AC6B	IEC 61850 Logical Node PTUVx Name Prefix (13 items)	0 to 65534	---	1	F206	(none)
AC92	IEC 61850 Logical Node PTOVx Name Prefix (10 items)	0 to 65534	---	1	F206	(none)
ACB6	IEC 61850 Logical Node PDISx Name Prefix (10 items)	0 to 65534	---	1	F206	(none)

Table B–10: MODBUS MEMORY MAP (Sheet 48 of 65)

ADDR	REGISTER NAME	RANGE	UNITS	STEP	FORMAT	DEFAULT
ACD4	IEC 61850 Logical Node RBRFx Name Prefix (24 items)	0 to 65534	---	1	F206	(none)
AD1C	IEC 61850 Logical Node RPSBx Name Prefix	0 to 65534	---	1	F206	(none)
AD1F	IEC 61850 Logical Node RRECx Name Prefix (6 items)	0 to 65534	---	1	F206	(none)
AD31	IEC 61850 Logical Node MMXUx Name Prefix (6 items)	0 to 65534	---	1	F206	(none)
AD43	IEC 61850 Logical Node GGIOx Name Prefix (5 items)	0 to 65534	---	1	F206	(none)
AD52	IEC 61850 Logical Node RFLOx Name Prefix (5 items)	0 to 65534	---	1	F206	(none)
AD61	IEC 61850 Logical Node XCBRx Name Prefix (6 items)	0 to 65534	---	1	F206	(none)
AD73	IEC 61850 Logical Node PTRCx Name Prefix (6 items)	0 to 65534	---	1	F206	(none)
AD85	IEC 61850 Logical Node PDIFx Name Prefix (4 items)	0 to 65534	---	1	F206	(none)
AD91	IEC 61850 Logical Node MMXNx Name Prefix (37 items)	0 to 65534	---	1	F206	(none)
AE00	IEC 61850 Logical Node CSWIx Name Prefix (30 items)	0 to 65534	---	1	F206	(none)
AE5A	IEC 61850 Logical Node XSWIx Name Prefix (24 items)	0 to 65534	---	1	F206	(none)
IEC 61850 GGIO4 General Analog Configuration Settings (Read/Write)						
AF00	Number of Analog Input Points in GGIO4	4 to 32	---	4	F001	4
IEC 61850 GGIO4 Analog Input Points Configuration Settings (Read/Write Setting) (32 modules)						
AF10	IEC 61850 GGIO4 Analog Input 1 Value	---	---	---	F600	0
AF11	IEC 61850 GGIO4 Analog Input 1 Deadband	0.001 to 100	%	0.001	F003	100000
AF13	IEC 61850 GGIO4 Analog Input 1 Minimum	–1000000000000 to 1000000000000	---	0.001	F060	0
AF15	IEC 61850 GGIO4 Analog Input 1 Maximum	–1000000000000 to 1000000000000	---	0.001	F060	1000000
AF17	...Repeated for IEC 61850 GGIO4 Analog Input 2					
AF1E	...Repeated for IEC 61850 GGIO4 Analog Input 3					
AF25	...Repeated for IEC 61850 GGIO4 Analog Input 4					
AF2C	...Repeated for IEC 61850 GGIO4 Analog Input 5					
AF33	...Repeated for IEC 61850 GGIO4 Analog Input 6					
AF3A	...Repeated for IEC 61850 GGIO4 Analog Input 7					
AF41	...Repeated for IEC 61850 GGIO4 Analog Input 8					
AF48	...Repeated for IEC 61850 GGIO4 Analog Input 9					
AF4F	...Repeated for IEC 61850 GGIO4 Analog Input 10					
AF56	...Repeated for IEC 61850 GGIO4 Analog Input 11					
AF5D	...Repeated for IEC 61850 GGIO4 Analog Input 12					
AF64	...Repeated for IEC 61850 GGIO4 Analog Input 13					
AF6B	...Repeated for IEC 61850 GGIO4 Analog Input 14					
AF72	...Repeated for IEC 61850 GGIO4 Analog Input 15					
AF79	...Repeated for IEC 61850 GGIO4 Analog Input 16					
AF80	...Repeated for IEC 61850 GGIO4 Analog Input 17					
AF87	...Repeated for IEC 61850 GGIO4 Analog Input 18					
AF8E	...Repeated for IEC 61850 GGIO4 Analog Input 19					
AF95	...Repeated for IEC 61850 GGIO4 Analog Input 20					
AF9C	...Repeated for IEC 61850 GGIO4 Analog Input 21					
AFA3	...Repeated for IEC 61850 GGIO4 Analog Input 22					
AFAA	...Repeated for IEC 61850 GGIO4 Analog Input 23					
AFB1	...Repeated for IEC 61850 GGIO4 Analog Input 24					
AFB8	...Repeated for IEC 61850 GGIO4 Analog Input 25					
AFBF	...Repeated for IEC 61850 GGIO4 Analog Input 26					
AFC6	...Repeated for IEC 61850 GGIO4 Analog Input 27					
AFCD	...Repeated for IEC 61850 GGIO4 Analog Input 28					
AFD4	...Repeated for IEC 61850 GGIO4 Analog Input 29					
AFDB	...Repeated for IEC 61850 GGIO4 Analog Input 30					
AFE2	...Repeated for IEC 61850 GGIO4 Analog Input 31					
AFE9	...Repeated for IEC 61850 GGIO4 Analog Input 32					
IEC 61850 GOOSE/GSSE Configuration (Read/Write Setting)						
B01C	Default GOOSE/GSSE Update Time	1 to 60	s	1	F001	60
B01D	IEC 61850 GSSE Function (GsEna)	0 to 1	---	1	F102	1 (Enabled)

Table B–10: MODBUS MEMORY MAP (Sheet 49 of 65)

ADDR	REGISTER NAME	RANGE	UNITS	STEP	FORMAT	DEFAULT
B01E	IEC 61850 GSSE ID	---	---	---	F209	“GSSEOut”
B03F	IEC 61850 GOOSE Function (GoEna)	0 to 1	---	1	F102	0 (Disabled)
B040	IEC 61850 GSSE Destination MAC Address	---	---	---	F072	0
B043	IEC 61850 Standard GOOSE ID	---	---	---	F209	“GOOSEOut”
B064	IEC 61850 Standard GOOSE Destination MAC Address	---	---	---	F072	0
B067	IEC 61850 GOOSE VLAN Transmit Priority	0 to 7	---	1	F001	4
B068	IEC 61850 GOOSE VLAN ID	0 to 4095	---	1	F001	0
B069	IEC 61850 GOOSE ETYPE APPID	0 to 16383	---	1	F001	0
B06A	Reserved (2 items)	0 to 1	---	1	F001	0
IEC 61850 Server Configuration (Read/Write Settings/Commands)						
B06C	TCP Port Number for the IEC 61850 / MMS Protocol	0 to 65535	---	1	F001	102
B06D	IEC 61850 Logical Device Name	---	---	---	F213	“IEDName”
B07D	IEC 61850 Logical Device Instance	---	---	---	F213	“LDInst”
B08D	IEC 61850 LPHD Location	0 to 65534	---	1	F204	“Location”
B0B5	Include non-IEC 61850 Data	0 to 1	---	1	F102	0 (Disabled)
B0B6	IEC 61850 Server Data Scanning Function	0 to 1	---	1	F102	0 (Disabled)
B0B7	IEC 61850 LPHD Latitude	-90 to 90	degrees	0.001	F004	0
B0B9	IEC 61850 LPHD DC PhyNam Longitude	-180 to 180	degrees	0.001	F004	0
B9BB	IEC 61850 LPHD DC PhyNam Altitude	0 to 10000	m	1	F003	0
B0BD	Reserved (3 items)	0 to 1	---	1	F001	0
IEC 61850 MMXU Deadbands (Read/Write Setting) (6 modules)						
B0C0	IEC 61850 MMXU TotW Deadband 1	0.001 to 100	%	0.001	F003	10000
B0C2	IEC 61850 MMXU TotVAr Deadband 1	0.001 to 100	%	0.001	F003	10000
B0C4	IEC 61850 MMXU TotVA Deadband 1	0.001 to 100	%	0.001	F003	10000
B0C6	IEC 61850 MMXU TotPF Deadband 1	0.001 to 100	%	0.001	F003	10000
B0C8	IEC 61850 MMXU Hz Deadband 1	0.001 to 100	%	0.001	F003	10000
B0CA	IEC 61850 MMXU PPV.phsAB Deadband 1	0.001 to 100	%	0.001	F003	10000
B0CC	IEC 61850 MMXU PPV.phsBC Deadband 1	0.001 to 100	%	0.001	F003	10000
B0CE	IEC 61850 MMXU PPV.phsCA Deadband 1	0.001 to 100	%	0.001	F003	10000
B0D0	IEC 61850 MMXU PhV.phsA Deadband 1	0.001 to 100	%	0.001	F003	10000
B0D2	IEC 61850 MMXU PhV.phsB Deadband 1	0.001 to 100	%	0.001	F003	10000
B0D4	IEC 61850 MMXU PhV.phsC Deadband 1	0.001 to 100	%	0.001	F003	10000
B0D6	IEC 61850 MMXU A.phsA Deadband 1	0.001 to 100	%	0.001	F003	10000
B0D8	IEC 61850 MMXU A.phsB Deadband 1	0.001 to 100	%	0.001	F003	10000
B0DA	IEC 61850 MMXU A.phsC Deadband 1	0.001 to 100	%	0.001	F003	10000
B0DC	IEC 61850 MMXU A.neut Deadband 1	0.001 to 100	%	0.001	F003	10000
B0DE	IEC 61850 MMXU W.phsA Deadband 1	0.001 to 100	%	0.001	F003	10000
B0E0	IEC 61850 MMXU W.phsB Deadband 1	0.001 to 100	%	0.001	F003	10000
B0E2	IEC 61850 MMXU W.phsC Deadband 1	0.001 to 100	%	0.001	F003	10000
B0E4	IEC 61850 MMXU VAr.phsA Deadband 1	0.001 to 100	%	0.001	F003	10000
B0E6	IEC 61850 MMXU VAr.phsB Deadband 1	0.001 to 100	%	0.001	F003	10000
B0E8	IEC 61850 MMXU VAr.phsC Deadband 1	0.001 to 100	%	0.001	F003	10000
B0EA	IEC 61850 MMXU VA.phsA Deadband 1	0.001 to 100	%	0.001	F003	10000
B0EC	IEC 61850 MMXU VA.phsB Deadband 1	0.001 to 100	%	0.001	F003	10000
B0EE	IEC 61850 MMXU VA.phsC Deadband 1	0.001 to 100	%	0.001	F003	10000
B0F0	IEC 61850 MMXU PF.phsA Deadband 1	0.001 to 100	%	0.001	F003	10000
B0F2	IEC 61850 MMXU PF.phsB Deadband 1	0.001 to 100	%	0.001	F003	10000
B0F4	IEC 61850 MMXU PF.phsC Deadband 1	0.001 to 100	%	0.001	F003	10000
B0F6	...Repeated for Deadband 2					
B12C	...Repeated for Deadband 3					
B162	...Repeated for Deadband 4					
B198	...Repeated for Deadband 5					
B1CE	...Repeated for Deadband 6					

Table B–10: MODBUS MEMORY MAP (Sheet 50 of 65)

ADDR	REGISTER NAME	RANGE	UNITS	STEP	FORMAT	DEFAULT
IEC 61850 Received Analogs (Read Only) (32 modules)						
B210	IEC 61850 Received Analog 1	-1000000000000 to 1000000000000	---	0.001	F060	0
B212	...Repeated for Received Analog 2					
B214	...Repeated for Received Analog 3					
B216	...Repeated for Received Analog 4					
B218	...Repeated for Received Analog 5					
B21A	...Repeated for Received Analog 6					
B21C	...Repeated for Received Analog 7					
B21E	...Repeated for Received Analog 8					
B220	...Repeated for Received Analog 9					
B222	...Repeated for Received Analog 10					
B224	...Repeated for Received Analog 11					
B226	...Repeated for Received Analog 12					
B228	...Repeated for Received Analog 13					
B22A	...Repeated for Received Analog 14					
B22C	...Repeated for Received Analog 15					
B22E	...Repeated for Received Analog 16					
B230	...Repeated for Received Analog 17					
B232	...Repeated for Received Analog 18					
B234	...Repeated for Received Analog 19					
B236	...Repeated for Received Analog 20					
B238	...Repeated for Received Analog 21					
B23A	...Repeated for Received Analog 22					
B23C	...Repeated for Received Analog 23					
B23E	...Repeated for Received Analog 24					
B240	...Repeated for Received Analog 25					
B242	...Repeated for Received Analog 26					
B244	...Repeated for Received Analog 27					
B246	...Repeated for Received Analog 28					
B248	...Repeated for Received Analog 29					
B24A	...Repeated for Received Analog 30					
B24C	...Repeated for Received Analog 31					
B24E	...Repeated for Received Analog 32					
IEC 61850 Configurable Report Settings (Read/Write Setting)						
B290	IEC 61850 Configurable Reports Dataset Items (64 items)	0 to 848	---	1	F615	0 (None)
IEC 61850 XSWI Configuration (Read/Write Setting) (24 modules)						
B370	FlexLogic Operand for IEC 61850 XSWI.ST.Loc Status	0 to 4294967295	---	1	F300	0
B373	...Repeated for module number 2					
B376	...Repeated for module number 3					
B379	...Repeated for module number 4					
B37C	...Repeated for module number 5					
B37F	...Repeated for module number 6					
B382	...Repeated for module number 7					
B385	...Repeated for module number 8					
B388	...Repeated for module number 9					
B38B	...Repeated for module number 10					
B38E	...Repeated for module number 11					
B391	...Repeated for module number 12					
B394	...Repeated for module number 13					
B397	...Repeated for module number 14					
B39A	...Repeated for module number 15					
B39D	...Repeated for module number 16					
B3A0	...Repeated for module number 17					

Table B–10: MODBUS MEMORY MAP (Sheet 51 of 65)

ADDR	REGISTER NAME	RANGE	UNITS	STEP	FORMAT	DEFAULT
B3A3	...Repeated for module number 18					
B3A6	...Repeated for module number 19					
B3A9	...Repeated for module number 20					
B3AC	...Repeated for module number 21					
B3AF	...Repeated for module number 22					
B3B2	...Repeated for module number 23					
B3B5	...Repeated for module number 24					
IEC 61850 XSWI Configuration (Read/Write Command) (24 modules)						
B372	Command to Clear XSWI OpCnt (Operation Counter)	0 to 1	---	1	F126	0 (No)
IEC 61850 GGIO1 Configuration Settings (Read/Write Setting)						
B400	Number of Status Indications in GGIO1	8 to 128	---	8	F001	8
B402	IEC 61850 GGIO1 Indication FlexLogic operands (128 items)	0 to 4294967295	---	1	F300	0
IEC 61850 Configurable GOOSE Transmission (Read/Write Setting) (8 modules)						
B5A0	IEC 61850 Configurable GOOSE Function (GoEna)	0 to 1	---	1	F102	1 (Enabled)
B5A1	IEC 61850 Configurable GOOSE ID	---	---	---	F209	“GOOSEOut_x_”
B5C2	Configurable GOOSE Destination MAC Address	---	---	---	F072	0
B5C5	IEC 61850 Configurable GOOSE VLAN Transmit Priority	0 to 7	---	1	F001	4
B5C6	IEC 61850 Configurable GOOSE VLAN ID	0 to 4095	---	1	F001	0
B5C7	IEC 61850 Configurable GOOSE ETYPE APPID	0 to 16383	---	1	F001	0
B5C8	IEC 61850 Configurable GOOSE ConfRev (Configuration Revision)	1 to 4294967295	---	1	F003	1
B5CA	IEC 61850 Configurable GOOSE Retransmission Curve	0 to 3	---	1	F611	3 (Relaxed)
B5CB	Configurable GOOSE Dataset Items for Transmission (64 items)	0 to 1008	---	1	F616	0 (None)
B60B	...Repeated for module number 2					
B676	...Repeated for module number 3					
B6E1	...Repeated for module number 4					
B74C	...Repeated for module number 5					
B7B7	...Repeated for module number 6					
B822	...Repeated for module number 7					
B88D	...Repeated for module number 8					
IEC 61850 Configurable GOOSE Reception (Read/Write Setting) (16 modules)						
B900	Configurable GOOSE Dataset Items for Reception (32 items)	0 to 197	---	1	F233	0 (None)
B920	...Repeated for module number 2					
B940	...Repeated for module number 3					
B960	...Repeated for module number 4					
B980	...Repeated for module number 5					
B9A0	...Repeated for module number 6					
B9C0	...Repeated for module number 7					
B9E0	...Repeated for module number 8					
BA00	...Repeated for module number 9					
BA20	...Repeated for module number 10					
BA40	...Repeated for module number 11					
BA60	...Repeated for module number 12					
BA80	...Repeated for module number 13					
BAA0	...Repeated for module number 14					
BAC0	...Repeated for module number 15					
BAE0	...Repeated for module number 16					
Contact Inputs (Read/Write Setting) (96 modules)						
BB00	Contact Input 1 Name	---	---	---	F205	“Cont Ip 1“
BB06	Contact Input 1 Events	0 to 1	---	1	F102	0 (Disabled)
BB07	Contact Input 1 Debounce Time	0 to 16	ms	0.5	F001	20
BB08	...Repeated for Contact Input 2					

Table B–10: MODBUS MEMORY MAP (Sheet 52 of 65)

ADDR	REGISTER NAME	RANGE	UNITS	STEP	FORMAT	DEFAULT
BB10	...Repeated for Contact Input 3					
BB18	...Repeated for Contact Input 4					
BB20	...Repeated for Contact Input 5					
BB28	...Repeated for Contact Input 6					
BB30	...Repeated for Contact Input 7					
BB38	...Repeated for Contact Input 8					
BB40	...Repeated for Contact Input 9					
BB48	...Repeated for Contact Input 10					
BB50	...Repeated for Contact Input 11					
BB58	...Repeated for Contact Input 12					
BB60	...Repeated for Contact Input 13					
BB68	...Repeated for Contact Input 14					
BB70	...Repeated for Contact Input 15					
BB78	...Repeated for Contact Input 16					
BB80	...Repeated for Contact Input 17					
BB88	...Repeated for Contact Input 18					
BB90	...Repeated for Contact Input 19					
BB98	...Repeated for Contact Input 20					
BBA0	...Repeated for Contact Input 21					
BBA8	...Repeated for Contact Input 22					
BBB0	...Repeated for Contact Input 23					
BBB8	...Repeated for Contact Input 24					
BBC0	...Repeated for Contact Input 25					
BBC8	...Repeated for Contact Input 26					
BBD0	...Repeated for Contact Input 27					
BBD8	...Repeated for Contact Input 28					
BBE0	...Repeated for Contact Input 29					
BBE8	...Repeated for Contact Input 30					
BBF0	...Repeated for Contact Input 31					
BBF8	...Repeated for Contact Input 32					
BC00	...Repeated for Contact Input 33					
BC08	...Repeated for Contact Input 34					
BC10	...Repeated for Contact Input 35					
BC18	...Repeated for Contact Input 36					
BC20	...Repeated for Contact Input 37					
BC28	...Repeated for Contact Input 38					
BC30	...Repeated for Contact Input 39					
BC38	...Repeated for Contact Input 40					
BC40	...Repeated for Contact Input 41					
BC48	...Repeated for Contact Input 42					
BC50	...Repeated for Contact Input 43					
BC58	...Repeated for Contact Input 44					
BC60	...Repeated for Contact Input 45					
BC68	...Repeated for Contact Input 46					
BC70	...Repeated for Contact Input 47					
BC78	...Repeated for Contact Input 48					
BC80	...Repeated for Contact Input 49					
BC88	...Repeated for Contact Input 50					
BC90	...Repeated for Contact Input 51					
BC98	...Repeated for Contact Input 52					
BCA0	...Repeated for Contact Input 53					
BCA8	...Repeated for Contact Input 54					
BCB0	...Repeated for Contact Input 55					
BCB8	...Repeated for Contact Input 56					

Table B–10: MODBUS MEMORY MAP (Sheet 53 of 65)

ADDR	REGISTER NAME	RANGE	UNITS	STEP	FORMAT	DEFAULT
BCC0	...Repeated for Contact Input 57					
BCC8	...Repeated for Contact Input 58					
BCD0	...Repeated for Contact Input 59					
BCD8	...Repeated for Contact Input 60					
BCE0	...Repeated for Contact Input 61					
BCE8	...Repeated for Contact Input 62					
BCF0	...Repeated for Contact Input 63					
BCF8	...Repeated for Contact Input 64					
BD00	...Repeated for Contact Input 65					
BD08	...Repeated for Contact Input 66					
BD10	...Repeated for Contact Input 67					
BD18	...Repeated for Contact Input 68					
BD20	...Repeated for Contact Input 69					
BD28	...Repeated for Contact Input 70					
BD30	...Repeated for Contact Input 71					
BD38	...Repeated for Contact Input 72					
BD40	...Repeated for Contact Input 73					
BD48	...Repeated for Contact Input 74					
BD50	...Repeated for Contact Input 75					
BD58	...Repeated for Contact Input 76					
BD60	...Repeated for Contact Input 77					
BD68	...Repeated for Contact Input 78					
BD70	...Repeated for Contact Input 79					
BD78	...Repeated for Contact Input 80					
BD80	...Repeated for Contact Input 81					
BD88	...Repeated for Contact Input 82					
BD90	...Repeated for Contact Input 83					
BD98	...Repeated for Contact Input 84					
BDA0	...Repeated for Contact Input 85					
BDA8	...Repeated for Contact Input 86					
BDB0	...Repeated for Contact Input 87					
BDB8	...Repeated for Contact Input 88					
BDC0	...Repeated for Contact Input 89					
BDC8	...Repeated for Contact Input 90					
BDD0	...Repeated for Contact Input 91					
BDD8	...Repeated for Contact Input 92					
BDE0	...Repeated for Contact Input 93					
BDE8	...Repeated for Contact Input 94					
BDF0	...Repeated for Contact Input 95					
BDF8	...Repeated for Contact Input 96					
Contact Input Thresholds (Read/Write Setting)						
BE00	Contact Input *n* Threshold, *n* = 1 to 48 (48 items)	0 to 3	---	1	F128	1 (33 Vdc)
Virtual Inputs (Read/Write Setting) (64 modules)						
BE30	Virtual Input 1 Function	0 to 1	---	1	F102	0 (Disabled)
BE31	Virtual Input 1 Name	---	---	---	F205	“Virt Ip 1“
BE37	Virtual Input 1 Programmed Type	0 to 1	---	1	F127	0 (Latched)
BE38	Virtual Input 1 Events	0 to 1	---	1	F102	0 (Disabled)
BE39	Reserved (3 items)	---	---	---	F001	0
BE3C	...Repeated for Virtual Input 2					
BE48	...Repeated for Virtual Input 3					
BE54	...Repeated for Virtual Input 4					
BE60	...Repeated for Virtual Input 5					
BE6C	...Repeated for Virtual Input 6					
BE78	...Repeated for Virtual Input 7					

Table B–10: MODBUS MEMORY MAP (Sheet 54 of 65)

ADDR	REGISTER NAME	RANGE	UNITS	STEP	FORMAT	DEFAULT
BE84	...Repeated for Virtual Input 8					
BE90	...Repeated for Virtual Input 9					
BE9C	...Repeated for Virtual Input 10					
BEA8	...Repeated for Virtual Input 11					
BEB4	...Repeated for Virtual Input 12					
BEC0	...Repeated for Virtual Input 13					
BECC	...Repeated for Virtual Input 14					
BED8	...Repeated for Virtual Input 15					
BEE4	...Repeated for Virtual Input 16					
BEF0	...Repeated for Virtual Input 17					
BEFC	...Repeated for Virtual Input 18					
BF08	...Repeated for Virtual Input 19					
BF14	...Repeated for Virtual Input 20					
BF20	...Repeated for Virtual Input 21					
BF2C	...Repeated for Virtual Input 22					
BF38	...Repeated for Virtual Input 23					
BF44	...Repeated for Virtual Input 24					
BF50	...Repeated for Virtual Input 25					
BF5C	...Repeated for Virtual Input 26					
BF68	...Repeated for Virtual Input 27					
BF74	...Repeated for Virtual Input 28					
BF80	...Repeated for Virtual Input 29					
BF8C	...Repeated for Virtual Input 30					
BF98	...Repeated for Virtual Input 31					
BFA4	...Repeated for Virtual Input 32					
BFB0	...Repeated for Virtual Input 33					
BFBC	...Repeated for Virtual Input 34					
BFC8	...Repeated for Virtual Input 35					
BFD4	...Repeated for Virtual Input 36					
BFE0	...Repeated for Virtual Input 37					
BFEC	...Repeated for Virtual Input 38					
BFF8	...Repeated for Virtual Input 39					
C004	...Repeated for Virtual Input 40					
C010	...Repeated for Virtual Input 41					
C01C	...Repeated for Virtual Input 42					
C028	...Repeated for Virtual Input 43					
C034	...Repeated for Virtual Input 44					
C040	...Repeated for Virtual Input 45					
C04C	...Repeated for Virtual Input 46					
C058	...Repeated for Virtual Input 47					
C064	...Repeated for Virtual Input 48					
C070	...Repeated for Virtual Input 49					
C07C	...Repeated for Virtual Input 50					
C088	...Repeated for Virtual Input 51					
C094	...Repeated for Virtual Input 52					
C0A0	...Repeated for Virtual Input 53					
C0AC	...Repeated for Virtual Input 54					
C0B8	...Repeated for Virtual Input 55					
C0C4	...Repeated for Virtual Input 56					
C0D0	...Repeated for Virtual Input 57					
C0DC	...Repeated for Virtual Input 58					
C0E8	...Repeated for Virtual Input 59					
C0F4	...Repeated for Virtual Input 60					
C100	...Repeated for Virtual Input 61					

Table B–10: MODBUS MEMORY MAP (Sheet 55 of 65)

ADDR	REGISTER NAME	RANGE	UNITS	STEP	FORMAT	DEFAULT
C10C	...Repeated for Virtual Input 62					
C118	...Repeated for Virtual Input 63					
C124	...Repeated for Virtual Input 64					
Virtual Outputs (Read/Write Setting) (96 modules)						
C130	Virtual Output 1 Name	---	---	---	F205	"Virt Op 1 "
C136	Virtual Output 1 Events	0 to 1	---	1	F102	0 (Disabled)
C137	Reserved	---	---	---	F001	0
C138	...Repeated for Virtual Output 2					
C140	...Repeated for Virtual Output 3					
C148	...Repeated for Virtual Output 4					
C150	...Repeated for Virtual Output 5					
C158	...Repeated for Virtual Output 6					
C160	...Repeated for Virtual Output 7					
C168	...Repeated for Virtual Output 8					
C170	...Repeated for Virtual Output 9					
C178	...Repeated for Virtual Output 10					
C180	...Repeated for Virtual Output 11					
C188	...Repeated for Virtual Output 12					
C190	...Repeated for Virtual Output 13					
C198	...Repeated for Virtual Output 14					
C1A0	...Repeated for Virtual Output 15					
C1A8	...Repeated for Virtual Output 16					
C1B0	...Repeated for Virtual Output 17					
C1B8	...Repeated for Virtual Output 18					
C1C0	...Repeated for Virtual Output 19					
C1C8	...Repeated for Virtual Output 20					
C1D0	...Repeated for Virtual Output 21					
C1D8	...Repeated for Virtual Output 22					
C1E0	...Repeated for Virtual Output 23					
C1E8	...Repeated for Virtual Output 24					
C1F0	...Repeated for Virtual Output 25					
C1F8	...Repeated for Virtual Output 26					
C200	...Repeated for Virtual Output 27					
C208	...Repeated for Virtual Output 28					
C210	...Repeated for Virtual Output 29					
C218	...Repeated for Virtual Output 30					
C220	...Repeated for Virtual Output 31					
C228	...Repeated for Virtual Output 32					
C230	...Repeated for Virtual Output 33					
C238	...Repeated for Virtual Output 34					
C240	...Repeated for Virtual Output 35					
C248	...Repeated for Virtual Output 36					
C250	...Repeated for Virtual Output 37					
C258	...Repeated for Virtual Output 38					
C260	...Repeated for Virtual Output 39					
C268	...Repeated for Virtual Output 40					
C270	...Repeated for Virtual Output 41					
C278	...Repeated for Virtual Output 42					
C280	...Repeated for Virtual Output 43					
C288	...Repeated for Virtual Output 44					
C290	...Repeated for Virtual Output 45					
C298	...Repeated for Virtual Output 46					
C2A0	...Repeated for Virtual Output 47					
C2A8	...Repeated for Virtual Output 48					

Table B–10: MODBUS MEMORY MAP (Sheet 56 of 65)

ADDR	REGISTER NAME	RANGE	UNITS	STEP	FORMAT	DEFAULT
C2B0	...Repeated for Virtual Output 49					
C2B8	...Repeated for Virtual Output 50					
C2C0	...Repeated for Virtual Output 51					
C2C8	...Repeated for Virtual Output 52					
C2D0	...Repeated for Virtual Output 53					
C2D8	...Repeated for Virtual Output 54					
C2E0	...Repeated for Virtual Output 55					
C2E8	...Repeated for Virtual Output 56					
C2F0	...Repeated for Virtual Output 57					
C2F8	...Repeated for Virtual Output 58					
C300	...Repeated for Virtual Output 59					
C308	...Repeated for Virtual Output 60					
C310	...Repeated for Virtual Output 61					
C318	...Repeated for Virtual Output 62					
C320	...Repeated for Virtual Output 63					
C328	...Repeated for Virtual Output 64					
C330	...Repeated for Virtual Output 65					
C338	...Repeated for Virtual Output 66					
C340	...Repeated for Virtual Output 67					
C348	...Repeated for Virtual Output 68					
C350	...Repeated for Virtual Output 69					
C358	...Repeated for Virtual Output 70					
C360	...Repeated for Virtual Output 71					
C368	...Repeated for Virtual Output 72					
C370	...Repeated for Virtual Output 73					
C378	...Repeated for Virtual Output 74					
C380	...Repeated for Virtual Output 75					
C388	...Repeated for Virtual Output 76					
C390	...Repeated for Virtual Output 77					
C398	...Repeated for Virtual Output 78					
C3A0	...Repeated for Virtual Output 79					
C3A8	...Repeated for Virtual Output 80					
C3B0	...Repeated for Virtual Output 81					
C3B8	...Repeated for Virtual Output 82					
C3C0	...Repeated for Virtual Output 83					
C3C8	...Repeated for Virtual Output 84					
C3D0	...Repeated for Virtual Output 85					
C3D8	...Repeated for Virtual Output 86					
C3E0	...Repeated for Virtual Output 87					
C3E8	...Repeated for Virtual Output 88					
C3F0	...Repeated for Virtual Output 89					
C3F8	...Repeated for Virtual Output 90					
C400	...Repeated for Virtual Output 91					
C408	...Repeated for Virtual Output 92					
C410	...Repeated for Virtual Output 93					
C418	...Repeated for Virtual Output 94					
C420	...Repeated for Virtual Output 95					
C428	...Repeated for Virtual Output 96					
Mandatory (Read/Write Setting or Command)						
C430	Test Mode Function	0 to 2	---	1	F245	0 (Disabled)
C431	Force VFD and LED	0 to 1	---	1	F126	0 (No)
C432	Test Mode Initiate (Forcing)	0 to 4294967295	---	1	F300	1
Clear Commands (Read/Write)						
C434	Clear All Relay Records Command	0 to 1	---	1	F126	0 (No)

Table B–10: MODBUS MEMORY MAP (Sheet 57 of 65)

ADDR	REGISTER NAME	RANGE	UNITS	STEP	FORMAT	DEFAULT
Mandatory (Read Only)						
C435	DSP Advanced Diagnostics Active	0 to 1	--	1	F126	0 (No)
C436	Synchrophasor Feature Active	0 to 1	--	1	F126	0 (No)
Mandatory (Read/Write Command)						
C437	Relay Reboot Command	0 to 1	---	1	F126	0 (No)
C438	Save Volatile Data	0 to 1	---	1	F126	0 (No)
Clear Records (Read/Write Setting)						
C452	Clear User Fault Reports Operand	0 to 4294967295	---	1	F300	0
C454	Clear Event Records Operand	0 to 4294967295	---	1	F300	0
C456	Clear Oscillography Operand	0 to 4294967295	---	1	F300	0
C458	Clear Data Logger Operand	0 to 4294967295	---	1	F300	0
C46C	Clear Unauthorized Access Operand	0 to 4294967295	---	1	F300	0
C470	Clear Platform Direct Input/Output Statistics Operand	0 to 4294967295	---	1	F300	0
C472	Reserved (13 items)	---	---	---	F001	0
Platform Direct Outputs (Read/Write Setting) (32 modules)						
C600	Direct Output 1 Operand	0 to 4294967295	---	1	F300	0
C602	Direct Output 1 Events	0 to 1	---	1	F102	0 (Disabled)
C603	...Repeated for Direct Output 2					
C606	...Repeated for Direct Output 3					
C609	...Repeated for Direct Output 4					
C60C	...Repeated for Direct Output 5					
C60F	...Repeated for Direct Output 6					
C612	...Repeated for Direct Output 7					
C615	...Repeated for Direct Output 8					
C618	...Repeated for Direct Output 9					
C61B	...Repeated for Direct Output 10					
C61E	...Repeated for Direct Output 11					
C621	...Repeated for Direct Output 12					
C624	...Repeated for Direct Output 13					
C627	...Repeated for Direct Output 14					
C62A	...Repeated for Direct Output 15					
C62D	...Repeated for Direct Output 16					
C630	...Repeated for Direct Output 17					
C633	...Repeated for Direct Output 18					
C636	...Repeated for Direct Output 19					
C639	...Repeated for Direct Output 20					
C63C	...Repeated for Direct Output 21					
C63F	...Repeated for Direct Output 22					
C642	...Repeated for Direct Output 23					
C645	...Repeated for Direct Output 24					
C648	...Repeated for Direct Output 25					
C64B	...Repeated for Direct Output 26					
C64E	...Repeated for Direct Output 27					
C651	...Repeated for Direct Output 28					
C654	...Repeated for Direct Output 29					
C657	...Repeated for Direct Output 30					
C65A	...Repeated for Direct Output 31					
C65D	...Repeated for Direct Output 32					
Reset (Read/Write Setting)						
C750	FlexLogic operand which initiates a reset	0 to 4294967295	---	1	F300	0
Control Pushbuttons (Read/Write Setting) (7 modules)						
C760	Control Pushbutton 1 Function	0 to 1	---	1	F102	0 (Disabled)
C761	Control Pushbutton 1 Events	0 to 1	---	1	F102	0 (Disabled)
C762	...Repeated for Control Pushbutton 2					

Table B–10: MODBUS MEMORY MAP (Sheet 58 of 65)

ADDR	REGISTER NAME	RANGE	UNITS	STEP	FORMAT	DEFAULT
C764	...Repeated for Control Pushbutton 3					
C766	...Repeated for Control Pushbutton 4					
C768	...Repeated for Control Pushbutton 5					
C76A	...Repeated for Control Pushbutton 6					
C76C	...Repeated for Control Pushbutton 7					
Force Contact Inputs/Outputs (Read/Write Settings)						
C7A0	Force Contact Input *x* State (96 items)	0 to 2	---	1	F144	0 (Disabled)
C800	Force Contact Output *x* State (64 items)	0 to 3	---	1	F131	0 (Disabled)
Direct Inputs/Outputs (Read/Write Setting)						
C880	Direct Device ID	1 to 16	---	1	F001	1
C881	Direct I/O Channel 1 Ring Configuration Function	0 to 1	---	1	F126	0 (No)
C882	Platform Direct I/O Data Rate	64 to 128	kbps	64	F001	64
C883	Direct I/O Channel 2 Ring Configuration Function	0 to 1	---	1	F126	0 (No)
C884	Platform Direct I/O Crossover Function	0 to 1	---	1	F102	0 (Disabled)
Direct Input/Output Commands (Read/Write Command)						
C888	Direct Input/Output Clear Counters Command	0 to 1	---	1	F126	0 (No)
Direct inputs (Read/Write Setting) (32 modules)						
C890	Direct Input 1 Device Number	0 to 16	---	1	F001	0
C891	Direct Input 1 Number	0 to 96	---	1	F001	0
C892	Direct Input 1 Default State	0 to 3	---	1	F086	0 (Off)
C893	Direct Input 1 Events	0 to 1	---	1	F102	0 (Disabled)
C894	...Repeated for Direct Input 2					
C898	...Repeated for Direct Input 3					
C89C	...Repeated for Direct Input 4					
C8A0	...Repeated for Direct Input 5					
C8A4	...Repeated for Direct Input 6					
C8A8	...Repeated for Direct Input 7					
C8AC	...Repeated for Direct Input 8					
C8B0	...Repeated for Direct Input 9					
C8B4	...Repeated for Direct Input 10					
C8B8	...Repeated for Direct Input 11					
C8BC	...Repeated for Direct Input 12					
C8C0	...Repeated for Direct Input 13					
C8C4	...Repeated for Direct Input 14					
C8C8	...Repeated for Direct Input 15					
C8CC	...Repeated for Direct Input 16					
C8D0	...Repeated for Direct Input 17					
C8D4	...Repeated for Direct Input 18					
C8D8	...Repeated for Direct Input 19					
C8DC	...Repeated for Direct Input 20					
C8E0	...Repeated for Direct Input 21					
C8E4	...Repeated for Direct Input 22					
C8E8	...Repeated for Direct Input 23					
C8EC	...Repeated for Direct Input 24					
C8F0	...Repeated for Direct Input 25					
C8F4	...Repeated for Direct Input 26					
C8F8	...Repeated for Direct Input 27					
C8FC	...Repeated for Direct Input 28					
C900	...Repeated for Direct Input 29					
C904	...Repeated for Direct Input 30					
C908	...Repeated for Direct Input 31					
C90C	...Repeated for Direct Input 32					
Direct Input/Output Alarms (Read/Write Setting)						
CAD0	Direct Input/Output Channel 1 CRC Alarm Function	0 to 1	---	1	F102	0 (Disabled)

Table B–10: MODBUS MEMORY MAP (Sheet 59 of 65)

ADDR	REGISTER NAME	RANGE	UNITS	STEP	FORMAT	DEFAULT
CAD1	Direct Input/Output Channel 1 CRC Alarm Message Count	100 to 10000	---	1	F001	600
CAD2	Direct Input/Output Channel 1 CRC Alarm Threshold	1 to 1000	---	1	F001	10
CAD3	Direct Input/Output Channel 1 CRC Alarm Events	0 to 1	---	1	F102	0 (Disabled)
CAD4	Reserved (4 items)	1 to 1000	---	1	F001	10
CAD8	Direct Input/Output Channel 2 CRC Alarm Function	0 to 1	---	1	F102	0 (Disabled)
CAD9	Direct Input/Output Channel 2 CRC Alarm Message Count	100 to 10000	---	1	F001	600
CADA	Direct Input/Output Channel 2 CRC Alarm Threshold	1 to 1000	---	1	F001	10
CADB	Direct Input/Output Channel 2 CRC Alarm Events	0 to 1	---	1	F102	0 (Disabled)
CADC	Reserved (4 items)	1 to 1000	---	1	F001	10
CAE0	Direct Input/Output Ch 1 Unreturned Messages Alarm Function	0 to 1	---	1	F102	0 (Disabled)
CAE1	Direct Input/Output Ch 1 Unreturned Messages Alarm Msg Count	100 to 10000	---	1	F001	600
CAE2	Direct Input/Output Ch 1 Unreturned Messages Alarm Threshold	1 to 1000	---	1	F001	10
CAE3	Direct Input/Output Ch 1 Unreturned Messages Alarm Events	0 to 1	---	1	F102	0 (Disabled)
CAE4	Reserved (4 items)	1 to 1000	---	1	F001	10
CAE8	Direct Input/Output Ch 2 Unreturned Messages Alarm Function	0 to 1	---	1	F102	0 (Disabled)
CAE9	Direct Input/Output Ch 2 Unreturned Messages Alarm Msg Count	100 to 10000	---	1	F001	600
CAEA	Direct Input/Output Ch 2 Unreturned Messages Alarm Threshold	1 to 1000	---	1	F001	10
CAEB	Direct Input/Output Channel 2 Unreturned Messages Alarm Events	0 to 1	---	1	F102	0 (Disabled)
CAEC	Reserved (4 items)	1 to 1000	---	1	F001	10
Remote Devices (Read/Write Setting) (16 modules)						
CB00	Remote Device 1 GSSE/GOOSE Application ID (GOID)	---	---	---	F209	"Remote Device 1"
CB21	Remote Device 1 GOOSE Ethernet APPID	0 to 16383	---	1	F001	0
CB22	Remote Device 1 GOOSE Dataset	0 to 16	---	1	F184	0 (Fixed)
CB23	Remote Device 1 in PMU Scheme	0 to 1	---	1	F126	0 (No)
CB24	Reserved	0 to 3	---	1	F626	0 (None)
CB25	...Repeated for Device 2					
CB4A	...Repeated for Device 3					
CB6F	...Repeated for Device 4					
CB94	...Repeated for Device 5					
CBB9	...Repeated for Device 6					
CBDE	...Repeated for Device 7					
CC03	...Repeated for Device 8					
CC28	...Repeated for Device 9					
CC4D	...Repeated for Device 10					
CC72	...Repeated for Device 11					
CC97	...Repeated for Device 12					
CCBC	...Repeated for Device 13					
CCE1	...Repeated for Device 14					
CD06	...Repeated for Device 15					
CD2B	...Repeated for Device 16					
Remote Inputs (Read/Write Setting) (32 modules)						
CFA0	Remote Input 1 Device	1 to 32	---	1	F001	1
CFA1	Remote Input 1 Bit Pair	0 to 96	---	1	F156	0 (None)
CFA2	Remote Input 1 Default State	0 to 3	---	1	F086	0 (Off)
CFA3	Remote Input 1 Events	0 to 1	---	1	F102	0 (Disabled)
CFA4	Remote Input 1 Name	1 to 64	---	1	F205	"Rem Ip 1"
CFAA	...Repeated for Remote Input 2					
CFB4	...Repeated for Remote Input 3					

Table B–10: MODBUS MEMORY MAP (Sheet 60 of 65)

ADDR	REGISTER NAME	RANGE	UNITS	STEP	FORMAT	DEFAULT
CFBE	...Repeated for Remote Input 4					
CFC8	...Repeated for Remote Input 5					
CFD2	...Repeated for Remote Input 6					
CFDC	...Repeated for Remote Input 7					
CFE6	...Repeated for Remote Input 8					
CFF0	...Repeated for Remote Input 9					
CFFA	...Repeated for Remote Input 10					
D004	...Repeated for Remote Input 11					
D00E	...Repeated for Remote Input 12					
D018	...Repeated for Remote Input 13					
D022	...Repeated for Remote Input 14					
D02C	...Repeated for Remote Input 15					
D036	...Repeated for Remote Input 16					
D040	...Repeated for Remote Input 17					
D04A	...Repeated for Remote Input 18					
D054	...Repeated for Remote Input 19					
D05E	...Repeated for Remote Input 20					
D068	...Repeated for Remote Input 21					
D072	...Repeated for Remote Input 22					
D07C	...Repeated for Remote Input 23					
D086	...Repeated for Remote Input 24					
D090	...Repeated for Remote Input 25					
D09A	...Repeated for Remote Input 26					
D0A4	...Repeated for Remote Input 27					
D0AE	...Repeated for Remote Input 28					
D0B8	...Repeated for Remote Input 29					
D0C2	...Repeated for Remote Input 30					
D0CC	...Repeated for Remote Input 31					
D0D6	...Repeated for Remote Input 32					
Remote Output DNA Pairs (Read/Write Setting) (32 modules)						
D220	Remote Output DNA 1 Operand	0 to 4294967295	---	1	F300	0
D222	Remote Output DNA 1 Events	0 to 1	---	1	F102	0 (Disabled)
D223	Reserved	0 to 1	---	1	F001	0
D224	...Repeated for Remote Output 2					
D228	...Repeated for Remote Output 3					
D22C	...Repeated for Remote Output 4					
D230	...Repeated for Remote Output 5					
D234	...Repeated for Remote Output 6					
D238	...Repeated for Remote Output 7					
D23C	...Repeated for Remote Output 8					
D240	...Repeated for Remote Output 9					
D244	...Repeated for Remote Output 10					
D248	...Repeated for Remote Output 11					
D24C	...Repeated for Remote Output 12					
D250	...Repeated for Remote Output 13					
D254	...Repeated for Remote Output 14					
D258	...Repeated for Remote Output 15					
D25C	...Repeated for Remote Output 16					
D260	...Repeated for Remote Output 17					
D264	...Repeated for Remote Output 18					
D268	...Repeated for Remote Output 19					
D26C	...Repeated for Remote Output 20					
D270	...Repeated for Remote Output 21					
D274	...Repeated for Remote Output 22					

Table B–10: MODBUS MEMORY MAP (Sheet 61 of 65)

ADDR	REGISTER NAME	RANGE	UNITS	STEP	FORMAT	DEFAULT
D278	...Repeated for Remote Output 23					
D27C	...Repeated for Remote Output 24					
D280	...Repeated for Remote Output 25					
D284	...Repeated for Remote Output 26					
D288	...Repeated for Remote Output 27					
D28C	...Repeated for Remote Output 28					
D290	...Repeated for Remote Output 29					
D294	...Repeated for Remote Output 30					
D298	...Repeated for Remote Output 31					
D29C	...Repeated for Remote Output 32					
Remote Output UserSt Pairs (Read/Write Setting) (32 modules)						
D2A0	Remote Output UserSt 1 Operand	0 to 4294967295	---	1	F300	0
D2A2	Remote Output UserSt 1 Events	0 to 1	---	1	F102	0 (Disabled)
D2A3	Reserved	0 to 1	---	1	F001	0
D2A4	...Repeated for Remote Output 2					
D2A8	...Repeated for Remote Output 3					
D2AC	...Repeated for Remote Output 4					
D2B0	...Repeated for Remote Output 5					
D2B4	...Repeated for Remote Output 6					
D2B8	...Repeated for Remote Output 7					
D2BC	...Repeated for Remote Output 8					
D2C0	...Repeated for Remote Output 9					
D2C4	...Repeated for Remote Output 10					
D2C8	...Repeated for Remote Output 11					
D2CC	...Repeated for Remote Output 12					
D2D0	...Repeated for Remote Output 13					
D2D4	...Repeated for Remote Output 14					
D2D8	...Repeated for Remote Output 15					
D2DC	...Repeated for Remote Output 16					
D2E0	...Repeated for Remote Output 17					
D2E4	...Repeated for Remote Output 18					
D2E8	...Repeated for Remote Output 19					
D2EC	...Repeated for Remote Output 20					
D2F0	...Repeated for Remote Output 21					
D2F4	...Repeated for Remote Output 22					
D2F8	...Repeated for Remote Output 23					
D2FC	...Repeated for Remote Output 24					
D300	...Repeated for Remote Output 25					
D304	...Repeated for Remote Output 26					
D308	...Repeated for Remote Output 27					
D30C	...Repeated for Remote Output 28					
D310	...Repeated for Remote Output 29					
D314	...Repeated for Remote Output 30					
D318	...Repeated for Remote Output 31					
D31C	...Repeated for Remote Output 32					
IEC 61850 GGIO2 Control Configuration (Read/Write Setting) (64 modules)						
D320	IEC 61850 GGIO2.CF.SPCSO1.ctlModel Value	0 to 2	---	1	F001	1
D321	IEC 61850 GGIO2.CF.SPCSO2.ctlModel Value	0 to 2	---	1	F001	1
D322	IEC 61850 GGIO2.CF.SPCSO3.ctlModel Value	0 to 2	---	1	F001	1
D323	IEC 61850 GGIO2.CF.SPCSO4.ctlModel Value	0 to 2	---	1	F001	1
D324	IEC 61850 GGIO2.CF.SPCSO5.ctlModel Value	0 to 2	---	1	F001	1
D325	IEC 61850 GGIO2.CF.SPCSO6.ctlModel Value	0 to 2	---	1	F001	1
D326	IEC 61850 GGIO2.CF.SPCSO7.ctlModel Value	0 to 2	---	1	F001	1
D327	IEC 61850 GGIO2.CF.SPCSO8.ctlModel Value	0 to 2	---	1	F001	1

Table B–10: MODBUS MEMORY MAP (Sheet 62 of 65)

ADDR	REGISTER NAME	RANGE	UNITS	STEP	FORMAT	DEFAULT
D328	IEC 61850 GGIO2.CF.SPCSO9.ctlModel Value	0 to 2	---	1	F001	1
D329	IEC 61850 GGIO2.CF.SPCSO10.ctlModel Value	0 to 2	---	1	F001	1
D32A	IEC 61850 GGIO2.CF.SPCSO11.ctlModel Value	0 to 2	---	1	F001	1
D32B	IEC 61850 GGIO2.CF.SPCSO12.ctlModel Value	0 to 2	---	1	F001	1
D32C	IEC 61850 GGIO2.CF.SPCSO13.ctlModel Value	0 to 2	---	1	F001	1
D32D	IEC 61850 GGIO2.CF.SPCSO14.ctlModel Value	0 to 2	---	1	F001	1
D32E	IEC 61850 GGIO2.CF.SPCSO15.ctlModel Value	0 to 2	---	1	F001	1
D32F	IEC 61850 GGIO2.CF.SPCSO16.ctlModel Value	0 to 2	---	1	F001	1
D330	IEC 61850 GGIO2.CF.SPCSO17.ctlModel Value	0 to 2	---	1	F001	1
D331	IEC 61850 GGIO2.CF.SPCSO18.ctlModel Value	0 to 2	---	1	F001	1
D332	IEC 61850 GGIO2.CF.SPCSO19.ctlModel Value	0 to 2	---	1	F001	1
D333	IEC 61850 GGIO2.CF.SPCSO20.ctlModel Value	0 to 2	---	1	F001	1
D334	IEC 61850 GGIO2.CF.SPCSO21.ctlModel Value	0 to 2	---	1	F001	1
D335	IEC 61850 GGIO2.CF.SPCSO22.ctlModel Value	0 to 2	---	1	F001	1
D336	IEC 61850 GGIO2.CF.SPCSO23.ctlModel Value	0 to 2	---	1	F001	1
D337	IEC 61850 GGIO2.CF.SPCSO24.ctlModel Value	0 to 2	---	1	F001	1
D338	IEC 61850 GGIO2.CF.SPCSO25.ctlModel Value	0 to 2	---	1	F001	1
D339	IEC 61850 GGIO2.CF.SPCSO26.ctlModel Value	0 to 2	---	1	F001	1
D33A	IEC 61850 GGIO2.CF.SPCSO27.ctlModel Value	0 to 2	---	1	F001	1
D33B	IEC 61850 GGIO2.CF.SPCSO28.ctlModel Value	0 to 2	---	1	F001	1
D33C	IEC 61850 GGIO2.CF.SPCSO29.ctlModel Value	0 to 2	---	1	F001	1
D33D	IEC 61850 GGIO2.CF.SPCSO30.ctlModel Value	0 to 2	---	1	F001	1
D33E	IEC 61850 GGIO2.CF.SPCSO31.ctlModel Value	0 to 2	---	1	F001	1
D33F	IEC 61850 GGIO2.CF.SPCSO32.ctlModel Value	0 to 2	---	1	F001	1
D340	IEC 61850 GGIO2.CF.SPCSO33.ctlModel Value	0 to 2	---	1	F001	1
D341	IEC 61850 GGIO2.CF.SPCSO34.ctlModel Value	0 to 2	---	1	F001	1
D342	IEC 61850 GGIO2.CF.SPCSO35.ctlModel Value	0 to 2	---	1	F001	1
D343	IEC 61850 GGIO2.CF.SPCSO36.ctlModel Value	0 to 2	---	1	F001	1
D344	IEC 61850 GGIO2.CF.SPCSO37.ctlModel Value	0 to 2	---	1	F001	1
D345	IEC 61850 GGIO2.CF.SPCSO38.ctlModel Value	0 to 2	---	1	F001	1
D346	IEC 61850 GGIO2.CF.SPCSO39.ctlModel Value	0 to 2	---	1	F001	1
D347	IEC 61850 GGIO2.CF.SPCSO40.ctlModel Value	0 to 2	---	1	F001	1
D348	IEC 61850 GGIO2.CF.SPCSO41.ctlModel Value	0 to 2	---	1	F001	1
D349	IEC 61850 GGIO2.CF.SPCSO42.ctlModel Value	0 to 2	---	1	F001	1
D34A	IEC 61850 GGIO2.CF.SPCSO43.ctlModel Value	0 to 2	---	1	F001	1
D34B	IEC 61850 GGIO2.CF.SPCSO44.ctlModel Value	0 to 2	---	1	F001	1
D34C	IEC 61850 GGIO2.CF.SPCSO45.ctlModel Value	0 to 2	---	1	F001	1
D34D	IEC 61850 GGIO2.CF.SPCSO46.ctlModel Value	0 to 2	---	1	F001	1
D34E	IEC 61850 GGIO2.CF.SPCSO47.ctlModel Value	0 to 2	---	1	F001	1
D34F	IEC 61850 GGIO2.CF.SPCSO48.ctlModel Value	0 to 2	---	1	F001	1
D350	IEC 61850 GGIO2.CF.SPCSO49.ctlModel Value	0 to 2	---	1	F001	1
D351	IEC 61850 GGIO2.CF.SPCSO50.ctlModel Value	0 to 2	---	1	F001	1
D352	IEC 61850 GGIO2.CF.SPCSO51.ctlModel Value	0 to 2	---	1	F001	1
D353	IEC 61850 GGIO2.CF.SPCSO52.ctlModel Value	0 to 2	---	1	F001	1
D354	IEC 61850 GGIO2.CF.SPCSO53.ctlModel Value	0 to 2	---	1	F001	1
D355	IEC 61850 GGIO2.CF.SPCSO54.ctlModel Value	0 to 2	---	1	F001	1
D356	IEC 61850 GGIO2.CF.SPCSO55.ctlModel Value	0 to 2	---	1	F001	1
D357	IEC 61850 GGIO2.CF.SPCSO56.ctlModel Value	0 to 2	---	1	F001	1
D358	IEC 61850 GGIO2.CF.SPCSO57.ctlModel Value	0 to 2	---	1	F001	1
D359	IEC 61850 GGIO2.CF.SPCSO58.ctlModel Value	0 to 2	---	1	F001	1
D35A	IEC 61850 GGIO2.CF.SPCSO59.ctlModel Value	0 to 2	---	1	F001	1
D35B	IEC 61850 GGIO2.CF.SPCSO60.ctlModel Value	0 to 2	---	1	F001	1
D35C	IEC 61850 GGIO2.CF.SPCSO61.ctlModel Value	0 to 2	---	1	F001	1
D35D	IEC 61850 GGIO2.CF.SPCSO62.ctlModel Value	0 to 2	---	1	F001	1

Table B–10: MODBUS MEMORY MAP (Sheet 63 of 65)

ADDR	REGISTER NAME	RANGE	UNITS	STEP	FORMAT	DEFAULT
D35E	IEC 61850 GGIO2.CF.SPCSO63.ctlModel Value	0 to 2	---	1	F001	1
D35F	IEC 61850 GGIO2.CF.SPCSO64.ctlModel Value	0 to 2	---	1	F001	1
Remote Device Status (Read Only) (16 modules)						
D360	Remote Device 1 StNum	0 to 4294967295	---	1	F003	0
D362	Remote Device 1 SqNum	0 to 4294967295	---	1	F003	0
D364	...Repeated for Remote Device 2					
D368	...Repeated for Remote Device 3					
D36C	...Repeated for Remote Device 4					
D370	...Repeated for Remote Device 5					
D374	...Repeated for Remote Device 6					
D378	...Repeated for Remote Device 7					
D37C	...Repeated for Remote Device 8					
D380	...Repeated for Remote Device 9					
D384	...Repeated for Remote Device 10					
D388	...Repeated for Remote Device 11					
D38C	...Repeated for Remote Device 12					
D390	...Repeated for Remote Device 13					
D394	...Repeated for Remote Device 14					
D398	...Repeated for Remote Device 15					
D39C	...Repeated for Remote Device 16					
Contact Outputs (Read/Write Setting) (64 modules)						
D3E0	Contact Output 1 Name	---	---	---	F205	“Cont Op 1"
D3E6	Contact Output 1 Operation	0 to 4294967295	---	1	F300	0
D3E8	Contact Output 1 Seal In	0 to 4294967295	---	1	F300	0
D3EA	Latching Output 1 Reset	0 to 4294967295	---	1	F300	0
D3EC	Contact Output 1 Events	0 to 1	---	1	F102	1 (Enabled)
D3ED	Latching Output 1 Type	0 to 1	---	1	F090	0 (Operate-dominant)
D3EE	Reserved	---	---	---	F001	0
D3EF	...Repeated for Contact Output 2					
D3FE	...Repeated for Contact Output 3					
D40D	...Repeated for Contact Output 4					
D41C	...Repeated for Contact Output 5					
D42B	...Repeated for Contact Output 6					
D43A	...Repeated for Contact Output 7					
D449	...Repeated for Contact Output 8					
D458	...Repeated for Contact Output 9					
D467	...Repeated for Contact Output 10					
D476	...Repeated for Contact Output 11					
D485	...Repeated for Contact Output 12					
D494	...Repeated for Contact Output 13					
D4A3	...Repeated for Contact Output 14					
D4B2	...Repeated for Contact Output 15					
D4C1	...Repeated for Contact Output 16					
D4D0	...Repeated for Contact Output 17					
D4DF	...Repeated for Contact Output 18					
D4EE	...Repeated for Contact Output 19					
D4FD	...Repeated for Contact Output 20					
D50C	...Repeated for Contact Output 21					
D51B	...Repeated for Contact Output 22					
D52A	...Repeated for Contact Output 23					
D539	...Repeated for Contact Output 24					
D548	...Repeated for Contact Output 25					
D557	...Repeated for Contact Output 26					

Table B–10: MODBUS MEMORY MAP (Sheet 64 of 65)

ADDR	REGISTER NAME	RANGE	UNITS	STEP	FORMAT	DEFAULT
D566	...Repeated for Contact Output 27					
D575	...Repeated for Contact Output 28					
D584	...Repeated for Contact Output 29					
D593	...Repeated for Contact Output 30					
D5A2	...Repeated for Contact Output 31					
D5B1	...Repeated for Contact Output 32					
D5C0	...Repeated for Contact Output 33					
D5CF	...Repeated for Contact Output 34					
D5DE	...Repeated for Contact Output 35					
D5ED	...Repeated for Contact Output 36					
D5FC	...Repeated for Contact Output 37					
D60B	...Repeated for Contact Output 38					
D61A	...Repeated for Contact Output 39					
D629	...Repeated for Contact Output 40					
D638	...Repeated for Contact Output 41					
D647	...Repeated for Contact Output 42					
D656	...Repeated for Contact Output 43					
D665	...Repeated for Contact Output 44					
D674	...Repeated for Contact Output 45					
D683	...Repeated for Contact Output 46					
D692	...Repeated for Contact Output 47					
D6A1	...Repeated for Contact Output 48					
D6B0	...Repeated for Contact Output 49					
D6BF	...Repeated for Contact Output 50					
D6CE	...Repeated for Contact Output 51					
D6DD	...Repeated for Contact Output 52					
D6EC	...Repeated for Contact Output 53					
D6FB	...Repeated for Contact Output 54					
D70A	...Repeated for Contact Output 55					
D719	...Repeated for Contact Output 56					
D728	...Repeated for Contact Output 57					
D737	...Repeated for Contact Output 58					
D746	...Repeated for Contact Output 59					
D755	...Repeated for Contact Output 60					
D764	...Repeated for Contact Output 61					
D773	...Repeated for Contact Output 62					
D782	...Repeated for Contact Output 63					
D791	...Repeated for Contact Output 64					
DCmA Inputs (Read/Write Setting) (24 modules)						
D7A0	DCmA Inputs 1 Function	0 to 1	---	1	F102	0 (Disabled)
D7A1	DCmA Inputs 1 ID	---	---	---	F205	“DCMA Ip 1"
D7A7	Reserved 1 (4 items)	0 to 65535	---	1	F001	0
D7AB	DCmA Inputs 1 Units	---	---	---	F206	“mA”
D7AE	DCmA Inputs 1 Range	0 to 6	---	1	F173	6 (4 to 20 mA)
D7AF	DCmA Inputs 1 Minimum Value	-9999.999 to 9999.999	---	0.001	F004	4000
D7B1	DCmA Inputs 1 Maximum Value	-9999.999 to 9999.999	---	0.001	F004	20000
D7B3	...Repeated for DCmA Inputs 2					
D7C6	...Repeated for DCmA Inputs 3					
D7D9	...Repeated for DCmA Inputs 4					
D7EC	...Repeated for DCmA Inputs 5					
D7FF	...Repeated for DCmA Inputs 6					
D812	...Repeated for DCmA Inputs 7					
D825	...Repeated for DCmA Inputs 8					
D838	...Repeated for DCmA Inputs 9					

Table B–10: MODBUS MEMORY MAP (Sheet 65 of 65)

ADDR	REGISTER NAME	RANGE	UNITS	STEP	FORMAT	DEFAULT
D84B	...Repeated for DCmA Inputs 10					
D85E	...Repeated for DCmA Inputs 11					
D871	...Repeated for DCmA Inputs 12					
D884	...Repeated for DCmA Inputs 13					
D897	...Repeated for DCmA Inputs 14					
D8AA	...Repeated for DCmA Inputs 15					
D8BD	...Repeated for DCmA Inputs 16					
D8D0	...Repeated for DCmA Inputs 17					
D8E3	...Repeated for DCmA Inputs 18					
D8F6	...Repeated for DCmA Inputs 19					
D909	...Repeated for DCmA Inputs 20					
D91C	...Repeated for DCmA Inputs 21					
D92F	...Repeated for DCmA Inputs 22					
D942	...Repeated for DCmA Inputs 23					
D955	...Repeated for DCmA Inputs 24					
DNP/IEC Points (Read/Write Setting)						
D968	DNP/IEC 60870-5-104 Binary Input Points (256 items)	0 to 4294967295	---	1	F300	0
DB68	DNP/IEC 60870-5-104 Analog Input Points (256 items)	0 to 65535	---	1	F600	0
Settings File Template (Read/Write Setting)						
ED00	FlexLogic Displays Active	0 to 1	---	1	F102	1 (Enabled)
ED01	Template Access	---	---	---	F205	(none)
Setting File Template (Read Only Non-Volatile)						
ED07	Last Settings Change Date	0 to 4294967295	---	1	F050	0
Settings File Template (Read/Write Setting)						
ED09	Template Bitmask (750 items)	0 to 65535	---	1	F001	0

F001
UR_UINT16 UNSIGNED 16 BIT INTEGER

F002
UR_SINT16 SIGNED 16 BIT INTEGER

F003
UR_UINT32 UNSIGNED 32 BIT INTEGER (2 registers)

High order word is stored in the first register.
Low order word is stored in the second register.

F004
UR_SINT32 SIGNED 32 BIT INTEGER (2 registers)

High order word is stored in the first register.
Low order word is stored in the second register.

F011
UR_UINT16 FLEXCURVE DATA (120 points)

A FlexCurve is an array of 120 consecutive data points (x, y) that are interpolated to generate a smooth curve. The y-axis is the user-defined trip or operation time setting; the x-axis is the pickup ratio and is pre-defined. See format F119 for a listing of the pickup ratios; the enumeration value for the pickup ratio indicates the off-set into the FlexCurve base address where the corresponding time value is stored.

F013
POWER_FACTOR (SIGNED 16 BIT INTEGER)

Positive values indicate lagging power factor; negative values indicate leading.

F050
UR_UINT32 TIME and DATE (UNSIGNED 32 BIT INTEGER)

Gives the current time in seconds elapsed since 00:00:00 January 1, 1970.

F051
UR_UINT32 DATE in SR format (alternate format for F050)

First 16 bits are Month/Day (MM/DD/xxxx).
Month: 1=January, 2=February,...,12=December.
Day: 1 to 31 in steps of 1.
Last 16 bits are Year (xx/xx/YYYY): 1970 to 2106 in steps of 1.

F052
UR_UINT32 TIME in SR format (alternate format for F050)

First 16 bits are Hours/Minutes (HH:MM:xx.xxx).
Hours: 0=12am, 1=1am,...,12=12pm,...23=11pm.
Minutes: 0 to 59 in steps of 1.
Last 16 bits are Seconds (xx:xx:.SS.SSS): (0=00.000s, 1=00.001,...,59999=59.999s).

F060
FLOATING_POINT IEEE FLOATING POINT (32 bits)

F072
HEX6 6 BYTES - 12 ASCII DIGITS

F073
HEX8 8 BYTES - 16 ASCII DIGITS

F074
HEX20 20 BYTES - 40 ASCII DIGITS

F083
ENUMERATION: SELECTOR MODES

0 = Time-Out, 1 = Acknowledge

F084
ENUMERATION: SELECTOR POWER UP

0 = Restore, 1 = Synchronize, 2 = Sync/Restore

F086
ENUMERATION: CONTACT INPUT DEFAULT STATE

0 = Off, 1 = On, 2= Latest/Off, 3 = Latest/On

F090
ENUMERATION: LATCHING OUTPUT TYPE

0 = Operate-dominant, 1 = Reset-dominant

F091
ENUMERATION: VOLTAGE DIFFERENTIAL BANK GROUND TYPE

0 = Grounded, 1 = Ungrounded

F092
ENUMERATION: AUTOMATIC SETTING FUNCTION

0 = Disabled, 1 = Manual, 2 = Auto

F093
ENUMERATION: BANK OVERVOLTAGE GROUND TYPE

0 = Grounded, 1 = Ungrounded, 2 = Ungrounded without Vn

F094
ENUMERATION: BANK OVERVOLTAGE CURVE TYPE

0 = FlexCurve A, 1 = FlexCurve B, 2 = FlexCurve C,
3 = FlexCurve D

F100
ENUMERATION: VT CONNECTION TYPE

0 = Wye, 1 = Delta

F101
ENUMERATION: MESSAGE DISPLAY INTENSITY

0 = 25%, 1 = 50%, 2 = 75%, 3 = 100%

F102
ENUMERATION: DISABLED/ENABLED

0 = Disabled, 1 = Enabled

F103
ENUMERATION: CURVE SHAPES

Bitmask	Curve shape
0	IEEE Mod Inv
1	IEEE Very Inv
2	IEEE Ext Inv
3	IEC Curve A
4	IEC Curve B
5	IEC Curve C
6	IEC Short Inv
7	IAC Ext Inv
8	IAC Very Inv

Bitmask	Curve shape
9	IAC Inverse
10	IAC Short Inv
11	I2t
12	Definite Time
13	FlexCurve A
14	FlexCurve B
15	FlexCurve C
16	FlexCurve D

F104
ENUMERATION: RESET TYPE

0 = Instantaneous, 1 = Timed

F106
ENUMERATION: PHASE ROTATION

0 = ABC, 1 = ACB

F108
ENUMERATION: OFF/ON

0 = Off, 1 = On

F109
ENUMERATION: CONTACT OUTPUT OPERATION

0 = Self-reset, 1 = Latched, 2 = Disabled

F111
ENUMERATION: UNDERVOLTAGE CURVE SHAPES

0 = Definite Time, 1 = Inverse Time

F112
ENUMERATION: RS485 BAUD RATES

Bitmask	Value
0	300
1	1200
2	2400
3	4800

Bitmask	Value
4	9600
5	19200
6	38400
7	57600

Bitmask	Value
8	115200
9	14400
10	28800
11	33600

F113
ENUMERATION: PARITY

0 = None, 1 = Odd, 2 = Even

F114
ENUMERATION: IRIG-B SIGNAL TYPE

0 = None, 1 = DC Shift, 2 = Amplitude Modulated

F116
ENUMERATION: NEUTRAL OVERVOLTAGE CURVES

0 = Definite Time, 1 = FlexCurve A, 2 = FlexCurve B,
3 = FlexCurve C

F118
ENUMERATION: OSCILLOGRAPHY MODE

0 = Automatic Overwrite, 1 = Protected

F122
ENUMERATION: ELEMENT INPUT SIGNAL TYPE

0 = Phasor, 1 = RMS

F123
ENUMERATION: CT SECONDARY

0 = 1 A, 1 = 5 A

F124
ENUMERATION: LIST OF ELEMENTS

Bitmask	Element
0	Phase Instantaneous Overcurrent 1
1	Phase Instantaneous Overcurrent 2
2	Phase Instantaneous Overcurrent 3
3	Phase Instantaneous Overcurrent 4
4	Phase Instantaneous Overcurrent 5
5	Phase Instantaneous Overcurrent 6
6	Phase Instantaneous Overcurrent 7

Bitmask	Element
7	Phase Instantaneous Overcurrent 8
8	Phase Instantaneous Overcurrent 9
9	Phase Instantaneous Overcurrent 10
10	Phase Instantaneous Overcurrent 11
11	Phase Instantaneous Overcurrent 12
16	Phase Time Overcurrent 1
17	Phase Time Overcurrent 2
18	Phase Time Overcurrent 3
19	Phase Time Overcurrent 4
20	Phase Time Overcurrent 5
21	Phase Time Overcurrent 6
24	Phase Directional Overcurrent 1
25	Phase Directional Overcurrent 2
32	Neutral Instantaneous Overcurrent 1
33	Neutral Instantaneous Overcurrent 2
34	Neutral Instantaneous Overcurrent 3
35	Neutral Instantaneous Overcurrent 4
36	Neutral Instantaneous Overcurrent 5
37	Neutral Instantaneous Overcurrent 6
38	Neutral Instantaneous Overcurrent 7
39	Neutral Instantaneous Overcurrent 8
40	Neutral Instantaneous Overcurrent 9
41	Neutral Instantaneous Overcurrent 10
42	Neutral Instantaneous Overcurrent 11
43	Neutral Instantaneous Overcurrent 12
48	Neutral Time Overcurrent 1
49	Neutral Time Overcurrent 2
50	Neutral Time Overcurrent 3
51	Neutral Time Overcurrent 4
52	Neutral Time Overcurrent 5
53	Neutral Time Overcurrent 6
56	Neutral Directional Overcurrent 1
60	Negative Sequence Directional Overcurrent 1
61	Negative Sequence Directional Overcurrent 2
64	Ground Instantaneous Overcurrent 1
65	Ground Instantaneous Overcurrent 2
66	Ground Instantaneous Overcurrent 3
67	Ground Instantaneous Overcurrent 4
68	Ground Instantaneous Overcurrent 5
69	Ground Instantaneous Overcurrent 6
70	Ground Instantaneous Overcurrent 7
71	Ground Instantaneous Overcurrent 8
72	Ground Instantaneous Overcurrent 9
73	Ground Instantaneous Overcurrent 10
74	Ground Instantaneous Overcurrent 11
75	Ground Instantaneous Overcurrent 12
80	Ground Time Overcurrent 1
81	Ground Time Overcurrent 2
82	Ground Time Overcurrent 3
83	Ground Time Overcurrent 4
84	Ground Time Overcurrent 5
85	Ground Time Overcurrent 6
96	Negative Sequence Instantaneous Overcurrent 1

Bitmask	Element
97	Negative Sequence Instantaneous Overcurrent 2
112	Negative Sequence Time Overcurrent 1
113	Negative Sequence Time Overcurrent 2
120	Negative Sequence Overvoltage 1
121	Negative Sequence Overvoltage 2
122	Negative Sequence Overvoltage 3
144	Phase Undervoltage 1
145	Phase Undervoltage 2
146	Phase Undervoltage 3
148	Auxiliary Overvoltage 1
149	Auxiliary Overvoltage 2
150	Auxiliary Overvoltage 3
151	Phase Overvoltage 1
152	Phase Overvoltage 2
153	Phase Overvoltage 3
156	Neutral Overvoltage 1
157	Neutral Overvoltage 2
158	Neutral Overvoltage 3
224	SRC1 VT Fuse Failure
225	SRC2 VT Fuse Failure
226	SRC3 VT Fuse Failure
227	SRC4 VT Fuse Failure
228	SRC5 VT Fuse Failure
229	SRC6 VT Fuse Failure
232	SRC1 50DD (Disturbance Detection)
233	SRC2 50DD (Disturbance Detection)
234	SRC3 50DD (Disturbance Detection)
235	SRC4 50DD (Disturbance Detection)
236	SRC5 50DD (Disturbance Detection)
237	SRC6 50DD (Disturbance Detection)
280	Breaker Failure 1
294	Breaker 1 Flashover
336	Setting Group
337	Reset
340	Neutral Voltage Unbalance 1
341	Neutral Voltage Unbalance 2
342	Neutral Voltage Unbalance 3
388	Selector switch 1
389	Selector switch 2
390	Control pushbutton 1
391	Control pushbutton 2
392	Control pushbutton 3
393	Control pushbutton 4
394	Control pushbutton 5
395	Control pushbutton 6
396	Control pushbutton 7
400	FlexElement 1
401	FlexElement 2
402	FlexElement 3
403	FlexElement 4
404	FlexElement 5
405	FlexElement 6
406	FlexElement 7

Bitmask	Element
407	FlexElement 8
408	FlexElement 9
409	FlexElement 10
410	FlexElement 11
411	FlexElement 12
412	FlexElement 13
413	FlexElement 14
414	FlexElement 15
415	FlexElement 16
420	Non-volatile Latch 1
421	Non-volatile Latch 2
422	Non-volatile Latch 3
423	Non-volatile Latch 4
424	Non-volatile Latch 5
425	Non-volatile Latch 6
426	Non-volatile Latch 7
427	Non-volatile Latch 8
428	Non-volatile Latch 9
429	Non-volatile Latch 10
430	Non-volatile Latch 11
431	Non-volatile Latch 12
432	Non-volatile Latch 13
433	Non-volatile Latch 14
434	Non-volatile Latch 15
435	Non-volatile Latch 16
544	Digital Counter 1
545	Digital Counter 2
546	Digital Counter 3
547	Digital Counter 4
548	Digital Counter 5
549	Digital Counter 6
550	Digital Counter 7
551	Digital Counter 8
692	Digital Element 1
693	Digital Element 2
694	Digital Element 3
695	Digital Element 4
696	Digital Element 5
697	Digital Element 6
698	Digital Element 7
699	Digital Element 8
700	Digital Element 9
701	Digital Element 10
702	Digital Element 11
703	Digital Element 12
704	Digital Element 13
705	Digital Element 14
706	Digital Element 15
707	Digital Element 16
708	Digital Element 17
709	Digital Element 18
710	Digital Element 19
711	Digital Element 20

Bitmask	Element
712	Digital Element 21
713	Digital Element 22
714	Digital Element 23
715	Digital Element 24
716	Digital Element 25
717	Digital Element 26
718	Digital Element 27
719	Digital Element 28
720	Digital Element 29
721	Digital Element 30
722	Digital Element 31
723	Digital Element 32
724	Digital Element 33
725	Digital Element 34
726	Digital Element 35
727	Digital Element 36
728	Digital Element 37
729	Digital Element 38
730	Digital Element 39
731	Digital Element 40
732	Digital Element 41
733	Digital Element 42
734	Digital Element 43
735	Digital Element 44
736	Digital Element 45
737	Digital Element 46
738	Digital Element 47
739	Digital Element 48
781	Time of day timer 1
782	Time of day timer 2
783	Time of day timer 3
784	Time of day timer 4
785	Time of day timer 5
787	Automatic voltage regulator 1
788	Automatic voltage regulator 2
789	Automatic voltage regulator 3
790	Phase current unbalance 1
791	Phase current unbalance 2
792	Phase current unbalance 3
793	Phase current unbalance 1 continued
794	Phase current unbalance 2 continued
795	Phase current unbalance 3 continued
803	Voltage differential 1
804	Voltage differential 2
805	Voltage differential 3
806	Voltage differential 1 continued
807	Voltage differential 2 continued
808	Voltage differential 3 continued
813	Capacitor control 1
814	Capacitor control 2
815	Capacitor control 3
816	Capacitor control 4
820	Neutral current unbalance 1

Bitmask	Element
821	Neutral current unbalance 2
822	Neutral current unbalance 3
830	Bank phase overvoltage 1 phase A
831	Bank phase overvoltage 1 phase B
832	Bank phase overvoltage 1 phase C
833	Bank phase overvoltage 2 phase A
834	Bank phase overvoltage 2 phase B
835	Bank phase overvoltage 2 phase C
842	Trip Bus 1
843	Trip Bus 2
844	Trip Bus 3
845	Trip Bus 4
846	Trip Bus 5
847	Trip Bus 6
849	RTD Input 1
850	RTD Input 2
851	RTD Input 3
852	RTD Input 4
853	RTD Input 5
854	RTD Input 6
855	RTD Input 7
856	RTD Input 8
857	RTD Input 9
858	RTD Input 10
859	RTD Input 11
860	RTD Input 12
861	RTD Input 13
862	RTD Input 14
863	RTD Input 15
864	RTD Input 16
865	RTD Input 17
866	RTD Input 18
867	RTD Input 19
868	RTD Input 20
869	RTD Input 21
870	RTD Input 22
871	RTD Input 23
872	RTD Input 24
873	RTD Input 25
874	RTD Input 26
875	RTD Input 27
876	RTD Input 28
877	RTD Input 29
878	RTD Input 30
879	RTD Input 31
880	RTD Input 32
881	RTD Input 33
882	RTD Input 34
883	RTD Input 35
884	RTD Input 36
885	RTD Input 37
886	RTD Input 38
887	RTD Input 39

Bitmask	Element
888	RTD Input 40
889	RTD Input 41
890	RTD Input 42
891	RTD Input 43
892	RTD Input 44
893	RTD Input 45
894	RTD Input 46
895	RTD Input 47
896	RTD Input 48
900	User-Programmable Pushbutton 1
901	User-Programmable Pushbutton 2
902	User-Programmable Pushbutton 3
903	User-Programmable Pushbutton 4
904	User-Programmable Pushbutton 5
905	User-Programmable Pushbutton 6
906	User-Programmable Pushbutton 7
907	User-Programmable Pushbutton 8
908	User-Programmable Pushbutton 9
909	User-Programmable Pushbutton 10
910	User-Programmable Pushbutton 11
911	User-Programmable Pushbutton 12
912	User-Programmable Pushbutton 13
913	User-Programmable Pushbutton 14
914	User-Programmable Pushbutton 15
915	User-Programmable Pushbutton 16
920	Disconnect switch 1
921	Disconnect switch 2
922	Disconnect switch 3
923	Disconnect switch 4
924	Disconnect switch 5
925	Disconnect switch 6
926	Disconnect switch 7
927	Disconnect switch 8
928	Disconnect switch 9
929	Disconnect switch 10
930	Disconnect switch 11
931	Disconnect switch 12
932	Disconnect switch 13
933	Disconnect switch 14
934	Disconnect switch 15
935	Disconnect switch 16
936	Disconnect switch 17
937	Disconnect switch 18
938	Disconnect switch 19
939	Disconnect switch 20
940	Disconnect switch 21
941	Disconnect switch 22
942	Disconnect switch 23
943	Disconnect switch 24
968	Breaker 1
969	Breaker 2
970	Breaker 3
971	Breaker 4

Bitmask	Element
972	Breaker 5
973	Breaker 6
974	Breaker 1
975	Breaker 2
976	Breaker 3
977	Breaker 4
978	Breaker 5
979	Breaker 6
980	Breaker restrike 1
981	Breaker restrike 2
982	Breaker restrike 3
1012	Thermal overload protection 1
1013	Thermal overload protection 2

F126
ENUMERATION: NO/YES CHOICE

0 = No, 1 = Yes

F127
ENUMERATION: LATCHED OR SELF-RESETTING

0 = Latched, 1 = Self-Reset

F128
ENUMERATION: CONTACT INPUT THRESHOLD

0 = 17 V DC, 1 = 33 V DC, 2 = 84 V DC, 3 = 166 V DC

F129
ENUMERATION: FLEXLOGIC TIMER TYPE

0 = millisecond, 1 = second, 2 = minute

F131
ENUMERATION: FORCED CONTACT OUTPUT STATE

0 = Disabled, 1 = Energized, 2 = De-energized, 3 = Freeze

F133
ENUMERATION: PROGRAM STATE

0 = Not Programmed, 1 = Programmed

F134
ENUMERATION: PASS/FAIL

0 = Fail, 1 = OK, 2 = n/a

F137
ENUMERATION: USER-PROGRAMMABLE PUSHBUTTON FUNCTION

0 = Disabled, 1 = Self-Reset, 2 = Latched

F141
ENUMERATION: SELF TEST ERRORS

Bitmask	Error
0	Any Self Tests
1	IRIG-B Failure
2	Port 1 Offline
3	Port 2 Offline
4	Port 3 Offline
5	Port 4 Offline
6	Port 5 Offline
7	Port 6 Offline
8	RRTD Communications Failure
9	Voltage Monitor
10	FlexLogic Error Token
11	Equipment Mismatch
12	Process Bus Failure
13	Unit Not Programmed
14	System Exception
15	Latching Output Discrepancy
17	Maintenance Alert 01
18	SNTP Failure
19	Maintenance Alert
20	Maintenance Alert
21	Maintenance Alert
22	Temperature Monitor
23	Process Bus Trouble
24	Brick Trouble
25	Field RTD Trouble
26	Field TDR Trouble
27	Remote Device Offline
28	Direct Device Offline
29	Maintenance Alert
30	Any Minor Error
31	Any Major Error
33	Maintenance Alert
64	Maintenance Alert
65	IEC 61850 Data Set
66	Aggregator Error
67	Unit Not Calibrated
68	Settings Save Error
69	SRAM Data Error
70	Program Memory
71	Watchdog Error
72	Low On Memory
73	Prototype Firmware
74	Module Failure 01
75	Module Failure 02
76	Module Failure 03
77	Module Failure 04
78	Module Failure 05
79	Module Failure 06
80	Module Failure 07

B

Bitmask	Error
81	Module Failure 08
82	Module Failure 09
83	Incompatible H/W
84	Module Failure 10
85	Module Failure 11
86	Module Failure 12
87	High ENET Traffic
89	Relay Restart
90	FGM Failure
91	FGM Failure
92	FGM Failure
93	FGM Failure
94	FGM Failure
95	FGM Error
96	Maintenance Alert
97	PHY Monitor
98	Storage Media Alarm
99	Wrong Transceiver
100	Power Supply Warning

F143
UR_UINT32: 32 BIT ERROR CODE (F141 specifies bit number)

A bit value of 0 = no error, 1 = error

F144
ENUMERATION: FORCED CONTACT INPUT STATE

0 = Disabled, 1 = Open, 2 = Closed

F146
ENUMERATION: MISCELLANEOUS EVENT CAUSES

Bitmask	Definition
0	Events Cleared
1	Oscillography Triggered
2	Date/time Changed
3	Default Settings Loaded
4	Test Mode Forcing On
5	Test Mode Forcing Off
6	Power On
7	Power Off
8	Relay In Service
9	Relay Out Of Service
10	Watchdog Reset
11	Oscillography Clear
12	Reboot Command
13	LED Test Initiated
14	Flash Programming
15	Fault Report Trigger
16	User Programmable Fault Report Trigger
17	---
18	Reload CT/VT module Settings

Bitmask	Definition
19	---
20	Ethernet Port 1 Offline
21	Ethernet Port 2 Offline
22	Ethernet Port 3 Offline
23	Ethernet Port 4 Offline
24	Ethernet Port 5 Offline
25	Ethernet Port 6 Offline
26	Test-Blocked Mode
27	Test Mode Test
28	Test Mode Disabled
29	Temperature Warning On
30	Temperature Warning Off
31	Unauthorized Access
32	System Integrity Recovery
33	System Integrity Recovery 06
34	System Integrity Recovery 07

F152
ENUMERATION: SETTING GROUP

0 = Active Group, 1 = Group 1, 2 = Group 2, 3 = Group 3
4 = Group 4, 5 = Group 5, 6 = Group 6

F155
ENUMERATION: REMOTE DEVICE STATE

0 = Offline, 1 = Online

F156
ENUMERATION: REMOTE INPUT BIT PAIRS

Bitmask	Value	Bitmask	Value
0	None	35	UserSt-3
1	DNA-1	36	UserSt-4
2	DNA-2	37	UserSt-5
3	DNA-3	38	UserSt-6
4	DNA-4	39	UserSt-7
5	DNA-5	40	UserSt-8
6	DNA-6	41	UserSt-9
7	DNA-7	42	UserSt-10
8	DNA-8	43	UserSt-11
9	DNA-9	44	UserSt-12
10	DNA-10	45	UserSt-13
11	DNA-11	46	UserSt-14
12	DNA-12	47	UserSt-15
13	DNA-13	48	UserSt-16
14	DNA-14	49	UserSt-17
15	DNA-15	50	UserSt-18
16	DNA-16	51	UserSt-19
17	DNA-17	52	UserSt-20
18	DNA-18	53	UserSt-21
19	DNA-19	54	UserSt-22
20	DNA-20	55	UserSt-23
21	DNA-21	56	UserSt-24

Bitmask	Value
22	DNA-22
23	DNA-23
24	DNA-24
25	DNA-25
26	DNA-26
27	DNA-27
28	DNA-28
29	DNA-29
30	DNA-30
31	DNA-31
32	DNA-32
33	UserSt-1
34	UserSt-2

Bitmask	Value
57	UserSt-25
58	UserSt-26
59	UserSt-27
60	UserSt-28
61	UserSt-29
62	UserSt-30
63	UserSt-31
64	UserSt-32
65	Dataset Item 1
66	Dataset Item 2
67	Dataset Item 3
↓	↓
96	Dataset Item 32

F157
ENUMERATION: BREAKER MODE

0 = 3-Pole, 1 = 1-Pole

F166
ENUMERATION: AUXILIARY VT CONNECTION TYPE

0 = Vn, 1 = Vag, 2 = Vbg, 3 = Vcg, 4 = Vab, 5 = Vbc, 6 = Vca

F167
ENUMERATION: SIGNAL SOURCE

0 = SRC 1, 1 = SRC 2, 2 = SRC 3, 3 = SRC 4,
4 = SRC 5, 5 = SRC 6

F172
ENUMERATION: SLOT LETTERS

Bitmask	Slot
0	F
1	G
2	H
3	J

Bitmask	Slot
4	K
5	L
6	M
7	N

Bitmask	Slot
8	P
9	R
10	S
11	T

Bitmask	Slot
12	U
13	V
14	W
15	X

F173
ENUMERATION: DCmA INPUT/OUTPUT RANGE

Bitmask	DCmA input/output range
0	0 to –1 mA
1	0 to 1 mA
2	–1 to 1 mA
3	0 to 5 mA
4	0 to 10 mA
5	0 to 20 mA
6	4 to 20 mA

F174
ENUMERATION: TRANSDUCER RTD INPUT TYPE

0 = 100 Ohm Platinum, 1 = 120 Ohm Nickel,
2 = 100 Ohm Nickel, 3 = 10 Ohm Copper

F177
ENUMERATION: COMMUNICATION PORT

0 = None, 1 = COM1-RS485 (not applicable to UR firmware 7.00),
2 = COM2-RS485, 3 = Front Panel-RS232, 4 = Network - TCP,
5 = Network - UDP

F179
ENUMERATION: NEGATIVE SEQUENCE DIRECTIONAL OVERCURRENT TYPE

0 = Neg Sequence, 1 = Zero Sequence

F183
ENUMERATION: AC INPUT WAVEFORMS

Bitmask	Definition
0	Off
1	8 samples/cycle
2	16 samples/cycle
3	32 samples/cycle
4	64 samples/cycle

F184
ENUMERATION: IEC GOOSE DATASET

Value	IEC 61850 dataset
0	Fixed
1	GooseIn 1
2	GooseIn 2
3	GooseIn 3
4	GooseIn 4
5	GooseIn 5
6	GooseIn 6
7	GooseIn 7
8	GooseIn 8
9	GooseIn 9
10	GooseIn 10
11	GooseIn 11
12	GooseIn 12
13	GooseIn 13
14	GooseIn 14
15	GooseIn 15
16	GooseIn 16

F186
ENUMERATION: MEASUREMENT MODE

0 = Phase to Ground, 1 = Phase to Phase

B

F190
ENUMERATION: SIMULATED KEYPRESS

Bitmask	Keypress
0	No key --- use between real keys
1	1
2	2
3	3
4	4
5	5
6	6
7	7
8	8
9	9
10	0
11	Decimal Point
12	Plus/Minus
13	Value Up
14	Value Down
15	Message Up
16	Message Down
17	Message Left
18	Message Right
19	Menu
20	Help
21	Escape
22	Enter
23	Reset
24	User 1
25	User 2
26	User 3
27	User-programmable key 1
28	User-programmable key 2
29	User-programmable key 3
30	User-programmable key 4
31	User-programmable key 5
32	User-programmable key 6
33	User-programmable key 7
34	User-programmable key 8
35	User-programmable key 9
36	User-programmable key 10
37	User-programmable key 11
38	User-programmable key 12
39	User 4 (control pushbutton)
40	User 5 (control pushbutton)
41	User 6 (control pushbutton)
42	User 7 (control pushbutton)
43	User-programmable key 13
44	User-programmable key 14
45	User-programmable key 15
46	User-programmable key 16

F192
ENUMERATION: ETHERNET OPERATION MODE

0 = Half-Duplex, 1 = Full-Duplex

F194
ENUMERATION: DNP SCALE

0 = 0.01, 1 = 0.1, 2 = 1, 3 = 10, 4 = 100, 5 = 1000, 6 = 10000, 7 = 100000, 8 = 0.001

F196
ENUMERATION: NEUTRAL DIRECTIONAL OVERCURRENT OPERATING CURRENT

0 = Calculated 3I0, 1 = Measured IG

F200
TEXT40: 40-CHARACTER ASCII TEXT

20 registers, 16 Bits: 1st Char MSB, 2nd Char LSB

F202
TEXT20: 20-CHARACTER ASCII TEXT

10 registers, 16 Bits: 1st Char MSB, 2nd Char LSB

F203
TEXT16: 16-CHARACTER ASCII TEXT

F204
TEXT80: 80-CHARACTER ASCII TEXT

F205
TEXT12: 12-CHARACTER ASCII TEXT

F206
TEXT6: 6-CHARACTER ASCII TEXT

F207
TEXT4: 4-CHARACTER ASCII TEXT

F209
TEXT65: 65-CHARACTER ASCII TEXT

F211
ENUMERATION: SOURCE SELECTION

0 = None, 1 = SRC 1, 2 = SRC 2, 3 = SRC 3, 4 = SRC 4, 5 = SRC 5, 6 = SRC 6

F213
TEXT32: 32-CHARACTER ASCII TEXT

F220
ENUMERATION: PUSHBUTTON MESSAGE PRIORITY

Value	Priority
0	Disabled
1	Normal
2	High Priority

F230
ENUMERATION: DIRECTIONAL POLARIZING

0 = Voltage, 1 = Current, 2 = Dual, 3 = Dual-V, 4 = Dual-I

F231
ENUMERATION: POLARIZING VOLTAGE

0 = Calculated V0, 1 = Measured VX

F232
ENUMERATION: CONFIGURABLE GOOSE Tx DATASET ITEMS

Value	IEC 61850 Tx dataset item
0	None
1	GGIO1.ST.Ind1.q
2	GGIO1.ST.Ind1.stVal

Value	IEC 61850 Tx dataset item
3	GGIO1.ST.Ind2.q
4	GGIO1.ST.Ind2.stVal
↓	↓
255	GGIO1.ST.Ind128.q
256	GGIO1.ST.Ind128.stVal
257	MMXU1.MX.TotW.mag.f
258	MMXU1.MX.TotVAr.mag.f
259	MMXU1.MX.TotVA.mag.f
260	MMXU1.MX.TotPF.mag.f
261	MMXU1.MX.Hz.mag.f
262	MMXU1.MX.PPV.phsAB.cVal.mag.f
263	MMXU1.MX.PPV.phsAB.cVal.ang.f
264	MMXU1.MX.PPV.phsBC.cVal.mag.f
265	MMXU1.MX.PPV.phsBC.cVal.ang.f
266	MMXU1.MX.PPV.phsCA.cVal.mag.f
267	MMXU1.MX.PPV.phsCA.cVal.ang.f
268	MMXU1.MX.PhV.phsA.cVal.mag.f
269	MMXU1.MX.PhV.phsA.cVal.ang.f
270	MMXU1.MX.PhV.phsB.cVal.mag.f
271	MMXU1.MX.PhV.phsB.cVal.ang.f
272	MMXU1.MX.PhV.phsC.cVal.mag.f
273	MMXU1.MX.PhV.phsC.cVal.ang.f
274	MMXU1.MX.A.phsA.cVal.mag.f
275	MMXU1.MX.A.phsA.cVal.ang.f
276	MMXU1.MX.A.phsB.cVal.mag.f
277	MMXU1.MX.A.phsB.cVal.ang.f
278	MMXU1.MX.A.phsC.cVal.mag.f
279	MMXU1.MX.A.phsC.cVal.ang.f
280	MMXU1.MX.A.neut.cVal.mag.f
281	MMXU1.MX.A.neut.cVal.ang.f
282	MMXU1.MX.W.phsA.cVal.mag.f
283	MMXU1.MX.W.phsB.cVal.mag.f
284	MMXU1.MX.W.phsC.cVal.mag.f
285	MMXU1.MX.VAr.phsA.cVal.mag.f
286	MMXU1.MX.VAr.phsB.cVal.mag.f
287	MMXU1.MX.VAr.phsC.cVal.mag.f
288	MMXU1.MX.VA.phsA.cVal.mag.f
289	MMXU1.MX.VA.phsB.cVal.mag.f
290	MMXU1.MX.VA.phsC.cVal.mag.f
291	MMXU1.MX.PF.phsA.cVal.mag.f
292	MMXU1.MX.PF.phsB.cVal.mag.f
293	MMXU1.MX.PF.phsC.cVal.mag.f
294	MMXU2.MX.TotW.mag.f
295	MMXU2.MX.TotVAr.mag.f
296	MMXU2.MX.TotVA.mag.f
297	MMXU2.MX.TotPF.mag.f
298	MMXU2.MX.Hz.mag.f
299	MMXU2.MX.PPV.phsAB.cVal.mag.f
300	MMXU2.MX.PPV.phsAB.cVal.ang.f
301	MMXU2.MX.PPV.phsBC.cVal.mag.f
302	MMXU2.MX.PPV.phsBC.cVal.ang.f
303	MMXU2.MX.PPV.phsCA.cVal.mag.f
304	MMXU2.MX.PPV.phsCA.cVal.ang.f

Value	IEC 61850 Tx dataset item
305	MMXU2.MX.PhV.phsA.cVal.mag.f
306	MMXU2.MX.PhV.phsA.cVal.ang.f
307	MMXU2.MX.PhV.phsB.cVal.mag.f
308	MMXU2.MX.PhV.phsB.cVal.ang.f
309	MMXU2.MX.PhV.phsC.cVal.mag.f
310	MMXU2.MX.PhV.phsC.cVal.ang.f
311	MMXU2.MX.A.phsA.cVal.mag.f
312	MMXU2.MX.A.phsA.cVal.ang.f
313	MMXU2.MX.A.phsB.cVal.mag.f
314	MMXU2.MX.A.phsB.cVal.ang.f
315	MMXU2.MX.A.phsC.cVal.mag.f
316	MMXU2.MX.A.phsC.cVal.ang.f
317	MMXU2.MX.A.neut.cVal.mag.f
318	MMXU2.MX.A.neut.cVal.ang.f
319	MMXU2.MX.W.phsA.cVal.mag.f
320	MMXU2.MX.W.phsB.cVal.mag.f
321	MMXU2.MX.W.phsC.cVal.mag.f
322	MMXU2.MX.VAr.phsA.cVal.mag.f
323	MMXU2.MX.VAr.phsB.cVal.mag.f
324	MMXU2.MX.VAr.phsC.cVal.mag.f
325	MMXU2.MX.VA.phsA.cVal.mag.f
326	MMXU2.MX.VA.phsB.cVal.mag.f
327	MMXU2.MX.VA.phsC.cVal.mag.f
328	MMXU2.MX.PF.phsA.cVal.mag.f
329	MMXU2.MX.PF.phsB.cVal.mag.f
330	MMXU2.MX.PF.phsC.cVal.mag.f
331	MMXU3.MX.TotW.mag.f
332	MMXU3.MX.TotVAr.mag.f
333	MMXU3.MX.TotVA.mag.f
334	MMXU3.MX.TotPF.mag.f
335	MMXU3.MX.Hz.mag.f
336	MMXU3.MX.PPV.phsAB.cVal.mag.f
337	MMXU3.MX.PPV.phsAB.cVal.ang.f
338	MMXU3.MX.PPV.phsBC.cVal.mag.f
339	MMXU3.MX.PPV.phsBC.cVal.ang.f
340	MMXU3.MX.PPV.phsCA.cVal.mag.f
341	MMXU3.MX.PPV.phsCA.cVal.ang.f
342	MMXU3.MX.PhV.phsA.cVal.mag.f
343	MMXU3.MX.PhV.phsA.cVal.ang.f
344	MMXU3.MX.PhV.phsB.cVal.mag.f
345	MMXU3.MX.PhV.phsB.cVal.ang.f
346	MMXU3.MX.PhV.phsC.cVal.mag.f
347	MMXU3.MX.PhV.phsC.cVal.ang.f
348	MMXU3.MX.A.phsA.cVal.mag.f
349	MMXU3.MX.A.phsA.cVal.ang.f
350	MMXU3.MX.A.phsB.cVal.mag.f
351	MMXU3.MX.A.phsB.cVal.ang.f
352	MMXU3.MX.A.phsC.cVal.mag.f
353	MMXU3.MX.A.phsC.cVal.ang.f
354	MMXU3.MX.A.neut.cVal.mag.f
355	MMXU3.MX.A.neut.cVal.ang.f
356	MMXU3.MX.W.phsA.cVal.mag.f
357	MMXU3.MX.W.phsB.cVal.mag.f

Value	IEC 61850 Tx dataset item
358	MMXU3.MX.W.phsC.cVal.mag.f
359	MMXU3.MX.VAr.phsA.cVal.mag.f
360	MMXU3.MX.VAr.phsB.cVal.mag.f
361	MMXU3.MX.VAr.phsC.cVal.mag.f
362	MMXU3.MX.VA.phsA.cVal.mag.f
363	MMXU3.MX.VA.phsB.cVal.mag.f
364	MMXU3.MX.VA.phsC.cVal.mag.f
365	MMXU3.MX.PF.phsA.cVal.mag.f
366	MMXU3.MX.PF.phsB.cVal.mag.f
367	MMXU3.MX.PF.phsC.cVal.mag.f
368	MMXU4.MX.TotW.mag.f
369	MMXU4.MX.TotVAr.mag.f
370	MMXU4.MX.TotVA.mag.f
371	MMXU4.MX.TotPF.mag.f
372	MMXU4.MX.Hz.mag.f
373	MMXU4.MX.PPV.phsAB.cVal.mag.f
374	MMXU4.MX.PPV.phsAB.cVal.ang.f
375	MMXU4.MX.PPV.phsBC.cVal.mag.f
376	MMXU4.MX.PPV.phsBC.cVal.ang.f
377	MMXU4.MX.PPV.phsCA.cVal.mag.f
378	MMXU4.MX.PPV.phsCA.cVal.ang.f
379	MMXU4.MX.PhV.phsA.cVal.mag.f
380	MMXU4.MX.PhV.phsA.cVal.ang.f
381	MMXU4.MX.PhV.phsB.cVal.mag.f
382	MMXU4.MX.PhV.phsB.cVal.ang.f
383	MMXU4.MX.PhV.phsC.cVal.mag.f
384	MMXU4.MX.PhV.phsC.cVal.ang.f
385	MMXU4.MX.A.phsA.cVal.mag.f
386	MMXU4.MX.A.phsA.cVal.ang.f
387	MMXU4.MX.A.phsB.cVal.mag.f
388	MMXU4.MX.A.phsB.cVal.ang.f
389	MMXU4.MX.A.phsC.cVal.mag.f
390	MMXU4.MX.A.phsC.cVal.ang.f
391	MMXU4.MX.A.neut.cVal.mag.f
392	MMXU4.MX.A.neut.cVal.ang.f
393	MMXU4.MX.W.phsA.cVal.mag.f
394	MMXU4.MX.W.phsB.cVal.mag.f
395	MMXU4.MX.W.phsC.cVal.mag.f
396	MMXU4.MX.VAr.phsA.cVal.mag.f
397	MMXU4.MX.VAr.phsB.cVal.mag.f
398	MMXU4.MX.VAr.phsC.cVal.mag.f
399	MMXU4.MX.VA.phsA.cVal.mag.f
400	MMXU4.MX.VA.phsB.cVal.mag.f
401	MMXU4.MX.VA.phsC.cVal.mag.f
402	MMXU4.MX.PF.phsA.cVal.mag.f
403	MMXU4.MX.PF.phsB.cVal.mag.f
404	MMXU4.MX.PF.phsC.cVal.mag.f
405	MMXU5.MX.TotW.mag.f
406	MMXU5.MX.TotVAr.mag.f
407	MMXU5.MX.TotVA.mag.f
408	MMXU5.MX.TotPF.mag.f
409	MMXU5.MX.Hz.mag.f
410	MMXU5.MX.PPV.phsAB.cVal.mag.f

Value	IEC 61850 Tx dataset item
411	MMXU5.MX.PPV.phsAB.cVal.ang.f
412	MMXU5.MX.PPV.phsBC.cVal.mag.f
413	MMXU5.MX.PPV.phsBC.cVal.ang.f
414	MMXU5.MX.PPV.phsCA.cVal.mag.f
415	MMXU5.MX.PPV.phsCA.cVal.ang.f
416	MMXU5.MX.PhV.phsA.cVal.mag.f
417	MMXU5.MX.PhV.phsA.cVal.ang.f
418	MMXU5.MX.PhV.phsB.cVal.mag.f
419	MMXU5.MX.PhV.phsB.cVal.ang.f
420	MMXU5.MX.PhV.phsC.cVal.mag.f
421	MMXU5.MX.PhV.phsC.cVal.ang.f
422	MMXU5.MX.A.phsA.cVal.mag.f
423	MMXU5.MX.A.phsA.cVal.ang.f
424	MMXU5.MX.A.phsB.cVal.mag.f
425	MMXU5.MX.A.phsB.cVal.ang.f
426	MMXU5.MX.A.phsC.cVal.mag.f
427	MMXU5.MX.A.phsC.cVal.ang.f
428	MMXU5.MX.A.neut.cVal.mag.f
429	MMXU5.MX.A.neut.cVal.ang.f
430	MMXU5.MX.W.phsA.cVal.mag.f
431	MMXU5.MX.W.phsB.cVal.mag.f
432	MMXU5.MX.W.phsC.cVal.mag.f
433	MMXU5.MX.VAr.phsA.cVal.mag.f
434	MMXU5.MX.VAr.phsB.cVal.mag.f
435	MMXU5.MX.VAr.phsC.cVal.mag.f
436	MMXU5.MX.VA.phsA.cVal.mag.f
437	MMXU5.MX.VA.phsB.cVal.mag.f
438	MMXU5.MX.VA.phsC.cVal.mag.f
439	MMXU5.MX.PF.phsA.cVal.mag.f
440	MMXU5.MX.PF.phsB.cVal.mag.f
441	MMXU5.MX.PF.phsC.cVal.mag.f
442	MMXU6.MX.TotW.mag.f
443	MMXU6.MX.TotVAr.mag.f
444	MMXU6.MX.TotVA.mag.f
445	MMXU6.MX.TotPF.mag.f
446	MMXU6.MX.Hz.mag.f
447	MMXU6.MX.PPV.phsAB.cVal.mag.f
448	MMXU6.MX.PPV.phsAB.cVal.ang.f
449	MMXU6.MX.PPV.phsBC.cVal.mag.f
450	MMXU6.MX.PPV.phsBC.cVal.ang.f
451	MMXU6.MX.PPV.phsCA.cVal.mag.f
452	MMXU6.MX.PPV.phsCA.cVal.ang.f
453	MMXU6.MX.PhV.phsA.cVal.mag.f
454	MMXU6.MX.PhV.phsA.cVal.ang.f
455	MMXU6.MX.PhV.phsB.cVal.mag.f
456	MMXU6.MX.PhV.phsB.cVal.ang.f
457	MMXU6.MX.PhV.phsC.cVal.mag.f
458	MMXU6.MX.PhV.phsC.cVal.ang.f
459	MMXU6.MX.A.phsA.cVal.mag.f
460	MMXU6.MX.A.phsA.cVal.ang.f
461	MMXU6.MX.A.phsB.cVal.mag.f
462	MMXU6.MX.A.phsB.cVal.ang.f
463	MMXU6.MX.A.phsC.cVal.mag.f

Value	IEC 61850 Tx dataset item
464	MMXU6.MX.A.phsC.cVal.ang.f
465	MMXU6.MX.A.neut.cVal.mag.f
466	MMXU6.MX.A.neut.cVal.ang.f
467	MMXU6.MX.W.phsA.cVal.mag.f
468	MMXU6.MX.W.phsB.cVal.mag.f
469	MMXU6.MX.W.phsC.cVal.mag.f
470	MMXU6.MX.VAr.phsA.cVal.mag.f
471	MMXU6.MX.VAr.phsB.cVal.mag.f
472	MMXU6.MX.VAr.phsC.cVal.mag.f
473	MMXU6.MX.VA.phsA.cVal.mag.f
474	MMXU6.MX.VA.phsB.cVal.mag.f
475	MMXU6.MX.VA.phsC.cVal.mag.f
476	MMXU6.MX.PF.phsA.cVal.mag.f
477	MMXU6.MX.PF.phsB.cVal.mag.f
478	MMXU6.MX.PF.phsC.cVal.mag.f
479	GGIO4.MX.AnIn1.mag.f
480	GGIO4.MX.AnIn2.mag.f
481	GGIO4.MX.AnIn3.mag.f
482	GGIO4.MX.AnIn4.mag.f
483	GGIO4.MX.AnIn5.mag.f
484	GGIO4.MX.AnIn6.mag.f
485	GGIO4.MX.AnIn7.mag.f
486	GGIO4.MX.AnIn8.mag.f
487	GGIO4.MX.AnIn9.mag.f
488	GGIO4.MX.AnIn10.mag.f
489	GGIO4.MX.AnIn11.mag.f
490	GGIO4.MX.AnIn12.mag.f
491	GGIO4.MX.AnIn13.mag.f
492	GGIO4.MX.AnIn14.mag.f
493	GGIO4.MX.AnIn15.mag.f
494	GGIO4.MX.AnIn16.mag.f
495	GGIO4.MX.AnIn17.mag.f
496	GGIO4.MX.AnIn18.mag.f
497	GGIO4.MX.AnIn19.mag.f
498	GGIO4.MX.AnIn20.mag.f
499	GGIO4.MX.AnIn21.mag.f
500	GGIO4.MX.AnIn22.mag.f
501	GGIO4.MX.AnIn23.mag.f
502	GGIO4.MX.AnIn24.mag.f
503	GGIO4.MX.AnIn25.mag.f
504	GGIO4.MX.AnIn26.mag.f
505	GGIO4.MX.AnIn27.mag.f
506	GGIO4.MX.AnIn28.mag.f
507	GGIO4.MX.AnIn29.mag.f
508	GGIO4.MX.AnIn30.mag.f
509	GGIO4.MX.AnIn31.mag.f
510	GGIO4.MX.AnIn32.mag.f
511	GGIO5.ST.UIntIn1.q
512	GGIO5.ST.UIntIn1.stVal
513	GGIO5.ST.UIntIn2.q
514	GGIO5.ST.UIntIn2.stVal
515	GGIO5.ST.UIntIn3.q
516	GGIO5.ST.UIntIn3.stVal
517	GGIO5.ST.UIntIn4.q
518	GGIO5.ST.UIntIn4.stVal
519	GGIO5.ST.UIntIn5.q
520	GGIO5.ST.UIntIn5.stVal
521	GGIO5.ST.UIntIn6.q
522	GGIO5.ST.UIntIn6.stVal
523	GGIO5.ST.UIntIn7.q
524	GGIO5.ST.UIntIn7.stVal
525	GGIO5.ST.UIntIn8.q
526	GGIO5.ST.UIntIn8.stVal
527	GGIO5.ST.UIntIn9.q
528	GGIO5.ST.UIntIn9.stVal
529	GGIO5.ST.UIntIn10.q
530	GGIO5.ST.UIntIn10.stVal
531	GGIO5.ST.UIntIn11.q
532	GGIO5.ST.UIntIn11.stVal
533	GGIO5.ST.UIntIn12.q
534	GGIO5.ST.UIntIn12.stVal
535	GGIO5.ST.UIntIn13.q
536	GGIO5.ST.UIntIn13.stVal
537	GGIO5.ST.UIntIn14.q
538	GGIO5.ST.UIntIn14.stVal
539	GGIO5.ST.UIntIn15.q
540	GGIO5.ST.UIntIn15.stVal
541	GGIO5.ST.UIntIn16.q
542	GGIO5.ST.UIntIn16.stVal

F233
ENUMERATION: CONFIGURABLE GOOSE Rx DATASET ITEMS

Value	IEC 61850 GOOSE Rx dataset item
0	None
1	GGIO3.ST.Ind1.q
2	GGIO3.ST.Ind1.stVal
3	GGIO3.ST.Ind2.q
4	GGIO3.ST.Ind2.stVal
↓	↓
127	GGIO3.ST.Ind64q
128	GGIO3.ST.Ind64.stVal
129	GGIO3.MX.AnIn1.mag.f
130	GGIO3.MX.AnIn2.mag.f
131	GGIO3.MX.AnIn3.mag.f
132	GGIO3.MX.AnIn4.mag.f
133	GGIO3.MX.AnIn5.mag.f
134	GGIO3.MX.AnIn6.mag.f
135	GGIO3.MX.AnIn7.mag.f
136	GGIO3.MX.AnIn8.mag.f
137	GGIO3.MX.AnIn9.mag.f
138	GGIO3.MX.AnIn10.mag.f
139	GGIO3.MX.AnIn11.mag.f
140	GGIO3.MX.AnIn12.mag.f

Value	IEC 61850 GOOSE Rx dataset item
141	GGIO3.MX.AnIn13.mag.f
142	GGIO3.MX.AnIn14.mag.f
143	GGIO3.MX.AnIn15.mag.f
144	GGIO3.MX.AnIn16.mag.f
145	GGIO3.MX.AnIn17.mag.f
146	GGIO3.MX.AnIn18.mag.f
147	GGIO3.MX.AnIn19.mag.f
148	GGIO3.MX.AnIn20.mag.f
149	GGIO3.MX.AnIn21.mag.f
150	GGIO3.MX.AnIn22.mag.f
151	GGIO3.MX.AnIn23.mag.f
152	GGIO3.MX.AnIn24.mag.f
153	GGIO3.MX.AnIn25.mag.f
154	GGIO3.MX.AnIn26.mag.f
155	GGIO3.MX.AnIn27.mag.f
156	GGIO3.MX.AnIn28.mag.f
157	GGIO3.MX.AnIn29.mag.f
158	GGIO3.MX.AnIn30.mag.f
159	GGIO3.MX.AnIn31.mag.f
160	GGIO3.MX.AnIn32.mag.f
161	GGIO3.ST.IndPos1.stVal
162	GGIO3.ST.IndPos2.stVal
163	GGIO3.ST.IndPos3.stVal
164	GGIO3.ST.IndPos4.stVal
165	GGIO3.ST.IndPos5.stVal
166	GGIO3.ST.UIntIn1.q
167	GGIO3.ST.UIntIn1.stVal
168	GGIO3.ST.UIntIn2.q
169	GGIO3.ST.UIntIn2.stVal
170	GGIO3.ST.UIntIn3.q
171	GGIO3.ST.UIntIn3.stVal
172	GGIO3.ST.UIntIn4.q
173	GGIO3.ST.UIntIn4.stVal
174	GGIO3.ST.UIntIn5.q
175	GGIO3.ST.UIntIn5.stVal
176	GGIO3.ST.UIntIn6.q
177	GGIO3.ST.UIntIn6.stVal
178	GGIO3.ST.UIntIn7.q
179	GGIO3.ST.UIntIn7.stVal
180	GGIO3.ST.UIntIn8.q
181	GGIO3.ST.UIntIn8.stVal
182	GGIO3.ST.UIntIn9.q
183	GGIO3.ST.UIntIn9.stVal
184	GGIO3.ST.UIntIn10.q
185	GGIO3.ST.UIntIn10.stVal
186	GGIO3.ST.UIntIn11.q
187	GGIO3.ST.UIntIn11.stVal
188	GGIO3.ST.UIntIn12.q
189	GGIO3.ST.UIntIn12.stVal
190	GGIO3.ST.UIntIn13.q
191	GGIO3.ST.UIntIn13.stVal
192	GGIO3.ST.UIntIn14.q
193	GGIO3.ST.UIntIn14.stVal
194	GGIO3.ST.UIntIn15.q
195	GGIO3.ST.UIntIn15.stVal
196	GGIO3.ST.UIntIn16.q
197	GGIO3.ST.UIntIn16.stVal

F237
ENUMERATION: REAL TIME CLOCK MONTH (FOR EXAMPLE, DAYLIGHT SAVINGS TIME)

Value	Month
0	January
1	February
2	March
3	April
4	May
5	June
6	July
7	August
8	September
9	October
10	November
11	December

F238
ENUMERATION: REAL TIME CLOCK DAY (FOR EXAMPLE, DAYLIGHT SAVINGS TIME)

Value	Day
0	Sunday
1	Monday
2	Tuesday
3	Wednesday
4	Thursday
5	Friday
6	Saturday

F239
ENUMERATION: REAL TIME CLOCK DAYLIGHT SAVINGS TIME START DAY INSTANCE

Value	Instance
0	First
1	Second
2	Third
3	Fourth
4	Last

F241
ENUMERATION: NEUTRAL VOLTAGE UNBALANCE BUS 3V0

0 = Calculated, 1 = Measured

F243
ENUMERATION: FIELD UNIT TYPE

0 = CC-05, 1 = CV-05, 2 = CC-01, 3 = CV-01

F244
ENUMERATION: FIELD UNIT PROCESS CARD PORT

0 = H4a, 1 = H4b, 2 = H3a, 3 = H3b, 4 = H2a, 5 = H2b, 6 = H1a, 7 = H1b

F245
ENUMERATION: TEST MODE FUNCTION

Value	Instance
0	Disabled
1	Isolated
2	Forcible

F246
ENUMERATION: BRICK TRANSDUCER RANGE

Value	Description
0	-5...5V
1	-1...1mA
2	0...1mA
3	0...-1mA
4	0...5mA
5	0...10mA
6	0...20mA
7	4...20mA
8	potentiometer
9	tap position

F247
ENUMERATION: BRICK AC BANK ORIGIN

Value	Description
0	None
1	U1/AC1..3
2	U1/AC5..7
3	U2/AC1..3
4	U2/AC5..7
5	U3/AC1..3
6	U3/AC5..7
7	U4/AC1..3
8	U4/AC5..7
9	U5/AC1..3
10	U5/AC5..7
11	U6/AC1..3
12	U6/AC5..7
13	U7/AC1..3
14	U7/AC5..7
15	U8/AC1..3
16	U8/AC5..7

F248
ENUMERATION: BRICK AUX BANK ORIGIN

Value	Description
0	None
1	U1/AC4
2	U1/AC8
3	U2/AC4
4	U2/AC8
5	U3/AC4
6	U3/AC8
7	U4/AC4
8	U4/AC8
9	U5/AC4
10	U5/AC8
11	U6/AC4
12	U6/AC8
13	U7/AC5
14	U7/AC8
15	U8/AC5
16	U8/AC8

F253
ENUMERATION: BRICK TRANSDUCER ORIGIN

Value	Description
0	None
1	U1/DC1
2	U1/DC2
3	U1/DC3
4	U2/DC1
5	U2/DC2
6	U2/DC3
...	...
24	U8/DC3

F255
ENUMERATION: CAPACITOR BANK GROUNDING

Value	Description
0	VT (ungrounded)
1	CTxR (grounded)

F256
ENUMERATION: BRICK ORIGIN/DESTINATION

Value	Description
0	None
1	U1
2	U2

Value	Description
3	U3
4	U4
5	U5
6	U6
7	U7
8	U8

F259
ENUMERATION: BRICK RTD TYPE

0 = 100 Ohm Nickel, 1 = 120 Ohm Nickel, 2 = 100 Ohm Platinum

F260
ENUMERATION: DATA LOGGER MODE

0 = Continuous, 1 = Trigger

F261
ENUMERATION: BANK REDUNDANCY TYPE

0 = None, 1 = Dependability Biased, 2 = Security Biased

F262
ENUMERATION: BRICK STATUS

0 = Disabled, 1 = OK, 2 = Communications Trouble, 3 = Equipment Mismatch, 4 = Brick Trouble

F300
UR_UINT32: FLEXLOGIC BASE TYPE (15-bit type)

The FlexLogic BASE type is 7 bits and is combined with a 8-bit descriptor and 1 bit for the protection element to form a 16-bit value. The combined bits are of the form: PTTTTTTTDDDDDDDD, where P bit if set indicates that the FlexLogic type is associated with a protection element state and D represents bits for the type in F124 format. If P bit is not set, then the T represents bits for the type and D represents range.

The values in square brackets indicate the base type with P prefix [PTTTTTTT] and the values in round brackets indicate the descriptor range. The left-most D bit indicates whether the type is an ON or OFF type. There can be a total 64 type elements. There can be a total of 256 descriptors of each type.

[0] Off (0) – This is boolean FALSE value
[1] On (1) – This is boolean TRUE value
[2] CONTACT INPUTS (1 to 96)
[3] CONTACT INPUTS OFF (1 to 96)
[4] VIRTUAL INPUTS (1 to 32)
[6] VIRTUAL OUTPUTS (1 to 64)
[8] CONTACT OUTPUTS
[10] CONTACT OUTPUTS VOLTAGE DETECTED (1 to 64)
[11] CONTACT OUTPUTS VOLTAGE OFF DETECTED (1 to 64)
[12] CONTACT OUTPUTS CURRENT DETECTED (1 to 64)
[13] CONTACT OUTPUTS CURRENT OFF DETECTED (1 to 64)
[14] REMOTE INPUTS (1 to 32)
[16] DIRECT INPUTS (1 to 96
[18] REMOTE OUTPUT DNA BIT PAIRS (1 to 32)
[20] REMOTE OUTPUT UserSt BIT PAIRS (1 to 32)
[22] REMOTE DEVICE ONLINE (1 to 16)
[24] MISCELLANEOUS EQUATION
[26] TELEPROTECTION INPUTS
[28] INSERT (via keypad only)
[30] DELETE (via keypad only)
[32] END
[34] NOT (1 INPUT)
[36] 2 INPUT XOR (0)
[38] LATCH SET/RESET (2 inputs)
[40] OR (2 to 16 inputs)
[42] AND (2 to 16 inputs)
[44] NOR (2 to 16 inputs)
[46] NAND (2 to 16 inputs)
[48] TIMER (1 to 32)
[50] ASSIGN VIRTUAL OUTPUT (1 to 64)
[52] ONE SHOT
[54] SELF-TEST ERROR (see F141 for range)
[56] PLATFORM DIRECT INPUT (1 to 96)
[58] PLATFORM DIRECT OUTPUT (1 to 96)
[60] PLATFORM DIRECT DEVICE (1 to 8)
[62] MISCELLANEOUS EVENTS (see F146 for range)
[64] PDC NETWORK CONTROL
[66] PMU RECORDER OUT OF MEMORY
[68] PMU RECORDER STOPPED
[128 to 255] ELEMENT STATES (see the Element States section in the Modbus memory map)

F400
UR_UINT16: CT/VT BANK SELECTION

Bitmask	Bank selection
0	Card 1 Contact 1 to 4
1	Card 1 Contact 5 to 8
2	Card 2 Contact 1 to 4
3	Card 2 Contact 5 to 8
4	Card 3 Contact 1 to 4
5	Card 3 Contact 5 to 8

F491
ENUMERATION: ANALOG INPUT MODE

0 = Default Value, 1 = Last Known

F500
UR_UINT16: PACKED BITFIELD

First register indicates input/output state with bits 0 (MSB) to 15 (LSB) corresponding to input/output state 1 to 16. The second register indicates input/output state with bits 0 to 15 corresponding to input/output state 17 to 32 (if required). The third register indicates input/output state with bits 0 to 15 corresponding to input/output state 33 to 48 (if required). The fourth register indicates input/output state with bits 0 to 15 corresponding to input/output state 49 to 64 (if required).

The number of registers required is determined by the specific data item. A bit value of 0 = Off and 1 = On.

F501
UR_UINT16: LED STATUS

Low byte of register indicates LED status with bit 0 representing the top LED and bit 7 the bottom LED. A bit value of 1 indicates the LED is on, 0 indicates the LED is off.

0 = Off, 1 = On

F502
BITFIELD: ELEMENT OPERATE STATES

Each bit contains the operate state for an element. See the F124 format code for a list of element IDs. The operate bit for element ID X is bit [X mod 16] in register [X/16].

F515
ENUMERATION ELEMENT INPUT MODE

0 = Signed, 1 = Absolute

F516
ENUMERATION ELEMENT COMPARE MODE

0 = Level, 1 = Delta

F517
ENUMERATION: ELEMENT DIRECTION OPERATION

0 = Over, 1 = Under

F518
ENUMERATION: FLEXELEMENT UNITS

0 = Milliseconds, 1 = Seconds, 2 = Minutes

F519
ENUMERATION: NON-VOLATILE LATCH

0 = Reset-Dominant, 1 = Set-Dominant

F522
ENUMERATION: TRANSDUCER DCmA OUTPUT RANGE

0 = –1 to 1 mA, 1 = 0 to 1 mA, 2 = 4 to 20 mA

F523
ENUMERATION: DNP OBJECTS 20, 22, AND 23 DEFAULT VARIATION

Bitmask	Default variation
0	1
1	2
2	5
3	6

F524
ENUMERATION: DNP OBJECT 21 DEFAULT VARIATION

Bitmask	Default variation
0	1
1	2
2	9
3	10

F525
ENUMERATION: DNP OBJECT 32 DEFAULT VARIATION

Bitmask	Default variation
0	1
1	2
2	3
3	4
4	5
5	7

F530
ENUMERATION: FRONT PANEL INTERFACE KEYPRESS

Value	Keypress	Value	Keypress	Value	Keypress
0	None	15	3	33	User PB 3
1	Menu	16	Enter	34	User PB 4
2	Message Up	17	Message Down	35	User PB 5
3	7	18	0	36	User PB 6
4	8	19	Decimal	37	User PB 7
5	9	20	+/–	38	User PB 8
6	Help	21	Value Up	39	User PB 9
7	Message Left	22	Value Down	40	User PB 10
8	4	23	Reset	41	User PB 11
9	5	24	User 1	42	User PB 12
10	6	25	User 2	44	User 4
11	Escape	26	User 3	45	User 5
12	Message Right	31	User PB 1	46	User 6
13	1	32	User PB 2	47	User 7
14	2				

F531
ENUMERATION: LANGUAGE

0 = English, 1 = French, 2 = Chinese, 3 = Russian, 4 = Turkish, 5 = German

F535
ENUMERATION: AUTOMATIC VOLTAGE REGULATOR OPERATING SIGNAL

0 = Vab, 1 = Vbc, 2 = Vca, 3 = Vaver, 4 = V1, 5 = Vaux, 6 = Vag, 7 = Vbg, 8 = Vcg

B

F536
ENUMERATION: AUTOMATIC VOLTAGE REGULATOR CONTROL MODE

0 = Voltage, 1 = VAR

F537
ENUMERATION: AUTOMATIC VOLTAGE REGULATOR VAR OPEN MODE

0 = Minimize uptime, 1 = Minimize number of operations

F600
UR_UINT16: FLEXANALOG PARAMETER

Corresponds to the Modbus address of the value used when this parameter is selected. Only certain values can be used as FlexAnalogs (basically all metering quantities used in protection).

F601
ENUMERATION: COM2 PORT USAGE

Enumeration	COM2 port usage
0	RS485
1	RRTD
2	GPM-F
3	RRTD and GPM-F

F605
ENUMERATION: REMOTE DOUBLE-POINT STATUS INPUT STATUS

Enumeration	Remote DPS input status
0	Intermediate
1	Off
2	On
3	Bad

F606
ENUMERATION: REMOTE DOUBLE-POINT STATUS INPUT

Enumeration	Remote double-point status input
0	None
1	Remote input 1
2	Remote input 2
3	Remote input 3
↓	↓
64	Remote input 64

F611
ENUMERATION: GOOSE RETRANSMISSION CURVE

Enumeration	Configurable GOOSE retransmission scheme
0	Heartbeat
1	Aggressive
2	Medium
3	Relaxed

F612
UR_UINT16: FLEXINTEGER PARAMETER

This 16-bit value corresponds to the Modbus address of the selected FlexInteger parameter. Only certain values can be used as FlexIntegers. There is no operation executed even though they are called FlexIntegers.

F615
ENUMERATION: IEC 61850 REPORT DATASET ITEMS

Enumeration	IEC 61850 report dataset items
0	None
1	PDIF1.ST.Str.general
2	PDIF1.ST.Op.general
3	PDIF2.ST.Str.general
4	PDIF2.ST.Op.general
5	PDIF3.ST.Str.general
6	PDIF3.ST.Op.general
7	PDIF4.ST.Str.general
8	PDIF4.ST.Op.general
9	PDIS1.ST.Str.general
10	PDIS1.ST.Op.general
11	PDIS2.ST.Str.general
12	PDIS2.ST.Op.general
13	PDIS3.ST.Str.general
14	PDIS3.ST.Op.general
15	PDIS4.ST.Str.general
16	PDIS4.ST.Op.general
17	PDIS5.ST.Str.general
18	PDIS5.ST.Op.general
19	PDIS6.ST.Str.general
20	PDIS6.ST.Op.general
21	PDIS7.ST.Str.general
22	PDIS7.ST.Op.general
23	PDIS8.ST.Str.general
24	PDIS8.ST.Op.general
25	PDIS9.ST.Str.general
26	PDIS9.ST.Op.general
27	PDIS10.ST.Str.general
28	PDIS10.ST.Op.general
29	PIOC1.ST.Str.general
30	PIOC1.ST.Op.general
31	PIOC2.ST.Str.general
32	PIOC2.ST.Op.general

Enumeration	IEC 61850 report dataset items
33	PIOC3.ST.Str.general
34	PIOC3.ST.Op.general
35	PIOC4.ST.Str.general
36	PIOC4.ST.Op.general
37	PIOC5.ST.Str.general
38	PIOC5.ST.Op.general
39	PIOC6.ST.Str.general
40	PIOC6.ST.Op.general
41	PIOC7.ST.Str.general
42	PIOC7.ST.Op.general
43	PIOC8.ST.Str.general
44	PIOC8.ST.Op.general
45	PIOC9.ST.Str.general
46	PIOC9.ST.Op.general
47	PIOC10.ST.Str.general
48	PIOC10.ST.Op.general
49	PIOC11.ST.Str.general
50	PIOC11.ST.Op.general
51	PIOC12.ST.Str.general
52	PIOC12.ST.Op.general
53	PIOC13.ST.Str.general
54	PIOC13.ST.Op.general
55	PIOC14.ST.Str.general
56	PIOC14.ST.Op.general
57	PIOC15.ST.Str.general
58	PIOC15.ST.Op.general
59	PIOC16.ST.Str.general
60	PIOC16.ST.Op.general
61	PIOC17.ST.Str.general
62	PIOC17.ST.Op.general
63	PIOC18.ST.Str.general
64	PIOC18.ST.Op.general
65	PIOC19.ST.Str.general
66	PIOC19.ST.Op.general
67	PIOC20.ST.Str.general
68	PIOC20.ST.Op.general
69	PIOC21.ST.Str.general
70	PIOC21.ST.Op.general
71	PIOC22.ST.Str.general
72	PIOC22.ST.Op.general
73	PIOC23.ST.Str.general
74	PIOC23.ST.Op.general
75	PIOC24.ST.Str.general
76	PIOC24.ST.Op.general
77	PIOC25.ST.Str.general
78	PIOC25.ST.Op.general
79	PIOC26.ST.Str.general
80	PIOC26.ST.Op.general
81	PIOC27.ST.Str.general
82	PIOC27.ST.Op.general
83	PIOC28.ST.Str.general
84	PIOC28.ST.Op.general
85	PIOC29.ST.Str.general

Enumeration	IEC 61850 report dataset items
86	PIOC29.ST.Op.general
87	PIOC30.ST.Str.general
88	PIOC30.ST.Op.general
89	PIOC31.ST.Str.general
90	PIOC31.ST.Op.general
91	PIOC32.ST.Str.general
92	PIOC32.ST.Op.general
93	PIOC33.ST.Str.general
94	PIOC33.ST.Op.general
95	PIOC34.ST.Str.general
96	PIOC34.ST.Op.general
97	PIOC35.ST.Str.general
98	PIOC35.ST.Op.general
99	PIOC36.ST.Str.general
100	PIOC36.ST.Op.general
101	PIOC37.ST.Str.general
102	PIOC37.ST.Op.general
103	PIOC38.ST.Str.general
104	PIOC38.ST.Op.general
105	PIOC39.ST.Str.general
106	PIOC39.ST.Op.general
107	PIOC40.ST.Str.general
108	PIOC40.ST.Op.general
109	PIOC41.ST.Str.general
110	PIOC41.ST.Op.general
111	PIOC42.ST.Str.general
112	PIOC42.ST.Op.general
113	PIOC43.ST.Str.general
114	PIOC43.ST.Op.general
115	PIOC44.ST.Str.general
116	PIOC44.ST.Op.general
117	PIOC45.ST.Str.general
118	PIOC45.ST.Op.general
119	PIOC46.ST.Str.general
120	PIOC46.ST.Op.general
121	PIOC47.ST.Str.general
122	PIOC47.ST.Op.general
123	PIOC48.ST.Str.general
124	PIOC48.ST.Op.general
125	PIOC49.ST.Str.general
126	PIOC49.ST.Op.general
127	PIOC50.ST.Str.general
128	PIOC50.ST.Op.general
129	PIOC51.ST.Str.general
130	PIOC51.ST.Op.general
131	PIOC52.ST.Str.general
132	PIOC52.ST.Op.general
133	PIOC53.ST.Str.general
134	PIOC53.ST.Op.general
135	PIOC54.ST.Str.general
136	PIOC54.ST.Op.general
137	PIOC55.ST.Str.general
138	PIOC55.ST.Op.general

Enumeration	IEC 61850 report dataset items
139	PIOC56.ST.Str.general
140	PIOC56.ST.Op.general
141	PIOC57.ST.Str.general
142	PIOC57.ST.Op.general
143	PIOC58.ST.Str.general
144	PIOC58.ST.Op.general
145	PIOC59.ST.Str.general
146	PIOC59.ST.Op.general
147	PIOC60.ST.Str.general
148	PIOC60.ST.Op.general
149	PIOC61.ST.Str.general
150	PIOC61.ST.Op.general
151	PIOC62.ST.Str.general
152	PIOC62.ST.Op.general
153	PIOC63.ST.Str.general
154	PIOC63.ST.Op.general
155	PIOC64.ST.Str.general
156	PIOC64.ST.Op.general
157	PIOC65.ST.Str.general
158	PIOC65.ST.Op.general
159	PIOC66.ST.Str.general
160	PIOC66.ST.Op.general
161	PIOC67.ST.Str.general
162	PIOC67.ST.Op.general
163	PIOC68.ST.Str.general
164	PIOC68.ST.Op.general
165	PIOC69.ST.Str.general
166	PIOC69.ST.Op.general
167	PIOC70.ST.Str.general
168	PIOC70.ST.Op.general
169	PIOC71.ST.Str.general
170	PIOC71.ST.Op.general
171	PIOC72.ST.Str.general
172	PIOC72.ST.Op.general
173	PTOC1.ST.Str.general
174	PTOC1.ST.Op.general
175	PTOC2.ST.Str.general
176	PTOC2.ST.Op.general
177	PTOC3.ST.Str.general
178	PTOC3.ST.Op.general
179	PTOC4.ST.Str.general
180	PTOC4.ST.Op.general
181	PTOC5.ST.Str.general
182	PTOC5.ST.Op.general
183	PTOC6.ST.Str.general
184	PTOC6.ST.Op.general
185	PTOC7.ST.Str.general
186	PTOC7.ST.Op.general
187	PTOC8.ST.Str.general
188	PTOC8.ST.Op.general
189	PTOC9.ST.Str.general
190	PTOC9.ST.Op.general
191	PTOC10.ST.Str.general

Enumeration	IEC 61850 report dataset items
192	PTOC10.ST.Op.general
193	PTOC11.ST.Str.general
194	PTOC11.ST.Op.general
195	PTOC12.ST.Str.general
196	PTOC12.ST.Op.general
197	PTOC13.ST.Str.general
198	PTOC13.ST.Op.general
199	PTOC14.ST.Str.general
200	PTOC14.ST.Op.general
201	PTOC15.ST.Str.general
202	PTOC15.ST.Op.general
203	PTOC16.ST.Str.general
204	PTOC16.ST.Op.general
205	PTOC17.ST.Str.general
206	PTOC17.ST.Op.general
207	PTOC18.ST.Str.general
208	PTOC18.ST.Op.general
209	PTOC19.ST.Str.general
210	PTOC19.ST.Op.general
211	PTOC20.ST.Str.general
212	PTOC20.ST.Op.general
213	PTOC21.ST.Str.general
214	PTOC21.ST.Op.general
215	PTOC22.ST.Str.general
216	PTOC22.ST.Op.general
217	PTOC23.ST.Str.general
218	PTOC23.ST.Op.general
219	PTOC24.ST.Str.general
220	PTOC24.ST.Op.general
221	PTOV1.ST.Str.general
222	PTOV1.ST.Op.general
223	PTOV2.ST.Str.general
224	PTOV2.ST.Op.general
225	PTOV3.ST.Str.general
226	PTOV3.ST.Op.general
227	PTOV4.ST.Str.general
228	PTOV4.ST.Op.general
229	PTOV5.ST.Str.general
230	PTOV5.ST.Op.general
231	PTOV6.ST.Str.general
232	PTOV6.ST.Op.general
233	PTOV7.ST.Str.general
234	PTOV7.ST.Op.general
235	PTOV8.ST.Str.general
236	PTOV8.ST.Op.general
237	PTOV9.ST.Str.general
238	PTOV9.ST.Op.general
239	PTOV10.ST.Str.general
240	PTOV10.ST.Op.general
241	PTRC1.ST.Tr.general
242	PTRC1.ST.Op.general
243	PTRC2.ST.Tr.general
244	PTRC2.ST.Op.general

Enumeration	IEC 61850 report dataset items
245	PTRC3.ST.Tr.general
246	PTRC3.ST.Op.general
247	PTRC4.ST.Tr.general
248	PTRC4.ST.Op.general
249	PTRC5.ST.Tr.general
250	PTRC5.ST.Op.general
251	PTRC6.ST.Tr.general
252	PTRC6.ST.Op.general
253	PTUV1.ST.Str.general
254	PTUV1.ST.Op.general
255	PTUV2.ST.Str.general
256	PTUV2.ST.Op.general
257	PTUV3.ST.Str.general
258	PTUV3.ST.Op.general
259	PTUV4.ST.Str.general
260	PTUV4.ST.Op.general
261	PTUV5.ST.Str.general
262	PTUV5.ST.Op.general
263	PTUV6.ST.Str.general
264	PTUV6.ST.Op.general
265	PTUV7.ST.Str.general
266	PTUV7.ST.Op.general
267	PTUV8.ST.Str.general
268	PTUV8.ST.Op.general
269	PTUV9.ST.Str.general
270	PTUV9.ST.Op.general
271	PTUV10.ST.Str.general
272	PTUV10.ST.Op.general
273	PTUV11.ST.Str.general
274	PTUV11.ST.Op.general
275	PTUV12.ST.Str.general
276	PTUV12.ST.Op.general
277	PTUV13.ST.Str.general
278	PTUV13.ST.Op.general
279	RBRF1.ST.OpEx.general
280	RBRF1.ST.OpIn.general
281	RBRF2.ST.OpEx.general
282	RBRF2.ST.OpIn.general
283	RBRF3.ST.OpEx.general
284	RBRF3.ST.OpIn.general
285	RBRF4.ST.OpEx.general
286	RBRF4.ST.OpIn.general
287	RBRF5.ST.OpEx.general
288	RBRF5.ST.OpIn.general
289	RBRF6.ST.OpEx.general
290	RBRF6.ST.OpIn.general
291	RBRF7.ST.OpEx.general
292	RBRF7.ST.OpIn.general
293	RBRF8.ST.OpEx.general
294	RBRF8.ST.OpIn.general
295	RBRF9.ST.OpEx.general
296	RBRF9.ST.OpIn.general
297	RBRF10.ST.OpEx.general

Enumeration	IEC 61850 report dataset items
298	RBRF10.ST.OpIn.general
299	RBRF11.ST.OpEx.general
300	RBRF11.ST.OpIn.general
301	RBRF12.ST.OpEx.general
302	RBRF12.ST.OpIn.general
303	RBRF13.ST.OpEx.general
304	RBRF13.ST.OpIn.general
305	RBRF14.ST.OpEx.general
306	RBRF14.ST.OpIn.general
307	RBRF15.ST.OpEx.general
308	RBRF15.ST.OpIn.general
309	RBRF16.ST.OpEx.general
310	RBRF16.ST.OpIn.general
311	RBRF17.ST.OpEx.general
312	RBRF17.ST.OpIn.general
313	RBRF18.ST.OpEx.general
314	RBRF18.ST.OpIn.general
315	RBRF19.ST.OpEx.general
316	RBRF19.ST.OpIn.general
317	RBRF20.ST.OpEx.general
318	RBRF20.ST.OpIn.general
319	RBRF21.ST.OpEx.general
320	RBRF21.ST.OpIn.general
321	RBRF22.ST.OpEx.general
322	RBRF22.ST.OpIn.general
323	RBRF23.ST.OpEx.general
324	RBRF23.ST.OpIn.general
325	RBRF24.ST.OpEx.general
326	RBRF24.ST.OpIn.general
327	RFLO1.MX.FltDiskm.mag.f
328	RFLO2.MX.FltDiskm.mag.f
329	RFLO3.MX.FltDiskm.mag.f
330	RFLO4.MX.FltDiskm.mag.f
331	RFLO5.MX.FltDiskm.mag.f
332	RPSB1.ST.Str.general
333	RPSB1.ST.Op.general
334	RPSB1.ST.BlkZn.stVal
335	RREC1.ST.Op.general
336	RREC1.ST.AutoRecSt.stVal
337	RREC2.ST.Op.general
338	RREC2.ST.AutoRecSt.stVal
339	RREC3.ST.Op.general
340	RREC3.ST.AutoRecSt.stVal
341	RREC4.ST.Op.general
342	RREC4.ST.AutoRecSt.stVal
343	RREC5.ST.Op.general
344	RREC5.ST.AutoRecSt.stVal
345	RREC6.ST.Op.general
346	RREC6.ST.AutoRecSt.stVal
347	CSWI1.ST.Loc.stVal
348	CSWI1.ST.Pos.stVal
349	CSWI2.ST.Loc.stVal
350	CSWI2.ST.Pos.stVal

Enumeration	IEC 61850 report dataset items
351	CSWI3.ST.Loc.stVal
352	CSWI3.ST.Pos.stVal
353	CSWI4.ST.Loc.stVal
354	CSWI4.ST.Pos.stVal
355	CSWI5.ST.Loc.stVal
356	CSWI5.ST.Pos.stVal
357	CSWI6.ST.Loc.stVal
358	CSWI6.ST.Pos.stVal
359	CSWI7.ST.Loc.stVal
360	CSWI7.ST.Pos.stVal
361	CSWI8.ST.Loc.stVal
362	CSWI8.ST.Pos.stVal
363	CSWI9.ST.Loc.stVal
364	CSWI9.ST.Pos.stVal
365	CSWI10.ST.Loc.stVal
366	CSWI10.ST.Pos.stVal
367	CSWI11.ST.Loc.stVal
368	CSWI11.ST.Pos.stVal
369	CSWI12.ST.Loc.stVal
370	CSWI12.ST.Pos.stVal
371	CSWI13.ST.Loc.stVal
372	CSWI13.ST.Pos.stVal
373	CSWI14.ST.Loc.stVal
374	CSWI14.ST.Pos.stVal
375	CSWI15.ST.Loc.stVal
376	CSWI15.ST.Pos.stVal
377	CSWI16.ST.Loc.stVal
378	CSWI16.ST.Pos.stVal
379	CSWI17.ST.Loc.stVal
380	CSWI17.ST.Pos.stVal
381	CSWI18.ST.Loc.stVal
382	CSWI18.ST.Pos.stVal
383	CSWI19.ST.Loc.stVal
384	CSWI19.ST.Pos.stVal
385	CSWI20.ST.Loc.stVal
386	CSWI20.ST.Pos.stVal
387	CSWI21.ST.Loc.stVal
388	CSWI21.ST.Pos.stVal
389	CSWI22.ST.Loc.stVal
390	CSWI22.ST.Pos.stVal
391	CSWI23.ST.Loc.stVal
392	CSWI23.ST.Pos.stVal
393	CSWI24.ST.Loc.stVal
394	CSWI24.ST.Pos.stVal
395	CSWI25.ST.Loc.stVal
396	CSWI25.ST.Pos.stVal
397	CSWI26.ST.Loc.stVal
398	CSWI26.ST.Pos.stVal
399	CSWI27.ST.Loc.stVal
400	CSWI27.ST.Pos.stVal
401	CSWI28.ST.Loc.stVal
402	CSWI28.ST.Pos.stVal
403	CSWI29.ST.Loc.stVal

Enumeration	IEC 61850 report dataset items
404	CSWI29.ST.Pos.stVal
405	CSWI30.ST.Loc.stVal
406	CSWI30.ST.Pos.stVal
407	GGIO1.ST.Ind1.stVal
408	GGIO1.ST.Ind2.stVal
409	GGIO1.ST.Ind3.stVal
410	GGIO1.ST.Ind4.stVal
411	GGIO1.ST.Ind5.stVal
412	GGIO1.ST.Ind6.stVal
413	GGIO1.ST.Ind7.stVal
414	GGIO1.ST.Ind8.stVal
415	GGIO1.ST.Ind9.stVal
416	GGIO1.ST.Ind10.stVal
417	GGIO1.ST.Ind11.stVal
418	GGIO1.ST.Ind12.stVal
419	GGIO1.ST.Ind13.stVal
420	GGIO1.ST.Ind14.stVal
421	GGIO1.ST.Ind15.stVal
422	GGIO1.ST.Ind16.stVal
423	GGIO1.ST.Ind17.stVal
424	GGIO1.ST.Ind18.stVal
425	GGIO1.ST.Ind19.stVal
426	GGIO1.ST.Ind20.stVal
427	GGIO1.ST.Ind21.stVal
428	GGIO1.ST.Ind22.stVal
429	GGIO1.ST.Ind23.stVal
430	GGIO1.ST.Ind24.stVal
431	GGIO1.ST.Ind25.stVal
432	GGIO1.ST.Ind26.stVal
433	GGIO1.ST.Ind27.stVal
434	GGIO1.ST.Ind28.stVal
435	GGIO1.ST.Ind29.stVal
436	GGIO1.ST.Ind30.stVal
437	GGIO1.ST.Ind31.stVal
438	GGIO1.ST.Ind32.stVal
439	GGIO1.ST.Ind33.stVal
440	GGIO1.ST.Ind34.stVal
441	GGIO1.ST.Ind35.stVal
442	GGIO1.ST.Ind36.stVal
443	GGIO1.ST.Ind37.stVal
444	GGIO1.ST.Ind38.stVal
445	GGIO1.ST.Ind39.stVal
446	GGIO1.ST.Ind40.stVal
447	GGIO1.ST.Ind41.stVal
448	GGIO1.ST.Ind42.stVal
449	GGIO1.ST.Ind43.stVal
450	GGIO1.ST.Ind44.stVal
451	GGIO1.ST.Ind45.stVal
452	GGIO1.ST.Ind46.stVal
453	GGIO1.ST.Ind47.stVal
454	GGIO1.ST.Ind48.stVal
455	GGIO1.ST.Ind49.stVal
456	GGIO1.ST.Ind50.stVal

Enumeration	IEC 61850 report dataset items
457	GGIO1.ST.Ind51.stVal
458	GGIO1.ST.Ind52.stVal
459	GGIO1.ST.Ind53.stVal
460	GGIO1.ST.Ind54.stVal
461	GGIO1.ST.Ind55.stVal
462	GGIO1.ST.Ind56.stVal
463	GGIO1.ST.Ind57.stVal
464	GGIO1.ST.Ind58.stVal
465	GGIO1.ST.Ind59.stVal
466	GGIO1.ST.Ind60.stVal
467	GGIO1.ST.Ind61.stVal
468	GGIO1.ST.Ind62.stVal
469	GGIO1.ST.Ind63.stVal
470	GGIO1.ST.Ind64.stVal
471	GGIO1.ST.Ind65.stVal
472	GGIO1.ST.Ind66.stVal
473	GGIO1.ST.Ind67.stVal
474	GGIO1.ST.Ind68.stVal
475	GGIO1.ST.Ind69.stVal
476	GGIO1.ST.Ind70.stVal
477	GGIO1.ST.Ind71.stVal
478	GGIO1.ST.Ind72.stVal
479	GGIO1.ST.Ind73.stVal
480	GGIO1.ST.Ind74.stVal
481	GGIO1.ST.Ind75.stVal
482	GGIO1.ST.Ind76.stVal
483	GGIO1.ST.Ind77.stVal
484	GGIO1.ST.Ind78.stVal
485	GGIO1.ST.Ind79.stVal
486	GGIO1.ST.Ind80.stVal
487	GGIO1.ST.Ind81.stVal
488	GGIO1.ST.Ind82.stVal
489	GGIO1.ST.Ind83.stVal
490	GGIO1.ST.Ind84.stVal
491	GGIO1.ST.Ind85.stVal
492	GGIO1.ST.Ind86.stVal
493	GGIO1.ST.Ind87.stVal
494	GGIO1.ST.Ind88.stVal
495	GGIO1.ST.Ind89.stVal
496	GGIO1.ST.Ind90.stVal
497	GGIO1.ST.Ind91.stVal
498	GGIO1.ST.Ind92.stVal
499	GGIO1.ST.Ind93.stVal
500	GGIO1.ST.Ind94.stVal
501	GGIO1.ST.Ind95.stVal
502	GGIO1.ST.Ind96.stVal
503	GGIO1.ST.Ind97.stVal
504	GGIO1.ST.Ind98.stVal
505	GGIO1.ST.Ind99.stVal
506	GGIO1.ST.Ind100.stVal
507	GGIO1.ST.Ind101.stVal
508	GGIO1.ST.Ind102.stVal
509	GGIO1.ST.Ind103.stVal

Enumeration	IEC 61850 report dataset items
510	GGIO1.ST.Ind104.stVal
511	GGIO1.ST.Ind105.stVal
512	GGIO1.ST.Ind106.stVal
513	GGIO1.ST.Ind107.stVal
514	GGIO1.ST.Ind108.stVal
515	GGIO1.ST.Ind109.stVal
516	GGIO1.ST.Ind110.stVal
517	GGIO1.ST.Ind111.stVal
518	GGIO1.ST.Ind112.stVal
519	GGIO1.ST.Ind113.stVal
520	GGIO1.ST.Ind114.stVal
521	GGIO1.ST.Ind115.stVal
522	GGIO1.ST.Ind116.stVal
523	GGIO1.ST.Ind117.stVal
524	GGIO1.ST.Ind118.stVal
525	GGIO1.ST.Ind119.stVal
526	GGIO1.ST.Ind120.stVal
527	GGIO1.ST.Ind121.stVal
528	GGIO1.ST.Ind122.stVal
529	GGIO1.ST.Ind123.stVal
530	GGIO1.ST.Ind124.stVal
531	GGIO1.ST.Ind125.stVal
532	GGIO1.ST.Ind126.stVal
533	GGIO1.ST.Ind127.stVal
534	GGIO1.ST.Ind128.stVal
535	MMXU1.MX.TotW.mag.f
536	MMXU1.MX.TotVAr.mag.f
537	MMXU1.MX.TotVA.mag.f
538	MMXU1.MX.TotPF.mag.f
539	MMXU1.MX.Hz.mag.f
540	MMXU1.MX.PPV.phsAB.cVal.mag.f
541	MMXU1.MX.PPV.phsAB.cVal.ang.f
542	MMXU1.MX.PPV.phsBC.cVal.mag.f
543	MMXU1.MX.PPV.phsBC.cVal.ang.f
544	MMXU1.MX.PPV.phsCA.cVal.mag.f
545	MMXU1.MX.PPV.phsCA.cVal.ang.f
546	MMXU1.MX.PhV.phsA.cVal.mag.f
547	MMXU1.MX.PhV.phsA.cVal.ang.f
548	MMXU1.MX.PhV.phsB.cVal.mag.f
549	MMXU1.MX.PhV.phsB.cVal.ang.f
550	MMXU1.MX.PhV.phsC.cVal.mag.f
551	MMXU1.MX.PhV.phsC.cVal.ang.f
552	MMXU1.MX.A.phsA.cVal.mag.f
553	MMXU1.MX.A.phsA.cVal.ang.f
554	MMXU1.MX.A.phsB.cVal.mag.f
555	MMXU1.MX.A.phsB.cVal.ang.f
556	MMXU1.MX.A.phsC.cVal.mag.f
557	MMXU1.MX.A.phsC.cVal.ang.f
558	MMXU1.MX.A.neut.cVal.mag.f
559	MMXU1.MX.A.neut.cVal.ang.f
560	MMXU1.MX.W.phsA.cVal.mag.f
561	MMXU1.MX.W.phsB.cVal.mag.f
562	MMXU1.MX.W.phsC.cVal.mag.f

Enumeration	IEC 61850 report dataset items
563	MMXU1.MX.VAr.phsA.cVal.mag.f
564	MMXU1.MX.VAr.phsB.cVal.mag.f
565	MMXU1.MX.VAr.phsC.cVal.mag.f
566	MMXU1.MX.VA.phsA.cVal.mag.f
567	MMXU1.MX.VA.phsB.cVal.mag.f
568	MMXU1.MX.VA.phsC.cVal.mag.f
569	MMXU1.MX.PF.phsA.cVal.mag.f
570	MMXU1.MX.PF.phsB.cVal.mag.f
571	MMXU1.MX.PF.phsC.cVal.mag.f
572	MMXU2.MX.TotW.mag.f
573	MMXU2.MX.TotVAr.mag.f
574	MMXU2.MX.TotVA.mag.f
575	MMXU2.MX.TotPF.mag.f
576	MMXU2.MX.Hz.mag.f
577	MMXU2.MX.PPV.phsAB.cVal.mag.f
578	MMXU2.MX.PPV.phsAB.cVal.ang.f
579	MMXU2.MX.PPV.phsBC.cVal.mag.f
580	MMXU2.MX.PPV.phsBC.cVal.ang.f
581	MMXU2.MX.PPV.phsCA.cVal.mag.f
582	MMXU2.MX.PPV.phsCA.cVal.ang.f
583	MMXU2.MX.PhV.phsA.cVal.mag.f
584	MMXU2.MX.PhV.phsA.cVal.ang.f
585	MMXU2.MX.PhV.phsB.cVal.mag.f
586	MMXU2.MX.PhV.phsB.cVal.ang.f
587	MMXU2.MX.PhV.phsC.cVal.mag.f
588	MMXU2.MX.PhV.phsC.cVal.ang.f
589	MMXU2.MX.A.phsA.cVal.mag.f
590	MMXU2.MX.A.phsA.cVal.ang.f
591	MMXU2.MX.A.phsB.cVal.mag.f
592	MMXU2.MX.A.phsB.cVal.ang.f
593	MMXU2.MX.A.phsC.cVal.mag.f
594	MMXU2.MX.A.phsC.cVal.ang.f
595	MMXU2.MX.A.neut.cVal.mag.f
596	MMXU2.MX.A.neut.cVal.ang.f
597	MMXU2.MX.W.phsA.cVal.mag.f
598	MMXU2.MX.W.phsB.cVal.mag.f
599	MMXU2.MX.W.phsC.cVal.mag.f
600	MMXU2.MX.VAr.phsA.cVal.mag.f
601	MMXU2.MX.VAr.phsB.cVal.mag.f
602	MMXU2.MX.VAr.phsC.cVal.mag.f
603	MMXU2.MX.VA.phsA.cVal.mag.f
604	MMXU2.MX.VA.phsB.cVal.mag.f
605	MMXU2.MX.VA.phsC.cVal.mag.f
606	MMXU2.MX.PF.phsA.cVal.mag.f
607	MMXU2.MX.PF.phsB.cVal.mag.f
608	MMXU2.MX.PF.phsC.cVal.mag.f
609	MMXU3.MX.TotW.mag.f
610	MMXU3.MX.TotVAr.mag.f
611	MMXU3.MX.TotVA.mag.f
612	MMXU3.MX.TotPF.mag.f
613	MMXU3.MX.Hz.mag.f
614	MMXU3.MX.PPV.phsAB.cVal.mag.f
615	MMXU3.MX.PPV.phsAB.cVal.ang.f

Enumeration	IEC 61850 report dataset items
616	MMXU3.MX.PPV.phsBC.cVal.mag.f
617	MMXU3.MX.PPV.phsBC.cVal.ang.f
618	MMXU3.MX.PPV.phsCA.cVal.mag.f
619	MMXU3.MX.PPV.phsCA.cVal.ang.f
620	MMXU3.MX.PhV.phsA.cVal.mag.f
621	MMXU3.MX.PhV.phsA.cVal.ang.f
622	MMXU3.MX.PhV.phsB.cVal.mag.f
623	MMXU3.MX.PhV.phsB.cVal.ang.f
624	MMXU3.MX.PhV.phsC.cVal.mag.f
625	MMXU3.MX.PhV.phsC.cVal.ang.f
626	MMXU3.MX.A.phsA.cVal.mag.f
627	MMXU3.MX.A.phsA.cVal.ang.f
628	MMXU3.MX.A.phsB.cVal.mag.f
629	MMXU3.MX.A.phsB.cVal.ang.f
630	MMXU3.MX.A.phsC.cVal.mag.f
631	MMXU3.MX.A.phsC.cVal.ang.f
632	MMXU3.MX.A.neut.cVal.mag.f
633	MMXU3.MX.A.neut.cVal.ang.f
634	MMXU3.MX.W.phsA.cVal.mag.f
635	MMXU3.MX.W.phsB.cVal.mag.f
636	MMXU3.MX.W.phsC.cVal.mag.f
637	MMXU3.MX.VAr.phsA.cVal.mag.f
638	MMXU3.MX.VAr.phsB.cVal.mag.f
639	MMXU3.MX.VAr.phsC.cVal.mag.f
640	MMXU3.MX.VA.phsA.cVal.mag.f
641	MMXU3.MX.VA.phsB.cVal.mag.f
642	MMXU3.MX.VA.phsC.cVal.mag.f
643	MMXU3.MX.PF.phsA.cVal.mag.f
644	MMXU3.MX.PF.phsB.cVal.mag.f
645	MMXU3.MX.PF.phsC.cVal.mag.f
646	MMXU4.MX.TotW.mag.f
647	MMXU4.MX.TotVAr.mag.f
648	MMXU4.MX.TotVA.mag.f
649	MMXU4.MX.TotPF.mag.f
650	MMXU4.MX.Hz.mag.f
651	MMXU4.MX.PPV.phsAB.cVal.mag.f
652	MMXU4.MX.PPV.phsAB.cVal.ang.f
653	MMXU4.MX.PPV.phsBC.cVal.mag.f
654	MMXU4.MX.PPV.phsBC.cVal.ang.f
655	MMXU4.MX.PPV.phsCA.cVal.mag.f
656	MMXU4.MX.PPV.phsCA.cVal.ang.f
657	MMXU4.MX.PhV.phsA.cVal.mag.f
658	MMXU4.MX.PhV.phsA.cVal.ang.f
659	MMXU4.MX.PhV.phsB.cVal.mag.f
660	MMXU4.MX.PhV.phsB.cVal.ang.f
661	MMXU4.MX.PhV.phsC.cVal.mag.f
662	MMXU4.MX.PhV.phsC.cVal.ang.f
663	MMXU4.MX.A.phsA.cVal.mag.f
664	MMXU4.MX.A.phsA.cVal.ang.f
665	MMXU4.MX.A.phsB.cVal.mag.f
666	MMXU4.MX.A.phsB.cVal.ang.f
667	MMXU4.MX.A.phsC.cVal.mag.f
668	MMXU4.MX.A.phsC.cVal.ang.f

Enumeration	IEC 61850 report dataset items
669	MMXU4.MX.A.neut.cVal.mag.f
670	MMXU4.MX.A.neut.cVal.ang.f
671	MMXU4.MX.W.phsA.cVal.mag.f
672	MMXU4.MX.W.phsB.cVal.mag.f
673	MMXU4.MX.W.phsC.cVal.mag.f
674	MMXU4.MX.VAr.phsA.cVal.mag.f
675	MMXU4.MX.VAr.phsB.cVal.mag.f
676	MMXU4.MX.VAr.phsC.cVal.mag.f
677	MMXU4.MX.VA.phsA.cVal.mag.f
678	MMXU4.MX.VA.phsB.cVal.mag.f
679	MMXU4.MX.VA.phsC.cVal.mag.f
680	MMXU4.MX.PF.phsA.cVal.mag.f
681	MMXU4.MX.PF.phsB.cVal.mag.f
682	MMXU4.MX.PF.phsC.cVal.mag.f
683	MMXU5.MX.TotW.mag.f
684	MMXU5.MX.TotVAr.mag.f
685	MMXU5.MX.TotVA.mag.f
686	MMXU5.MX.TotPF.mag.f
687	MMXU5.MX.Hz.mag.f
688	MMXU5.MX.PPV.phsAB.cVal.mag.f
689	MMXU5.MX.PPV.phsAB.cVal.ang.f
690	MMXU5.MX.PPV.phsBC.cVal.mag.f
691	MMXU5.MX.PPV.phsBC.cVal.ang.f
692	MMXU5.MX.PPV.phsCA.cVal.mag.f
693	MMXU5.MX.PPV.phsCA.cVal.ang.f
694	MMXU5.MX.PhV.phsA.cVal.mag.f
695	MMXU5.MX.PhV.phsA.cVal.ang.f
696	MMXU5.MX.PhV.phsB.cVal.mag.f
697	MMXU5.MX.PhV.phsB.cVal.ang.f
698	MMXU5.MX.PhV.phsC.cVal.mag.f
699	MMXU5.MX.PhV.phsC.cVal.ang.f
700	MMXU5.MX.A.phsA.cVal.mag.f
701	MMXU5.MX.A.phsA.cVal.ang.f
702	MMXU5.MX.A.phsB.cVal.mag.f
703	MMXU5.MX.A.phsB.cVal.ang.f
704	MMXU5.MX.A.phsC.cVal.mag.f
705	MMXU5.MX.A.phsC.cVal.ang.f
706	MMXU5.MX.A.neut.cVal.mag.f
707	MMXU5.MX.A.neut.cVal.ang.f
708	MMXU5.MX.W.phsA.cVal.mag.f
709	MMXU5.MX.W.phsB.cVal.mag.f
710	MMXU5.MX.W.phsC.cVal.mag.f
711	MMXU5.MX.VAr.phsA.cVal.mag.f
712	MMXU5.MX.VAr.phsB.cVal.mag.f
713	MMXU5.MX.VAr.phsC.cVal.mag.f
714	MMXU5.MX.VA.phsA.cVal.mag.f
715	MMXU5.MX.VA.phsB.cVal.mag.f
716	MMXU5.MX.VA.phsC.cVal.mag.f
717	MMXU5.MX.PF.phsA.cVal.mag.f
718	MMXU5.MX.PF.phsB.cVal.mag.f
719	MMXU5.MX.PF.phsC.cVal.mag.f
720	MMXU6.MX.TotW.mag.f
721	MMXU6.MX.TotVAr.mag.f

Enumeration	IEC 61850 report dataset items
722	MMXU6.MX.TotVA.mag.f
723	MMXU6.MX.TotPF.mag.f
724	MMXU6.MX.Hz.mag.f
725	MMXU6.MX.PPV.phsAB.cVal.mag.f
726	MMXU6.MX.PPV.phsAB.cVal.ang.f
727	MMXU6.MX.PPV.phsBC.cVal.mag.f
728	MMXU6.MX.PPV.phsBC.cVal.ang.f
729	MMXU6.MX.PPV.phsCA.cVal.mag.f
730	MMXU6.MX.PPV.phsCA.cVal.ang.f
731	MMXU6.MX.PhV.phsA.cVal.mag.f
732	MMXU6.MX.PhV.phsA.cVal.ang.f
733	MMXU6.MX.PhV.phsB.cVal.mag.f
734	MMXU6.MX.PhV.phsB.cVal.ang.f
735	MMXU6.MX.PhV.phsC.cVal.mag.f
736	MMXU6.MX.PhV.phsC.cVal.ang.f
737	MMXU6.MX.A.phsA.cVal.mag.f
738	MMXU6.MX.A.phsA.cVal.ang.f
739	MMXU6.MX.A.phsB.cVal.mag.f
740	MMXU6.MX.A.phsB.cVal.ang.f
741	MMXU6.MX.A.phsC.cVal.mag.f
742	MMXU6.MX.A.phsC.cVal.ang.f
743	MMXU6.MX.A.neut.cVal.mag.f
744	MMXU6.MX.A.neut.cVal.ang.f
745	MMXU6.MX.W.phsA.cVal.mag.f
746	MMXU6.MX.W.phsB.cVal.mag.f
747	MMXU6.MX.W.phsC.cVal.mag.f
748	MMXU6.MX.VAr.phsA.cVal.mag.f
749	MMXU6.MX.VAr.phsB.cVal.mag.f
750	MMXU6.MX.VAr.phsC.cVal.mag.f
751	MMXU6.MX.VA.phsA.cVal.mag.f
752	MMXU6.MX.VA.phsB.cVal.mag.f
753	MMXU6.MX.VA.phsC.cVal.mag.f
754	MMXU6.MX.PF.phsA.cVal.mag.f
755	MMXU6.MX.PF.phsB.cVal.mag.f
756	MMXU6.MX.PF.phsC.cVal.mag.f
757	GGIO4.MX.AnIn1.mag.f
758	GGIO4.MX.AnIn2.mag.f
759	GGIO4.MX.AnIn3.mag.f
760	GGIO4.MX.AnIn4.mag.f
761	GGIO4.MX.AnIn5.mag.f
762	GGIO4.MX.AnIn6.mag.f
763	GGIO4.MX.AnIn7.mag.f
764	GGIO4.MX.AnIn8.mag.f
765	GGIO4.MX.AnIn9.mag.f
766	GGIO4.MX.AnIn10.mag.f
767	GGIO4.MX.AnIn11.mag.f
768	GGIO4.MX.AnIn12.mag.f
769	GGIO4.MX.AnIn13.mag.f
770	GGIO4.MX.AnIn14.mag.f
771	GGIO4.MX.AnIn15.mag.f
772	GGIO4.MX.AnIn16.mag.f
773	GGIO4.MX.AnIn17.mag.f
774	GGIO4.MX.AnIn18.mag.f

Enumeration	IEC 61850 report dataset items
775	GGIO4.MX.AnIn19.mag.f
776	GGIO4.MX.AnIn20.mag.f
777	GGIO4.MX.AnIn21.mag.f
778	GGIO4.MX.AnIn22.mag.f
779	GGIO4.MX.AnIn23.mag.f
780	GGIO4.MX.AnIn24.mag.f
781	GGIO4.MX.AnIn25.mag.f
782	GGIO4.MX.AnIn26.mag.f
783	GGIO4.MX.AnIn27.mag.f
784	GGIO4.MX.AnIn28.mag.f
785	GGIO4.MX.AnIn29.mag.f
786	GGIO4.MX.AnIn30.mag.f
787	GGIO4.MX.AnIn31.mag.f
788	GGIO4.MX.AnIn32.mag.f
789	XSWI1.ST.Loc.stVal
790	XSWI1.ST.Pos.stVal
791	XSWI2.ST.Loc.stVal
792	XSWI2.ST.Pos.stVal
793	XSWI3.ST.Loc.stVal
794	XSWI3.ST.Pos.stVal
795	XSWI4.ST.Loc.stVal
796	XSWI4.ST.Pos.stVal
797	XSWI5.ST.Loc.stVal
798	XSWI5.ST.Pos.stVal
799	XSWI6.ST.Loc.stVal
800	XSWI6.ST.Pos.stVal
801	XSWI7.ST.Loc.stVal
802	XSWI7.ST.Pos.stVal
803	XSWI8.ST.Loc.stVal
804	XSWI8.ST.Pos.stVal
805	XSWI9.ST.Loc.stVal
806	XSWI9.ST.Pos.stVal
807	XSWI10.ST.Loc.stVal
808	XSWI10.ST.Pos.stVal
809	XSWI11.ST.Loc.stVal
810	XSWI11.ST.Pos.stVal
811	XSWI12.ST.Loc.stVal
812	XSWI12.ST.Pos.stVal
813	XSWI13.ST.Loc.stVal
814	XSWI13.ST.Pos.stVal
815	XSWI14.ST.Loc.stVal
816	XSWI14.ST.Pos.stVal
817	XSWI15.ST.Loc.stVal
818	XSWI15.ST.Pos.stVal
819	XSWI16.ST.Loc.stVal
820	XSWI16.ST.Pos.stVal
821	XSWI17.ST.Loc.stVal
822	XSWI17.ST.Pos.stVal
823	XSWI18.ST.Loc.stVal
824	XSWI18.ST.Pos.stVal
825	XSWI19.ST.Loc.stVal
826	XSWI19.ST.Pos.stVal
827	XSWI20.ST.Loc.stVal
828	XSWI20.ST.Pos.stVal
829	XSWI21.ST.Loc.stVal
830	XSWI21.ST.Pos.stVal
831	XSWI22.ST.Loc.stVal
832	XSWI22.ST.Pos.stVal
833	XSWI23.ST.Loc.stVal
834	XSWI23.ST.Pos.stVal
835	XSWI24.ST.Loc.stVal
836	XSWI24.ST.Pos.stVal
837	XCBR1.ST.Loc.stVal
838	XCBR1.ST.Pos.stVal
839	XCBR2.ST.Loc.stVal
840	XCBR2.ST.Pos.stVal
841	XCBR3.ST.Loc.stVal
842	XCBR3.ST.Pos.stVal
843	XCBR4.ST.Loc.stVal
844	XCBR4.ST.Pos.stVal
845	XCBR5.ST.Loc.stVal
846	XCBR5.ST.Pos.stVal
847	XCBR6.ST.Loc.stVal
848	XCBR6.ST.Pos.stVal

F616
ENUMERATION: IEC 61850 GOOSE DATASET ITEMS

Enumeration	GOOSE dataset items
0	None
1	GGIO1.ST.Ind1.q
2	GGIO1.ST.Ind1.stVal
3	GGIO1.ST.Ind2.q
4	GGIO1.ST.Ind2.stVal
5	GGIO1.ST.Ind3.q
6	GGIO1.ST.Ind3.stVal
7	GGIO1.ST.Ind4.q
8	GGIO1.ST.Ind4.stVal
9	GGIO1.ST.Ind5.q
10	GGIO1.ST.Ind5.stVal
11	GGIO1.ST.Ind6.q
12	GGIO1.ST.Ind6.stVal
13	GGIO1.ST.Ind7.q
14	GGIO1.ST.Ind7.stVal
15	GGIO1.ST.Ind8.q
16	GGIO1.ST.Ind8.stVal
17	GGIO1.ST.Ind9.q
18	GGIO1.ST.Ind9.stVal
19	GGIO1.ST.Ind10.q
20	GGIO1.ST.Ind10.stVal
21	GGIO1.ST.Ind11.q
22	GGIO1.ST.Ind11.stVal
23	GGIO1.ST.Ind12.q
24	GGIO1.ST.Ind12.stVal
25	GGIO1.ST.Ind13.q
26	GGIO1.ST.Ind13.stVal

Enumeration	GOOSE dataset items
27	GGIO1.ST.Ind14.q
28	GGIO1.ST.Ind14.stVal
29	GGIO1.ST.Ind15.q
30	GGIO1.ST.Ind15.stVal
31	GGIO1.ST.Ind16.q
32	GGIO1.ST.Ind16.stVal
33	GGIO1.ST.Ind17.q
34	GGIO1.ST.Ind17.stVal
35	GGIO1.ST.Ind18.q
36	GGIO1.ST.Ind18.stVal
37	GGIO1.ST.Ind19.q
38	GGIO1.ST.Ind19.stVal
39	GGIO1.ST.Ind20.q
40	GGIO1.ST.Ind20.stVal
41	GGIO1.ST.Ind21.q
42	GGIO1.ST.Ind21.stVal
43	GGIO1.ST.Ind22.q
44	GGIO1.ST.Ind22.stVal
45	GGIO1.ST.Ind23.q
46	GGIO1.ST.Ind23.stVal
47	GGIO1.ST.Ind24.q
48	GGIO1.ST.Ind24.stVal
49	GGIO1.ST.Ind25.q
50	GGIO1.ST.Ind25.stVal
51	GGIO1.ST.Ind26.q
52	GGIO1.ST.Ind26.stVal
53	GGIO1.ST.Ind27.q
54	GGIO1.ST.Ind27.stVal
55	GGIO1.ST.Ind28.q
56	GGIO1.ST.Ind28.stVal
57	GGIO1.ST.Ind29.q
58	GGIO1.ST.Ind29.stVal
59	GGIO1.ST.Ind30.q
60	GGIO1.ST.Ind30.stVal
61	GGIO1.ST.Ind31.q
62	GGIO1.ST.Ind31.stVal
63	GGIO1.ST.Ind32.q
64	GGIO1.ST.Ind32.stVal
65	GGIO1.ST.Ind33.q
66	GGIO1.ST.Ind33.stVal
67	GGIO1.ST.Ind34.q
68	GGIO1.ST.Ind34.stVal
69	GGIO1.ST.Ind35.q
70	GGIO1.ST.Ind35.stVal
71	GGIO1.ST.Ind36.q
72	GGIO1.ST.Ind36.stVal
73	GGIO1.ST.Ind37.q
74	GGIO1.ST.Ind37.stVal
75	GGIO1.ST.Ind38.q
76	GGIO1.ST.Ind38.stVal
77	GGIO1.ST.Ind39.q
78	GGIO1.ST.Ind39.stVal
79	GGIO1.ST.Ind40.q

Enumeration	GOOSE dataset items
80	GGIO1.ST.Ind40.stVal
81	GGIO1.ST.Ind41.q
82	GGIO1.ST.Ind41.stVal
83	GGIO1.ST.Ind42.q
84	GGIO1.ST.Ind42.stVal
85	GGIO1.ST.Ind43.q
86	GGIO1.ST.Ind43.stVal
87	GGIO1.ST.Ind44.q
88	GGIO1.ST.Ind44.stVal
89	GGIO1.ST.Ind45.q
90	GGIO1.ST.Ind45.stVal
91	GGIO1.ST.Ind46.q
92	GGIO1.ST.Ind46.stVal
93	GGIO1.ST.Ind47.q
94	GGIO1.ST.Ind47.stVal
95	GGIO1.ST.Ind48.q
96	GGIO1.ST.Ind48.stVal
97	GGIO1.ST.Ind49.q
98	GGIO1.ST.Ind49.stVal
99	GGIO1.ST.Ind50.q
100	GGIO1.ST.Ind50.stVal
101	GGIO1.ST.Ind51.q
102	GGIO1.ST.Ind51.stVal
103	GGIO1.ST.Ind52.q
104	GGIO1.ST.Ind52.stVal
105	GGIO1.ST.Ind53.q
106	GGIO1.ST.Ind53.stVal
107	GGIO1.ST.Ind54.q
108	GGIO1.ST.Ind54.stVal
109	GGIO1.ST.Ind55.q
110	GGIO1.ST.Ind55.stVal
111	GGIO1.ST.Ind56.q
112	GGIO1.ST.Ind56.stVal
113	GGIO1.ST.Ind57.q
114	GGIO1.ST.Ind57.stVal
115	GGIO1.ST.Ind58.q
116	GGIO1.ST.Ind58.stVal
117	GGIO1.ST.Ind59.q
118	GGIO1.ST.Ind59.stVal
119	GGIO1.ST.Ind60.q
120	GGIO1.ST.Ind60.stVal
121	GGIO1.ST.Ind61.q
122	GGIO1.ST.Ind61.stVal
123	GGIO1.ST.Ind62.q
124	GGIO1.ST.Ind62.stVal
125	GGIO1.ST.Ind63.q
126	GGIO1.ST.Ind63.stVal
127	GGIO1.ST.Ind64.q
128	GGIO1.ST.Ind64.stVal
129	GGIO1.ST.Ind65.q
130	GGIO1.ST.Ind65.stVal
131	GGIO1.ST.Ind66.q
132	GGIO1.ST.Ind66.stVal

Enumeration	GOOSE dataset items
133	GGIO1.ST.Ind67.q
134	GGIO1.ST.Ind67.stVal
135	GGIO1.ST.Ind68.q
136	GGIO1.ST.Ind68.stVal
137	GGIO1.ST.Ind69.q
138	GGIO1.ST.Ind69.stVal
139	GGIO1.ST.Ind70.q
140	GGIO1.ST.Ind70.stVal
141	GGIO1.ST.Ind71.q
142	GGIO1.ST.Ind71.stVal
143	GGIO1.ST.Ind72.q
144	GGIO1.ST.Ind72.stVal
145	GGIO1.ST.Ind73.q
146	GGIO1.ST.Ind73.stVal
147	GGIO1.ST.Ind74.q
148	GGIO1.ST.Ind74.stVal
149	GGIO1.ST.Ind75.q
150	GGIO1.ST.Ind75.stVal
151	GGIO1.ST.Ind76.q
152	GGIO1.ST.Ind76.stVal
153	GGIO1.ST.Ind77.q
154	GGIO1.ST.Ind77.stVal
155	GGIO1.ST.Ind78.q
156	GGIO1.ST.Ind78.stVal
157	GGIO1.ST.Ind79.q
158	GGIO1.ST.Ind79.stVal
159	GGIO1.ST.Ind80.q
160	GGIO1.ST.Ind80.stVal
161	GGIO1.ST.Ind81.q
162	GGIO1.ST.Ind81.stVal
163	GGIO1.ST.Ind82.q
164	GGIO1.ST.Ind82.stVal
165	GGIO1.ST.Ind83.q
166	GGIO1.ST.Ind83.stVal
167	GGIO1.ST.Ind84.q
168	GGIO1.ST.Ind84.stVal
169	GGIO1.ST.Ind85.q
170	GGIO1.ST.Ind85.stVal
171	GGIO1.ST.Ind86.q
172	GGIO1.ST.Ind86.stVal
173	GGIO1.ST.Ind87.q
174	GGIO1.ST.Ind87.stVal
175	GGIO1.ST.Ind88.q
176	GGIO1.ST.Ind88.stVal
177	GGIO1.ST.Ind89.q
178	GGIO1.ST.Ind89.stVal
179	GGIO1.ST.Ind90.q
180	GGIO1.ST.Ind90.stVal
181	GGIO1.ST.Ind91.q
182	GGIO1.ST.Ind91.stVal
183	GGIO1.ST.Ind92.q
184	GGIO1.ST.Ind92.stVal
185	GGIO1.ST.Ind93.q

Enumeration	GOOSE dataset items
186	GGIO1.ST.Ind93.stVal
187	GGIO1.ST.Ind94.q
188	GGIO1.ST.Ind94.stVal
189	GGIO1.ST.Ind95.q
190	GGIO1.ST.Ind95.stVal
191	GGIO1.ST.Ind96.q
192	GGIO1.ST.Ind96.stVal
193	GGIO1.ST.Ind97.q
194	GGIO1.ST.Ind97.stVal
195	GGIO1.ST.Ind98.q
196	GGIO1.ST.Ind98.stVal
197	GGIO1.ST.Ind99.q
198	GGIO1.ST.Ind99.stVal
199	GGIO1.ST.Ind100.q
200	GGIO1.ST.Ind100.stVal
201	GGIO1.ST.Ind101.q
202	GGIO1.ST.Ind101.stVal
203	GGIO1.ST.Ind102.q
204	GGIO1.ST.Ind102.stVal
205	GGIO1.ST.Ind103.q
206	GGIO1.ST.Ind103.stVal
207	GGIO1.ST.Ind104.q
208	GGIO1.ST.Ind104.stVal
209	GGIO1.ST.Ind105.q
210	GGIO1.ST.Ind105.stVal
211	GGIO1.ST.Ind106.q
212	GGIO1.ST.Ind106.stVal
213	GGIO1.ST.Ind107.q
214	GGIO1.ST.Ind107.stVal
215	GGIO1.ST.Ind108.q
216	GGIO1.ST.Ind108.stVal
217	GGIO1.ST.Ind109.q
218	GGIO1.ST.Ind109.stVal
219	GGIO1.ST.Ind110.q
220	GGIO1.ST.Ind110.stVal
221	GGIO1.ST.Ind111.q
222	GGIO1.ST.Ind111.stVal
223	GGIO1.ST.Ind112.q
224	GGIO1.ST.Ind112.stVal
225	GGIO1.ST.Ind113.q
226	GGIO1.ST.Ind113.stVal
227	GGIO1.ST.Ind114.q
228	GGIO1.ST.Ind114.stVal
229	GGIO1.ST.Ind115.q
230	GGIO1.ST.Ind115.stVal
231	GGIO1.ST.Ind116.q
232	GGIO1.ST.Ind116.stVal
233	GGIO1.ST.Ind117.q
234	GGIO1.ST.Ind117.stVal
235	GGIO1.ST.Ind118.q
236	GGIO1.ST.Ind118.stVal
237	GGIO1.ST.Ind119.q
238	GGIO1.ST.Ind119.stVal

Enumeration	GOOSE dataset items
239	GGIO1.ST.Ind120.q
240	GGIO1.ST.Ind120.stVal
241	GGIO1.ST.Ind121.q
242	GGIO1.ST.Ind121.stVal
243	GGIO1.ST.Ind122.q
244	GGIO1.ST.Ind122.stVal
245	GGIO1.ST.Ind123.q
246	GGIO1.ST.Ind123.stVal
247	GGIO1.ST.Ind124.q
248	GGIO1.ST.Ind124.stVal
249	GGIO1.ST.Ind125.q
250	GGIO1.ST.Ind125.stVal
251	GGIO1.ST.Ind126.q
252	GGIO1.ST.Ind126.stVal
253	GGIO1.ST.Ind127.q
254	GGIO1.ST.Ind127.stVal
255	GGIO1.ST.Ind128.q
256	GGIO1.ST.Ind128.stVal
257	MMXU1.MX.TotW.mag.f
258	MMXU1.MX.TotVAr.mag.f
259	MMXU1.MX.TotVA.mag.f
260	MMXU1.MX.TotPF.mag.f
261	MMXU1.MX.Hz.mag.f
262	MMXU1.MX.PPV.phsAB.cVal.mag.f
263	MMXU1.MX.PPV.phsAB.cVal.ang.f
264	MMXU1.MX.PPV.phsBC.cVal.mag.f
265	MMXU1.MX.PPV.phsBC.cVal.ang.f
266	MMXU1.MX.PPV.phsCA.cVal.mag.f
267	MMXU1.MX.PPV.phsCA.cVal.ang.f
268	MMXU1.MX.PhV.phsA.cVal.mag.f
269	MMXU1.MX.PhV.phsA.cVal.ang.f
270	MMXU1.MX.PhV.phsB.cVal.mag.f
271	MMXU1.MX.PhV.phsB.cVal.ang.f
272	MMXU1.MX.PhV.phsC.cVal.mag.f
273	MMXU1.MX.PhV.phsC.cVal.ang.f
274	MMXU1.MX.A.phsA.cVal.mag.f
275	MMXU1.MX.A.phsA.cVal.ang.f
276	MMXU1.MX.A.phsB.cVal.mag.f
277	MMXU1.MX.A.phsB.cVal.ang.f
278	MMXU1.MX.A.phsC.cVal.mag.f
279	MMXU1.MX.A.phsC.cVal.ang.f
280	MMXU1.MX.A.neut.cVal.mag.f
281	MMXU1.MX.A.neut.cVal.ang.f
282	MMXU1.MX.W.phsA.cVal.mag.f
283	MMXU1.MX.W.phsB.cVal.mag.f
284	MMXU1.MX.W.phsC.cVal.mag.f
285	MMXU1.MX.VAr.phsA.cVal.mag.f
286	MMXU1.MX.VAr.phsB.cVal.mag.f
287	MMXU1.MX.VAr.phsC.cVal.mag.f
288	MMXU1.MX.VA.phsA.cVal.mag.f
289	MMXU1.MX.VA.phsB.cVal.mag.f
290	MMXU1.MX.VA.phsC.cVal.mag.f
291	MMXU1.MX.PF.phsA.cVal.mag.f

Enumeration	GOOSE dataset items
292	MMXU1.MX.PF.phsB.cVal.mag.f
293	MMXU1.MX.PF.phsC.cVal.mag.f
294	MMXU2.MX.TotW.mag.f
295	MMXU2.MX.TotVAr.mag.f
296	MMXU2.MX.TotVA.mag.f
297	MMXU2.MX.TotPF.mag.f
298	MMXU2.MX.Hz.mag.f
299	MMXU2.MX.PPV.phsAB.cVal.mag.f
300	MMXU2.MX.PPV.phsAB.cVal.ang.f
301	MMXU2.MX.PPV.phsBC.cVal.mag.f
302	MMXU2.MX.PPV.phsBC.cVal.ang.f
303	MMXU2.MX.PPV.phsCA.cVal.mag.f
304	MMXU2.MX.PPV.phsCA.cVal.ang.f
305	MMXU2.MX.PhV.phsA.cVal.mag.f
306	MMXU2.MX.PhV.phsA.cVal.ang.f
307	MMXU2.MX.PhV.phsB.cVal.mag.f
308	MMXU2.MX.PhV.phsB.cVal.ang.f
309	MMXU2.MX.PhV.phsC.cVal.mag.f
310	MMXU2.MX.PhV.phsC.cVal.ang.f
311	MMXU2.MX.A.phsA.cVal.mag.f
312	MMXU2.MX.A.phsA.cVal.ang.f
313	MMXU2.MX.A.phsB.cVal.mag.f
314	MMXU2.MX.A.phsB.cVal.ang.f
315	MMXU2.MX.A.phsC.cVal.mag.f
316	MMXU2.MX.A.phsC.cVal.ang.f
317	MMXU2.MX.A.neut.cVal.mag.f
318	MMXU2.MX.A.neut.cVal.ang.f
319	MMXU2.MX.W.phsA.cVal.mag.f
320	MMXU2.MX.W.phsB.cVal.mag.f
321	MMXU2.MX.W.phsC.cVal.mag.f
322	MMXU2.MX.VAr.phsA.cVal.mag.f
323	MMXU2.MX.VAr.phsB.cVal.mag.f
324	MMXU2.MX.VAr.phsC.cVal.mag.f
325	MMXU2.MX.VA.phsA.cVal.mag.f
326	MMXU2.MX.VA.phsB.cVal.mag.f
327	MMXU2.MX.VA.phsC.cVal.mag.f
328	MMXU2.MX.PF.phsA.cVal.mag.f
329	MMXU2.MX.PF.phsB.cVal.mag.f
330	MMXU2.MX.PF.phsC.cVal.mag.f
331	MMXU3.MX.TotW.mag.f
332	MMXU3.MX.TotVAr.mag.f
333	MMXU3.MX.TotVA.mag.f
334	MMXU3.MX.TotPF.mag.f
335	MMXU3.MX.Hz.mag.f
336	MMXU3.MX.PPV.phsAB.cVal.mag.f
337	MMXU3.MX.PPV.phsAB.cVal.ang.f
338	MMXU3.MX.PPV.phsBC.cVal.mag.f
339	MMXU3.MX.PPV.phsBC.cVal.ang.f
340	MMXU3.MX.PPV.phsCA.cVal.mag.f
341	MMXU3.MX.PPV.phsCA.cVal.ang.f
342	MMXU3.MX.PhV.phsA.cVal.mag.f
343	MMXU3.MX.PhV.phsA.cVal.ang.f
344	MMXU3.MX.PhV.phsB.cVal.mag.f

Enumeration	GOOSE dataset items
345	MMXU3.MX.PhV.phsB.cVal.ang.f
346	MMXU3.MX.PhV.phsC.cVal.mag.f
347	MMXU3.MX.PhV.phsC.cVal.ang.f
348	MMXU3.MX.A.phsA.cVal.mag.f
349	MMXU3.MX.A.phsA.cVal.ang.f
350	MMXU3.MX.A.phsB.cVal.mag.f
351	MMXU3.MX.A.phsB.cVal.ang.f
352	MMXU3.MX.A.phsC.cVal.mag.f
353	MMXU3.MX.A.phsC.cVal.ang.f
354	MMXU3.MX.A.neut.cVal.mag.f
355	MMXU3.MX.A.neut.cVal.ang.f
356	MMXU3.MX.W.phsA.cVal.mag.f
357	MMXU3.MX.W.phsB.cVal.mag.f
358	MMXU3.MX.W.phsC.cVal.mag.f
359	MMXU3.MX.VAr.phsA.cVal.mag.f
360	MMXU3.MX.VAr.phsB.cVal.mag.f
361	MMXU3.MX.VAr.phsC.cVal.mag.f
362	MMXU3.MX.VA.phsA.cVal.mag.f
363	MMXU3.MX.VA.phsB.cVal.mag.f
364	MMXU3.MX.VA.phsC.cVal.mag.f
365	MMXU3.MX.PF.phsA.cVal.mag.f
366	MMXU3.MX.PF.phsB.cVal.mag.f
367	MMXU3.MX.PF.phsC.cVal.mag.f
368	MMXU4.MX.TotW.mag.f
369	MMXU4.MX.TotVAr.mag.f
370	MMXU4.MX.TotVA.mag.f
371	MMXU4.MX.TotPF.mag.f
372	MMXU4.MX.Hz.mag.f
373	MMXU4.MX.PPV.phsAB.cVal.mag.f
374	MMXU4.MX.PPV.phsAB.cVal.ang.f
375	MMXU4.MX.PPV.phsBC.cVal.mag.f
376	MMXU4.MX.PPV.phsBC.cVal.ang.f
377	MMXU4.MX.PPV.phsCA.cVal.mag.f
378	MMXU4.MX.PPV.phsCA.cVal.ang.f
379	MMXU4.MX.PhV.phsA.cVal.mag.f
380	MMXU4.MX.PhV.phsA.cVal.ang.f
381	MMXU4.MX.PhV.phsB.cVal.mag.f
382	MMXU4.MX.PhV.phsB.cVal.ang.f
383	MMXU4.MX.PhV.phsC.cVal.mag.f
384	MMXU4.MX.PhV.phsC.cVal.ang.f
385	MMXU4.MX.A.phsA.cVal.mag.f
386	MMXU4.MX.A.phsA.cVal.ang.f
387	MMXU4.MX.A.phsB.cVal.mag.f
388	MMXU4.MX.A.phsB.cVal.ang.f
389	MMXU4.MX.A.phsC.cVal.mag.f
390	MMXU4.MX.A.phsC.cVal.ang.f
391	MMXU4.MX.A.neut.cVal.mag.f
392	MMXU4.MX.A.neut.cVal.ang.f
393	MMXU4.MX.W.phsA.cVal.mag.f
394	MMXU4.MX.W.phsB.cVal.mag.f
395	MMXU4.MX.W.phsC.cVal.mag.f
396	MMXU4.MX.VAr.phsA.cVal.mag.f
397	MMXU4.MX.VAr.phsB.cVal.mag.f

Enumeration	GOOSE dataset items
398	MMXU4.MX.VAr.phsC.cVal.mag.f
399	MMXU4.MX.VA.phsA.cVal.mag.f
400	MMXU4.MX.VA.phsB.cVal.mag.f
401	MMXU4.MX.VA.phsC.cVal.mag.f
402	MMXU4.MX.PF.phsA.cVal.mag.f
403	MMXU4.MX.PF.phsB.cVal.mag.f
404	MMXU4.MX.PF.phsC.cVal.mag.f
405	MMXU5.MX.TotW.mag.f
406	MMXU5.MX.TotVAr.mag.f
407	MMXU5.MX.TotVA.mag.f
408	MMXU5.MX.TotPF.mag.f
409	MMXU5.MX.Hz.mag.f
410	MMXU5.MX.PPV.phsAB.cVal.mag.f
411	MMXU5.MX.PPV.phsAB.cVal.ang.f
412	MMXU5.MX.PPV.phsBC.cVal.mag.f
413	MMXU5.MX.PPV.phsBC.cVal.ang.f
414	MMXU5.MX.PPV.phsCA.cVal.mag.f
415	MMXU5.MX.PPV.phsCA.cVal.ang.f
416	MMXU5.MX.PhV.phsA.cVal.mag.f
417	MMXU5.MX.PhV.phsA.cVal.ang.f
418	MMXU5.MX.PhV.phsB.cVal.mag.f
419	MMXU5.MX.PhV.phsB.cVal.ang.f
420	MMXU5.MX.PhV.phsC.cVal.mag.f
421	MMXU5.MX.PhV.phsC.cVal.ang.f
422	MMXU5.MX.A.phsA.cVal.mag.f
423	MMXU5.MX.A.phsA.cVal.ang.f
424	MMXU5.MX.A.phsB.cVal.mag.f
425	MMXU5.MX.A.phsB.cVal.ang.f
426	MMXU5.MX.A.phsC.cVal.mag.f
427	MMXU5.MX.A.phsC.cVal.ang.f
428	MMXU5.MX.A.neut.cVal.mag.f
429	MMXU5.MX.A.neut.cVal.ang.f
430	MMXU5.MX.W.phsA.cVal.mag.f
431	MMXU5.MX.W.phsB.cVal.mag.f
432	MMXU5.MX.W.phsC.cVal.mag.f
433	MMXU5.MX.VAr.phsA.cVal.mag.f
434	MMXU5.MX.VAr.phsB.cVal.mag.f
435	MMXU5.MX.VAr.phsC.cVal.mag.f
436	MMXU5.MX.VA.phsA.cVal.mag.f
437	MMXU5.MX.VA.phsB.cVal.mag.f
438	MMXU5.MX.VA.phsC.cVal.mag.f
439	MMXU5.MX.PF.phsA.cVal.mag.f
440	MMXU5.MX.PF.phsB.cVal.mag.f
441	MMXU5.MX.PF.phsC.cVal.mag.f
442	MMXU6.MX.TotW.mag.f
443	MMXU6.MX.TotVAr.mag.f
444	MMXU6.MX.TotVA.mag.f
445	MMXU6.MX.TotPF.mag.f
446	MMXU6.MX.Hz.mag.f
447	MMXU6.MX.PPV.phsAB.cVal.mag.f
448	MMXU6.MX.PPV.phsAB.cVal.ang.f
449	MMXU6.MX.PPV.phsBC.cVal.mag.f
450	MMXU6.MX.PPV.phsBC.cVal.ang.f

Enumeration	GOOSE dataset items
451	MMXU6.MX.PPV.phsCA.cVal.mag.f
452	MMXU6.MX.PPV.phsCA.cVal.ang.f
453	MMXU6.MX.PhV.phsA.cVal.mag.f
454	MMXU6.MX.PhV.phsA.cVal.ang.f
455	MMXU6.MX.PhV.phsB.cVal.mag.f
456	MMXU6.MX.PhV.phsB.cVal.ang.f
457	MMXU6.MX.PhV.phsC.cVal.mag.f
458	MMXU6.MX.PhV.phsC.cVal.ang.f
459	MMXU6.MX.A.phsA.cVal.mag.f
460	MMXU6.MX.A.phsA.cVal.ang.f
461	MMXU6.MX.A.phsB.cVal.mag.f
462	MMXU6.MX.A.phsB.cVal.ang.f
463	MMXU6.MX.A.phsC.cVal.mag.f
464	MMXU6.MX.A.phsC.cVal.ang.f
465	MMXU6.MX.A.neut.cVal.mag.f
466	MMXU6.MX.A.neut.cVal.ang.f
467	MMXU6.MX.W.phsA.cVal.mag.f
468	MMXU6.MX.W.phsB.cVal.mag.f
469	MMXU6.MX.W.phsC.cVal.mag.f
470	MMXU6.MX.VAr.phsA.cVal.mag.f
471	MMXU6.MX.VAr.phsB.cVal.mag.f
472	MMXU6.MX.VAr.phsC.cVal.mag.f
473	MMXU6.MX.VA.phsA.cVal.mag.f
474	MMXU6.MX.VA.phsB.cVal.mag.f
475	MMXU6.MX.VA.phsC.cVal.mag.f
476	MMXU6.MX.PF.phsA.cVal.mag.f
477	MMXU6.MX.PF.phsB.cVal.mag.f
478	MMXU6.MX.PF.phsC.cVal.mag.f
479	GGIO4.MX.AnIn1.mag.f
480	GGIO4.MX.AnIn2.mag.f
481	GGIO4.MX.AnIn3.mag.f
482	GGIO4.MX.AnIn4.mag.f
483	GGIO4.MX.AnIn5.mag.f
484	GGIO4.MX.AnIn6.mag.f
485	GGIO4.MX.AnIn7.mag.f
486	GGIO4.MX.AnIn8.mag.f
487	GGIO4.MX.AnIn9.mag.f
488	GGIO4.MX.AnIn10.mag.f
489	GGIO4.MX.AnIn11.mag.f
490	GGIO4.MX.AnIn12.mag.f
491	GGIO4.MX.AnIn13.mag.f
492	GGIO4.MX.AnIn14.mag.f
493	GGIO4.MX.AnIn15.mag.f
494	GGIO4.MX.AnIn16.mag.f
495	GGIO4.MX.AnIn17.mag.f
496	GGIO4.MX.AnIn18.mag.f
497	GGIO4.MX.AnIn19.mag.f
498	GGIO4.MX.AnIn20.mag.f
499	GGIO4.MX.AnIn21.mag.f
500	GGIO4.MX.AnIn22.mag.f
501	GGIO4.MX.AnIn23.mag.f
502	GGIO4.MX.AnIn24.mag.f
503	GGIO4.MX.AnIn25.mag.f

Enumeration	GOOSE dataset items
504	GGIO4.MX.AnIn26.mag.f
505	GGIO4.MX.AnIn27.mag.f
506	GGIO4.MX.AnIn28.mag.f
507	GGIO4.MX.AnIn29.mag.f
508	GGIO4.MX.AnIn30.mag.f
509	GGIO4.MX.AnIn31.mag.f
510	GGIO4.MX.AnIn32.mag.f
511	GGIO5.ST.UIntIn1.q
512	GGIO5.ST.UIntIn1.stVal
513	GGIO5.ST.UIntIn2.q
514	GGIO5.ST.UIntIn2.stVal
515	GGIO5.ST.UIntIn3.q
516	GGIO5.ST.UIntIn3.stVal
517	GGIO5.ST.UIntIn4.q
518	GGIO5.ST.UIntIn4.stVal
519	GGIO5.ST.UIntIn5.q
520	GGIO5.ST.UIntIn5.stVal
521	GGIO5.ST.UIntIn6.q
522	GGIO5.ST.UIntIn6.stVal
523	GGIO5.ST.UIntIn7.q
524	GGIO5.ST.UIntIn7.stVal
525	GGIO5.ST.UIntIn8.q
526	GGIO5.ST.UIntIn8.stVal
527	GGIO5.ST.UIntIn9.q
528	GGIO5.ST.UIntIn9.stVal
529	GGIO5.ST.UIntIn10.q
530	GGIO5.ST.UIntIn10.stVal
531	GGIO5.ST.UIntIn11.q
532	GGIO5.ST.UIntIn11.stVal
533	GGIO5.ST.UIntIn12.q
534	GGIO5.ST.UIntIn12.stVal
535	GGIO5.ST.UIntIn13.q
536	GGIO5.ST.UIntIn13.stVal
537	GGIO5.ST.UIntIn14.q
538	GGIO5.ST.UIntIn14.stVal
539	GGIO5.ST.UIntIn15.q
540	GGIO5.ST.UIntIn15.stVal
541	GGIO5.ST.UIntIn16.q
542	GGIO5.ST.UIntIn16.stVal
543	PDIF1.ST.Str.general
544	PDIF1.ST.Op.general
545	PDIF2.ST.Str.general
546	PDIF2.ST.Op.general
547	PDIF3.ST.Str.general
548	PDIF3.ST.Op.general
549	PDIF4.ST.Str.general
550	PDIF4.ST.Op.general
551	PDIS1.ST.Str.general
552	PDIS1.ST.Op.general
553	PDIS2.ST.Str.general
554	PDIS2.ST.Op.general
555	PDIS3.ST.Str.general
556	PDIS3.ST.Op.general

Enumeration	GOOSE dataset items
557	PDIS4.ST.Str.general
558	PDIS4.ST.Op.general
559	PDIS5.ST.Str.general
560	PDIS5.ST.Op.general
561	PDIS6.ST.Str.general
562	PDIS6.ST.Op.general
563	PDIS7.ST.Str.general
564	PDIS7.ST.Op.general
565	PDIS8.ST.Str.general
566	PDIS8.ST.Op.general
567	PDIS9.ST.Str.general
568	PDIS9.ST.Op.general
569	PDIS10.ST.Str.general
570	PDIS10.ST.Op.general
571	PIOC1.ST.Str.general
572	PIOC1.ST.Op.general
573	PIOC2.ST.Str.general
574	PIOC2.ST.Op.general
575	PIOC3.ST.Str.general
576	PIOC3.ST.Op.general
577	PIOC4.ST.Str.general
578	PIOC4.ST.Op.general
579	PIOC5.ST.Str.general
580	PIOC5.ST.Op.general
581	PIOC6.ST.Str.general
582	PIOC6.ST.Op.general
583	PIOC7.ST.Str.general
584	PIOC7.ST.Op.general
585	PIOC8.ST.Str.general
586	PIOC8.ST.Op.general
587	PIOC9.ST.Str.general
588	PIOC9.ST.Op.general
589	PIOC10.ST.Str.general
590	PIOC10.ST.Op.general
591	PIOC11.ST.Str.general
592	PIOC11.ST.Op.general
593	PIOC12.ST.Str.general
594	PIOC12.ST.Op.general
595	PIOC13.ST.Str.general
596	PIOC13.ST.Op.general
597	PIOC14.ST.Str.general
598	PIOC14.ST.Op.general
599	PIOC15.ST.Str.general
600	PIOC15.ST.Op.general
601	PIOC16.ST.Str.general
602	PIOC16.ST.Op.general
603	PIOC17.ST.Str.general
604	PIOC17.ST.Op.general
605	PIOC18.ST.Str.general
606	PIOC18.ST.Op.general
607	PIOC19.ST.Str.general
608	PIOC19.ST.Op.general
609	PIOC20.ST.Str.general

Enumeration	GOOSE dataset items
610	PIOC20.ST.Op.general
611	PIOC21.ST.Str.general
612	PIOC21.ST.Op.general
613	PIOC22.ST.Str.general
614	PIOC22.ST.Op.general
615	PIOC23.ST.Str.general
616	PIOC23.ST.Op.general
617	PIOC24.ST.Str.general
618	PIOC24.ST.Op.general
619	PIOC25.ST.Str.general
620	PIOC25.ST.Op.general
621	PIOC26.ST.Str.general
622	PIOC26.ST.Op.general
623	PIOC27.ST.Str.general
624	PIOC27.ST.Op.general
625	PIOC28.ST.Str.general
626	PIOC28.ST.Op.general
627	PIOC29.ST.Str.general
628	PIOC29.ST.Op.general
629	PIOC30.ST.Str.general
630	PIOC30.ST.Op.general
631	PIOC31.ST.Str.general
632	PIOC31.ST.Op.general
633	PIOC32.ST.Str.general
634	PIOC32.ST.Op.general
635	PIOC33.ST.Str.general
636	PIOC33.ST.Op.general
637	PIOC34.ST.Str.general
638	PIOC34.ST.Op.general
639	PIOC35.ST.Str.general
640	PIOC35.ST.Op.general
641	PIOC36.ST.Str.general
642	PIOC36.ST.Op.general
643	PIOC37.ST.Str.general
644	PIOC37.ST.Op.general
645	PIOC38.ST.Str.general
646	PIOC38.ST.Op.general
647	PIOC39.ST.Str.general
648	PIOC39.ST.Op.general
649	PIOC40.ST.Str.general
650	PIOC40.ST.Op.general
651	PIOC41.ST.Str.general
652	PIOC41.ST.Op.general
653	PIOC42.ST.Str.general
654	PIOC42.ST.Op.general
655	PIOC43.ST.Str.general
656	PIOC43.ST.Op.general
657	PIOC44.ST.Str.general
658	PIOC44.ST.Op.general
659	PIOC45.ST.Str.general
660	PIOC45.ST.Op.general
661	PIOC46.ST.Str.general
662	PIOC46.ST.Op.general

Enumeration	GOOSE dataset items
663	PIOC47.ST.Str.general
664	PIOC47.ST.Op.general
665	PIOC48.ST.Str.general
666	PIOC48.ST.Op.general
667	PIOC49.ST.Str.general
668	PIOC49.ST.Op.general
669	PIOC50.ST.Str.general
670	PIOC50.ST.Op.general
671	PIOC51.ST.Str.general
672	PIOC51.ST.Op.general
673	PIOC52.ST.Str.general
674	PIOC52.ST.Op.general
675	PIOC53.ST.Str.general
676	PIOC53.ST.Op.general
677	PIOC54.ST.Str.general
678	PIOC54.ST.Op.general
679	PIOC55.ST.Str.general
680	PIOC55.ST.Op.general
681	PIOC56.ST.Str.general
682	PIOC56.ST.Op.general
683	PIOC57.ST.Str.general
684	PIOC57.ST.Op.general
685	PIOC58.ST.Str.general
686	PIOC58.ST.Op.general
687	PIOC59.ST.Str.general
688	PIOC59.ST.Op.general
689	PIOC60.ST.Str.general
690	PIOC60.ST.Op.general
691	PIOC61.ST.Str.general
692	PIOC61.ST.Op.general
693	PIOC62.ST.Str.general
694	PIOC62.ST.Op.general
695	PIOC63.ST.Str.general
696	PIOC63.ST.Op.general
697	PIOC64.ST.Str.general
698	PIOC64.ST.Op.general
699	PIOC65.ST.Str.general
700	PIOC65.ST.Op.general
701	PIOC66.ST.Str.general
702	PIOC66.ST.Op.general
703	PIOC67.ST.Str.general
704	PIOC67.ST.Op.general
705	PIOC68.ST.Str.general
706	PIOC68.ST.Op.general
707	PIOC69.ST.Str.general
708	PIOC69.ST.Op.general
709	PIOC70.ST.Str.general
710	PIOC70.ST.Op.general
711	PIOC71.ST.Str.general
712	PIOC71.ST.Op.general
713	PIOC72.ST.Str.general
714	PIOC72.ST.Op.general
715	PTOC1.ST.Str.general

Enumeration	GOOSE dataset items
716	PTOC1.ST.Op.general
717	PTOC2.ST.Str.general
718	PTOC2.ST.Op.general
719	PTOC3.ST.Str.general
720	PTOC3.ST.Op.general
721	PTOC4.ST.Str.general
722	PTOC4.ST.Op.general
723	PTOC5.ST.Str.general
724	PTOC5.ST.Op.general
725	PTOC6.ST.Str.general
726	PTOC6.ST.Op.general
727	PTOC7.ST.Str.general
728	PTOC7.ST.Op.general
729	PTOC8.ST.Str.general
730	PTOC8.ST.Op.general
731	PTOC9.ST.Str.general
732	PTOC9.ST.Op.general
733	PTOC10.ST.Str.general
734	PTOC10.ST.Op.general
735	PTOC11.ST.Str.general
736	PTOC11.ST.Op.general
737	PTOC12.ST.Str.general
738	PTOC12.ST.Op.general
739	PTOC13.ST.Str.general
740	PTOC13.ST.Op.general
741	PTOC14.ST.Str.general
742	PTOC14.ST.Op.general
743	PTOC15.ST.Str.general
744	PTOC15.ST.Op.general
745	PTOC16.ST.Str.general
746	PTOC16.ST.Op.general
747	PTOC17.ST.Str.general
748	PTOC17.ST.Op.general
749	PTOC18.ST.Str.general
750	PTOC18.ST.Op.general
751	PTOC19.ST.Str.general
752	PTOC19.ST.Op.general
753	PTOC20.ST.Str.general
754	PTOC20.ST.Op.general
755	PTOC21.ST.Str.general
756	PTOC21.ST.Op.general
757	PTOC22.ST.Str.general
758	PTOC22.ST.Op.general
759	PTOC23.ST.Str.general
760	PTOC23.ST.Op.general
761	PTOC24.ST.Str.general
762	PTOC24.ST.Op.general
763	PTOV1.ST.Str.general
764	PTOV1.ST.Op.general
765	PTOV2.ST.Str.general
766	PTOV2.ST.Op.general
767	PTOV3.ST.Str.general
768	PTOV3.ST.Op.general

Enumeration	GOOSE dataset items
769	PTOV4.ST.Str.general
770	PTOV4.ST.Op.general
771	PTOV5.ST.Str.general
772	PTOV5.ST.Op.general
773	PTOV6.ST.Str.general
774	PTOV6.ST.Op.general
775	PTOV7.ST.Str.general
776	PTOV7.ST.Op.general
777	PTOV8.ST.Str.general
778	PTOV8.ST.Op.general
779	PTOV9.ST.Str.general
780	PTOV9.ST.Op.general
781	PTOV10.ST.Str.general
782	PTOV10.ST.Op.general
783	PTRC1.ST.Tr.general
784	PTRC1.ST.Op.general
785	PTRC2.ST.Tr.general
786	PTRC2.ST.Op.general
787	PTRC3.ST.Tr.general
788	PTRC3.ST.Op.general
789	PTRC4.ST.Tr.general
790	PTRC4.ST.Op.general
791	PTRC5.ST.Tr.general
792	PTRC5.ST.Op.general
793	PTRC6.ST.Tr.general
794	PTRC6.ST.Op.general
795	PTUV1.ST.Str.general
796	PTUV1.ST.Op.general
797	PTUV2.ST.Str.general
798	PTUV2.ST.Op.general
799	PTUV3.ST.Str.general
800	PTUV3.ST.Op.general
801	PTUV4.ST.Str.general
802	PTUV4.ST.Op.general
803	PTUV5.ST.Str.general
804	PTUV5.ST.Op.general
805	PTUV6.ST.Str.general
806	PTUV6.ST.Op.general
807	PTUV7.ST.Str.general
808	PTUV7.ST.Op.general
809	PTUV8.ST.Str.general
810	PTUV8.ST.Op.general
811	PTUV9.ST.Str.general
812	PTUV9.ST.Op.general
813	PTUV10.ST.Str.general
814	PTUV10.ST.Op.general
815	PTUV11.ST.Str.general
816	PTUV11.ST.Op.general
817	PTUV12.ST.Str.general
818	PTUV12.ST.Op.general
819	PTUV13.ST.Str.general
820	PTUV13.ST.Op.general
821	RBRF1.ST.OpEx.general

Enumeration	GOOSE dataset items
822	RBRF1.ST.OpIn.general
823	RBRF2.ST.OpEx.general
824	RBRF2.ST.OpIn.general
825	RBRF3.ST.OpEx.general
826	RBRF3.ST.OpIn.general
827	RBRF4.ST.OpEx.general
828	RBRF4.ST.OpIn.general
829	RBRF5.ST.OpEx.general
830	RBRF5.ST.OpIn.general
831	RBRF6.ST.OpEx.general
832	RBRF6.ST.OpIn.general
833	RBRF7.ST.OpEx.general
834	RBRF7.ST.OpIn.general
835	RBRF8.ST.OpEx.general
836	RBRF8.ST.OpIn.general
837	RBRF9.ST.OpEx.general
838	RBRF9.ST.OpIn.general
839	RBRF10.ST.OpEx.general
840	RBRF10.ST.OpIn.general
841	RBRF11.ST.OpEx.general
842	RBRF11.ST.OpIn.general
843	RBRF12.ST.OpEx.general
844	RBRF12.ST.OpIn.general
845	RBRF13.ST.OpEx.general
846	RBRF13.ST.OpIn.general
847	RBRF14.ST.OpEx.general
848	RBRF14.ST.OpIn.general
849	RBRF15.ST.OpEx.general
850	RBRF15.ST.OpIn.general
851	RBRF16.ST.OpEx.general
852	RBRF16.ST.OpIn.general
853	RBRF17.ST.OpEx.general
854	RBRF17.ST.OpIn.general
855	RBRF18.ST.OpEx.general
856	RBRF18.ST.OpIn.general
857	RBRF19.ST.OpEx.general
858	RBRF19.ST.OpIn.general
859	RBRF20.ST.OpEx.general
860	RBRF20.ST.OpIn.general
861	RBRF21.ST.OpEx.general
862	RBRF21.ST.OpIn.general
863	RBRF22.ST.OpEx.general
864	RBRF22.ST.OpIn.general
865	RBRF23.ST.OpEx.general
866	RBRF23.ST.OpIn.general
867	RBRF24.ST.OpEx.general
868	RBRF24.ST.OpIn.general
869	RFLO1.MX.FltDiskm.mag.f
870	RFLO2.MX.FltDiskm.mag.f
871	RFLO3.MX.FltDiskm.mag.f
872	RFLO4.MX.FltDiskm.mag.f
873	RFLO5.MX.FltDiskm.mag.f
874	RPSB1.ST.Str.general

Enumeration	GOOSE dataset items
875	RPSB1.ST.Op.general
876	RPSB1.ST.BlkZn.stVal
877	RREC1.ST.Op.general
878	RREC1.ST.AutoRecSt.stVal
879	RREC2.ST.Op.general
880	RREC2.ST.AutoRecSt.stVal
881	RREC3.ST.Op.general
882	RREC3.ST.AutoRecSt.stVal
883	RREC4.ST.Op.general
884	RREC4.ST.AutoRecSt.stVal
885	RREC5.ST.Op.general
886	RREC5.ST.AutoRecSt.stVal
887	RREC6.ST.Op.general
888	RREC6.ST.AutoRecSt.stVal
889	CSWI1.ST.Loc.stVal
890	CSWI1.ST.Pos.stVal
891	CSWI2.ST.Loc.stVal
892	CSWI2.ST.Pos.stVal
893	CSWI3.ST.Loc.stVal
894	CSWI3.ST.Pos.stVal
895	CSWI4.ST.Loc.stVal
896	CSWI4.ST.Pos.stVal
897	CSWI5.ST.Loc.stVal
898	CSWI5.ST.Pos.stVal
899	CSWI6.ST.Loc.stVal
900	CSWI6.ST.Pos.stVal
901	CSWI7.ST.Loc.stVal
902	CSWI7.ST.Pos.stVal
903	CSWI8.ST.Loc.stVal
904	CSWI8.ST.Pos.stVal
905	CSWI9.ST.Loc.stVal
906	CSWI9.ST.Pos.stVal
907	CSWI10.ST.Loc.stVal
908	CSWI10.ST.Pos.stVal
909	CSWI11.ST.Loc.stVal
910	CSWI11.ST.Pos.stVal
911	CSWI12.ST.Loc.stVal
912	CSWI12.ST.Pos.stVal
913	CSWI13.ST.Loc.stVal
914	CSWI13.ST.Pos.stVal
915	CSWI14.ST.Loc.stVal
916	CSWI14.ST.Pos.stVal
917	CSWI15.ST.Loc.stVal
918	CSWI15.ST.Pos.stVal
919	CSWI16.ST.Loc.stVal
920	CSWI16.ST.Pos.stVal
921	CSWI17.ST.Loc.stVal
922	CSWI17.ST.Pos.stVal
923	CSWI18.ST.Loc.stVal
924	CSWI18.ST.Pos.stVal
925	CSWI19.ST.Loc.stVal
926	CSWI19.ST.Pos.stVal
927	CSWI20.ST.Loc.stVal

Enumeration	GOOSE dataset items
928	CSWI20.ST.Pos.stVal
929	CSWI21.ST.Loc.stVal
930	CSWI21.ST.Pos.stVal
931	CSWI22.ST.Loc.stVal
932	CSWI22.ST.Pos.stVal
933	CSWI23.ST.Loc.stVal
934	CSWI23.ST.Pos.stVal
935	CSWI24.ST.Loc.stVal
936	CSWI24.ST.Pos.stVal
937	CSWI25.ST.Loc.stVal
938	CSWI25.ST.Pos.stVal
939	CSWI26.ST.Loc.stVal
940	CSWI26.ST.Pos.stVal
941	CSWI27.ST.Loc.stVal
942	CSWI27.ST.Pos.stVal
943	CSWI28.ST.Loc.stVal
944	CSWI28.ST.Pos.stVal
945	CSWI29.ST.Loc.stVal
946	CSWI29.ST.Pos.stVal
947	CSWI30.ST.Loc.stVal
948	CSWI30.ST.Pos.stVal
949	XSWI1.ST.Loc.stVal
950	XSWI1.ST.Pos.stVal
951	XSWI2.ST.Loc.stVal
952	XSWI2.ST.Pos.stVal
953	XSWI3.ST.Loc.stVal
954	XSWI3.ST.Pos.stVal
955	XSWI4.ST.Loc.stVal
956	XSWI4.ST.Pos.stVal
957	XSWI5.ST.Loc.stVal
958	XSWI5.ST.Pos.stVal
959	XSWI6.ST.Loc.stVal
960	XSWI6.ST.Pos.stVal
961	XSWI7.ST.Loc.stVal
962	XSWI7.ST.Pos.stVal
963	XSWI8.ST.Loc.stVal
964	XSWI8.ST.Pos.stVal
965	XSWI9.ST.Loc.stVal
966	XSWI9.ST.Pos.stVal
967	XSWI10.ST.Loc.stVal
968	XSWI10.ST.Pos.stVal
969	XSWI11.ST.Loc.stVal
970	XSWI11.ST.Pos.stVal
971	XSWI12.ST.Loc.stVal
972	XSWI12.ST.Pos.stVal
973	XSWI13.ST.Loc.stVal
974	XSWI13.ST.Pos.stVal
975	XSWI14.ST.Loc.stVal
976	XSWI14.ST.Pos.stVal
977	XSWI15.ST.Loc.stVal
978	XSWI15.ST.Pos.stVal
979	XSWI16.ST.Loc.stVal
980	XSWI16.ST.Pos.stVal

Enumeration	GOOSE dataset items
981	XSWI17.ST.Loc.stVal
982	XSWI17.ST.Pos.stVal
983	XSWI18.ST.Loc.stVal
984	XSWI18.ST.Pos.stVal
985	XSWI19.ST.Loc.stVal
986	XSWI19.ST.Pos.stVal
987	XSWI20.ST.Loc.stVal
988	XSWI20.ST.Pos.stVal
989	XSWI21.ST.Loc.stVal
990	XSWI21.ST.Pos.stVal
991	XSWI22.ST.Loc.stVal
992	XSWI22.ST.Pos.stVal
993	XSWI23.ST.Loc.stVal
994	XSWI23.ST.Pos.stVal
995	XSWI24.ST.Loc.stVal
996	XSWI24.ST.Pos.stVal
997	XCBR1.ST.Loc.stVal
998	XCBR1.ST.Pos.stVal
999	XCBR2.ST.Loc.stVal
1000	XCBR2.ST.Pos.stVal
1001	XCBR3.ST.Loc.stVal
1002	XCBR3.ST.Pos.stVal
1003	XCBR4.ST.Loc.stVal
1004	XCBR4.ST.Pos.stVal
1005	XCBR5.ST.Loc.stVal
1006	XCBR5.ST.Pos.stVal
1007	XCBR6.ST.Loc.stVal
1008	XCBR6.ST.Pos.stVal

F617
ENUMERATION: LOGIN ROLES

Enumeration	Role
0	None
1	Administrator
2	Supervisor
3	Engineer
4	Operator
5	Factory

F618
BITFIED: SECURITY STATUS INDICATOR

Has been activated, whether the password has been set.

1 = Bit#0, Administrator password was set. The list is continued for all other roles (Engineer = bit#2, Operator = bit#3, Observer = bit#3).

F619
ENUMERATION: RADIUS AUTHENTICATION METHOD

0 = EAP-TTLS

F621
ENUMERATION: MODBUS LOGIN ROLES

Enumeration	Role
0	None
1	Administrator
2	Supervisor
3	Engineer
4	Operator
5	Observer

F623
ENUMERATION: REAL-TIME CLOCK SYNCHRONIZING SOURCE CONFIGURATION

Enumeration	Item
0	None
1	PP/IRIG-B/PTP/SNTP
2	IRIG-B/PP/PTP/SNTP
3	PP/PTP/IRIG-B/SNTP

F624
ENUMERATION: REAL-TIME CLOCK SYNCHRONZING SOURCE ACTUALS

Enumeration	Item
0	None
1	Port 1 PTP Clock
2	Port 2 PTP Clock
3	Port 3 PTP Clock
4	IRIG-B
5	SNTP

F625
ENUMERATION: PTP STATE

Enumeration	Item
0	Disabled
1	No Signal
2	Calibrating
3	Synchronized
4	Synchronized (No PDelay)

F626
ENUMERATION: NETWORK PORT FOR REMOTE DEVICE

Enumeration	Item
0	None
1	Network Port 1
2	Network Port 2
3	Network Port 3

F627
ENUMERATION: REDUNDANCY MODE

Enumeration	Item
0	None
1	Failover
2	PRP

F628
ENUMERATION: SECURITY BYPASS ACCESS

Disables security on local access, remote access, or both.

Enumeration	Item
0	Disabled
1	Local and Remote
2	Local
3	Remote

F629
ENUMERATION: SCADA PROTOCOL

0 = DNP 3.0, 1 = IEC 60870-5-104, 2 = IEC 60870-5-103

F630
ENUMERATION: IEC 103 ASDU TYPE

0 = 3, 1 = 9

F631
ENUMERATION: VIRTUAL INPUTS FOR IEC 103

Enumeration	Item
0	OFF
1	Virtual Input 1
2	Virtual Input 2
3	Virtual Input 3
↓	↓
64	Virtual Input 64

C.1.1 INTRODUCTION

The IEC 61850 standard is the result of electric utilities and vendors of electronic equipment to produce standardized communications systems. IEC 61850 is a series of standards describing client/server and peer-to-peer communications, substation design and configuration, testing, environmental and project standards. The complete set includes:

- IEC 61850-1: Introduction and overview
- IEC 61850-2: Glossary
- IEC 61850-3: General requirements
- IEC 61850-4: System and project management
- IEC 61850-5: Communications and requirements for functions and device models
- IEC 61850-6: Configuration description language for communication in electrical substations related to IEDs
- IEC 61850-7-1: Basic communication structure for substation and feeder equipment - Principles and models
- IEC 61850-7-2: Basic communication structure for substation and feeder equipment - Abstract communication service interface (ACSI)
- IEC 61850-7-3: Basic communication structure for substation and feeder equipment – Common data classes
- IEC 61850-7-4: Basic communication structure for substation and feeder equipment – Compatible logical node classes and data classes
- IEC 61850-8-1: Specific Communication Service Mapping (SCSM) – Mappings to MMS (ISO 9506-1 and ISO 9506-2) and to ISO/IEC 8802-3
- IEC 61850-9-1: Specific Communication Service Mapping (SCSM) – Sampled values over serial unidirectional multidrop point to point link
- IEC 61850-9-2: Specific Communication Service Mapping (SCSM) – Sampled values over ISO/IEC 8802-3
- IEC 61850-10: Conformance testing

These documents can be obtained from the IEC (http://www.iec.ch). It is strongly recommended that all those involved with any IEC 61850 implementation obtain this document set.

C.1.2 COMMUNICATION PROFILES

IEC 61850 specifies the use of the Manufacturing Message Specification (MMS) at the upper (application) layer for transfer of real-time data. This protocol has been in existence for several of years and provides a set of services suitable for the transfer of data within a substation LAN environment. Actual MMS protocol services are mapped to IEC 61850 abstract services in IEC 61850-8-1.

The C70 relay supports IEC 61850 server services over TCP/IP. The TCP/IP profile requires the C70 to have an IP address to establish communications. These addresses are located in the **SETTINGS** ⇨ **PRODUCT SETUP** ⇨⇩ **COMMUNICATIONS** ⇨⇩ **NETWORK** menu. It is possible to have up to five simultaneous connections (in addition to DNP and Modbus/TCP (non-IEC 61850) connections).

- **Client/server**: This is a connection-oriented type of communication. The connection is initiated by the client, and communication activity is controlled by the client. IEC 61850 clients are often substation computers running HMI programs or SOE logging software. Servers are usually substation equipment such as protection relays, meters, RTUs, transformer tap changers, or bay controllers.
- **Peer-to-peer**: This is a non-connection-oriented, high speed type of communication usually between substation equipment such as protection relays. GSSE and GOOSE are methods of peer-to-peer communication.
- **Substation configuration language (SCL)**: A substation configuration language is a number of files used to describe the configuration of substation equipment. Each configured device has an IEC Capability Description (ICD) file. The substation single line information is stored in a System Specification Description (SSD) file. The entire substation configuration is stored in a Substation Configuration Description (SCD) file. The SCD file is the combination of the individual ICD files and the SSD file.

C.1.3 FILE TRANSFER BY IEC 61850

The C70 supports file transfer by IEC 61850. The approach is as follows, using the SISCO AX-S4 61850 client software as an example.

1. In the AX-S4 61850 Explorer window, click the **Tools** menu and access the SISCO File Transfer Utility.
2. Select the **Remote AR Name** from the drop-down list. Available files appear in the **File Specification** area on the right side of the window.
3. With the **Copy** option active, select a file to transfer and click the **Go** button. The file is copied and displays in the **Local** list on the left side of the window.
4. Repeat the process to transfer any other files.

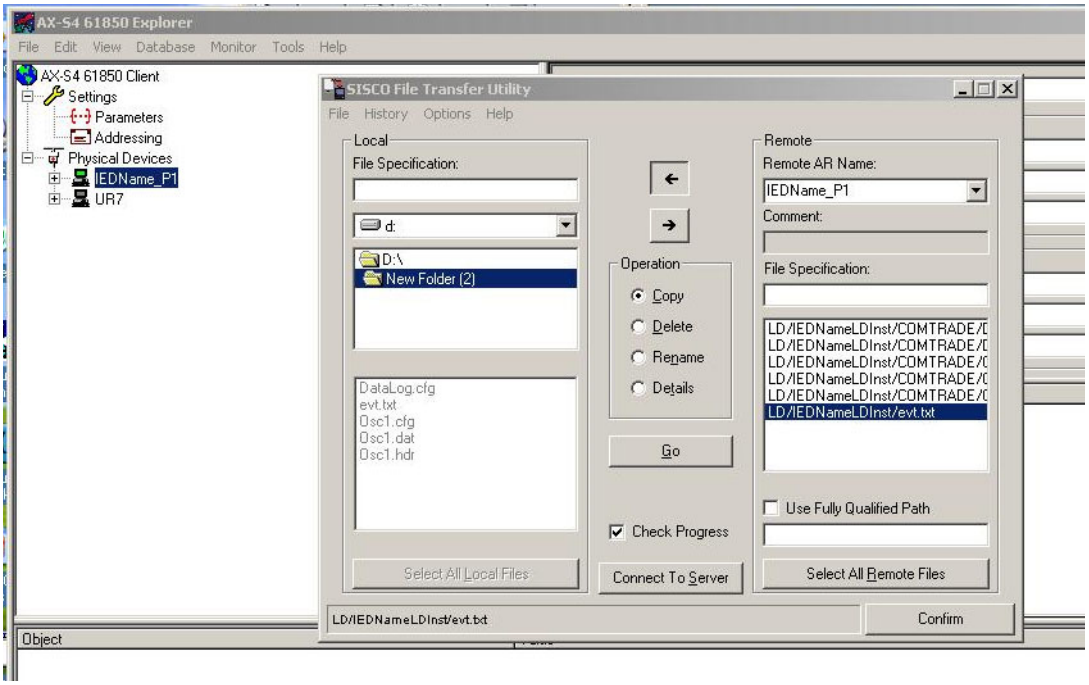

Figure C–1: FILE TRANSFER BY IEC 61850

C.2.1 OVERVIEW

IEC 61850 defines an object-oriented approach to data and services. An IEC 61850 *physical device* can contain one or more *logical device(s)*. Each logical device can contain many *logical nodes*. Each logical node can contain many *data objects*. Each data object is composed of *data attributes* and *data attribute components*. Services are available at each level for performing various functions, such as reading, writing, control commands, and reporting.

Each C70 IED represents one IEC 61850 physical device. The physical device contains one logical device, and the logical device contains many logical nodes. The logical node LPHD1 contains information about the C70 IED physical device. The logical node LLN0 contains information about the C70 IED logical device.

C.2.2 GGIO1: DIGITAL STATUS VALUES

The GGIO1 logical node is available in the C70 to provide access to as many 128 digital status points and associated timestamps and quality flags. The data content must be configured before the data can be used. GGIO1 provides digital status points for access by clients.

It is intended that clients use GGIO1 in order to access digital status values from the C70. Configuration settings are provided to allow the selection of the number of digital status indications available in GGIO1 (8 to 128), and to allow the choice of the C70 FlexLogic operands that drive the status of the GGIO1 status indications. Clients can utilize the IEC 61850 buffered and unbuffered reporting features available from GGIO1 in order to build sequence of events (SOE) logs and HMI display screens. Buffered reporting should generally be used for SOE logs since the buffering capability reduces the chances of missing data state changes. Unbuffered reporting should generally be used for local status display.

C.2.3 GGIO2: DIGITAL CONTROL VALUES

The GGIO2 logical node is available to provide access to the C70 virtual inputs. Virtual inputs are single-point control (binary) values that can be written by clients. They are generally used as control inputs. GGIO2 provides access to the virtual inputs through the IEC 61850 standard control model (ctlModel) services:

- Status only.
- Direct control with normal security.
- SBO control with normal security.

Configuration settings are available to select the control model for each point. Each virtual input used through GGIO2 should have its **VIRTUAL INPUT 1(64) FUNCTION** setting programmed as “Enabled” and its corresponding **GGIO2 CF SPSCO1(64) CTLMODEL** setting programmed to the appropriate control configuration.

C.2.4 GGIO3: DIGITAL STATUS AND ANALOG VALUES FROM GOOSE DATA

The GGIO3 logical node is available to provide access for clients to values received via configurable GOOSE messages. The values of the digital status indications and analog values in GGIO3 originate in GOOSE messages sent from other devices.

C.2.5 GGIO4: GENERIC ANALOG MEASURED VALUES

The GGIO4 logical node provides access to as many as 32 analog value points, as well as associated timestamps and quality flags. The data content must be configured before the data can be used. GGIO4 provides analog values for access by clients.

It is intended that clients use GGIO4 to access generic analog values from the C70. Configuration settings allow the selection of the number of analog values available in GGIO4 (4 to 32) and the choice of the FlexAnalog values that determine the value of the GGIO4 analog inputs. Clients can utilize polling or the IEC 61850 unbuffered reporting feature available from GGIO4 in order to obtain the analog values provided by GGIO4.

C.2.6 MMXU: ANALOG MEASURED VALUES

A limited number of measured analog values are available through the MMXU logical nodes.

Each MMXU logical node provides data from a C70 current and voltage source. There is one MMXU available for each configurable source (programmed in the **SETTINGS** ⇨⇩ **SYSTEM SETUP** ⇨⇩ **SIGNAL SOURCES** menu). MMXU1 provides data from C70 source 1, and MMXU2 provides data from C70 source 2.

MMXU data is provided in two forms: instantaneous and deadband. The instantaneous values are updated every time a read operation is performed by a client. The deadband values are calculated as described in IEC 61850 parts 7-1 and 7-3. The selection of appropriate deadband settings for the C70 is described in chapter 5 of this manual.

IEC 61850 buffered and unbuffered reporting capability is available in all MMXU logical nodes. MMXUx logical nodes provide the following data for each source:

- MMXU1.MX.TotW: three-phase real power
- MMXU1.MX.TotVAr: three-phase reactive power
- MMXU1.MX.TotVA: three-phase apparent power
- MMXU1.MX.TotPF: three-phase power factor
- MMXU1.MX.Hz: frequency
- MMXU1.MX.PPV.phsAB: phase AB voltage magnitude and angle
- MMXU1.MX.PPV.phsBC: phase BC voltage magnitude and angle
- MMXU1.MX.PPV.phsCA: Phase CA voltage magnitude and angle
- MMXU1.MX.PhV.phsA: phase AG voltage magnitude and angle
- MMXU1.MX.PhV.phsB: phase BG voltage magnitude and angle
- MMXU1.MX.PhV.phsC: phase CG voltage magnitude and angle
- MMXU1.MX.A.phsA: phase A current magnitude and angle
- MMXU1.MX.A.phsB: phase B current magnitude and angle
- MMXU1.MX.A.phsC: phase C current magnitude and angle
- MMXU1.MX.A.neut: ground current magnitude and angle
- MMXU1.MX.W.phsA: phase A real power
- MMXU1.MX.W.phsB: phase B real power
- MMXU1.MX.W.phsC: phase C real power
- MMXU1.MX.VAr.phsA: phase A reactive power
- MMXU1.MX.VAr.phsB: phase B reactive power
- MMXU1.MX.VAr.phsC: phase C reactive power
- MMXU1.MX.VA.phsA: phase A apparent power
- MMXU1.MX.VA.phsB: phase B apparent power
- MMXU1.MX.VA.phsC: phase C apparent power
- MMXU1.MX.PF.phsA: phase A power factor
- MMXU1.MX.PF.phsB: phase B power factor
- MMXU1.MX.PF.phsC: phase C power factor

C.2.7 PROTECTION AND OTHER LOGICAL NODES

The following list describes the protection elements for all UR-series relays. The C70 relay will contain a subset of protection elements from this list.

- PDIF: bus differential, transformer instantaneous differential, transformer percent differential, current differential

- PDIS: phase distance, ground distance
- PIOC: phase instantaneous overcurrent, neutral instantaneous overcurrent, ground instantaneous overcurrent, negative-sequence instantaneous overcurrent.
- PTOC: phase time overcurrent, neutral time overcurrent, ground time overcurrent, negative-sequence time overcurrent, neutral directional overcurrent, negative-sequence directional overcurrent
- PTUV: phase undervoltage, auxiliary undervoltage, third harmonic neutral undervoltage
- PTOV: phase overvoltage, neutral overvoltage, auxiliary overvoltage, negative sequence overvoltage
- RBRF: breaker failure
- RREC: autoreclosure
- RPSB: power swing detection
- RFLO: fault locator
- XCBR: breaker control
- XSWI: circuit switch
- CSWI: switch controller

The protection elements listed above contain *start* (pickup) and *operate* flags. For example, the start flag for PIOC1 is PIOC1.ST.Str.general. The operate flag for PIOC1 is PIOC1.ST.Op.general. For the C70 protection elements, these flags take their values from the pickup and operate FlexLogic operands for the corresponding element.

Some protection elements listed above contain directional start values. For example, the directional start value for PDIS1 is PDIS1.ST.Str.dirGeneral. This value is built from the directional FlexLogic operands for the element.

The RFLO logical node contains the measurement of the distance to fault calculation in kilometers. This value originates in the fault locator function.

The XCBR logical node is directly associated with the breaker control feature.

- XCBR1.ST.Loc: This is the state of the XCBR1 local/remote switch. A setting is provided to assign a FlexLogic operand to determine the state. When local mode is true, IEC 61850 client commands will be rejected.
- XCBR1.ST.Opcnt: This is an operation counter as defined in IEC 61850. Command settings are provided to allow the counter to be cleared.
- XCBR1.ST.Pos: This is the position of the breaker. The breaker control FlexLogic operands are used to determine this state.
  - Intermediate state (00) is indicated when the BREAKER 1 OPEN and BREAKER 1 CLOSED operands are both On.
  - Off state (01) is indicated when the BREAKER 1 OPEN operand is On.
  - On state (10) is indicated when the BREAKER 1 CLOSED operand is On.
  - Bad state (11) is indicated when the BREAKER 1 OPEN and BREAKER 1 CLOSED operands are Off.
- XCBR1.ST.BlkOpn: This is the state of the block open command logic. When true, breaker open commands from IEC 61850 clients will be rejected.
- XCBR1.ST.BlkCls: This is the state of the block close command logic. When true, breaker close commands from IEC 61850 clients will be rejected.
- XCBR1.CO.Pos: This is where IEC 61850 clients can issue open or close commands to the breaker. SBO control with normal security is the only supported IEC 61850 control model.
- XCBR1.CO.BlkOpn: This is where IEC 61850 clients can issue block open commands to the breaker. Direct control with normal security is the only supported IEC 61850 control model.
- XCBR1.CO.BlkCls: This is where IEC 61850 clients can issue block close commands to the breaker. Direct control with normal security is the only supported IEC 61850 control model.

C.3.1 BUFFERED/UNBUFFERED REPORTING

IEC 61850 buffered and unbuffered reporting is provided in the GGIO1 logical nodes (for binary status values) and MMXU1 to MMXU6 (for analog measured values). Report settings can be configured using an IEC 61850 client, substation configurator software, or via an IEC 61850 client. The following items can be configured:

- **TrgOps**: Trigger options. The following bits are supported by the C70:
  - Bit 1: data-change
  - Bit 4: integrity
  - Bit 5: general interrogation
- **OptFlds**: Option Fields. The following bits are supported by the C70:
  - Bit 1: sequence-number
  - Bit 2: report-time-stamp
  - Bit 3: reason-for-inclusion
  - Bit 4: data-set-name
  - Bit 5: data-reference
  - Bit 6: buffer-overflow (for buffered reports only)
  - Bit 7: entryID (for buffered reports only)
  - Bit 8: conf-revision
  - Bit 9: segmentation
- **IntgPd**: Integrity period.
- **BufTm**: Buffer time.

C.3.2 FILE TRANSFER

MMS file services are supported to allow transfer of oscillography, event record, or other files from a C70 relay.

C.3.3 TIMESTAMPS AND SCANNING

The timestamp values associated with all IEC 61850 data items represent the *time of the last change* of either the value or quality flags of the data item. To accomplish this functionality, all IEC 61850 data items must be regularly scanned for data changes, and the timestamp updated when a change is detected, regardless of the connection status of any IEC 61850 clients. For applications where there is no IEC 61850 client in use, the IEC 61850 **SERVER SCANNING** setting can be programmed as "Disabled". If a client is in use, this setting should be programmed as "Enabled" to ensure the proper generation of IEC 61850 timestamps.

C.3.4 LOGICAL DEVICE NAME

The logical device name is used to identify the IEC 61850 logical device that exists within the C70. This name is composed of two parts: the IED name setting and the logical device instance. The complete logical device name is the combination of the two character strings programmed in the **IEDNAME** and **LD INST** settings. The default values for these strings are "IEDName" and "LDInst". These values should be changed to reflect a logical naming convention for all IEC 61850 logical devices in the system.

C.3.5 LOCATION

The LPHD1 logical node contains a data attribute called *location* (LPHD1.DC.PhyNam.location). This is a character string meant to describe the physical location of the C70. This attribute is programmed through the **LOCATION** setting and its default value is "Location". This value should be changed to describe the actual physical location of the C70.

C.3.6 LOGICAL NODE NAME PREFIXES

IEC 61850 specifies that each logical node can have a name with a total length of 11 characters. The name is composed of:

- A five or six-character name prefix.
- A four-character standard name (for example, MMXU, GGIO, PIOC, etc.).
- A one or two-character instantiation index.

Complete names are of the form `xxxxxxPIOC1`, where the `xxxxxx` character string is configurable. Details regarding the logical node naming rules are given in IEC 61850 parts 6 and 7-2. It is recommended that a consistent naming convention be used for an entire substation project.

C.3.7 CONNECTION TIMING

A built-in TCP/IP connection timeout of two minutes is employed by the C70 to detect 'dead' connections. If there is no data traffic on a TCP connection for greater than two minutes, the connection will be aborted by the C70. This frees up the connection to be used by other clients. Therefore, when using IEC 61850 reporting, clients should configure report control block items such that an integrity report will be issued at least every two minutes (120000 ms). This ensures that the C70 will not abort the connection. If other MMS data is being polled on the same connection at least once every two minutes, this timeout will not apply.

C.3.8 NON-IEC 61850 DATA

The C70 relay makes available a number of non-IEC 61850 data items. These data items can be accessed through the "UR" MMS domain. IEC 61850 data can be accessed through the standard IEC 61850 logical device. To access the non-IEC data items, the **INCLUDE NON-IEC DATA** setting must be "Enabled".

C.3.9 COMMUNICATION SOFTWARE UTILITIES

The exact structure and values of the supported IEC 61850 logical nodes can be seen by connecting to a C70 relay with an MMS browser, such as the "MMS Object Explorer and AXS4-MMS" DDE/OPC server from Sisco Inc.

C.4.1 OVERVIEW

IEC 61850 specifies two types of peer-to-peer data transfer services: Generic Substation State Events (GSSE) and Generic Object Oriented Substation Events (GOOSE). GSSE services are compatible with UCA 2.0 GOOSE. IEC 61850 GOOSE services provide virtual LAN (VLAN) support, Ethernet priority tagging, and Ethertype Application ID configuration. The support for VLANs and priority tagging allows for the optimization of Ethernet network traffic. GOOSE messages can be given a higher priority than standard Ethernet traffic, and they can be separated onto specific VLANs. Because of the additional features of GOOSE services versus GSSE services, it is recommended that GOOSE be used wherever backwards compatibility with GSSE (or UCA 2.0 GOOSE) is not required.

Devices that transmit GSSE and/or GOOSE messages also function as servers. Each GSSE publisher contains a "GSSE control block" to configure and control the transmission. Each GOOSE publisher contains a "GOOSE control block" to configure and control the transmission. The transmission is also controlled via device settings. These settings can be seen in the ICD and/or SCD files, or in the device configuration software or files.

IEC 61850 recommends a default priority value of 4 for GOOSE. Ethernet traffic that does not contain a priority tag has a default priority of 1. More details are specified in IEC 61850 part 8-1.

IEC 61850 recommends that the Ethertype Application ID number be configured according to the GOOSE source. In the C70, the transmitted GOOSE Application ID number must match the configured receive Application ID number in the receiver. A common number may be used for all GOOSE transmitters in a system. More details are specified in IEC 61850 part 8-1.

C.4.2 GSSE CONFIGURATION

IEC 61850 Generic Substation Status Event (GSSE) communication is compatible with UCA GOOSE communication. GSSE messages contain a number of double point status data items. These items are transmitted in two pre-defined data structures named DNA and UserSt. Each DNA and UserSt item is referred to as a 'bit pair'. GSSE messages are transmitted in response to state changes in any of the data points contained in the message. GSSE messages always contain the same number of DNA and UserSt bit pairs. Depending the on the configuration, only some of these bit pairs may have values that are of interest to receiving devices.

The **GSSE FUNCTION**, **GSSE ID**, and **GSSE DESTINATION MAC ADDRESS** settings are used to configure GSSE transmission. **GSSE FUNCTION** is set to "Enabled" to enable the transmission. If a valid multicast Ethernet MAC address is entered for the **GSSE DESTINATION MAC ADDRESS** setting, this address will be used as the destination MAC address for GSSE messages. If a valid multicast Ethernet MAC address is not entered (for example, 00 00 00 00 00 00), the C70 will use the source Ethernet MAC address as the destination, with the multicast bit set.

C.4.3 FIXED GOOSE

The C70 supports two types of IEC 61850 Generic Object Oriented Substation Event (GOOSE) communication: fixed GOOSE and configurable GOOSE. All GOOSE messages contain IEC 61850 data collected into a *dataset*. It is this dataset that is transferred using GOOSE message services. The dataset transferred using the C70 fixed GOOSE is the same data that is transferred using the GSSE feature; that is, the DNA and UserSt bit pairs. The FlexLogic operands that determine the state of the DNA and UserSt bit pairs are configurable via settings, but the fixed GOOSE dataset always contains the same DNA/UserSt data structure. Upgrading from GSSE to GOOSE services is simply a matter of enabling fixed GOOSE and disabling GSSE. The remote inputs and outputs are configured in the same manner for both GSSE and fixed GOOSE.

It is recommended that the fixed GOOSE be used for implementations that require GOOSE data transfer between UR-series IEDs. Configurable GOOSE may be used for implementations that require GOOSE data transfer between UR-series IEDs and devices from other manufacturers.

C.4.4 CONFIGURABLE GOOSE

The configurable GOOSE feature allows for the configuration of the datasets to be transmitted or received from the C70. The C70 supports the configuration of eight transmission and reception datasets, allowing for the optimization of data transfer between devices.

Items programmed for dataset 1 and 2 will have changes in their status transmitted as soon as the change is detected. Dataset 1 should be used for high-speed transmission of data that is required for applications such as transfer tripping, blocking, and breaker fail initiate. At least one digital status value needs to be configured in dataset 1 to enable transmission of all data configured for dataset 1. Configuring analog data only to dataset 1 will not activate transmission.

Items programmed for datasets 3 through 8 will have changes in their status transmitted at a maximum rate of every 100 ms. Datasets 3 through 8 will regularly analyze each data item configured within them every 100 ms to identify if any changes have been made. If any changes in the data items are detected, these changes will be transmitted through a GOOSE message. If there are no changes detected during this 100 ms period, no GOOSE message will be sent.

For all datasets 1 through 8, the integrity GOOSE message will still continue to be sent at the pre-configured rate even if no changes in the data items are detected.

The GOOSE functionality was enhanced to prevent the relay from flooding a communications network with GOOSE messages due to an oscillation being created that is triggering a message.

The C70 has the ability of detecting if a data item in one of the GOOSE datasets is erroneously oscillating. This can be caused by events such as errors in logic programming, inputs improperly being asserted and de-asserted, or failed station components. If erroneously oscillation is detected, the C70 will stop sending GOOSE messages from the dataset for a minimum period of one second. Should the oscillation persist after the one second time-out period, the C70 will continue to block transmission of the dataset. The C70 will assert the **MAINTENANCE ALERT: GGIO Ind XXX oscill** self-test error message on the front panel display, where **XXX** denotes the data item detected as oscillating.

The configurable GOOSE feature is recommended for applications that require GOOSE data transfer between UR-series IEDs and devices from other manufacturers. Fixed GOOSE is recommended for applications that require GOOSE data transfer between UR-series IEDs.

IEC 61850 GOOSE messaging contains a number of configurable parameters, all of which must be correct to achieve the successful transfer of data. It is critical that the configured datasets at the transmission and reception devices are an exact match in terms of data structure, and that the GOOSE addresses and name strings match exactly. Manual configuration is possible, but third-party substation configuration software may be used to automate the process. The EnerVista UR Setup software can produce IEC 61850 ICD files and import IEC 61850 SCD files produced by a substation configurator (see the IEC 61850 IED configuration information later in this appendix).

NOTICE Use independent ports for IEC 61850 communication and take care when configuring the settings, else loss of protection or misoperation of the relay can result.

The following example illustrates the configuration required to transfer IEC 61850 data items between two devices. The general steps required for transmission configuration are:

1. Configure the transmission dataset.
2. Configure the GOOSE service settings.
3. Configure the data.

The general steps required for reception configuration are:

1. Configure the reception dataset.
2. Configure the GOOSE service settings.
3. Configure the data.

This example shows how to configure the transmission and reception of three IEC 61850 data items: a single point status value, its associated quality flags, and a floating point analog value.

The following procedure illustrates the transmission configuration.

1. Configure the transmission dataset by making the following changes in the **PRODUCT SETUP** ⇨⇩ **COMMUNICATION** ⇨⇩ **IEC 61850 PROTOCOL** ⇨ **GSSE/GOOSE CONFIGURATION** ⇨ **TRANSMISSION** ⇨⇩ **CONFIGURABLE GOOSE** ⇨ **CONFIGURABLE GOOSE 1** ⇨⇩ **CONFIG GSE 1 DATASET ITEMS** settings menu:
   - Set **ITEM 1** to “GGIO1.ST.Ind1.q” to indicate quality flags for GGIO1 status indication 1.
   - Set **ITEM 2** to “GGIO1.ST.Ind1.stVal” to indicate the status value for GGIO1 status indication 1.

   The transmission dataset now contains a set of quality flags and a single point status Boolean value. The reception dataset on the receiving device must exactly match this structure.

2. Configure the GOOSE service settings by making the following changes in the **PRODUCT SETUP ⇨⇩ COMMUNICATION ⇨⇩ IEC 61850 PROTOCOL ⇨ GSSE/GOOSE CONFIGURATION ⇨ TRANSMISSION ⇨⇩ CONFIGURABLE GOOSE ⇨ CONFIGURABLE GOOSE 1** settings menu:
   – Set **CONFIG GSE 1 FUNCTION** to "Enabled".
   – Set **CONFIG GSE 1 ID** to an appropriate descriptive string (the default value is "GOOSEOut_1").
   – Set **CONFIG GSE 1 DST MAC** to a multicast address (for example, 01 00 00 12 34 56).
   – Set the **CONFIG GSE 1 VLAN PRIORITY**; the default value of "4" is OK for this example.
   – Set the **CONFIG GSE 1 VLAN ID** value; the default value is "0", but some switches may require this value to be "1".
   – Set the **CONFIG GSE 1 ETYPE APPID** value. This setting represents the Ethertype application ID and must match the configuration on the receiver (the default value is "0").
   – Set the **CONFIG GSE 1 CONFREV** value. This value changes automatically as described in IEC 61850 part 7-2. For this example it can be left at its default value.
3. Configure the data by making the following changes in the **PRODUCT SETUP ⇨⇩ COMMUNICATION ⇨⇩ IEC 61850 PROTOCOL ⇨ GGIO1 STATUS CONFIGURATION** settings menu:
   – Set **GGIO1 INDICATION 1** to a FlexLogic operand used to provide the status of GGIO1.ST.Ind1.stVal (for example, a contact input, virtual input, a protection element status, etc.).

The C70 must be rebooted (control power removed and re-applied) before these settings take effect.

The following procedure illustrates the reception configuration.

1. Configure the reception dataset by making the following changes in the **PRODUCT SETUP ⇨⇩ COMMUNICATION ⇨⇩ IEC 61850 PROTOCOL ⇨ GSSE/GOOSE CONFIGURATION ⇨⇩ RECEPTION ⇨⇩ CONFIGURABLE GOOSE ⇨ CONFIGURABLE GOOSE 1 ⇨⇩ CONFIG GSE 1 DATASET ITEMS** settings menu:
   – Set **ITEM 1** to "GGIO3.ST.Ind1.q" to indicate quality flags for GGIO3 status indication 1.
   – Set **ITEM 2** to "GGIO3.ST.Ind1.stVal" to indicate the status value for GGIO3 status indication 1.

   The reception dataset now contains a set of quality flags, a single point status Boolean value, and a floating point analog value. This matches the transmission dataset configuration above.
2. Configure the GOOSE service settings by making the following changes in the **INPUTS/OUTPUTS ⇨⇩ REMOTE DEVICES ⇨⇩ REMOTE DEVICE 1** settings menu:
   – Set **REMOTE DEVICE 1 ID** to match the GOOSE ID string for the transmitting device. Enter "GOOSEOut_1".
   – Set **REMOTE DEVICE 1 ETYPE APPID** to match the Ethertype application ID from the transmitting device. This is "0" in the example above.
   – Set the **REMOTE DEVICE 1 DATASET** value. This value represents the dataset number in use. Since we are using configurable GOOSE 1 in this example, program this value as "GOOSEIn 1".
3. Configure the data by making the following changes in the **INPUTS/OUTPUTS ⇨⇩ REMOTE INPUTS ⇨⇩ REMOTE INPUT 1** settings menu:
   – Set **REMOTE IN 1 DEVICE** to "GOOSEOut_1".
   – Set **REMOTE IN 1 ITEM** to "Dataset Item 2". This assigns the value of the GGIO3.ST.Ind1.stVal single point status item to remote input 1.

Remote input 1 can now be used in FlexLogic equations or other settings. The C70 must be rebooted (control power removed and re-applied) before these settings take effect.

The value of remote input 1 (Boolean on or off) in the receiving device will be determined by the GGIO1.ST.Ind1.stVal value in the sending device. The above settings will be automatically populated by the EnerVista UR Setup software when a complete SCD file is created by third party substation configurator software.

C.4.5 ETHERNET MAC ADDRESS FOR GSSE/GOOSE

Ethernet capable devices each contain a unique identifying address called a Media Access Control (MAC) address. This address cannot be changed and is unique for each Ethernet device produced worldwide. The address is six bytes in length and is usually represented as six hexadecimal values (for example, 00 A0 F4 01 02 03). It is used in all Ethernet frames as the 'source' address of the frame. Each Ethernet frame also contains a *destination* address. The destination address can be different for each Ethernet frame depending on the intended destination of the frame.

A special type of destination address called a *multicast* address is used when the Ethernet frame can be received by more than one device. An Ethernet MAC address is multicast when the least significant bit of the first byte is set (for example, 01 00 00 00 00 00 is a multicast address).

GSSE and GOOSE messages must have multicast destination MAC addresses.

By default, the C70 is configured to use an automated multicast MAC scheme. If the C70 destination MAC address setting is not a valid multicast address (that is, the least significant bit of the first byte is not set), the address used as the destination MAC will be the same as the local MAC address, but with the multicast bit set. Thus, if the local MAC address is 00 A0 F4 01 02 03, then the destination MAC address will be 01 A0 F4 01 02 03.

C.4.6 GSSE ID AND GOOSE ID SETTINGS

GSSE messages contain an identifier string used by receiving devices to identify the sender of the message, defined in IEC 61850 part 8-1 as GsID. This is a programmable 65-character string. This string should be chosen to provide a descriptive name of the originator of the GSSE message.

GOOSE messages contain an identifier string used by receiving devices to identify the sender of the message, defined in IEC 61850 part 8-1 as GoID. This programmable 65-character string should be a descriptive name of the originator of the GOOSE message. GOOSE messages also contain two additional character strings used for identification of the message: DatSet - the name of the associated dataset, and GoCBRef - the reference (name) of the associated GOOSE control block. These strings are automatically populated and interpreted by the C70; no settings are required.

C.5.1 OVERVIEW

The C70 can be configured for IEC 61850 via the EnerVista UR Setup software as follows.

1. An ICD file is generated for the C70 by the EnerVista UR Setup software that describe the capabilities of the IED.
2. The ICD file is then imported into a system configurator along with other ICD files for other IEDs (from GE or other vendors) for system configuration.
3. The result is saved to a SCD file, which is then imported back to EnerVista UR Setup to create one or more settings file(s). The settings file(s) can then be used to update the relay(s) with the new configuration information.

The configuration process is illustrated below.

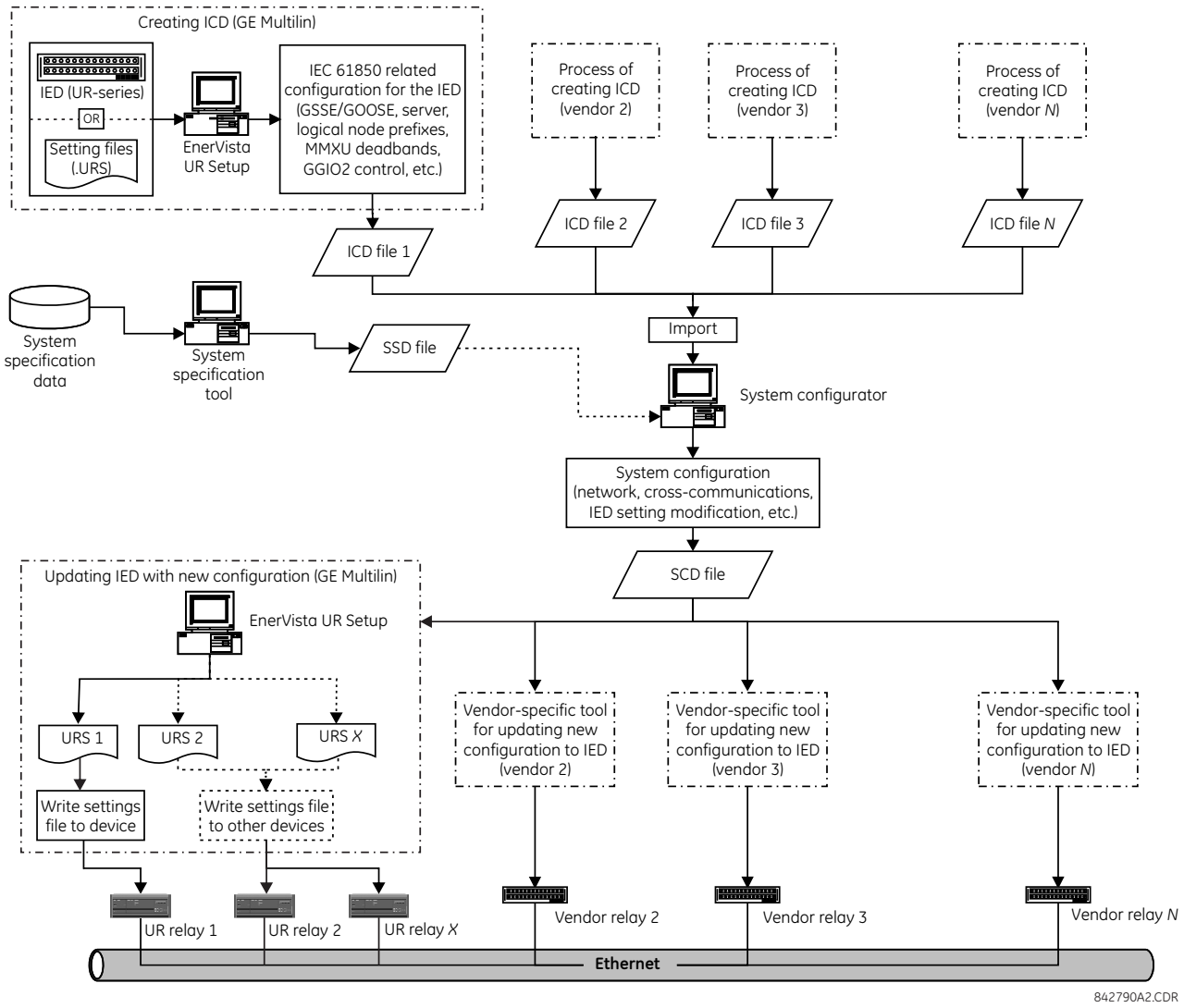

Figure C–2: IED CONFIGURATION PROCESS

The following acronyms and abbreviations are used in the procedures describing the IED configuration process for IEC 61850:

- BDA: Basic Data Attribute, that is not structured
- DAI: Instantiated Data Attribute
- DO: Data Object type or instance, depending on the context

- DOI: Instantiated Data Object
- IED: Intelligent Electronic Device
- LDInst: Instantiated Logical Device
- LNInst: Instantiated Logical Node
- SCL: Substation Configuration Description Language. The configuration language is an application of the Extensible Markup Language (XML) version 1.0.
- SDI: Instantiated Sub DATA; middle name part of a structured DATA name
- UR: GE Multilin Universal Relay series
- URI: Universal Resource Identifier
- URS: UR-series relay setting file
- XML: Extensible Markup Language

The following SCL variants are also used:

- ICD: IED Capability Description
- CID: Configured IED Description
- SSD: System Specification Description
- SCD: Substation Configuration Description

The following IEC related tools are referenced in the procedures that describe the IED configuration process for IEC 61850:

- **System configurator** or **Substation configurator**: This is an IED independent system level tool that can import or export configuration files defined by IEC 61850-6. It can import configuration files (ICD) from several IEDs for system level engineering and is used to add system information shared by different IEDs. The system configuration generates a substation related configuration file (SCD) which is fed back to the IED configurator (for example, EnerVista UR Setup) for system related IED configuration. The system configurator should also be able to read a system specification file (SSD) to use as base for starting system engineering, or to compare it with an engineered system for the same substation.
- **IED configurator**: This is a vendor specific tool that can directly or indirectly generate an ICD file from the IED (for example, from a settings file). It can also import a system SCL file (SCD) to set communication configuration parameters (that is, required addresses, reception GOOSE datasets, IDs of incoming GOOSE datasets, etc.) for the IED. The IED configurator functionality is implemented in the EnerVista UR Setup software.

C.5.2 CONFIGURING IEC 61850 SETTINGS

Before creating an ICD file, the user can customize the IEC 61850 related settings for the IED. For example, the IED name and logical device instance can be specified to uniquely identify the IED within the substation, or transmission GOOSE datasets created so that the system configurator can configure the cross-communication links to send GOOSE messages from the IED. Once the IEC 61850 settings are configured, the ICD creation process will recognize the changes and generate an ICD file that contains the updated settings.

Some of the IED settings will be modified during they system configuration process. For example, a new IP address may be assigned, line items in a Transmission GOOSE dataset may be added or deleted, or prefixes of some logical nodes may be changed. While all new configurations will be mapped to the C70 settings file when importing an SCD file, all unchanged settings will preserve the same values in the new settings file.

These settings can be configured either directly through the relay panel or through the EnerVista UR Setup software (preferred method). The full list of IEC 61850 related settings for are as follows:

- Network configuration: IP address, IP subnet mask, and default gateway IP address (access through the **Settings > Product Setup > Communications > Network** menu tree in EnerVista UR Setup).
- Server configuration: IED name and logical device instance (access through the **Settings > Product Setup > Communications > IEC 61850 > Server Configuration** menu tree in EnerVista UR Setup).
- Logical node prefixes, which includes prefixes for all logical nodes except LLN0 (access through the **Settings > Product Setup > Communications > IEC 61850 > Logical Node Prefixes** menu tree in EnerVista UR Setup).

- MMXU deadbands, which includes deadbands for all available MMXUs. The number of MMXUs is related to the number of CT/VT modules in the relay. There are two MMXUs for each CT/VT module. For example, if a relay contains two CT/VT modules, there will be four MMXUs available (access through the **Settings > Product Setup > Communications > IEC 61850 > MMXU Deadbands** menu tree in EnerVista UR Setup).
- GGIO1 status configuration, which includes the number of status points in GGIO1 as well as the potential internal mappings for each GGIO1 indication. However only the number of status points will be used in the ICD creation process (access through the **Settings > Product Setup > Communications > IEC 61850 > GGIO1 Status Configuration** menu tree in EnerVista UR Setup).
- GGIO2 control configuration, which includes ctlModels for all SPCSOs within GGIO2 (access through the **Settings > Product Setup > Communications > IEC 61850 > GGIO2 Control Configuration** menu tree in EnerVista UR Setup).
- Configurable transmission GOOSE, which includes eight configurable datasets that can be used for GOOSE transmission. The GOOSE ID can be specified for each dataset (it must be unique within the IED as well as across the whole substation), as well as the destination MAC address, VLAN priority, VLAN ID, ETYPE APPID, and the dataset items. The selection of the dataset item is restricted by firmware version; for version 7.2x, only GGIO1.ST.Indx.stVal and GGIO1.ST.Indx.q are valid selection (where *x* is between 1 to *N*, and *N* is determined by number of GGIO1 status points). Although configurable transmission GOOSE can also be created and altered by some third-party system configurators, we recommend configuring transmission GOOSE for GE Multilin IEDs before creating the ICD, and strictly within EnerVista UR Setup software or the front panel display (access through the **Settings > Product Setup > Communications > IEC 61850 > GSSE/GOOSE Configuration > Transmission > Tx Configurable GOOSE** menu tree in EnerVista UR Setup).
- Configurable reception GOOSE, which includes eight configurable datasets that can be used for GOOSE reception. However, unlike datasets for transmission, datasets for reception only contains dataset items, and they are usually created automatically by process of importing the SCD file (access through the **Settings > Product Setup > Communications > IEC 61850 > GSSE/GOOSE Configuration > Reception > Rx Configurable GOOSE** menu tree in EnerVista UR Setup).
- Remote devices configuration, which includes remote device ID (GOOSE ID or GoID of the incoming transmission GOOSE dataset), ETYPE APPID (of the GSE communication block for the incoming transmission GOOSE), and DATASET (which is the name of the associated reception GOOSE dataset). These settings are usually done automatically by process of importing SCD file (access through the **Settings > Inputs/Outputs > Remote Devices** menu tree in EnerVista UR Setup).
- Remote inputs configuration, which includes device (remote device ID) and item (which dataset item in the associated reception GOOSE dataset to map) values. Only the items with cross-communication link created in SCD file should be mapped. These configurations are usually done automatically by process of importing SCD file (access through the **Settings > Inputs/Outputs > Remote Inputs** menu tree in EnerVista UR Setup).

C.5.3 ABOUT ICD FILES

The SCL language is based on XML, and its syntax definition is described as a W3C XML Schema. ICD is one type of SCL file (which also includes SSD, CID and SCD files). The ICD file describes the capabilities of an IED and consists of four major sections:

- Header
- Communication
- IEDs
- DataTypeTemplates

The root file structure of an ICD file is illustrated below.

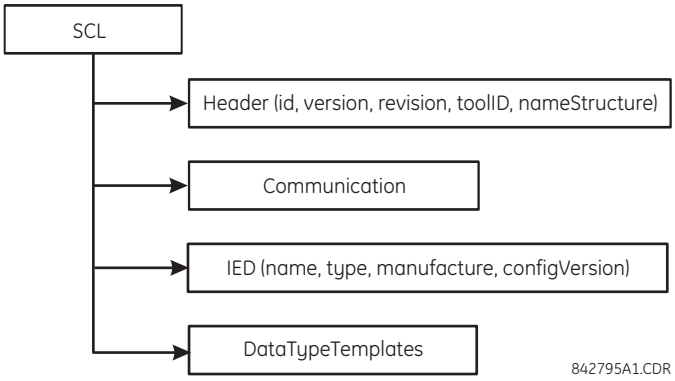

Figure C–3: ICD FILE STRUCTURE, SCL (ROOT) NODE

The **Header** node identifies the ICD file and its version, and specifies options for the mapping of names to signals

The **Communication** node describes the direct communication connection possibilities between logical nodes by means of logical buses (sub-networks) and IED access ports. The communication section is structured as follows.

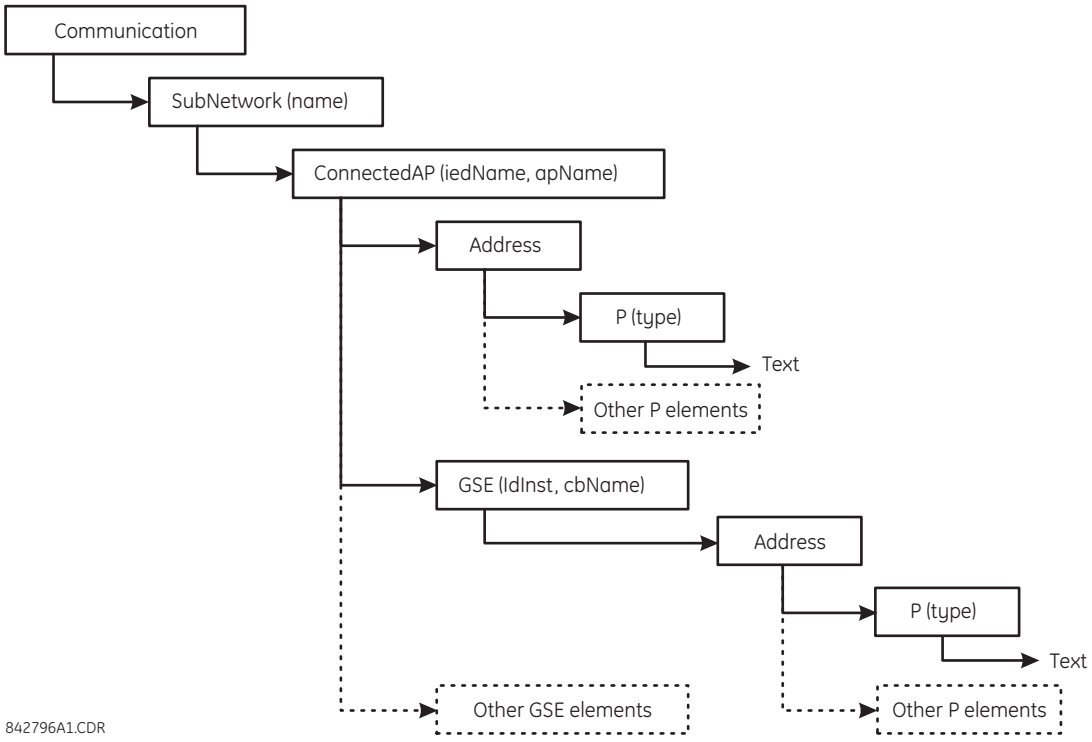

Figure C–4: ICD FILE STRUCTURE, COMMUNICATIONS NODE

The **SubNetwork** node contains all access points which can (logically) communicate with the sub-network protocol and without the intervening router. The **ConnectedAP** node describes the IED access point connected to this sub-network. The **Address** node contains the address parameters of the access point. The **GSE** node provides the address element for stating the control block related address parameters, where **IdInst** is the instance identification of the logical device within the IED on which the control block is located, and **cbName** is the name of the control block.

The **IED** node describes the (pre-)configuration of an IED: its access points, the logical devices, and logical nodes instantiated on it. Furthermore, it defines the capabilities of an IED in terms of communication services offered and, together with its **LNType**, instantiated data (DO) and its default or configuration values. There should be only one IED section in an ICD since it only describes one IED.

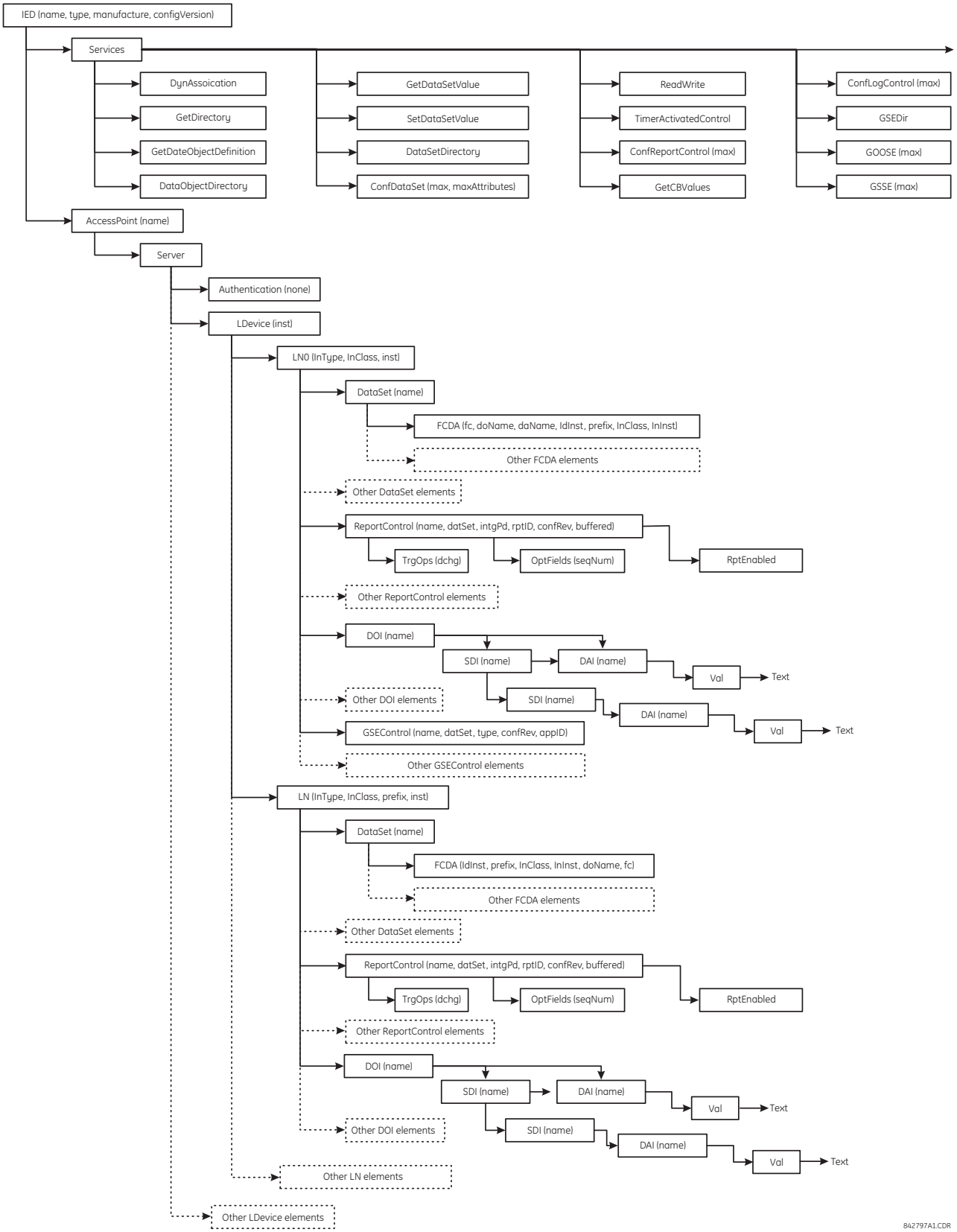

Figure C–5: ICD FILE STRUCTURE, IED NODE

The **DataTypeTemplates** node defines instantiable logical node types. A logical node type is an instantiable template of the data of a logical node. A **LnodeType** is referenced each time that this instantiable type is needed with an IED. A logical node type template is built from DATA (DO) elements, which again have a DO type, which is derived from the DATA classes (CDC). DOs consist of attributes (DA) or of elements of already defined DO types (SDO). The attribute (DA) has a functional constraint, and can either have a basic type, be an enumeration, or a structure of a **DAType**. The DAType is built from BDA elements, defining the structure elements, which again can be **BDA** elements of have a base type such as DA.

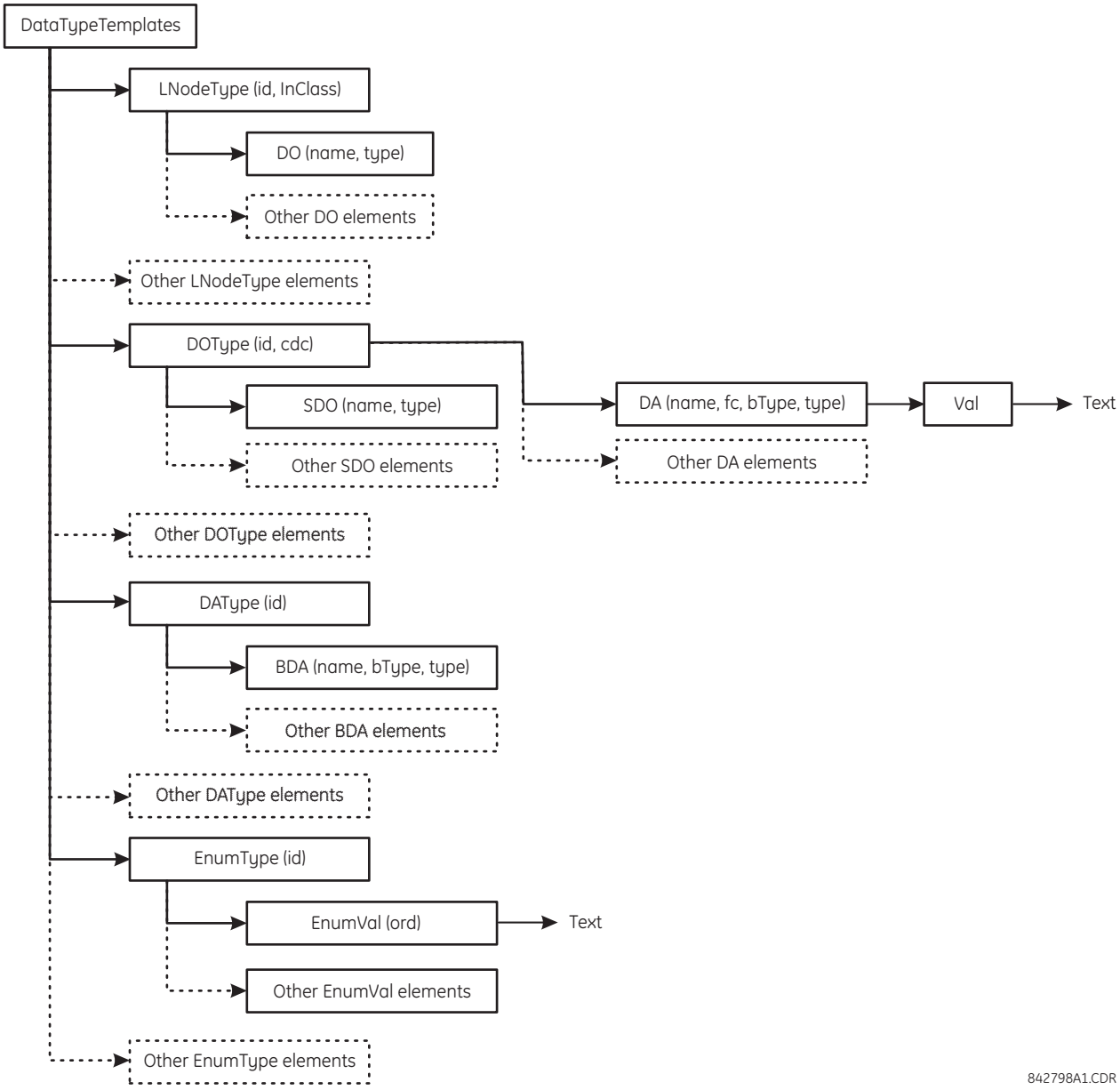

Figure C–6: ICD FILE STRUCTURE, DATATYPETEMPLATES NODE

C.5.4 CREATING AN ICD FILE WITH ENERVISTA UR SETUP

An ICD file can be created directly from a connected C70 IED or from an offline C70 settings file with the EnerVista UR Setup software using the following procedure:

1. Right-click the connected UR-series relay or settings file and select **Create ICD File**.

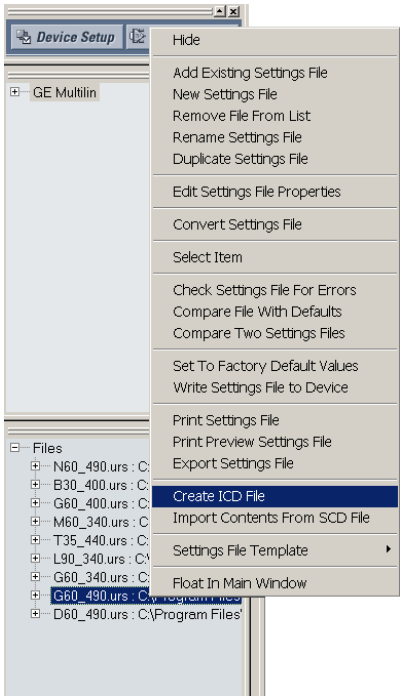

2. The EnerVista UR Setup will prompt to save the file. Select the file path and enter the name for the ICD file, then click **OK** to generate the file.

The time to create an ICD file from the offline C70 settings file is typically much quicker than create an ICD file directly from the relay.

C.5.5 ABOUT SCD FILES

System configuration is performed in the system configurator. While many vendors (including GE Multilin) are working their own system configuration tools, there are some system configurators available in the market (for example, Siemens DIGSI version 4.6 or above and ASE Visual SCL Beta 0.12).

Although the configuration tools vary from one vendor to another, the procedure is pretty much the same. First, a substation project must be created, either as an empty template or with some system information by importing a system specification file (SSD). Then, IEDs are added to the substation. Since each IED is represented by its associated ICD, the ICD files are imported into the substation project, and the system configurator validates the ICD files during the importing process. If the ICD files are successfully imported into the substation project, it may be necessary to perform some additional minor steps to attach the IEDs to the substation (see the system configurator manual for details).

Once all IEDs are inserted into the substation, further configuration is possible, such as:

- Assigning network addresses to individual IEDs.
- Customizing the prefixes of logical nodes.
- Creating cross-communication links (configuring GOOSE messages to send from one IED to others).

When system configurations are complete, the results are saved to an SCD file, which contains not only the configuration for each IED in the substation, but also the system configuration for the entire substation. Finally, the SCD file is passed back to the IED configurator (vendor specific tool) to update the new configuration into the IED.

The SCD file consists of at least five major sections:

- Header.
- Substation.
- Communication.
- IED section (one or more).
- DataTypeTemplates.

The root file structure of an SCD file is illustrated below.

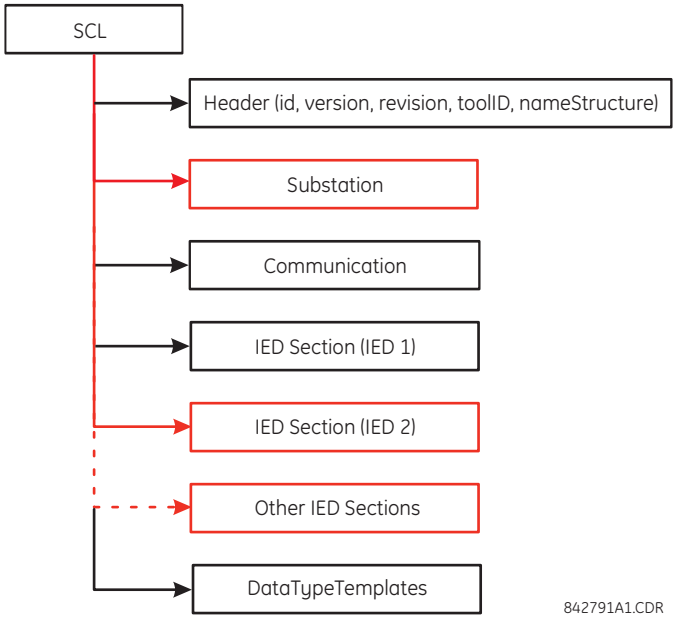

Figure C–7: SCD FILE STRUCTURE, SCL (ROOT) NODE

Like ICD files, the **Header** node identifies the SCD file and its version, and specifies options for the mapping of names to signals.

The **Substation** node describes the substation parameters:

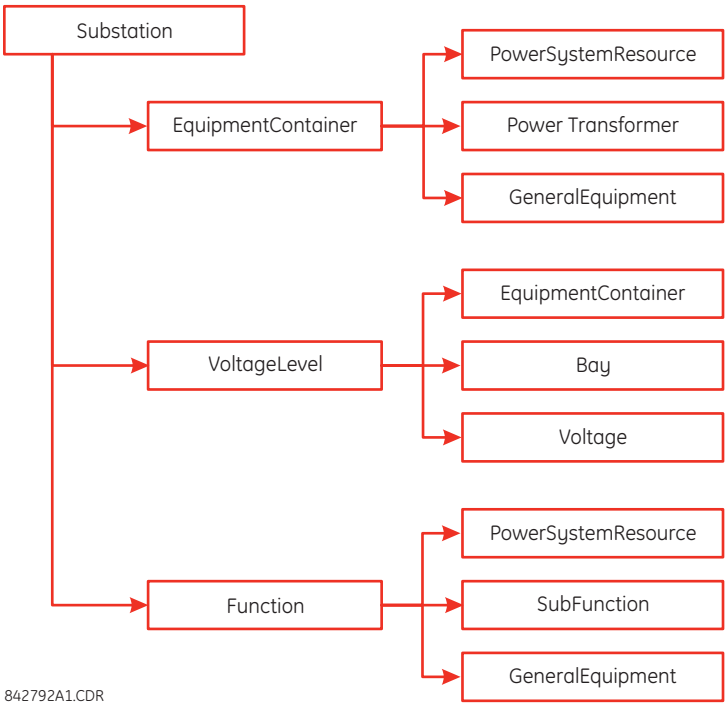

Figure C–8: SCD FILE STRUCTURE, SUBSTATION NODE

The **Communication** node describes the direct communication connection possibilities between logical nodes by means of logical buses (sub-networks) and IED access ports. The communication section is structured as follows.

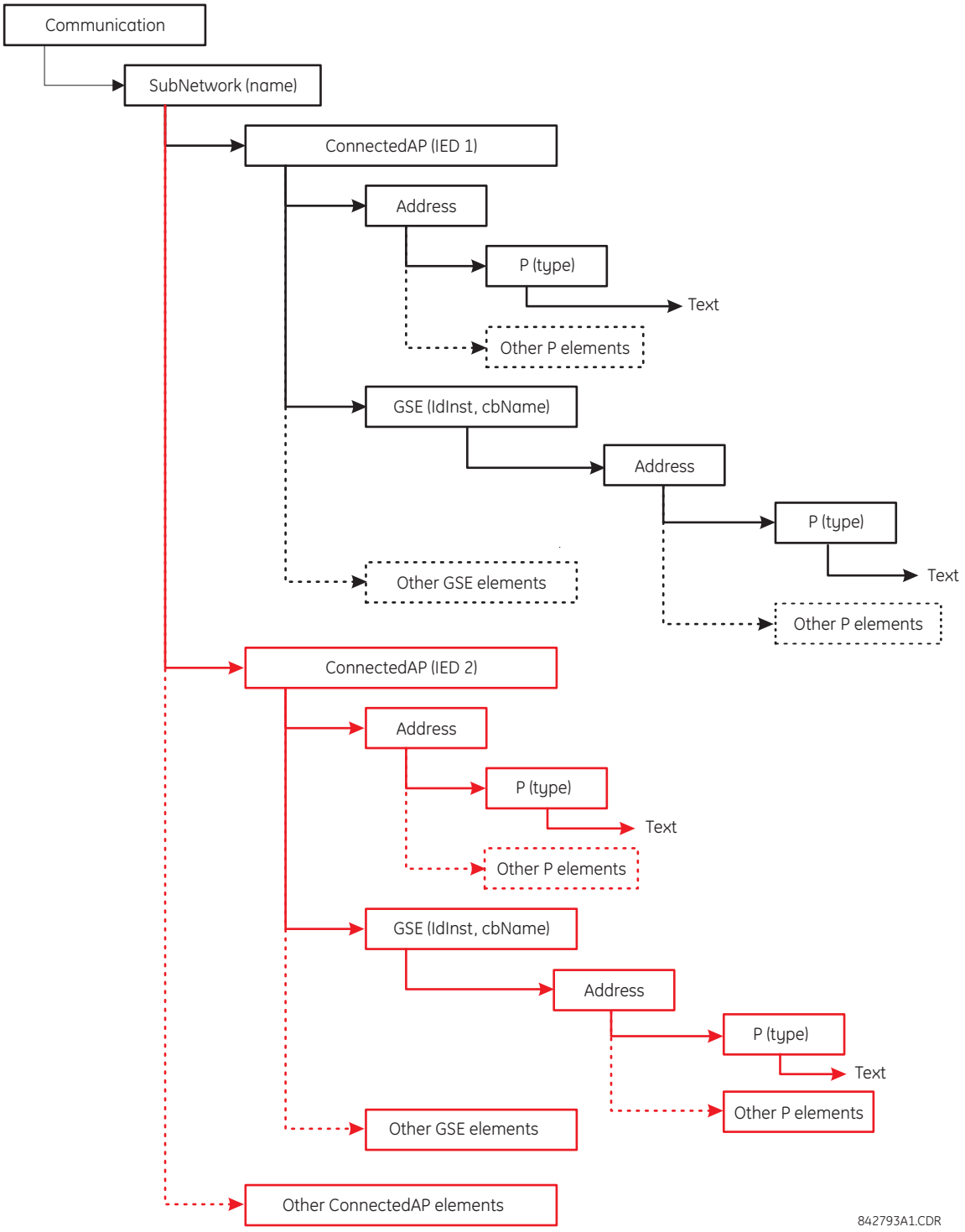

Figure C–9: SCD FILE STRUCTURE, COMMUNICATIONS NODE

The **SubNetwork** node contains all access points which can (logically) communicate with the sub-network protocol and without the intervening router. The **ConnectedAP** node describes the IED access point connected to this sub-network. The **Address** node contains the address parameters of the access point. The **GSE** node provides the address element for stating the control block related address parameters, where **ldInst** is the instance identification of the logical device within the IED on which the control block is located, and **cbName** is the name of the control block.

The **IED Section** node describes the configuration of an IED.

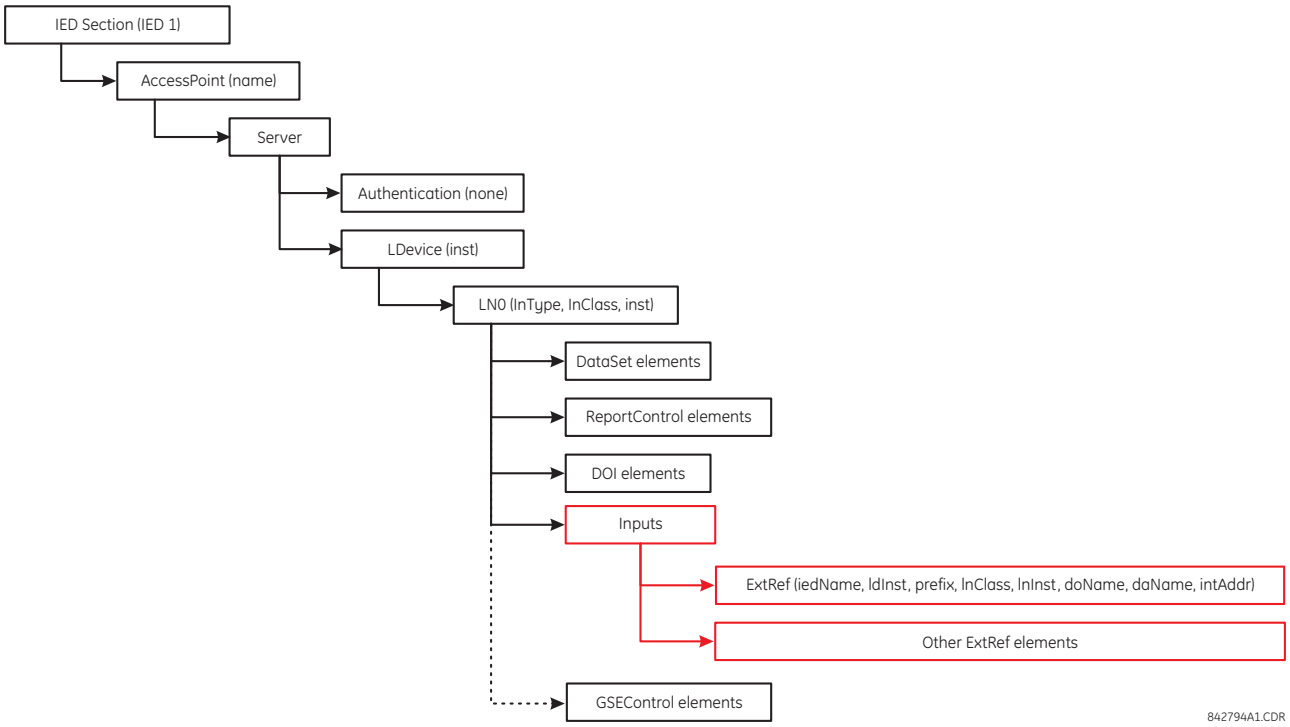

Figure C–10: SCD FILE STRUCTURE, IED NODE

C.5.6 IMPORTING AN SCD FILE WITH ENERVISTA UR SETUP

The following procedure describes how to update the C70 with the new configuration from an SCD file with the EnerVista UR Setup software.

1. Right-click anywhere in the files panel and select the **Import Contents From SCD File** item.

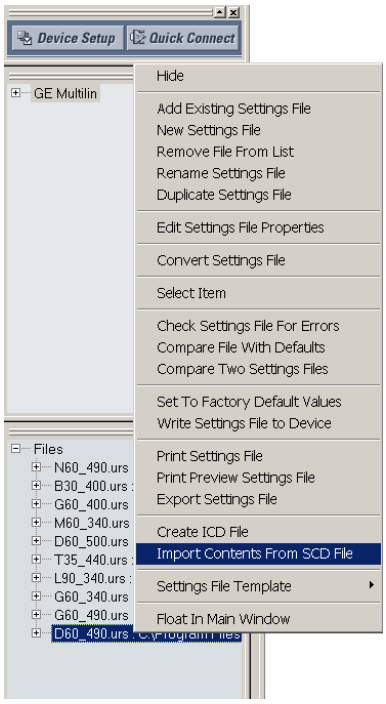

2. Select the saved SCD file and click **Open**.
3. The software will open the SCD file and then prompt the user to save a UR-series settings file. Select a location and name for the URS (UR-series relay settings) file.

   If there is more than one GE Multilin IED defined in the SCD file, the software prompt the user to save a UR-series settings file for each IED.
4. After the URS file is created, modify any settings (if required).
5. To update the relay with the new settings, right-click on the settings file in the settings tree and select the **Write Settings File to Device** item.
6. The software will prompt for the target device. Select the target device from the list provided and click **Send**. The new settings will be updated to the selected device.

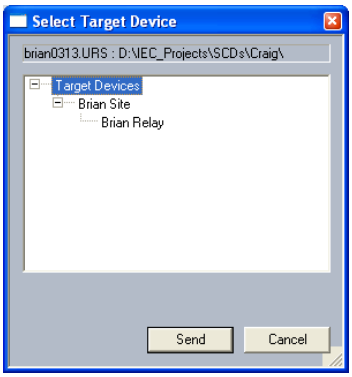

C.6.1 ACSI BASIC CONFORMANCE STATEMENT

SERVICES		SERVER/ PUBLISHER	UR-FAMILY
CLIENT-SERVER ROLES			
B11	**Server** side (of Two-party Application-Association)	**c1**	**Yes**
B12	**Client** side (of Two-party Application-Association)	**---**	
SCSMS SUPPORTED			
B21	**SCSM**: IEC 61850-8-1 used		**Yes**
B22	**SCSM**: IEC 61850-9-1 used		
B23	**SCSM**: IEC 61850-9-2 used		
B24	**SCSM**: other		
GENERIC SUBSTATION EVENT MODEL (GSE)			
B31	**Publisher** side	**O**	**Yes**
B32	**Subscriber** side	**---**	**Yes**
TRANSMISSION OF SAMPLED VALUE MODEL (SVC)			
B41	**Publisher** side	**O**	
B42	**Subscriber** side	**---**	

NOTE

c1: shall be "M" if support for LOGICAL-DEVICE model has been declared
O: Optional
M: Mandatory

C.6.2 ACSI MODELS CONFORMANCE STATEMENT

SERVICES		SERVER/ PUBLISHER	UR-FAMILY
IF SERVER SIDE (B11) SUPPORTED			
M1	**Logical device**	**c2**	**Yes**
M2	**Logical node**	**c3**	**Yes**
M3	**Data**	**c4**	**Yes**
M4	**Data set**	**c5**	**Yes**
M5	**Substitution**	**O**	
M6	**Setting group control**	**O**	
	REPORTING		
M7	**Buffered report control**	**O**	**Yes**
M7-1	sequence-number		
M7-2	report-time-stamp		
M7-3	reason-for-inclusion		
M7-4	data-set-name		
M7-5	data-reference		
M7-6	buffer-overflow		
M7-7	entryID		
M7-8	BufTm		
M7-9	IntgPd		
M7-10	GI		
M8	**Unbuffered report control**	**O**	**Yes**
M8-1	sequence-number		
M8-2	report-time-stamp		
M8-3	reason-for-inclusion		

SERVICES		SERVER/ PUBLISHER	UR-FAMILY
M8-4	data-set-name		
M8-5	data-reference		
M8-6	BufTm		
M8-7	IntgPd		
M8-8	GI		
	Logging	**O**	
M9	**Log control**	**O**	
M9-1	IntgPd		
M10	**Log**	**O**	
M11	**Control**	**M**	**Yes**
IF GSE (B31/32) IS SUPPORTED			
	GOOSE	**O**	**Yes**
M12-1	entryID		
M12-2	DataRefInc		
M13	**GSSE**	**O**	**Yes**
IF SVC (B41/B42) IS SUPPORTED			
M14	Multicast SVC	**O**	
M15	Unicast SVC	**O**	
M16	**Time**	**M**	**Yes**
M17	**File transfer**	**O**	**Yes**

NOTE

c2: shall be "M" if support for LOGICAL-NODE model has been declared
c3: shall be "M" if support for DATA model has been declared
c4: shall be "M" if support for DATA-SET, Substitution, Report, Log Control, or Time models has been declared
c5: shall be "M" if support for Report, GSE, or SMV models has been declared
M: Mandatory

C.6.3 ACSI SERVICES CONFORMANCE STATEMENT

In the table below, the acronym AA refers to Application Associations (TP: Two Party / MC: Multicast). The c6 to c10 entries are defined in the notes following the table.

SERVICES		AA: TP/MC	SERVER/ PUBLISHER	UR FAMILY
SERVER (CLAUSE 7)				
S1	ServerDirectory	TP	M	Yes
APPLICATION ASSOCIATION (CLAUSE 8)				
S2	Associate	TP	M	Yes
S3	Abort	TP	M	Yes
S4	Release	TP	M	Yes
LOGICAL DEVICE (CLAUSE 9)				
S5	LogicalDeviceDirectory	TP	M	Yes
LOGICAL NODE (CLAUSE 10)				
S6	LogicalNodeDirectory	TP	M	Yes
S7	GetAllDataValues	TP	M	Yes
DATA (CLAUSE 11)				
S8	GetDataValues	TP	M	Yes
S9	SetDataValues	TP	O	Yes
S10	GetDataDirectory	TP	M	Yes
S11	GetDataDefinition	TP	M	Yes

SERVICES		AA: TP/MC	SERVER/ PUBLISHER	UR FAMILY
DATA SET (CLAUSE 12)				
S12	GetDataSetValues	TP	M	Yes
S13	SetDataSetValues	TP	O	
S14	CreateDataSet	TP	O	
S15	DeleteDataSet	TP	O	
S16	GetDataSetDirectory	TP	O	Yes
SETTING GROUP CONTROL (CLAUSE 16)				
S18	SelectActiveSG	TP	O	
S19	SelectEditSG	TP	O	
S20	SetSGValues	TP	O	
S21	ConfirmEditSGValues	TP	O	
S22	GetSGValues	TP	O	
S23	GetSGCBValues	TP	O	
REPORTING (CLAUSE 17)				
	BUFFERED REPORT CONTROL BLOCK (BRCB)			
S24	Report	TP	c6	Yes
S24-1	data-change (dchg)			Yes
S24-2	qchg-change (qchg)			
S24-3	data-update (dupd)			
S25	GetBRCBValues	TP	c6	Yes
S26	SetBRCBValues	TP	c6	Yes
	UNBUFFERED REPORT CONTROL BLOCK (URCB)			
S27	Report	TP	c6	Yes
S27-1	data-change (dchg)			Yes
S27-2	qchg-change (qchg)			
S27-3	data-update (dupd)			
S28	GetURCBValues	TP	c6	Yes
S29	SetURCBValues	TP	c6	Yes
LOGGING (CLAUSE 17)				
	LOG CONTROL BLOCK			
S30	GetLCBValues	TP	M	
S31	SetLCBValues	TP	M	
	LOG			
S32	QueryLogByTime	TP	M	
S33	QueryLogByEntry	TP	M	
S34	GetLogStatusValues	TP	M	
GENERIC SUBSTATION EVENT MODEL (GSE) (CLAUSE 18, ANNEX C)				
	GOOSE-CONTROL-BLOCK (CLAUSE 18)			
S35	SendGOOSEMessage	MC	c8	Yes
S36	GetReference	TP	c9	
S37	GetGOOSEElementNumber	TP	c9	
S38	GetGoCBValues	TP	O	Yes
S39	SetGoCBValues	TP	O	Yes
	GSSE-CONTROL-BLOCK (ANNEX C)			
S40	SendGSSEMessage	MC	c8	Yes
S41	GetReference	TP	c9	
S42	GetGSSEElementNumber	TP	c9	
S43	GetGsCBValues	TP	O	Yes

SERVICES		AA: TP/MC	SERVER/ PUBLISHER	UR FAMILY
S44	SetGsCBValues	TP	O	Yes
TRANSMISSION OF SAMPLED VALUE MODEL (SVC) (CLAUSE 19)				
	MULTICAST SVC			
S45	SendMSVMessage	MC	c10	
S46	GetMSVCBValues	TP	O	
S47	SetMSVCBValues	TP	O	
	UNICAST SVC			
S48	SendUSVMessage	MC	c10	
S49	GetUSVCBValues	TP	O	
S50	SetUSVCBValues	TP	O	
CONTROL (CLAUSE 20)				
S51	Select		O	Yes
S52	SelectWithValue	TP	O	
S53	Cancel	TP	O	Yes
S54	Operate	TP	M	Yes
S55	Command-Termination	TP	O	
S56	TimeActivated-Operate	TP	O	
FILE TRANSFER (CLAUSE 23)				
S57	GetFile	TP	M	Yes
S58	SetFile	TP	O	
S59	DeleteFile	TP	O	
S60	GetFileAttributeValues	TP	M	Yes
TIME (CLAUSE 5.5)				
T1	Time resolution of internal clock (nearest negative power of 2 in seconds)			20
T2	Time accuracy of internal clock			SNTP, IRIG-B
T3	Supported TimeStamp resolution (nearest value of 2^{-n} in seconds, according to 6.1.2.9.3.2)			20

NOTE

c6: shall declare support for at least one (BRCB or URCB)
c7: shall declare support for at least one (QueryLogByTime or QueryLogAfter)
c8: shall declare support for at least one (SendGOOSEMessage or SendGSSEMessage)
c9: shall declare support if TP association is available
c10: shall declare support for at least one (SendMSVMessage or SendUSVMessage)

C.7.1 LOGICAL NODES TABLE

The UR-series of relays supports IEC 61850 logical nodes as indicated in the following table. Note that the actual instantiation of each logical node is determined by the product order code. For example. the logical node “PDIS” (distance protection) is available only in the D60 Line Distance Relay.

Table C–1: IEC 61850 LOGICAL NODES (Sheet 1 of 4)

NODES	UR-FAMILY
L: SYSTEM LOGICAL NODES	
LPHD: Physical device information	Yes
LLN0: Logical node zero	Yes
LCCH: Physical communication channel supervision	---
LGOS: GOOSE subscription	---
LSVS: Sampled value subscription	---
LTIM: Time management	---
LTMS: Time master supervision	---
LTRK: Service tracking	---
A: LOGICAL NODES FOR AUTOMATIC CONTROL	
ANCR: Neutral current regulator	---
ARCO: Reactive power control	---
ATCC: Automatic tap changer controller	---
AVCO: Voltage control	---
C: LOGICAL NODES FOR CONTROL	
CALH: Alarm handling	---
CCGR: Cooling group control	---
CILO: Interlocking	---
CPOW: Point-on-wave switching	---
CSWI: Switch controller	Yes
CSYN: Synchronizer controller	---
F: LOGICAL NODES FOR FUNCTIONAL BLOCKS	
FCNT: Counter	---
FCSD: Curve shape description	---
FFIL: Generic filler	---
FLIM: Control function output limitation	---
FPID: PID regulator	---
FRMP: Ramp function	---
FSPT: Set-point control function	---
FXOT: Action at over threshold	---
FXUT: Action at under threshold	---
G: LOGICAL NODES FOR GENERIC REFERENCES	
GAPC: Generic automatic process control	---
GGIO: Generic process I/O	Yes
GLOG: Generic log	---
GSAL: Generic security application	---
I: LOGICAL NODES FOR INTERFACING AND ARCHIVING	
IARC: Archiving	---
IHMI: Human machine interface	---
ISAF: Safety alarm function	---
ITCI: Telecontrol interface	---
ITMI: Telemonitoring interface	---

Table C–1: IEC 61850 LOGICAL NODES (Sheet 2 of 4)

NODES	UR-FAMILY
ITPC: Teleprotection communication interfaces	---
K: LOGICAL NODES FOR MECHANICAL AND NON-ELECTRIC PRIMARY EQUIPMENT	
KFAN: Fan	---
KFIL: Filter	---
KPMP: Pump	---
KTNK: Tank	---
KVLV: Valve control	---
M: LOGICAL NODES FOR METERING AND MEASUREMENT	
MENV: Environmental information	---
MFLK: Flicker measurement name	---
MHAI: Harmonics or interharmonics	---
MHAN: Non phase related harmonics or interharmonics	---
MHYD: Hydrological information	---
MMDC: DC measurement	---
MMET: Meteorological information	---
MMTN: Metering	---
MMTR: Metering	---
MMXN: Non-phase-related measurement	Yes
MMXU: Measurement	Yes
MSQI: Sequence and imbalance	Yes
MSTA: Metering statistics	---
P: LOGICAL NODES FOR PROTECTION FUNCTIONS	
PDIF: Differential	Yes
PDIR: Direction comparison	---
PDIS: Distance	Yes
PDOP: Directional overpower	---
PDUP: Directional underpower	---
PFRC: Rate of change of frequency	---
PHAR: Harmonic restraint	---
PHIZ: Ground detector	---
PIOC: Instantaneous overcurrent	Yes
PMRI Motor restart inhibition	---
PMSS: Motor starting time supervision	---
POPF: Over power factor	---
PPAM: Phase angle measuring	---
PRTR: Rotor protection	---
PSCH: Protection scheme	---
PSDE: Sensitive directional earth fault	---
PTEF: Transient earth fault	---
PTOC: Time overcurrent	Yes
PTOF: Overfrequency	---
PTOV: Overvoltage	Yes
PTRC: Protection trip conditioning	Yes
PTTR: Thermal overload	---
PTUC: Undercurrent	---
PTUF: Underfrequency	---
PTUV: Undervoltage	Yes

Table C–1: IEC 61850 LOGICAL NODES (Sheet 3 of 4)

NODES	UR-FAMILY
PUPF: Underpower factor	---
PVOC: Voltage controlled time overcurrent	---
PVPH: Volts per Hz	---
PZSU: Zero speed or underspeed	---
Q: LOGICAL NODES FOR POWER QUALITY EVENTS	
QFVR: Frequency variation	---
QITR: Current transient	---
QIUB: Current unbalance variation	---
QVTR: Voltage transient	---
QVUB: Voltage unbalance variation	---
QVVR: Voltage variation	---
R: LOGICAL NODES FOR PROTECTION-RELATED FUNCTIONS	
RADR: Disturbance recorder channel analogue	---
RBDR: Disturbance recorder channel binary	---
RBRF: Breaker failure	---
RDIR: Directional element	---
RDRE: Disturbance recorder function	---
RDRS: Disturbance record handling	---
RFLO: Fault locator	Yes
RMXU: Differential measurements	---
RPSB: Power swing detection/blocking	Yes
RREC: Autoreclosing	Yes
RSYN: Synchronism-check or synchronizing	---
S: LOGICAL NODES FOR SENSORS AND MONITORING	
SARC: Monitoring and diagnostics for arcs	---
SCBR: Circuit breaker supervision	---
SIMG: Insulation medium supervision (gas)	---
SIML: Insulation medium supervision (liquid)	---
SLTC: Tap changer supervision	---
SOPM: Supervision of operating mechanism	---
SPDC: Monitoring and diagnostics for partial discharges	---
SPTR: Power transformer supervision	---
SSWI: Circuit switch supervision	---
STMP: Temperature supervision	---
SVBR: Vibration supervision	---
T: LOGICAL NODES FOR INSTRUMENT TRANSFORMERS	
TANG: Angle	---
TAXD: Axial displacement	---
TCTR: Current transformer	---
TDST: Distance	---
TFLW: Liquid flow	---
TFRQ: Frequency	---
TGSN: Generic sensor	---
THUM: Humidity	---
TLVL: Media level	---
TMGF: Magnetic field	---
TMVM: Movement sensor	---

Table C–1: IEC 61850 LOGICAL NODES (Sheet 4 of 4)

NODES	UR-FAMILY
TPOS: Position indicator	---
TPRS: Pressure sensor	---
TRTN: Rotation transmitter	---
TSND: Sound pressure sensor	---
TTMP: Temperature sensor	---
TTNS: Mechanical tension	---
TVBR: Vibration sensor	---
TVTR: Voltage transformer	---
TWPH: Water acidity	---
X: LOGICAL NODES FOR SWITCHGEAR	
XCBR: Circuit breaker	Yes
XSWI: Circuit switch	Yes
Y: LOGICAL NODES FOR POWER TRANSFORMERS	
YEFN: Earth fault neutralizer (Petersen coil)	---
YLTC: Tap changer	---
YPSH: Power shunt	---
YPTR: Power transformer	---
Z: LOGICAL NODES FOR FURTHER POWER SYSTEM EQUIPMENT	
ZAXN: Auxiliary network	---
ZBAT: Battery	---
ZBSH: Bushing	---
ZCAB: Power cable	---
ZCAP: Capacitor bank	---
ZCON: Converter	---
ZGEN: Generator	---
ZGIL: Gas insulated line	---
ZLIN: Power overhead line	---
ZMOT: Motor	---
ZREA: Reactor	---
ZRES: Resistor	---
ZRRC: Rotating reactive component	---
ZSAR: Surge arrestor	---
ZSCR: Semi-conductor controlled rectifier	---
ZSMC: Synchronous machine	---
ZTCF: Thyristor controlled frequency converter	---
ZTRC: Thyristor controlled reactive component	---

C

D.1.1 OVERVIEW

IEC 60870-5-103 is defined as a companion standard for the informative element of the protection equipment. IEC 60870-5-103 defines communication for a serial, unbalanced link only. Communication speeds are defined as either 9600 or 19200 baud.

This manual assumes basic knowledge of the IEC 60870-5-103 protocol and the standard IEC 60870 documents relating to the protocol.

Standard IEC 60870 documents relating to IEC 60870-5-103:

- IEC 60870-5-1 Transmission frame formats
- IEC 60870-5-2 Link transmission procedures
- IEC 60870-5-3 General structure of application data
- IEC 60870-5-4 Definition and coding of application information elements
- IEC 60870-5-5 Basic application functions
- IEC 60870-5-6 Conformance testing guidelines

An IEC 60870-5-103 device is required to provide an interoperability table. Interoperability means that any required application data in the device, which can be coded into an IEC 60870-5-103 data type, can be mapped into the IEC 60870-5-103 address space. This data is recognized by any IEC 60870-5-103 master.

D.1.2 FACTOR AND OFFSET CALCULATION TO TRANSMIT MEASURAND

The general formula for the transmitted value is Xt = a * X + b

where X is the measurand, a is the multiplication factor, b is the offset and Xt is the value transmitted.

The conditions for determining a and b, when the values exceed the range are:

4096 = a*Xmax + b (Xmax is the maximum value for the measurand)

-4095 =a*Xmin + b (Xmin is the minimum value for the measurand)

By solving the above system of equations for a and b, we find that:

a = 8191 / (Xmax - Xmin)

b = -4096 * (Xmax + Xmin) / (Xmax - Xmin)

So

Xt = 8191/(Xmax - Xmin)) * X - 4096 * (Xmax + Xmin) / (Xmax - Xmin)

We may further simplify the above formula for situations where:

1)

Xmin = -Xmax (positive and negative values) :

Xt = (8191/2*Xmax) * X

a = 4096/Xmax

b = 0

2)

If Xmin = 0 (only positive values)

Xt = (8191/Xmax) * X - 4096

a = 2 * 4096/Xmax

b = -4096

To calculate Xmax, one needs to know the rated value for the specific type of measurand.

Xmax = 2.4 * Xrated

The boxes indicate the following: ☒ – used in standard direction; ☐ – not used.

1. PHYSICAL LAYER

Electrical interface

☒ EIA RS-485

32 Number of loads for one protection equipment

Optical interface

☐ Glass fibre

☐ Plastic fibre

☐ F-SMA type connector

☐ BFOC/2.5 type connector

Transmission speed

☒ 9600 bits/s

☒ 19200 bits/s

2. LINK LAYER

There are no choices for the link layer.

3. APPLICATION LAYER

Transmission mode for application data

Mode 1 (least significant octet first), as defined in 4.10 of IEC 60870-5-4, is used exclusively in this companion standard.

Common address of ASDU

☒ One COMMON ADDRESS OF ASDU (identical with station address)

☐ More than one COMMON ADDRESS OF ASDU

Selection of standard information numbers in monitor direction

System functions in monitor direction

	INF	Semantics
☒	<0>	End of general interrogation
☒	<0>	Time synchronization
☒	<2>	Reset FCB
☒	<3>	Reset CU
☒	<4>	Start/restart
☒	<5>	Power on

Status indications in monitor direction

	INF	Semantics
☐	<16>	Auto-recloser active
☐	<17>	Teleprotection active
☐	<18>	Protection active
☐	<19>	LED reset
☐	<20>	Monitor direction blocked
☐	<21>	Test mode

- ☐ <22> Local parameter setting
- ☐ <23> Characteristic 1
- ☐ <24> Characteristic 2
- ☐ <25> Characteristic 3
- ☐ <26> Characteristic 4
- ☐ <27> Auxiliary input 1
- ☐ <28> Auxiliary input 2
- ☐ <29> Auxiliary input 3
- ☐ <30> Auxiliary input 4

Supervision indications in monitor direction

INF Semantics

- ☐ <32> Measurand supervision I
- ☐ <33> Measurand supervision V
- ☐ <35> Phase sequence supervision
- ☐ <36> Trip circuit supervision
- ☐ <37> I>> back-up operation
- ☐ <38> VT fuse failure
- ☐ <39> Teleprotection disturbed
- ☐ <46> Group warning
- ☐ <47> Group alarm

Earth fault indications in monitor direction

INF Semantics

- ☐ <48> Earth fault L_1
- ☐ <49> Earth fault L_2
- ☐ <50> Earth fault L_3
- ☐ <51> Earth fault forward, meaning line
- ☐ <52> Earth fault reverse, meaning busbar

Fault indications in monitor direction

INF Semantics

- ☐ <64> Start/pick-up L_1
- ☐ <65> Start/pick-up L_2
- ☐ <66> Start/pick-up L_3
- ☐ <67> Start/pick-up N
- ☐ <68> General trip
- ☐ <69> Trip L_1
- ☐ <70> Trip L_2
- ☐ <71> Trip L_3
- ☐ <72> Trip I>> (back-up operation)
- ☐ <73> Fault location X in ohms
- ☐ <74> Fault forward/line

- ☐ <75> Fault reverse/busbar
- ☐ <76> Teleprotection signal transmitted
- ☐ <77> Teleprotection signal received
- ☐ <78> Zone 1
- ☐ <79> Zone 2
- ☐ <80> Zone 3
- ☐ <81> Zone 4
- ☐ <82> Zone 5
- ☐ <83> Zone 6
- ☐ <84> General start / pick-up
- ☐ <85> Breaker failure
- ☐ <86> Trip measuring system L_1
- ☐ <87> Trip measuring system L_2
- ☐ <88> Trip measuring system L_3
- ☐ <89> Trip measuring system E
- ☐ <90> Trip I>
- ☐ <91> Trip I>>
- ☐ <92> Trip IN>
- ☐ <93> Trip IN>>

Auto-reclosure indications in monitor direction

INF Semantics

- ☐ <128> CB 'on' by AR
- ☐ <129> CB 'on' by long-time AR
- ☐ <130> AR blocked

Measurands in monitor direction

INF Semantics

- ☐ <144> Measurand I
- ☐ <145> Measurands I, V
- ☐ <146> Measurands I, V, P, Q
- ☐ <147> Measurands I_N, V_{EN}
- ☐ <148> Measurands I_{L123}, V_{L123}, P, Q, f

Generic functions in monitor direction

INF Semantics

- ☐ <240> Read headings of all defined groups
- ☐ <241> Read values or attributes of all entries of one group
- ☐ <243> Read directory of a single entry
- ☐ <244> Read value or attribute of a single entry
- ☐ <245> End of general interrogation of generic data
- ☐ <249> Write entry with confirmation
- ☐ <250> Write entry with execution

☐ <251> Write entry aborted

Selection of standard information numbers in control direction

System functions in control direction

	INF	Semantics
☒	<0>	Initiation of general interrogation
☒	<0>	Time synchronization

General commands in control direction

	INF	Semantics
☐	<16>	Auto-recloser on/off
☐	<17>	Teleprotection on/off
☐	<18>	Protection on/off
☐	<19>	LED reset
☐	<23>	Activate characteristic 1
☐	<24>	Activate characteristic 2
☐	<25>	Activate characteristic 3
☐	<26>	Activate characteristic 4

Generic functions in control direction

	INF	Semantics
☐	<240>	Read headings of all defined groups
☐	<241>	Read values or attributes of all entries of one group
☐	<243>	Read directory of a single entry
☐	<244>	Read value or attribute of a single entry
☐	<245>	General interrogation of generic data
☐	<248>	Write entry
☐	<249>	Write entry with confirmation
☐	<250>	Write entry with execution
☐	<251>	Write entry abort

Basic application functions

- ☐ Test mode
- ☐ Blocking of monitor direction
- ☐ Disturbance data
- ☐ Generic services
- ☐ Private data

Miscellaneous

MEASURAND	MAX MVAL = TIMES RATED VALUE 1,2	OR	2,4
Current L_1	☐		☒
Current L_2	☐		☒
Current L_3	☐		☒
Voltage L_{1-E}	☐		☒
Voltage L_{2-E}	☐		☒

MEASURAND	MAX MVAL = TIMES RATED VALUE		
	1,2	OR	2,4
Voltage L_{3-E}	☐		☒
Active power P	☐		☒
Reactive power Q	☐		☒
Frequency f	☐		☒
Voltage L_1-L_2	☐		☒

D

E.1.1 INTEROPERABILITY DOCUMENT

This document is adapted from the IEC 60870-5-104 standard. For this section the boxes indicate the following: ☒ – used in standard direction; ☐ – not used; ■ – cannot be selected in IEC 60870-5-104 standard.

1. SYSTEM OR DEVICE:

☐ System Definition

☐ Controlling Station Definition (Master)

☒ **Controlled Station Definition (Slave)**

2. NETWORK CONFIGURATION:

■ ~~Point-to-Point~~ ■ ~~Multipoint~~

■ ~~Multiple Point-to-Point~~ ■ ~~Multipoint Star~~

3. PHYSICAL LAYER

Transmission Speed (control direction):

Unbalanced Interchange Circuit V.24/V.28 Standard:	Unbalanced Interchange Circuit V.24/V.28 Recommended if >1200 bits/s:	Balanced Interchange Circuit X.24/X.27:
■ ~~100 bits/sec.~~	■ ~~2400 bits/sec.~~	■ ~~2400 bits/sec.~~
■ ~~200 bits/sec.~~	■ ~~4800 bits/sec.~~	■ ~~4800 bits/sec.~~
■ ~~300 bits/sec.~~	■ ~~9600 bits/sec.~~	■ ~~9600 bits/sec.~~
■ ~~600 bits/sec.~~		■ ~~19200 bits/sec.~~
■ ~~1200 bits/sec.~~		■ ~~38400 bits/sec.~~
		■ ~~56000 bits/sec.~~
		■ ~~64000 bits/sec.~~

Transmission Speed (monitor direction):

Unbalanced Interchange Circuit V.24/V.28 Standard:	Unbalanced Interchange Circuit V.24/V.28 Recommended if >1200 bits/s:	Balanced Interchange Circuit X.24/X.27:
■ ~~100 bits/sec.~~	■ ~~2400 bits/sec.~~	■ ~~2400 bits/sec.~~
■ ~~200 bits/sec.~~	■ ~~4800 bits/sec.~~	■ ~~4800 bits/sec.~~
■ ~~300 bits/sec.~~	■ ~~9600 bits/sec.~~	■ ~~9600 bits/sec.~~
■ ~~600 bits/sec.~~		■ ~~19200 bits/sec.~~
■ ~~1200 bits/sec.~~		■ ~~38400 bits/sec.~~
		■ ~~56000 bits/sec.~~
		■ ~~64000 bits/sec.~~

4. LINK LAYER

Link Transmission Procedure:	Address Field of the Link:
■ ~~Balanced Transmission~~	■ ~~Not Present (Balanced Transmission Only)~~
■ ~~Unbalanced Transmission~~	■ ~~One Octet~~
	■ ~~Two Octets~~
	■ ~~Structured~~
	■ ~~Unstructured~~
Frame Length (maximum length, number of octets): Not selectable in companion IEC 60870-5-104 standard	

When using an unbalanced link layer, the following Application Service Data Unit (ASDU) types are returned in class 2 messages (low priority) with the indicated causes of transmission:

- ~~The standard assignment of ASDUs to class 2 messages is used as follows~~:

- ~~A special assignment of ASDUs to class 2 messages is used as follows~~:

5. APPLICATION LAYER

Transmission Mode for Application Data:
Mode 1 (least significant octet first), as defined in Clause 4.10 of IEC 60870-5-4, is used exclusively in this companion standard.

Common Address of ASDU:

- ~~One Octet~~
- ☒ Two Octets

Information Object Address:

- ~~One Octet~~
- ~~Two Octets~~
- ☒ Three Octets
- ☒ Structured
- ☒ Unstructured

Cause of Transmission:

- ~~One Octet~~
- ☒ Two Octets (with originator address). Originator address is set to zero if not used.

Maximum Length of APDU: 253 (the maximum length may be reduced by the system.

Selection of standard ASDUs:

For the following lists, the boxes indicate the following: ☒ – used in standard direction; ☐ – not used; ■ – cannot be selected in IEC 60870-5-104 standard.

Process information in monitor direction

☒ <1> := Single-point information	M_SP_NA_1
■ ~~<2> := Single-point information with time tag~~	~~M_SP_TA_1~~
☐ <3> := Double-point information	M_DP_NA_1
■ ~~<4> := Double-point information with time tag~~	~~M_DP_TA_1~~
☐ <5> := Step position information	M_ST_NA_1
■ ~~<6> := Step position information with time tag~~	~~M_ST_TA_1~~
☐ <7> := Bitstring of 32 bits	M_BO_NA_1
■ ~~<8> := Bitstring of 32 bits with time tag~~	~~M_BO_TA_1~~
☐ <9> := Measured value, normalized value	M_ME_NA_1
■ ~~<10> := Measured value, normalized value with time tag~~	~~M_NE_TA_1~~
☐ <11> := Measured value, scaled value	M_ME_NB_1
■ ~~<12> := Measured value, scaled value with time tag~~	~~M_NE_TB_1~~
☒ <13> := Measured value, short floating point value	M_ME_NC_1
■ ~~<14> := Measured value, short floating point value with time tag~~	~~M_NE_TC_1~~
☒ <15> := Integrated totals	M_IT_NA_1
■ ~~<16> := Integrated totals with time tag~~	~~M_IT_TA_1~~
■ ~~<17> := Event of protection equipment with time tag~~	~~M_EP_TA_1~~
■ ~~<18> := Packed start events of protection equipment with time tag~~	~~M_EP_TB_1~~
■ ~~<19> := Packed output circuit information of protection equipment with time tag~~	~~M_EP_TC_1~~
☐ <20> := Packed single-point information with status change detection	M_SP_NA_1

☐ <21> := Measured value, normalized value without quantity descriptor	M_ME_ND_1
☒ <30> := Single-point information with time tag CP56Time2a	M_SP_TB_1
☐ <31> := Double-point information with time tag CP56Time2a	M_DP_TB_1
☐ <32> := Step position information with time tag CP56Time2a	M_ST_TB_1
☐ <33> := Bitstring of 32 bits with time tag CP56Time2a	M_BO_TB_1
☐ <34> := Measured value, normalized value with time tag CP56Time2a	M_ME_TD_1
☐ <35> := Measured value, scaled value with time tag CP56Time2a	M_ME_TE_1
☐ <36> := Measured value, short floating point value with time tag CP56Time2a	M_ME_TF_1
☒ <37> := Integrated totals with time tag CP56Time2a	M_IT_TB_1
☐ <38> := Event of protection equipment with time tag CP56Time2a	M_EP_TD_1
☐ <39> := Packed start events of protection equipment with time tag CP56Time2a	M_EP_TE_1
☐ <40> := Packed output circuit information of protection equipment with time tag CP56Time2a	M_EP_TF_1

Either the ASDUs of the set <2>, <4>, <6>, <8>, <10>, <12>, <14>, <16>, <17>, <18>, and <19> or of the set <30> to <40> are used.

Process information in control direction

☒ <45> := Single command	C_SC_NA_1
☐ <46> := Double command	C_DC_NA_1
☐ <47> := Regulating step command	C_RC_NA_1
☐ <48> := Set point command, normalized value	C_SE_NA_1
☐ <49> := Set point command, scaled value	C_SE_NB_1
☐ <50> := Set point command, short floating point value	C_SE_NC_1
☐ <51> := Bitstring of 32 bits	C_BO_NA_1
☒ <58> := Single command with time tag CP56Time2a	C_SC_TA_1
☐ <59> := Double command with time tag CP56Time2a	C_DC_TA_1
☐ <60> := Regulating step command with time tag CP56Time2a	C_RC_TA_1
☐ <61> := Set point command, normalized value with time tag CP56Time2a	C_SE_TA_1
☐ <62> := Set point command, scaled value with time tag CP56Time2a	C_SE_TB_1
☐ <63> := Set point command, short floating point value with time tag CP56Time2a	C_SE_TC_1
☐ <64> := Bitstring of 32 bits with time tag CP56Time2a	C_BO_TA_1

Either the ASDUs of the set <45> to <51> or of the set <58> to <64> are used.

System information in monitor direction

☒ <70> := End of initialization	M_EI_NA_1

System information in control direction

☒ <100> := Interrogation command	C_IC_NA_1
☒ <101> := Counter interrogation command	C_CI_NA_1
☒ <102> := Read command	C_RD_NA_1
☒ <103> := Clock synchronization command (see Clause 7.6 in standard)	C_CS_NA_1
■ ~~<104> := Test command~~	~~C_TS_NA_1~~
☒ <105> := Reset process command	C_RP_NA_1
■ <106> := Delay acquisition command	C_CD_NA_1
☒ <107> := Test command with time tag CP56Time2a	C_TS_TA_1

Parameter in control direction

☐ <110> := Parameter of measured value, normalized value	PE_ME_NA_1
☐ <111> := Parameter of measured value, scaled value	PE_ME_NB_1
☒ <112> := Parameter of measured value, short floating point value	PE_ME_NC_1
☐ <113> := Parameter activation	PE_AC_NA_1

File transfer

☐ <120> := File Ready	F_FR_NA_1
☐ <121> := Section Ready	F_SR_NA_1
☐ <122> := Call directory, select file, call file, call section	F_SC_NA_1
☐ <123> := Last section, last segment	F_LS_NA_1
☐ <124> := Ack file, ack section	F_AF_NA_1
☐ <125> := Segment	F_SG_NA_1
☐ <126> := Directory (blank or X, available only in monitor [standard] direction)	C_CD_NA_1

Type identifier and cause of transmission assignments
(station-specific parameters)

In the following table:

•Shaded boxes are not required.

•Black boxes are not permitted in this companion standard.

•Blank boxes indicate functions or ASDU not used.

•'**X**' if only used in the standard direction

TYPE IDENTIFICATION		CAUSE OF TRANSMISSION																	
		PERIODIC, CYCLIC	BACKGROUND SCAN	SPONTANEOUS	INITIALIZED	REQUEST OR REQUESTED	ACTIVATION	ACTIVATION CONFIRMATION	DEACTIVATION	DEACTIVATION CONFIRMATION	ACTIVATION TERMINATION	RETURN INFO CAUSED BY LOCAL CMD	FILE TRANSFER	INTERROGATED BY GROUP <NUMBER>	REQUEST BY GROUP <N> COUNTER REQ	UNKNOWN TYPE IDENTIFICATION	UNKNOWN CAUSE OF TRANSMISSION	UNKNOWN COMMON ADDRESS OF ASDU	UNKNOWN INFORMATION OBJECT ADDR	UNKNOWN INFORMATION OBJECT ADDR
NO.	MNEMONIC	1	2	3	4	5	6	7	8	9	10	11	12	13	20 to 36	37 to 41	44	45	46	47
<1>	M_SP_NA_1			X		X						X	X		X					
<2>	M_SP_TA_1																			
<3>	M_DP_NA_1																			
<4>	M_DP_TA_1																			
<5>	M_ST_NA_1																			
<6>	M_ST_TA_1																			
<7>	M_BO_NA_1																			
<8>	M_BO_TA_1																			
<9>	M_ME_NA_1																			

TYPE IDENTIFICATION		CAUSE OF TRANSMISSION																	
		PERIODIC, CYCLIC	BACKGROUND SCAN	SPONTANEOUS	INITIALIZED	REQUEST OR REQUESTED	ACTIVATION	ACTIVATION CONFIRMATION	DEACTIVATION	DEACTIVATION CONFIRMATION	ACTIVATION TERMINATION	RETURN INFO CAUSED BY LOCAL CMD	FILE TRANSFER	INTERROGATED BY GROUP <NUMBER>	REQUEST BY GROUP <N> COUNTER REQ	UNKNOWN TYPE IDENTIFICATION	UNKNOWN CAUSE OF TRANSMISSION	UNKNOWN COMMON ADDRESS OF ASDU	UNKNOWN INFORMATION OBJECT ADDR	UNKNOWN INFORMATION OBJECT ADDR
NO.	MNEMONIC	1	2	3	4	5	6	7	8	9	10	11	12	13	20 to 36	37 to 41	44	45	46	47
<10>	M_ME_TA_1																			
<11>	M_ME_NB_1																			
<12>	M_ME_TB_1																			
<13>	M_ME_NC_1	X		X		X									X					
<14>	M_ME_TC_1																			
<15>	M_IT_NA_1			X												X				
<16>	M_IT_TA_1																			
<17>	M_EP_TA_1																			
<18>	M_EP_TB_1																			
<19>	M_EP_TC_1																			
<20>	M_PS_NA_1																			
<21>	M_ME_ND_1																			
<30>	M_SP_TB_1			X								X	X							
<31>	M_DP_TB_1																			
<32>	M_ST_TB_1																			
<33>	M_BO_TB_1																			
<34>	M_ME_TD_1																			
<35>	M_ME_TE_1																			
<36>	M_ME_TF_1																			
<37>	M_IT_TB_1			X												X				
<38>	M_EP_TD_1																			
<39>	M_EP_TE_1																			
<40>	M_EP_TF_1																			
<45>	C_SC_NA_1						X	X	X	X	X									
<46>	C_DC_NA_1																			
<47>	C_RC_NA_1																			
<48>	C_SE_NA_1																			
<49>	C_SE_NB_1																			
<50>	C_SE_NC_1																			
<51>	C_BO_NA_1																			
<58>	C_SC_TA_1						X	X	X	X	X									
<59>	C_DC_TA_1																			
<60>	C_RC_TA_1																			

TYPE IDENTIFICATION		CAUSE OF TRANSMISSION																		
		PERIODIC, CYCLIC	BACKGROUND SCAN	SPONTANEOUS	INITIALIZED	REQUEST OR REQUESTED	ACTIVATION	ACTIVATION CONFIRMATION	DEACTIVATION	DEACTIVATION CONFIRMATION	ACTIVATION TERMINATION	RETURN INFO CAUSED BY LOCAL CMD	FILE TRANSFER	INTERROGATED BY GROUP <NUMBER>	REQUEST BY GROUP <N> COUNTER REQ	UNKNOWN TYPE IDENTIFICATION	UNKNOWN CAUSE OF TRANSMISSION	UNKNOWN COMMON ADDRESS OF ASDU	UNKNOWN INFORMATION OBJECT ADDR	UNKNOWN INFORMATION OBJECT ADDR
NO.	MNEMONIC	1	2	3	4	5	6	7	8	9	10	11	12	13	20 to 36	37 to 41	44	45	46	47
<61>	C_SE_TA_1																			
<62>	C_SE_TB_1																			
<63>	C_SE_TC_1																			
<64>	C_BO_TA_1																			
<70>	M_EI_NA_1*)				X															
<100>	C_IC_NA_1						X	X	X	X	X									
<101>	C_CI_NA_1						X	X			X									
<102>	C_RD_NA_1					X														
<103>	C_CS_NA_1			X			X	X												
<104>	C_TS_NA_1																			
<105>	C_RP_NA_1						X	X												
<106>	C_CD_NA_1																			
<107>	C_TS_TA_1																			
<110>	P_ME_NA_1																			
<111>	P_ME_NB_1																			
<112>	P_ME_NC_1						X	X							X					
<113>	P_AC_NA_1																			
<120>	F_FR_NA_1																			
<121>	F_SR_NA_1																			
<122>	F_SC_NA_1																			
<123>	F_LS_NA_1																			
<124>	F_AF_NA_1																			
<125>	F_SG_NA_1																			
<126>	F_DR_TA_1*)																			

6. BASIC APPLICATION FUNCTIONS

Station Initialization:

☒ Remote initialization

Cyclic Data Transmission:

☒ Cyclic data transmission

Read Procedure:

☒ Read procedure

Spontaneous Transmission:

☒ Spontaneous transmission

Double transmission of information objects with cause of transmission spontaneous:

The following type identifications may be transmitted in succession caused by a single status change of an information object. The particular information object addresses for which double transmission is enabled are defined in a project-specific list.

☐ Single point information: M_SP_NA_1, M_SP_TA_1, M_SP_TB_1, and M_PS_NA_1

☐ Double point information: M_DP_NA_1, M_DP_TA_1, and M_DP_TB_1

☐ Step position information: M_ST_NA_1, M_ST_TA_1, and M_ST_TB_1

☐ Bitstring of 32 bits: M_BO_NA_1, M_BO_TA_1, and M_BO_TB_1 (if defined for a specific project)

☐ Measured value, normalized value: M_ME_NA_1, M_ME_TA_1, M_ME_ND_1, and M_ME_TD_1

☐ Measured value, scaled value: M_ME_NB_1, M_ME_TB_1, and M_ME_TE_1

☐ Measured value, short floating point number: M_ME_NC_1, M_ME_TC_1, and M_ME_TF_1

Station interrogation:

☒ Global

☒ Group 1	☒ Group 5	☒ Group 9	☒ Group 13
☒ Group 2	☒ Group 6	☒ Group 10	☒ Group 14
☒ Group 3	☒ Group 7	☒ Group 11	☒ Group 15
☒ Group 4	☒ Group 8	☒ Group 12	☒ Group 16

Clock synchronization:

☒ Clock synchronization (optional, see Clause 7.6)

Command transmission:

☒ Direct command transmission

☐ Direct setpoint command transmission

☒ Select and execute command

☐ Select and execute setpoint command

☒ C_SE ACTTERM used

☒ No additional definition

☒ Short pulse duration (duration determined by a system parameter in the outstation)

☒ Long pulse duration (duration determined by a system parameter in the outstation)

☒ Persistent output

☒ Supervision of maximum delay in command direction of commands and setpoint commands

Maximum allowable delay of commands and setpoint commands: **10 s**

Transmission of integrated totals:

☒ Mode A: Local freeze with spontaneous transmission

☒ Mode B: Local freeze with counter interrogation

☒ Mode C: Freeze and transmit by counter-interrogation commands

☒ Mode D: Freeze by counter-interrogation command, frozen values reported simultaneously

☒ Counter read

☒ Counter freeze without reset

☒ Counter freeze with reset

☒ Counter reset

☒ General request counter

☒ Request counter group 1

☒ Request counter group 2

☒ Request counter group 3

☒ Request counter group 4

Parameter loading:

☒ Threshold value

☐ Smoothing factor

☐ Low limit for transmission of measured values

☐ High limit for transmission of measured values

Parameter activation:

☐ Activation/deactivation of persistent cyclic or periodic transmission of the addressed object

Test procedure:

☐ Test procedure

File transfer:

File transfer in monitor direction:

☐ Transparent file

☐ Transmission of disturbance data of protection equipment

☐ Transmission of sequences of events

☐ Transmission of sequences of recorded analog values

File transfer in control direction:

☐ Transparent file

Background scan:

☐ Background scan

Acquisition of transmission delay:

■ ~~Acquisition of transmission delay~~

Definition of time outs:

PARAMETER	DEFAULT VALUE	REMARKS	SELECTED VALUE
t_0	30 s	Timeout of connection establishment	120 s
t_1	15 s	Timeout of send or test APDUs	15 s
t_2	10 s	Timeout for acknowledgements in case of no data messages $t_2 < t_1$	10 s
t_3	20 s	Timeout for sending test frames in case of a long idle state	20 s

Maximum range of values for all time outs: 1 to 255 s, accuracy 1 s

Maximum number of outstanding I-format APDUs *k* and latest acknowledge APDUs (*w*):

PARAMETER	DEFAULT VALUE	REMARKS	SELECTED VALUE
k	12 APDUs	Maximum difference receive sequence number to send state variable	12 APDUs
w	8 APDUs	Latest acknowledge after receiving *w* I-format APDUs	8 APDUs

Maximum range of values *k*: 1 to 32767 (2^{15} – 1) APDUs, accuracy 1 APDU

Maximum range of values *w*: 1 to 32767 APDUs, accuracy 1 APDU
Recommendation: *w* should not exceed two-thirds of *k*.

Portnumber:

PARAMETER	VALUE	REMARKS
Portnumber	2404	In all cases

RFC 2200 suite:

RFC 2200 is an official Internet Standard which describes the state of standardization of protocols used in the Internet as determined by the Internet Architecture Board (IAB). It offers a broad spectrum of actual standards used in the Internet. The suitable selection of documents from RFC 2200 defined in this standard for given projects has to be chosen by the user of this standard.

☒ Ethernet 802.3

☐ Serial X.21 interface

☐ Other selection(s) from RFC 2200 (list below if selected)

E.1.2 POINT LIST

The IEC 60870-5-104 data points are configured through the **SETTINGS** ⇨ **PRODUCT SETUP** ⇨⇩ **COMMUNICATIONS** ⇨⇩ **DNP / IEC104 POINT LISTS** menu. See the Communications section of chapter 5 for details.

F.1.1 DNP V3.00 DEVICE PROFILE

The following table provides a 'Device Profile Document' in the standard format defined in the DNP 3.0 Subset Definitions Document.

Table F–1: DNP V3.00 DEVICE PROFILE (Sheet 1 of 3)

(Also see the IMPLEMENTATION TABLE in the following section)	
Vendor Name: **General Electric Multilin**	
Device Name: **UR Series Relay**	
Highest DNP Level Supported: For Requests: **Level 2** For Responses: **Level 2**	**Device Function:** ☐ Master ☒ **Slave**
Notable objects, functions, and/or qualifiers supported in addition to the Highest DNP Levels Supported (the complete list is described in the attached table): **Binary Inputs (Object 1)** **Binary Input Changes (Object 2)** **Binary Outputs (Object 10)** **Control Relay Output Block (Object 12)** **Binary Counters (Object 20)** **Frozen Counters (Object 21)** **Counter Change Event (Object 22)** **Frozen Counter Event (Object 23)** **Analog Inputs (Object 30)** **Analog Input Changes (Object 32)** **Analog Deadbands (Object 34)** **Time and Date (Object 50)** **File Transfer (Object 70)** **Internal Indications (Object 80)**	
Maximum Data Link Frame Size (octets): Transmitted: **292** Received: **292**	**Maximum Application Fragment Size (octets):** Transmitted: **configurable up to 2048** Received: **2048**
Maximum Data Link Re-tries: ☒ **None** ☐ Fixed at 3 ☐ Configurable	**Maximum Application Layer Re-tries:** ☒ **None** ☐ Configurable
Requires Data Link Layer Confirmation: ☒ Never ☐ Always ☐ Sometimes ☐ Configurable	

Table F–1: DNP V3.00 DEVICE PROFILE (Sheet 2 of 3)

Requires Application Layer Confirmation:

- ☐ Never
- ☐ Always
- ☒ When reporting Event Data
- ☒ When sending multi-fragment responses
- ☐ Sometimes
- ☐ Configurable

Timeouts while waiting for:

Data Link Confirm:	☒ None	☐ Fixed at ____	☐ Variable	☐ Configurable
Complete Appl. Fragment:	☒ **None**	☐ Fixed at ____	☐ Variable	☐ Configurable
Application Confirm:	☐ None	☒ **Fixed at 10 s**	☐ Variable	☐ Configurable
Complete Appl. Response:	☒ **None**	☐ Fixed at ____	☐ Variable	☐ Configurable

Others:

Transmission Delay:	**No intentional delay**
Need Time Interval:	**Configurable (default = 24 hrs.)**
Select/Operate Arm Timeout:	**10 s**
Binary input change scanning period:	**8 times per power system cycle**
Analog input change scanning period:	**500 ms**
Counter change scanning period:	**500 ms**
Frozen counter event scanning period:	**500 ms**
Unsolicited response notification delay:	**100 ms**
Unsolicited response retry delay	**configurable 0 to 60 sec.**

Sends/Executes Control Operations:

WRITE Binary Outputs	☒ **Never**	☐ Always	☐ Sometimes	☐ Configurable
SELECT/OPERATE	☐ Never	☒ **Always**	☐ Sometimes	☐ Configurable
DIRECT OPERATE	☐ Never	☒ **Always**	☐ Sometimes	☐ Configurable
DIRECT OPERATE – NO ACK	☐ Never	☒ **Always**	☐ Sometimes	☐ Configurable

Count > 1	☒ **Never**	☐ Always	☐ Sometimes	☐ Configurable
Pulse On	☐ Never	☐ Always	☒ **Sometimes**	☐ Configurable
Pulse Off	☐ Never	☐ Always	☒ **Sometimes**	☐ Configurable
Latch On	☐ Never	☐ Always	☒ **Sometimes**	☐ Configurable
Latch Off	☐ Never	☐ Always	☒ **Sometimes**	☐ Configurable
Queue	☒ **Never**	☐ Always	☐ Sometimes	☐ Configurable
Clear Queue	☒ **Never**	☐ Always	☐ Sometimes	☐ Configurable

Explanation of 'Sometimes': Object 12 points are mapped to UR Virtual Inputs. The persistence of Virtual Inputs is determined by the **VIRTUAL INPUT X TYPE** settings. Both "Pulse On" and "Latch On" operations perform the same function in the UR; that is, the appropriate Virtual Input is put into the "On" state. If the Virtual Input is set to "Self-Reset", it will reset after one pass of FlexLogic. The On/Off times and Count value are ignored. "Pulse Off" and "Latch Off" operations put the appropriate Virtual Input into the "Off" state. "Trip" and "Close" operations both put the appropriate Virtual Input into the "On" state.

Table F–1: DNP V3.00 DEVICE PROFILE (Sheet 3 of 3)

Reports Binary Input Change Events when no specific variation requested: ☐ Never ☒ **Only time-tagged** ☐ Only non-time-tagged ☐ Configurable	**Reports time-tagged Binary Input Change Events when no specific variation requested:** ☐ Never ☒ Binary Input Change With Time ☐ Binary Input Change With Relative Time ☐ Configurable (attach explanation)
Sends Unsolicited Responses: ☐ **Never** ☒ Configurable ☐ Only certain objects ☐ Sometimes (attach explanation) ☒ ENABLE/DISABLE unsolicited Function codes supported	**Sends Static Data in Unsolicited Responses:** ☒ Never ☐ When Device Restarts ☐ When Status Flags Change No other options are permitted.
Default Counter Object/Variation: ☐ No Counters Reported ☐ Configurable (attach explanation) ☒ **Default Object: 20** **Default Variation: 1** ☒ **Point-by-point list attached**	**Counters Roll Over at:** ☐ No Counters Reported ☐ Configurable (attach explanation) ☒ **16 Bits (Counter 8)** ☒ **32 Bits (Counters 0 to 7, 9)** ☐ Other Value: _____ ☒ **Point-by-point list attached**
Sends Multi-Fragment Responses: ☒ **Yes** ☐ No	

F

The following table identifies the variations, function codes, and qualifiers supported by the C70 in both request messages and in response messages. For static (non-change-event) objects, requests sent with qualifiers 00, 01, 06, 07, or 08, will be responded with qualifiers 00 or 01. Static object requests sent with qualifiers 17 or 28 will be responded with qualifiers 17 or 28. For change-event objects, qualifiers 17 or 28 are always responded.

Table F–2: IMPLEMENTATION TABLE (Sheet 1 of 4)

OBJECT			REQUEST		RESPONSE	
OBJECT NO.	VARIATION NO.	DESCRIPTION	FUNCTION CODES (DEC)	QUALIFIER CODES (HEX)	FUNCTION CODES (DEC)	QUALIFIER CODES (HEX)
1	0	Binary Input (Variation 0 is used to request default variation)	1 (read) 22 (assign class)	00, 01 (start-stop) 06 (no range, or all) 07, 08 (limited quantity) 17, 28 (index)		
	1	Binary Input	1 (read) 22 (assign class)	00, 01 (start-stop) 06 (no range, or all) 07, 08 (limited quantity) 17, 28 (index)	129 (response)	00, 01 (start-stop) 17, 28 (index) *(see Note 2)*
	2	Binary Input with Status	1 (read) 22 (assign class)	00, 01 (start-stop) 06 (no range, or all) 07, 08 (limited quantity) 17, 28 (index)	129 (response)	00, 01 (start-stop) 17, 28 (index) *(see Note 2)*
2	0	Binary Input Change (Variation 0 is used to request default variation)	1 (read)	06 (no range, or all) 07, 08 (limited quantity)		
	1	Binary Input Change without Time	1 (read)	06 (no range, or all) 07, 08 (limited quantity)	129 (response) 130 (unsol. resp.)	17, 28 (index)
	2	Binary Input Change with Time	1 (read)	06 (no range, or all) 07, 08 (limited quantity)	129 (response 130 (unsol. resp.)	17, 28 (index)
	3	Binary Input Change with Relative Time	1 (read)	06 (no range, or all) 07, 08 (limited quantity)		
10	0	Binary Output Status (Variation 0 is used to request default variation)	1 (read)	00, 01(start-stop) 06 (no range, or all) 07, 08 (limited quantity) 17, 28 (index)		
	2	Binary Output Status	1 (read)	00, 01 (start-stop) 06 (no range, or all) 07, 08 (limited quantity) 17, 28 (index)	129 (response)	00, 01 (start-stop) 17, 28 (index) *(see Note 2)*
12	1	Control Relay Output Block	3 (select) 4 (operate) 5 (direct op) 6 (dir. op, noack)	00, 01 (start-stop) 07, 08 (limited quantity) 17, 28 (index)	129 (response)	echo of request
20	0	Binary Counter (Variation 0 is used to request default variation)	1 (read) 7 (freeze) 8 (freeze noack) 9 (freeze clear) 10 (frz. cl. noack) 22 (assign class)	00, 01(start-stop) 06(no range, or all) 07, 08(limited quantity) 17, 28(index)		
	1	32-Bit Binary Counter	1 (read) 7 (freeze) 8 (freeze noack) 9 (freeze clear) 10 (frz. cl. noack) 22 (assign class)	00, 01 (start-stop) 06 (no range, or all) 07, 08 (limited quantity) 17, 28 (index)	129 (response)	00, 01 (start-stop) 17, 28 (index) *(see Note 2)*

Note 1: A default variation refers to the variation responded when variation 0 is requested and/or in class 0, 1, 2, or 3 scans. The default variations for object types 1, 2, 20, 21, 22, 23, 30, and 32 are selected via relay settings. See the Communications section in Chapter 5 for details. This optimizes the class 0 poll data size.

Note 2: For static (non-change-event) objects, qualifiers 17 or 28 are only responded when a request is sent with qualifiers 17 or 28, respectively. Otherwise, static object requests sent with qualifiers 00, 01, 06, 07, or 08, will be responded with qualifiers 00 or 01 (for change-event objects, qualifiers 17 or 28 are always responded.)

Note 3: Cold restarts are implemented the same as warm restarts – the C70 is not restarted, but the DNP process is restarted.

Table F–2: IMPLEMENTATION TABLE (Sheet 2 of 4)

OBJECT			REQUEST		RESPONSE	
OBJECT NO.	VARIATION NO.	DESCRIPTION	FUNCTION CODES (DEC)	QUALIFIER CODES (HEX)	FUNCTION CODES (DEC)	QUALIFIER CODES (HEX)
20 cont'd	2	16-Bit Binary Counter	1 (read) 7 (freeze) 8 (freeze noack) 9 (freeze clear) 10 (frz. cl. noack) 22 (assign class)	00, 01 (start-stop) 06 (no range, or all) 07, 08 (limited quantity) 17, 28 (index)	129 (response)	00, 01 (start-stop) 17, 28 (index) *(see Note 2)*
	5	32-Bit Binary Counter without Flag	1 (read) 7 (freeze) 8 (freeze noack) 9 (freeze clear) 10 (frz. cl. noack) 22 (assign class)	00, 01 (start-stop) 06 (no range, or all) 07, 08 (limited quantity) 17, 28 (index)	129 (response)	00, 01 (start-stop) 17, 28 (index) *(see Note 2)*
	6	16-Bit Binary Counter without Flag	1 (read) 7 (freeze) 8 (freeze noack) 9 (freeze clear) 10 (frz. cl. noack) 22 (assign class)	00, 01 (start-stop) 06 (no range, or all) 07, 08 (limited quantity) 17, 28 (index)	129 (response)	00, 01 (start-stop) 17, 28 (index) *(see Note 2)*
21	0	Frozen Counter (Variation 0 is used to request default variation)	1 (read) 22 (assign class)	00, 01 (start-stop) 06 (no range, or all) 07, 08 (limited quantity) 17, 28 (index)		
	1	32-Bit Frozen Counter	1 (read) 22 (assign class)	00, 01 (start-stop) 06 (no range, or all) 07, 08 (limited quantity) 17, 28 (index)	129 (response)	00, 01 (start-stop) 17, 28 (index) *(see Note 2)*
	2	16-Bit Frozen Counter	1 (read) 22 (assign class)	00, 01 (start-stop) 06 (no range, or all) 07, 08 (limited quantity) 17, 28 (index)	129 (response)	00, 01 (start-stop) 17, 28 (index) *(see Note 2)*
	9	32-Bit Frozen Counter without Flag	1 (read) 22 (assign class)	00, 01 (start-stop) 06 (no range, or all) 07, 08 (limited quantity) 17, 28 (index)	129 (response)	00, 01 (start-stop) 17, 28 (index) *(see Note 2)*
	10	16-Bit Frozen Counter without Flag	1 (read) 22 (assign class)	00, 01 (start-stop) 06 (no range, or all) 07, 08 (limited quantity) 17, 28 (index)	129 (response)	00, 01 (start-stop) 17, 28 (index) *(see Note 2)*
22	0	Counter Change Event (Variation 0 is used to request default variation)	1 (read)	06 (no range, or all) 07, 08 (limited quantity)		
	1	32-Bit Counter Change Event	1 (read)	06 (no range, or all) 07, 08 (limited quantity)	129 (response) 130 (unsol. resp.)	17, 28 (index)
	2	16-Bit Counter Change Event	1 (read)	06 (no range, or all) 07, 08 (limited quantity)	129 (response) 130 (unsol. resp.)	17, 28 (index)
	5	32-Bit Counter Change Event with Time	1 (read)	06 (no range, or all) 07, 08 (limited quantity)	129 (response) 130 (unsol. resp.)	17, 28 (index)
	6	16-Bit Counter Change Event with Time	1 (read)	06 (no range, or all) 07, 08 (limited quantity)	129 (response) 130 (unsol. resp.)	17, 28 (index)
23	0	Frozen Counter Event (Variation 0 is used to request default variation)	1 (read)	06 (no range, or all) 07, 08 (limited quantity)		
	1	32-Bit Frozen Counter Event	1 (read)	06 (no range, or all) 07, 08 (limited quantity)	129 (response) 130 (unsol. resp.)	17, 28 (index)
	2	16-Bit Frozen Counter Event	1 (read)	06 (no range, or all) 07, 08 (limited quantity)	129 (response) 130 (unsol. resp.)	17, 28 (index)

Note 1: A default variation refers to the variation responded when variation 0 is requested and/or in class 0, 1, 2, or 3 scans. The default variations for object types 1, 2, 20, 21, 22, 23, 30, and 32 are selected via relay settings. See the Communications section in Chapter 5 for details. This optimizes the class 0 poll data size.

Note 2: For static (non-change-event) objects, qualifiers 17 or 28 are only responded when a request is sent with qualifiers 17 or 28, respectively. Otherwise, static object requests sent with qualifiers 00, 01, 06, 07, or 08, will be responded with qualifiers 00 or 01 (for change-event objects, qualifiers 17 or 28 are always responded.)

Note 3: Cold restarts are implemented the same as warm restarts – the C70 is not restarted, but the DNP process is restarted.

Table F–2: IMPLEMENTATION TABLE (Sheet 3 of 4)

OBJECT			REQUEST		RESPONSE	
OBJECT NO.	VARIATION NO.	DESCRIPTION	FUNCTION CODES (DEC)	QUALIFIER CODES (HEX)	FUNCTION CODES (DEC)	QUALIFIER CODES (HEX)
23 cont'd	5	32-Bit Frozen Counter Event with Time	1 (read)	06 (no range, or all) 07, 08 (limited quantity)	129 (response) 130 (unsol. resp.)	17, 28 (index)
	6	16-Bit Frozen Counter Event with Time	1 (read)	06 (no range, or all) 07, 08 (limited quantity)	129 (response) 130 (unsol. resp.)	17, 28 (index)
30	0	Analog Input (Variation 0 is used to request default variation)	1 (read) 22 (assign class)	00, 01 (start-stop) 06 (no range, or all) 07, 08 (limited quantity) 17, 28 (index)		
	1	32-Bit Analog Input	1 (read) 22 (assign class)	00, 01 (start-stop) 06 (no range, or all) 07, 08 (limited quantity) 17, 28 (index)	129 (response)	00, 01 (start-stop) 17, 28 (index) *(see Note 2)*
	2	16-Bit Analog Input	1 (read) 22 (assign class)	00, 01 (start-stop) 06 (no range, or all) 07, 08 (limited quantity) 17, 28 (index)	129 (response)	00, 01 (start-stop) 17, 28 (index) *(see Note 2)*
	3	32-Bit Analog Input without Flag	1 (read) 22 (assign class)	00, 01 (start-stop) 06 (no range, or all) 07, 08 (limited quantity) 17, 28 (index)	129 (response)	00, 01 (start-stop) 17, 28 (index) *(see Note 2)*
	4	16-Bit Analog Input without Flag	1 (read) 22 (assign class)	00, 01 (start-stop) 06 (no range, or all) 07, 08 (limited quantity) 17, 28 (index)	129 (response)	00, 01 (start-stop) 17, 28 (index) *(see Note 2)*
	5	short floating point	1 (read) 22 (assign class)	00, 01 (start-stop) 06(no range, or all) 07, 08(limited quantity) 17, 28(index)	129 (response)	00, 01 (start-stop) 17, 28 (index) *(see Note 2)*
32	0	Analog Change Event (Variation 0 is used to request default variation)	1 (read)	06 (no range, or all) 07, 08 (limited quantity)		
	1	32-Bit Analog Change Event without Time	1 (read)	06 (no range, or all) 07, 08 (limited quantity)	129 (response) 130 (unsol. resp.)	17, 28 (index)
	2	16-Bit Analog Change Event without Time	1 (read)	06 (no range, or all) 07, 08 (limited quantity)	129 (response) 130 (unsol. resp.)	17, 28 (index)
	3	32-Bit Analog Change Event with Time	1 (read)	06 (no range, or all) 07, 08 (limited quantity)	129 (response) 130 (unsol. resp.)	17, 28 (index)
	4	16-Bit Analog Change Event with Time	1 (read)	06 (no range, or all) 07, 08 (limited quantity)	129 (response) 130 (unsol. resp.)	17, 28 (index)
	5	short floating point Analog Change Event without Time	1 (read)	06 (no range, or all) 07, 08 (limited quantity)	129 (response) 130 (unsol. resp.)	17, 28 (index)
	7	short floating point Analog Change Event with Time	1 (read)	06 (no range, or all) 07, 08 (limited quantity)	129 (response) 130 (unsol. resp.)	17, 28 (index)
34	0	Analog Input Reporting Deadband (Variation 0 is used to request default variation)	1 (read)	00, 01 (start-stop) 06 (no range, or all) 07, 08 (limited quantity) 17, 28 (index)		
	1	16-bit Analog Input Reporting Deadband (default – see Note 1)	1 (read)	00, 01 (start-stop) 06 (no range, or all) 07, 08 (limited quantity) 17, 28 (index)	129 (response)	00, 01 (start-stop) 17, 28 (index) *(see Note 2)*
			2 (write)	00, 01 (start-stop) 07, 08 (limited quantity) 17, 28 (index)		

Note 1: A default variation refers to the variation responded when variation 0 is requested and/or in class 0, 1, 2, or 3 scans. The default variations for object types 1, 2, 20, 21, 22, 23, 30, and 32 are selected via relay settings. See the Communications section in Chapter 5 for details. This optimizes the class 0 poll data size.

Note 2: For static (non-change-event) objects, qualifiers 17 or 28 are only responded when a request is sent with qualifiers 17 or 28, respectively. Otherwise, static object requests sent with qualifiers 00, 01, 06, 07, or 08, will be responded with qualifiers 00 or 01 (for change-event objects, qualifiers 17 or 28 are always responded.)

Note 3: Cold restarts are implemented the same as warm restarts – the C70 is not restarted, but the DNP process is restarted.

Table F–2: IMPLEMENTATION TABLE (Sheet 4 of 4)

OBJECT			REQUEST		RESPONSE	
OBJECT NO.	VARIATION NO.	DESCRIPTION	FUNCTION CODES (DEC)	QUALIFIER CODES (HEX)	FUNCTION CODES (DEC)	QUALIFIER CODES (HEX)
34 cont'd	2	32-bit Analog Input Reporting Deadband	1 (read)	00, 01 (start-stop) 06 (no range, or all) 07, 08 (limited quantity) 17, 28 (index)	129 (response)	00, 01 (start-stop) 17, 28 (index) *(see Note 2)*
			2 (write)	00, 01 (start-stop) 07, 08 (limited quantity) 17, 28 (index)		
	3	Short floating point Analog Input Reporting Deadband	1 (read)	00, 01 (start-stop) 06 (no range, or all) 07, 08 (limited quantity) 17, 28 (index)	129 (response)	00, 01 (start-stop) 17, 28 (index) *(see Note 2)*
50	1	Time and Date (default – see Note 1)	1 (read) 2 (write)	00, 01 (start-stop) 06 (no range, or all) 07 (limited qty=1) 08 (limited quantity) 17, 28 (index)	129 (response)	00, 01 (start-stop) 17, 28 (index) *(see Note 2)*
52	2	Time Delay Fine			129 (response)	07 (limited quantity) (quantity = 1)
60	0	Class 0, 1, 2, and 3 Data	1 (read) 20 (enable unsol) 21 (disable unsol) 22 (assign class)	06 (no range, or all)		
	1	Class 0 Data	1 (read) 22 (assign class)	06 (no range, or all)		
	2	Class 1 Data	1 (read) 20 (enable unsol) 21 (disable unsol) 22 (assign class)	06 (no range, or all) 07, 08 (limited quantity)		
	3	Class 2 Data				
	4	Class 3 Data				
70	0	File event - any variation	1 (read)	06 (no range, or all) 07, 08 (limited quantity)		
			22 (assign class)	06 (no range, or all)		
	2	File authentication	29 (authenticate)	5b (free format)	129 (response)	5b (free format)
	3	File command	25 (open) 27 (delete)	5b (free format)		
	4	File command status	26 (close) 30 (abort)	5b (free format)	129 (response) 130 (unsol. resp.)	5b (free format)
	5	File transfer	1 (read) 2 (write)	5b (free format)	129 (response) 130 (unsol. resp.)	5b (free format)
	6	File transfer status			129 (response) 130 (unsol. resp.)	5b (free format)
	7	File descriptor	28 (get file info.)	5b (free format)	129 (response) 130 (unsol. resp.)	5b (free format)
80	1	Internal Indications	1 (read)	00, 01 (start-stop) (index =7)	129 (response)	00, 01 (start-stop)
			2 (write) *(see Note 3)*	00 (start-stop) (index =7)		
---		No Object (function code only) *see Note 3*	13 (cold restart)			
---		No Object (function code only)	14 (warm restart)			
---		No Object (function code only)	23 (delay meas.)			

Note 1: A default variation refers to the variation responded when variation 0 is requested and/or in class 0, 1, 2, or 3 scans. The default variations for object types 1, 2, 20, 21, 22, 23, 30, and 32 are selected via relay settings. See the Communications section in Chapter 5 for details. This optimizes the class 0 poll data size.

Note 2: For static (non-change-event) objects, qualifiers 17 or 28 are only responded when a request is sent with qualifiers 17 or 28, respectively. Otherwise, static object requests sent with qualifiers 00, 01, 06, 07, or 08, will be responded with qualifiers 00 or 01 (for change-event objects, qualifiers 17 or 28 are always responded.)

Note 3: Cold restarts are implemented the same as warm restarts – the C70 is not restarted, but the DNP process is restarted.

F.2.1 BINARY INPUT POINTS

The DNP binary input data points are configured through the **PRODUCT SETUP** ⇨⇩ **COMMUNICATIONS** ⇨⇩ **DNP / IEC104 POINT LISTS** ⇨ **BINARY INPUT / MSP POINTS** menu. See the Communications section of Chapter 5 for details. When a freeze function is performed on a binary counter point, the frozen value is available in the corresponding frozen counter point.

BINARY INPUT POINTS

Static (Steady-State) Object Number: **1**

Change Event Object Number: **2**

Request Function Codes supported: **1 (read), 22 (assign class)**

Static Variation reported when variation 0 requested: **2 (Binary Input with status), Configurable**

Change Event Variation reported when variation 0 requested: **2 (Binary Input Change with Time), Configurable**

Change Event Scan Rate: **8 times per power system cycle**

Change Event Buffer Size: **500**

Default Class for All Points: **1**

Supported Control Relay Output Block fields: Pulse On, Pulse Off, Latch On, Latch Off, Paired Trip, Paired Close.

BINARY OUTPUT STATUS POINTS

Object Number: **10**

Request Function Codes supported: **1 (read)**

Default Variation reported when Variation 0 requested: **2 (Binary Output Status)**

CONTROL RELAY OUTPUT BLOCKS

Object Number: **12**

Request Function Codes supported: **3 (select), 4 (operate), 5 (direct operate), 6 (direct operate, noack)**

Table F–3: BINARY/CONTROL OUTPUTS

POINT	NAME/DESCRIPTION
0	Virtual Input 1
1	Virtual Input 2
2	Virtual Input 3
3	Virtual Input 4
4	Virtual Input 5
5	Virtual Input 6
6	Virtual Input 7
7	Virtual Input 8
8	Virtual Input 9
9	Virtual Input 10
10	Virtual Input 11
11	Virtual Input 12
12	Virtual Input 13
13	Virtual Input 14
14	Virtual Input 15
15	Virtual Input 16
16	Virtual Input 17
17	Virtual Input 18
18	Virtual Input 19
19	Virtual Input 20
20	Virtual Input 21
21	Virtual Input 22
22	Virtual Input 23
23	Virtual Input 24
24	Virtual Input 25
25	Virtual Input 26
26	Virtual Input 27
27	Virtual Input 28
28	Virtual Input 29
29	Virtual Input 30
30	Virtual Input 31
31	Virtual Input 32

Table F–3: BINARY/CONTROL OUTPUTS

POINT	NAME/DESCRIPTION
32	Virtual Input 33
33	Virtual Input 34
34	Virtual Input 35
35	Virtual Input 36
36	Virtual Input 37
37	Virtual Input 38
38	Virtual Input 39
39	Virtual Input 40
40	Virtual Input 41
41	Virtual Input 42
42	Virtual Input 43
43	Virtual Input 44
44	Virtual Input 45
45	Virtual Input 46
46	Virtual Input 47
47	Virtual Input 48
48	Virtual Input 49
49	Virtual Input 50
50	Virtual Input 51
51	Virtual Input 52
52	Virtual Input 53
53	Virtual Input 54
54	Virtual Input 55
55	Virtual Input 56
56	Virtual Input 57
57	Virtual Input 58
58	Virtual Input 59
59	Virtual Input 60
60	Virtual Input 61
61	Virtual Input 62
62	Virtual Input 63
63	Virtual Input 64

F.2.3 COUNTERS

The following table lists both Binary Counters (Object 20) and Frozen Counters (Object 21). When a freeze function is performed on a Binary Counter point, the frozen value is available in the corresponding Frozen Counter point.

BINARY COUNTERS

Static (Steady-State) Object Number: **20**

Change Event Object Number: **22**

Request Function Codes supported: **1 (read), 7 (freeze), 8 (freeze noack), 9 (freeze and clear), 10 (freeze and clear, noack), 22 (assign class)**

Static Variation reported when variation 0 requested: **1 (32-Bit Binary Counter with Flag)**

Change Event Variation reported when variation 0 requested: **1 (32-Bit Counter Change Event without time)**

Change Event Buffer Size: **10**

Default Class for all points: **3**

FROZEN COUNTERS

Static (Steady-State) Object Number: **21**

Change Event Object Number: **23**

Request Function Codes supported: **1 (read)**

Static Variation reported when variation 0 requested: **1 (32-Bit Frozen Counter with Flag)**

Change Event Variation reported when variation 0 requested: **1 (32-Bit Frozen Counter Event without time)**

Change Event Buffer Size: **10**

Default Class for all points: **3**

F

Table F–4: BINARY AND FROZEN COUNTERS

POINT INDEX	NAME/DESCRIPTION
0	Digital Counter 1
1	Digital Counter 2
2	Digital Counter 3
3	Digital Counter 4
4	Digital Counter 5
5	Digital Counter 6
6	Digital Counter 7
7	Digital Counter 8
8	Oscillography Trigger Count
9	Events Since Last Clear

A counter freeze command has no meaning for counters 8 and 9. C70 Digital Counter values are represented as 32-bit integers. The DNP 3.0 protocol defines counters to be unsigned integers. Care should be taken when interpreting negative counter values.

F.2.4 ANALOG INPUTS

The DNP analog input data points are configured through the **PRODUCT SETUP** ⇨⇩ **COMMUNICATIONS** ⇨⇩ **DNP / IEC104 POINT LISTS** ⇨ **ANALOG INPUT / MME POINTS** menu. See the Communications section of Chapter 5 for details.

It is important to note that 16-bit and 32-bit variations of analog inputs are transmitted through DNP as signed numbers. Even for analog input points that are not valid as negative values, the maximum positive representation is 32767 for 16-bit values and 2147483647 for 32-bit values. This is a DNP requirement.

The deadbands for all Analog Input points are in the same units as the Analog Input quantity. For example, an Analog Input quantity measured in volts has a corresponding deadband in units of volts. This is in conformance with DNP Technical Bulletin 9809-001: Analog Input Reporting Deadband. Relay settings are available to set default deadband values according to data type. Deadbands for individual Analog Input Points can be set using DNP Object 34.

Static (Steady-State) Object Number: **30**

Change Event Object Number: **32**

Request Function Codes supported: **1 (read), 2 (write, deadbands only), 22 (assign class)**

Static Variation reported when variation 0 requested: **1 (32-Bit Analog Input)**

Change Event Variation reported when variation 0 requested: **1 (Analog Change Event without Time)**

Change Event Scan Rate: defaults to **500 ms**

Change Event Buffer Size: **256**

Default Class for all Points: **2**

F

F

G.1.1 RADIUS SERVER CONFIGURATION

The following procedure is an example of how to set up a simple RADIUS server. You install the RADIUS server software on a separate computer. In this example, we use FreeRADIUS third-party software.

1. Download and install FreeRADIUS from www.freeradius.org as the RADIUS server. This is a Windows 32-bit installation that is known to work. If you try another third-party tool and it does not work, use the FreeRADIUS software.
2. Open the radiusd.conf file in the <Path_to_Radius>\etc\raddb folder, locate the "bind_address" field, and enter your RADIUS server IP address. An example is

   ```
   bind_address = 10.14.61.122
   ```

   Text editor software that supports direct editing and saving of UNIX text encodings and line breaks, such as EditPad Lite, is needed for this editing.
3. In the users.conf file in the <Path_to_Radius>\etc\raddb folder, add the following text to configure a user "Tester" with an Administrator role.

   ```
   Tester               User-Password == "TesterPw1#"
                       GE-UR-Role = Administrator
   ```
4. In the clients.conf file in the <Path_to_Radius>\etc\raddb folder, add the following text to define the UR as a RADIUS client, where the client IP address is 10.14.61.132, the shared secret specified here is also configured on the UR device for successful authentication, and the shortname is a short, optional alias that can be used in place of the IP address.

   ```
   client 10.14.61.132 {
   secret = Testing!123
   shortname = ur1-test
   }
   ```

   Alternatively, you can specify one secret for a network of clients, where in the following example the clients are all within the 10.14.61.0/24 subnet and the shared secret specified here is also configured on all the UR devices in the subnet for successful authentication.

   ```
   client 10.14.61.0/24 {
   secret = Testing!123
   shortname = net1-test
   }
   ```
5. In the <Path_to_Radius>\etc\raddb folder, create a file called dictionary.ge and add the following content.

   ```
   # ############################################################
   #  GE VSAs
   ############################################################

   VENDOR                          GE              2910

   # Management authorization
   BEGIN-VENDOR                    GE

   # Role ID
   ATTRIBUTE                       GE-UR-Role      1           integer

   # GE-UR-ROLE values
   VALUE GE-UR-Role                Administrator   1
   VALUE GE-UR-Role                Supervisor      2
   VALUE GE-UR-Role                Engineer        3
   VALUE GE-UR-Role                Operator        4
   VALUE GE-UR-Role                Observer        5

   END-VENDOR                      GE
   ############################################################
   ```
6. In the dictionary file in the <Path_to_Radius>\etc\raddb folder, add the following line.

```
$INCLUDE dictionary.ge
```

For example, the file can look like the following:

```
$INCLUDE ../share/freeradius/dictionary
$INCLUDE dictionary.ge
```

7. For the first start, run the RADIUS server in debug mode to ensure that there are no compiling errors.

   ```
   <Path_to_Radius>/start_radiusd_debug.bat
   ```

8. Set up the RADIUS parameters on the UR as follows.

   If logging in, select **Device** for the **Authentication Type**, and use Administrator for the **User Name**. The default password is "ChangeMe1#".

   Access **Settings > Product Setup > Security**. Configure the IP address (10.14.61.122 in this example) and ports (default values in this example) for the RADIUS server. Leave the GE vendor ID field at the default of 2910. Update the RADIUS shared secret (Testing!123 in this example) as specified in the clients.conf file. Restart the relay for the IP address and port changes to take effect.

9. Verify operation. Log in to the UR software as follows. In the login window, select **Server** as the **Authentication Type**, enter the user name entered (for example user name Tester and password "TesterPw1#"). Check that the RADIUS server log file shows the access with an "Access-Accept" entry.

H.1.1 REVISION HISTORY

Table H–1: REVISION HISTORY

MANUAL P/N	C70 REVISION	RELEASE DATE	ECO
1601-9015-P1	5.2x	23 October 2006	URX-230
1601-9015-P2	5.2x	24 January 2007	URX-232
1601-9015-R1	5.4x	26 June 2007	URX-242
1601-9015-R2	5.4x	31 August 2007	URX-246
1601-9015-R3	5.4x	17 October 2007	URX-251
1601-9015-S1	5.5x	7 December 2007	URX-253
1601-9015-S2	5.5x	22 February 2008	URX-258
1601-9015-S3	5.5x	12 March 2008	URX-260
1601-9015-T1	5.6x	27 June 2008	08-0390
1601-9015-U1	5.7x	29 May 2009	09-0938
1601-9015-U2	5.7x	30 September 2009	09-1165
1601-9015-V1	5.8x	29 May 2010	09-1457
1601-9015-V2	5.8x	04 January 2011	11-2237
1601-9015-W1	5.9x	12 January 2011	11-2227
1601-9015-X1	6.0x	21 December 2011	11-2840
1601-9015-X2	6.0x	5 April 2012	12-3254
1601-9015-Y1	7.0x	30 September 2012	12-3529
1601-9015-Y2	7.0x	11 November 2012	12-3601
1601-9015-Z1	7.1x	30 March 2013	13-0126
1601-9015-AA1	7.2x	1 August 2013	13-0401
1601-9015-AA2	7.2x	31 December 2014	14-1732
1601-9015-AA3	7.2x	1 September 2015	15-2215
1601-9015-AA4	7.2x	15 April 2016	16-2786
1601-9015-AA5	7.2x	15 August 2017	17-3978
1601-9015-AA6	7.2x	24 May 2021	21-6381
1601-9015-AA7	7.2x	11 August 2021	21-6542

H.1.2 CHANGES TO THE C70 MANUAL

Table H–2: MAJOR UPDATES FOR C70 MANUAL REVISION AA7

PAGE (AA6)	PAGE (AA7)	CHANGE	DESCRIPTION
---	---	Update	General revision
7-15	7-15	Add	Added Instantaneous Protection Elements Trip Security section to self-tests

Table H–3: MAJOR UPDATES FOR C70 MANUAL REVISION AA6 (Sheet 1 of 2)

PAGE (AA5)	PAGE (AA6)	CHANGE	DESCRIPTION
---	---	Update	General revision
---	---	Add	Added redundant power supply to Order Codes and Control Power sections
2-	2-	Update	Updated Dropout Level specification for several elements, changing percent range to a number
2-	2-	Delete	Deleted end-of-manufacturing modules 2G from order code tables
2-8	2-8	Add	Added order codes for Inter-relay communication modules in U column for horizontal unit

Table H–3: MAJOR UPDATES FOR C70 MANUAL REVISION AA6 (Sheet 2 of 2)

PAGE (AA5)	PAGE (AA6)	CHANGE	DESCRIPTION
3-	3-	Update	Updated Typical Wiring Diagram at CPU module, CPU Module Communications Wiring figure, and Options for IRIG-B Connection figure
6-	6-	Add	Added Remote Resources to Actual Values menu and added its Field Unit section
B-	B-	Update	Updated Modbus memory map and F codes
G-	G-	Update	Updated RADIUS appendix

Table H–4: MAJOR UPDATES FOR C70 MANUAL REVISION AA5

PAGE (AA4)	PAGE (AA5)	CHANGE	DESCRIPTION
---	---	Update	General revision
5-125	5-125	Add	Added Phase TOC I2t FlexLogic operands to the FlexLogic operand table for C70
5-158	5-158	Add	Added I2t content to Phase TOC settings section and added logic diagram specific to C70

Table H–5: MAJOR UPDATES FOR C70 MANUAL REVISION AA4

PAGE (AA3)	PAGE (AA4)	CHANGE	DESCRIPTION
---	---	Update	General revision, including updated branding from GE Digital Energy to GE Grid Solutions
---	---	Delete	Deleted EAC logo from title page and deleted EAC certification from Approvals specifications because document not translated into Russian

Table H–6: MAJOR UPDATES FOR C70 MANUAL REVISION AA3

PAGE (AA2)	PAGE (AA3)	CHANGE	DESCRIPTION
---	---	Update	General revision throughout document
---	---	Update	Updated numbers of elements throughout document
---	---	Add	Added EAC compliance information throughout, including logo on title page, rear panel, added specifications, added life expectancy and decommissioning, added sections on Uninstall and Clear Files and Data, Repairs, Storage, and Disposal
2-15	2-15	Add	Added UR Signal Processing section
4-22	4-22	Delete	Deleted Standard Faceplate section on how to customize LED and blank panels. Clear Lexan front cover (part number 1501-0014) no longer being sold. Units with blank LED panels no longer being sold.
5-120	5-120	Update	Updated FlexLogic operands table
A-	A-	Update	Updated FlexAnalog and FlexInteger tables
B-	B-	Update	Updated Modbus memory map and F codes

Table H–7: MAJOR UPDATES FOR C70 MANUAL REVISION AA2 (Sheet 1 of 2)

PAGE (AA1)	PAGE (AA2)	CHANGE	DESCRIPTION
---	---	Update	General revision throughout document
---	---	Update	Updated references to digital inputs/outputs to contact inputs/outputs for consistency
5-23	5-23	Add	Added Syslog Format section
5-31	5-31	Add	Added Far-End Fault Indication (FEFI) section
5-56	5-56	Delete	Deleted Ethernet Global Data (EGD) settings, which do not apply to the C70

Table H–7: MAJOR UPDATES FOR C70 MANUAL REVISION AA2 (Sheet 2 of 2)

PAGE (AA1)	PAGE (AA2)	CHANGE	DESCRIPTION
B-	B-	Update	Updated Modbus memory map and F codes
H-6	H-6	Update	Updated product warranty from 24 months to 10 years

Table H–8: MAJOR UPDATES FOR C70 MANUAL REVISION AA1

PAGE (Z1)	PAGE (AA1)	CHANGE	DESCRIPTION
---	---	Add	Added content for IEC 60870-5-103 throughout document
2-	2-	Update	Updated order codes
2-	2-	Update	Updated specifications
8-	---	Delete	Deleted chapter 8 on security, moving content to other chapters
---	10-	Add	Added Maintenance chapter, moving content from other chapters and adding new instructions to replace the battery
---	D-	Add	Added new appendix on IEC 60870-5-103 interoperability

H.2.1 STANDARD ABBREVIATIONS

A ..... Ampere
AC ..... Alternating Current
A/D ..... Analog to Digital
AE ..... Accidental Energization, Application Entity
AMP ..... Ampere
ANG ..... Angle
ANSI ..... American National Standards Institute
AR ..... Automatic Reclosure
ASDU ..... Application-layer Service Data Unit
ASYM ..... Asymmetry
AUTO ..... Automatic
AUX ..... Auxiliary
AVG ..... Average

BCS ..... Best Clock Selector
BER ..... Bit Error Rate
BF ..... Breaker Fail
BFI ..... Breaker Failure Initiate
BKR ..... Breaker
BLK ..... Block
BLKG ..... Blocking
BNC ..... Bayonet Neill-Concelman
BPNT ..... Breakpoint of a characteristic
BRKR ..... Breaker

CAP ..... Capacitor
CC ..... Coupling Capacitor
CCVT ..... Coupling Capacitor Voltage Transformer
CFG ..... Configure / Configurable
.CFG ..... Filename extension for oscillography files
CHK ..... Check
CHNL ..... Channel
CLS ..... Close
CLSD ..... Closed
CMND ..... Command
CMPRSN ..... Comparison
CO ..... Contact Output
COM ..... Communication
COMM ..... Communications
COMP ..... Compensated, Comparison
CONN ..... Connection
CONT ..... Continuous, Contact
CO-ORD ..... Coordination
CPU ..... Central Processing Unit
CRC ..... Cyclic Redundancy Code
CRT, CRNT .... Current
CSA ..... Canadian Standards Association
CT ..... Current Transformer
CVT ..... Capacitive Voltage Transformer

D/A ..... Digital to Analog
DC (dc) ..... Direct Current
DD ..... Disturbance Detector
DFLT ..... Default
DGNST ..... Diagnostics
DI ..... Digital Input
DIFF ..... Differential
DIR ..... Directional
DISCREP ..... Discrepancy
DIST ..... Distance
DMD ..... Demand
DNP ..... Distributed Network Protocol
DPO ..... Dropout
DSP ..... Digital Signal Processor
dt ..... Rate of Change
DTT ..... Direct Transfer Trip
DUTT ..... Direct Under-reaching Transfer Trip

EAD ..... Expert Arc Detector
ENCRMNT ..... Encroachment
EPRI ..... Electric Power Research Institute
.EVT ..... Filename extension for event recorder files
EXT ..... Extension, External

F ..... Field
FAIL ..... Failure
FD ..... Fault Detector
FDH ..... Fault Detector high-set
FDL ..... Fault Detector low-set
FLA ..... Full Load Current
FO ..... Fiber Optic
FREQ ..... Frequency
FSK ..... Frequency-Shift Keying
FTP ..... File Transfer Protocol
FxE ..... FlexElement™
FWD ..... Forward

G ..... Generator
GE ..... General Electric
GND ..... Ground
GNTR ..... Generator
GOOSE ..... General Object Oriented Substation Event
GPS ..... Global Positioning System

HARM ..... Harmonic / Harmonics
HCT ..... High Current Time
HGF ..... High-Impedance Ground Fault (CT)
HIZ ..... High-Impedance and Arcing Ground
HMI ..... Human-Machine Interface
HTTP ..... Hyper Text Transfer Protocol
HYB ..... Hybrid

I ..... Instantaneous
I_0 ..... Zero Sequence current
I_1 ..... Positive Sequence current
I_2 ..... Negative Sequence current
IA ..... Phase A current
IAB ..... Phase A minus B current
IB ..... Phase B current
IBC ..... Phase B minus C current
IC ..... Phase C current
ICA ..... Phase C minus A current
ID ..... Identification
IED ..... Intelligent Electronic Device
IEC ..... International Electrotechnical Commission
IEEE ..... Institute of Electrical and Electronic Engineers
IG ..... Ground (not residual) current
Igd ..... Differential Ground current
IN ..... CT Residual Current (3I0) or Input
INC SEQ ..... Incomplete Sequence
INIT ..... Initiate
INST ..... Instantaneous
INV ..... Inverse
I/O ..... Input/Output
IOC ..... Instantaneous Overcurrent
IOV ..... Instantaneous Overvoltage
IRIG ..... Inter-Range Instrumentation Group
ISO ..... International Standards Organization
IUV ..... Instantaneous Undervoltage

K0 ..... Zero Sequence Current Compensation
kA ..... kiloAmpere
kV ..... kiloVolt

LED ..... Light Emitting Diode
LEO ..... Line End Open
LFT BLD ..... Left Blinder
LOOP ..... Loopback
LPU ..... Line Pickup
LRA ..... Locked-Rotor Current
LTC ..... Load Tap-Changer

M ..... Machine
mA ..... MilliAmpere
MAG ..... Magnitude
MAN ..... Manual / Manually
MAX ..... Maximum
MIC ..... Model Implementation Conformance
MIN ..... Minimum, Minutes
MMI ..... Man Machine Interface
MMS ..... Manufacturing Message Specification
MRT ..... Minimum Response Time
MSG ..... Message
MTA ..... Maximum Torque Angle
MTR ..... Motor
MVA ..... MegaVolt-Ampere (total 3-phase)

MVA_A ..... MegaVolt-Ampere (phase A)
MVA_B ..... MegaVolt-Ampere (phase B)
MVA_C ..... MegaVolt-Ampere (phase C)
MVAR ..... MegaVar (total 3-phase)
MVAR_A..... MegaVar (phase A)
MVAR_B..... MegaVar (phase B)
MVAR_C ..... MegaVar (phase C)
MVARH ..... MegaVar-Hour
MW..... MegaWatt (total 3-phase)
MW_A..... MegaWatt (phase A)
MW_B ..... MegaWatt (phase B)
MW_C ..... MegaWatt (phase C)
MWH ..... MegaWatt-Hour

N..... Neutral
N/A, n/a ..... Not Applicable
NEG ..... Negative
NMPLT ..... Nameplate
NOM..... Nominal
NTR..... Neutral

O ..... Over
OC, O/C ..... Overcurrent
O/P, Op..... Output
OP ..... Operate
OPER ..... Operate
OPERATG..... Operating
O/S ..... Operating System
OSI ..... Open Systems Interconnect
OSB..... Out-of-Step Blocking
OUT..... Output
OV ..... Overvoltage
OVERFREQ ... Overfrequency
OVLD ..... Overload

P..... Phase
PC ..... Phase Comparison, Personal Computer
PCNT ..... Percent
PF..... Power Factor (total 3-phase)
PF_A ..... Power Factor (phase A)
PF_B ..... Power Factor (phase B)
PF_C ..... Power Factor (phase C)
PFLL..... Phase and Frequency Lock Loop
PHS..... Phase
PICS..... Protocol Implementation & Conformance Statement
PKP ..... Pickup
PLC ..... Power Line Carrier
POS..... Positive
POTT..... Permissive Over-reaching Transfer Trip
PRESS ..... Pressure
PP ..... Power Profile
PRI ..... Primary
PROT ..... Protection
PSEL ..... Presentation Selector
pu ..... Per Unit
PUIB..... Pickup Current Block
PUIT ..... Pickup Current Trip
PUSHBTN ..... Pushbutton
PUTT..... Permissive Under-reaching Transfer Trip
PWM ..... Pulse Width Modulated
PWR..... Power

QUAD..... Quadrilateral

R..... Rate, Reverse
RCA..... Reach Characteristic Angle
REF ..... Reference
REM ..... Remote
REV..... Reverse
RI..... Reclose Initiate
RIP ..... Reclose In Progress
RGT BLD..... Right Blinder
RMA ..... Return Materials Authorization
RMS ..... Root Mean Square
ROCOF ..... Rate of Change of Frequency
ROD ..... Remote Open Detector
RST ..... Reset
RSTR ..... Restrained
RTD..... Resistance Temperature Detector
RTU..... Remote Terminal Unit

RX (Rx)..... Receive, Receiver

s..... second
S ..... Sensitive
SAT ..... CT Saturation
SBO ..... Select Before Operate
SCADA..... Supervisory Control and Data Acquisition
SEC ..... Secondary
SEL ..... Select / Selector / Selection
SENS ..... Sensitive
SEQ ..... Sequence
SFTP..... Secure Shell (SSH) File Transfer Protocol, Secure File Transfer Protocol
SIR..... Source Impedance Ratio
SNTP ..... Simple Network Time Protocol
SRC ..... Source
SSB..... Single Side Band
SSEL..... Session Selector
STATS..... Statistics
SUPN..... Supervision
SUPV ..... Supervise / Supervision
SV ..... Supervision, Service
SYNC..... Synchrocheck
SYNCHCHK.... Synchrocheck

T..... Time, transformer
TC ..... Thermal Capacity
TCP..... Transmission Control Protocol
TCU ..... Thermal Capacity Used
TD MULT ..... Time Dial Multiplier
TEMP..... Temperature
TFTP..... Trivial File Transfer Protocol
THD ..... Total Harmonic Distortion
TMR..... Timer
TOC ..... Time Overcurrent
TOV ..... Time Overvoltage
TRANS..... Transient
TRANSF ..... Transfer
TSEL..... Transport Selector
TUC ..... Time Undercurrent
TUV..... Time Undervoltage
TX (Tx)..... Transmit, Transmitter

U ..... Under
UC..... Undercurrent
UCA ..... Utility Communications Architecture
UDP ..... User Datagram Protocol
UL ..... Underwriters Laboratories
UNBAL..... Unbalance
UR..... Universal Relay
URC..... Universal Recloser Control
.URS ..... Filename extension for settings files
UV..... Undervoltage

V/Hz..... Volts per Hertz
V_0 ..... Zero Sequence voltage
V_1 ..... Positive Sequence voltage
V_2 ..... Negative Sequence voltage
VA ..... Phase A voltage
VAB..... Phase A to B voltage
VAG ..... Phase A to Ground voltage
VARH ..... Var-hour voltage
VB ..... Phase B voltage
VBA..... Phase B to A voltage
VBG ..... Phase B to Ground voltage
VC ..... Phase C voltage
VCA..... Phase C to A voltage
VCG ..... Phase C to Ground voltage
VF ..... Variable Frequency
VIBR ..... Vibration
VT ..... Voltage Transformer
VTFF ..... Voltage Transformer Fuse Failure
VTLOS ..... Voltage Transformer Loss Of Signal

WDG ..... Winding
WH..... Watt-hour
w/ opt ..... With Option
WRT..... With Respect To

X ..... Reactance
XDUCER..... Transducer

H

XFMR ..... Transformer

Z..... Impedance, Zone

H.3.1 GE MULTILIN WARRANTY

For products shipped as of 1 October 2013, GE Grid Solutions warrants most of its GE manufactured products for 10 years. For warranty details including any limitations and disclaimers, see the GE Grid Solutions Terms and Conditions at https://www.gegridsolutions.com/multilin/warranty.htm

For products shipped before 1 October 2013, the standard 24-month warranty applies.

Numerics

10BASE-F
  settings 5-29, 5-30

A

ABBREVIATIONS H-4
AC CURRENT INPUTS 2-22, 3-12, 5-97
AC VOLTAGE INPUTS 2-22, 3-13
ACCESS VIOLATION MESSAGE 1-15
ACTIVATING THE RELAY 1-20, 4-26
ACTIVE SETTING GROUP 5-143
ACTUAL VALUES
  metering 6-11
  product information 6-25
  status 6-3
ADMINISTRATOR
  no automatic logout from front panel 5-19
ALARM LEDs 5-75
ANSI DEVICE NUMBERS 2-2
APPARENT POWER 2-22, 6-16
APPLICATION EXAMPLES
  breaker trip circuit integrity 5-234
  contact inputs 5-251
APPROVALS 2-28
ARCHITECTURE 5-118
AUDIT LIST OF PORT NUMBERS 5-29
AUTOMATIC VOLTAGE REGULATOR
  FlexLogic operands 5-120
  Modbus registers B-50
  settings 5-227
  specifications 2-17
AUXILIARY OVERVOLTAGE
  FlexLogic operands 5-120
  logic 5-197
  Modbus registers B-44
  settings 5-197
  specifications 2-19
AUXILIARY VOLTAGE CHANNEL 3-13
AUXILIARY VOLTAGE METERING 6-16
AWG WIRE SIZE 3-12, 3-36, 3-39

B

BANK PHASE OVERVOLTAGE
  FlexLogic operands 5-121
  Modbus registers B-40
  settings 5-201
  specifications 2-19
  theory of operation 8-1
BANKS 5-6, 5-97, 5-98
BATTERY
  disposal 10-5
  replace 10-3
BATTERY FAILURE 7-11
BINARY INPUT POINTS F-8
BINARY OUTPUT POINTS F-9
BLOCK DIAGRAM 1-3
BLOCK SETTING 5-5
BREAKER CONTROL
  control of 2 breakers 4-23
  description 4-22
  dual breaker logic 5-105, 5-106
  FlexLogic operands 5-122
  settings 5-103
BREAKER FAILURE
  description 5-183
  determination 5-184
  FlexLogic operands 5-121
  logic 5-187, 5-188
  main path sequence 5-184
  settings 5-182, 5-185
  specifications 2-20
BREAKER FLASHOVER
  FlexLogic operands 5-121
  logic 5-242
  Modbus registers B-18
  settings 5-238
  specifications 2-20
BREAKER RESTRIKE
  FlexLogic operands 5-121
  logic 5-245
  settings 5-243
BREAKER-AND-A-HALF SCHEME 5-6
BRICK
  remote resources actual values 6-22
BRIGHTNESS 5-24

C

C37.94 COMMUNICATIONS 3-41, 3-43
Capacitor 5-122
CAPACITOR CONTROL
  actual values 6-19
  FlexLogic operands 5-122
  Modbus registers B-25, B-50
  settings 5-221
  specifications 2-17
CAUTIONS 1-1
CE APPROVALS 2-28
CHANNELS
  banks 5-97, 5-98
CIRCUIT MONITORING APPLICATIONS 5-233
CLEANING 2-28
CLEAR
  files and records 10-8
CLEAR RECORDS 5-25, 7-2
CLEAR RELAY RECORDS
  Modbus registers B-65
  settings 5-25
CLOCK
  setting date and time 7-2
  settings 5-63
COMMANDS MENU 7-1

COMMUNICATIONS
10BASE-F 5-30
connecting to the UR 1-8, 1-16
CRC-16 error checking B-2
DNP 5-37, F-1
G.703 3-37
HTTP 5-55
IEC 60870-5-10 5-57
IEC 60870-5-104 protocol 5-56
IEC 61850 5-256
inter-relay communications 2-25
Modbus 5-35, 5-63, B-1, B-4
Modbus registers B-29
network 5-29, 5-30
overview 1-18
RS232 3-28
RS485 ..... 3-31, 5-27
settings 5-29, 5-30, 5-37, 5-42, 5-56, 5-57, 5-63
specifications 2-24, 2-25
UCA/MMS 5-259
web server 5-55
COMPATIBILITY 1-3
COMTRADE B-7
CONDUCTED RFI 2-27
CONTACT INPUTS
actual values 6-3
dry connections 3-20
FlexLogic operands 5-128
Modbus registers B-14, B-19, B-59, B-61
settings 5-250
specifications 2-22
thresholds 5-250
wet connections 3-20
CONTACT OUTPUTS
actual values 6-4
FlexLogic operands 5-128
Modbus registers B-14, B-19, B-71
settings 5-253
CONTROL ELEMENTS 5-210
CONTROL POWER
description 3-12
specifications 2-24
CONTROL PUSHBUTTONS
FlexLogic operands 5-120
Modbus registers B-65
settings 5-78
specifications 2-21
COUNTERS
actual values 6-5
settings 5-235
CPU WIRING 3-28
CRC ALARM 5-93
CRC-16 ALGORITHM B-2
CRITICAL FAILURE RELAY 2-24, 3-11
CSA APPROVAL 2-28
CT BANKS
settings 5-97
CT INPUTS 3-13, 5-6, 5-97
CT WIRING 3-13
CURRENT BANK 5-97
CURRENT DIFFERENTIAL
Modbus registers B-18
CURRENT HARMONICS 2-22, 6-18
CURRENT METERING
actual values 6-14
specifications 2-21
CURVES
definite time 5-149, 5-192
FlexCurves 5-110, 5-148
IAC 5-147
IEC 5-146
IEEE 5-145
inverse time undervoltage 5-192
types 5-144
CYBERSENTRY
FlexLogic operands 5-120
RS485 port limitation 5-16
system logs 5-22

D

DATA FORMATS, MODBUS B-74
DATA LOGGER
clearing 5-25, 7-2
Modbus B-7
Modbus registers B-15, B-31
settings 5-72
specifications 2-21
via COMTRADE B-7
DATE 7-2
DCMA INPUTS 6-21
Modbus registers B-22, B-72
settings 5-266
specifications 2-23
DCMA OUTPUTS
description 3-25
Modbus registers B-47
settings 5-269
specifications 2-24
DECOMMISSION 10-8
DEFINITE TIME CURVE 5-149, 5-192
DELETE FILES AND RECORDS 10-8
DESIGN 1-3
DEVICE ID 5-257
DEVICE PROFILE DOCUMENT F-1
DIELECTRIC STRENGTH 3-11
DIGITAL COUNTERS
actual values 6-5
FlexLogic operands 5-122
logic 5-236
Modbus registers B-10, B-12, B-13, B-14, B-54
settings 5-235
DIGITAL ELEMENTS
application example 5-234
FlexLogic operands 5-123
logic 5-233
Modbus registers B-45
settings 5-232
DIGITAL OUTPUTS
see entry for CONTACT OUTPUTS
DIMENSIONS 3-1, 3-3
DIRECT DEVICES
actual values 6-8
Modbus registers B-23
settings 5-261
DIRECT I/O
see also DIRECT INPUTS and DIRECT OUTPUTS
application example 5-262, 5-263
configuration examples 5-87, 5-90, 5-93, 5-94
settings 5-87, 5-93, 5-94, 5-261

DIRECT INPUTS
actual values ... 6-8
application example ... 5-262, 5-263
clearing counters ... 7-2
FlexLogic operands ... 5-128
Modbus registers ... B-14, B-15, B-23, B-66
settings ... 5-261
specifications ... 2-23
DIRECT OUTPUTS
application example ... 5-262, 5-263
clearing counters ... 7-2
Modbus registers ... B-14, B-15, B-66
settings ... 5-261
DIRECT RING BREAK MESSAGE ... 7-12
DIRECTIONAL OVERCURRENT
see PHASE, GROUND, and NEUTRAL DIRECTIONAL entries
DIRECTIONAL POLARIZATION ... 5-155
DISCONNECT SWITCH
FlexLogic operands ... 5-127
logic ... 5-109
Modbus registers ... B-42
settings ... 5-107
DISPLAY ... 1-18, 4-22, 5-24
DISPOSAL ... 10-11
DISTURBANCE DETECTOR
FlexLogic™ operands ... 5-126
internal ... 5-100
DNA-1 BIT PAIR ... 5-259
DNP COMMUNICATIONS
binary counters ... F-10
binary input points ... F-8
binary output points ... F-9
control relay output blocks ... F-9
device profile document ... F-1
frozen counters ... F-10
implementation table ... F-4
Modbus registers ... B-29
settings ... 5-37

E

ELECTROSTATIC DISCHARGE ... 2-27
ELEMENTS ... 5-4
EMAIL ADDRESS FOR SUPPORT ... 1-2
END OF LIFE ... 10-11
ENERVISTA UR SETUP
creating a site list ... 4-1
event recorder ... 4-2
firmware upgrades ... 4-2
installation ... 1-5
introduction ... 4-1
oscillography ... 4-2
overview ... 4-1
requirements ... 1-5
ENHANCED FRONT PANEL
Rev. 1 and 2 explained ... 3-1
EQUATIONS
definite time curve ... 5-149, 5-192
FlexCurve ... 5-148
I²t curves ... 5-148
IAC curves ... 5-147
IEC curves ... 5-146
IEEE curves ... 5-145
EQUIPMENT MISMATCH ERROR ... 7-10
ETHERNET
actual values ... 6-6
configuration ... 1-8
Modbus registers ... B-15
quick connect ... 1-10
settings ... 5-29, 5-30
EVENT CAUSE INDICATORS ... 4-15, 4-16
EVENT RECORDER
actual values ... 6-23
clearing ... 5-25, 7-2
Modbus ... B-8
Modbus registers ... B-21
specifications ... 2-21
via EnerVista software ... 4-2
EVENTS
syslog ... 5-23
EVENTS SETTING ... 5-5
EXCEPTION RESPONSES ... B-6

F

F485 ... 1-18
FACEPLATE ... 3-1, 3-3
FACEPLATE PANELS ... 4-13
FACTORY DEFAULT RESET ... 5-8
FAR-END FAULT INDICATION ... 5-31
FAST FORM-C RELAY ... 2-24
FAST TRANSIENT TESTING ... 2-27
FAX NUMBER ... 1-2
FEATURES ... 2-1
FIBER SIGNAL LOSS DETECTION ... 5-31
FILE TRANSFER BY IEC 61850 ... C-2
FILES
delete ... 10-8
FIRMWARE REVISION ... 6-25
FIRMWARE UPGRADES ... 4-2
FLASH MEMORY ... 10-8
FLASH MEMORY DATA STORAGE ... 3-12
FLASH MESSAGES ... 5-24
FLEX STATE PARAMETERS
actual values ... 6-6, 6-7
Modbus registers ... B-19, B-45
settings ... 5-84
specifications ... 2-20
FLEXANALOG ... A-1
FLEXCURVES
equation ... 5-148
Modbus registers ... B-54
settings ... 5-110
specifications ... 2-20
table ... 5-111
FLEXCURVES™
Modbus registers ... B-34
FLEXELEMENTS
actual values ... 6-19
direction ... 5-139
FlexLogic operands ... 5-123
hysteresis ... 5-139
Modbus registers ... B-47, B-49
pickup ... 5-139
scheme logic ... 5-138
settings ... 5-137, 5-138, 5-141
specifications ... 2-20

FLEXLOGIC
editing with EnerVista UR Setup 4-2
equation editor 5-136
error messages 7-10
example 5-118, 5-131
example equation 5-213
gate characteristics 5-130
locking to a serial number 4-9
Modbus registers B-36
operands 5-119, 5-120
operators 5-130
rules 5-130
security 4-8
specifications 2-20
timers 5-136
worksheet 5-133
FLEXLOGIC EQUATION EDITOR 5-136
FLEXLOGIC TIMERS
Modbus registers B-37
settings 5-136
FLEXLOGIC™
locking equation entries 4-8
FORCE CONTACT INPUTS 5-273
FORCE CONTACT OUTPUTS 5-274
FORCE TRIGGER 6-24
FORM-A RELAY
high impedance circuits 3-15
outputs 3-14, 3-15
specifications 2-24
FORM-C RELAY
outputs 3-14
specifications 2-24
FREQUENCY METERING
actual values 6-17
Modbus registers B-17
settings 5-99
specifications 2-22
FREQUENCY RATE OF CHANGE
Modbus registers B-15
FREQUENCY TRACKING 5-99, 6-19
FREQUENCY, NOMINAL 5-98
FUNCTION SETTING 5-4
FUSE 2-23
FUSE FAILURE
see VT FUSE FAILURE
Fuses not field-replaceable 10-9

G

G.703 ..... 3-36, 3-37, 3-38
G.703 WIRE SIZE 3-36
GATEWAY ADDRESS 5-32
GE TYPE IAC CURVES 5-147
GROUND CURRENT METERING 6-15
GROUND IOC
FlexLogic™ operands 5-123
logic 5-175
Modbus registers B-39
settings 5-174
GROUND TIME OVERCURRENT
see entry for GROUND TOC
GROUND TOC
FlexLogic™ operands 5-123
logic 5-174
Modbus registers B-39
settings 5-173
specifications 2-17
GROUP 1 SWITCH AFTER POWERUP 5-143
GROUPED ELEMENTS 5-143
GSSE 5-258, 5-259, 5-260, 6-5
GUARANTEE H-7

H

HARDFIBER
remote resources actual values 6-22
HARMONIC CONTENT 6-18
HARMONICS
actual values 6-18
Harmonics
specifications 2-22
HELP 1-2
HTTP PROTOCOL 5-55

I

IAC CURVES 5-147
IEC 60870-5-103
settings 5-57
IEC 60870-5-103 PROTOCOL
interoperability document D-1
IEC 60870-5-104 PROTOCOL
interoperability document E-1
settings 5-56
IEC 61850 GOOSE ANALOGS
settings 5-264
IEC 61850 GOOSE UINTEGERS
settings 5-265
IEC 61850 PROTOCOL
device ID 5-258
DNA2 assignments 5-260
error messages 7-13
FILE TRANSFER C-2
Modbus registers B-54, B-55, B-56, B-57, B-58, B-59, B-69
remote inputs 5-258
settings 5-42
UserSt-1 bit pair 5-260
IEC 870-5-103
explained 2-7
IEC CURVES 5-146
IED SETUP 1-5
IEEE C37.94 COMMUNICATIONS 3-41, 3-43
IEEE CURVES 5-145
IN SERVICE INDICATOR 1-20, 7-10
INPUTS
AC current 2-22, 5-97
AC voltage 2-22, 5-98
contact inputs 2-22, 5-250, 5-273
DCmA inputs 2-23, 3-25
direct inputs 2-23
IRIG-B 2-23, 3-32
remote inputs 2-23, 5-256, 5-258, 5-259
RTD inputs 3-25
virtual 5-252
INSPECTION CHECKLIST 1-2

INSTALLATION
communications 3-28, 3-29
CT inputs 3-12, 3-13
RS485 3-31
settings 5-95
INSTANTANEOUS OVERCURRENT
see PHASE, GROUND, and NEUTRAL IOC entries
INTER-RELAY COMMUNICATIONS 2-25
INTRODUCTION 1-3
INVERSE TIME UNDERVOLTAGE 5-192
IOC
see PHASE, GROUND, and NEUTRAL IOC entries
IP ADDRESS 1-7, 5-29, 5-30
enter on front panel 1-19, 4-22
gateway 5-32
IP RATING 2-27
IP54 for enhanced front panel 3-1
IRIG-B
connection 3-32
CPU wiring 3-28
error messages 7-12
specifications 2-23

K

KEYPAD 1-19, 4-22

L

LAMPTEST 7-3
LANGUAGE 5-24
LATCHING OUTPUTS
application example 5-254, 5-255
error messages 7-13
settings 5-253
specifications 2-24
LED INDICATORS 4-14, 4-15, 4-16, 4-17, 5-75
LED TEST
FlexLogic operand 5-128
settings 5-73
specifications 2-21
LINK POWER BUDGET 2-25
LOCAL SETTING AUTHORIZATION 4-2
LOG OUT
Administrator manually from front panel 5-19
LOGIC GATES 5-130
LOGS, SYSTEM 5-22
LOST PASSWORD 5-8
LOW ON MEMORY MESSAGE 7-15

M

MAINTENANCE
battery 10-3
module replacement 10-1
replace battery message 7-11
MAINTENANCE COMMANDS 7-3
MANUFACTURING DATE 6-25
MAXIMUM CT/VT WIRE SIZE 3-12
MEMORY MAP DATA FORMATS B-74
MENU HIERARCHY 1-19, 4-24
MENU NAVIGATION 1-19, 4-23
METERING
conventions 6-11, 6-12
current 2-21
frequency 2-22
power 2-22
voltage 2-21
Metering
THD specifications 2-22
METERING CONVENTIONS 6-12
MODBUS
data logger B-7
event recorder B-8
exception responses B-6
execute operation B-5
flex state parameters 5-85
function code 03/04h B-4
function code 05h B-5
function code 06h B-5
function code 10h B-6
introduction B-1
memory map data formats B-74
obtaining files B-7
oscillography B-7
read/write settings/actual values B-4
settings 5-35, 5-63
store multiple settings B-6
store single setting B-5
supported function codes B-4
user map 5-63, B-14, B-34
MODEL INFORMATION 6-25
MODIFICATION FILE NUMBER 6-25
MODULE FAILURE ERROR 7-10, 7-11
MODULES
communications 3-28, 3-29
CT 3-13
CT/VT 3-12, 5-6
direct inputs/outputs 3-35
insertion 10-1
order codes 2-13
power supply 3-11
transducer I/O 3-26
VT 3-13
withdrawal 10-1
MONITORING ELEMENTS 5-237
MOUNTING 3-1, 3-3

N

NAMEPLATE 1-2
NEGATIVE SEQUENCE DIRECTIONAL OC
Modbus registers B-42
NEGATIVE SEQUENCE DIRECTIONAL OVERCURRENT
characteristics 5-180
FlexLogic operands 5-124
logic 5-181
settings 5-178, 5-181
specifications 2-18
NEGATIVE SEQUENCE IOC
FlexLogic operands 5-124
logic 5-177
Modbus registers B-40
settings 5-177
specifications 2-18

NEGATIVE SEQUENCE OVERVOLTAGE
FlexLogic operands 5-124
logic 5-196
Modbus registers B-41
settings 5-196
specifications 2-19
NEGATIVE SEQUENCE TOC
FlexLogic operands 5-124
logic 5-176
Modbus registers B-40
settings 5-176
specifications 2-18
NEUTRAL CURRENT UNBALANCE
actual values 6-20
commands 7-7
FlexLogic operands 5-124
Modbus registers B-21, B-24, B-51
settings 5-168
specifications 2-19
theory of operation 8-13
NEUTRAL DIRECTIONAL OVERCURRENT
FlexLogic™ operands 5-124
logic 5-168
polarization 5-166
settings 5-163
specifications 2-18
NEUTRAL INSTANTANEOUS OVERCURRENT
see entry for NEUTRAL IOC
NEUTRAL IOC
FlexLogic™ operands 5-124
logic 5-163
Modbus registers B-38
settings 5-162
specifications 2-17
NEUTRAL OVERVOLTAGE
FlexLogic operands 5-124
logic 5-195
Modbus registers B-44
settings 5-195
specifications 2-19
NEUTRAL TIME OVERCURRENT
see entry for NEUTRAL TOC
NEUTRAL TOC
FlexLogic™ operands 5-124
logic 5-162
Modbus registers B-38
settings 5-161
specifications 2-17
NEUTRAL VOLTAGE UNBALANCE
actual values 6-20
commands 7-5
FlexLogic operands 5-125
Modbus registers B-21, B-24, B-51
settings 5-205
specifications 2-19
theory of operation 8-6
NON-VOLATILE DATA STORAGE 3-12
NON-VOLATILE LATCHES
FlexLogic operands 5-123
Modbus registers B-54
settings 5-142
specifications 2-20

O

OBTAIN LIST OF PORT NUMBERS 5-29
ONE SHOTS 5-130
OPERATING TEMPERATURE 2-26
OPERATING TIMES 2-17
ORDER CODES 2-8, 2-9, 2-10, 2-11, 6-25, 7-3
ORDER CODES, UPDATING 7-3
ORDERING 2-8, 2-9, 2-10, 2-11
OSCILLATORY TRANSIENT TESTING 2-27
OSCILLOGRAPHY
actual values 6-23
clearing 5-25, 7-2
Modbus B-7
Modbus registers B-19, B-31
settings 5-69
specifications 2-21
via COMTRADE B-7
via EnerVista software 4-2
OUT OF SERVICE 2-3, 5-8
OUTPUTS
contact outputs 5-253
control power 2-24
critical failure relay 2-24
Fast Form-C relay 2-24
Form-A relay 2-23, 3-14, 3-15
Form-C relay 2-24, 3-14
latching outputs 2-24, 5-253
remote outputs 5-259, 5-260
virtual outputs 5-256
OVERCURRENT CURVE TYPES 5-144
OVERCURRENT CURVES
definite time 5-149
FlexCurves 5-148
I2T 5-148
IAC 5-147
IEC 5-146
IEEE 5-145
OVERVOLTAGE
auxiliary 2-19, 5-197
bank phase 5-201
negative sequence 5-196
negative-sequence 2-19
neutral 2-19, 5-195
phase 2-19, 5-194

P

PANEL CUTOUT 3-1, 3-3
PARALLEL REDUNDANCY PROTOCOL
actual values 6-9
explained 5-31
settings 5-29
specifications 2-25
PARITY 5-27
PASSWORD SECURITY
FlexLogic operands 5-129
PASSWORDS
change does not take relay out of service 2-3, 5-8
changing 4-27
for settings templates 4-5
lost password 5-8
Modbus registers B-18, B-28, B-29
overview 1-20
reset to factory defaults 5-8
security 2-3
settings 2-3
PC SOFTWARE
see entry for ENERVISTA UR SETUP

PERMISSIVE FUNCTIONS 5-192
PER-UNIT QUANTITY 5-4
PHASE ANGLE METERING 6-12
PHASE CURRENT METERING 6-14
PHASE CURRENT UNBALANCE
actual values 6-21
commands 7-6
FlexLogic operands 5-123
Modbus registers B-21, B-23, B-52
settings 5-157
specifications 2-18
theory of operation 8-10
PHASE DIRECTIONAL OC
Modbus registers B-42
PHASE DIRECTIONAL OVERCURRENT
FlexLogic operands 5-125
logic 5-156
phase A polarization 5-154
settings 5-153, 5-155
specifications 2-18
PHASE INSTANTANEOUS OVERCURRENT
see entry for PHASE IOC
PHASE IOC
FlexLogic™ operands 5-125
logic 5-152
Modbus registers B-38
specifications 2-17
PHASE OVERVOLTAGE
FlexLogic operands 5-125
logic 5-194
Modbus registers B-41
settings 5-194
specifications 2-19
PHASE ROTATION 5-99
PHASE TIME OVERCURRENT
see entry for PHASE TOC
PHASE TOC
FlexLogic™ operands 5-125
logic 5-151
Modbus registers B-37
settings 5-149
specifications 2-17
PHASE UNDERVOLTAGE
FlexLogic operands 5-126
logic 5-193
Modbus registers B-41
settings 5-193
specifications 2-19
PHONE NUMBER FOR SUPPORT 1-2
PORT NUMBER LIST 5-29
POWER METERING
specifications 2-22
values 6-16
POWER OFF, SAVE DATA FIRST 3-12
POWER SUPPLY
description 3-11
low range 2-23
removal to replace battery 10-3
RH/RL vs SH/SL 10-3
specifications 2-23
POWER SYSTEM
Modbus registers B-34
PREFERENCES
Modbus registers B-29
PROCES BUS MODULE
remote resources actual values 6-22
PROCESS BUS
overview 3-14
PRODUCT INFORMATION 6-25, B-9
PRODUCT SETUP 5-8, 5-18
PRODUCTION TESTS 2-28
PROTECTION ELEMENTS 5-4
PROTYPE FIRMWARE ERROR MESSAGE 7-14
PRP
actual values 6-9
explained 5-31
settings 5-29
specifications 2-25
PU QUANTITY 5-4
PUSHBUTTONS, USER-PROGRAMMABLE
see USER-PROGRAMMABLE PUSHBUTTONS

R

RADIUS server 5-17, G-1
REACTIVE POWER 2-22, 6-16
REAL POWER 2-22, 6-16
REAL TIME CLOCK
Modbus registers B-31
settings 5-63
REAR TERMINAL ASSIGNMENTS 3-8
RECLOSER CURVES 5-113, 5-149
RECYCLING 10-11
REDUNDANCY
power supply 10-3
PRP actual values 6-9
PRP explained 5-31
settings 5-29
specifications 2-25
RELAY ACTIVATION 4-26
RELAY ARCHITECTURE 5-118
RELAY MAINTENANCE 7-3
RELAY NAME 5-95
RELAY NOT PROGRAMMED 1-20
REMOTE DEVICES
actual values 6-5, 6-22
device ID 5-258
FlexLogic operands 5-129
Modbus registers B-14, B-19
settings 5-256
statistics 6-5
REMOTE DPS INPUTS
actual values 6-4
settings 5-259
REMOTE INPUTS
actual values 6-3
FlexLogic operands 5-128
Modbus registers B-14, B-19
settings 5-258
specifications 2-23
REMOTE OUTPUTS
DNA-1 bit pair 5-259
Modbus registers B-68, B-69
UserSt-1 bit pair 5-260
REMOTE SETTING AUTHORIZATION 4-2
REPAIR 10-9, H-7
REPLACEMENT MODULES 2-13, 2-14
REQUIREMENTS FOR INSTALLATION 1-5
RESET TO FACTORY DEFAULTS 5-8
RESETTING 5-8, 5-129, 5-260
to factory defaults 5-8
REVISION HISTORY H-1
RF IMMUNITY 2-27
RFI, CONDUCTED 2-27

RH/RL POWER SUPPLY 10-3
RMS CURRENT 2-21
RMS VOLTAGE 2-21
RRTD COMM FAIL ERROR 7-14
RS232
  configuration 1-9
  specifications 2-24
  wiring 3-28
RS422
  configuration 3-39
  timing 3-41
  two-channel application 3-40
RS485
  description 3-31
  limitation with CyberSentry 5-16
  specifications 2-24
RTD INPUTS
  actual values 6-21
  Modbus registers B-22, B-36
  settings 5-267
RTD Trouble message 7-17
RxGOOSE OFFLINE ERROR 7-13

S

SAVING SETTING DOES NOT TAKE RELAY OUT OF SERVICE 2-3, 5-8
SBO 5-54
SECURITY
  delete files and records 10-8
SECURITY AUDIT LIST OF PORT NUMBER 5-29
SELECT BEFORE OPERATE 5-54
SELECTOR SWITCH
  actual values 6-6
  application example 5-219
  FlexLogic operands 5-126
  logic 5-220
  Modbus registers B-53
  settings 5-215
  specifications 2-21
  timing 5-218, 5-219
Self-test errors 7-16
SELF-TESTS
  description 7-9
  error messages 7-10, 7-11
  FlexLogic operands 5-129
  Modbus registers B-9
SERIAL NUMBER 6-25
SERIAL PORTS
  settings 5-27
SERVICE LIFE EXPECTED 1-21
SETTING GROUPS 5-126, 5-143, 5-212, B-39
  troubleshooting 5-143
SETTINGS
  change does not take relay out of service 2-3, 5-8
SETTINGS FILE 4-1
  takes relay out of service when loaded 4-2
SETTINGS SAVE ERROR MESSAGE 7-15
SETTINGS TEMPLATES
  description 4-4
  editing 4-4
  enabling 4-4
  Modbus registers B-73
  password protection 4-5
  removing 4-7
  viewing 4-6
SETTINGS, CHANGING 4-25
SFP MODULE FAIL MESSAGE 7-15
SH/SL POWER SUPPLY 10-3
SIGNAL LOSS DETECTION FOR FIBER 5-31
SIGNAL SOURCES
  description 5-5
  metering 6-14
  settings 5-100
SIGNAL TYPES 1-3
SINGLE LINE DIAGRAM 2-1, 2-2
SITE LIST, CREATING 4-1
SNTP PROTOCOL
  accuracy 2-25
  error messages 7-12
  Modbus registers B-31
  settings 5-67
SOFTWARE
  installation 1-5
  see entry for ENERVISTA UR SETUP
SOFTWARE ARCHITECTURE 1-4
SOFTWARE, PC
  see entry for EnerVista UR Setup
SOURCE FREQUENCY 6-17
SOURCE TRANSFER SCHEMES 5-192
SOURCES
  description 5-5
  example use of 5-101
  metering 6-14
  Modbus registers B-16, B-17, B-33
  settings 5-100
SPECIFICATIONS 2-17
STANDARD ABBREVIATIONS H-4
STATUS INDICATORS 4-14, 4-16
STORAGE 10-10
STORAGE MEDIA ALARM 7-14
SUMMATOR
  Modbus registers B-45
SUPPORT, TECHNICAL 1-2
SURGE IMMUNITY 2-27
SYMMETRICAL COMPONENTS METERING 6-12
SYNCHROCHECK
  actual values 6-9, 6-21
SYNCHROPHASORS
  commands 7-8
SYSLOG 5-22
SYSTEM EXCEPTION MESSAGE 7-13
SYSTEM FREQUENCY 5-98
SYSTEM LOGS 5-22
SYSTEM REQUIREMENTS 1-5
SYSTEM SETUP 5-97

T

TARGET MESSAGES 7-9
TARGET SETTING 5-5
TARGETS MENU 7-9
TCP PORT NUMBER 5-55
TDR Trouble message 7-17
TECHNICAL SUPPORT 1-2
TEMPERATURE
  operating 2-26
TEMPERATURE MONITOR 5-129, 7-13
TERMINALS 3-8

TESTING
force contact inputs 5-273
force contact outputs 5-274
lamp test 7-3
self-test error messages 7-9
THD METERING 6-18
analog channel correspondence 5-71
THD metering specifications 2-22
THERMAL OVERLOAD PROTECTION
Modbus registers B-43
settings 5-247
specifications 2-20
TIME 7-2
TIME OF DAY TIMER
actual values 6-6
FlexLogic operands 5-123, 5-124, 5-127
logic 5-227
Modbus registers B-24, B-41
settings 5-226
specifications 2-21
TIME OVERCURRENT
see PHASE, NEUTRAL, and GROUND TOC entries
TIMERS 5-136
TOC
ground 5-174
neutral 5-162
phase 5-149
specifications 2-17
Torque for screws 3-9
TRACEABILITY
data 4-11, 4-12
overview 4-10
rules 4-12
TRACKING FREQUENCY 6-19, B-45
TRANSDUCER I/O
actual values 6-21
settings 5-266, 5-267
specifications 2-23
wiring 3-26
TRIP BUS
FlexLogic operands 5-127
Modbus registers B-47
settings 5-210
TRIP LEDs 5-75
TROUBLE INDICATOR 1-20, 7-9
TROUBLESHOOTING
breaker not working 5-232
setting not working 5-232
TROUBLESHOOTING ACCESS TO DEVICE 1-15

U

UL APPROVAL 2-28
UNABLE TO ACCESS DEVICE 1-15
UNABLE TO PUT RELAY IN FLASH MODE 4-2
UNAUTHORIZED ACCESS
commands 5-25
resetting 7-2
UNDERVOLTAGE
phase 2-19, 5-193
UNDERVOLTAGE CHARACTERISTICS 5-192
UNINSTALL 10-8
Unit not Calibrated message 7-11
UNIT NOT PROGRAMMED 5-95, 7-10
UNPACKING THE RELAY 1-2
UNRETURNED MESSAGES ALARM 5-94
UPDATING ORDER CODE 7-3
URPC
see entry for ENERVISTA UR SETUP
USER-DEFINABLE DISPLAYS
example 5-87
invoking and scrolling 5-85
Modbus registers B-29, B-34
settings 5-85, 5-87
specifications 2-21
USER-PROGRAMMABLE FAULT REPORT
actual values 6-23
clearing 5-25, 7-2
Modbus registers B-19, B-20
settings 5-68
USER-PROGRAMMABLE LEDs
defaults 4-17
description 4-15, 4-16
Modbus registers B-32
settings 5-75
specifications 2-20
USER-PROGRAMMABLE PUSHBUTTONS
FlexLogic operands 5-129
Modbus registers B-35, B-44
settings 5-80
specifications 2-21
USER-PROGRAMMABLE SELF TESTS
Modbus registers B-33
settings 5-76
USERST-1 BIT PAIR 5-260

V

VIBRATION TESTING 2-27
VIRTUAL INPUTS
actual values 6-3
commands 7-2
FlexLogic operands 5-128
logic 5-252
Modbus registers B-9, B-61
settings 5-252
VIRTUAL OUTPUTS
actual values 6-4
FlexLogic operands 5-128
Modbus registers B-63
settings 5-256
VOLTAGE BANKS 5-98
VOLTAGE DEVIATIONS 2-27
VOLTAGE DIFFERENTIAL
actual values 6-20
commands 7-4
FlexLogic operands 5-127
Modbus registers B-22, B-23, B-52
settings 5-198
specifications 2-17
theory of operation 8-3
VOLTAGE ELEMENTS 5-192
FlexElement is phase to ground 5-140
VOLTAGE HARMONICS 6-18
VOLTAGE METERING
specifications 2-21
values 6-15
VOLTAGE MONITOR ERROR 7-14
VOLTAGE RESTRAINT CHARACTERISTIC 5-150

VT FUSE FAILURE
logic 5-246
Modbus registers B-53
settings 5-245
VT INPUTS 3-13, 5-6, 5-98
VT WIRING 3-13
VTFF
FlexLogic operands 5-126
see VT FUSE FAILURE

W

WARNINGS 1-1
WARRANTY H-7
WEB SERVER PROTOCOL 5-55
WEBSITE 1-2
WIRE SIZE
CT/VT 3-12
G.703 interface 3-36
RS422 interface 3-39
WITHDRAWAL FROM OPERATION 10-8
WRONG TRANSCEIVER MESSAGE 7-15

Z

ZERO SEQUENCE CORE BALANCE 3-13

GE VERNOVA

GE Vernova
650 Markland Street
Markham, Ontario
Canada L6C 0M1
Worldwide telephone: +1 905 927 7070
Europe/Middle East/Africa telephone: +34 94 485 88 54
North America toll-free: 1 800 547 8629
Fax: +1 905 927 5098
Worldwide e-mail: GA.support@gevernova.com
Website: https://www.gevernova.com/grid-solutions/multilin/