GE VERNOVA

C70

Capacitor Bank Protection and Control System

Instruction Manual

Product version: 7.9x

Publication reference: 1601-9015-AI3

E83849

INCLUS IND.CONT. EQ. 52TL

Copyright © 2025 GE Vernova. All rights reserved.

GridBeats, Universal Relay, Multilin, MiCOM, S1 Agile, P40 Agile, DS Agile, EnerVista, CyberSentry, HardFiber, FlexLogic, FlexElement, FlexCurve, FlexAnalog, FlexInteger and FlexState are trademarks or registered trademarks of GE Vernova.

The contents of this manual are the property of GE Vernova. This documentation is furnished on license and may not be reproduced in whole or in part without the permission of GE Vernova. The content of this manual is for informational use only and is subject to change without notice.

It is the responsibility of the user for verifying and validating the suitability of all GE Vernova products. This equipment must be used within its design limits. The proper application including configuration and setting of this product to suit the power system assets is the responsibility of the user, who is also required to ensure that all local or regional safety guidelines are adhered to. Incorrect application of this product could risk damage to property/the environment, personal injuries or fatalities and shall be the sole responsibility of the person/entity applying and qualifying the product for use.

The content in this document has been developed to provide guidance to properly install, configure and maintain this product for its intended applications. This guidance is not intended to cover every possible contingency that may arise during commissioning, operation, service, or maintenance activities. Should you encounter any circumstance's not clearly addressed in this document, contact your local GE Vernova service site.

IT IS THE SOLE RESPONSIBILITY OF THE USER TO SECURE THEIR NETWORK AND ASSOCIATED DEVICES AGAINST CYBER SECURITY INTRUSIONS OR ATTACKS. GE VERNOVA AND ITS AFFILIATES ARE NOT LIABLE FOR ANY DAMAGES AND/OR LOSSES ARISING FROM OR RELATED TO SUCH SECURITY INTRUSION OR ATTACKS.

C70 Capacitor Bank Protection and Control System

Table of contents

1 INTRODUCTION
1.1 Safety symbols and definitions 1-1
1.1.1 General cautions and warnings 1-1
1.2 For further assistance 1-2

2 PRODUCT DESCRIPTION
2.1 Product description 2-1
2.2 Security 2-3
2.3 Order codes 2-7
2.3.1 Order codes with enhanced CT/VT modules 2-8
2.3.2 Order codes with process bus modules 2-10
2.3.3 Replacement modules 2-13
2.4 Signal processing 2-15
2.4.1 UR signal processing 2-15
2.5 Specifications 2-17
2.5.1 Protection elements 2-18
2.5.2 User-programmable elements 2-23
2.5.3 Monitoring 2-24
2.5.4 Metering 2-25
2.5.5 Inputs 2-26
2.5.6 Power supply 2-28
2.5.7 Outputs 2-28
2.5.8 Communications 2-30
2.5.9 Inter-relay communications 2-32
2.5.10 CyberSentry security 2-33
2.5.11 Graphical front panel 2-33
2.5.12 Environmental 2-34
2.5.13 Type tests 2-35
2.5.14 Production tests 2-35
2.5.15 Approvals 2-36
2.5.16 Maintenance 2-36

3 INSTALLATION
3.1 Unpack and inspect 3-1
3.2 Panel cutouts 3-2
3.2.1 Horizontal units 3-2
3.2.2 Vertical units 3-6

3.2.3 Rear terminal layout 3-10
3.3 Wiring 3-13
3.3.1 Typical wiring 3-13
3.3.2 Dielectric strength 3-15
3.3.3 Control power 3-15
3.3.4 CT/VT modules 3-16
3.3.5 Process Bus Module for HardFiber 3-18
3.3.6 Contact inputs and outputs 3-19
3.3.7 Transducer inputs and outputs 3-31
3.3.8 RS232 port 3-33
3.3.9 CPU communication ports 3-34
3.3.10 IRIG-B 3-37
3.4 Direct input and output communications 3-37
3.4.1 Description 3-37
3.4.2 Fiber: LED and ELED transmitters 3-40
3.4.3 G.703 interface 3-40
3.4.4 RS422 interface 3-44
3.4.5 IEEE C37.94 interface 3-46
3.5 Activate relay 3-49
3.6 Install software 3-50
3.6.1 EnerVista communication overview 3-50
3.6.2 System requirements 3-51
3.6.3 Install software 3-52
3.7 Add device to software 3-53
3.7.1 Set IP address in UR 3-54
3.7.2 Configure serial connection 3-60
3.7.3 Configure Ethernet connection 3-61
3.7.4 Configure modem connection 3-62
3.7.5 Automatic discovery of UR devices 3-63
3.8 Connect to the C70 3-64
3.8.1 Connect to the C70 in EnerVista 3-64
3.8.2 Use Quick Connect via front RS232 port 3-65
3.8.3 Use Quick Connect via front USB port 3-66
3.8.4 Use Quick Connect via a rear Ethernet port 3-66
3.9 Set up CyberSentry and change default password 3-67
3.10 Import settings 3-68
3.11 Connect to D400 gateway 3-69
3.11.1 Oscillography files 3-69
3.11.2 Event records 3-69
3.11.3 Log files 3-69
3.11.4 Setting files 3-70

4 INTERFACES
4.1 EnerVista software interface 4-1
4.1.1 Introduction 4-1
4.1.2 Settings files 4-1
4.1.3 Event viewing 4-2
4.1.4 File support 4-3
4.1.5 EnerVista main window 4-3
4.1.6 Protection summary window 4-5
4.1.7 Settings templates 4-6
4.1.8 Secure and lock FlexLogic equations 4-10
4.1.9 Settings file traceability 4-13
4.2 Front panel interface 4-16
4.2.1 Front panel 4-16
4.2.2 Front panel display 4-18

4.2.3 Front panel navigation keys 4-38
4.2.4 LED indicators 4-39
4.2.5 Front panel labelling 4-43
4.2.6 Menu navigation 4-50
4.2.7 Change settings 4-52
4.2.8 View actual values 4-57
4.2.9 Breaker control 4-58
4.2.10 Change passwords 4-59
4.2.11 Invalid password entry 4-61
4.3 Logic diagrams 4-61
4.4 FlexLogic design using Engineer 4-62
4.4.1 Design logic 4-64
4.4.2 Send file to and from device 4-74
4.4.3 Monitor logic 4-75
4.4.4 View front panel and print labels 4-76
4.4.5 Generate connectivity report 4-76
4.4.6 Preferences 4-77
4.4.7 Toolbars 4-80

5 SETTINGS
5.1 Settings menu 5-1
5.2 Overview 5-4
5.2.1 Introduction to elements 5-4
5.2.2 Introduction to AC sources 5-6
5.3 Product setup 5-7
5.3.1 Security 5-7
5.3.2 Display properties 5-26
5.3.3 Graphical front panel 5-28
5.3.4 Clear relay records 5-41
5.3.5 Communications 5-41
5.3.6 Modbus user map 5-111
5.3.7 Real-time clock 5-112
5.3.8 User-programmable fault report 5-117
5.3.9 Oscillography 5-118
5.3.10 Data logger 5-120
5.3.11 User-programmable LEDs 5-122
5.3.12 User-programmable self tests 5-126
5.3.13 Control pushbuttons 5-127
5.3.14 User-programmable pushbuttons 5-129
5.3.15 Flex state parameters 5-135
5.3.16 User-definable displays 5-136
5.3.17 Direct inputs and outputs 5-138
5.3.18 Teleprotection 5-144
5.3.19 Installation 5-145
5.4 Remote resources 5-146
5.4.1 Remote resources configuration 5-146
5.5 System setup 5-147
5.5.1 AC inputs 5-147
5.5.2 Power system 5-148
5.5.3 Signal sources 5-149
5.5.4 Breakers 5-154
5.5.5 Disconnect switch control 5-159
5.5.6 FlexCurves 5-165
5.6 Process Bus Module 5-172
5.6.1 Parallel Redundancy Protocol (PRP) 5-172
5.6.2 High-availability seamless redundancy (HSR) 5-174

5.6.3 General 5-175
5.6.4 PBM PTP 5-177
5.6.5 SV Stream Config 5-180
5.7 FlexLogic 5-194
5.7.1 FlexLogic operands 5-194
5.7.2 FlexLogic rules 5-209
5.7.3 FlexLogic evaluation 5-209
5.7.4 FlexLogic example 5-210
5.7.5 FlexLogic equation editor 5-215
5.7.6 FlexLogic timers 5-215
5.7.7 FlexElements 5-215
5.7.8 Non-volatile latches 5-219
5.8 Grouped elements 5-220
5.8.1 Overview 5-220
5.8.2 Setting group 1 5-220
5.8.3 Phase current 5-221
5.8.4 Neutral current 5-236
5.8.5 Ground current 5-248
5.8.6 Negative sequence current 5-251
5.8.7 Breaker failure (ANSI 50BF) 5-257
5.8.8 Voltage elements 5-266
5.9 Control elements 5-283
5.9.1 Overview 5-283
5.9.2 Trip bus 5-283
5.9.3 Setting groups 5-285
5.9.4 Selector switch 5-287
5.9.5 Capacitor control 5-294
5.9.6 Time of day timers 5-299
5.9.7 Automatic voltage regulator 5-300
5.9.8 Digital elements 5-304
5.9.9 Digital counters 5-307
5.9.10 Monitoring elements 5-309
5.10 Inputs/outputs 5-325
5.10.1 Contact inputs 5-325
5.10.2 Virtual inputs 5-327
5.10.3 Contact outputs 5-328
5.10.4 Virtual outputs 5-331
5.10.5 Resetting 5-332
5.10.6 Direct inputs and outputs 5-333
5.10.7 Teleprotection 5-336
5.11 Transducer inputs/outputs 5-338
5.11.1 DCmA inputs 5-338
5.11.2 RTD inputs 5-339
5.11.3 DCmA outputs 5-340
5.12 Testing 5-344
5.12.1 IED mode config 5-344
5.12.2 Force contact inputs 5-347
5.12.3 Force contact outputs 5-348
5.13 Simulation 5-348
5.13.1 Subscribe to simulated values 5-349
5.13.2 Publish simulated values 5-350

6 ACTUAL VALUES
6.1 Actual values menu 6-1
6.2 Front panel 6-3
6.2.1 Enhanced and basic front panels 6-3

6.2.2 Graphical front panel ... 6-4
6.3 Status ... 6-5
6.3.1 IED ... 6-5
6.3.2 Contact inputs ... 6-5
6.3.3 Virtual inputs ... 6-5
6.3.4 RxGOOSE boolean inputs ... 6-5
6.3.5 RxGOOSE DPS inputs ... 6-6
6.3.6 Teleprotection inputs ... 6-6
6.3.7 Contact outputs ... 6-6
6.3.8 Virtual outputs ... 6-7
6.3.9 RxGOOSE status ... 6-7
6.3.10 RxGOOSE statistics ... 6-7
6.3.11 Digital counters ... 6-8
6.3.12 Selector switches ... 6-8
6.3.13 Flex States ... 6-8
6.3.14 Time of day timers ... 6-8
6.3.15 Ethernet ... 6-9
6.3.16 Real time clock synchronizing ... 6-9
6.3.17 Direct inputs ... 6-10
6.3.18 Direct devices status ... 6-10
6.3.19 Teleprotection channel tests ... 6-11
6.3.20 Remaining connection status ... 6-11
6.3.21 Parallel Redundancy Protocol (PRP) ... 6-12
6.3.22 TxGOOSE status ... 6-12
6.3.23 Protocol ... 6-13
6.4 Metering ... 6-13
6.4.1 Metering conventions ... 6-13
6.4.2 Sources ... 6-17
6.4.3 Tracking frequency ... 6-21
6.4.4 FlexElements ... 6-22
6.4.5 Capacitor control ... 6-22
6.4.6 Capacitor bank ... 6-22
6.4.7 RxGOOSE analogs ... 6-24
6.4.8 Transducer inputs/outputs ... 6-24
6.5 Remote resources ... 6-24
6.5.1 Field unit ... 6-24
6.6 Process Bus Module ... 6-25
6.6.1 General status ... 6-25
6.6.2 RxSV status ... 6-25
6.6.3 Clock synchronizing ... 6-26
6.6.4 PRP ... 6-27
6.6.5 HSR ... 6-28
6.7 Records ... 6-28
6.7.1 User programmable fault reports ... 6-28
6.7.2 Event records ... 6-28
6.7.3 Oscillography ... 6-30
6.7.4 Data logger ... 6-31
6.7.5 Breaker maintenance ... 6-31
6.8 Product information ... 6-32
6.8.1 Model information ... 6-32
6.8.2 Firmware revisions ... 6-32

7 COMMANDS AND TARGETS
7.1 Commands menu ... 7-1
7.1.1 Virtual inputs ... 7-2
7.1.2 Clear records ... 7-2

7.1.3 Set date and time 7-3
7.1.4 Relay maintenance 7-3
7.1.5 Capacitor bank automatic setting 7-5
7.1.6 Security 7-9
7.2 Targets menu 7-9
7.2.1 Target messages 7-10
7.2.2 Relay self-tests 7-10

8 APPLICATION OF SETTINGS
8.1 Arrangement of shunt capacitor banks 8-1
8.1.1 Overview 8-1
8.1.2 Externally fused capacitors 8-1
8.1.3 Internally fused capacitors 8-2
8.1.4 Fuseless capacitors 8-2
8.1.5 Unfused capacitors 8-3
8.2 Connections of shunt capacitor banks 8-3
8.2.1 Grounded wye-connected banks 8-3
8.2.2 Ungrounded wye-connected banks 8-3
8.2.3 Delta connected banks 8-4
8.2.4 H-configuration 8-4
8.2.5 Tapped configuration 8-4
8.2.6 Summary 8-4
8.3 Protection methods for capacitor banks 8-5
8.3.1 Overview 8-5
8.3.2 Capacitor unbalance protection 8-5
8.3.3 Protection for rack faults (arc-over within capacitor banks) 8-10
8.3.4 Overvoltage 8-10
8.3.5 Overcurrent 8-11
8.3.6 Loss of bus voltage 8-11
8.4 Settings example 8-11
8.4.1 Overview 8-11
8.4.2 VT and CT setup 8-12
8.4.3 Source assignment 8-14
8.4.4 Bank unbalance calculations 8-14
8.4.5 Bank voltage differential settings 8-17
8.4.6 Bank phase current unbalance settings 8-19
8.4.7 Bank phase overvoltage settings 8-20
8.4.8 Bank phase undervoltage settings 8-21
8.4.9 Bank overcurrent protection 8-22

9 THEORY OF OPERATION
9.1 Overview 9-1
9.1.1 General operation 9-1
9.1.2 Bank phase overvoltage (ANSI 59B) 9-1
9.1.3 Voltage differential (ANSI 87V) 9-3
9.1.4 Compensated bank neutral voltage unbalance (ANSI 59NU) 9-7
9.1.5 Phase current unbalance (ANSI 60P) 9-11
9.1.6 Neutral current unbalance (ANSI 60N) 9-14

10 MAINTENANCE
10.1 Monitoring 10-1
10.1.1 Devices with Site Targets 10-1
10.1.2 Data with Modbus Analyzer 10-1
10.2 General maintenance 10-3
10.2.1 In-service maintenance 10-3
10.2.2 Out-of-service maintenance 10-3

10.2.3 Unscheduled maintenance (system interruption) 10-3
10.3 Retrieve files 10-3
10.3.1 CyberSentry security event files 10-4
10.4 Convert device settings 10-5
10.5 Copy settings to other device 10-7
10.6 Compare settings 10-7
10.6.1 Compare against defaults 10-7
10.6.2 Compare two devices 10-8
10.7 Back up and restore settings 10-8
10.7.1 Back up settings 10-8
10.7.2 Restore settings 10-11
10.8 Upgrade software 10-13
10.9 Upgrade firmware 10-14
10.10 Replace front panel 10-15
10.11 Replace module 10-23
10.12 Battery 10-25
10.12.1 Replace battery 10-25
10.12.2 Dispose of battery 10-26
10.13 Clear files and data after uninstall 10-29
10.14 Repairs 10-30
10.15 Storage 10-30
10.16 Disposal 10-31

A FLEXANALOG OPERANDS
A.1 FlexAnalog items A-1

B RADIUS SERVER CONFIGURATION
B.1 RADIUS server configuration B-1

C COMMAND LINE INTERFACE
C.1 Command line interface C-1

D MISCELLANEOUS
D.1 Warranty D-1
D.2 Revision history D-1
D.3 Open source licenses D-3

ABBREVIATIONS

INDEX

C70 Capacitor Bank Protection and Control System

Chapter 1: Introduction

This chapter outlines safety and technical support information.

1.1 Safety symbols and definitions

Before attempting to install or use the device, review all safety indicators in this document to help prevent injury, equipment damage, or downtime.

The following safety and equipment symbols are used in this document.

DANGER **Indicates a hazardous situation which, if not avoided, will result in death or serious injury.**

WARNING **Indicates a hazardous situation which, if not avoided, could result in death or serious injury.**

CAUTION **Indicates a hazardous situation which, if not avoided, could result in minor or moderate injury.**

NOTICE Indicates practices not related to personal injury.

1.1.1 General cautions and warnings

The following general safety precautions and warnings apply.

DANGER **Ensure that all connections to the product are correct so as to avoid accidental risk of shock and/or fire, for example such as can arise from high voltage connected to low voltage terminals.**

Follow the requirements of this manual, including adequate wiring size and type, terminal torque settings, voltage, current magnitudes applied, and adequate isolation/clearance in external wiring from high to low voltage circuits.

Use the device only for its intended purpose and application.

Ensure that all ground paths are uncompromised for safety purposes during device operation and service.

Ensure that the control power applied to the device, the alternating current (AC), and voltage input match the ratings specified on the relay nameplate. Do not apply current or voltage in excess of the specified limits.

Only qualified personnel are to operate the device. Such personnel must be thoroughly familiar with all safety cautions and warnings in this manual and with applicable country, regional, utility, and plant safety regulations.

Hazardous voltages can exist in the power supply and at the device connection to current transformers, voltage transformers, control, and test circuit terminals. Make sure all sources of such voltages are isolated prior to attempting work on the device.

Hazardous voltages can exist when opening the secondary circuits of live current transformers. Make sure that current transformer secondary circuits are shorted out before making or removing any connection to the current transformer (CT) input terminals of the device.

For tests with secondary test equipment, ensure that no other sources of voltages or currents are connected to such equipment and that trip and close commands to the circuit breakers or other switching apparatus are isolated, unless this is required by the test procedure and is specified by appropriate utility/plant procedure.

When the device is used to control primary equipment, such as circuit breakers, isolators, and other switching apparatus, all control circuits from the device to the primary equipment must be isolated while personnel are working on or around this primary equipment to prevent any inadvertent command from this device.

Use an external disconnect to isolate the mains voltage supply.

Personal safety can be affected if the product is physically modified by the end user. Modifications to the product outside of recommended wiring configuration, hardware, or programming boundaries is not recommended end-use practice. Product disassembly and repairs are not permitted. All service needs to be conducted by the factory.

⚠CAUTION **LED transmitters are classified as IEC 60825-1 Accessible Emission Limit (AEL) Class 1M. Class 1M devices are considered safe to the unaided eye. Do not view directly with optical instruments.**

NOTICE This product is rated to Class A emissions levels and is to be used in Utility, Substation Industrial environments. Not to be used near electronic devices rated for Class B levels.

1.2 For further assistance

For product support, contact the information and call center as follows:

GE Grid Solutions
650 Markland Street
Markham, Ontario
Canada L6C 0M1
Worldwide telephone: +1 905 927 7070
Europe/Middle East/Africa telephone: +34 94 485 88 54
North America toll-free: 1 800 547 8629
Fax: +1 905 927 5098
Worldwide e-mail: multilin.tech@ge.com
Europe e-mail: multilin.tech.euro@ge.com
Website: http://www.gegridsolutions.com/multilin

When contacting GE by e-mail, optionally include a device information file, which is generated in the EnerVista software by clicking the **Service Report** button. The service report also can be generated in the field, for example with a USB cable connected between the graphical front panel and a computer, and the Device Setup configured for the USB connection.

Figure 1-1: Generate service report in EnerVista software

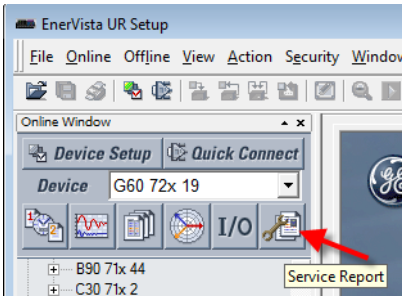

C70 Capacitor Bank Protection and Control System

Chapter 2: Product description

This chapter outlines the product, order codes, and specifications.

2.1 Product description

The C70 Capacitor Bank Protection and Control System is part of the Universal Relay (UR) family of products. It is a microprocessor-based relay for protection and control of small, medium, and large three-phase capacitor banks. The relay can be ordered with up to three current transformer/voltage transformer (CT/VT) modules, allowing for flexible application in a variety of bank configurations.

The key protection functions cover grounded and ungrounded, single and parallel banks. Sensitive protection functions support compensation for both external (system) unbalance and inherent unbalance of the capacitor bank itself. Both voltage and current-based balance protection functions are available. Algorithms are developed to select automatically compensation settings after repairs or other alternations of the bank.

The relay supports a variety of bank configurations through flexible configurations of its AC inputs, installed voltage and current transformers, and resulting protection techniques.

The relay incorporates an automatic voltage regulator (AVR) responding to voltage, reactive power, or power factor. A separate timer function initiates controls on a pre-defined time/date basis. These on-off type controls are meant to close automatically or open the associated breaker. A supervisory function is provided to program the local/remote, auto/manual functionality, temporary inhibit closing after tripping, and other auxiliary functions, such as operation counters.

A capacitor control element provides remote/local and auto/manual control regulation, trip/close interlocking, and seal-in. A user-programmable time delay inhibits closing until after the bank discharges itself to a safe level.

The relay also can be equipped with a serial 64/128 kbps direct input/output module for fast and reliable peer-to-peer communication with other UR-series devices.

The C70 metering functions include true root mean square (RMS) and phasors for currents and voltages, current and voltage harmonics and total harmonic distortion (THD), symmetrical components, frequency, power, and power factor.

Diagnostic features include an event recorder capable of storing 1024 time-tagged events, oscillography capable of storing up to 64 records with programmable trigger, content and sampling rate, and data logger acquisition of up to 16 channels, with programmable content and sampling rate. The internal clock used for time-tagging can be synchronized with an IRIG-B signal, using the Simple Network Time Protocol (SNTP) over the Ethernet port, or using the Precision Time Protocol (PTP). This precise time stamping allows the sequence of events to be determined throughout the system. Events also can be programmed (via FlexLogic™ equations) to trigger oscillography data capture that can be set to record the measured parameters before and after the event for viewing on a computer. These tools reduce troubleshooting time and simplify report generation in the event of a system fault.

Several options are available for communication. An RS232 port (USB port with the graphical front panel) can be used to connect to a computer to program settings and monitor actual values. The rear RS485 port allows independent access by operating and engineering staff. It can be connected to system computers with baud rates up to 115.2 kbps. All serial ports use the Modbus RTU protocol. The IEC 60870-5-103 protocol is supported on the RS485 interface. Also only one of the DNP, IEC 60870-5-103, and IEC 60870-5-104 protocols can be enabled at any time on the relay. When the IEC 60870-5-103 protocol is chosen, the RS485 port has a fixed even parity and the baud rate can be either 9.6 kbps or 19.2 kbps. The 100Base-FX or 100Base-TX Ethernet interface provides fast, reliable communications in noisy environments. The Ethernet port supports IEC 61850, Modbus/TCP, TFTP, and PTP (according to IEEE Std. 1588-2008 or IEC 61588), and it allows access to the relay via any standard web browser (C70 web pages). The IEC 60870-5-104 protocol is supported on the Ethernet port. The Ethernet port also supports the Parallel Redundancy Protocol (PRP) of IEC 62439-3 (clause 4, 2012) when purchased as an option.

GOOSE and secure Routable GOOSE (R-GOOSE) are supported with software options. Process Bus GOOSE is supported with a hardware module and software options.Settings and actual values can be accessed from the front panel or EnerVista software.

With a Process Bus Module that supports IEC 61850-9-2LE and IEC 61869, PRP is supported on two Ethernet ports to IEC 62439, and High-availability Seamless Redundancy (HSR) is supported on four Ethernet ports for dual HSR ring architecture.

The C70 uses flash memory technology that allows field upgrading as new features are added. Firmware and software are upgradable.

The following single-line diagram illustrates the relay functionality using American National Standards Institute (ANSI) device numbers.

Table 2-1: ANSI device numbers and functions supported

Device number	Function
27P	Phase undervoltage
50BF	Breaker failure
50DD	Disturbance detector
50G	Ground instantaneous overcurrent
50N	Neutral instantaneous overcurrent
50P	Phase instantaneous overcurrent
50_2	Negative-sequence instantaneous overcurrent
51G	Ground time overcurrent
51N	Neutral time overcurrent
51P	Phase time overcurrent
51_2	Negative-sequence time overcurrent
59B	Bank phase overvoltage

Device number	Function
59N	Neutral overvoltage
59NU	Neutral voltage unbalance
59P	Phase overvoltage
59X	Auxiliary overvoltage
59_2	Negative-sequence overvoltage
60N	Bank neutral current unbalance
60P	Bank phase current unbalance
67N	Neutral directional overcurrent
67P	Phase directional overcurrent
67_2	Negative-sequence directional overcurrent
87V	Bank voltage differential

Figure 2-1: Single-line diagram

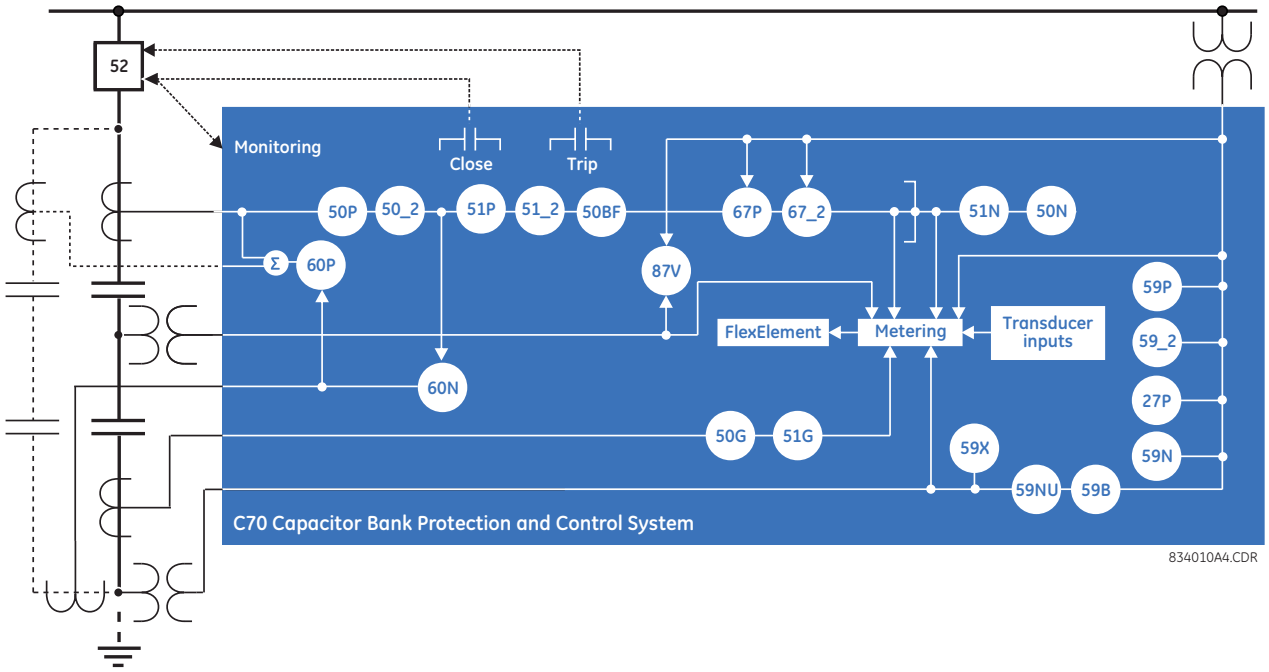

Table 2-2: Other device functions

Function	Function	Function
Breaker arcing current (I^2t)	Direct inputs and outputs (32)	Time and date
Breaker control	Event recorder	Time synchronization over IRIG-B or IEEE 1588
Breaker flashover	FlexElements™ (16)	Time synchronization over SNTP
Breaker restrike	FlexLogic equations	Transducer inputs and outputs
Capacitor control supervision	Frequency metering	User-definable displays
Contact inputs (up to 120)	IEC 60870-5-103 communications	User-programmable fault reports
Contact outputs (up to 72)	IEC 61850 communications	User-programmable LEDs
Control pushbuttons	IEC 62351-9 data and communications security	User-programmable pushbuttons
CyberSentry™ security	Modbus communications	User-programmable self-tests
Current metering: true RMS, phasors, symmetrical	Modbus user map	Virtual inputs (128)
	Non-volatile latches	Virtual outputs (128)
Data logger	Non-volatile selector switch	Voltage metering: true RMS, phasors, symmetrical
Digital counters (8)	Oscillography	
Digital elements (96)	Power metering	Voltage regulator
Disconnect switches	Power factor metering	VT fuse failure
DNP 3.0 or IEC 60870-5-104 protocol	Setting groups (6)	

2.2 Security

The following security features are available:

- Password security — Basic security present by default

- EnerVista security — Role-based access to various EnerVista software screens and configuration elements. The feature is present by default in the EnerVista software.
- CyberSentry security — Advanced security available using a software option. When purchased, the option is enabled automatically, and the default Password security and EnerVista security are disabled.

2.2.0.1 EnerVista security

The EnerVista security management system is a role-based access control (RBAC) system that allows an administrator to manage the privileges of multiple users. This allows for access control of UR devices by multiple personnel within a substation and conforms to the principles of RBAC as defined in ANSI INCITS 359-2004. The EnerVista security management system is disabled by default to allow the administrator direct access to the EnerVista software after installation. It is recommended that security be enabled before placing the device in service.

Basic password or enhanced CyberSentry security applies, depending on purchase.

2.2.0.2 Password security

Password security is a basic security feature present by default.

Two levels of password security are provided: command and setting. Use of a password for each level controls whether all users can enter commands and/or change settings.

Two types of connection security are provided: password entry from local or remote connection. Local access is defined as access to settings or commands via the front panel interface. This includes both keypad entry and the through a front panel port. Remote access is defined as access to settings or commands via any rear communications port. This includes both Ethernet and RS485 connections. These two settings are on by default and apply to all users.

When entering a settings or command password via EnerVista or any serial interface, the user must enter the corresponding connection password. If the connection is to the back of the C70, the remote password is used. If the connection is to a front panel port, the local password applies. (These two local and remote password settings are not shown the figure.)

Password access events are logged in the Event Recorder.

Figure 2-2: Access control by passwords and connection type

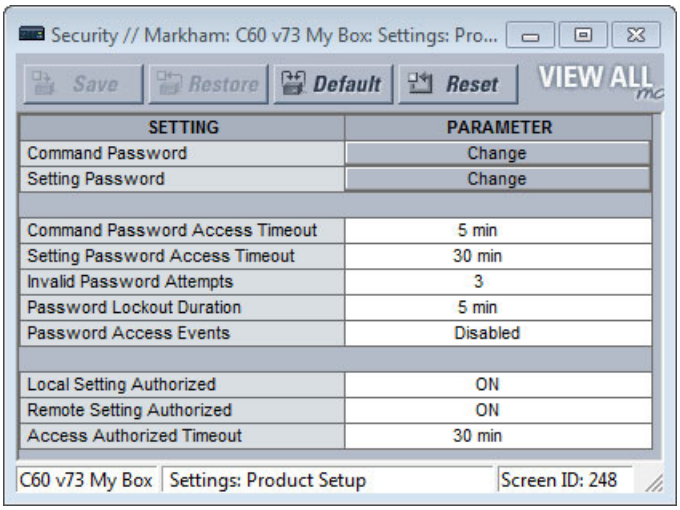

2.2.0.3 CyberSentry security

CyberSentry security is available using software options that provide advanced security. When the option is purchased, the basic password security is disabled automatically.

CyberSentry provides security through the following features:

- An Authentication, Authorization, Accounting (AAA) Remote Authentication Dial-In User Service (RADIUS) client that is managed centrally, enables user attribution, provides accounting of all user activities, and uses secure standards-

based strong cryptography for authentication and credential protection. In other words, this option uses a RADIUS server for user authentication.

- A Role-Based Access Control (RBAC) system that provides a permission model that allows access to UR device operations and configurations based on specific roles and individual user accounts configured on the AAA server. That is, Administrator, Supervisor, Engineer, Operator, and Observer roles are used.
- Security event reporting through the Syslog protocol for supporting Security Information Event Management (SIEM) systems for centralized cybersecurity monitoring
- Strong encryption of all access and configuration network messages between the EnerVista software and UR devices using the Secure Shell (SSH) protocol, the Advanced Encryption Standard (AES), and 128-bit keys in Galois Counter Mode (GCM) as specified in the U.S. National Security Agency Suite B extension for SSH and approved by the National Institute of Standards and Technology (NIST) FIPS-140-2 standards for cryptographic systems

CyberSentry user roles

CyberSentry user roles (Administrator, Supervisor, Engineer, Operator, Observer) limit the levels of access to various UR functions. This means that the EnerVista software allows for access to functionality based on the user's logged in role.

Example: Administrative functions can be segmented from common operator functions, or engineering type access, all of which are defined by separate roles so that access of UR devices by multiple personnel within a substation is allowed.

One role of one type is allowed to be logged in at a time. For example, one Operator can be logged in but not a second Operator at the same time. This prevents subsets of settings from being changed at the same time.

Figure 2-3: CyberSentry user roles

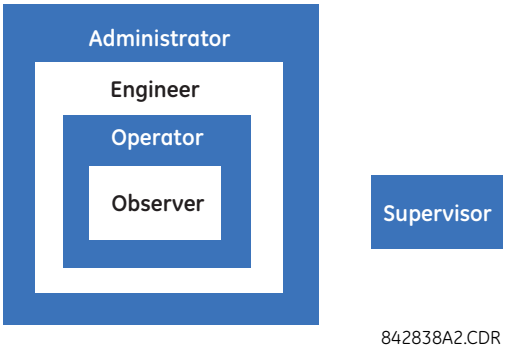

The table lists user roles and permissions.

Table 2-3: Permissions by user role with CyberSentry

	Administrator	Engineer	Operator	Supervisor	Observer
Summary	Complete access	Complete access except for CyberSentry Security	Command menu	Authorizes writing	Default role
Device Definition	R	R	R	R	R
Settings					
|--------- Product Setup					
|---------- Security (CyberSentry)	RW	R	R	R	R
|---------- Supervisory	See table notes	R	R	See table notes	R
|---------- Display Properties	RW	RW	R	R	R
|---------- Clear Relay Records (settings)	RW	RW	R	R	R
|---------- Communications	RW	RW	R	R	R

2

	Administrator	Engineer	Operator	Supervisor	Observer
|---------- Modbus User Map	RW	RW	R	R	R
|---------- Real Time Clock	RW	RW	R	R	R
|---------- Oscillography	RW	RW	R	R	R
|---------- Data Logger	RW	RW	R	R	R
|---------- Demand	RW	RW	R	R	R
|---------- User-Programmable LEDs	RW	RW	R	R	R
|---------- User-Programmable Self Tests	RW	RW	R	R	R
|---------- Control Pushbuttons	RW	RW	R	R	R
|---------- User-Programmable Pushbuttons	RW	RW	R	R	R
|---------- Flex state Parameters	RW	RW	R	R	R
|---------- User-Definable Displays	RW	RW	R	R	R
|---------- Direct I/O	RW	RW	R	R	R
|---------- Teleprotection	RW	RW	R	R	R
|---------- Installation	RW	RW	R	R	R
|---------- System Setup	RW	RW	R	R	R
|---------- FlexLogic	RW	RW	R	R	R
|---------- Grouped Elements	RW	RW	R	R	R
|---------- Control Elements	RW	RW	R	R	R
|---------- Inputs / Outputs	RW	RW	R	R	R
|---------- Contact Inputs	RW	RW	R	R	R
|---------- Contact Input threshold	RW	RW	R	R	R
|---------- Virtual Inputs	RW	RW	R	R	R
|---------- Contact Outputs	RW	RW	R	R	R
|---------- Virtual Outputs	RW	RW	R	R	R
|---------- Resetting	RW	RW	R	R	R
|---------- Direct Inputs	RW	RW	R	R	R
|---------- Direct Outputs	RW	RW	R	R	R
|---------- Teleprotection	RW	RW	R	R	R
|---------- Direct Analogs	RW	RW	R	R	R
|---------- Direct Integers	RW	RW	R	R	R
|---------- Transducer I/O	RW	RW	R	R	R
|---------- Testing	RW	RW	R	R	R
|---------- Front Panel Label Designer	NA	NA	NA	NA	NA
|---------- Protection Summary	NA	NA	NA	NA	NA
Commands	RW	RW	RW	R	R
|---------- Virtual Inputs	RW	RW	RW	R	R
|---------- Clear Records	RW	RW	RW	R	R
|---------- Set Date and Time	RW	RW	RW	R	R
User Displays	R	R	R	R	R
Targets	R	R	R	R	R
Actual Values	R	R	R	R	R
|---------- Front Panel	R	R	R	R	R
|---------- Status	R	R	R	R	R

	Administrator	Engineer	Operator	Supervisor	Observer
|---------- Metering	R	R	R	R	R
|---------- Transducer I/O	R	R	R	R	R
|---------- Records	R	R	R	R	R
|---------- Product Info	R	R	R	R	R
Maintenance	RW	RW	R	R	R
|---------- Modbus Analyzer	NA	NA	NA	NA	NA
|---------- Change front panel	RW	RW	RW	R	R
|---------- Update firmware	Yes	No	No	No	No
|---------- Retrieve file	Yes	No	No	No	No

Table Notes:

RW = read and write access

R = read access

Supervisor = RW (default), Administrator = R (default), Administrator = RW (only if Supervisor role is disabled)

NA = the permission is not enforced by CyberSentry security

CyberSentry user authentication

The following types of authentication are supported by CyberSentry to access the UR device:

- Device Authentication (local UR device authenticates)
- Server Authentication (RADIUS server authenticates)

The EnerVista software allows access to functionality that is determined by the user role, which comes either from the local UR device or the RADIUS server.

The EnerVista software has a device authentication option on the login screen for accessing the UR device. When the "Device" button is selected, the UR uses its local authentication database and not the RADIUS server to authenticate the user. In this case, it uses its built-in roles (Administrator, Engineer, Supervisor, Observer, Operator, or Administrator and Supervisor when Device Authentication is disabled) as login names and the associated passwords are stored on the UR device. As such, when using the local accounts, access is not user-attributable.

In cases where user-attributable access is required especially to facilitate auditable processes for compliance reasons, use RADIUS authentication.

When the "Server" Authentication Type option is selected, the UR uses the RADIUS server and not its local authentication database to authenticate the user.

No password or security information is displayed in plain text by the EnerVista software or UR device, nor is such information ever transmitted without cryptographic protection.

CyberSentry server authentication

The UR has been designed to direct automatically the authentication requests based on user names. In this respect, local account names on the UR are considered as reserved and not used on a RADIUS server.

The UR detects automatically whether an authentication request is to be handled remotely or locally. As there are five local accounts possible on the UR, if the user ID credential does not match one of the five local accounts, the UR forwards automatically the request to a RADIUS server when one is provided.

If a RADIUS server is provided, but is unreachable over the network, server authentication requests are denied. In this situation, use local UR accounts to gain access to the UR system.

2.3 Order codes

The order code is on the product label and indicates the product options applicable.

The C70 is available as a 19-inch rack horizontal mount or reduced-size (¾) vertical unit and consists of the following modules: power supply, CPU, CT/VT, contact input and output, transducer input and output, and inter-relay communications. Module options are specified at the time of ordering.

Order codes are subject to change without notice. See the web page for the product for the latest options.

The letters in the top row of the tables correspond to slots in the UR chassis, for example slot F, H, or U.

2

NOTE

The R-GOOSE protocol described in IEC 61850-8-1 is available through the IEC 61850 software option. R-GOOSE security requires the CyberSentry software option.

Process Bus GOOSE requires an IEC 61850-9-2LE / IEC 61869 Process Bus Module, as well as IEC 61850, PRP, and IEEE 1588 software options.

For Japanese, the settings display in Japanese on the graphical front panel, while the keys printed on the panel are in English.

2.3.1 Order codes with enhanced CT/VT modules

Table 2-4: C70 order codes for horizontal units

	C70 - * ** - * * * - F ** - H ** - M ** - P ** - U ** - W/X **	Full Size Horizontal Mount
BASE UNIT	C70 |	Base Unit
CPU	T |	RS485 with 3 100Base-FX Ethernet, multimode, SFP with LC
	U |	RS485 with 1 100Base-TX Ethernet, SFP RJ-45 + 2 100Base-FX Ethernet, multimode, SFP with LC
	V |	RS485 with 3 100Base-TX Ethernet, SFP with RJ-45
	W |	RS485 with 2 100Base-FX Ethernet, multimode ST + 10/100Base-TX Ethernet, RJ-45
SOFTWARE OPTIONS	00 |	No software options
	03 |	IEC 61850
	12 |	Enhanced capacitor bank control (time and date, capacitor control supervision, automatic voltage regulator)
	13 |	Enhanced capacitor bank control and IEC 61850
	A0 |	CyberSentry Lvl 1
	A3 |	CyberSentry Lvl 1 and IEC 61850
	AC |	CyberSentry Lvl 1 and enhanced capacitor bank control
	AD |	CyberSentry Lvl 1, IEC 61850, and enhanced capacitor bank control
	B0 |	IEEE 1588
	B3 |	IEEE 1588 and IEC 61850
	BC |	IEEE 1588 and enhanced capacitor bank control
	BD |	IEEE 1588, IEC 61850, and enhanced capacitor bank control
	C0 |	Parallel Redundancy Protocol (PRP)
	C3 |	PRP and IEC 61850
	CC |	PRP and Enhanced Capacitor Bank Control
	CD |	PRP, IEC 61850, and Enhanced Capacitor Bank Control
	D0 |	IEEE 1588 and CyberSentry Lvl 1
	D3 |	IEEE 1588, CyberSentry Lvl 1, and IEC 61850
	DC |	IEEE 1588, CyberSentry Lvl 1, and enhanced capacitor bank control
	DD |	IEEE 1588, CyberSentry Lvl 1, IEC 61850, and enhanced capacitor bank control
	E0 |	IEEE 1588 and PRP
	E3 |	IEEE 1588, PRP, and IEC 61850
	EC |	IEEE 1588, PRP, enhanced capacitor bank control
	ED |	IEEE 1588, PRP, IEC 61850, and enhanced capacitor bank control
	F0 |	PRP and CyberSentry Lvl 1
	F3 |	PRP, CyberSentry Lvl 1, and IEC 61850
	FC |	PRP, CyberSentry Lvl 1, and enhanced capacitor bank control
	FD |	PRP, CyberSentry Lvl 1, IEC 61850, and enhanced capacitor bank control
	G0 |	IEEE 1588, PRP, and CyberSentry Lvl 1
	G3 |	IEEE 1588, PRP, CyberSentry Lvl 1, and IEC 61850
	GC |	IEEE 1588, PRP, CyberSentry Lvl 1, and enhanced capacitor bank control
	GD |	IEEE 1588, PRP, CyberSentry Lvl 1, IEC 61850, and enhanced capacitor bank control
	J0 |	IEC 60870-5-103
	J3 |	IEC 60870-5-103 and IEC 61850
	JC |	IEC 60870-5-103 and enhanced capacitor bank control
	JD |	IEC 60870-5-103, IEC 61850, and enhanced capacitor bank control
	K0 |	IEEE 1588, PRP, and IEC 60870-5-103
	K3 |	IEEE 1588, PRP, IEC 60870-5-103, and IEC 61850
	KC |	IEEE 1588, PRP, IEC 60870-5-103, and enhanced capacitor bank control
	KD |	IEEE 1588, PRP, IEC 60870-5-103, IEC 61850, and enhanced capacitor bank control
	L0 |	IEC 60870-5-103, IEEE 1588, PRP, and CyberSentry Lvl 1
	L3 |	IEC 60870-5-103, IEEE 1588, PRP, CyberSentry Lvl 1, and IEC 61850
	LC |	IEC 60870-5-103, IEEE 1588, PRP, CyberSentry Lvl 1, and enhanced capacitor bank control
	LD |	IEC 60870-5-103, IEEE 1588, PRP, CyberSentry Lvl 1, IEC 61850, and enhanced capacitor bank control
MOUNT/COATING	H |	Horizontal (19" rack)
	A |	Horizontal (19" rack) with harsh-environment coating
FRONT PANEL + INTERFACE	C |	English display
	P |	English display with 4 small and 12 large programmable pushbuttons
	D |	French display
	R |	Russian display

C70 - * ** - * * * - F ** - H ** - M ** - P ** - U ** - W/X **								Full Size Horizontal Mount
	K							Enhanced front panel with English display
	M							Enhanced front panel with French display
	Q							Enhanced front panel with Russian display
	U							Enhanced front panel with Chinese display
	L							Enhanced front panel with English display and user-programmable pushbuttons
	N							Enhanced front panel with French display and user-programmable pushbuttons
	T							Enhanced front panel with Russian display and user-programmable pushbuttons
	V							Enhanced front panel with Chinese display and user-programmable pushbuttons
	W							Enhanced front panel with Turkish display
	Y							Enhanced front panel with Turkish display and user-programmable pushbuttons
	I							Enhanced front panel with German display
	J							Enhanced front panel with German display and user-programmable pushbuttons
	H							Enhanced front panel with Polish display
	O							Enhanced front panel with Polish display and user-programmable pushbuttons
	E							7" Graphical front panel display in multiple languages with USB front port and user-programmable pushbuttons (English, French, Chinese, Russian, Turkish, German, Polish, Japanese)
POWER SUPPLY	H							125 / 250 V AC/DC power supply
(redundant supply must	H						RH	125 / 250 V AC/DC with redundant 125 / 250 V AC/DC power supply
be same type as main supply)	L							24 to 48 V (DC only) power supply
	L						RL	24 to 48 V (DC only) with redundant 24 to 48 V DC power supply
ENHANCED DIAGNOSTICS CT/VT DSP				XX		XX		None
(requires all DSP to be enhanced diagnostic)		8L		8L		8L		Standard 4CT/4VT with enhanced diagnostics
		8M		8M		8M		Sensitive ground 4CT/4VT with enhanced diagnostics
		8N		8N		8N		Standard 8CT with enhanced diagnostics
		8R		8R		8R		Sensitive ground 8CT with enhanced diagnostics
		8V		8V		8V		Standard 8VT with enhanced diagnostics
CONTACT INPUTS/OUTPUTS			XX	XX	XX	XX	XX	None
			4C	4C	4C	4C	4C	4 Solid-state (current with optional voltage) MOSFET outputs
			6A	6A	6A	6A	6A	2 Form-A (voltage with optional current) and 2 Form-C outputs, 8 contact inputs
			6B	6B	6B	6B	6B	2 Form-A (voltage with optional current) and 4 Form-C outputs, 4 contact inputs
			6C	6C	6C	6C	6C	8 Form-C outputs
			6D	6D	6D	6D	6D	16 Contact inputs
			6E	6E	6E	6E	6E	4 Form-C outputs, 8 contact inputs
			6F	6F	6F	6F	6F	8 Fast Form-C outputs
			6G	6G	6G	6G	6G	4 Form-A (voltage with optional current) outputs, 8 contact inputs
			6H	6H	6H	6H	6H	6 Form-A (voltage with optional current) outputs, 4 contact inputs
			6K	6K	6K	6K	6K	4 Form-C and 4 Fast Form-C outputs
			6L	6L	6L	6L	6L	2 Form-A (current with optional voltage) and 2 Form-C outputs, 8 contact inputs
			6M	6M	6M	6M	6M	2 Form-A (current with optional voltage) and 4 Form-C outputs, 4 contact inputs
			6N	6N	6N	6N	6N	4 Form-A (current with optional voltage) outputs, 8 contact inputs
			6P	6P	6P	6P	6P	6 Form-A (current with optional voltage) outputs, 4 contact inputs
			6R	6R	6R	6R	6R	2 Form-A (no monitoring) and 2 Form-C outputs, 8 contact inputs
			6S	6S	6S	6S	6S	2 Form-A (no monitoring) and 4 Form-C outputs, 4 contact inputs
			6T	6T	6T	6T	6T	4 Form-A (no monitoring) outputs, 8 contact inputs
			6U	6U	6U	6U	6U	6 Form-A (no monitoring) outputs, 4 contact inputs
			6V	6V	6V	6V	6V	2 Form-A outputs, 1 Form-C output, 2 Form-A (no monitoring) latching outputs, 8 contact inputs
			6W	6W	6W	6W	6W	30 Contact inputs - pin terminals (max 4 modules)
			6X	6X	6X	6X	6X	18 Form-A (no monitoring) outputs - pin terminals (max 4 modules)
TRANSDUCER INPUTS/OUTPUTS			5A	5A	5A	5A	5A	4 DCmA inputs, 4 DCmA outputs (only one 5A module is allowed)
INTER-RELAY						2H	2H	IEEE C37.94, 820 nm, 128 kbps, multimode, LED, 2 Channels
COMMUNICATIONS						2I	2I	Channel 1 - IEEE C37.94, MM, 64/128 kbps; Channel 2 - 1300 nm, single-mode, Laser
(select a maximum of 1 per unit)						2J	2J	Channel 1 - IEEE C37.94, MM, 64/128 kbps; Channel 2 - 1550 nm, single-mode, Laser
						77	77	IEEE C37.94, 820 nm, multimode, LED, 2 Channels
						7H	7H	820 nm, multi-mode, LED, 2 Channels
						7I	7I	1300 nm, multi-mode, LED, 2 Channels
						7S	7S	G.703, 2 Channels
						7W	7W	RS422, 2 Channels

Table 2-5: C70 order codes for reduced-size vertical units

	C70 - * ** - * * * - F ** - H ** - M ** - P/R **									Reduced Size Vertical Mount (see note regarding P/R slot below)
BASE UNIT	C70									Base Unit
CPU		T								RS485 with 3 100Base-FX Ethernet, multimode, SFP with LC
		U								RS485 with 1 100Base-TX Ethernet, SFP RJ-45 + 2 100Base-FX Ethernet, multimode, SFP with LC
		V								RS485 with 3 100Base-TX Ethernet, SFP with RJ-45
		W								RS485 with 2 100Base-FX Ethernet, multimode ST + 10/100Base-TX Ethernet, RJ-45
SOFTWARE OPTIONS		00								No software options
		03								IEC 61850
		12								Enhanced capacitor bank control (time and date, capacitor control supervision, automatic voltage regulator)
		13								Enhanced capacitor bank control and IEC 61850
		A0								CyberSentry Lvl 1
		A3								CyberSentry Lvl 1 and IEC 61850
		AC								CyberSentry Lvl 1 and enhanced capacitor bank control
		AD								CyberSentry Lvl 1, IEC 61850, and enhanced capacitor bank control
		B0								IEEE 1588
		B3								IEEE 1588 and IEC 61850
		BC								IEEE 1588 and enhanced capacitor bank control
		BD								IEEE 1588, IEC 61850, and enhanced capacitor bank control
		C0								Parallel Redundancy Protocol (PRP)
		C3								PRP and IEC 61850
		CC								PRP and enhanced capacitor bank control
		CD								PRP, IEC 61850, and enhanced capacitor bank control
		D0								IEEE 1588 and CyberSentry Lvl 1
		D3								IEEE 1588, CyberSentry Lvl 1, and IEC 61850
		DC								IEEE 1588, CyberSentry Lvl 1, and enhanced capacitor bank control
		DD								IEEE 1588, CyberSentry Lvl 1, IEC 61850, and enhanced capacitor bank control
		E0								IEEE 1588 and PRP
		E3								IEEE 1588, PRP, and IEC 61850
		EC								IEEE 1588, PRP, enhanced capacitor bank control
		ED								IEEE 1588, PRP, IEC 61850, and enhanced capacitor bank control
		F0								PRP and CyberSentry Lvl 1
		F3								PRP, CyberSentry Lvl 1, and IEC 61850
		FC								PRP, CyberSentry Lvl 1, and enhanced capacitor bank control
		FD								PRP, CyberSentry Lvl 1, IEC 61850, and enhanced capacitor bank control
		G0								IEEE 1588, PRP, and CyberSentry Lvl 1
		G3								IEEE 1588, PRP, CyberSentry Lvl 1, and IEC 61850

2

C70	- *	**	- *	*	*	- F	**	- H	**	- M	**	- P/R	**	Reduced Size Vertical Mount (see note regarding P/R slot below)
		GC												IEEE 1588, PRP, CyberSentry Lvl 1, and enhanced capacitor bank control
		GD												IEEE 1588, PRP, CyberSentry Lvl 1, IEC 61850, and enhanced capacitor bank control
		J0												IEC 60870-5-103
		J3												IEC 60870-5-103 and IEC 61850
		JC												IEC 60870-5-103 and enhanced capacitor bank control
		JD												IEC 60870-5-103, IEC 61850, and enhanced capacitor bank control
		K0												IEEE 1588, PRP, and IEC 60870-5-103
		K3												IEEE 1588, PRP, IEC 60870-5-103, and IEC 61850
		KC												IEEE 1588, PRP, IEC 60870-5-103, and enhanced capacitor bank control
		KD												IEEE 1588, PRP, IEC 60870-5-103, IEC 61850, and enhanced capacitor bank control
		L0												IEC 60870-5-103, IEEE 1588, PRP, and CyberSentry Lvl 1
		L3												IEC 60870-5-103, IEEE 1588, PRP, CyberSentry Lvl 1, and IEC 61850
		LC												IEC 60870-5-103, IEEE 1588, PRP, CyberSentry Lvl 1, and enhanced capacitor bank control
		LD												IEC 60870-5-103, IEEE 1588, PRP, CyberSentry Lvl 1, IEC 61850, and enhanced capacitor bank control
MOUNT/COATING			V											Vertical (3/4 rack)
			B											Vertical (3/4 rack) with harsh-environment coating
FRONT PANEL + INTERFACE				F										English display
				D										French display
				R										Russian display
				K										Enhanced front panel with English display
				M										Enhanced front panel with French display
				Q										Enhanced front panel with Russian display
				U										Enhanced front panel with Chinese display
				L										Enhanced front panel with English display and user-programmable pushbuttons
				N										Enhanced front panel with French display and user-programmable pushbuttons
				T										Enhanced front panel with Russian display and user-programmable pushbuttons
				V										Enhanced front panel with Chinese display and user-programmable pushbuttons
				W										Enhanced front panel with Turkish display
				Y										Enhanced front panel with Turkish display and user-programmable pushbuttons
				I										Enhanced front panel with German display
				J										Enhanced front panel with German display and user-programmable pushbuttons
POWER SUPPLY					H									125 / 250 V AC/DC power supply
					L									24 to 48 V (DC only) power supply
ENHANCED DIAGNOSTICS CT/VT DSP (requires all DSP to be enhanced diagnostic)						XX			XX					None
						8L			8L					Standard 4CT/4VT with enhanced diagnostics
						8M			8M					Sensitive ground 4CT/4VT with enhanced diagnostics
						8N			8N					Standard 8CT with enhanced diagnostics
						8R			8R					Sensitive ground 8CT with enhanced diagnostics
						8V			8V					Standard 8VT with enhanced diagnostics
CONTACT INPUTS/OUTPUTS							XX		XX		XX			None
							4C		4C		4C			4 Solid-state (current with optional voltage) MOSFET outputs
							6A		6A		6A			2 Form-A (voltage with optional current) and 2 Form-C outputs, 8 contact inputs
							6B		6B		6B			2 Form-A (voltage with optional current) and 4 Form-C outputs, 4 contact inputs
							6C		6C		6C			8 Form-C outputs
							6D		6D		6D			16 Contact inputs
							6E		6E		6E			4 Form-C outputs, 8 contact inputs
							6F		6F		6F			8 Fast Form-C outputs
							6G		6G		6G			4 Form-A (voltage with optional current) outputs, 8 contact inputs
							6H		6H		6H			6 Form-A (voltage with optional current) outputs, 4 contact inputs
							6K		6K		6K			4 Form-C and 4 Fast Form-C outputs
							6L		6L		6L			2 Form-A (current with optional voltage) and 2 Form-C outputs, 8 contact inputs
							6M		6M		6M			2 Form-A (current with optional voltage) and 4 Form-C outputs, 4 contact inputs
							6N		6N		6N			4 Form-A (current with optional voltage) outputs, 8 contact inputs
							6P		6P		6P			6 Form-A (current with optional voltage) outputs, 4 contact inputs
							6R		6R		6R			2 Form-A (no monitoring) and 2 Form-C outputs, 8 contact inputs
							6S		6S		6S			2 Form-A (no monitoring) and 4 Form-C outputs, 4 contact inputs
							6T		6T		6T			4 Form-A (no monitoring) outputs, 8 contact inputs
							6U		6U		6U			6 Form-A (no monitoring) outputs, 4 contact inputs
							6V		6V		6V			2 Form-A outputs, 1 Form-C output, 2 Form-A (no monitoring) latching outputs, 8 contact inputs
							6W		6W		6W			30 Contact inputs - pin terminals (max 4 modules)
							6X		6X		6X			18 Form-A (no monitoring) outputs - pin terminals (max 4 modules)
TRANSDUCER INPUTS/OUTPUTS							5A		5A		5A			4 DCmA inputs, 4 DCmA outputs (only one 5A module is allowed)
INTER-RELAY COMMUNICATIONS (select a maximum of 1 per unit) For the last module, rear slot P is used for digital input/output modules; rear slot R is used for inter-relay communications modules.											2H			IEEE C37.94, 820 nm, 128 kbps, multimode, LED, 2 Channels
											2I			Channel 1 - IEEE C37.94, MM, 64/128 kbps; Channel 2 - 1300 nm, single-mode, Laser
											2J			Channel 1 - IEEE C37.94, MM, 64/128 kbps; Channel 2 - 1300 nm, single-mode, Laser
											77			IEEE C37.94, 820 nm, multimode, LED, 2 Channels
											7H			820 nm, multimode, LED, 2 Channels
											7I			1300 nm, multimode, LED, 2 Channels
											7S			G.703, 2 Channels
											7W			RS422, 2 Channels

2.3.2 Order codes with process bus modules

Table 2-6: C70 order codes for horizontal units with process bus

	C70	- *	**	- *	*	*	- F	**	- H	**	- M	**	- P	**	- U	**	- W/X	**	Full Size Horizontal Mount
BASE UNIT	C70																		Base Unit
CPU		T																	RS485 with 3 100Base-FX Ethernet, multimode, SFP with LC
		U																	RS485 with 1 100Base-TX Ethernet, SFP RJ-45 + 2 100Base-FX Ethernet, multimode, SFP with LC
		V																	RS485 with 3 100Base-TX Ethernet, SFP with RJ-45
		W																	RS485 with 2 100Base-FX Ethernet, multimode ST + 10/100Base-TX Ethernet, RJ-45
SOFTWARE OPTIONS			00																No software options
			03																IEC 61850
			12																Enhanced capacitor bank control (time and date, capacitor control supervision, automatic voltage regulator)
			13																Enhanced capacitor bank control and IEC 61850
			A0																CyberSentry Lvl 1
			A3																CyberSentry Lvl 1 and IEC 61850
			AC																CyberSentry Lvl 1 and enhanced capacitor bank control
			AD																CyberSentry Lvl 1, IEC 61850, and enhanced capacitor bank control
			B0																IEEE 1588
			B3																IEEE 1588 and IEC 61850
			BC																IEEE 1588 and enhanced capacitor bank control
			BD																IEEE 1588, IEC 61850, and enhanced capacitor bank control
			C0																Parallel Redundancy Protocol (PRP)
			C3																PRP and IEC 61850
			CC																PRP and enhanced capacitor bank control
			CD																PRP, IEC 61850, and enhanced capacitor bank control

C70	- * **	- *	*	- F **	- H **	- M **	- P **	- U **	- W/X **			Full Size Horizontal Mount
	D0											IEEE 1588 and CyberSentry Lvl 1
	D3											IEEE 1588, CyberSentry Lvl 1, and IEC 61850
	DC											IEEE 1588, CyberSentry Lvl 1, and enhanced capacitor bank control
	DD											IEEE 1588, CyberSentry Lvl 1, IEC 61850, and enhanced capacitor bank control
	E0											IEEE 1588 and PRP
	E3											IEEE 1588, PRP, and IEC 61850
	EC											IEEE 1588, PRP, enhanced capacitor bank control
	ED											IEEE 1588, PRP, IEC 61850, and enhanced capacitor bank control
	F0											PRP and CyberSentry Lvl 1
	F3											PRP, CyberSentry Lvl 1, and IEC 61850
	FC											PRP, CyberSentry Lvl 1, and enhanced capacitor bank control
	FD											PRP, CyberSentry Lvl 1, IEC 61850, and enhanced capacitor bank control
	G0											IEEE 1588, PRP, and CyberSentry Lvl 1
	G3											IEEE 1588, PRP, CyberSentry Lvl 1, and IEC 61850
	GC											IEEE 1588, PRP, CyberSentry Lvl 1, and enhanced capacitor bank control
	GD											IEEE 1588, PRP, CyberSentry Lvl 1, IEC 61850, and enhanced capacitor bank control
	J0											IEC 60870-5-103
	J3											IEC 60870-5-103 and IEC 61850
	JC											IEC 60870-5-103 and enhanced capacitor bank control
	JD											IEC 60870-5-103, IEC 61850, and enhanced capacitor bank control
	K0											IEEE 1588, PRP, and IEC 60870-5-103
	K3											IEEE 1588, PRP, IEC 60870-5-103, and IEC 61850
	KC											IEEE 1588, PRP, IEC 60870-5-103, and enhanced capacitor bank control
	KD											IEEE 1588, PRP, IEC 60870-5-103, IEC 61850, and enhanced capacitor bank control
	L0											IEC 60870-5-103, IEEE 1588, PRP, and CyberSentry Lvl 1
	L3											IEC 60870-5-103, IEEE 1588, PRP, CyberSentry Lvl 1, and IEC 61850
	LC											IEC 60870-5-103, IEEE 1588, PRP, CyberSentry Lvl 1, and enhanced capacitor bank control
	LD											IEC 60870-5-103, IEEE 1588, PRP, CyberSentry Lvl 1, IEC 61850, and enhanced capacitor bank control
MOUNT/COATING		H										Horizontal (19" rack)
		A										Horizontal (19" rack) with harsh environmental coating
FRONT PANEL + INTERFACE			C									English display
			P									English display with 4 small and 12 large programmable pushbuttons
			D									French display
			R									Russian display
			K									Enhanced front panel with English display
			M									Enhanced front panel with French display
			Q									Enhanced front panel with Russian display
			U									Enhanced front panel with Chinese display
			L									Enhanced front panel with English display and user-programmable pushbuttons
			N									Enhanced front panel with French display and user-programmable pushbuttons
			T									Enhanced front panel with Russian display and user-programmable pushbuttons
			V									Enhanced front panel with Chinese display and user-programmable pushbuttons
			W									Enhanced front panel with Turkish display
			Y									Enhanced front panel with Turkish display and user-programmable pushbuttons
			I									Enhanced front panel with German display
			J									Enhanced front panel with German display and user-programmable pushbuttons
			H									Enhanced front panel with Polish display
			O									Enhanced front panel with Polish display and user-programmable pushbuttons
			E									7" Graphical front panel display in multiple languages with USB front port and user-programmable pushbuttons (English, French, Chinese, Russian, Turkish, German, Polish, Japanese)
POWER SUPPLY				H								125 / 250 V AC/DC power supply
(redundant supply must				H							RH	125 / 250 V AC/DC with redundant 125 / 250 V AC/DC power supply
be same type as main supply)				L								24 to 48 V (DC only) power supply
				L							RL	24 to 48 V (DC only) with redundant 24 to 48 V DC power supply
PROCESS BUS					XX		XX		XX			None
(non-HardFiber requires IEC 61850, PRP,					XX	81	XX		XX			IEC 61850 Process Bus Module for HardFiber, 8 x
IEEE 1588 software options)					XX	85	XX		XX			IEC 61850-9-2LE and IEC 61869 Process Bus Module, 2 x 1000Base-SX, LC
					XX	86	XX		XX			IEC 61850-9-2LE and IEC 61869 Process Bus Module, 4 x 1000Base-SX + 4 x 100Base-FX, LC
					XX	87	XX		XX			IEC 61850-9-2LE and IEC 61869 Process Bus Module, 4 x 100Base-FX, LC
CONTACT INPUTS/OUTPUTS								XX	XX		XX	None
								4C	4C			4 Solid-state (current with optional voltage) MOSFET outputs
								6A	6A			2 Form-A (voltage with optional current) and 2 Form-C outputs, 8 contact inputs
								6B	6B			2 Form-A (voltage with optional current) and 4 Form-C outputs, 4 contact inputs
								6C	6C			8 Form-C outputs
								6D	6D			16 Contact inputs
								6E	6E			4 Form-C outputs, 8 contact inputs
								6F	6F			8 Fast Form-C outputs
								6G	6G			4 Form-A (voltage with optional current) outputs, 8 contact inputs
								6H	6H			6 Form-A (voltage with optional current) outputs, 4 contact inputs
								6K	6K			4 Form-C and 4 Fast Form-C outputs
								6L	6L			2 Form-A (current with optional voltage) and 2 Form-C outputs, 8 contact inputs
								6M	6M			2 Form-A (current with optional voltage) and 4 Form-C outputs, 4 contact inputs
								6N	6N			4 Form-A (current with optional voltage) outputs, 8 contact inputs
								6P	6P			6 Form-A (current with optional voltage) outputs, 4 contact inputs
								6R	6R			2 Form-A (no monitoring) and 2 Form-C outputs, 8 contact inputs
								6S	6S			2 Form-A (no monitoring) and 4 Form-C outputs, 4 contact inputs
								6T	6T			4 Form-A (no monitoring) outputs, 8 contact inputs
								6U	6U			6 Form-A (no monitoring) outputs, 4 contact inputs
								6V	6V			2 Form-A outputs, 1 Form-C output, 2 Form-A (no monitoring) latching outputs, 8 contact inputs
								6W	6W			30 Contact inputs - pin terminals (max 4 modules)
								6X	6X			18 Form-A (no monitoring) outputs - pin terminals (max 4 modules)
INTER-RELAY											2H	IEEE C37.94, 820 nm, 128 kbps, multimode, LED, 2 Channels
COMMUNICATIONS											2I	Channel 1 - IEEE C37.94, MM, 64/128 kbps; Channel 2 - 1300 nm, single-mode, Laser
(select a maximum of 1 per unit)											2J	Channel 1 - IEEE C37.94, MM, 64/128 kbps; Channel 2 - 1550 nm, single-mode, Laser
											77	IEEE C37.94, 820 nm, multimode, LED, 2 Channels
											7H	820 nm, multimode, LED, 2 Channels
											7I	1300 nm, multimode, LED, 2 Channels
											7S	G.703, 2 Channels
											7W	RS422, 2 Channels

2

Table 2-7: C70 order codes for reduced-size vertical units with process bus

	C70 - * ** - * * - F ** - H ** - M ** - P/R **	Reduced Size Vertical Mount (see note regarding P/R slot below)
BASE UNIT	C70	Base Unit
CPU	T	RS485 with 3 100Base-FX Ethernet, multimode, SFP with LC
	U	RS485 with 1 100Base-TX Ethernet, SFP RJ-45 + 2 100Base-FX Ethernet, multimode, SFP with LC
	V	RS485 with 3 100Base-TX Ethernet, SFP with RJ-45
	W	RS485 with 2 100Base-FX Ethernet, multimode ST + 10/100Base-TX Ethernet, RJ-45
SOFTWARE OPTIONS	00	No software options
	03	IEC 61850
	12	Enhanced capacitor bank control (time and date, capacitor control supervision, automatic voltage regulator)
	13	Enhanced capacitor bank control and IEC 61850
	A0	CyberSentry Lvl 1
	A3	CyberSentry Lvl 1 and IEC 61850
	AC	CyberSentry Lvl 1 and enhanced capacitor bank control
	AD	CyberSentry Lvl 1, IEC 61850, and enhanced capacitor bank control
	B0	IEEE 1588
	B3	IEEE 1588 and IEC 61850
	BC	IEEE 1588 and enhanced capacitor bank control
	BD	IEEE 1588, IEC 61850, and enhanced capacitor bank control
	C0	Parallel Redundancy Protocol (PRP)
	C3	PRP and IEC 61850
	CC	PRP and enhanced capacitor bank control
	CD	PRP, IEC 61850, and enhanced capacitor bank control
	D0	IEEE 1588 and CyberSentry Lvl 1
	D3	IEEE 1588, CyberSentry Lvl 1, and IEC 61850
	DC	IEEE 1588, CyberSentry Lvl 1, and enhanced capacitor bank control
	DD	IEEE 1588, CyberSentry Lvl 1, IEC 61850, and enhanced capacitor bank control
	E0	IEEE 1588 and PRP
	E3	IEEE 1588, PRP, and IEC 61850
	EC	IEEE 1588, PRP, enhanced capacitor bank control
	ED	IEEE 1588, PRP, IEC 61850, and enhanced capacitor bank control
	F0	PRP and CyberSentry Lvl 1
	F3	PRP, CyberSentry Lvl 1, and IEC 61850
	FC	PRP, CyberSentry Lvl 1, and enhanced capacitor bank control
	FD	PRP, CyberSentry Lvl 1, IEC 61850, and enhanced capacitor bank control
	G0	IEEE 1588, PRP, and CyberSentry Lvl 1
	G3	IEEE 1588, PRP, CyberSentry Lvl 1, and IEC 61850
	GC	IEEE 1588, PRP, CyberSentry Lvl 1, and enhanced capacitor bank control
	GD	IEEE 1588, PRP, CyberSentry Lvl 1, IEC 61850, and enhanced capacitor bank control
	J0	IEC 60870-5-103
	J3	IEC 60870-5-103 and IEC 61850
	JC	IEC 60870-5-103 and enhanced capacitor bank control
	JD	IEC 60870-5-103, IEC 61850, and enhanced capacitor bank control
	K0	IEEE 1588, PRP, and IEC 60870-5-103
	K3	IEEE 1588, PRP, IEC 60870-5-103, and IEC 61850
	KC	IEEE 1588, PRP, IEC 60870-5-103, and enhanced capacitor bank control
	KD	IEEE 1588, PRP, IEC 60870-5-103, IEC 61850, and enhanced capacitor bank control
	L0	IEC 60870-5-103, IEEE 1588, PRP, and CyberSentry Lvl 1
	L3	IEC 60870-5-103, IEEE 1588, PRP, CyberSentry Lvl 1, and IEC 61850
	LC	IEC 60870-5-103, IEEE 1588, PRP, CyberSentry Lvl 1, and enhanced capacitor bank control
	LD	IEC 60870-5-103, IEEE 1588, PRP, CyberSentry Lvl 1, IEC 61850, and enhanced capacitor bank control
MOUNT/COATING	V	Vertical (3/4 rack)
	B	Vertical (3/4 rack) with harsh environmental coating
FRONT PANEL + INTERFACE	F	English display
	D	French display
	R	Russian display
	K	Enhanced front panel with English display
	M	Enhanced front panel with French display
	Q	Enhanced front panel with Russian display
	U	Enhanced front panel with Chinese display
	L	Enhanced front panel with English display and user-programmable pushbuttons
	N	Enhanced front panel with French display and user-programmable pushbuttons
	T	Enhanced front panel with Russian display and user-programmable pushbuttons
	V	Enhanced front panel with Chinese display and user-programmable pushbuttons
	W	Enhanced front panel with Turkish display
	Y	Enhanced front panel with Turkish display and user-programmable pushbuttons
	I	Enhanced front panel with German display
	J	Enhanced front panel with German display and user-programmable pushbuttons
POWER SUPPLY	H	125 / 250 V AC/DC power supply
	L	24 to 48 V (DC only) power supply
PROCESS BUS (non-HardFiber requires IEC 61850, PRP. IEEE 1588 software options)	XX	None
	XX 81 XX	IEC 61850 Process Bus Module for HardFiber, 8 x
	XX 85 XX	IEC 61850-9-2LE and IEC 61869 Process Bus Module, 4 x 1000Base-SX, LC
	XX 86 XX	IEC 61850-9-2LE and IEC 61869 Process Bus Module, 4 x 1000Base-SX + 4 x 100Base-FX, LC
	XX 87 XX	IEC 61850-9-2LE and IEC 61869 Process Bus Module, 8 x 100Base-FX, LC
CONTACT INPUTS/OUTPUTS	XX	None
		4 Solid-state (current with optional voltage) MOSFET outputs
		2 Form-A (voltage with optional current) and 2 Form-C outputs, 8 contact inputs
		2 Form-A (voltage with optional current) and 4 Form-C outputs, 4 contact inputs
		8 Form-C outputs
		16 Contact inputs
		4 Form-C outputs, 8 contact inputs
		8 Fast Form-C outputs
		4 Form-A (voltage with optional current) outputs, 8 contact inputs
		6 Form-A (voltage with optional current) outputs, 4 contact inputs
		4 Form-C and 4 Fast Form-C outputs
		2 Form-A (current with optional voltage) and 2 Form-C outputs, 8 contact inputs
		2 Form-A (current with optional voltage) and 4 Form-C outputs, 4 contact inputs
		4 Form-A (current with optional voltage) outputs, 8 contact inputs
		6 Form-A (current with optional voltage) outputs, 4 contact inputs
		2 Form-A (no monitoring) and 2 Form-C outputs, 8 contact inputs
		2 Form-A (no monitoring) and 4 Form-C outputs, 4 contact inputs
		4 Form-A (no monitoring) outputs, 8 contact inputs
		6 Form-A (no monitoring) outputs, 4 contact inputs
		2 Form-A outputs, 1 Form-C output, 2 Form-A (no monitoring) latching outputs, 8 contact inputs
		30 Contact inputs - pin terminals (max 4 modules)
		18 Form-A (no monitoring) outputs - pin terminals (max 4 modules)

C70 - * ** - * * * - F ** - H ** - M ** - P/R **		Reduced Size Vertical Mount (see note regarding P/R slot below)
INTER-RELAY COMMUNICATIONS (select a maximum of 1 per unit) For the last module, rear slot P is used for digital and transducer input/output modules; rear slot R is used for inter-relay communications modules.	2H	IEEE C37.94, 820 nm, 128 kbps, multimode, LED, 2 Channels
	2I	Channel 1 - IEEE C37.94, MM, 64/128 kbps; Channel 2 - 1300 nm, single-mode, Laser
	2J	Channel 1 - IEEE C37.94, MM, 64/128 kbps; Channel 2 - 1550 nm, single-mode, Laser
	77	IEEE C37.94, 820 nm, multimode, LED, 2 Channels
	7H	820 nm, multimode, LED, 2 Channels
	7I	1300 nm, multimode, LED, 2 Channels
	7S	G.703, 2 Channels
	7W	RS422, 2 Channels

2.3.3 Replacement modules

Replacement modules can be ordered separately. When ordering a replacement CPU module or front panel, provide the serial number of your existing unit.

Not all replacement modules apply to the C70 relay. The modules specified in the order codes for the C70 are available as replacement modules for the C70.

The order codes shown here are subject to change without notice. See the web page for the product for the latest options.

Table 2-8: UR order codes for replacement modules, horizontal units

	UR - **	- *	
POWER SUPPLY redundant supply only available in horizontal units and must be same type as main supply	SH	A	125 / 300 V AC/DC
	SL	A	24 to 48 V (DC only)
CPU	T		RS485 with 3 100Base-FX Ethernet, multimode, SFP with LC
	U		RS485 with 1 100Base-TX Ethernet, SFP RJ-45 + 2 100Base-FX Ethernet, multimode, SFP with LC
	V		RS485 with 3 100Base-TX Ethernet, SFP with RJ-45
	W		RS485 with 2 100Base-FX Ethernet, multimode ST + 10/100Base-TX Ethernet, RJ-45
FRONT PANEL + INTERFACE	3C		Horizontal front panel with keypad and English display
	3D		Horizontal front panel with keypad and French display
	3R		Horizontal front panel with keypad and Russian display
	3A		Horizontal front panel with keypad and Chinese display
	3P		Horizontal front panel with keypad, user-programmable pushbuttons, and English display
	3G		Horizontal front panel with keypad, user-programmable pushbuttons, and French display
	3S		Horizontal front panel with keypad, user-programmable pushbuttons, and Russian display
	3B		Horizontal front panel with keypad, user-programmable pushbuttons, and Chinese display
	3K		Enhanced front panel with English display
	3M		Enhanced front panel with French display
	3Q		Enhanced front panel with Russian display
	3U		Enhanced front panel with Chinese display
	3L		Enhanced front panel with English display and user-programmable pushbuttons
	3N		Enhanced front panel with French display and user-programmable pushbuttons
	3T		Enhanced front panel with Russian display and user-programmable pushbuttons
	3V		Enhanced front panel with Chinese display and user-programmable pushbuttons
	3I		Enhanced front panel with German display
	3J		Enhanced front panel with German display and user-programmable pushbuttons
	3H		Enhanced front panel with Polish display
	3O		Enhanced front panel with Polish display and user-programmable pushbuttons
	3Z		Enhanced front panel with Japanese display
	3X		Enhanced front panel with Japanese display and user-programmable pushbuttons
	3E		7" Graphical front panel display in multiple languages with USB front port and user-programmable pushbuttons
CONTACT INPUTS AND OUTPUTS	4A		4 Solid-State (no monitoring) MOSFET outputs
	4B		4 Solid-State (voltage with optional current) MOSFET outputs
	4C		4 Solid-State (current with optional voltage) MOSFET outputs
	4D		16 Contact inputs with Auto-Burnishing
	4L		14 Form-A (no monitoring) Latching outputs
	67		8 Form-A (no monitoring) outputs
	6A		2 Form-A (voltage with optional current) and 2 Form-C outputs, 8 contact inputs
	6B		2 Form-A (voltage with optional current) and 4 Form-C outputs, 4 contact inputs
	6C		8 Form-C outputs
	6D		16 Contact inputs
	6E		4 Form-C outputs, 8 contact inputs
	6F		8 Fast Form-C outputs
	6G		4 Form-A (voltage with optional current) outputs, 8 contact inputs
	6H		6 Form-A (voltage with optional current) outputs, 4 contact inputs
	6K		4 Form-C and 4 Fast Form-C outputs
	6L		2 Form-A (current with optional voltage) and 2 Form-C outputs, 8 contact inputs
	6M		2 Form-A (current with optional voltage) and 4 Form-C outputs, 4 contact inputs
	6N		4 Form-A (current with optional voltage) outputs, 8 contact inputs
	6P		6 Form-A (current with optional voltage) outputs, 4 contact inputs
	6R		2 Form-A (no monitoring) and 2 Form-C outputs, 8 contact inputs
	6S		2 Form-A (no monitoring) and 4 Form-C outputs, 4 contact inputs
	6T		4 Form-A (no monitoring) outputs, 8 contact inputs
	6U		6 Form-A (no monitoring) outputs, 4 contact inputs
	6V		2 Form-A outputs, 1 Form-C output, 2 Form-A (no monitoring) latching outputs, 8 contact inputs
	6W		30 Contact inputs - pin terminals (max 4 modules)
	6X		18 Form-A (no monitoring) outputs - pin terminals (max 4 modules)
CT/VT MODULES (not available for the C30)	8L		Standard 4CT/4VT with enhanced diagnostics
	8N		Standard 8CT with enhanced diagnostics
	8M		Sensitive Ground 4CT/4VT with enhanced diagnostics
	8R		Sensitive Ground 8CT with enhanced diagnostics
	8V		Standard 8VT with enhanced diagnostics (only one module supported)
PROCESS BUS MODULES	81		IEC 61850 Process Bus Module for HardFiber, 8 x
	85		IEC 61850-9-2LE and IEC 61869 Process Bus Module, 2 x 1000Base-SX, LC
	86		IEC 61850-9-2LE and IEC 61869 Process Bus Module, 4 x 1000Base-SX + 4 x 100Base-FX, LC
	87		IEC 61850-9-2LE and IEC 61869 Process Bus Module, 4 x 100Base-FX, LC
INTER-RELAY COMMUNICATIONS	2A		C37.94SM, 1300 nm single-mode, ELED, 1 channel single-mode
	2B		C37.94SM, 1300 nm single-mode, ELED, 2 channel single-mode
	2H		IEEE C37.94, 820 nm, 128 kbps, multimode, LED, 2 Channels
	2I		Channel 1 - IEEE C37.94, multimode, 64/128 kbps; Channel 2 - 1300 nm, single-mode, Laser
	2J		Channel 1 - IEEE C37.94, multimode, 64/128 kbps; Channel 2 - 1550 nm, single-mode, Laser

2

	UR - **	- *	
	72		1550 nm, single-mode, Laser, 1 Channel
	73		1550 nm, single-mode, Laser, 2 Channel
	76		IEEE C37.94, 820 nm, multimode, LED, 1 Channel
	77		IEEE C37.94, 820 nm, multimode, LED, 2 Channels
	7A		820 nm, multimode, LED, 1 Channel
	7B		1300 nm, multimode, LED, 1 Channel
	7C		1300 nm, single-mode, ELED, 1 Channel
	7D		1300 nm, single-mode, Laser, 1 Channel
	7F		Channel 1 - G.703; Channel 2 - 1300 nm, multimode
	7G		Channel 1 - G.703; Channel 2 - 1300 nm, single-mode ELED
	7H		820 nm, multimode, LED, 2 Channels
	7I		1300 nm, multimode, LED, 2 Channels
	7J		1300 nm, single-mode, ELED, 2 Channels
	7K		1300 nm, single-mode, Laser, 2 Channels
	7M		Channel 1 - RS422; Channel 2 - 1300 nm, multimode, LED
	7N		Channel 1 - RS422; Channel 2 - 1300 nm, single-mode, ELED
	7P		Channel 1 - RS422; Channel 2 - 1300 nm, single-mode, Laser
	7Q		Channel 1 - G.703; Channel 2 - 1300 nm, single-mode Laser
	7R		G.703, 1 Channel
	7S		G.703, 2 Channels
	7T		RS422, 1 Channel
	7W		RS422, 2 Channels
TRANSDUCER INPUTS/OUTPUTS	5A		4 DCmA inputs, 4 DCmA outputs (only one 5A or 5D module is allowed)
	5C		8 RTD inputs
	5D		4 RTD inputs, 4 DCmA outputs (only one 5A or 5D module is allowed)
	5E		4 DCmA inputs, 4 RTD inputs
	5F		8 DCmA inputs

Table 2-9: UR order codes for replacement modules, vertical units

	UR - **	- *	
POWER SUPPLY	SH	B	125 / 300 V AC/DC
	SL	B	24 to 48 V (DC only)
CPU	T		RS485 with 3 100Base-FX Ethernet, multimode, SFP with LC
	U		RS485 with 1 100Base-TX Ethernet, SFP RJ-45 + 2 100Base-FX Ethernet, multimode, SFP with LC
	V		RS485 with 3 100Base-TX Ethernet, SFP with RJ-45
	W		RS485 with 2 100Base-FX Ethernet, multimode ST + 10/100Base-TX Ethernet, RJ-45
FRONT PANEL + INTERFACE	3F		Vertical front panel with keypad and English display
	3D		Vertical front panel with keypad and French display
	3R		Vertical front panel with keypad and Russian display
	3A		Vertical front panel with keypad and Chinese display
	3K		Enhanced front panel with English display
	3M		Enhanced front panel with French display
	3Q		Enhanced front panel with Russian display
	3U		Enhanced front panel with Chinese display
	3L		Enhanced front panel with English display and user-programmable pushbuttons
	3N		Enhanced front panel with French display and user-programmable pushbuttons
	3T		Enhanced front panel with Russian display and user-programmable pushbuttons
	3V		Enhanced front panel with Chinese display and user-programmable pushbuttons
	3I		Enhanced front panel with German display
	3J		Enhanced front panel with German display and user-programmable pushbuttons
CONTACT INPUTS/OUTPUTS	4A		4 Solid-State (no monitoring) MOSFET outputs
	4B		4 Solid-State (voltage with optional current) MOSFET outputs
	4C		4 Solid-State (current with optional voltage) MOSFET outputs
	4D		16 Contact inputs with Auto-Burnishing
	4L		14 Form-A (no monitoring) Latching outputs
	67		8 Form-A (no monitoring) outputs
	6A		2 Form-A (voltage with optional current) and 2 Form-C outputs, 8 contact inputs
	6B		2 Form-A (voltage with optional current) and 4 Form-C outputs, 4 contact inputs
	6C		8 Form-C outputs
	6D		16 Contact inputs
	6E		4 Form-C outputs, 8 contact inputs
	6F		8 Fast Form-C outputs
	6G		4 Form-A (voltage with optional current) outputs, 8 contact inputs
	6H		6 Form-A (voltage with optional current) outputs, 4 contact inputs
	6K		4 Form-C and 4 Fast Form-C outputs
	6L		2 Form-A (current with optional voltage) and 2 Form-C outputs, 8 contact inputs
	6M		2 Form-A (current with optional voltage) and 4 Form-C outputs, 4 contact inputs
	6N		4 Form-A (current with optional voltage) outputs, 8 contact inputs
	6P		6 Form-A (current with optional voltage) outputs, 4 contact inputs
	6R		2 Form-A (no monitoring) and 2 Form-C outputs, 8 contact inputs
	6S		2 Form-A (no monitoring) and 4 Form-C outputs, 4 contact inputs
	6T		4 Form-A (no monitoring) outputs, 8 contact inputs
	6U		6 Form-A (no monitoring) outputs, 4 contact inputs
	6V		2 Form-A outputs, 1 Form-C output, 2 Form-A (no monitoring) latching outputs, 8 contact inputs
	6W		30 Contact inputs - pin terminals (max 4 modules)
	6X		18 Form-A (no monitoring) outputs - pin terminals (max 4 modules)
CT/VT MODULES	8L		Standard 4CT/4VT with enhanced diagnostics
(not available for the C30)	8N		Standard 8CT with enhanced diagnostics
	8M		Sensitive Ground 4CT/4VT with enhanced diagnostics
	8R		Sensitive Ground 8CT with enhanced diagnostics
	8V		Standard 8VT with enhanced diagnostics
PROCESS BUS	81		IEC 61850 Process Bus Module for HardFiber, 8 x
	85		IEC 61850-9-2LE and IEC 61869 Process Bus Module, 2 x 1000Base-SX, LC
	86		IEC 61850-9-2LE and IEC 61869 Process Bus Module, 4 x 1000Base-SX + 4 x 100BaseFx, LC
	87		IEC 61850-9-2LE and IEC 61869 Process Bus Module, 4 x 100Base-FX, LC
INTER-RELAY COMMUNICATIONS	2A		C37.94SM, 1300 nm single-mode, ELED, 1 channel single-mode
	2B		C37.94SM, 1300 nm single-mode, ELED, 2 channel single-mode
	2H		IEEE C37.94, 820 nm, 128 kbps, multimode, LED, 2 Channels
	2I		Channel 1 - IEEE C37.94, multimode, 64/128 kbps; Channel 2 - 1300 nm, single-mode, Laser
	2J		Channel 1 - IEEE C37.94, multimode, 64/128 kbps; Channel 2 - 1550 nm, single-mode, Laser
	72		1550 nm, single-mode, Laser, 1 Channel
	73		1550 nm, single-mode, Laser, 2 Channel
	76		IEEE C37.94, 820 nm, 64 kbps, multimode, LED, 1 Channel
	77		IEEE C37.94, 820 nm, 64 kbps, multimode, LED, 2 Channels
	7A		820 nm, multimode, LED, 1 Channel
	7B		1300 nm, multimode, LED, 1 Channel
	7C		1300 nm, single-mode, ELED, 1 Channel
	7D		1300 nm, single-mode, Laser, 1 Channel
	7F		Channel 1 - G.703; Channel 2 - 1300 nm, multimode

UR - ** - *	
7G	Channel 1 - G.703; Channel 2 - 1300 nm, single-mode ELED
7H	820 nm, multimode, LED, 2 Channels
7I	1300 nm, multimode, LED, 2 Channels
7J	1300 nm, single-mode, ELED, 2 Channels
7K	1300 nm, single-mode, Laser, 2 Channels
7M	Channel 1 - RS422; Channel 2 - 1300 nm, multimode, LED
7N	Channel 1 - RS422; Channel 2 - 1300 nm, single-mode, ELED
7P	Channel 1 - RS422; Channel 2 - 1300 nm, single-mode, Laser
7Q	Channel 1 - G.703; Channel 2 - 1300 nm, single-mode Laser
7R	G.703, 1 Channel
7S	G.703, 2 Channels
7T	RS422, 1 Channel
7W	RS422, 2 Channels

2.4 Signal processing

2.4.1 UR signal processing

The URs are microprocessor-based protective relays that are designed to measure power system conditions directly via CT and VT inputs and via other sources of information, such as analog inputs, communications inputs, and contact inputs. The following figure shows the overall signal processing in URs.

An analog low pass anti-aliasing filter with a 3 dB corner frequency is set at 2.4 kHz and is used for current and voltage analog filtering as well as signal conditioning. The same filtering is applied for phase, ground currents, phase-to-phase (when applicable), and auxiliary voltages. The 2.4 kHz cut-off frequency applies to both 50 and 60 Hz applications and fixed in the hardware, and thus is not dependent on the system nominal frequency setting.

2

Figure 2-4: UR signal processing

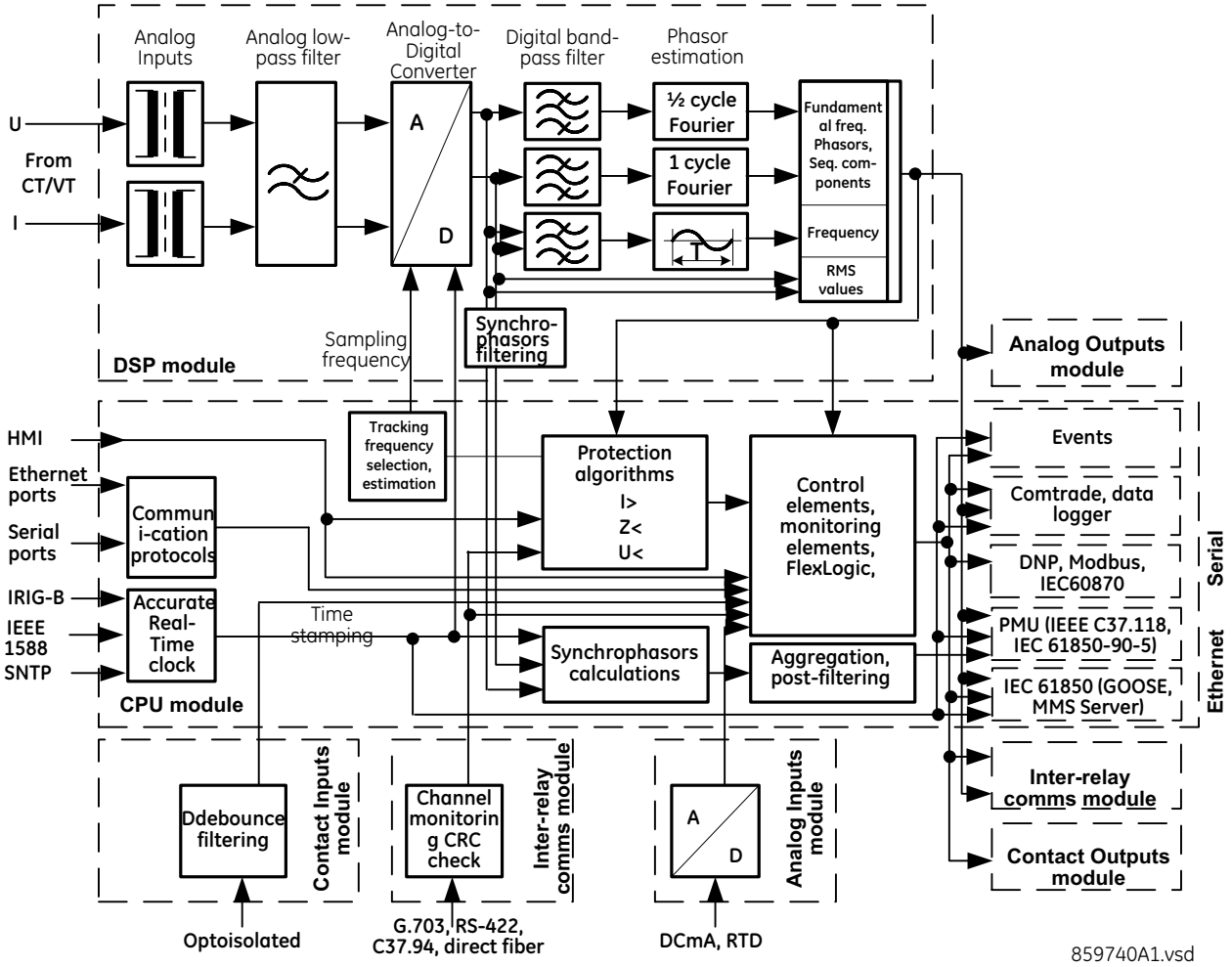

The UR samples its AC signals at 64 samples per cycle, that is, at 3840 Hz in 60 Hz systems, and 3200 Hz in 50 Hz systems. The sampling rate is adjusted dynamically to the actual system frequency by an accurate and fast frequency tracking system.

The analog/digital converter has the following ranges of AC signals:

Voltages:

$$\pm\sqrt{2}\cdot 260(\mathrm{V}) \qquad \textbf{Eq. 2-1}$$

Currents:

$$\pm\sqrt{2}\cdot 46\mathrm{rated}(\mathrm{A}) \qquad \textbf{Eq. 2-2}$$

Current harmonics are estimated based on raw samples with the use of the full-cycle Fourier filter. Harmonics 2nd through 25th are estimated.

True RMS value for the current is calculated on a per-phase basis. The true RMS can be used for demand recording or as an input signal to Time Overcurrent function, if the latter is intended for thermal protection. The true RMS is calculated as per the widely accepted definition:

$$I_{RMS(t)} = \sqrt{\frac{1}{T}\int_{(t-T)}^{t} i^2(t)dt}$$

Eq. 2-3

RMS values include harmonics, inter-harmonics, DC components, and so on, along with fundamental frequency values. The true RMS value reflects thermal effects of the current and is used for the thermal related monitoring and protection functions.

Protection and control functions respond to phasors of the fundamental and/or harmonic frequency components (magnitudes and angles), with an exception for some functions that have an option for RMS or fundamental measurements, or some function responding to RMS only. This type of response is explained typically in each element's section in this instruction manual.

Currents are pre-filtered using a Finite Impulse Response (FIR) digital filter. The filter is designed to reject DC components and low-frequency distortions, without amplifying high-frequency noise. This filter is referred to as a modified MIMIC filter, which provides excellent filtering and overall balance between speed and accuracy of filtering. The filter is cascaded with the full-cycle Fourier filter for the current phasor estimation.

Voltages are pre-filtered using a patented FIR digital filter. The filter has been optimized to reject voltage-transformer-specific distortions, such as Capacitive Voltage Transformer (CVT) noise and high-frequency oscillatory components. The filter is cascaded with the half-cycle Fourier filter for the voltage phasor estimation.

The URs measure power system frequency using the Clarke transformation by estimating the period of the waveform from two consecutive zero-crossings in the same direction (negative-to-positive). Voltage or current samples are pre-filtered using a Finite Impulse Response (FIR) digital filter to remove high frequency noise contained in the signal. The period is used after several security conditions are met, such as true RMS signal must be above 6% nominal for a certain time. If these security conditions are not met, the last valid measurement is used for a specific time after which the UR reverts to nominal system frequency.

Synchrophasors are calculated using a patented convolution integral algorithm. This algorithm allows use of the same time-stamped samples, which are used for protection and taken at the same sampling frequency. This allows URs to use one sampling clock for both protection algorithms and synchrophasors.

Synchrophasors on firmware versions 7.23 and up have been tested and certified to meet IEEE C37.118-2011 and C37.118.1a-2014 standards for both metering and protection classes with outputs available up to 60 synchrophasors per second for the metering class and 120 synchrophasors per second for the protection class. Synchrophasors measurement is also available via IEC 61850-90-5 protocol.

The contact inputs threshold is settable in the firmware with 17, 33, 84, and 166 V DC settings available. Inputs are scanned every 0.5 ms and can be conditioned for the critical applications, using debounce time timer, settable from 0.0 to 16.0 ms. Contact inputs with auto-burnishing are available as well, when external contacts are exposed to the contamination in a harsh industrial environment.

All measured values are available in the UR metering section on the front panel and via communications protocols. Measured analog values and binary signals can be captured in COMTRADE format with sampling rates from 8 to 64 samples per power cycle. Analog values can be captured with the Data Logger, allowing much slower rates extended over a long period of time.

Other advanced UR order code options are available to support IEC 61850 (including fast GOOSE, ICD/CID/IID files, and so on), IEEE 1588 (IEEE C37.238 power profile) based time synchronization, CyberSentry (advanced cyber security), the Parallel Redundancy Protocol (PRP), IEC 60870-5-103, and so on.

2.5 Specifications

Specifications are subject to change without notice.

2.5.1 Protection elements

The operating times include the activation time of a trip rated form-A output contact unless otherwise indicated. FlexLogic operands of a given element are 4 ms faster. Take this into account when using FlexLogic to interconnect with other protection or control elements of the relay, building FlexLogic equations, or interfacing with other intelligent electronic devices (IEDs) or power system devices via communications or different output contacts. If not specified, the operate times given here are for a 60 Hz system at nominal system frequency. Operate times for a 50 Hz system are 1.2 times longer.

NOTE 1 — Protection and control elements with NOTE 1 have additional operating time of up to 3 ms if the C70 is ordered with an IEC 61850-9-2LE / IEC 61869 Process Bus Module (order code 85, 86, 87).

VOLTAGE DIFFERENTIAL

Operation:	per phase
Auto-setting:	on demand from keypad, per phase
Number of elements:	1 per VT bank, maximum of 3
Matching factor:	0.5000 to 2000.0000 in steps of 0.0001, per phase
Number of trip/alarm stages:	4 per phase with individual timers per stage
Pickup threshold:	0.001 to 1.000 pu of bus voltage in steps of 0.001
Pickup level accuracy:	0.003 pu
Hysteresis:	3% or 0.0005 pu, whichever is greater
Pickup delay:	0 to 600.00 s in steps of 0.01
Timer accuracy:	±3% of operate time or ±35 ms, whichever is greater
Operate time:	<35 ms at 60 Hz (see NOTE 1)

CAPACITOR CONTROL

Functionality:	contains remote/local and auto/manual non-volatile latches, collects trip, open and close input requests and issues outputs to control tripping and closing
Closing inhibit delay:	0 to 60 minutes in steps of 1 second
Trip and close seal-in timers:	0 to 60.000 s in steps of 0.001

AUTOMATIC VOLTAGE REGULATOR

Number of elements:	1 per CT/VT module, maximum of 3
Modes:	voltage with load drop compensation or reactive power with power factor limit
Minimum voltage supervision:	0.500 to 1.500 pu in steps of 0.001
Close voltage level:	0.750 to 1.500 pu in steps of 0.001
Open voltage level:	0.750 to 1.500 pu in steps of 0.001
Voltage pickup accuracy:	±0.5% of setting from 10 to 208 V
Close reactive power level:	–1.50 to 1.50 pu in steps of 0.01
Open reactive power level:	–1.50 to 1.50 pu in steps of 0.01
Power pickup accuracy:	±0.05 pu
Power factor limit:	0.50 to 1.00 in steps of 0.01
Power factor accuracy:	±0.05
Hysteresis:	0.02 pu (voltage); 0.05 pu (vars)
Close delay:	0 to 65.353 s in steps of 0.001
Open delay:	0 to 65.353 s in steps of 0.001
Timer accuracy:	±3% of operate time or ±20 ms, whichever is greater
Operate time:	<80 ms at 60 Hz

PHASE/NEUTRAL/GROUND TOC

Current:	Phasor or RMS
Pickup level:	0.020 to 30.000 pu in steps of 0.001
Dropout level:	97% of pickup
Level accuracy:	
0.1 to 2.0 × CT:	±0.5% of reading or ±0.4% of rated (whichever is greater)
> 2.0 × CT:	±1.5% of reading > 2.0 × CT rating

Timing characteristics:	IEEE Moderately/Very/Extremely Inverse; IEC (and BS) A/B/C and Short Inverse; GE IAC Inverse, Short/Very/ Extremely Inverse; I^2t; FlexCurves™ (programmable); (Curve multiplier 0.00 to 600.00 in steps of 0.01 s) Definite Time (Time delay = 0.00 to 600.00 in steps of 0.01 s)
Reset type:	Instantaneous/Timed (per IEEE)
Curve timing accuracy at 1.03 to 20 × pickup:	±3.5% of operate time or ±½ cycle (whichever is greater) from pickup to operate (see NOTE 1)
Voltage restraint:	Modifies pickup current for voltage in the range of 0.1 < V < 0.9 VT Nominal in a fixed linear relationship

PHASE/NEUTRAL/GROUND IOC

Pickup level:	0.020 to 30.000 pu in steps of 0.001
Dropout level:	97% of pickup
Level accuracy:	
0.1 to 2.0 × CT rating:	±0.5% of reading or ±0.4% of rated (whichever is greater)
> 2.0 × CT rating:	±1.5% of reading
Overreach:	<2%
Pickup delay:	0.00 to 600.00 s in steps of 0.01
Reset delay:	0.00 to 600.00 s in steps of 0.01
Operate time:	<16 ms at 3 × pickup at 60 Hz (Phase/Ground IOC) (see NOTE 1) <20 ms at 3 × pickup at 60 Hz (Neutral IOC) (see NOTE 1)
Timer accuracy:	±3.5% of operate time or ±1/4 cycle (whichever is greater)

NEGATIVE SEQUENCE TOC

Pickup level:	0.020 to 30.000 pu in steps of 0.001
Dropout level:	97% of pickup
Level accuracy:	±0.5% of reading or ±0.4% of rated (whichever is greater) from 0.1 to 2.0 x CT rating ±1.5% of reading > 2.0 x CT rating
Timing characteristics:	IEEE Moderately/Very/Extremely Inverse; IEC (and BS) A/B/C and Short Inverse; GE IAC Inverse, Short/Very/ Extremely Inverse; I^2t; FlexCurves™ (programmable) (Curve multiplier = 0.00 to 600.00 in steps of 0.01 s); Definite Time (Time delay = 0.00 to 600.00 in steps of 0.01 s)
Reset type:	Instantaneous/Timed (per IEEE) and Linear
Curve timing accuracy at 1.03 to 20 x pickup:	±3.5% of operate time or ±½ cycle (whichever is greater) from pickup to operate (see NOTE 1)

NEGATIVE SEQUENCE IOC

Pickup level:	0.020 to 30.000 pu in steps of 0.001
Dropout level:	97% of pickup
Level accuracy:	
0.1 to 2.0 × CT rating:	±0.5% of reading or ±0.4% of rated (whichever is greater);
>2.0 × CT rating:	±1.5% of reading
Overreach:	<2%
Pickup delay:	0.00 to 600.00 s in steps of 0.01
Reset delay:	0.00 to 600.00 s in steps of 0.01
Operate time:	<20 ms at 3 × pickup at 60 Hz (see NOTE 1)
Timer accuracy:	±3% of operate time or ±1/4 cycle (whichever is greater)

PHASE DIRECTIONAL OVERCURRENT

Relay connection:	90° (quadrature)
Quadrature voltage:	ABC phase seq.: phase A (V_{BC}), phase B (V_{CA}), phase C (V_{AB}); ACB phase seq.: phase A (V_{CB}), phase B (V_{AC}), phase C (V_{BA})
Polarizing voltage threshold:	0.004 to 3.000 pu in steps of 0.001
Current sensitivity threshold:	0.05 pu
Characteristic angle:	0 to 359° in steps of 1
Angle accuracy:	±2°
Operation time (FlexLogic operands):	
Tripping (reverse load, forward fault):	<12 ms, typically (see NOTE 1)

2

Blocking (forward load, reverse fault): <8 ms, typically (see NOTE 1)

NEUTRAL DIRECTIONAL OVERCURRENT

Directionality:	Co-existing forward and reverse
Polarizing:	Voltage, Current, Dual, Dual-V, Dual-I
Polarizing voltage:	V_0 or VX
Polarizing current:	IG
Operating current:	I_0
Level sensing:	3 × (|I_0| – K × |I_1|), IG Independent for forward and reverse
Restraint, K:	0.000 to 0.500 in steps of 0.001
Characteristic angle:	–90 to 90° in steps of 1
Limit angle:	40 to 90° in steps of 1, independent for forward and reverse
Angle accuracy:	±2°
Offset impedance:	0.00 to 250.00 Ω in steps of 0.01
Pickup level:	0.002 to 30.000 pu in steps of 0.01
Dropout level:	97 to 98%
Operation time:	<16 ms at 3 × pickup at 60 Hz (see NOTE 1)

NEGATIVE SEQUENCE DIRECTIONAL OC

Directionality:	Co-existing forward and reverse
Polarizing:	Voltage
Polarizing voltage:	V_2
Operating current:	I_2
Level sensing:	
Zero-sequence:	|I_0| – K × |I_1|
Negative-sequence:	|I_2| – K × |I_1|
Restraint, K:	0.000 to 0.500 in steps of 0.001
Characteristic angle:	0 to 90° in steps of 1
Limit angle:	40 to 90° in steps of 1, independent for forward and reverse
Angle accuracy:	±2°
Offset impedance:	0.00 to 250.00 Ω in steps of 0.01
Pickup level:	0.015 to 30.000 pu in steps of 0.01
Dropout level:	97%
Operation time:	<16 ms at 3 × pickup at 60 Hz (see NOTE 1)

PHASE CURRENT UNBALANCE

Operation:	per phase
Auto-setting:	on demand from keypad, per phase
Number of elements:	1 per CT bank, maximum of 3
Inherent unbalance factor:	–0.1000 to 0.1000 in steps of 0.0001, per phase
Number of trip/alarm stages:	4 per phase with individual timers per stage
Pickup threshold:	0.001 to 5.000 pu of split-phase CT nominal in steps of 0.001
Pickup level accuracy:	0.002 pu for <1 pu current and <20 CT mismatch between phase and differential CT
Hysteresis:	3% or 0.001 pu, whichever is greater
Pickup delay:	0 to 600.00 s in steps of 0.01
Timer accuracy:	±3% of operate time or ±35 ms, whichever is greater
Operate time:	<35 ms at 60 Hz (see NOTE 1)

NEUTRAL CURRENT UNBALANCE

Auto-setting:	on demand from keypad
Number of elements:	1 per CT bank, to a maximum of 3
Inherent unbalance factor:	magnitude of 0 to 0.1500 in steps of 0.0001, angle of 0 to 359° in steps of 1
Number of trip/alarm stages:	4, with individual timers per stage
Pickup threshold:	0.001 to 5.000 pu of ground input CT in steps of 0.001
Pickup level accuracy:	0.002 pu for <1 pu current and < 20 CT mismatch between phase and neutral CT
Hysteresis:	3% or 0.001 pu, whichever is greater

Slope:	0.0 to 10.0% in steps of 0.1
Pickup delay:	0 to 600.00 s in steps of 0.01
Timer accuracy:	±3% of operate time or ±35 ms, whichever is greater
Operate time:	<35 ms at 60 Hz (see NOTE 1)

NEUTRAL VOLTAGE UNBALANCE

Operation:	compensated for inherent bank and system unbalance
Auto-setting:	on demand from keypad
Number of elements:	1 per VT bank, maximum of 3
Compensating factor:	0.7500 to 1.2500 in steps of 0.0001
Number of trip/alarm stages:	4 with individual timers
Pickup threshold:	0.001 to 1.000 pu of nominal of the bank neutral point VT in steps of 0.001
Slope:	0 to 10% in steps of 0.1
Pickup level accuracy:	0.003 pu for <10 VT mismatch between phase and neutral VT
Hysteresis:	3% or 0.001 pu whichever is greater
Pickup delay:	0 to 600.00 s in steps of 0.01
Timer accuracy:	±3% of operate time or ±35 ms, whichever is greater
Operate time:	<35 ms at 60 Hz (see NOTE 1)

PHASE UNDERVOLTAGE

Pickup level:	0.004 to 3.000 pu in steps of 0.001
Dropout level:	102% of pickup
Level accuracy:	±0.5% of reading from 10 to 208 V
Timing characteristics:	GE IAV Inverse (Curve multiplier 0.00 to 600.00 in steps of 0.01 s) Definite Time (Time delay = 0.00 to 600.00 in steps of 0.01 s)
Curve timing accuracy at <0.90 x pickup:	±3.5% of operate time or ±1/2 cycle (whichever is greater) from pickup to operate
Operate time:	<30 ms at 0.9 pickup at 60 Hz for Definite Time mode

BANK OVERVOLTAGE

Operation:	per phase, 3 stages of definite-time, 1 stage of inverse-time
Application:	grounded and ungrounded banks
Number of elements:	1 per VT bank, maximum of 3
Pickup threshold:	0.800 to 2.000 pu of bus voltage in steps of 0.001, per phase
Pickup level accuracy:	0.002 pu for operating voltage <70 V
Hysteresis:	0.02 pu
Timing characteristics:	Stage 1 to Stage 3: Definite time (Time delay = 0.00 to 600.00 in steps of 0.01 s) Stage 4: any user-programmable FlexCurve (Stage 4)
Timer accuracy:	±3% of operate time or ±35 ms, whichever is greater
Operate time:	<35 ms at 60 Hz

PHASE OVERVOLTAGE

Voltage:	Phasor only
Pickup level:	0.004 to 3.000 pu in steps of 0.001
Dropout level:	98% of pickup
Level accuracy:	±0.5% of reading from 10 to 208 V
Pickup delay:	0.00 to 600.00 in steps of 0.01 s
Operate time:	<30 ms at 1.10 × pickup at 60 Hz
Timer accuracy:	±3% of operate time or ±1/4 cycle (whichever is greater)

NEUTRAL OVERVOLTAGE

Pickup level:	0.004 to 3.000 pu in steps of 0.001
Dropout level:	97% of pickup
Level accuracy:	±0.5% of reading from 10 to 208 V
Pickup delay:	0.00 to 600.00 s in steps of 0.01 (definite time) or user-defined curve
Reset delay:	0.00 to 600.00 s in steps of 0.01
Curve timing accuracy at >1.1 pickup:	±3.5% of operate time or ±1 cycle (whichever is greater) from pickup to operate
Operate time:	<30 ms at 1.10 pickup at 60 Hz

2

AUXILIARY OVERVOLTAGE

Pickup level:	0.004 to 3.000 pu in steps of 0.001
Dropout level:	97% of pickup
Level accuracy:	±0.5% of reading from 10 to 208 V
Pickup delay:	0 to 600.00 s in steps of 0.01
Reset delay:	0 to 600.00 s in steps of 0.01
Timer accuracy:	±3% of operate time or ±1/4 cycle (whichever is greater)
Operate time:	<30 ms at 1.10 × pickup at 60 Hz

NEGATIVE SEQUENCE OVERVOLTAGE

Pickup level:	0.004 to 1.250 pu in steps of 0.001
Dropout level:	97% of pickup
Level accuracy:	±0.5% of reading from 10 to 208 V
Pickup delay:	0 to 600.00 s in steps of 0.01
Reset delay:	0 to 600.00 s in steps of 0.01
Timer accuracy:	±3% of operate time or ±20 ms, whichever is greater
Operate time:	<30 ms at 1.10 × pickup at 60 Hz

BREAKER FAILURE

Mode:	1-pole, 3-pole
Current supervision:	phase, neutral current
Current supv. pickup:	0.020 to 30.000 pu in steps of 0.001
Current supv. dropout:	97% of pickup
Current supv. accuracy:	
0.1 to 2.0 × CT rating:	±0.75% of reading or ±2% of rated (whichever is greater)
above 2 × CT rating:	±2.5% of reading

BREAKER ARCING CURRENT

Principle:	accumulates breaker duty (I^2t) and measures fault duration
Initiation:	programmable per phase from any FlexLogic operand
Compensation for auxiliary relays:	0 to 65.535 s in steps of 0.001
Alarm threshold:	0 to 50000 kA^2-cycle in steps of 1
Fault duration accuracy:	0.25 of a power cycle
Availability:	1 per CT bank with a minimum of 2

BREAKER FLASHOVER

Operating quantity:	phase current, voltage, and voltage difference
Pickup level voltage:	0.004 to 1.500 pu in steps of 0.001
Dropout level voltage:	97% of pickup
Pickup level current:	0.020 to 1.500 pu in steps of 0.001
Dropout level current:	97% of pickup
Level accuracy:	±0.5% or ±0.1% of rated, whichever is greater
Pickup delay:	0 to 65.535 s in steps of 0.001
Timer accuracy:	±3% of operate time or ±42 ms, whichever is greater
Operate time:	<42 ms at 1.10 × pickup at 60 Hz (see NOTE 1)

BREAKER RESTRIKE

Principle:	detection of high-frequency overcurrent condition ¼ cycle after breaker opens
Availability:	one per digital signal processor (DSP)
Pickup level:	0.1 to 2.00 pu in steps of 0.01
Reset delay:	0.000 to 65.535 s in steps of 0.001

THERMAL OVERLOAD PROTECTION

Thermal overload curves:	IEC 255-8 curve
Base current:	0.20 to 3.00 pu in steps of 0.01
Overload (k) factor:	1.00 to 1.20 pu in steps of 0.05

Trip time constant:	0 to 1000 min. in steps of 1
Reset time constant:	0 to 1000 min. in steps of 1
Minimum reset time:	0 to 1000 min. in steps of 1
Timer accuracy (cold curve):	±100 ms or 2%, whichever is greater
Timer accuracy (hot curve):	±500 ms or 2%, whichever is greater for $I_p < 0.9 \times k \times I_b$ and $I / (k \times I_b) > 1.1$

TRIP BUS (TRIP WITHOUT FLEXLOGIC)

Number of elements:	6
Number of inputs:	16
Operate time:	<2 ms at 60 Hz
Timer accuracy:	±3% or 10 ms, whichever is greater

2.5.2 User-programmable elements

FLEXLOGIC

Programming language:	Reverse Polish Notation with graphical visualization (keypad programmable)
Lines of code:	1024
Internal variables:	64
Supported operations:	NOT, XOR, OR (2 to 16 inputs), AND (2 to 16 inputs), NOR (2 to 16 inputs), NAND (2 to 16 inputs), latch (reset-dominant), edge detectors, timers
Inputs:	any logical variable, contact, or virtual input
Number of timers:	64
Pickup delay:	0 to 60000 (ms, sec., min.) in steps of 1
Dropout delay:	0 to 60000 (ms, sec., min.) in steps of 1
Timer accuracy:	±0.1% of operate time or ±1/8 cycle, whichever is greater

FLEXCURVES™

Number:	4 (A through D)
Reset points:	40 (0 through 1 of pickup)
Operate points:	80 (1 through 20 of pickup)
Time delay:	0 to 65535 ms in steps of 1

FLEX STATES

Number:	up to 256 logical variables grouped under 16 Modbus addresses
Programmability:	any logical variable, contact, or virtual input

FLEXELEMENTS™

Number of elements:	16
Operating signal:	any analog actual value, or two values in differential mode
Operating signal mode:	signed or absolute value
Operating mode:	level, delta
Comparator direction:	over, under
Pickup level:	–90.000 to 90.000 pu in steps of 0.001
Hysteresis:	0.1 to 50.0% in steps of 0.1
Delta dt:	20 ms to 60 days
Pickup and dropout delay:	0.000 to 65.535 s in steps of 0.001

NON-VOLATILE LATCHES

Type:	set-dominant or reset-dominant
Number:	16 (individually programmed)
Output:	stored in non-volatile memory
Execution sequence:	as input prior to protection, control, and FlexLogic

USER-PROGRAMMABLE LEDs (Enhanced and basic front panels)

Number:	48 plus trip and alarm
Programmability:	from any logical variable, contact, or virtual input

2

Reset mode:	self-reset or latched

LED TEST

Initiation:	from any contact input or user-programmable condition
Number of tests:	3, interruptible at any time
Duration of full test:	approximately 3 minutes
Test sequence 1:	all LEDs on
Test sequence 2:	all LEDs off, one LED at a time on for 1 s
Test sequence 3:	all LEDs on, one LED at a time off for 1 s

USER-DEFINABLE DISPLAYS (Enhanced and basic front panels)

Number of displays:	16
Lines of display:	2 × 20 alphanumeric characters
Parameters:	up to 5, any Modbus register addresses
Invoking and scrolling:	keypad, or any user-programmable condition, including pushbuttons

CONTROL PUSHBUTTONS (Enhanced and basic front panels)

Number of pushbuttons:	7
Operation:	drive FlexLogic operands

USER-PROGRAMMABLE PUSHBUTTONS

Number of pushbuttons:	12 on basic front panel 16 on enhanced horizontal front panel 6 on enhanced vertical front panel 16 on graphical front panel (8 physical pushbuttons, 8 graphical interface pushbuttons)
Mode:	self-reset, latched
Display message:	2 lines of 20 characters each
Drop-out timer:	0.00 to 60.00 s in steps of 0.05
Autoreset timer:	0.2 to 600.0 s in steps of 0.1
Hold timer:	0.0 to 10.0 s in steps of 0.1

SELECTOR SWITCH

Number of elements:	2
Upper position limit:	1 to 7 in steps of 1
Selecting mode:	time-out or acknowledge
Time-out timer:	3.0 to 60.0 s in steps of 0.1
Control inputs:	step-up and 3-bit
Power-up mode:	restore from non-volatile memory or synchronize to a 3-bit control input or synch/restore mode

TIME OF DAY TIMERS

Number of timers:	5
Setting resolution:	1 minute

DIGITAL ELEMENTS

Number of elements:	96
Operating signal:	any FlexLogic operand
Pickup delay:	0.000 to 999999.999 s in steps of 0.001
Dropout delay:	0.000 to 999999.999 s in steps of 0.001
Timing accuracy:	±3% or ±4 ms, whichever is greater

2.5.3 Monitoring

OSCILLOGRAPHY

Number of records:	3 to 64, configurable
Sampling rate:	8, 16, 32, or 64 samples per power cycle, configurable
Triggers:	any FlexLogic operand, configurable
Trigger position:	0 to 100%, configurable
Recorded data:	raw AC input channels

	up to 64 configured digital channels, representing any FlexLogic operand
	up to 16 configured analog channels, representing any measured analog value
Data storage:	in non-volatile memory
Format:	COMTRADE IEEE C37.111 (1999 or 2013)

EVENT RECORDER

Capacity:	1024 events
Time-tag:	to 1 microsecond
Triggers:	any FlexLogic operand, configurable
Data storage:	in non-volatile memory

USER-PROGRAMMABLE FAULT REPORT

Number of elements:	2
Pre-fault trigger:	any FlexLogic operand
Fault trigger:	any FlexLogic operand
Recorder quantities:	32 (any FlexAnalog™ value)

DATA LOGGER

Number of channels:	1 to 16
Parameters:	any available analog actual value
Sampling rate:	15 to 3600000 ms in steps of 1
Trigger:	any FlexLogic operand
Mode:	continuous or triggered
Storage capacity:	(NN is dependent on memory)
	1-second rate:
	01 channel for NN days
	16 channels for NN days
	↓
	60-minute rate:
	01 channel for NN days
	16 channels for NN days

2.5.4 Metering

RMS CURRENT: PHASE, NEUTRAL, AND GROUND

Accuracy at	
0.1 to 2.0 × CT rating:	±0.25% of reading or ±0.1% of rated (whichever is greater)
> 2.0 × CT rating:	±1.0% of reading

RMS VOLTAGE

Accuracy:	±0.5% of reading from 10 to 208 V

REAL POWER (WATTS)

Accuracy at 0.1 to 1.5 x CT rating and 0.8 to 1.2 x VT rating:

±1.0% of reading at $-1.0 \le PF < -0.8$ and $0.8 < PF \le 10$

REACTIVE POWER (VARS)

Accuracy at 0.1 to 1.5 x CT rating and 0.8 to 1.2 x VT rating:

±1.0% of reading at $-0.2 \le PF \le 0.2$

APPARENT POWER (VA)

Accuracy at 0.1 to 1.5 x CT rating and 0.8 to 1.2 x VT rating:

±1.0% of reading

CURRENT HARMONICS

Harmonics:	2nd to 25th harmonic: per phase, displayed as a % of $I(f_1)$ (current fundamental frequency phasor)

2

	THD: per phase, displayed as a % of $I(f_1)$
Accuracy:	
HARMONICS:	with $I(f_1)$ 0.4 to 2.0 × CT rating: ±2% of reading or ±1% of 100%, whichever is greater
THD:	with $I(f_1)$ from 0.4 to 2.0 × CT rating: ±2% of reading or ±1% of 100% per each harmonic, whichever is greater
Accuracy applies to:	2nd to 25th harmonic including THD with a regular CT/VT module 2nd to 10th harmonic including THD with a Process Bus Module (order code 85, 86, 87) when anti-aliasing filter is enabled 2nd to 16th harmonic including THD with a Process Bus Module (order code 85, 86, 87) when anti-aliasing filter is disabled 2nd to 15th harmonic including THD with a HardFiber Process Bus Module (order code 81)

VOLTAGE HARMONICS

Harmonics:	2nd to 25th harmonic: per phase, displayed as a % of $V(f_1)$ (voltage fundamental frequency phasor) THD: per phase, displayed as a % of $V(f_1)$
Accuracy:	
HARMONICS:	with $V(f_1)$ 25 to 208 V: ±2% of reading or ±1% of 100%, whichever is greater
THD:	with $V(f_1)$ 25 to 208 V: ±2% of reading or ±1% of 100% per each harmonic, whichever is greater
Accuracy applies to:	2nd to 25th harmonic including THD with a regular CT/VT module 2nd to 10th harmonic including THD with a Process Bus Module (order code 85, 86, 87) when anti-aliasing filter is enabled 2nd to 16th harmonic including THD with a Process Bus Module (order code 85, 86, 87) when anti-aliasing filter is disabled 2nd to 15th harmonic including THD with a HardFiber Process Bus Module (order code 81)

FREQUENCY

Accuracy for 20 to 65 Hz input at	
V = 0.8 to 1.2 pu:	±0.001 Hz (when voltage signal is used for frequency measurement)
I = 0.1 to 0.25 pu:	±0.02 Hz (when current signal is used for frequency measurement)
I > 0.25 pu:	±0.005 Hz (when current signal is used for frequency measurement)

2.5.5 Inputs

AC CURRENT

CT rated primary:	1 to 50000 A
CT rated secondary:	1 or 5 A by connection
Relay burden:	< 0.2 VA at rated secondary
Conversion range:	
Standard CT:	0.02 to 46 × CT rating RMS symmetrical
Current withstand:	20 ms at 250 times rated 1 sec at 100 times rated continuous 4xInom
Short circuit rating:	150000 RMS symmetrical amperes, 250 V maximum (primary current to external CT)

AC VOLTAGE

VT rated secondary:	25.0 to 240.0 V
VT ratio:	1.00 to 24000.00
Relay burden:	< 0.25 VA at 120 V
Conversion range:	1 to 275 V
Voltage withstand:	continuous at 260 V to neutral 1 min/hr at 420 V to neutral

FREQUENCY

Nominal frequency setting:	25 to 60 Hz
Sampling frequency:	64 samples per power cycle
Tracking frequency range with DSP:	20 to 70 Hz

with Process Bus Module 81, 85, 86, 87: 20 to 65 Hz

CONTACT INPUTS

Dry contacts:	1000 Ω maximum
Wet contacts:	300 V DC maximum
Selectable thresholds:	17 V, 33 V, 84 V, 166 V
Tolerance:	±10%
Contacts per common return:	4
Recognition time:	< 1 ms
Debounce time:	0.0 to 16.0 ms in steps of 0.5
Continuous current draw:	4 mA (when energized)

CONTACT INPUTS WITH AUTO-BURNISHING

Dry contacts:	1000 Ω maximum
Wet contacts:	300 V DC maximum
Selectable thresholds:	17 V, 33 V, 84 V, 166 V
Tolerance:	±10%
Contacts per common return:	2
Recognition time:	< 1 ms
Debounce time:	0.0 to 16.0 ms in steps of 0.5
Continuous current draw:	4 mA (when energized)
Auto-burnish impulse current:	50 to 70 mA
Duration of auto-burnish impulse:	25 to 50 ms

DCMA INPUTS

Current input (mA DC):	0 to –1, 0 to +1, –1 to +1, 0 to 5, 0 to 10, 0 to 20, 4 to 20 (programmable)
Input impedance:	379 Ω ±10%
Conversion range:	–1 to + 20 mA DC
Accuracy:	±0.2% of full scale
Type:	Passive

IRIG-B INPUT

IRIG formats accepted:	B000...B007, B120...B127
IRIG control bits:	IEEE Std C37.118.1-2011
Amplitude modulation:	1 to 10 V pk-pk
DC shift:	TTL–Compatible
Input impedance:	50 kΩ
Isolation:	2 kV

DIRECT INPUTS

Input points:	32
Remote devices:	16
Default states on loss of comms.:	On, Off, Latest/Off, Latest/On
Ring configuration:	Yes, No
Data rate:	64 or 128 kbps
CRC:	32-bit
CRC alarm:	
Responding to:	Rate of messages failing the CRC
Monitoring message count:	10 to 10000 in steps of 1
Alarm threshold:	1 to 1000 in steps of 1
Unreturned message alarm:	
Responding to:	Rate of unreturned messages in the ring configuration
Monitoring message count:	10 to 10000 in steps of 1
Alarm threshold:	1 to 1000 in steps of 1

TELEPROTECTION

Input points:	16
Remote devices:	3

Default states on loss of comms.: On, Off, Latest/Off, Latest/On
Ring configuration: No
Data rate: 64 or 128 kbps
CRC: 32-bit

2.5.6 Power supply

2

LOW RANGE

Nominal DC voltage: 24 to 48 V
Minimum DC voltage: 20 V
Maximum DC voltage: 75 V for SL power supply module
Voltage loss hold-up: 200 ms duration at maximum load
NOTE: Low range is DC only.

HIGH RANGE

Nominal DC voltage: 125 to 250 V
Minimum DC voltage: 88 V
Maximum DC voltage: 300 V
Nominal AC voltage: 100 to 240 V at 50/60 Hz
Minimum AC voltage: 88 V at 25 to 100 Hz
Maximum AC voltage: 265 V at 25 to 100 Hz
Voltage loss hold-up: 200 ms duration at maximum load

ALL RANGES

Volt withstand: 2 × Highest Nominal Voltage for 10 ms
Power consumption: typical = 15 to 20 W/VA
maximum = 45 W/VA
contact factory for exact order code consumption

INTERNAL FUSE

Ratings:
Low range power supply: 8 A / 250 V
High range power supply: 4 A / 250 V
Interrupting capacity:
AC: 100 000 A RMS symmetrical
DC: 10 000 A

2.5.7 Outputs

FORM-A RELAY

Make and carry for 0.2 s: 30 A as per ANSI C37.90
Carry continuous: 6 A
Break (DC inductive, L/R = 40 ms):

Voltage	Current
24 V	1 A
48 V	0.5 A
125 V	0.3 A
250 V	0.2 A

Operate time: < 4 ms
Contact material: silver alloy

LATCHING RELAY

Make and carry for 0.2 s: 30 A as per ANSI C37.90
Carry continuous: 6 A as per IEEE C37.90

Break (DC resistive as per IEC 61810-1):

Voltage	Current
24 V	6 A
48 V	1.6 A
125 V	0.4 A
250 V	0.2 A

Operate time: < 4 ms
Contact material: silver alloy
Control: separate operate and reset inputs
Control mode: operate-dominant or reset-dominant

FORM-A VOLTAGE MONITOR

Applicable voltage: approx. 15 to 250 V DC
Trickle current: approx. 1 to 2.5 mA

FORM-A CURRENT MONITOR

Threshold current: approx. 80 to 100 mA

FORM-C AND CRITICAL FAILURE RELAY

Make and carry for 0.2 s: 30 A as per ANSI C37.90
Carry continuous: 8 A
Break (DC inductive, L/R = 40 ms):

Voltage	Current
24 V	1 A
48 V	0.5 A
125 V	0.3 A
250 V	0.2 A

Operate time: < 8 ms
Contact material: silver alloy

FAST FORM-C RELAY

Make and carry: 0.1 A max. (resistive load)
Minimum load impedance:

Input voltage	Impedance	
	2 W Resistor	1 W Resistor
250 V DC	20 KΩ	50 KΩ
120 V DC	5 KΩ	2 KΩ
48 V DC	2 KΩ	2 KΩ
24 V DC	2 KΩ	2 KΩ

Note: values for 24 V and 48 V are the same due to a required 95% voltage drop across the load impedance.

Operate time: < 0.6 ms
Internal Limiting Resistor: 100 Ω, 2 W

SOLID-STATE OUTPUT RELAY

Operate and release time: <100 µs
Maximum voltage: 265 V DC
Maximum leakage current in off state
(excluding voltage monitor circuit current): 100 µA
Maximum continuous current: 5 A at 45°C; 4 A at 65°C
Make and carry:

2

for 0.2 s: 30 A as per ANSI C37.90
for 0.03 s: 300 A
Breaking capacity:

Specification	UL 508	Utility application (autoreclose scheme)	Industrial application
Operations per interval	5000 operations, 1 second on, 9 seconds off	5 operations, 0.2 seconds on, 0.2 seconds off, within 1 minute	10000 operations, 0.2 seconds on, 30 seconds off
	1000 operations, 0.5 seconds on, 0.5 seconds off		
Break capability (0 to 250 V DC)	3.2 A at L/R = 10 ms	10 A at L/R = 40 ms	10 A at L/R = 40 ms
	1.6 A at L/R = 20 ms		
	0.8 A L/R = 40 ms		

CONTROL POWER EXTERNAL OUTPUT (For dry contact input)
Capacity: 100 mA DC at 48 V DC
Isolation: ±300 Vpk

DIRECT OUTPUTS
Output points: 32

DCMA OUTPUTS
Range: –1 to 1 mA, 0 to 1 mA, 4 to 20 mA
Max. load resistance: 12 kΩ for –1 to 1 mA range
12 kΩ for 0 to 1 mA range
600 Ω for 4 to 20 mA range
Accuracy: ±0.75% of full-scale for 0 to 1 mA range
±0.5% of full-scale for –1 to 1 mA range
±0.75% of full-scale for 0 to 20 mA range
99% Settling time to a step change: 100 ms
Isolation: 1.5 kV
Driving signal: any FlexAnalog quantity
Upper and lower limit for the driving signal: –90 to 90 pu in steps of 0.001

2.5.8 Communications

IEC 61850
IEC 61850: Supports IEC 61850 Editions 1.0 and 2.0. See the UR Family Communications Guide and its conformance statements.

RS232 (Enhanced and basic front panels)
Front port: 19.2 kbps, Modbus RTU

USB (Graphical front panel)
Front port: USB 2.0 type B

RS485
1 rear port: up to 115 kbps, Modbus RTU, DNP 3, IEC 60870-5-103
Typical distance: 1200 m
Isolation: 2 kV, isolated together at 36 Vpk

FIBER ETHERNET PORT

Parameter	Fiber type
	100 Mb multimode
Wavelength	1310 nm
Connector	LC
Transmit power	–20 dBm
Receiver sensitivity	–30 dBm
Power budget	10 dB
Maximum input power	–14 dBm
Typical distance	2 km
Full duplex	yes
Redundancy	yes

ETHERNET (10/100 MB TWISTED PAIR)

Modes: 10 Mb, 10/100 Mb (auto-detect)
Connector: RJ45

SIMPLE NETWORK TIME PROTOCOL (SNTP)

Clock synchronization error: <10 ms (typical)

PRECISION TIME PROTOCOL (PTP)

PTP IEEE Std 1588-2008 (version 2)
Power Profile (PP) per IEEE Standard PC37.238-2017
Clock: Slave-only ordinary clock when using station bus Ethernet interface
Boundary clock when using process bus Ethernet interface
Peer delay measurement mechanism

PARALLEL REDUNDANCY PROTOCOL (PRP) (IEC 62439-3 CLAUSE 4, 2012)

Ethernet ports used: 2 and 3
Networks supported: 10/100 Mb Ethernet

PROCESS BUS MODULE (NON-HARDFIBER)

Ethernet ports: 2 x 1000Base-SX, 1 Gbps LC connectors,
4 x 1000Base-SX (1 Gbps) + 4 x 100Base-FX (100 Mbps) LC connectors, or
4 x 100Base-FX, LC connectors
Number of sampled value (SV) streams: Up to 8
SV subscription profiles: IEC 61850-9-2LE (1 ASDU only) or IEC 61869-9 (1 or 2 ASDUs)
Sampling Rate:
IEC 61850-9-2: 4800 Hz (80 samples/cycle) fixed for 60 Hz - Protection class
4000 Hz (80 samples/cycle) fixed for 50 Hz - Protection class
IEC 61869-9: 4800 Hz for 60/50 Hz - Protection class
GOOSE support: P1 class 1 TxGOOSE, and 8 RxGOOSE
Network Config modes: IEC 62439-3:2012 PRP (ports 1 and2); IEC 62439-3:2012 HSR (ports 1 and 2); IEC 62439-3:2012 Dual HSR (ports 1 and 2, 5 and 6); or Point-to-Point (ports 1 to 8)
Time synchronization: IEC 61850-9-3 PTPv2 Utility profile; PTPv2/PP (IEEE C37.238-2017 over Process Bus Module; PTPv2/PP (IEEE C37.238-2017; or IGIB-B over CPU for PTP master
Time synchronization mode: Slave-only, master-slave on Process Bus Module, and slave-only on CPU
Simulation mode: Supported for both GOOSE and SV
Test mode (test, test/block): Supported for both GOOSE and SV

OTHER

TFTP, SFTP, HTTP, IEC 60870-5-104, Ethernet Global Data (EGD), IEEE C37.118

2.5.9 Inter-relay communications

SHIELDED TWISTED-PAIR INTERFACE OPTIONS

Interface type	Typical distance
RS422	1200 m
G.703	100 m

NOTE

RS422 distance is based on transmitter power and does not take into consideration the clock source provided by the user.

LINK POWER BUDGET AND MAXIMUM OPTICAL INPUT POWER

The following specifications apply to filter interface modules manufactured from January 2012.

Emitter, fiber type	Cable type	Transmit power	Received sensitivity	Power budget	Maximum optical input power
820 nm, Multimode	62.5/125 µm	-16 dBm	-32 dBm	16 dBm	-8 dBm
	50/125 µm	-20 dBm		12 dBm	
1300 nm, Multimode	62.5/125 µm	-16 dBm	-32 dBm	16 dBm	-8 dBm
	50/125 µm	-20 dBm		12 dBm	
1300 nm, Single mode		-15 dBm	-32 dBm	17 dBm	-8 dBm
1300 nm Laser, Single mode		0 dBm	-34 dBm	34 dBm	-8 dBm
1550 nm Laser, Single mode		5 dBm	-34 dBm	39 dBm	-10 dBm

The following specifications apply to filter interface modules implemented before January 2012.

Emitter, fiber type	Transmit power	Received sensitivity	Power budget	Maximum optical input power
820 nm LED, Multimode	–20 dBm	–30 dBm	10 dB	–7.6 dBm
1300 nm LED, Multimode	–21 dBm	–30 dBm	9 dB	–11 dBm
1300 nm ELED, Single mode	–23 dBm	–32 dBm	9 dB	–14 dBm
1300 nm Laser, Single mode	–1 dBm	–30 dBm	29 dB	–14 dBm
1550 nm Laser, Single mode	+5 dBm	–30 dBm	35 dB	–14 dBm

NOTE

The power budgets are calculated from the manufacturer's worst-case transmitter power and worst case receiver sensitivity.

The power budgets for the 1300 nm ELED are calculated from the manufacturer's transmitter power and receiver sensitivity at ambient temperature. At extreme temperatures these values deviate based on component tolerance. On average, the output power decreases as the temperature is increased by a factor of 1 dB / 5 °C.

TYPICAL LINK DISTANCE

Emitter, fiber type	Cable type	Connector type	Typical distance	
			Before January 2012	From January 2012
820 nm LED, multimode	62.5/125 µm	ST	1.65 km	2 km
	50/125 µm	ST	1.65 km	2 km
1300 nm LED, multimode	62.5/125 µm	ST	4 km	5 km
	50/125 µm	ST	4 km	5 km

NOTE

Typical distances listed are based on the following assumptions for system loss. As actual losses vary from one installation to another, the distance covered by your system can vary.

CONNECTOR LOSSES (Total of both ends)

ST connector: 0.7 dB (each)

FIBER LOSSES

820 nm multimode: 3 dB/km
1300 nm multimode: 1 dB/km
1300 nm single mode: 0.35 dB/km
Splice losses: one splice every 2 km at 0.05 dB loss per splice

SYSTEM MARGIN

3 dB additional loss added to calculations to compensate for all other losses.

Compensated difference in transmitting and receiving (channel asymmetry) channel delays using GPS satellite clock: 10 ms

2.5.10 CyberSentry security

OPTIONS

Software options: Level 1

2.5.11 Graphical front panel

DISPLAY

Type: color graphical back-lit LCD display
Size: 7 inches (17.8 cm)
Resolution: 800 by 480 pixels
Pages: 5 single-line diagram pages with controls, status, and metering values
up to 8 annunciator pages with total of 96 annunciator windows
1 phasor metering page for each AC Source
5 tabular metering pages with dynamic metering and status
event records page with dynamic update
product information page
settings, actual values, error messages (targets)

LED INDICATORS

Functions: 5 device status indicators
9 event cause indicators
8 user-programmable pushbutton indicators

PUSHBUTTONS

Type: membrane

Functions:	5 bottom Tab pushbuttons and 1 Home pushbutton for page recall 4 directional, 1 ENTER, and 1 ESCAPE pushbutton element selection 10 side pushbuttons for power system element control RESET pushbutton

INGRESS PROTECTION

IP code:	IP54 front, IP10 back (IP20 back with IP20 cover accessory)

2

2.5.12 Environmental

AMBIENT TEMPERATURES

Maximum operating range:	–40 to 85°C
Continuous operating range:	–40 to 60°C[1]

1 Based on IEC 60068-2-1 and IEC 60068-2-2, Variant Bd and Ad for 16 hrs. The UR can operate up to a surrounding ambient of 85°C, however operating outside the recommended continuous temperature range for extended periods can result in MTBF degradation and decrease the response time of the LCD.

HUMIDITY

Humidity:	operating up to 95% (non-condensing) at 55°C (as per IEC60068-2-30 variant 1, 6 days)

OTHER

Altitude:	2000 m (maximum)
Pollution degree:	II
Overvoltage category:	II
Ingress protection:	IP20 front, IP10 back (basic front panel and Rev. 1 enhanced front panel) IP40 front, IP10 back (Rev. 2 enhanced front panel) IP54 front with IP54 mounting collar accessory (Rev. 2 enhanced front panel)
Ingress protection with IP20 cover accessory:	IP20 back
Noise:	0 dB

2.5.13 Type tests

C70 TYPE TESTS

Test	Reference standard	Test level
Dielectric voltage withstand	EN 60255-5[1]	2.2 kV
Impulse voltage withstand	EN 60255-5[1]	5 kV
Damped oscillatory	IEC 61000-4-18 / IEC 60255-22-1	2.5 kV CM, 1 kV DM
Electrostatic discharge	EN 61000-4-2 / IEC 60255-22-2	Level 3
RF immunity	EN 61000-4-3 / IEC 60255-22-3	Level 3
Fast transient disturbance	EN 61000-4-4 / IEC 60255-22-4	Class A and B
Surge immunity	EN 61000-4-5 / IEC 60255-22-5	Level 3 and 4
Conducted RF immunity	EN 61000-4-6 / IEC 60255-22-6	Level 3
Power frequency immunity	EN 61000-4-7[1] / IEC 60255-22-7	Class A and B
Voltage interruption and ripple DC	IEC 60255-11	12% ripple, 200 ms interrupts
Radiated and conducted emissions	CISPR11 / CISPR22 / IEC 60255-25	Class A
Sinusoidal vibration	IEC 60255-21-1	Class 1
Shock and bump	IEC 60255-21-2	Class 1
Seismic	IEC 60255-21-3	Class 1
Power magnetic immunity	IEC 61000-4-8	Level 5
Pulse magnetic immunity	IEC 61000-4-9	Level 4
Damped magnetic immunity	IEC 61000-4-10	Level 4
Voltage dip and interruption	IEC 61000-4-11	0, 40, 70, 80% dips; 250 / 300 cycle interrupts
Damped oscillatory	IEC 61000-4-12[1]	2.5 kV CM, 1 kV DM
Conducted RF immunity, 0 to 150 kHz	IEC 61000-4-16	Level 4
Voltage ripple	IEC 61000-4-17	15% ripple
Ingress protection	IEC 60529[1]	IP20 front, IP10 back
Cold	IEC 60068-2-1	–40°C for 16 hours
Hot	IEC 60068-2-2	85°C for 16 hours
Humidity	IEC 60068-2-30	6 days, variant 1
Damped oscillatory	IEEE/ANSI C37.90.1	2.5 kV, 1 MHz
RF immunity	IEEE/ANSI C37.90.2	20 V/m, 80 MHz to 1 GHz
Safety	UL 508	e83849 NKCR
		Section 43 - Temperature test Energization of Contact Inputs and/or Contact Outputs for continuous duty is not to exceed a total of 31 W of power
Safety	UL C22.2-14	e83849 NKCR7
Safety	UL 1053	e83849 NKCR
Safety	IEC 60255-27	Insulation: class 1, Pollution degree: 2, Over voltage cat II

1 Not tested by third party.

2.5.14 Production tests

THERMAL

Products go through an environmental test based upon an Accepted Quality Level (AQL) sampling process.

2.5.15 Approvals

APPROVALS

Compliance	Applicable council directive	According to
CE	Low voltage directive	EN 60255-5
	EMC directive	EN 60255-26 / EN 50263
		EN 61000-6-5
C-UL-US	---	UL 508
		UL 1053
		C22.2 No. 14

2.5.16 Maintenance

MOUNTING

Attach mounting brackets using 20 inch-pounds (±2 inch-pounds) of torque.

CLEANING

Normally, cleaning is not required. When dust has accumulated on the front panel display, wipe with a dry cloth.

NOTICE To avoid deterioration of electrolytic capacitors, power up units that are stored in a de-energized state once per year, for one hour continuously.

C70 Capacitor Bank Protection and Control System

Chapter 3: Installation

This chapter outlines installation of hardware and software. You unpack, mount, wire the unit, turn on power, then install the software and configure settings.

3.1 Unpack and inspect

1. Open the relay package and check that the following items have been delivered:
   - C70
   - Mounting screws
   - GE EnerVista™ DVD (software and documentation)
   - C70 Instruction Manual (soft copy on DVD; printed copy if ordered)
   - UR Family Communications Guide (soft copy on DVD; printed copy if Instruction Manual ordered)
   - Certificate of Calibration
   - Test Report
   - EC Declaration of Conformity
   - Front panel label package
2. Inspect the unit for physical damage.
3. View the rear nameplate and verify that the correct model has been delivered. The model number is at the top right.

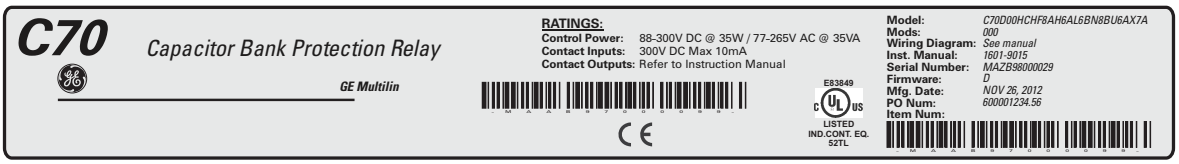

834726A3.CDR

4. Any protective plastic film on the front panel is normally peeled off, but also can be left on.
5. For any issues, contact GE as outlined in the For Further Assistance section in chapter 1.
6. Check that you have the latest copy of the C70 Instruction Manual and the UR Family Communications Guide, for the applicable firmware version, at http://www.gegridsolutions.com/multilin/manuals/index.htm

The Instruction Manual outlines how to install, configure, and use the unit. The Communications Guide is for advanced use with communication protocols. The warranty is included at the end of this instruction manual and on the GE Grid Solutions website.

3.2 Panel cutouts

This section does not apply to the HardFiber Brick; see its instruction manual.

Install the relay in an indoor environment within the environmental specifications. The relay complies with Pollution Category II, which means installation in an office, laboratory, or testing environment.

3.2.1 Horizontal units

The C70 is available as a 19-inch rack horizontal mount unit with a removable front panel. The front panel is specified as enhanced, basic, or graphical at the time of ordering. The enhanced and graphical front panels have additional user-programmable pushbuttons and LED indicators, while the basic front panel has additional user-programmable pushbuttons.

The modular design allows the relay to be upgraded and repaired by qualified service personnel. The front panel is hinged to allow access to the modules. The front panel is itself removable to allow mounting on doors with limited rear depth and for upgrading.

In November 2017, GE began transitioning to a new enhanced horizontal front panel, referred to as the IP54 Front Panel or Enhanced Front Panel Rev. 2. This panel can be identified by the use of a screw instead of a knob to close the panel. It can conform to an IP54 rating with the IP54 mounting collar purchased separately. The IP54 mounting collar can be used in panel-mount installations, not 19-inch rack-mount installations. The IP54 mounting collar cannot be used with Rev. 1 enhanced front panels.

The case dimensions are shown in the following figures, along with panel cutout details for panel mounting. When planning the location of your panel cutout, ensure that provision is made for the front panel to swing open without interference to or from adjacent equipment.

Mount the relay such that the front panel sits semi-flush with the panel or switchgear door, allowing the operator access to the keypad and the front communications port.

Figure 3-1: Horizontal dimensions (Rev. 1 enhanced front panel)

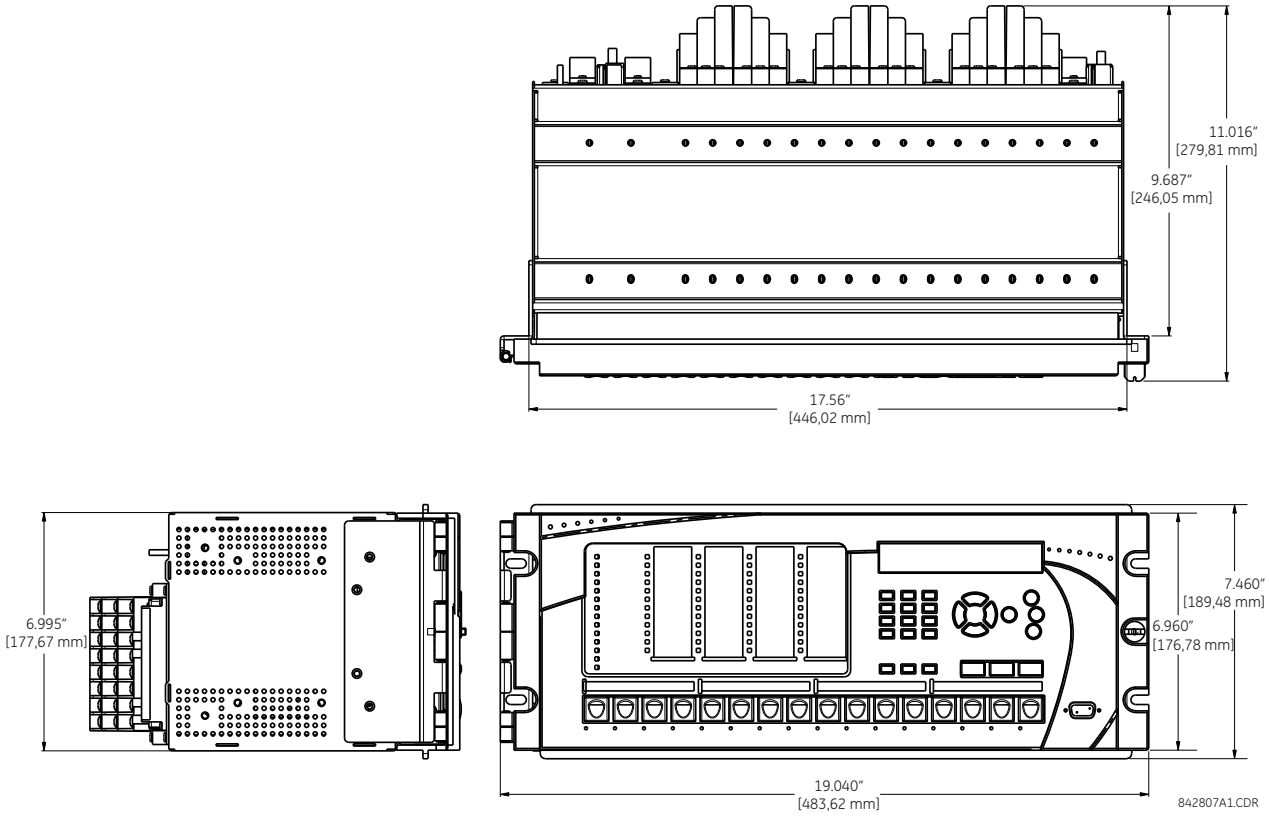

3

Figure 3-2: Horizontal dimensions (Rev. 2 enhanced front panel)

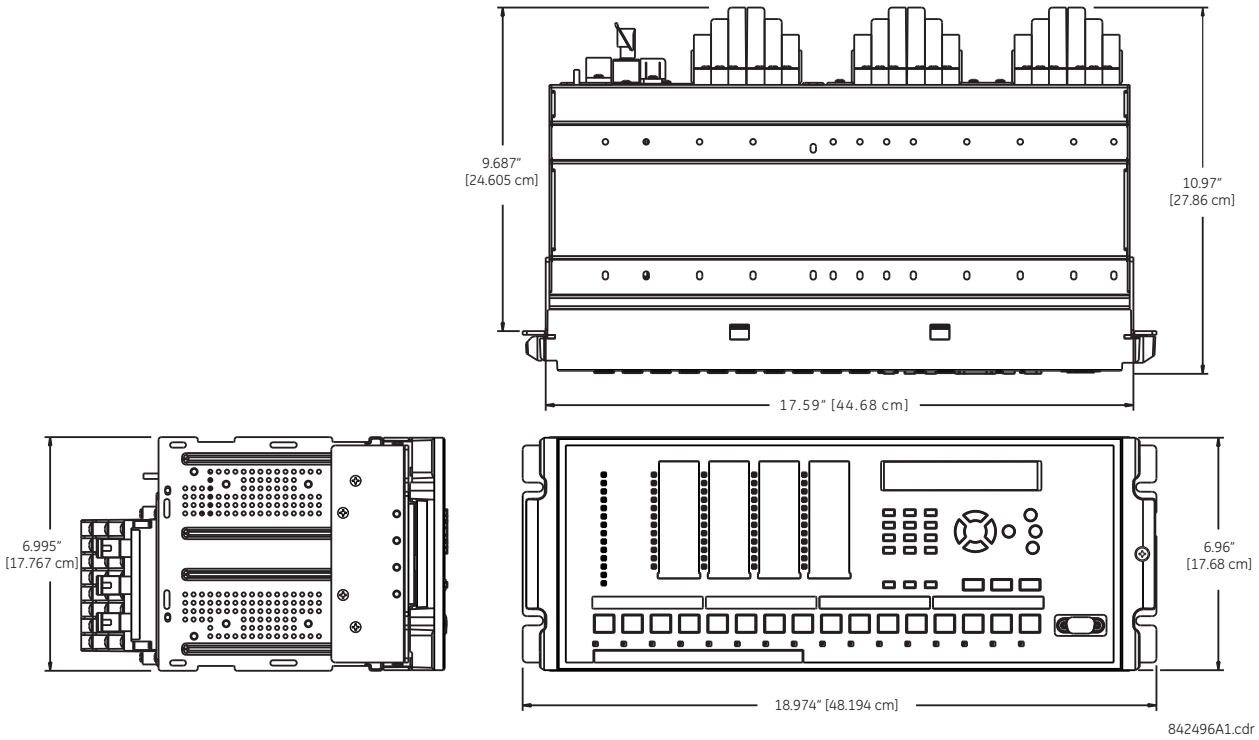

Figure 3-3: Horizontal mounting (enhanced and graphical front panels)

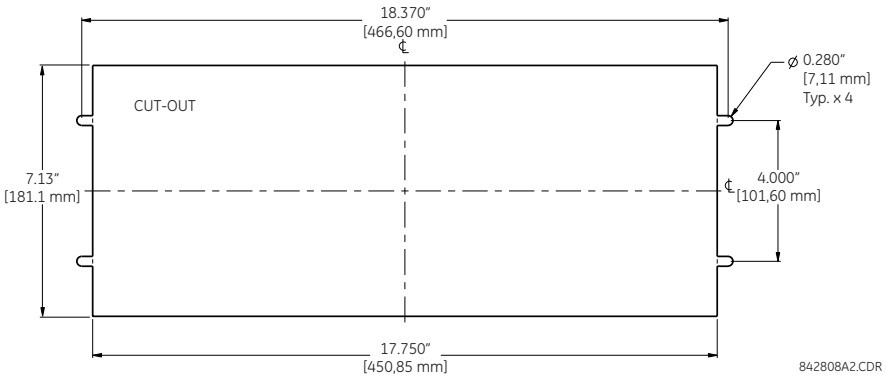

Figure 3-4: Horizontal dimensions and mounting (basic front panel)

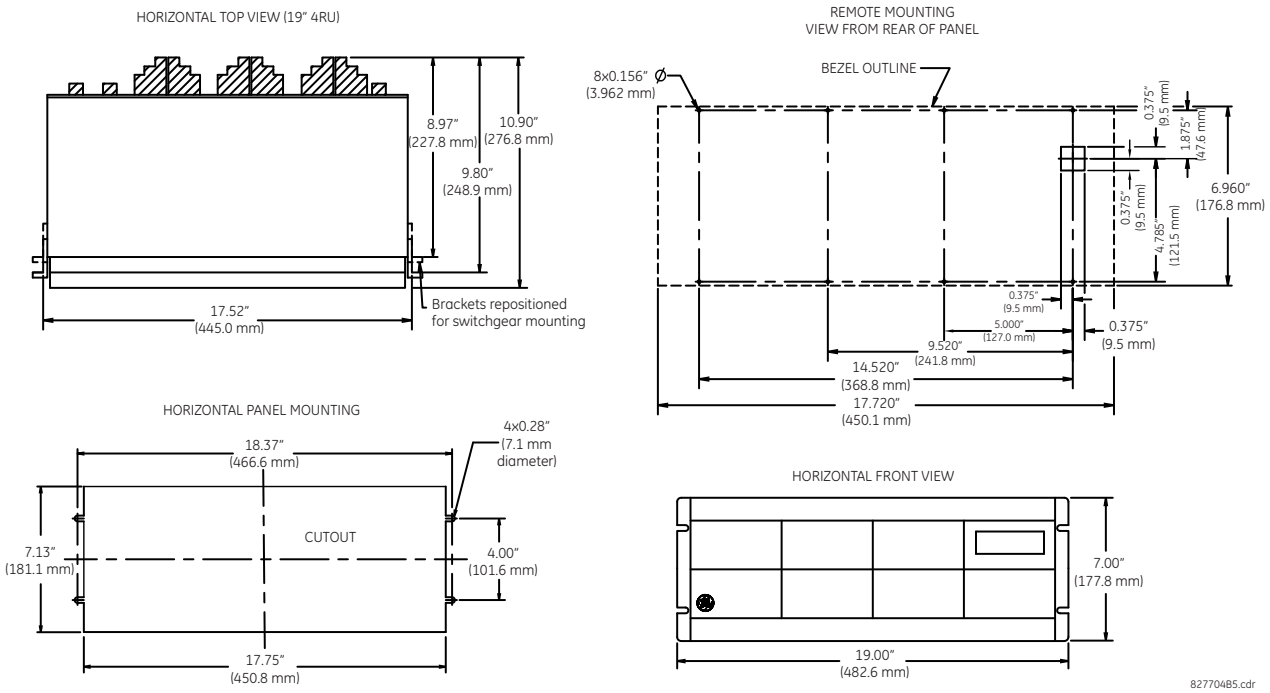

Figure 3-5: Horizontal dimensions (graphical front panel)

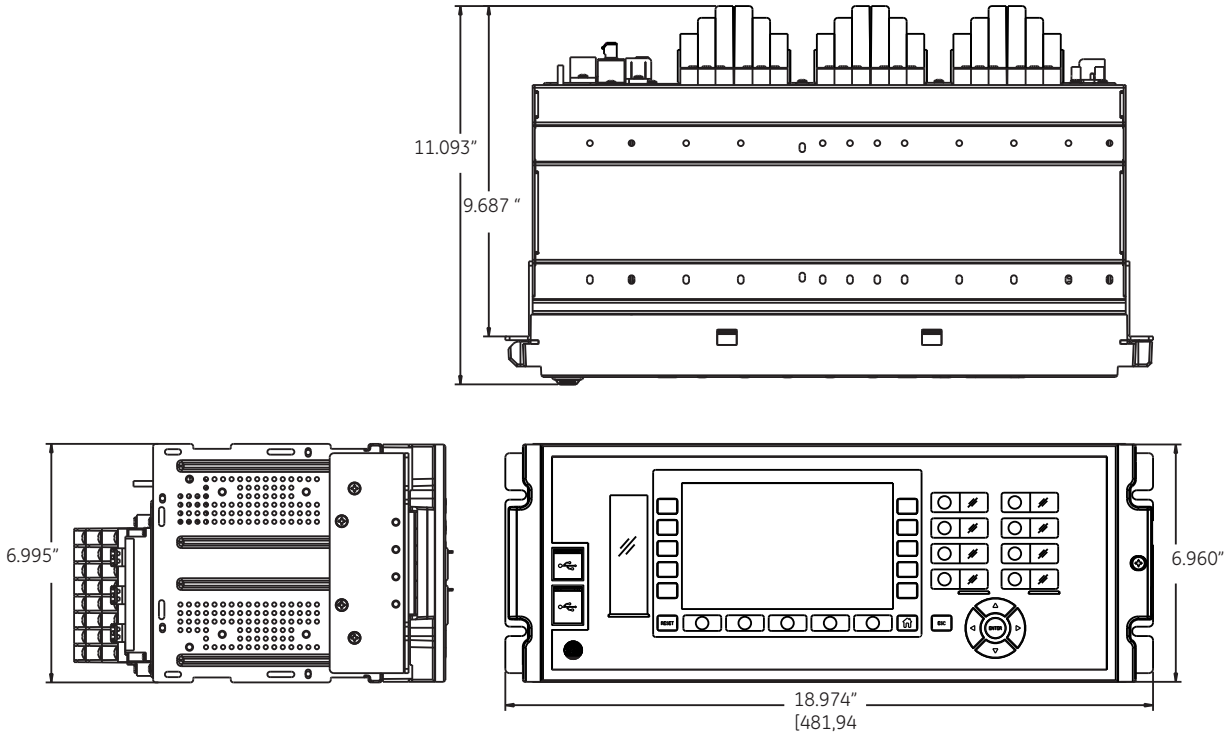

3

Figure 3-6: Horizontal dimensions (IP54 mounting collar)

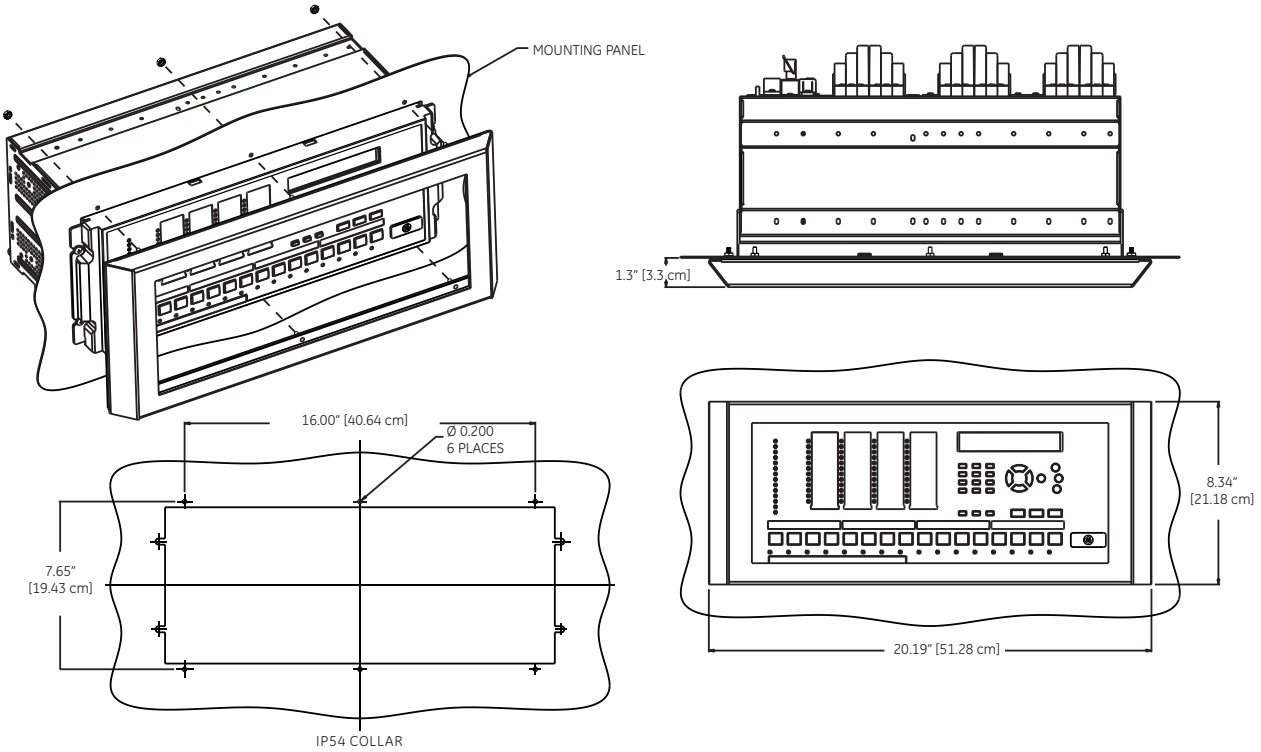

NOTES
1. INSPECT THE COLLAR BEFORE INSTALLATION, VERIFY GASKET IS ADHERED TO THE METAL ON ALL SIDES
2. MAKE SURE THE RELAY IS POSITIONED CENTER TO THE CUT OUT
3. INSTALL IP-54 COLLAR, CONFIRM THE GASKET PROPERLY MATES WITH THE PANEL ON ALL SIDES
SECURE USING #8-32 HEX NUT AT 6 PLACES.

842497A1.cdr

3.2.2 Vertical units

The C70 is available as a reduced size (¾) vertical mount unit, with a removable front panel. The front panel is specified as enhanced or basic at the time of ordering. The enhanced front panel contains additional user-programmable pushbuttons and LED indicators, while the basic front panel has additional user-programmable pushbuttons.

The modular design allows the relay to be upgraded and repaired by qualified service personnel. The front panel is hinged to allow easy access to the modules. The front panel is itself removable to allow mounting on doors with limited rear depth and for upgrading.

The case dimensions are shown in the following figures, along with panel cutout details for panel mounting. When planning the location of your panel cutout, ensure that provision is made for the front panel to swing open without interference to or from adjacent equipment.

Mount the relay such that the front panel sits semi-flush with the panel or switchgear door, allowing the operator access to the keypad and the RS232 communications port.

Figure 3-7: Vertical dimensions and mounting (enhanced front panel)

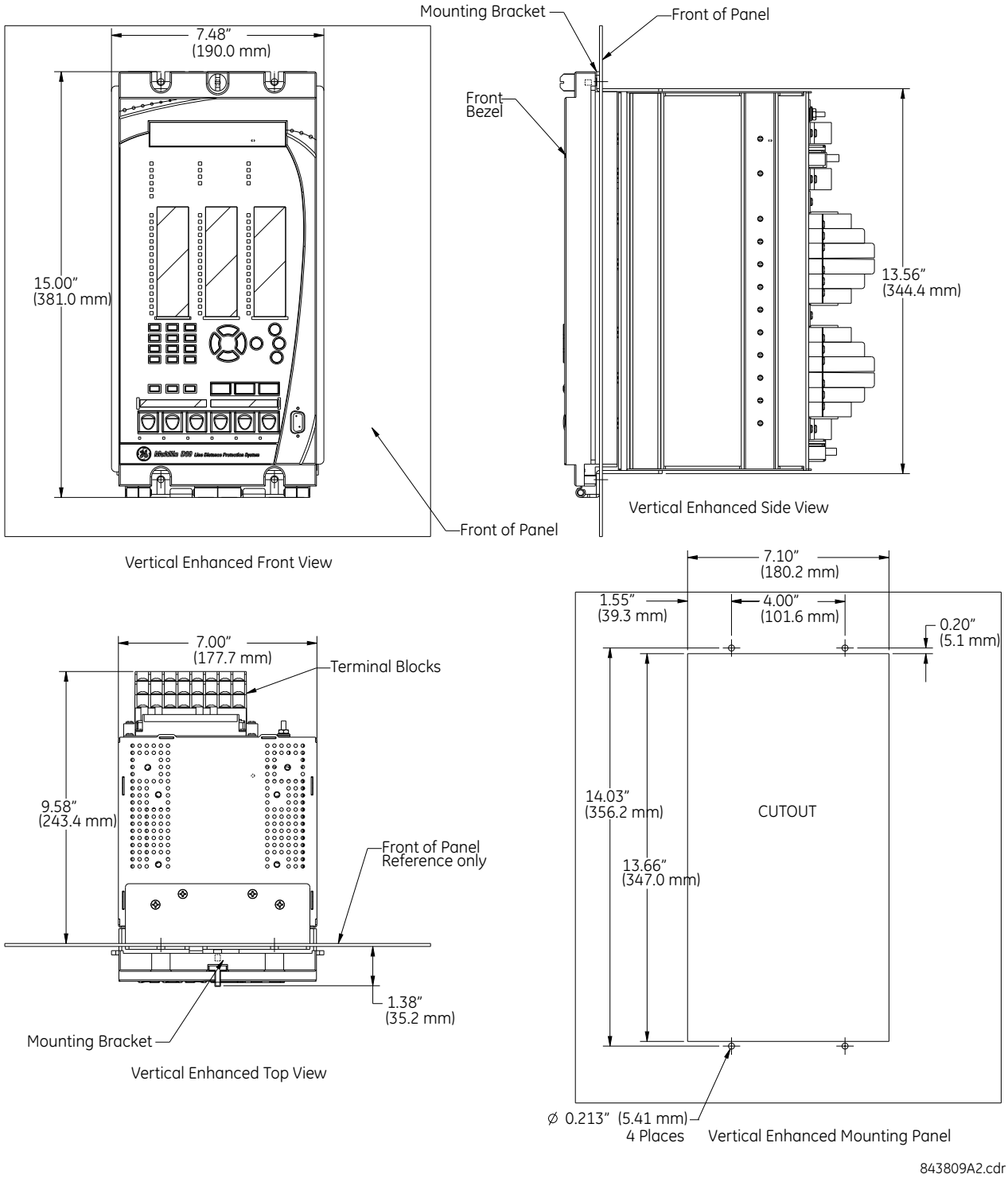

3

Figure 3-8: Vertical dimensions and mounting (basic front panel)

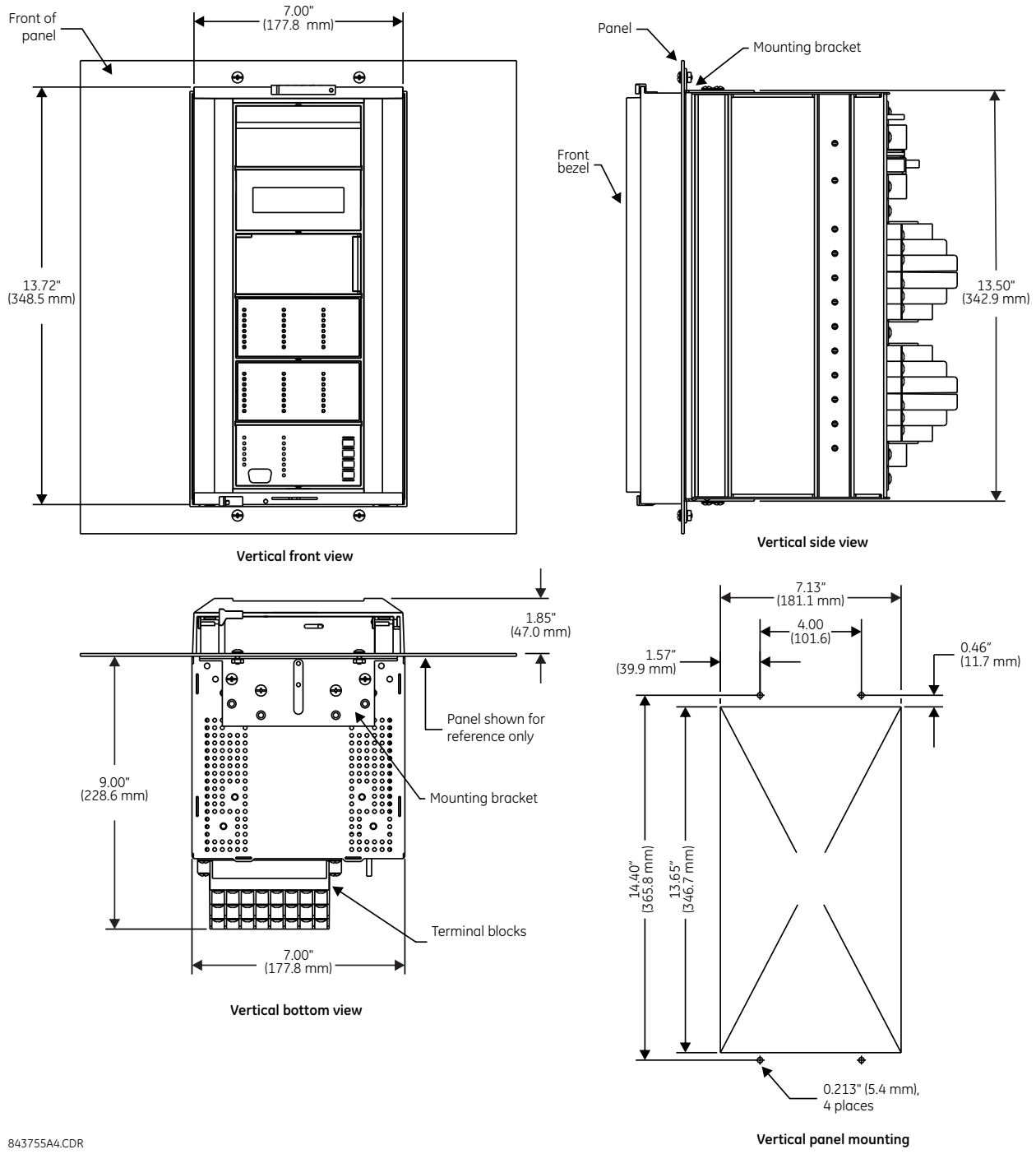

For side-mounting C70 devices with the enhanced front panel, see the following documents available on the UR DVD and the GE Grid Solutions website:

- GEK-113180 — UR-Series UR-V Side-Mounting Front Panel Assembly Instructions
- GEK-113181 — Connecting a Remote UR-V Enhanced Front Panel to a Vertical UR Device Instruction Sheet
- GEK-113182 — Connecting a Remote UR-V Enhanced Front Panel to a Vertically-Mounted Horizontal UR Device Instruction Sheet

For side-mounting C70 devices with the basic front panel, use the following figures.

Figure 3-9: Vertical side-mounting installation (basic front panel)

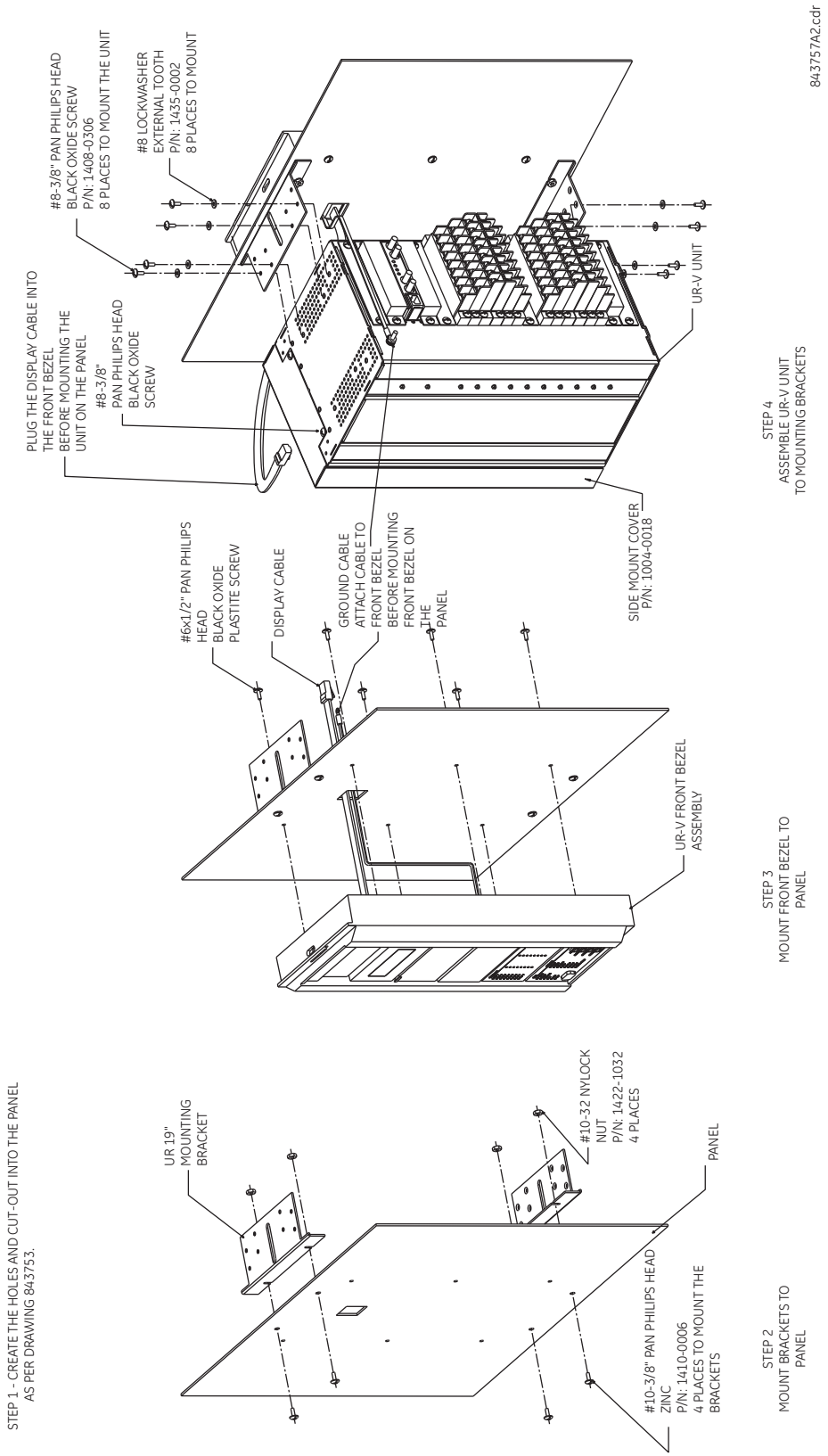

3

Figure 3-10: Vertical side-mounting rear dimensions (basic front panel)

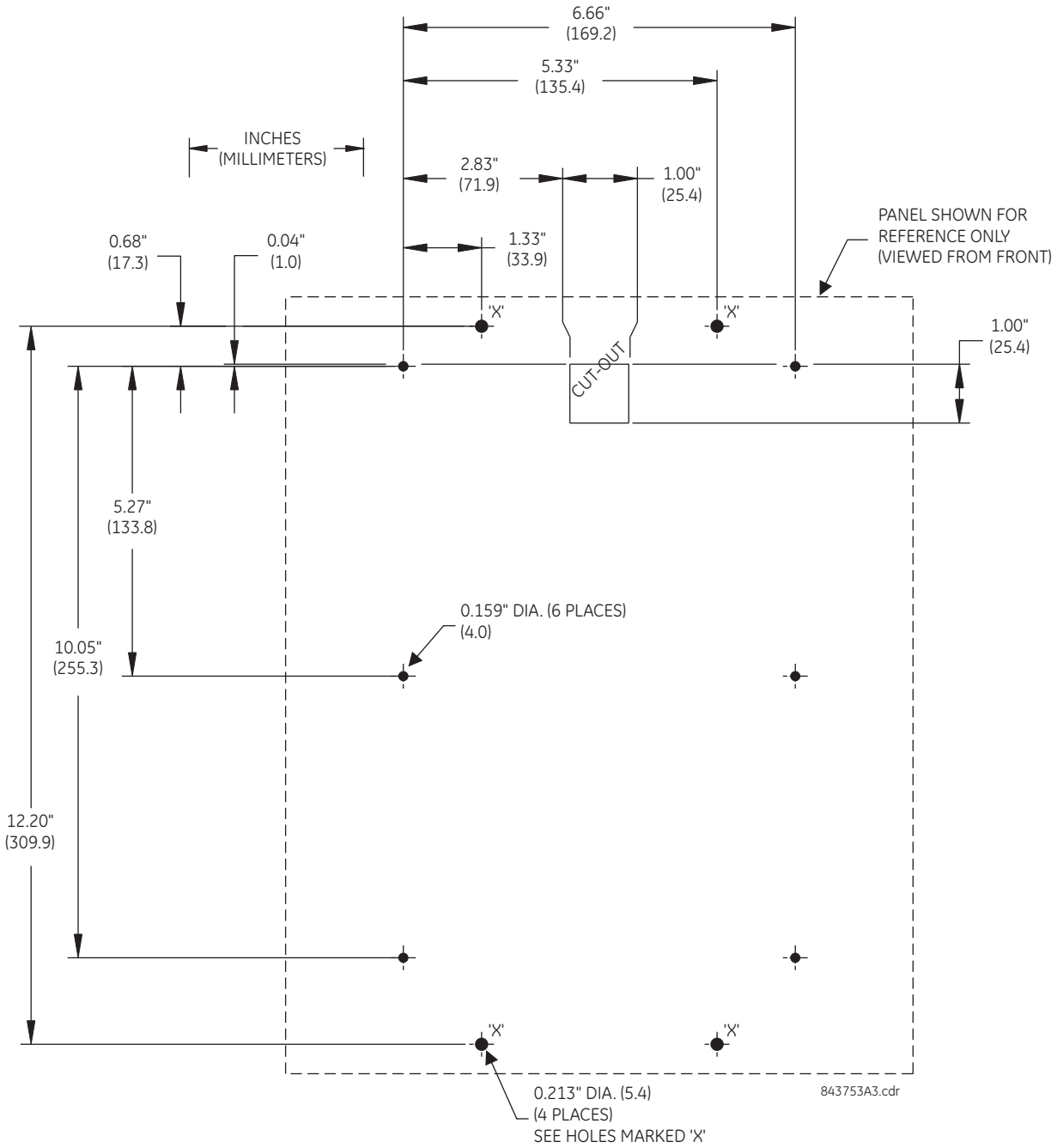

3.2.3 Rear terminal layout

The rear terminals depend on order code. An example is shown.

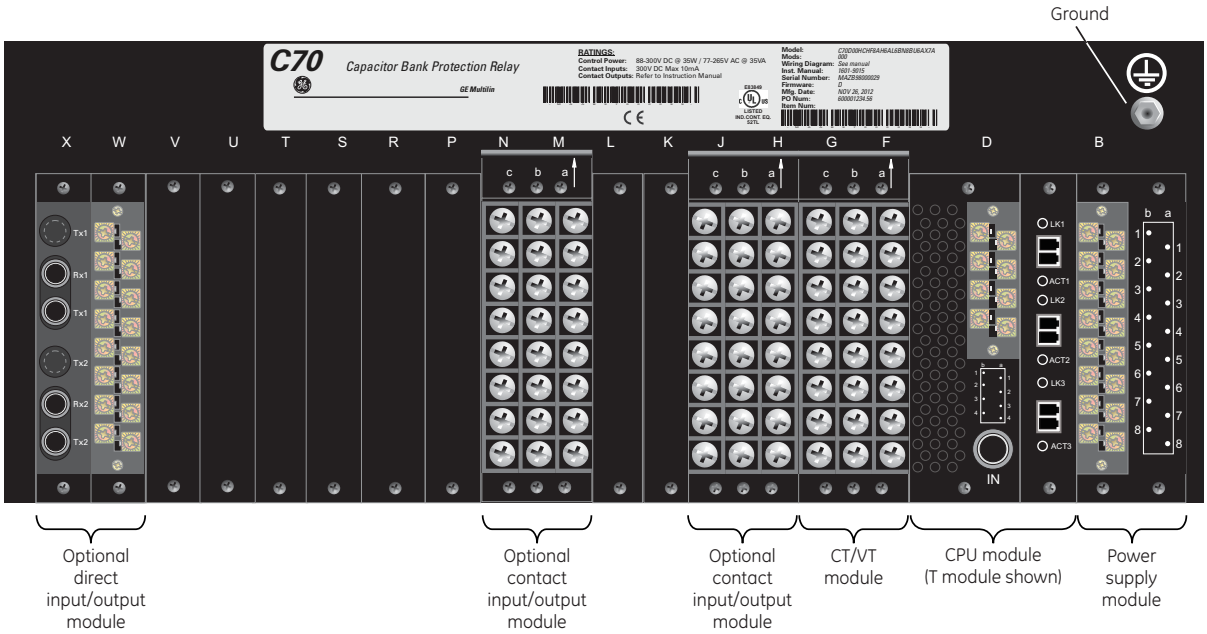

834775A3.CDR

WARNING **Do not touch any rear terminals while the relay is energized, else death or serious injury can result from electrical shock.**

NOTICE Small form-factor pluggable ports (SFPs) are pluggable transceivers. They transmit, receive, and convert electrical signals to optical signals and vice-versa. Supplied with the device, they are inserted into the Ethernet ports on the CPU module. A photo in the Maintenance chapter shows this plug-in device. Do not use non-validated transceivers or install validated transceivers in the wrong Ethernet slot, else damage can occur.

When using a Process Bus Module, to view if the SFP is 100 Mbps or 1 Gbps, enter the IP address of the C70 in a web browser and access **Process Card Menu > Process Card SFP Information** or look at the model number on the SFP.

Terminal number assignments are three characters long and assigned by module slot position, row number, and column letter. Two-slot wide modules take their slot designation from the first slot position (nearest to CPU module), indicated by an arrow on the terminal block. The figure shows an example of rear terminal assignments.

3

Figure 3-11: Example of modules in F and H slots

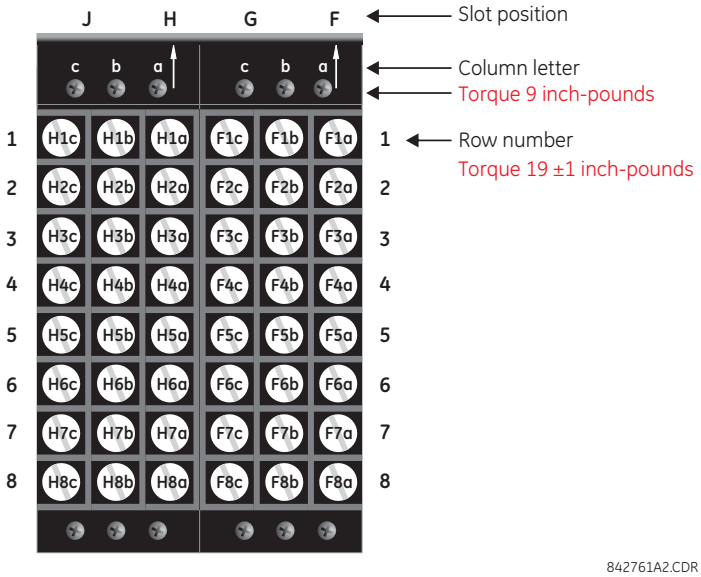

The torque used to connect the screws that connect the terminal blocks (top screws a, b, c) and the metal plates over empty slots to the chassis is 9 inch-pounds. For the screws used to wire the terminal blocks (rows 1 to 8), use 19±1 inch-pounds.

The CPU module type depends on order code. During manufacturing, the power supply and CPU modules are installed in slots B and D of the chassis with 13 inch-pounds of torque on the screws at the top and bottom of the modules. Wire connections to these two modules at 13 inch-pounds.

Figure 3-12: CPU modules and power supply

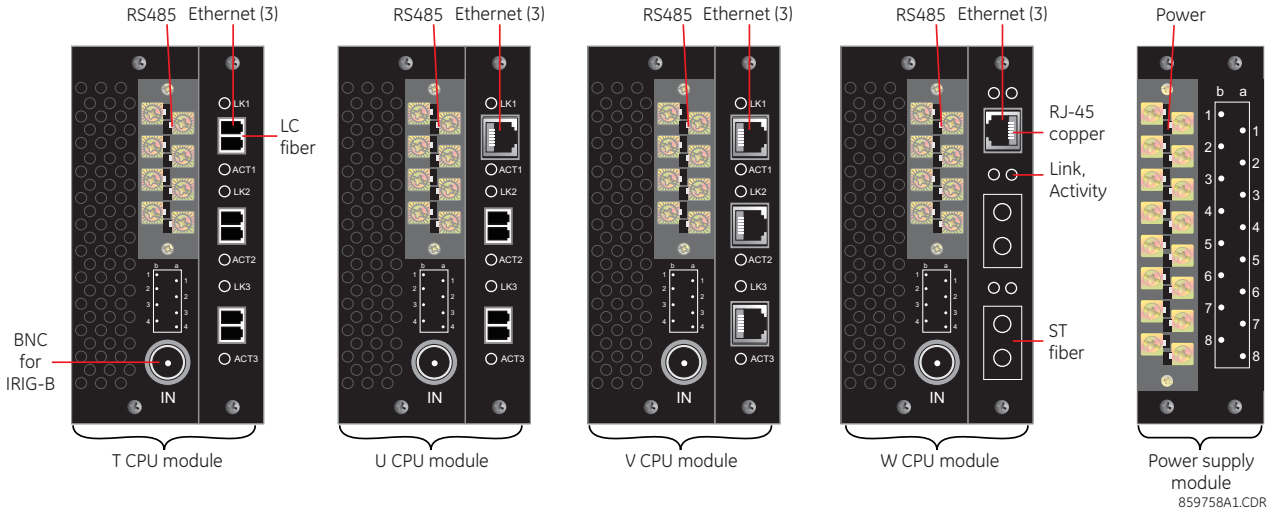

The following figure shows the optical connectors for CPU modules.

Figure 3-13: LC fiber connector (left) and ST fiber connector (right)

Speeds for the LC connections on non-HardFiber Process Bus Modules are as follows:

- Order code 85 — 1000Base-SX ports 1a and 1b, or ports 3a and 3b
- Order code 86 — 1000Base-SX ports 1a, 1b, 3a, 3b; 100Base-FX ports 2a, 2b, 4a, 4b
- Order code 87 — 100Base-FX ports 1a, 1b, 2a, 2b

3.3 Wiring

3.3.1 Typical wiring

NOTE

For Sampled Value (SV) applications using a Process Bus Module with order code 85, 86, or 87 with IRIG-B for synchronization, follow the recommended cables and grounding connections outlined here and later.

3

Figure 3-14: Typical wiring diagram (T module shown for CPU)

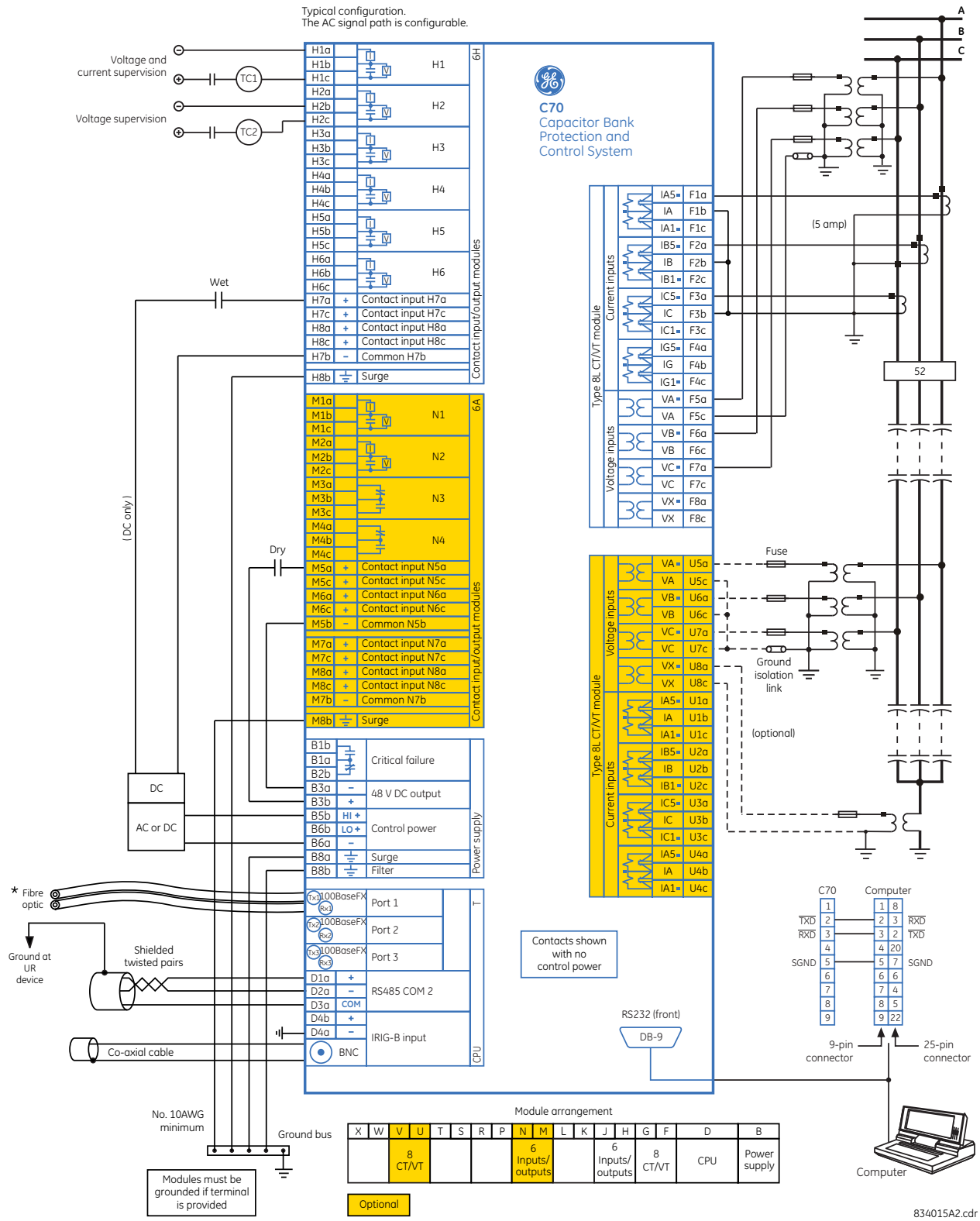

3.3.2 Dielectric strength

Dielectric strength is the maximum electric strength that can be sustained without breakdown. It is measured in volts.

The table shows the dielectric strength of the UR-series module hardware.

Table 3-1: Dielectric strength of UR modules

Module type	Module function	Terminals		Dielectric strength
		From	To	
1	Power supply	High (+); Low (+); (–)	Chassis	2000 V AC for 1 minute
1	Power supply	48 V DC (+) and (–)	Chassis	2000 V AC for 1 minute
1	Power supply	Relay terminals except terminals 8a and 8b	Chassis	2000 V AC for 1 minute
2	Reserved	N/A	N/A	N/A
3	Reserved	N/A	N/A	N/A
4	Digital contact inputs/ outputs	All	Chassis	2000 V AC for 1 minute
5	Analog inputs/outputs	All except 8b	Chassis	< 50 V DC
6	Digital contact inputs/ outputs	All	Chassis	2000 V AC for 1 minute
7	G.703	All except 2b, 3a, 7b, 8a	Chassis	2000 V AC for 1 minute
	RS422	All except 6a, 7b, 8a	Chassis	< 50 V DC
8	CT/VT	All	Chassis	2000 V AC for 1 minute
9	CPU	All	Chassis	2000 V AC for 1 minute

NOTICE Filter networks and transient protection clamps are used in the hardware to prevent damage caused by high peak voltage transients, radio frequency interference (RFI), and electromagnetic interference (EMI). These protective components can be damaged by application of the ANSI/IEEE C37.90 specified test voltage for longer than the specified minute.

3.3.3 Control power

NOTICE Power supplied to the relay must be connected to the matching power supply range of the relay. If incorrect voltage is applied or voltage is applied to the wrong terminals, damage can occur.

The C70, like almost all electronic relays, contains electrolytic capacitors. These capacitors are well-known to deteriorate over time if voltage is not applied periodically. Deterioration can be avoided by powering up the relay at least once a year.

The power supply module is ordered with one of two possible voltage ranges, and the C70 can be ordered with or without a redundant power supply module option. Each range has a dedicated input connection for proper operation. The ranges are as follows (see the Specifications section of chapter 2 for details):

- Low (LO) range — 24 to 48 V (DC only) nominal
- High (HI) range — 125 to 250 V nominal

The power supply module provides power to the relay and supplies power for dry contact input connections.

The power supply module provides 48 V DC power for dry contact input connections and a critical failure relay (see the Typical Wiring Diagram earlier). The critical failure relay is a form-C device that is energized once control power is applied and the relay has successfully booted up with no critical self-test failures. If ongoing self-test diagnostic checks detect a critical failure (see the Self-Test Errors section in chapter 7) or control power is lost, the relay de-energizes.

⚠WARNING **Connect all wires at be back of a UR before connecting to power, else death or serious injury can result from electrical shock.**

To connect power to the relay:

1. On the power supply module in the first slot, slot B, on the back of the device, connect the three wires to the terminals, or connect two to the terminals and the third to the ground screw. 14 gauge stranded wire with disconnect devices is recommended. Use 13 inch-pounds torque. Connect all wires to the relay before turning on power.

For high-reliability systems, the C70 has a redundant option in which two C70 power supplies are placed in parallel on the bus. If one of the power supplies becomes faulted, the second power supply assumes the full load of the relay without any interruptions. Each power supply has a green LED on the front of the module to indicate that it is functional. The critical fail relay of the module also indicates a faulted power supply.

An LED on the front of the control power module shows the status of the power supply, as outlined in the table.

Table 3-2: Power supply LED on module

LED indication	Power supply
Continuous on	OK
On/off cycling	Failure
Off	Failure or no power

Figure 3-15: Control power connection

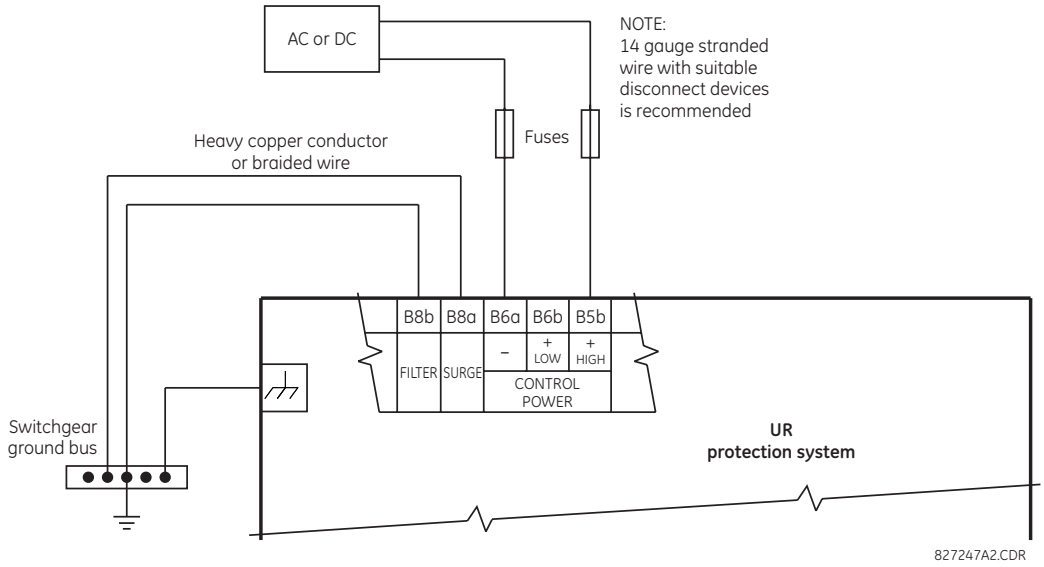

3.3.3.1 Non-volatile data storage

Non-volatile data is temporary data required after a power cycle for relay state, such as latch status before reboot. The relay saves this data in non-volatile storage every two minutes or when a state change occurs.

If a state change occurs just before a power down (less than two minutes) and the relay power is cycled, some temporary data can be saved and the prior state is retained at power up. Otherwise, a two-minute powered on period after a state change ensures that all temporary state changes required after reboot have been saved. A command also is available to initiate saving of data in the compact flash memory using **Commands > Relay Maintenance > Save Volatile Data**.

3.3.4 CT/VT modules

The CT and VT inputs are analog current transformer and voltage transformer signals used to monitor AC power lines. The UR-series relays support 1 A and 5 A CTs.

A CT/VT module can have current or voltage inputs on channels 1 through 4 inclusive, or channels 5 through 8 inclusive. Channels 1 and 5 are intended for connection to phase A, and are labelled as such in the relay. Likewise, channels 2 and 6 are intended for connection to phase B, and channels 3 and 7 are intended for connection to phase C.

Channels 4 and 8 are intended for connection to a single-phase source. For voltage inputs, these channels are labelled as auxiliary voltage (VX). For current inputs, these channels are intended for connection to a CT between system neutral and ground, and are labelled as ground current (IG).

NOTICE Verify that the connection made to the relay terminals for nominal current of 1 A or 5 A matches the secondary rating of the connected CTs. Unmatched CTs can result in equipment damage or inadequate protection.

To connect to the module, size 12 American Wire Gauge (AWG) is used commonly; the maximum size is 10 AWG.

CT/VT modules can be ordered with a standard ground current input that is the same as the phase current input. Each AC current input has an isolating transformer and an automatic shorting mechanism that shorts the input when the module is withdrawn from the chassis. There are no internal ground connections on the current inputs. Current transformers with 1 to 50000 A primaries and 1 A or 5 A secondaries can be used.

These modules have enhanced diagnostics that can detect automatically CT/VT hardware failure and take the relay out of service.

CT connections for both ABC and ACB phase rotations are identical, as shown in the Typical Wiring Diagram.

The exact placement of a zero-sequence core balance CT to detect ground fault current is shown as follows. Twisted-pair cabling on the zero-sequence CT is recommended.

Figure 3-16: Zero-sequence core balance CT installation

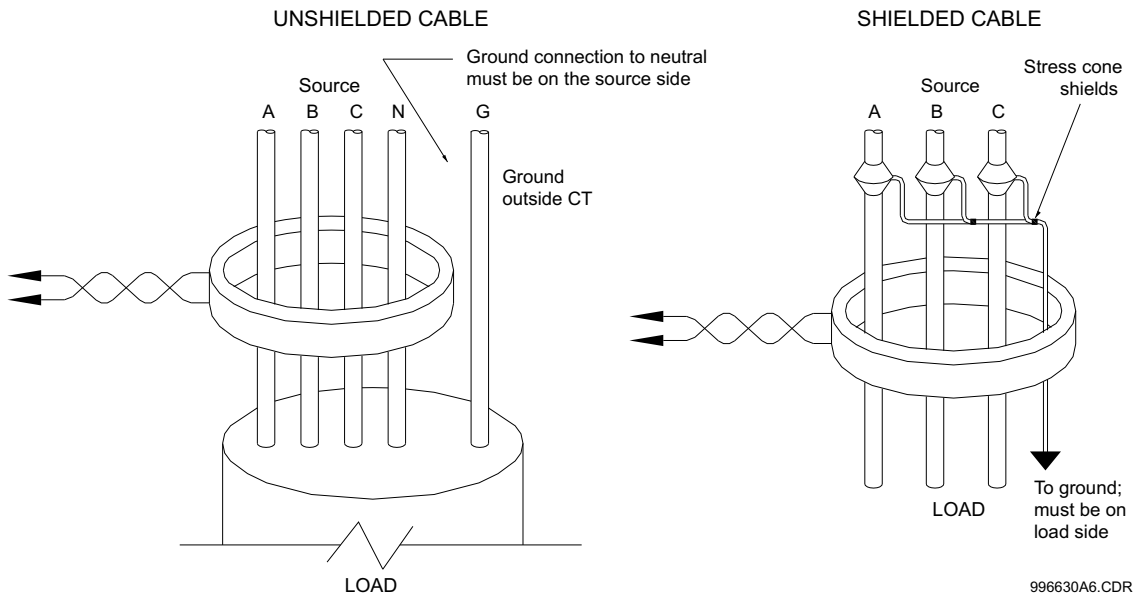

The phase voltage channels are used for most metering and protection purposes. The auxiliary voltage channel is used as input for the synchrocheck and volts-per-hertz features, which are optional features for some UR models.

NOTE Substitute the tilde "~" symbol with the slot position of the module in the following figure.

3

Figure 3-17: CT/VT module wiring

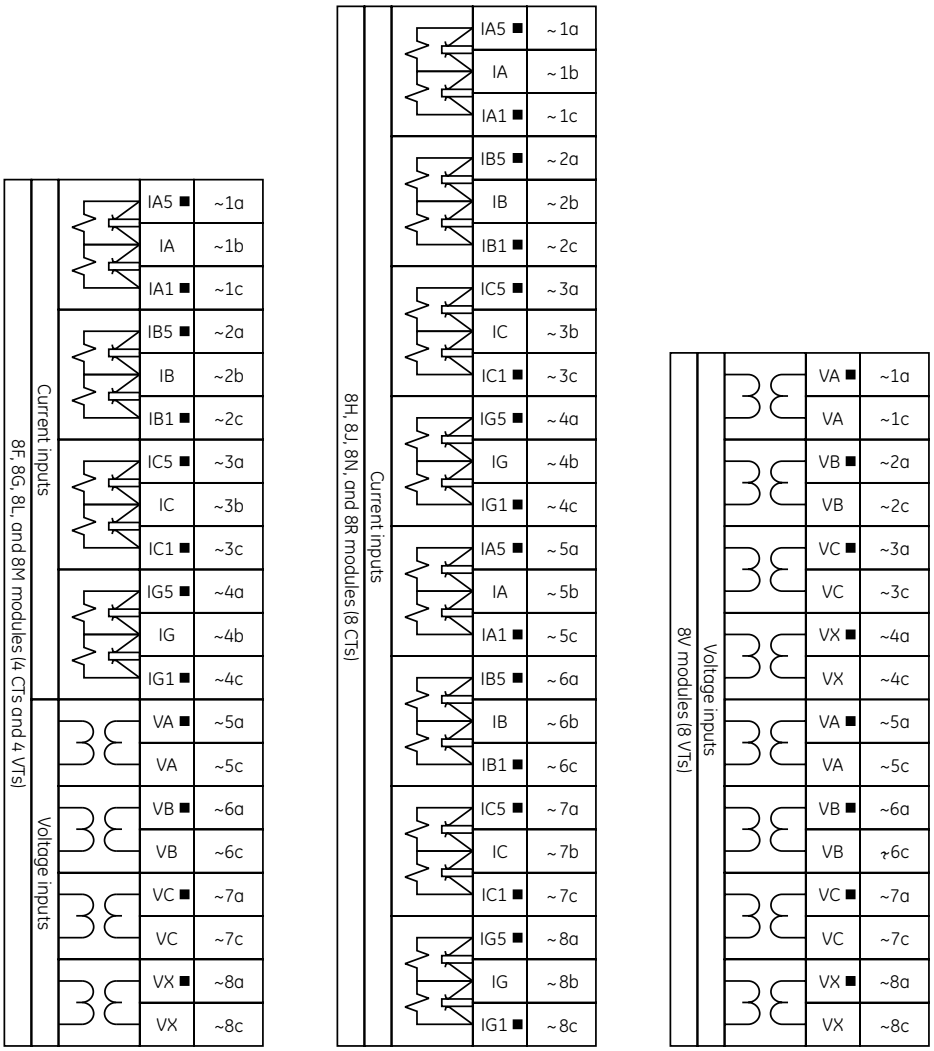

3.3.5 Process Bus Module for HardFiber

The C70 can be ordered with a process bus interface module to interface with the HardFiber Process Bus System, or HardFiber Brick, allowing bidirectional IEC 61850 fiber-optic communications with up to eight HardFiber Bricks. The HardFiber system integrates seamlessly with the existing UR-series applications, including protection functions, FlexLogic, metering, and communications.

This process bus system offers the following benefits:

- Reduces labor associated with design, installation, and testing of protection and control applications using the UR by reducing the number of individual copper terminations
- Integrates seamlessly with existing UR applications, since the IEC 61850 process bus interface module replaces the traditional CT/VT modules
- Communicates using open standard IEC 61850 messaging

For details on the HardFiber system, see its Instruction Manual.

3.3.6 Contact inputs and outputs

Nearly all contact input/output modules have 24 terminal connections. The connections are arranged typically as three terminals per row, with eight rows in total. A given row of three terminals can be used for the outputs of one relay. For example, for form-C relay outputs, the terminals connect to the normally open (NO), normally closed (NC), and common contacts of the relay. For a form-A output, there are options of using current or voltage detection for feature supervision, depending on the module ordered. The terminal configuration for contact inputs is different for the two applications.

The contact inputs are grouped with a common return. The input/output modules have three versions of grouping: four inputs per common return, five inputs per common return on a high-density module, and two inputs per common return. When a contact input/output module is ordered, four inputs per common is used. If the inputs must be isolated per row, then two inputs per common return are selected (4D module). If the space limitation in the relay requires use of a high-density input module (6W), five inputs share one common return and the module has six banks of inputs.

The tables and diagrams that follow illustrate the module types (6A and so on) and contact arrangements that can be ordered for the relay. Since an entire row is used for a single contact output, the name is assigned using the module slot position and row number. However, since there are two contact inputs per row, these names are assigned by module slot position, row number, and column position.

Some form-A / solid-state relay outputs include circuits to monitor the DC voltage across the output contact when it is open, and the DC current through the output contact when it is closed. Each of the monitors contains a level detector whose output is set to logic “On = 1” when the current in the circuit is above the threshold setting. The voltage monitor is set to “On = 1” when there is a voltage across open contact (the detector allows a current of about 1 to 2.5 mA), and the current monitor is set to “On = 1” when the current flowing through the closed contact exceeds about 80 to 100 mA. The voltage monitor is intended to check the health of the overall trip circuit, and the current monitor can be used to seal-in the output contact until an external contact has interrupted current flow. If enabled, the current monitoring can be used as a seal-in signal to ensure that the form-A contact does not attempt to break the energized inductive coil circuit and weld the output contacts.

Block diagrams are shown as follows for form-A and solid-state relay outputs with optional voltage monitor, optional current monitor, and with no monitoring. The actual values shown for contact output 1 are the same for all contact outputs. Form-A contact output with or without a current or voltage monitoring option is not polarity sensitive. The polarity shown in the figure is required for solid-state contact output connection.

Figure 3-18: Form-A and solid-state contact outputs with voltage and current monitoring

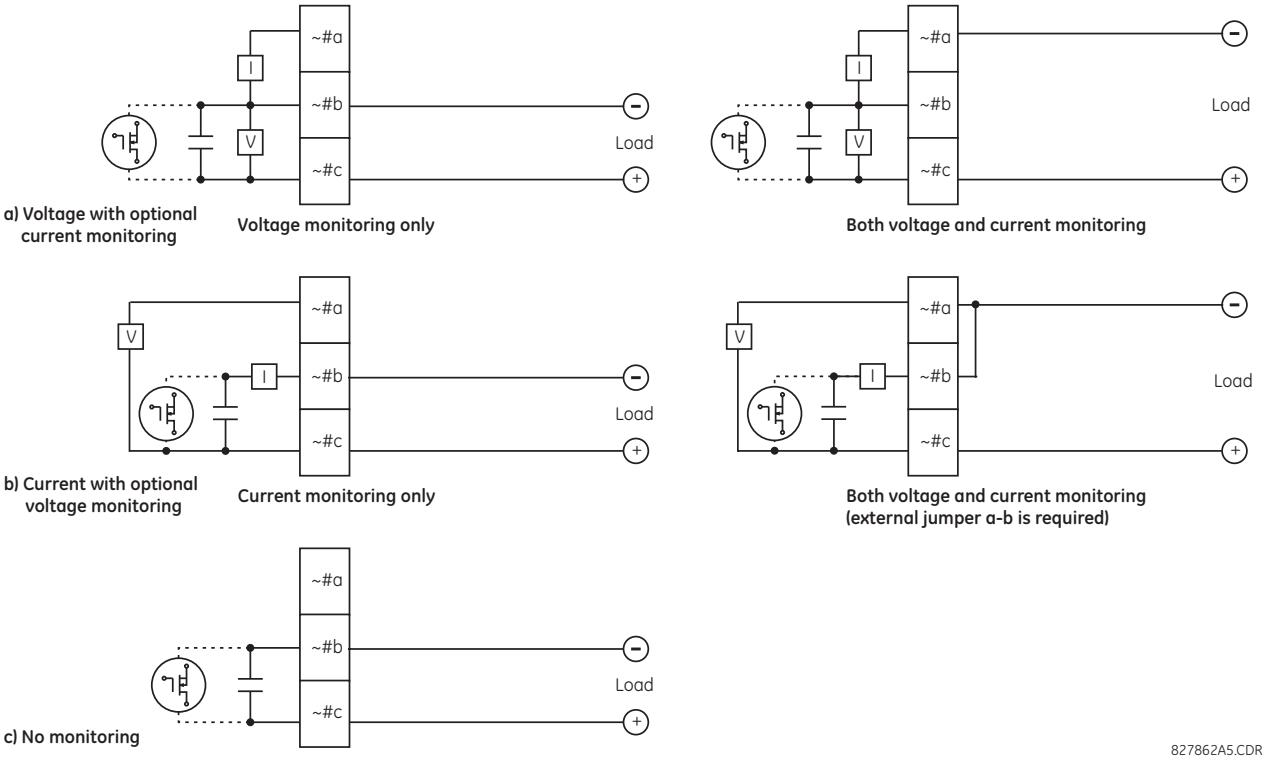

The operation of voltage and current monitors is reflected with the corresponding FlexLogic operands (CONT OP # VON, CONT OP # VOFF, and CONT OP # ION) that can be used in protection, control, and alarm logic. The typical application of the voltage monitor is breaker trip circuit integrity monitoring; a typical application of the current monitor is seal-in of the control command.

See the Digital Elements section of chapter 5 for an example of how form-A and solid-state relay contacts can be applied for breaker trip circuit integrity monitoring.

WARNING **Consider relay contacts unsafe to touch when the unit is energized. Death or serious injury can result from touching live relay contacts.**

NOTE

USE OF FORM-A AND SOLID-STATE RELAY OUTPUTS IN HIGH-IMPEDANCE CIRCUITS

For form-A and solid-state relay output contacts internally equipped with a voltage measuring circuit across the contact, the circuit has an impedance that can cause a problem when used in conjunction with external high-input impedance monitoring equipment, such as modern relay test set trigger circuits. These monitoring circuits can continue to read the form-A contact as being closed after it has closed and subsequently opened, when measured as an impedance.

The solution is to use the voltage measuring trigger input of the relay test set, and connect the form-A contact through a voltage-dropping resistor to a DC voltage source. If the 48 V DC output of the power supply is used as a source, a 500 Ω, 10 W resistor is appropriate. In this configuration, the voltage across either the form-A contact or the resistor can be used to monitor the state of the output.

NOTE

Where a tilde "~" symbol appears, substitute the slot position of the module. Where a number sign "#" appears, substitute the contact number.

NOTICE When current monitoring is used to seal-in the form-A and solid-state relay contact outputs, give the FlexLogic operand driving the contact output a reset delay of 10 ms to prevent damage of the output contact (in situations when the element initiating the contact output is bouncing, at values in the region of the pickup value).

For high-density input/output modules 6W and 6X, use the following guidelines to connect. The new I/O modules use pin type terminal blocks instead of the current ring type. The new terminals are required to achieve higher I/O count per module.

- 12 to 24 AWG (3.3 mm^2 to 0.2 mm^2), single wire termination
- 16 to 24 AWG (1.31 mm^2 to 0.2 mm^2), multiple wire termination with matching wire sizes and stranding. Two wires maximum per circuit.
- Suggested wiring screw tightening torque is a minimum 4.43 in-lb (0.5 Nm) and maximum 5.31 in-lb (0.6 Nm)
- Minimum suggested temperature rating for the conductors is 75°C
- Wire type: copper

Table 3-3: Contact input and output module assignments

~6A module	
Terminal assignment	**Output or input**
~1	Form-A
~2	Form-A
~3	Form-C
~4	Form-C
~5a, ~5c	2 Inputs
~6a, ~6c	2 Inputs
~7a, ~7c	2 Inputs
~8a, ~8c	2 Inputs

~6B module	
Terminal assignment	**Output or input**
~1	Form-A
~2	Form-A
~3	Form-C
~4	Form-C
~5	Form-C
~6	Form-C
~7a, ~7c	2 Inputs
~8a, ~8c	2 Inputs

~6C module	
Terminal assignment	**Output**
~1	Form-C
~2	Form-C
~3	Form-C
~4	Form-C
~5	Form-C
~6	Form-C
~7	Form-C
~8	Form-C

~6D module	
Terminal assignment	**Output**
~1a, ~1c	2 Inputs
~2a, ~2c	2 Inputs
~3a, ~3c	2 Inputs
~4a, ~4c	2 Inputs
~5a, ~5c	2 Inputs
~6a, ~6c	2 Inputs
~7a, ~7c	2 Inputs
~8a, ~8c	2 Inputs

~6E module	
Terminal assignment	**Output or input**
~1	Form-C
~2	Form-C
~3	Form-C
~4	Form-C
~5a, ~5c	2 Inputs
~6a, ~6c	2 Inputs
~7a, ~7c	2 Inputs
~8a, ~8c	2 Inputs

~6F module	
Terminal assignment	**Output**
~1	Fast Form-C
~2	Fast Form-C
~3	Fast Form-C
~4	Fast Form-C
~5	Fast Form-C
~6	Fast Form-C
~7	Fast Form-C
~8	Fast Form-C

~6G module	
Terminal assignment	**Output or input**
~1	Form-A
~2	Form-A
~3	Form-A
~4	Form-A
~5a, ~5c	2 Inputs
~6a, ~6c	2 Inputs
~7a, ~7c	2 Inputs
~8a, ~8c	2 Inputs

~6H module	
Terminal assignment	**Output or input**
~1	Form-A
~2	Form-A
~3	Form-A
~4	Form-A
~5	Form-A
~6	Form-A
~7a, ~7c	2 Inputs
~8a, ~8c	2 Inputs

~6K module	
Terminal assignment	**Output**
~1	Form-C
~2	Form-C
~3	Form-C
~4	Form-C
~5	Fast Form-C

~6L module	
Terminal assignment	**Output or input**
~1	Form-A
~2	Form-A
~3	Form-C
~4	Form-C
~5a, ~5c	2 Inputs

~6M module	
Terminal assignment	**Output or input**
~1	Form-A
~2	Form-A
~3	Form-C
~4	Form-C
~5	Form-C

~6N module	
Terminal assignment	**Output or input**
~1	Form-A
~2	Form-A
~3	Form-A
~4	Form-A
~5a, ~5c	2 Inputs

3

~6K module	
Terminal assignment	Output
~6	Fast Form-C
~7	Fast Form-C
~8	Fast Form-C

~6L module	
Terminal assignment	Output or input
~6a, ~6c	2 Inputs
~7a, ~7c	2 Inputs
~8a, ~8c	2 Inputs

~6M module	
Terminal assignment	Output or input
~6	Form-C
~7a, ~7c	2 Inputs
~8a, ~8c	2 Inputs

~6N module	
Terminal assignment	Output or input
~6a, ~6c	2 Inputs
~7a, ~7c	2 Inputs
~8a, ~8c	2 Inputs

~6P module	
Terminal assignment	Output or input
~1	Form-A
~2	Form-A
~3	Form-A
~4	Form-A
~5	Form-A
~6	Form-A
~7a, ~7c	2 Inputs
~8a, ~8c	2 Inputs

~6R module	
Terminal assignment	Output or input
~1	Form-A
~2	Form-A
~3	Form-C
~4	Form-C
~5a, ~5c	2 Inputs
~6a, ~6c	2 Inputs
~7a, ~7c	2 Inputs
~8a, ~8c	2 Inputs

~6S module	
Terminal assignment	Output or input
~1	Form-A
~2	Form-A
~3	Form-C
~4	Form-C
~5	Form-C
~6	Form-C
~7a, ~7c	2 Inputs
~8a, ~8c	2 Inputs

~6T module	
Terminal assignment	Output or input
~1	Form-A
~2	Form-A
~3	Form-A
~4	Form-A
~5a, ~5c	2 Inputs
~6a, ~6c	2 Inputs
~7a, ~7c	2 Inputs
~8a, ~8c	2 Inputs

~6U module	
Terminal assignment	Output or input
~1	Form-A
~2	Form-A
~3	Form-A
~4	Form-A
~5	Form-A
~6	Form-A
~7a, ~7c	2 Inputs
~8a, ~8c	2 Inputs
---	---
---	---
---	---
---	---
---	---
---	---
---	---
---	---
---	---
---	---
---	---
---	---
---	---
---	---
---	---
---	---
---	---

~6V module	
Terminal assignment	Output or input
~1	Form-A
~2	Form-A
~3	Form-C
~4	2 Outputs
~5a, ~5c	2 Inputs
~6a, ~6c	2 Inputs
~7a, ~7c	2 Inputs
~8a, ~8c	2 Inputs
---	---
---	---
---	---
---	---
---	---
---	---
---	---
---	---
---	---
---	---
---	---
---	---
---	---
---	---
---	---
---	---
---	---

~6W module	
Terminal assignment	Output or input
~1a	Input
~2a	Input
~3a	Input
~4a	Input
~5a	Input
~7a	Input
~8a	Input
~9a	Input
~10a	Input
~11a	Input
~13a	Input
~14a	Input
~15a	Input
~16a	Input
~17a	Input
~1b	Input
~2b	Input
~3b	Input
~4b	Input
~5b	Input
~7b	Input
~8b	Input
~9b	Input
~10b	Input
~11b	Input

6X module	
Terminal assignment	Output or input
~1a, ~2a	Form-A
~3a, ~4a	Form-A
~5a, ~6a	Form-A
~7a, ~8a	Form-A
~9a, ~10a	Form-A
~11a, ~12a	Form-A
~13a, ~14a	Form-A
~15a, ~16a	Form-A
~17a, ~18a	Form-A
~1b, ~2b	Form-A
~3b, ~4b	Form-A
~5b, ~6b	Form-A
~7b, ~8b	Form-A
~9b, ~10b	Form-A
~11b, ~12b	Form-A
~13b, ~14b	Form-A
~15b, ~16b	Form-A
~17b, ~18b	Form-A
---	---
---	---
---	---
---	---
---	---
---	---
---	---

~6U module	
Terminal assignment	**Output or input**
---	---
---	---
---	---
---	---
---	---

~6V module	
Terminal assignment	**Output or input**
---	---
---	---
---	---
---	---
---	---

~6W module	
Terminal assignment	**Output or input**
~13b	Input
~14b	Input
~15b	Input
~16b	Input
~17b	Input

6X module	
Terminal assignment	**Output or input**
---	---
---	---
---	---
---	---
---	---

~67 module	
Terminal assignment	**Output**
~1	Form-A
~2	Form-A
~3	Form-A
~4	Form-A
~5	Form-A
~6	Form-A
~7	Form-A
~8	Form-A

~4A module	
Terminal assignment	**Output**
~1	Not Used
~2	Solid-State
~3	Not Used
~4	Solid-State
~5	Not Used
~6	Solid-State
~7	Not Used
~8	Solid-State

~4B module	
Terminal assignment	**Output**
~1	Not Used
~2	Solid-State
~3	Not Used
~4	Solid-State
~5	Not Used
~6	Solid-State
~7	Not Used
~8	Solid-State

~4C module	
Terminal assignment	**Output**
~1	Not Used
~2	Solid-State
~3	Not Used
~4	Solid-State
~5	Not Used
~6	Solid-State
~7	Not Used
~8	Solid-State

~4D module	
Terminal assignment	**Output**
~1a, ~1c	2 Inputs
~2a, ~2c	2 Inputs
~3a, ~3c	2 Inputs
~4a, ~4c	2 Inputs
~5a, ~5c	2 Inputs
~6a, ~6c	2 Inputs
~7a, ~7c	2 Inputs
~8a, ~8c	2 Inputs

~4L module	
Terminal assignment	**Output**
~1	2 Outputs
~2	2 Outputs
~3	2 Outputs
~4	2 Outputs
~5	2 Outputs
~6	2 Outputs
~7	2 Outputs
~8	Not Used

Figure 3-19: Contact input and output module wiring (Sheet 1 of 3)

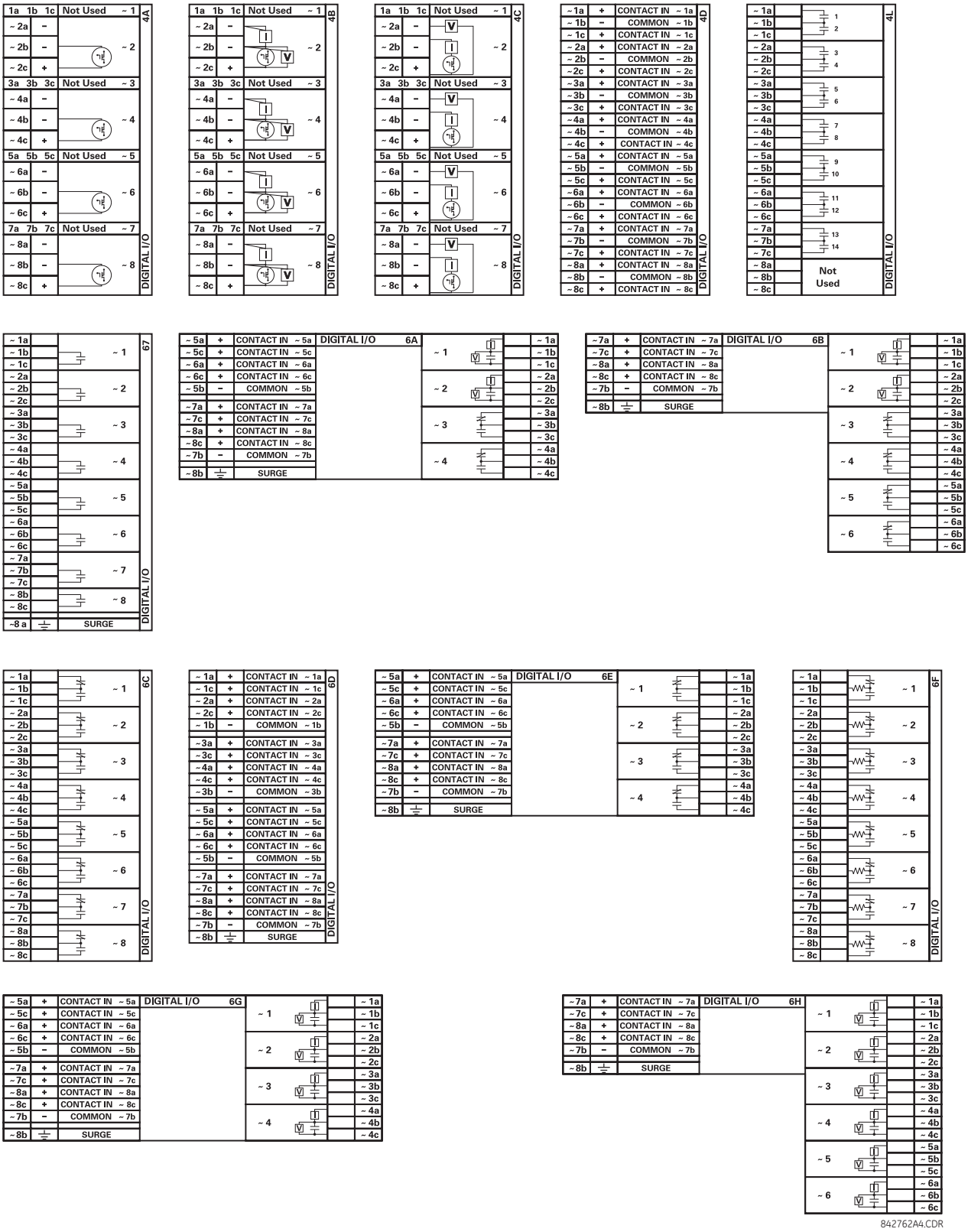

Figure 3-20: Contact input and output module wiring (Sheet 2 of 3)

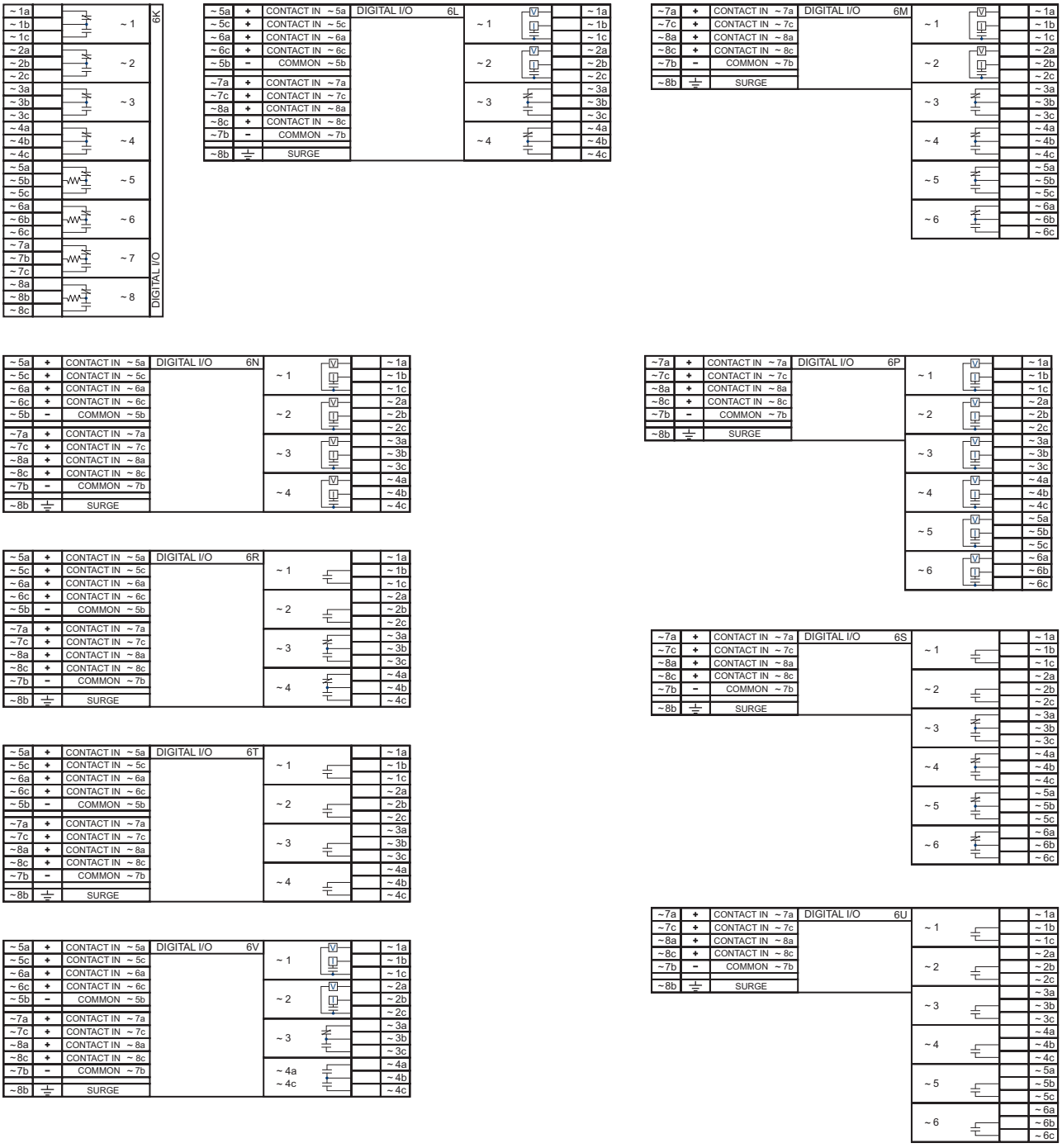

842763A2.CDR

Figure 3-21: Contact input and output module wiring (Sheet 3 of 3)

DIGITAL I/O					6W
~ 1b	+	CONTACT IN ~ 1b	CONTACT IN ~ 1a	+	~ 1a
~ 2b	+	CONTACT IN ~ 2b	CONTACT IN ~ 2a	+	~ 2a
~ 3b	+	CONTACT IN ~ 3b	CONTACT IN ~ 3a	+	~ 3a
~ 4b	+	CONTACT IN ~ 4b	CONTACT IN ~ 4a	+	~ 4a
~ 5b	+	CONTACT IN ~ 5b	CONTACT IN ~ 5a	+	~ 5a
~ 6b	-	COMMON ~ 6b	COMMON ~ 6a	-	~ 6a
~7b	+	CONTACT IN ~ 7b	CONTACT IN ~ 7a	+	~7a
~8b	+	CONTACT IN ~ 8b	CONTACT IN ~ 8a	+	~8a
~9b	+	CONTACT IN ~ 9b	CONTACT IN ~ 9a	+	~9a
~10b	+	CONTACT IN ~10b	CONTACT IN ~ 10	+	~10a
~11b	+	CONTACT IN ~11b	CONTACT IN ~11a	+	~11a
~12b	-	COMMON ~ 12b	COMMON ~ 12a	-	~12a
~13b	+	CONTACT IN ~ 13b	CONTACT IN ~ 13a	+	~13a
~14b	+	CONTACT IN ~14b	CONTACT IN~ 14a	+	~14a
~15b	+	CONTACT IN ~15b	CONTACT IN ~ 15a	+	~15a
~16b	+	CONTACT IN ~16b	CONTACT IN ~ 16a	+	~16a
~17b	+	CONTACT IN ~17b	CONTACT IN ~17a	+	~17a
~18b	-	COMMON ~ 18b	COMMON ~ 18a	-	~18a

DIGITAL I/O					6X
~ 1b		~ 10	~ 1		~ 1a
~ 2b					~ 2a
~ 3b		~ 11	~ 2		~ 3a
~ 4b					~ 4a
~ 5b		~ 12	~ 3		~ 5a
~ 6b					~ 6a
~ 7b		~ 13	~ 4		~ 7a
~ 8b					~ 8a
~ 9b		~ 14	~ 5		~ 9a
~10b					~ 10a
~11b		~ 15	~ 6		~ 11a
~12b					~ 12a
~13b		~ 16	~ 7		~ 13a
~14b					~ 14a
~15b		~ 17	~ 8		~ 15a
~16b					~ 16a
~17b		~ 18	~ 9		~ 17a
~18b					~ 18a

859759A2.CDR

3

NOTICE For proper functionality, observe the polarity shown in the figures for all contact input and output connections.

3.3.6.1 Contact inputs

A dry contact has one side connected to terminal B3b. This is the positive 48 V DC voltage rail supplied by the power supply module. The other side of the dry contact is connected to the required contact input terminal. Each contact input group has its own common (negative) terminal that must be connected to the DC negative terminal (B3a) of the power supply module. When a dry contact closes, a current of 1 to 3 mA flows through the associated circuit.

A wet contact has one side connected to the positive terminal of an external DC power supply. The other side of this contact is connected to the required contact input terminal. If a wet contact is used, then the negative side of the external source must be connected to the relay common (negative) terminal of each contact group. The maximum external source voltage for this arrangement is 300 V DC.

The voltage threshold at which each group of four contact inputs detects a closed contact input is programmable as 17 V DC for 24 V sources, 33 V DC for 48 V sources, 84 V DC for 110 to 125 V sources, and 166 V DC for 250 V sources.

Figure 3-22: Dry and wet contact input connections

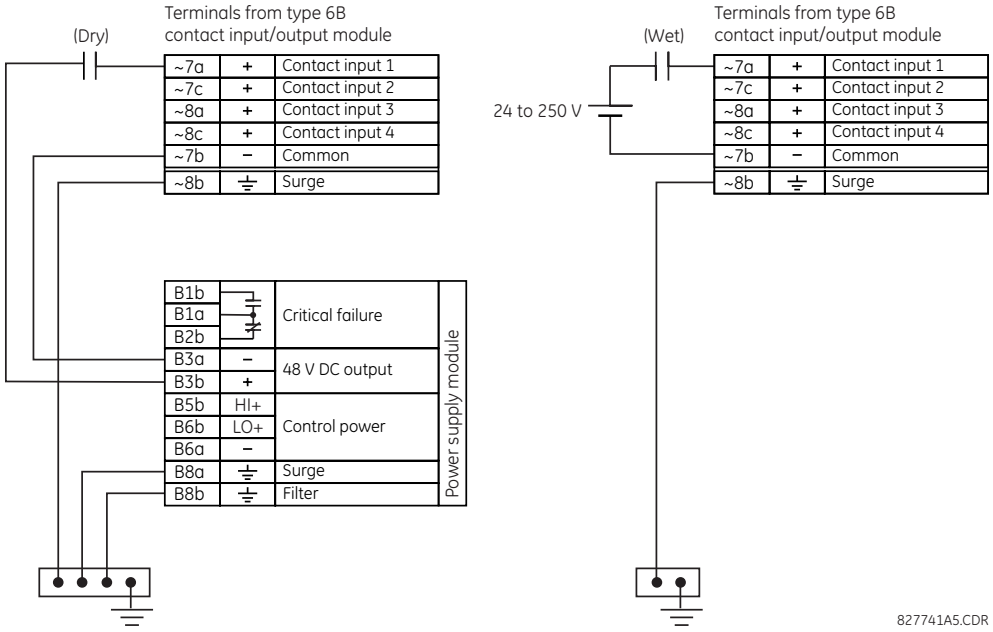

NOTE Where a tilde "~" symbol appears, substitute the slot position of the module.

There is no provision in the relay to detect a DC ground fault on 48 V DC control power external output. We recommend using an external DC supply.

3.3.6.2 General application considerations

Contacts outputs of protective relays, auxiliary contacts from breakers, disconnectors and other devices are connected generally to contacts inputs of protective relays. In some situations, the contact outputs of some protective relays can have high impedance connected across it. When such a contact output is connected across a C70 contact input, it can spuriously operate the C70 input even when the output is open, if there is a substantial distributed capacitance (represented by C1) present in the wiring between the output and the C70 input, and the debounce time setting in the C70 relay is low enough. This false assertion of the contact input, when there is inadvertent ground present at the DC positive terminal, can be prevented by inserting a resistor across the C70 input.

The following figure shows a typical DC circuit, with battery ground detection, of contact input. The contact output has parallel impedance across it (represented by R1).

Figure 3-23: Typical contact input DC circuit

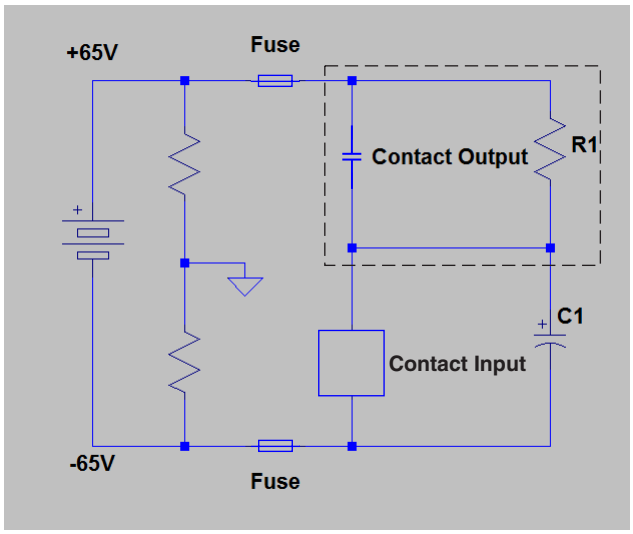

The presence of the impedance path (R1) across the contact output allows the stray (distributed) capacitance C1 to charge as shown, thus developing a voltage across the contact input enough to momentarily operate the input while the capacitance discharges in the presence of DC ground on the positive terminal of the battery.

The duration of the discharge depends on the value of the distributed capacitance, the initial voltage of the distributed capacitance, and the input impedance of the contact input. If the duration is greater than the debounce time setting, then the contact input operates.

The application example that follows describes how to mitigate this issue by connecting a resistor across the contact input, as shown in the next figure, or by adjusting the debounce time setting to a value greater than the discharge time to prevent spurious operation of the contact input only if the voltage (with output open) across the contact input due to trickle current is less than the threshold voltage. This operation of contact inputs also can be prevented by using the Auto-Burnish contact inputs or contact inputs with active impedance.

Figure 3-24: Contact input connected to a contact output with resistor (R2) across the input

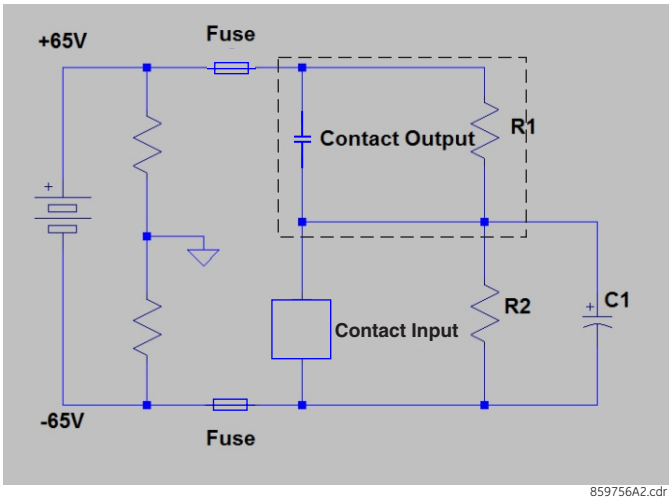

Application example

This example is for illustrative purposes only and the calculations present the worst-case scenario. In practice, the value of debounce time can be lower.

Contact input ON state impedance used in the calculation of the discharge period is based on the following table.

Table 3-4: Discharge period

Battery voltage (V)	Input impedance (kΩ)
130	50
250	97

Debounce time setting = 2 ms

Assume a stray capacitance of 0.1 µF.

Assume an initial voltage across the stray capacitance "Vinitial" = 19 V (Vthreshold - 65 V), where Vthreshold = 84 V. The initial voltage Vinitial depends on values of impedance of R1 and contact inputs when the contact input is OFF (non-activated state).

Therefore, discharge time constant (τ) =50 kΩ *0.1 µF = 5 ms.

Discharge period t is calculated from the following equation:

$$V_{threshold} = (V_{batt} - V_{Initial}) * e^{(-t/\tau)}$$

$$84 = -149 * e^{(t/0.005)} \qquad \textbf{Eq. 3-1}$$

$$T = -0.005 * \ln(84/149) = 0.0029 \text{ s}$$

Therefore, in this example the contact inputs operate.

To prevent this operation, the debounce time must be increased to 4 ms (set debounce time as per the following table) or insert a resistor less than or equal to "R" as calculated later.

Table 3-5: Typical debounce time setting

Stray capacitance (µF)	Battery voltage (V)	Debounce time (ms)
0.05	130	2
0.1	130	4
0.2	130	6
0.05	250	3
0.1	250	6 *

Stray capacitance (µF)	Battery voltage (V)	Debounce time (ms)
0.2	250	11

* Default debounce time on contact inputs is 6 ms.

The value of this resistor "R" is calculated as follows:

1. Determine the minimum voltage (V threshold) required to turn on the input. This is determined by direct measurement or referenced in the input specifications.
2. Calculate the resistance necessary to limit the voltage to 1/3 V threshold (when the contact is OFF, the non-activated state) as follows:

   $$R = (V_{threshold} / 3) / (2\ mA) \quad \textbf{Eq. 3-2}$$

   The 2 mA current is used in case the contact input is connected across the GE Form A contact output with voltage monitoring. Otherwise use the amperage of the active circuit connected to the contact input when its contact output is open and the voltage across the contact input is third trigger threshold to calculate the resistor value.
3. When the contact is ON (operate state), the battery voltage appears across the resistor. The wattage rating of the resistor is then:

   $$PR = 1.3 * (V_{batt})^2 / R\ Watts \quad \textbf{Eq. 3-3}$$

4. Applying the following equation to our example:

   $$R = 84\ V / 3 * (1 / 2\ mA) = 14\ k\Omega$$

   $$PR = 1.57\ Watts \quad \textbf{Eq. 3-4}$$

5. Calculating the voltage across the contact input with the Burden Resistor, Voltage across the contact Input:

   $$V_{resistor} = 2\ mA * 14\ Kohm = 28\ V$$

   $$V_{resistor} < \text{contact input threshold } (84\ V) \quad \textbf{Eq. 3-5}$$

In conclusion, in this example, the contact input does NOT operate falsely with the Burden Resistor across its input AND when a battery ground is present.

3.3.6.3 Use of contact inputs with auto-burnishing

The contact inputs sense a change of state of the external device contact based on the measured current. When external devices are located in a harsh industrial environment (either outdoor or indoor), their contacts can be exposed to various types of contamination. Normally, there is a thin film of insulating sulfidation, oxidation, or contaminates on the surface of the contacts, sometimes making it difficult or impossible to detect a change of state. This film must be removed to establish circuit continuity — an impulse of higher than normal current can accomplish this.

The contact inputs with auto-burnish create a high current impulse when the threshold is reached to burn off this oxidation layer as a maintenance to the contacts. Afterwards the contact input current is reduced to a steady-state current. The impulse has a five-second delay after a contact input changes state.

Figure 3-25: Current through contact inputs with auto-burnishing

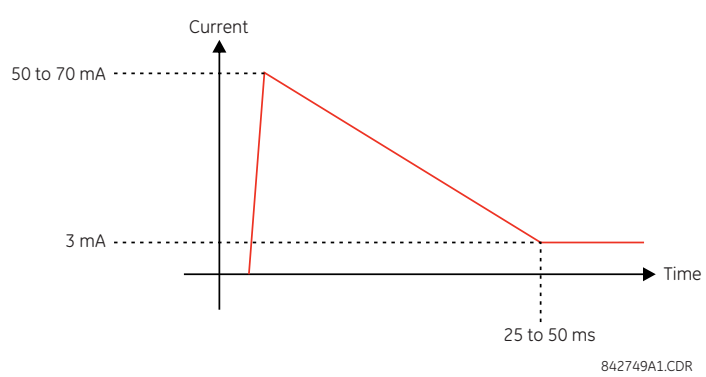

Regular contact inputs limit current to less than 3 mA to reduce station battery burden. In contrast, contact inputs with auto-burnishing allow currents up to 50 to 70 mA at the first instance when the change of state is sensed. Then, within 25 to 50 ms, this current is slowly reduced to 3 mA as indicated. The 50 to 70 mA peak current burns any film on the contacts, allowing for proper sensing of state changes. If the external device contact is bouncing, the auto-burnishing starts when external device contact bouncing is over.

Another important difference between the auto-burnishing input module and the regular input modules is that only two contact inputs have common ground, as opposed to four contact inputs sharing one common ground (see the Contact Input and Output Module Wiring diagrams). This is beneficial when connecting contact inputs to separate voltage sources. Consequently, the threshold voltage setting is also defined per group of two contact inputs.

The auto-burnish feature can be disabled or enabled using the DIP switches found on each daughter card. There is a DIP switch for each contact, for a total of 16 inputs.

Figure 3-26: Auto-burnish DIP switches

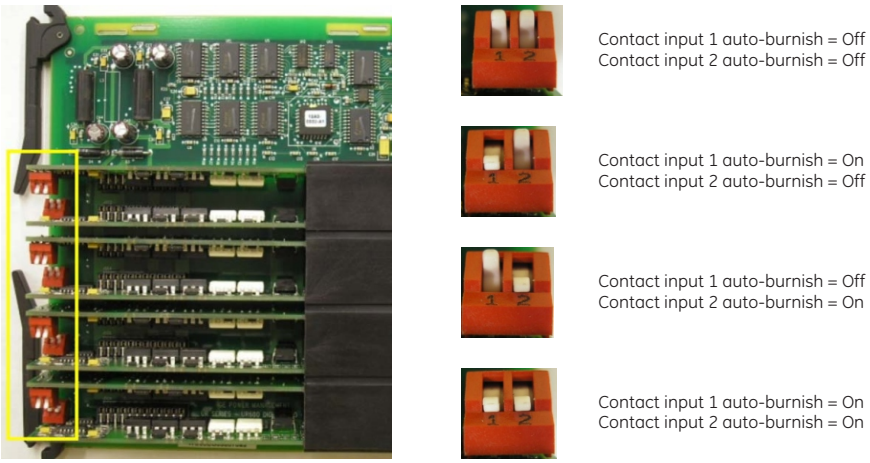

842751A1.CDR

The auto-burnish circuitry has an internal fuse for safety purposes. During regular maintenance, check the auto-burnish functionality using an oscilloscope.

3.3.6.4 Use of contact inputs with active impedance

Contact inputs can be susceptible to parasitic capacitance, caused by long cable runs affected by switching surges from external circuits. This can result in inadvertent activation of contact inputs with the external contact open. In this case, GE recommends using the contact I/O module with active impedance circuit.

Active impedance contact input can tolerate external cable capacitance of up to 0.2 µF, without entering the ON state for more than 2 ms. The contact input debounce time can still be set above 2 ms for added security to prevent contact input activations caused by external transient ON states.

An active impedance contact input is normally in Low impedance mode during OFF contact state (non-activated condition). During Low impedance state, contact input impedance is maintained at 10 K Ohms impedance to allow fast discharge of the stray capacitance of the long cables.

When the contact input voltage exceeds the set threshold, active impedance maintains 10 K Ohms impedance. If voltage starts rapidly decreasing, this indicates that stray capacitance is being discharged through the contact input. If, however, voltage stabilizes above the set threshold, the input impedance is switched to High impedance mode of 100 K Ohms. This value reduces the input current to <3 mA, and contact input switches to the ON state (operated state).

The figure shows the active impedance contact input V-I characteristic. Different thresholds with their corresponding characteristics are shown by color. The contact input is in the ON (operated) state if the input voltage is to the right of the colored threshold band (+/-10% tolerance), and the contact input is in the OFF (non-activated) state when input voltage is to the left of the band. A contact input is in LOW state during non-operated system condition, and actively switches to HIGH state upon detection of input voltage above the settable threshold.

Figure 3-27: Active impedance contact input V-I characteristic

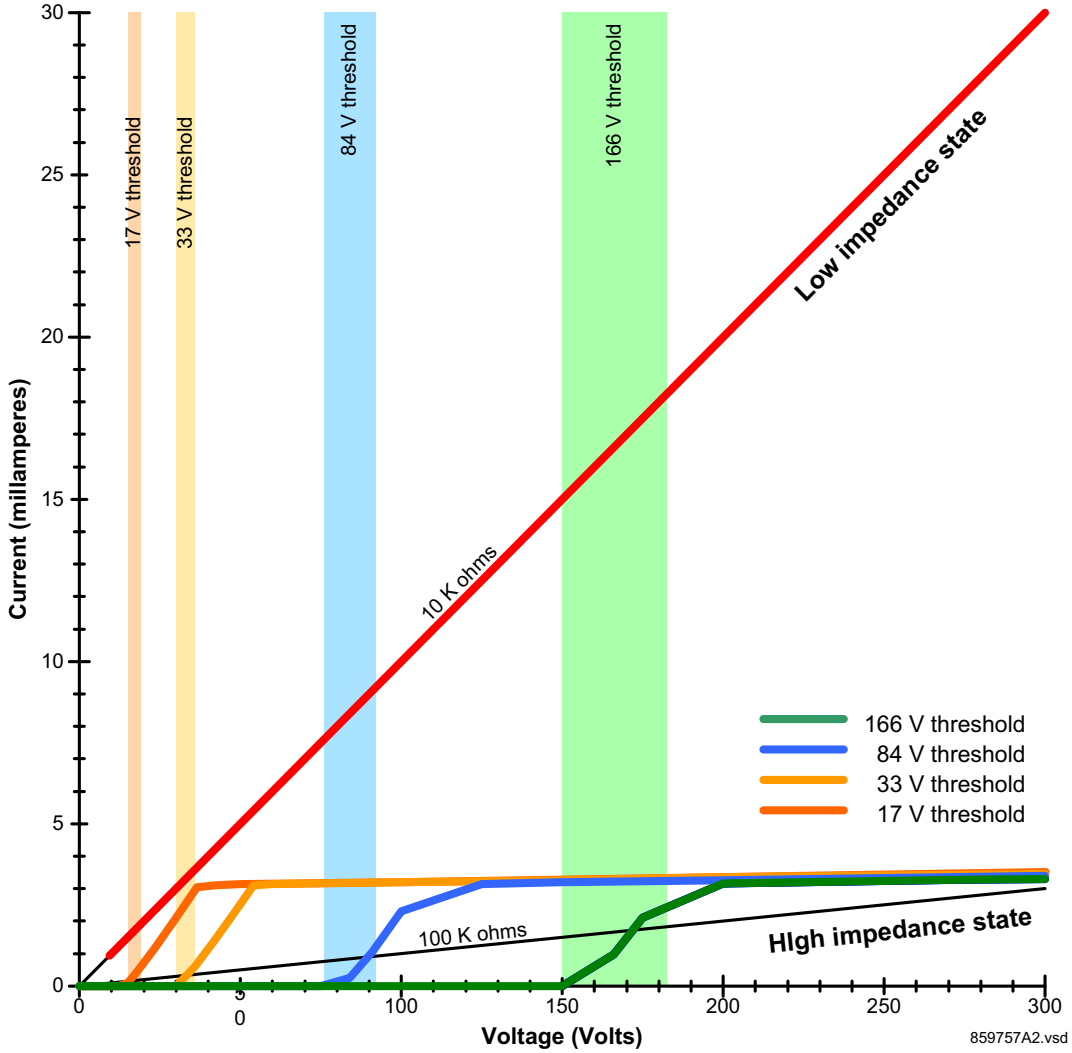

3.3.7 Transducer inputs and outputs

Transducer input modules receive input signals from external DCmA output transducers (DCmA In) or resistance temperature detectors (RTDs). Hardware and software are provided to receive signals from these external transducers and convert these signals into a digital format for use as required.

Transducer output modules provide DC current outputs in several standard DCmA ranges. Software is provided to configure virtually any analog quantity used in the relay to drive the analog outputs.

Each transducer input/output module has 24 terminal connections. These connections are arranged as three terminals per row over eight rows. A given row can be used for either inputs or outputs, with terminals in column "a" having positive polarity and terminals in column "c" having negative polarity. Since an entire row is used for a single input/output channel, the name of the channel is assigned using the module slot position and row number.

Each module also requires that a connection from an external ground bus be made to terminal 8b. The current outputs require a twisted-pair shielded cable, where the shield is grounded at one end only. The following figure illustrates the transducer module types (5A, 5C, 5D, 5E, and 5F) and channel arrangements that can be ordered for the relay.

NOTE

Where a tilde "~" symbol appears, substitute the slot position of the module.

Figure 3-28: Transducer input/output module wiring

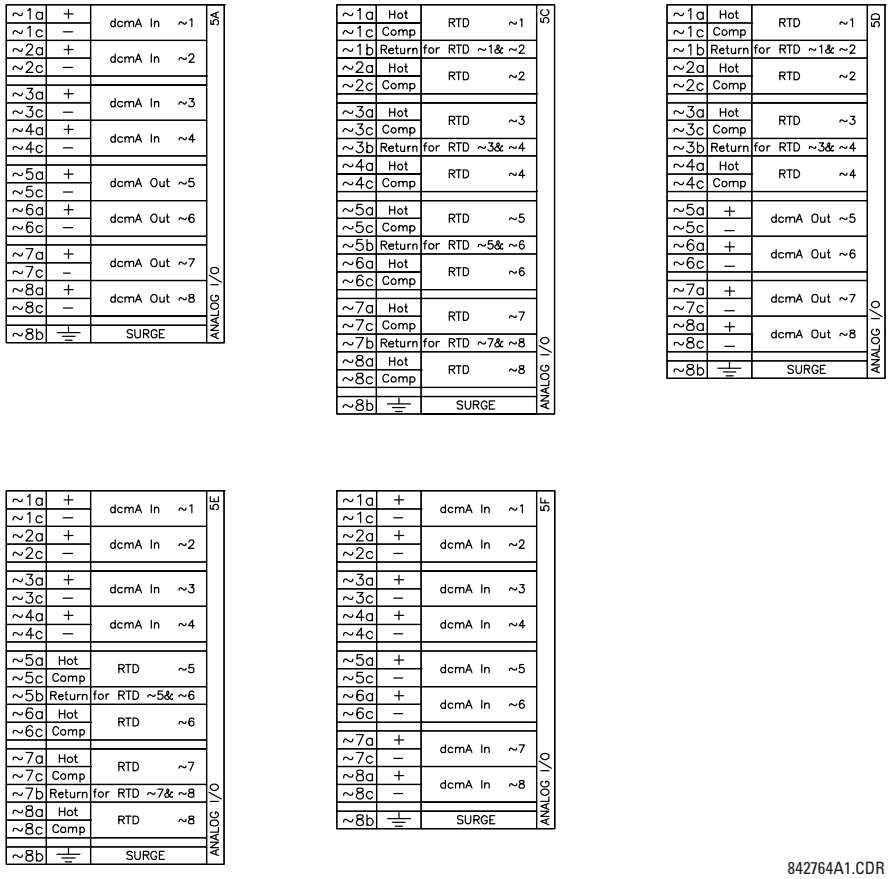

The following figure show how to connect RTDs.

Figure 3-29: RTD connections

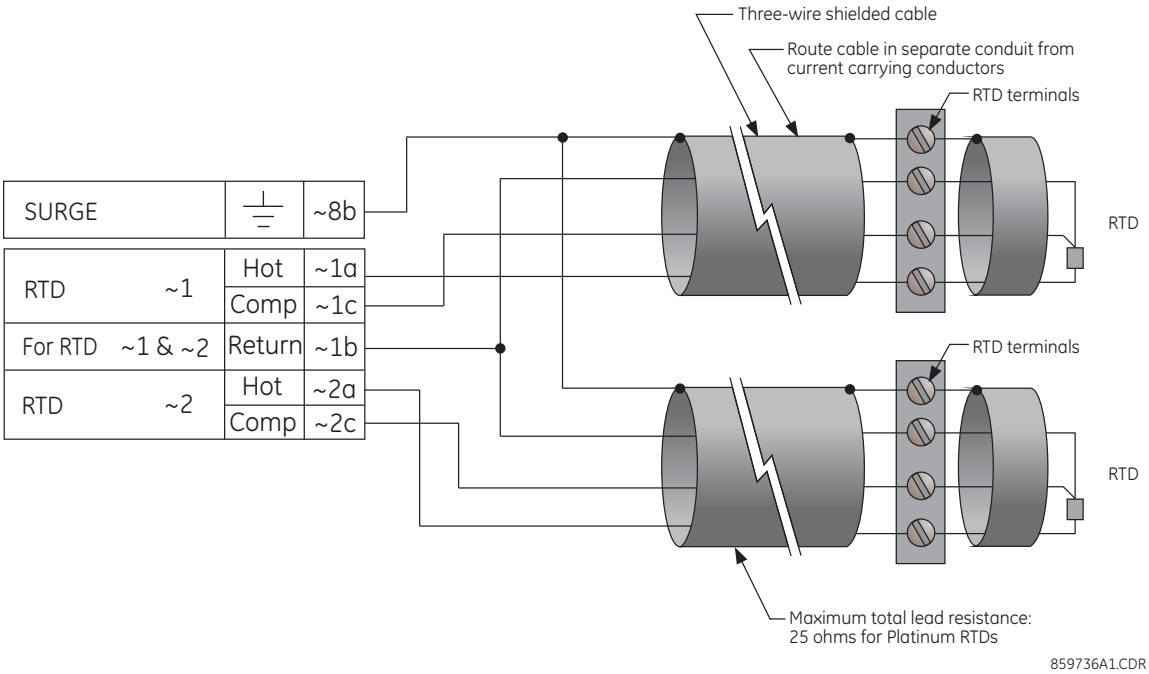

3.3.8 RS232 port

On the enhanced and basic front panels is a nine-pin RS232C serial port for programming with a computer. All that is required to use this interface is a computer running the EnerVista UR Setup software provided with the relay. Cabling for the RS232 port is shown in the following figure for the nine-pin connector on the UR and nine or 25-pin connector on a computer.

The baud rate for this port can be set, with a default of 115200 bps.

Figure 3-30: RS232 front panel port connection

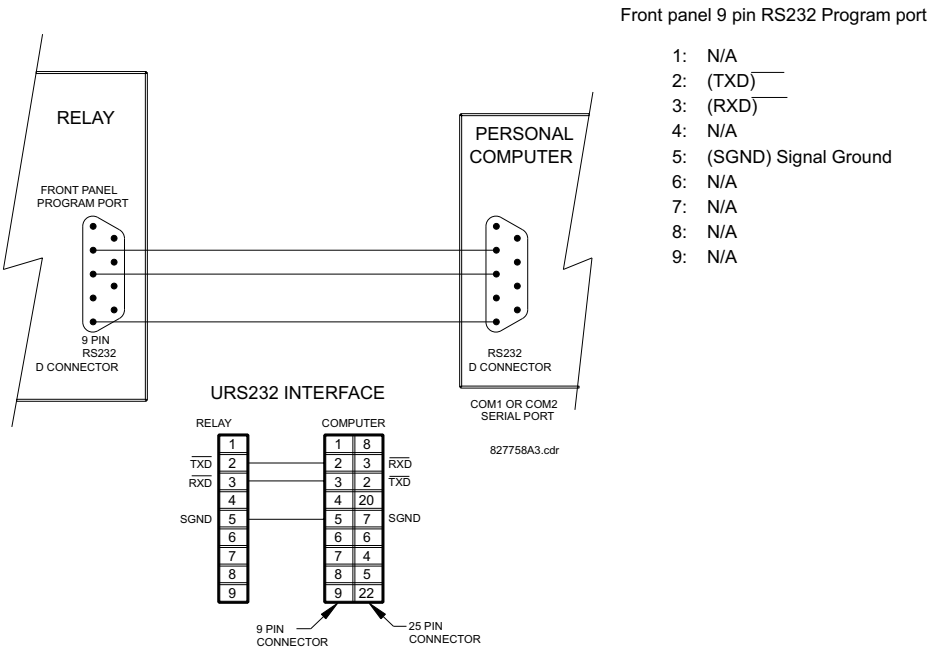

3.3.9 CPU communication ports

3.3.9.1 Overview

There is a rear RS485 communication port on the CPU module. The CPU module does not require a surge ground connection.

NOTE

For Sampled Value (SV) applications using a Process Bus Module with order code 85, 86, or 87 with IRIG-B for synchronization, follow the recommended cables and grounding connections.

Figure 3-31: CPU module communications wiring

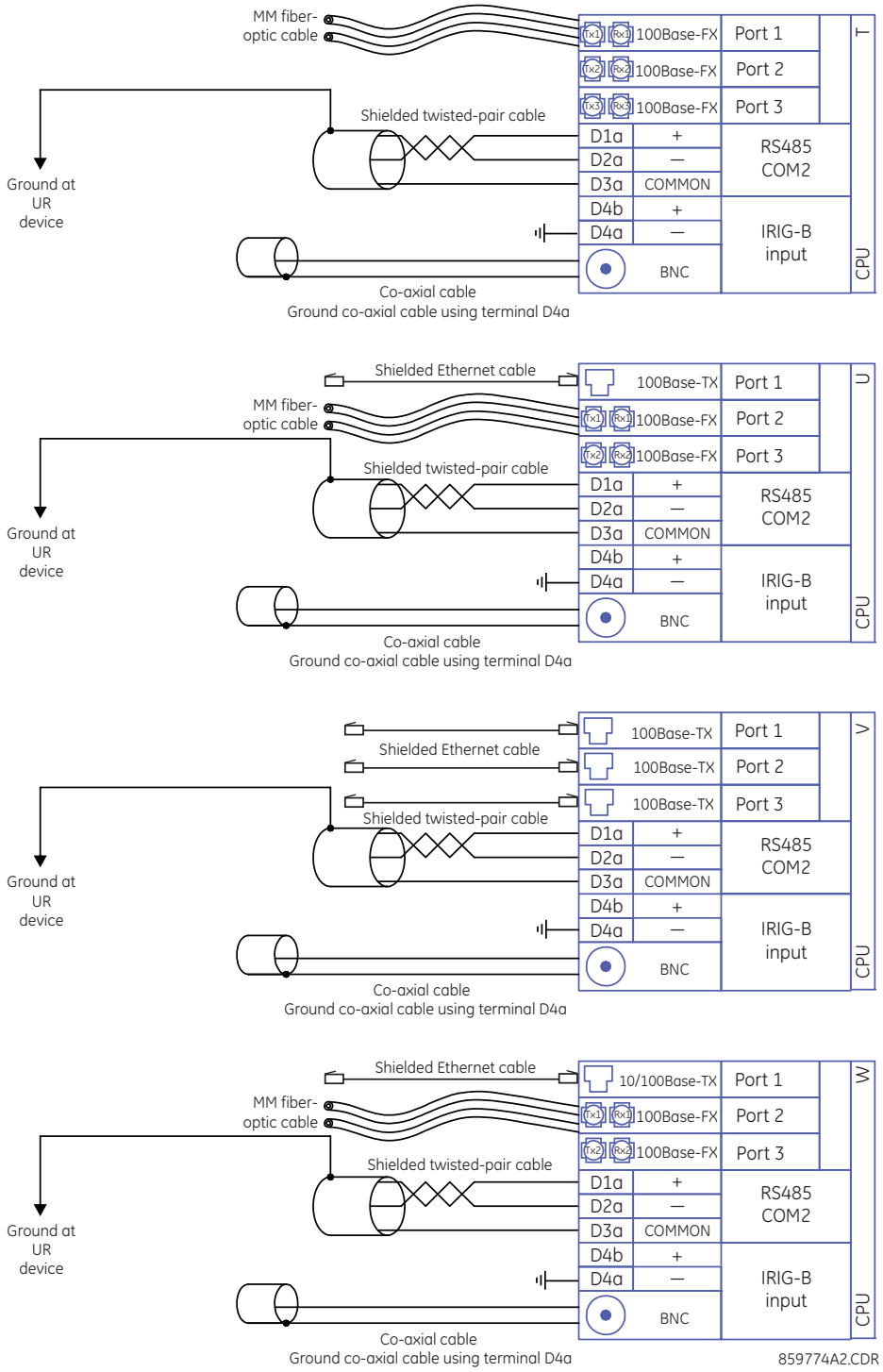

3.3.9.2 RS485 port

RS485 data transmission and reception are accomplished over a single twisted-pair wire with transmit and receive data alternating over the same two wires. Through the use of the port, continuous monitoring and control from a remote computer, SCADA system, or Power Line Carrier (PLC) is possible.

To minimize errors from noise, the use of shielded twisted-pair wire is recommended. Correct polarity must be observed. For instance, the relays must be connected with all RS485 "+" terminals connected together, and all RS485 "–" terminals connected together. Though data is transmitted over a two-wire twisted pair, all RS485 devices require a shared reference, or common voltage. This common voltage is implied to be a power supply common. Some systems allow the shield (drain wire) to be used as common wire and to connect directly to the C70 COM terminal (#3); others function correctly only if the common wire is connected to the C70 COM terminal, but insulated from the shield.

To avoid loop currents, ground the shield at only one point. If other system considerations require the shield to be grounded at more than one point, install resistors (typically 100 ohms) between the shield and ground at each grounding point. Each relay needs to be daisy-chained to the next one in the link. A maximum of 32 relays can be connected in this manner without exceeding driver capability. For larger systems, additional serial channels must be added. It is also possible to use commercially available repeaters to have more than 32 relays on a single channel. Avoid star or stub connections entirely.

Lightning strikes and ground surge currents can cause large momentary voltage differences between remote ends of the communication link. For this reason, surge protection devices are provided internally at both communication ports. An isolated power supply with an optocoupled data interface also acts to reduce noise coupling. To ensure maximum reliability, ensure that all equipment has similar transient protection devices installed.

Terminate both ends of the RS485 circuit with an impedance as shown in the figure.

Figure 3-32: RS485 serial connection

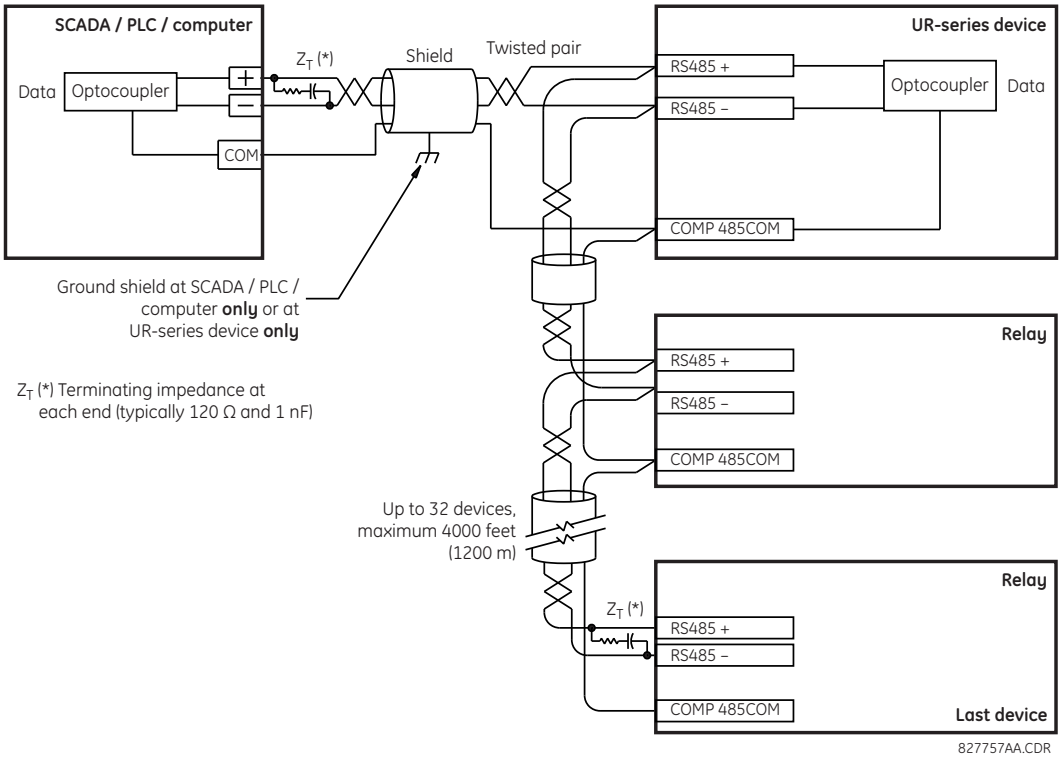

3.3.9.3 100Base-FX fiber optic ports

The fiber-optic communication ports allow for fast and efficient communications between relays at 100 Mbps. Optical fiber can be connected to the relay supporting a wavelength of 1310 nm in multimode.

Ensure that the dust covers are installed when the fiber is not in use. Dirty or scratched connectors can lead to high losses on a fiber link.

3.3.10 IRIG-B

There is a round IRIG-B connector at the back of the CPU module, marked "IN." Use is optional.

IRIG-B is a standard time code format that allows stamping of events to be synchronized among connected devices. The IRIG-B code allows time accuracies of up to 100 ns. The GE MultiSync 100 1588 GPS Clock as well as third-party equipment are available for generating the IRIG-B signal. This equipment can use a global positioning system (GPS) satellite system to obtain the time reference so that devices at different geographic locations can be synchronized. The IRIG time code formats are serial, pulse width-modulated codes that can be either DC level shifted or amplitude modulated (AM). Using IRIG-B input, the C70 operates an internal oscillator with 1 µs resolution and accuracy.

Figure 3-33: Options for IRIG-B connection

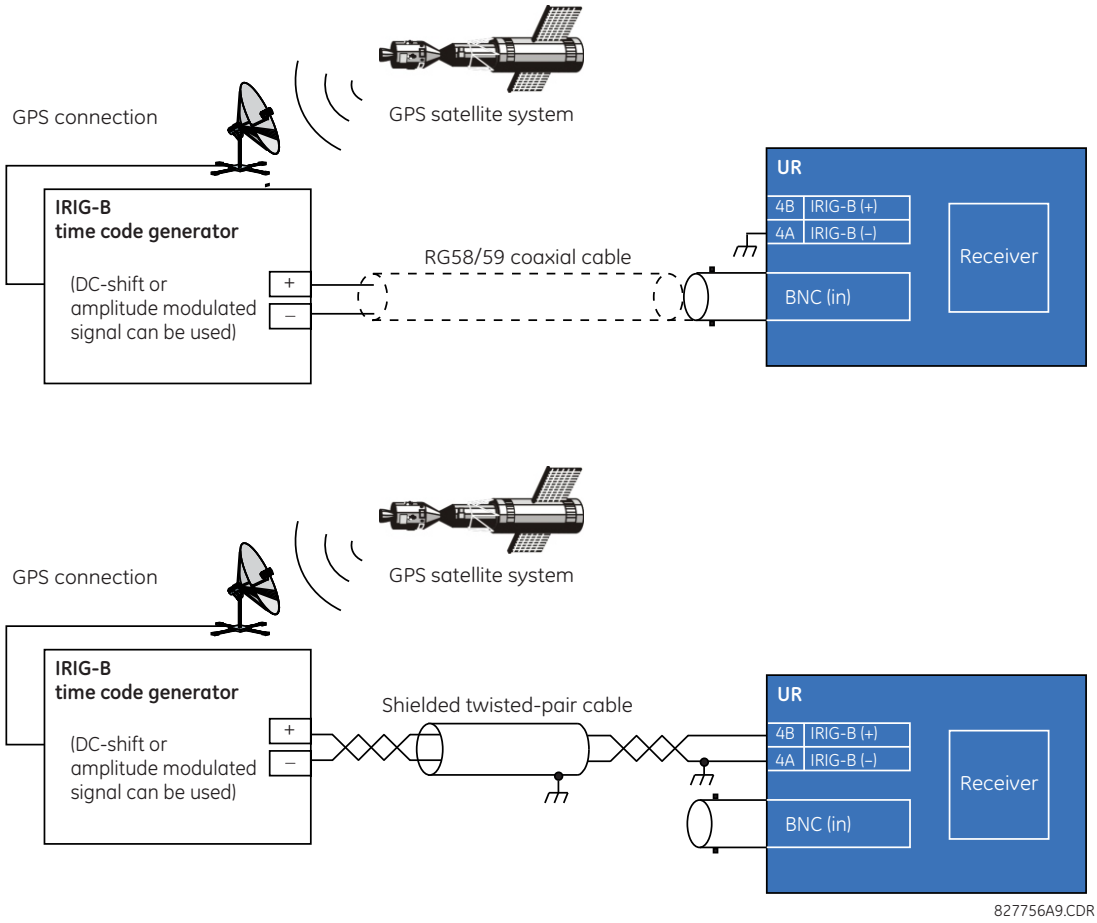

NOTE

Using an amplitude-modulated receiver causes errors up to 1 ms in event time stamping.

3.4 Direct input and output communications

3.4.1 Description

The direct inputs and outputs feature makes use of the type 7 series of communications modules and allows direct messaging between UR devices. The communications modules are outlined in the table later in this section.

The communications channels are normally connected in a ring configuration, as shown in the following figure. The transmitter of one module is connected to the receiver of the next module. The transmitter of this second module is then connected to the receiver of the next module in the ring. This is continued to form a communications ring. The figure illustrates a ring of four UR-series relays with the following connections: UR1-Tx to UR2-Rx, UR2-Tx to UR3-Rx, UR3-Tx to UR4-Rx, and UR4-Tx to UR1-Rx. A maximum of 16 URs can be connected in a single ring.

Figure 3-34: Direct input and output single-channel connection

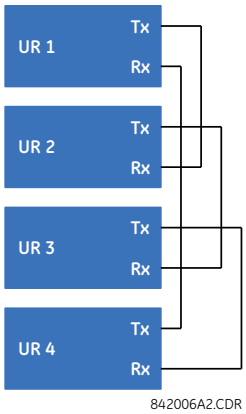

Inter-relay communication (IRC) modules with protocol C37.94 and G.703 are designed for back-to-back communication connections, so the ring configuration shown in the previous figure does not apply. To establish inter-relay communication in more than two URs, you need to have a two-channel IRC module and enable the **DIRECT I/O CHANNEL CROSSOVER** setting in all relays, as shown in the next figure. This configuration can be expanded to 16 URs, and this configuration does not provide a redundancy ring since both channels are made into a single ring by the channel crossover function. As per the figure entitled Typical Pin Interconnection between Two G.703 Interfaces later in this chapter, the clock is supplied typically by multiplexer (MUX) and all URs are in Loop Timing Mode. If there is no MUX, then UR1 and UR3 can be in Internal Timing Mode and UR2 and UR4 can be in Loop Timing Mode. That is, connected channels must have opposite timing modes.

Figure 3-35: Ring configuration for C37.94 module (concept also applies to G.703)

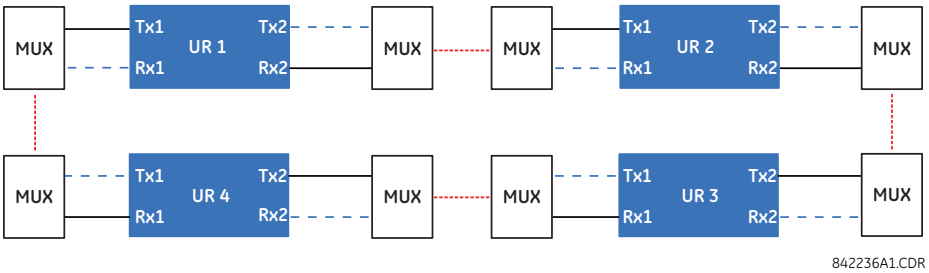

The interconnection for dual-channel type 7 communications modules is shown as follows. Two-channel modules allow for a redundant ring configuration. That is, two rings can be created to provide an additional independent data path. The required connections are: UR1-Tx1 to UR2-Rx1, UR2-Tx1 to UR3-Rx1, UR3-Tx1 to UR4-Rx1, and UR4-Tx1 to UR1-Rx1 for the first ring; and UR1-Tx2 to UR4-Rx2, UR4-Tx2 to UR3-Rx2, UR3-Tx2 to UR2-Rx2, and UR2-Tx2 to UR1-Rx2 for the second ring.

Figure 3-36: Direct input and output dual-channel connection

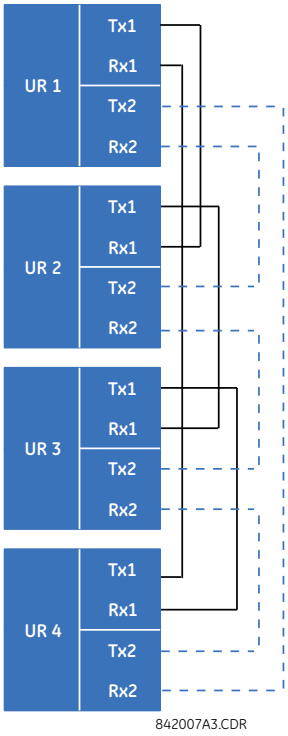

The following figure shows the connection for three UR-series relays using two independent communication channels. UR1 and UR3 have single type 7 communication modules; UR2 has a dual-channel module. The two communication channels can be of different types, depending on the type 7 modules used. To allow the direct input and output data to cross-over from channel 1 to channel 2 on UR2, set the **DIRECT I/O CHANNEL CROSSOVER** setting to "Enabled" on UR2. This forces UR2 to forward messages received on Rx1 out Tx2, and messages received on Rx2 out Tx1.

Figure 3-37: Direct input and output single/dual channel combination connection

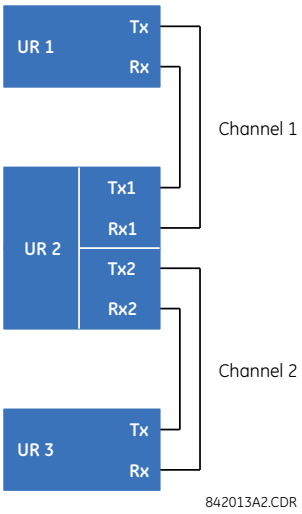

The inter-relay communications modules are available with several interfaces and some are outlined here in more detail. Those that apply depend on options purchased. The options are outlined in the Inter-Relay Communications section of the Order Code tables in Chapter 2. All of the fiber modules use ST type connectors.

3

3.4.2 Fiber: LED and ELED transmitters

The following figure shows the configuration for the 7A, 7B, 7C, 7H, 7I, and 7J fiber-only modules.

Figure 3-38: LED and ELED fiber modules

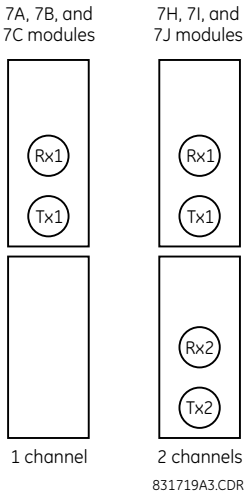

3.4.3 G.703 interface

3.4.3.1 Description

G.703 is an International Telecommunications Union (ITU) standard for the transmission of data and voice signals. Modules 7R (one channel) and 7S (two channels) apply.

The following figure shows the 64K ITU G.703 co-directional interface configuration. This is module 7S.

The G.703 module is fixed at 64 kbps. The **SETTINGS ⇨ PRODUCT SETUP ⇨⇩ DIRECT I/O ⇨ DIRECT I/O DATA RATE** setting is not applicable to this module.

AWG 24 twisted shielded pair wiring is recommended for external connections, with the shield grounded only at one end. Connecting the shield to pin X1a or X6a grounds the shield since these pins are connected internally to ground. Thus, if pin X1a or X6a is used to ground the shield at one end, do not ground the shield at the other end. This interface module is protected by surge suppression devices.

Figure 3-39: G.703 interface configuration

7S	G.703 channel 1	Shield	~1a
		Tx –	~1b
		Rx –	~2a
		Tx +	~2b
		Rx +	~3a
	Surge	⏚	~3b
G.703 communications	G.703 channel 2	Shield	~6a
		Tx –	~6b
		Rx –	~7a
		Tx +	~7b
		Rx +	~8a
	Surge	⏚	~8b

842773A3.CDR

The following figure shows the typical pin interconnection between two G.703 interfaces. For the actual physical arrangement of these pins, see the Rear Terminal Layout section earlier in this chapter. All pin interconnections are to be maintained for a connection to a multiplexer.

Figure 3-40: Typical pin interconnection between two G.703 interfaces

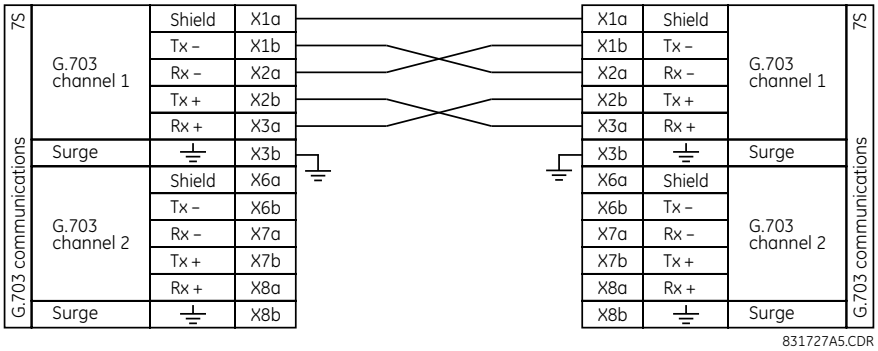

NOTE

Pin nomenclature differs from one manufacturer to another. It is not uncommon to see pinouts numbered TxA, TxB, RxA, and RxB. In such cases, assume that "A" is equivalent to "+" and "B" is equivalent to "–."

3.4.3.2 G.703 selection switch procedures

1. With the power to the relay off, remove the G.703 module (7R or 7S) as follows. Record the original location of the module to help ensure that the same or replacement module is inserted into the correct slot.
2. Simultaneously pull the ejector/inserter clips located at the top and at the bottom of each module in order to release the module for removal. (For more information on accessing modules, see the Maintenance chapter.)
3. Remove the module cover screw.
4. Remove the top cover by sliding it towards the rear and then lift it upwards.
5. Set the timing selection switches (channels 1 and 2) to the required timing modes.
6. Replace the top cover and the cover screw.
7. Re-insert the G.703 module. Take care to ensure that the correct module type is inserted into the correct slot position. The ejector/inserter clips located at the top and bottom of each module must be in the disengaged position as the module is inserted smoothly into the slot. Once the clips have cleared the raised edge of the chassis, engage the clips simultaneously. When the clips have locked into position, the module is inserted fully.

3

Figure 3-41: G.703 timing selection switch setting

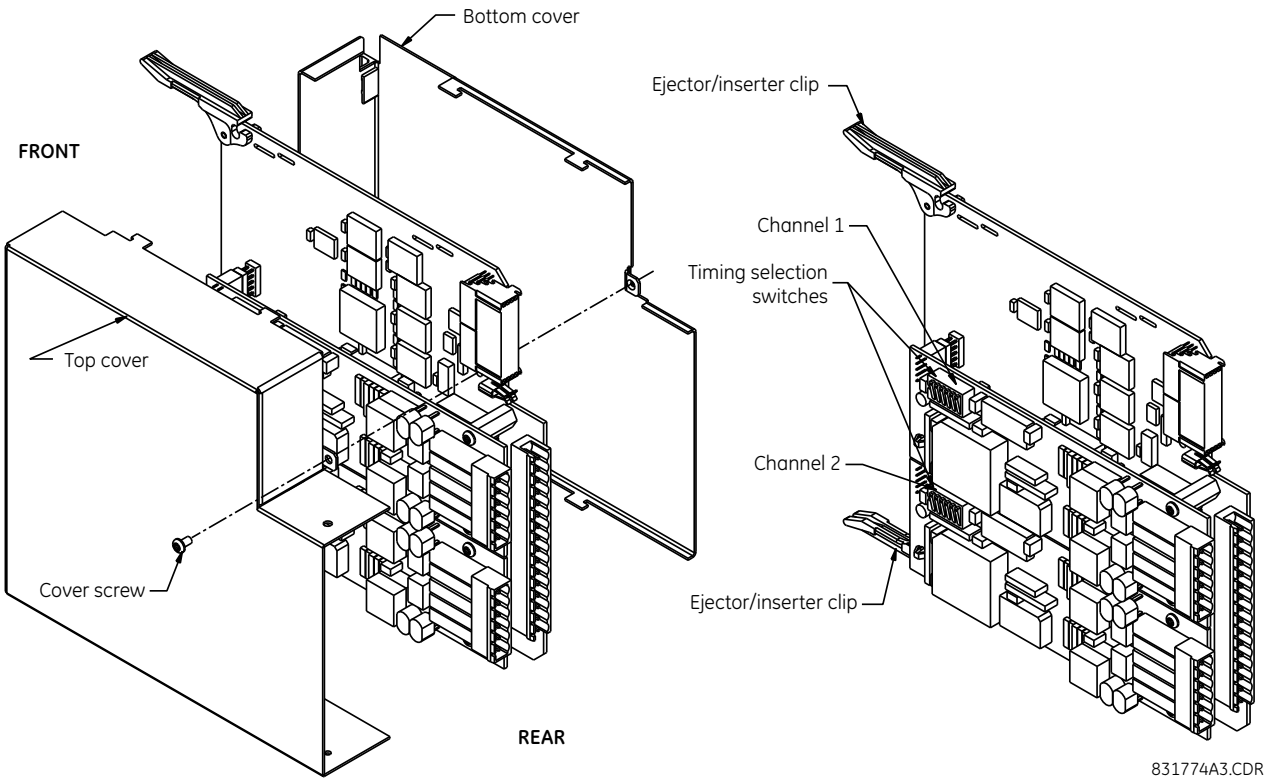

Table 3-6: G.703 timing selections

Switches	Function
S1	OFF → octet timing disabled ON → octet timing 8 kHz
S5 and S6	S5 = OFF and S6 = OFF → loop timing mode S5 = ON and S6 = OFF → internal timing mode S5 = OFF and S6 = ON → minimum remote loopback mode S5 = ON and S6 = ON → dual loopback mode

3.4.3.3 G.703 octet timing

If octet timing is enabled (ON), this 8 kHz signal is asserted during the violation of bit 8 (LSB) necessary for connecting to higher order systems. When C70s are connected back-to-back, octet timing is disabled (OFF).

3.4.3.4 G.703 timing modes

There are two timing modes for the G.703 module: internal timing mode and loop timing mode (default).

- **Internal Timing Mode** — The system clock is generated internally. Therefore, set the G.703 timing selection to internal timing mode for back-to-back (UR-to-UR) connections. For back-to-back connections, set octet timing (S1 = OFF) and timing mode to internal timing (S5 = ON and S6 = OFF).
- **Loop Timing Mode** — The system clock is derived from the received line signal. Therefore, set the G.703 timing selection to loop timing mode for connections to higher order systems. For connection to a higher order system (UR-to-multiplexer, factory defaults), set to octet timing (S1 = ON) and set timing mode to loop timing (S5 = OFF and S6 = OFF).

The switch settings for the internal and loop timing modes are shown.

Figure 3-42: Switches

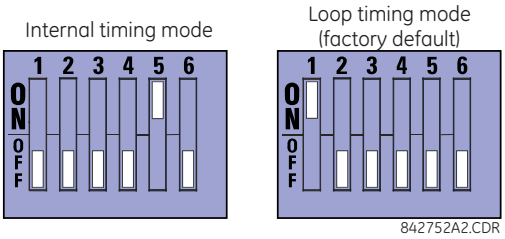

3.4.3.5 G.703 test modes

In *minimum remote loopback mode*, the multiplexer is enabled to return the data from the external interface without any processing to assist in diagnosing G.703 line-side problems irrespective of clock rate. Data enters from the G.703 inputs, passes through the data stabilization latch that also restores the proper signal polarity, passes through the multiplexer, and then returns to the transmitter. The differential received data is processed and passed to the G.703 transmitter module after which point the data is discarded. The G.703 receiver module is fully functional and continues to process data and passes it to the differential Manchester transmitter module. Since timing is returned as it is received, the timing source is expected to be from the G.703 line side of the interface.

Figure 3-43: G.703 minimum remote loopback mode

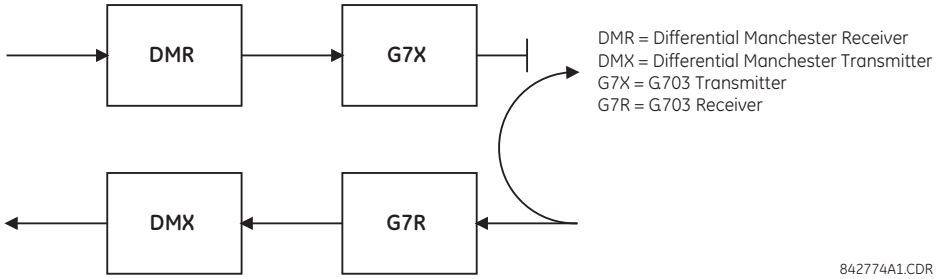

In *dual loopback mode*, the multiplexers are active and the functions of the circuit are divided into two with each receiver/transmitter pair linked together to deconstruct and then reconstruct their respective signals. Differential Manchester data enters the Differential Manchester receiver module and then is returned to the differential Manchester transmitter module. Likewise, G.703 data enters the G.703 receiver module and is passed through to the G.703 transmitter module to be returned as G.703 data. Because of the complete split in the communications path and because, in each case, the clocks are extracted and reconstructed with the outgoing data, in this mode there must be two independent sources of timing. One source lies on the G.703 line side of the interface while the other lies on the differential Manchester side of the interface.

Figure 3-44: G.703 dual loopback mode

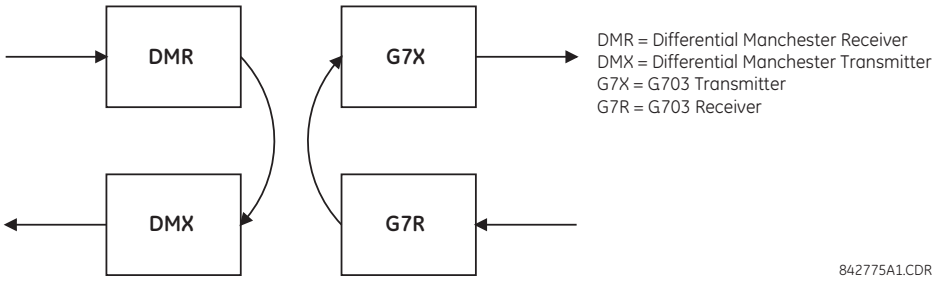

3.4.4 RS422 interface

3.4.4.1 Description

There are two RS422 inter-relay communications modules available: single-channel (module 7T) and dual-channel (module 7W). The modules can be configured to run at 64 kbps or 128 kbps. AWG 20 to 24 twisted shielded pair cable is recommended for external connections. These modules are protected by optically-isolated surge suppression devices.

The shield pins (6a and 7b) are connected internally to the ground pin (8a). Proper shield termination is as follows:

- Site 1 — Terminate shield to pins 6a or 7b or both
- Site 2 — Terminate shield to COM pin 2b

Match the clock terminating impedance with the impedance of the line.

3

Figure 3-45: RS422 interface connections

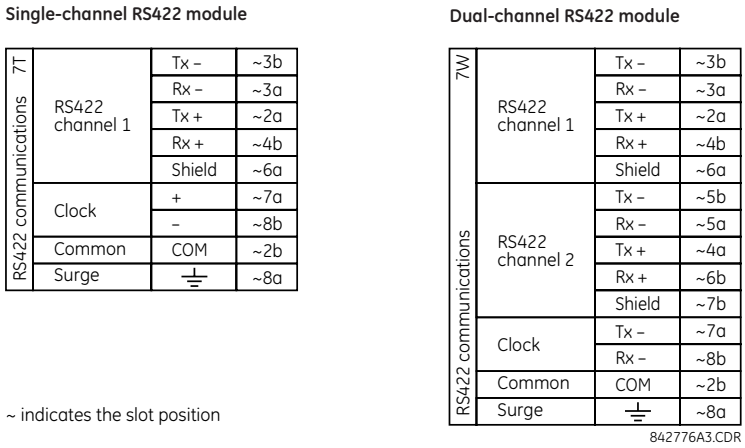

The following figure shows the typical pin interconnection between two single-channel RS422 interfaces installed in slot W. All pin interconnections are to be maintained for a connection to a multiplexer.

Figure 3-46: Typical pin interconnect between two RS422 interfaces

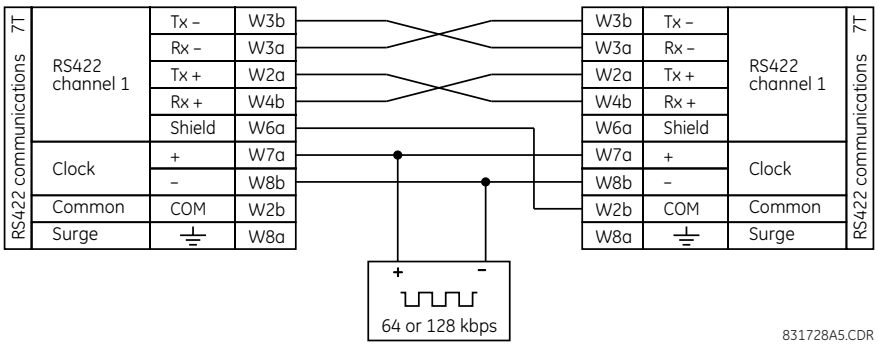

3.4.4.2 Two-channel application via multiplexers

The RS422 interface can be used for single-channel or two-channel applications over SONET/SDH or multiplexed systems. When used in single-channel applications, the RS422 interface links to higher-order systems in a typical way, observing transmit (Tx), receive (Rx), and send timing (ST) connections. However, when used in two-channel applications, certain criteria must be followed since there is one clock input for the two RS422 channels. The system functions correctly when the following connections are observed and your data module has a terminal timing feature. Terminal timing is a common feature in most synchronous data units that allows the module to accept timing from an external source. Using the terminal timing feature, two-channel applications can be achieved if these connections are followed: the send timing

outputs from the multiplexer (data module 1) connects to the clock inputs of the UR RS422 interface in the usual way. In addition, the send timing outputs of data module 1 are also paralleled to the terminal timing inputs of data module 2. By using this configuration, the timing for both data modules and both UR RS422 channels is derived from a single clock source. As a result, data sampling for both of the UR RS422 channels is synchronized via the send timing leads on data module 1, shown as follows. If the terminal timing feature is not available or this type of connection is not wanted, the G.703 interface is a viable option that does not impose timing restrictions.

Figure 3-47: Timing configuration for RS422 two-channel, three-terminal application

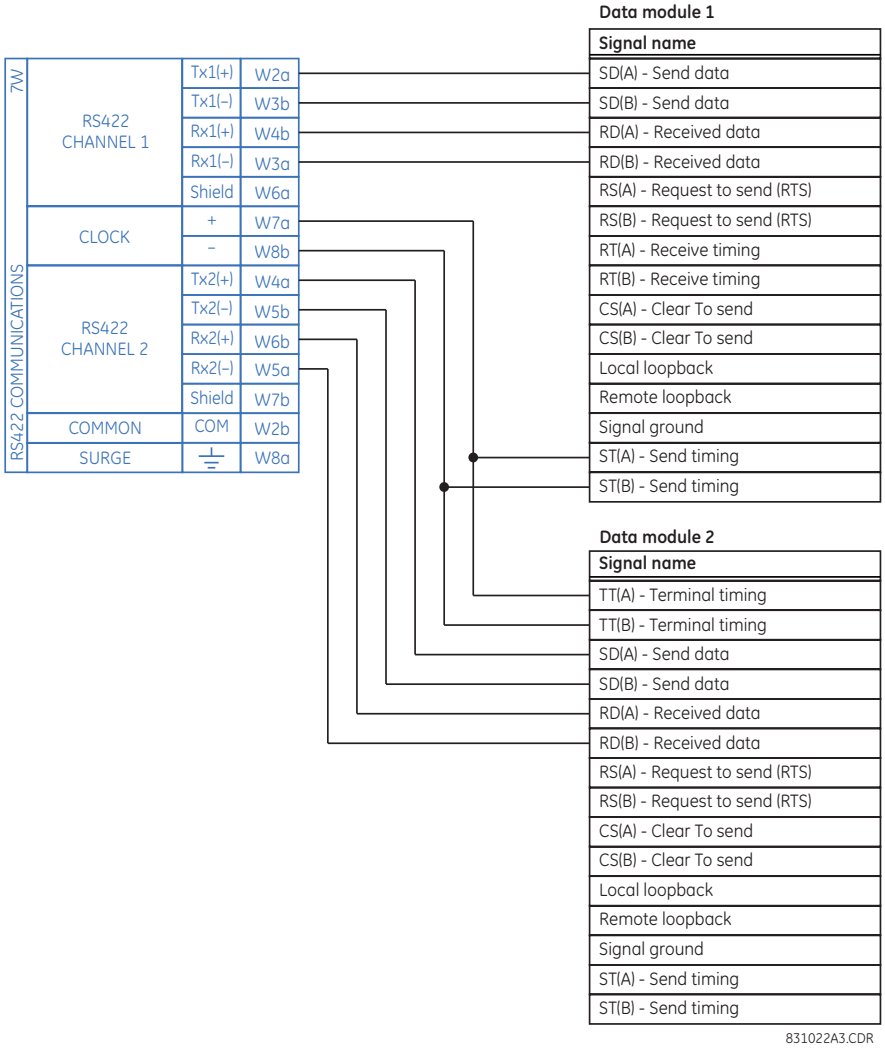

Data module 1 provides timing to the C70 RS422 interface via the ST(A) and ST(B) outputs. Data module 1 also provides timing to data module 2 TT(A) and TT(B) inputs via the ST(A) and AT(B) outputs. The data module pin numbers have been omitted in the figure because they vary by manufacturer.

3.4.4.3 Transmit timing

The RS422 interface accepts one clock input for transmit timing. It is important that the rising edge of the 64 kHz transmit timing clock of the multiplexer interface is sampling the data in the center of the transmit data window. Therefore, it is important to confirm clock and data transitions to ensure proper system operation. For example, the following figure shows the positive edge of the Tx clock in the center of the Tx data bit.

Figure 3-48: Clock and data transitions

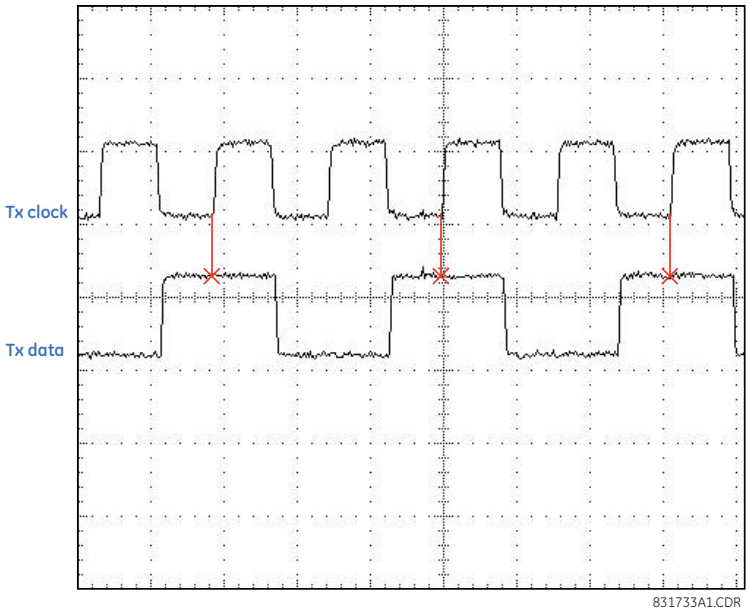

3.4.4.4 Receive timing

The RS422 interface utilizes NRZI-MARK modulation code and therefore does not rely on an Rx clock to recapture data. NRZI-MARK is an edge-type, invertible, self-clocking code.

To recover the Rx clock from the data-stream, an integrated digital phase lock loop (DPLL) circuit is utilized. The DPLL is driven by an internal clock, which is 16-times over-sampled, and uses this clock along with the data-stream to generate a data clock that can be used as the serial communication controller (SCC) receive clock.

3.4.5 IEEE C37.94 interface

IEEE C37.94 is a standard interface between teleprotection equipment and digital multiplexers.

The UR-series IEEE C37.94 modules (module types 2I, 2J, 76, and 77) are designed to interface with IEEE C37.94 compliant digital multiplexers or an IEEE C37.94 compliant interface converter for use with direct input and output applications. The IEEE C37.94 standard defines a point-to-point optical link for synchronous data between a multiplexer and a teleprotection device. Data speed is typically 64 kbps, but the standard provides for speeds up to 64*n* kbps, where n = 1, 2,..., 12. The UR-series C37.94 communication modules are either 64 kbps (with n fixed at 1) or 128 kbps (with n fixed at 2). The frame is a valid International Telecommunications Union (ITU-T) recommended G.704 pattern from the standpoint of framing and data rate. The frame is 256 bits and is repeated at a frame rate of 8000 Hz, with a resultant bit rate of 2048 kbps.

The specifications for the module are as follows:

- IEEE standard — C37.94 for 2 × 64 kbps optical fiber interface (for 76 and 77 modules)
- Fiber-optic cable type — 50 nm or 62.5 µm core diameter optical fiber
- Fiber-optic mode — multimode
- Fiber-optic cable length — up to 2 km
- Fiber-optic connector — type ST
- Wavelength — 820 ±40 nm
- Connection — as per all fiber-optic connections, a Tx-to-Rx connection is required

The UR-series C37.94 module can be connected directly to any compliant digital multiplexer that supports the IEEE C37.94 standard. The figure shows the concept.

Figure 3-49: IEEE C37.94 connection to compliant digital multiplexer

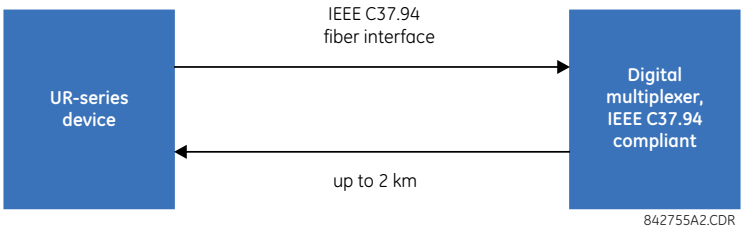

The UR-series C37.94 communication module can be connected to the electrical interface (G.703, RS422, or X.21) of a non-compliant digital multiplexer via an optical-to-electrical interface converter that supports the IEEE C37.94 standard. The following figure shows the concept.

Figure 3-50: IEEE C37.94 connection to non-compliant digital multiplexer

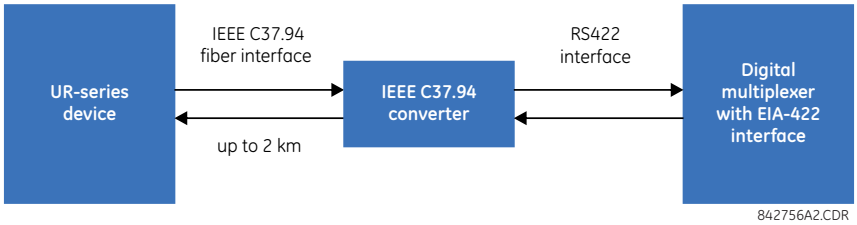

In 2008, GE Grid Solutions released revised modules 76 and 77 for C37.94 communication to enable multi-ended fault location functionality with firmware 5.60 release and higher. All modules 76 and 77 shipped since the change support this feature and are fully backward compatible with firmware releases below 5.60. For customers using firmware release 5.60 and higher, the module can be identified with "Rev D" printed on it and is to be used on all ends of C70 communication for two and three terminal applications. Failure to use it at all ends results in intermittent communication alarms. For customers using firmware revisions below 5.60, it is not required to match the revision of the modules installed.

The UR-series C37.94 communication module has six switches to set the clock configuration. The following figure shows the functions of these control switches.

Figure 3-51: Switches

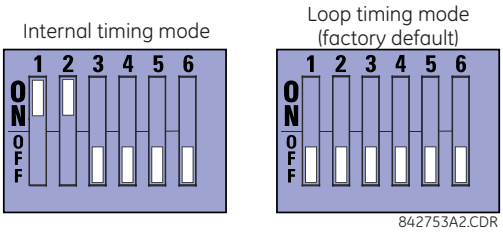

For the internal timing mode, the system clock is generated internally. Therefore, set the timing switch selection to internal timing for relay 1 and loop timed for relay 2. There must be only one timing source configured.

For the looped timing mode, the system clock is derived from the received line signal. Therefore, set the timing selection to loop timing mode for connections to higher order systems.

To remove the IEEE C37.94 communications module cover and set the switches:

1. With power to the relay off, remove the IEEE C37.94 module (type 2I, 2J, 76, or 77 module) as follows. Record the original location of the module to help ensure that the same or replacement module is inserted into the correct slot.
2. Simultaneously pull the ejector/inserter clips located at the top and bottom of each module in order to release the module for removal.
3. Remove the module cover screw.
4. Remove the top cover by sliding it towards the rear and then lift it upwards.

5. Set the timing selection switches (channels 1 and 2) to the required timing modes (see description earlier).
6. Replace the top cover and the cover screw.
7. Re-insert the IEEE C37.94 module. Take care to ensure that the correct module type is inserted into the correct slot position. The ejector/inserter clips located at the top and at the bottom of each module must be in the disengaged position as the module is inserted smoothly into the slot. Once the clips have cleared the raised edge of the chassis, engage the clips simultaneously. When the clips have locked into position, the module is inserted fully.

Figure 3-52: IEEE C37.94 timing selection switch setting

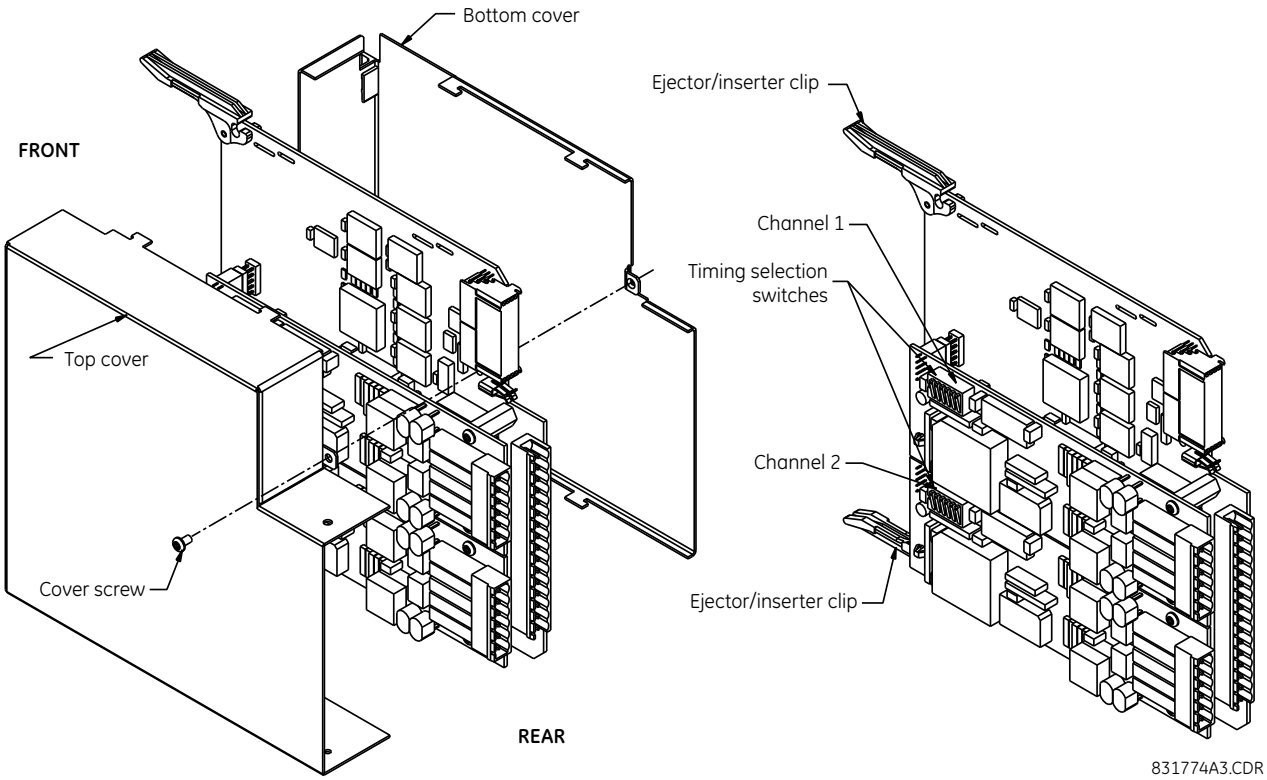

Modules shipped since January 2012 have status LEDs that indicate the status of the DIP switches, as shown in the following figure.

Figure 3-53: Status LEDs

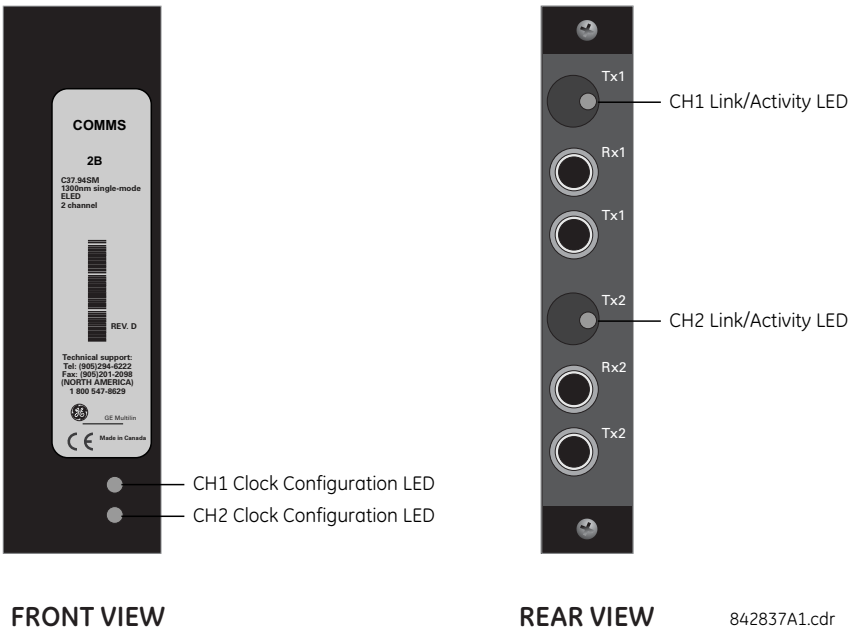

The clock configuration LED status is as follows:

- Flashing green — loop timing mode while receiving a valid data packet
- Flashing yellow — internal mode while receiving a valid data packet
- Solid red — (switch to) internal timing mode while not receiving a valid data packet

The link/activity LED status is as follows:

- Flashing green — FPGA is receiving a valid data packet
- Solid yellow — FPGA is receiving a "yellow bit" and remains yellow for each "yellow bit"
- Solid red — FPGA is not receiving a valid packet or the packet received is invalid

3.5 Activate relay

The relay is in the default “Not Programmed” state when it leaves the factory. When powered up successfully, looking at the front panel, the "Trouble" LED is on and the "In Service" LED is off. The relay in the “Not Programmed” state blocks signaling of any output relay. These conditions remain until the relay is explicitly put into “Programmed” state.

RELAY SETTINGS: **Not Programmed**	When the relay is powered up, the "Trouble LED" is on, the "In Service" LED is off, and this message displays, indicating that the relay is in the "Not Programmed" state and is safeguarding (output relays blocked) against the installation of a relay whose settings have not been entered. This message remains until the relay is explicitly put into "Programmed" state.

The relay can be activated on the front panel or in the EnerVista software.

To activate the relay using the front panel:

1. Press the **MENU** key until the **SETTINGS** header flashes momentarily and the **PRODUCT SETUP** message displays.
2. Press the **MESSAGE** right arrow until the **SECURITY** message displays.
3. Press the **MESSAGE** down arrow until the **INSTALLATION** message displays.
4. Press the **MESSAGE** right arrow until the **RELAY SETTINGS: Not Programmed** message displays.

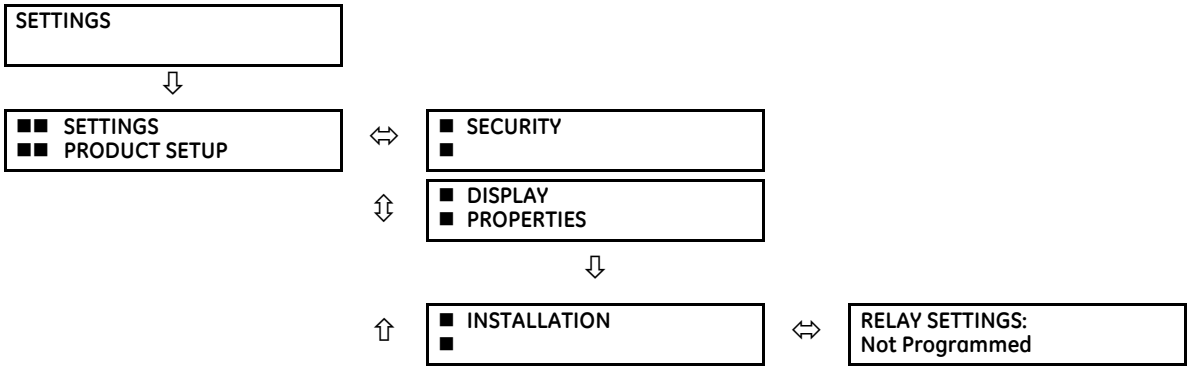

5. After the **RELAY SETTINGS: Not Programmed** message displays, press a **VALUE** key to change the selection to "Programmed."
6. Press the **ENTER** key to save the change.

7. When the "NEW SETTING HAS BEEN STORED" message appears, the relay is in "Programmed" state and the "In Service" LED turns on.

To activate the relay using EnerVista software:

1. Navigate to **Settings > Product Setup > Installation** and change the **Relay Settings** field to "Programmed."
2. Save the change.

3.6 Install software

3.6.1 EnerVista communication overview

The EnerVista UR Setup software communicates to the relay via the front panel RS232 or USB port or the rear RS485 / Ethernet ports.

To communicate via the RS232 port, use a standard straight-through serial cable. Connect the DB-9 male end to the relay and the DB-9 or DB-25 female end to the computer COM2 port as described in the CPU Communication Ports section earlier in this chapter.

Figure 3-54: Relay communication options

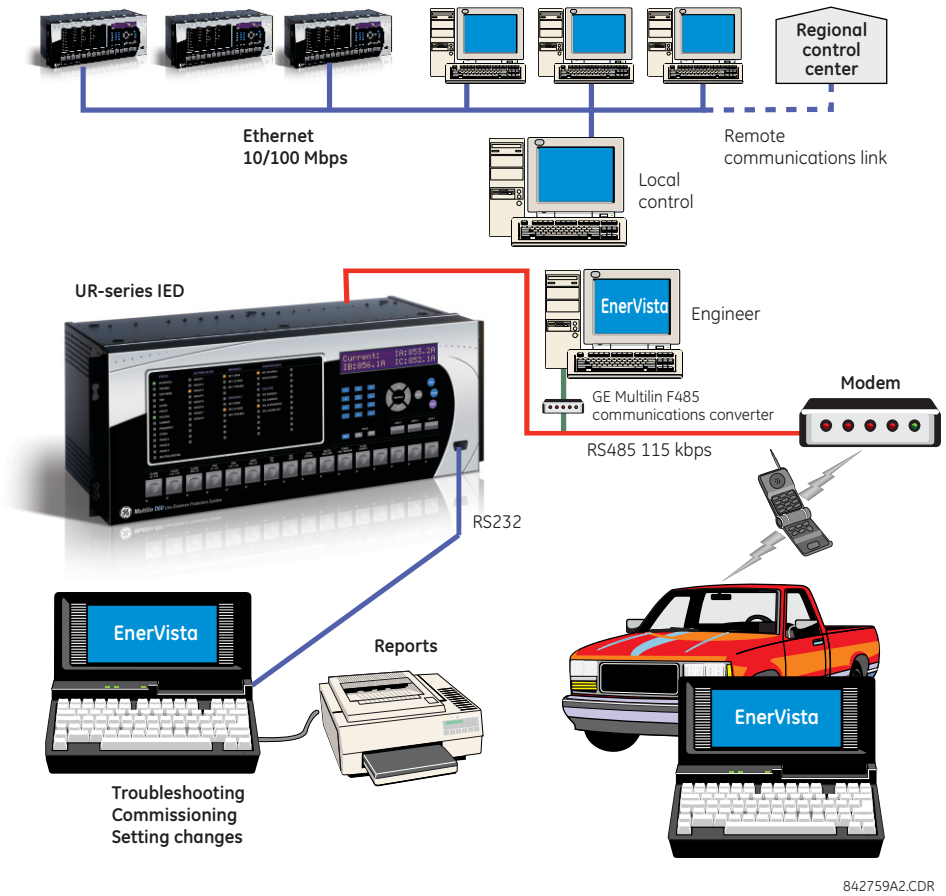

To communicate through the C70 rear RS485 port from a computer RS232 port, the GE Grid Solutions RS232/RS485 converter box is required. This device (catalog number F485) connects to the computer using a straight-through serial cable. A shielded twisted-pair wire (20, 22, or 24 AWG) connects the F485 converter to the C70 rear communications port. The converter terminals (+, –, GND) are connected to the C70 communication module (+, –, COM) terminals. See the CPU Communication Ports section in chapter 3 for details. The line is terminated with an R-C network (that is, 120 Ω, 1 nF) as described in this chapter.

3.6.2 System requirements

The relay front panel or the EnerVista UR Setup software can be used to communicate with the relay. The software interface is the preferred method to edit settings and view actual values because the computer monitor can display more information.

The system requirements for the EnerVista software are as follows:

- Intel Pentium processor (dual core) or (recommended) Core Duo
- Microsoft Windows 7 with Service Pack 1 (32-bit or 64-bit), Windows 10, Windows Server 2008 Release 2 with Service Pack 1 (64-bit), or Windows Server 2012 Release 2 (64-bit), in the required EnerVista language, such as French or Japanese
- 1 GB free hard drive space
- 2 GB RAM
- 1280 x 800 display screen

3.6.3 Install software

After ensuring that the requirements for using EnerVista UR Setup software are met, there are three ways to install the software:

- From the DVD
- Download EnerVista Launchpad software from http://www.gegridsolutions.com/multilin and install it
- Download the EnerVista UR Setup software from http://www.gegridsolutions.com/multilin and install it

Install on a computer that has an operating system in the required language, for example a German operating system for use with EnerVista software in German.

Unless specifically granted, the software can be installed on one computer and used by one user.

NOTE

The front panel can be switched in the EnerVista software between enhanced and basic panels under **Maintenance > Change Front Panel**.

To install the software from the DVD and using EnerVista Launchpad:

1. Insert the DVD into the DVD drive of your computer.
2. Click the **Install Now** button and follow the instructions.
3. When installation is complete, start the EnerVista Launchpad application.
4. Click the **IED Setup** section of the **Launch Pad** window.

Figure 3-55: Adding a UR device in Launchpad window

5. In the EnerVista Launch Pad window, click the **Add Product** button and select the appropriate product as follows. Select the **Web** option to ensure the most recent software release, or select **CD** if you do not have an Internet connection, then click the **Add Now** button to list software items for the product. EnerVista Launchpad obtains the software from the Internet or DVD and automatically starts the installation program after prompting about updates.

   From the web, the software is downloaded. A wizard opens.

Figure 3-56: Identifying the UR device type

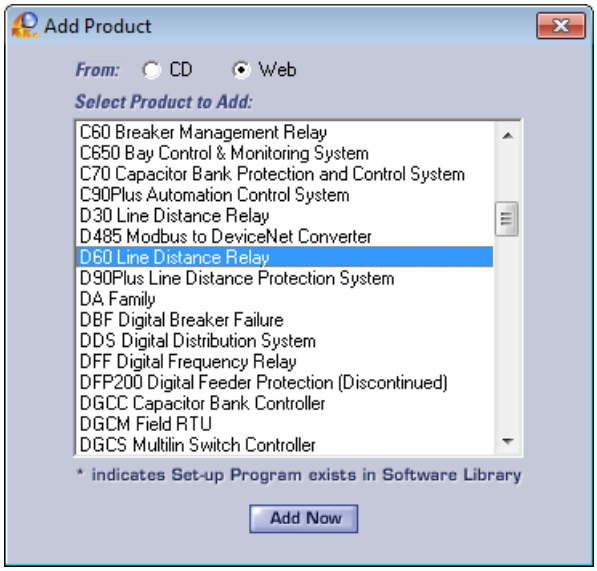

6. In the wizard, click the **Next** button and complete the process. The files are installed in the directory indicated, and the installation program automatically creates icons and adds an entry to the Windows start menu.

   The UR device is added to the EnerVista Launchpad window, as shown.

Figure 3-57: UR device added to Launchpad window

7. For other than English, configure the language for the front panel in the EnerVista software under **Settings > Product Setup > Display Properties**. User-entered strings are not translated, for example relay names, so setting the language now ensures that the names are entered/displayed in the required language. For the EnerVista software language, access the **View > Language** menu item.

3.7 Add device to software

You connect remotely to the C70 through the rear RS485 or Ethernet port with a computer running the EnerVista UR Setup software. The C70 also can be accessed locally with a computer through the front panel RS232 or USB port or the rear Ethernet port using the Quick Connect feature.

The following procedures are outlined:

- Add device for serial access; see the Configure Serial Connection section
- Add device for the rear Ethernet port; see the Configure Ethernet Connection section

- Add device for access using a modem; see the Configure Modem Connection section
- Connect locally with a computer through either the front RS232 or USB port or rear Ethernet port; see the Connect to the C70 section
- Discover automatically UR devices within a network; see the Automatic Discovery of UR Devices section

Devices in the Device Setup window are listed in the order entered.

Devices in the main software window are listed alphabetically. Use the **Device Name** to order them as required, for example B30 Odessa, B30 Truro, B90, T35.

You cannot import a file to add a device to the software. You can import settings as outlined at the end of the chapter.

The Quick Connect button also can be used to add devices. The device is added to a Quick Connect menu item in the Online Window area, cannot be moved from it to another grouping, and needs to be renamed in the Device Setup window. GE instead recommends using the Device Setup window to add devices, as outlined here.

3.7.1 Set IP address in UR

Implement IP addresses for the computer and a C70 device as follows.

The UR family supports the use of subnetworks as documented in RFC 950, which divides class-based networks into subnetworks (non-CIDR). The classes and IP address ranges are defined as follows.

Table 3-7: IP address classes

Classes	IP address range	Default subnet mask address	UR devices
A	1.0.0.0 to 127.255.255.255	255.0.0.0	65,535 or more
B	128.0.0.0 to 191.255.255.255	255.255.0.0	255 to 65,534
C	192.0.0.0 to 223.255.255.255	255.255.255.0	0 to 254
D	224.0.0.0 to 239.255.255.255	(Reserved for multicasting)	
E	240.0.0.0 to 255.255.255.255	(Reserved)	

Both network and subnet addresses are contained within a range. The number of hosts determines the class and addresses as follows:

- Class A 255.0.0.0 — The first octet (255) specifies the network, the second to fourth octets (0) specify the subnet and host. Use this class when you have more than 65,535 hosts (UR devices).
- Class B 255.255.0.0 — The first two octets (255) specify the network, the third octet (0) specifies the subnet, and the fourth octet (0) specifies the host. Use this class when you have 255 to 65,534 hosts (UR devices).
- Class C 255.255.255.0 — The first three octets (255) specify the network and the last octet (0) specifies the subnet and host. Use this class when you have up to 254 hosts (UR devices).

An example of implementation is one computer and one UR device. Because there is one UR device, class C addressing is required. So we use UR 192.167.2.x with subnet mask 255.255.255.0 and computer 192.167.3.x with subnet mask 255.255.255.0.

For older, non-CIDR routing protocols, such as RIP version 1, follow these restrictions:

- Identical subnet masks — Use a single mask for all subnets within a network
- Contiguous subnets — The subnets must be contiguous and not split among networks. The subnets cannot pass traffic through other networks.

The IP and subnet addresses need to be added to the UR for Ethernet communication.

For serial communication, for example using any front RS232 port and the Quick Connect feature, the addresses are not required, but typically they are entered to add/configure devices for regular use.

To add the IP addresses:

1. On the front of the UR, press the **MENU** key until the **SETTINGS** menu displays.
2. Navigate to **SETTINGS** ⇨ **PRODUCT SETUP** ⇩⇨ **COMMUNICATIONS** ⇩⇨ **NETWORK** ⇨ **NETWORK PORT** ⇩⇨ **PRT IP ADDRESS**.

3. Enter an IP address, for example 10.11.33.01, and press the **ENTER** key to save the value. For example, press the period key to clear any existing address, then press the number keys to add anew address.
4. In the same menu, select the **PRT SUBNET IP MASK** setting. Enter a subnet IP address, for example 255.000.000.000 for 255.0.0.0.
5. Press the **ENTER** key to save a value.

The gateway address also needs to be configured when connecting through an Ethernet network. Access **SETTINGS** ⇨ **PRODUCT SETUP** ⇩⇨ **COMMUNICATIONS** ⇩⇨ **IPv4 ROUTE TABLE** ⇨ **DEFAULT IPv4 ROUTE** ⇨ **GATEWAY ADDRESS**.

If using a blue or grey Ethernet cable, skip the rest of the this section. If using an orange cross-over Ethernet cable, the computer needs to be set up as follows.

1. Use an orange Ethernet cross-over cable to connect the computer to the rear Ethernet port. In case you need it, the following figure shows the pinout for an Ethernet cross-over cable.

Figure 3-58: Ethernet cross-over cable PIN layout

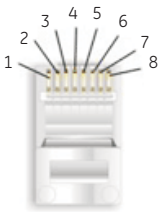

END 1		
Pin	Wire color	Diagram
1	White/orange	
2	Orange	
3	White/green	
4	Blue	
5	White/blue	
6	Green	
7	White/brown	
8	Brown	

END 2		
Pin	Wire color	Diagram
1	White/green	
2	Green	
3	White/orange	
4	Blue	
5	White/blue	
6	Orange	
7	White/brown	
8	Brown	

842799A1.CDR

Next, assign the computer an IP address compatible with the relay's IP address.

1. From the Windows desktop, right-click the **My Network Places** icon and select **Properties** to open the network connections window. Or in Windows 7, access the **Network and Sharing Center** in the Control Panel.

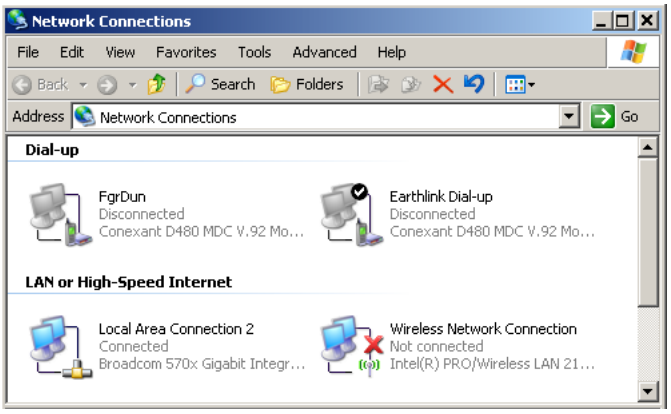

2. Right-click the **Local Area Connection** icon and select **Properties**.

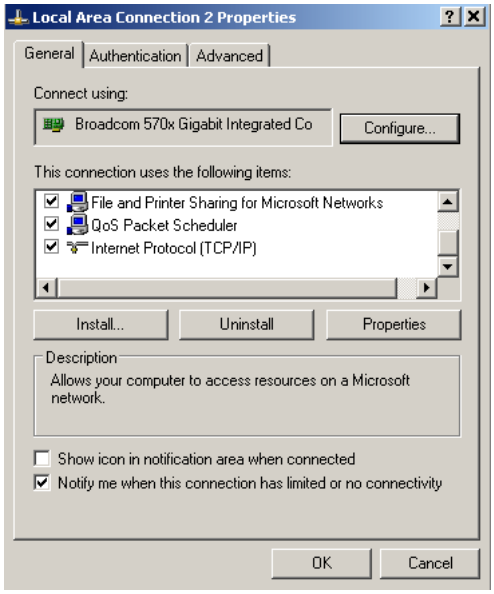

3. Select the **Internet Protocol (TCP/IP)** item from the list, and click the **Properties** button.

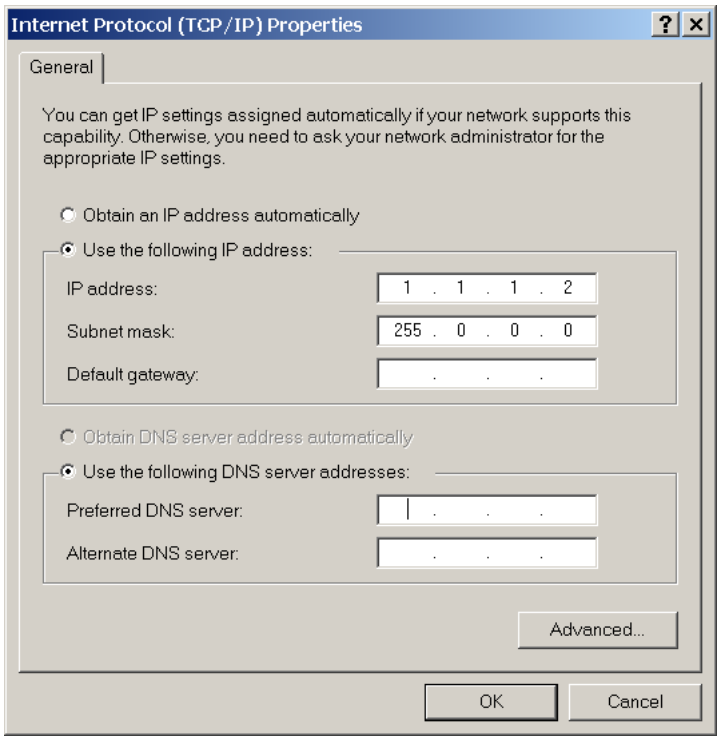

4. Click the "Use the following IP address" box.
5. Enter an **IP address** with the first three numbers the same as the IP address of the C70 relay and the last number different (in this example, 1.1.1.2).
6. Enter a subnet mask equal to the one set in the C70 (in this example, 255.0.0.0).
7. Click the **OK** button to save the values.

Before continuing, test the Ethernet connection.

1. Open a Windows console window, for example by selecting **Start > Run** from the Windows **Start** menu and typing "cmd" or clicking the **Start** button and entering "cmd".
2. Type the following command, substituting the IP address of 1.1.1.1 with yours:

```
C:\WINNT>ping 1.1.1.1
```

3. If the connection is successful, the system returns four replies similar to the following:

```
Pinging 1.1.1.1 with 32 bytes of data:
Reply from 1.1.1.1: bytes=32 time<10ms TTL=255
Reply from 1.1.1.1: bytes=32 time<10ms TTL=255
Reply from 1.1.1.1: bytes=32 time<10ms TTL=255
Reply from 1.1.1.1: bytes=32 time<10ms TTL=255
Ping statistics for 1.1.1.1:
    Packets: Sent = 4, Received = 4, Lost = 0 (0% loss),
Approximate round trip time in milliseconds:
    Minimum = 0ms, Maximum = 0ms, Average = 0 ms
```

4. Note that the values for `time` and `TTL` vary depending on local network configuration.
5. If the following sequence of messages appears when entering the `C:\WINNT>ping 1.1.1.1` command:

```
Pinging 1.1.1.1 with 32 bytes of data:
Request timed out.
Request timed out.
Request timed out.
Request timed out.
Ping statistics for 1.1.1.1:
    Packets: Sent = 4, Received = 0, Lost = 4 (100% loss),
Approximate round trip time in milliseconds:
    Minimum = 0ms, Maximum = 0ms, Average = 0 ms
Pinging 1.1.1.1 with 32 bytes of data:
```

verify the physical connection between the C70 and the computer, and double-check the programmed IP address in the **PRODUCT SETUP** ⇨⇩ **COMMUNICATIONS** ⇨⇩ **NETWORK** ⇨ **IP ADDRESS** setting, then repeat step 2.

6. If the following sequence of messages appears when entering the `C:\WINNT>ping 1.1.1.1` command:

```
Pinging 1.1.1.1 with 32 bytes of data:
Hardware error.
Hardware error.
Hardware error.
Hardware error.
Ping statistics for 1.1.1.1:
    Packets: Sent = 4, Received = 0, Lost = 4 (100% loss),
Approximate round trip time in milliseconds:
    Minimum = 0ms, Maximum = 0ms, Average = 0 ms
Pinging 1.1.1.1 with 32 bytes of data:
```

verify the physical connection between the C70 and the computer, and double-check the programmed IP address in the **PRODUCT SETUP** ⇨⇩ **COMMUNICATIONS** ⇨⇩ **NETWORK** ⇨ **IP ADDRESS** setting, then repeat step 2.

7. If the following sequence of messages appears when entering the `C:\WINNT>ping 1.1.1.1` command:

```
Pinging 1.1.1.1 with 32 bytes of data:
Destination host unreachable.
Destination host unreachable.
Destination host unreachable.
Destination host unreachable.
Ping statistics for 1.1.1.1:
    Packets: Sent = 4, Received = 0, Lost = 4 (100% loss),
Approximate round trip time in milliseconds:
    Minimum = 0ms, Maximum = 0ms, Average = 0 ms
Pinging 1.1.1.1 with 32 bytes of data:
```

verify the IP address is programmed in the local computer by entering the ipconfig command in the command window.

```
C:\WINNT>ipconfig
Windows IP Configuration
```

```
Ethernet adapter <F4FE223E-5EB6-4BFB-9E34-1BD7BE7F59FF>:
        Connection-specific DNS suffix. . :
        IP Address. . . . . . . . . . . . : 0.0.0.0
        Subnet Mask . . . . . . . . . . . : 0.0.0.0
        Default Gateway . . . . . . . . . :
Ethernet adapter Local Area Connection:
        Connection-specific DNS suffix  . :
        IP Address. . . . . . . . . . . . : 1.1.1.2
        Subnet Mask . . . . . . . . . . . : 255.0.0.0
        Default Gateway . . . . . . . . . :
C:\WINNT>
```


Before using the Quick Connect feature through the Ethernet port, disable any configured proxy settings in Internet Explorer.

1. Start the Internet Explorer software.
2. Select the **Tools > Internet Options** menu item and click the **Connections** tab.
3. Click on the **LAN Settings** button to open the following window.

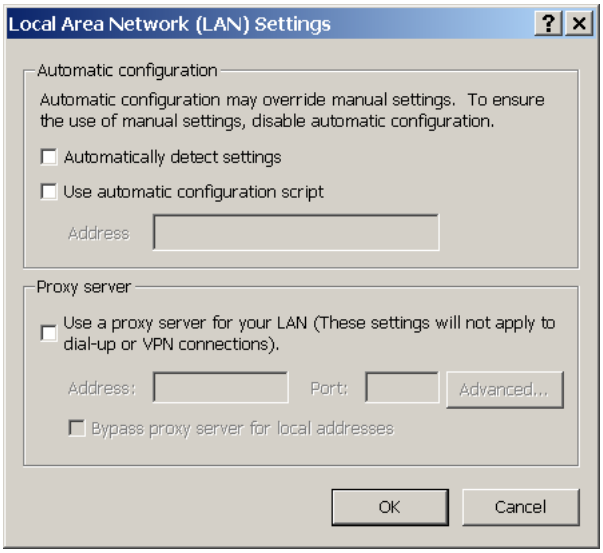

4. Ensure that the “Use a proxy server for your LAN” box is not checked.

If this computer is used to connect to the Internet, re-enable any proxy server settings after the computer has been disconnected from the C70 relay.

1. Start the Internet Explorer software.
2. Select the UR device from the EnerVista Launchpad to start EnerVista UR Setup.

3. Click the **Quick Connect** button to open the window.

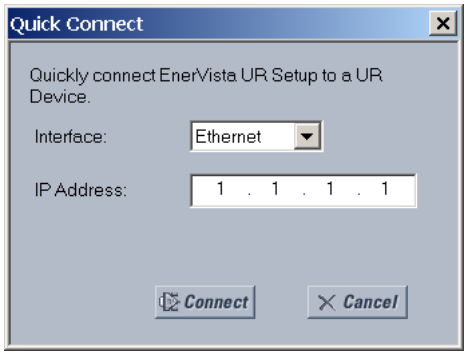

4. Select the **Ethernet** interface and enter the IP address assigned to the C70, then click the **Connect** button. The EnerVista UR Setup software creates a site named "Quick Connect" with a corresponding device also named "Quick Connect" and displays them on the left side of the screen.
5. Expand the sections to view data directly from the C70 device.

Each time that the EnerVista UR Setup software is initialized, click the **Quick Connect** button to establish direct communications to the C70. This ensures that configuration of the EnerVista UR Setup software matches the C70 model number.

When direct communications with the C70 via Ethernet is complete, make the following changes:

1. From the Windows desktop, right-click the **My Network Places** icon and select **Properties** to open the network connections window.
2. Right-click the **Local Area Connection** icon and select the **Properties** item.
3. Select the **Internet Protocol (TCP/IP)** item from the list provided and click the **Properties** button.
4. Set the computer to "Obtain a relay address automatically" as shown.

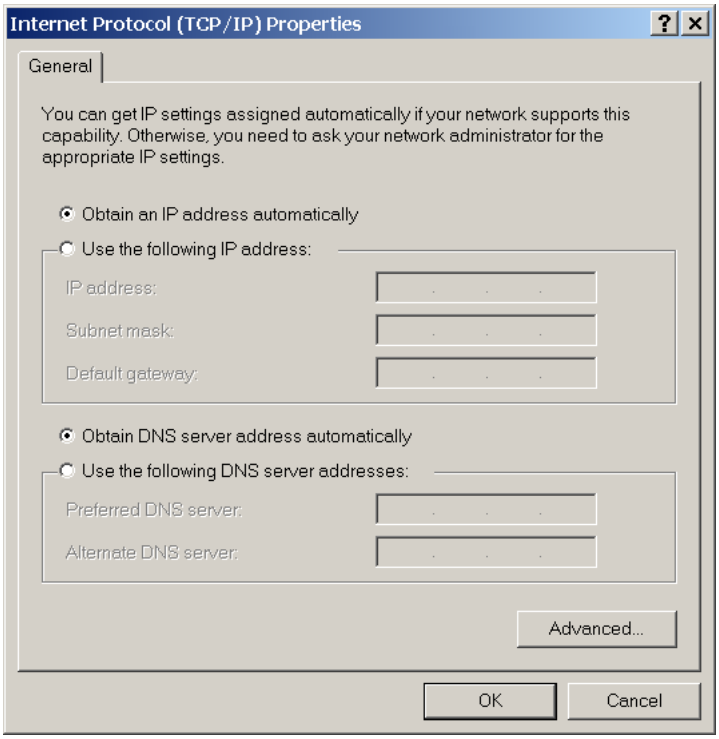

If the computer is used to connect to the Internet, re-enable any proxy server settings after the computer has been disconnected from the C70 relay.

3.7.2 Configure serial connection

Two options are possible: local connection between computer and front RS232 port, and remote connection using the rear RS485 terminals.

If using Windows 10 and a GE USB-to-Serial Cable Converter (part number 0100-0001) connected between a USB port on the computer and the front serial port on the UR, use the Prolific driver version 3.2.0.0 from the Internet.

To use the RS485 terminals at the back of the relay, a GE Grid Solutions F485 converter (or compatible RS232-to-RS485 converter) is required. See the F485 instruction manual for details.

1. Connect the computer to the F485 and the F485 to the RS485 terminal on the back of the UR device. Or connect the computer to the RS232 port on the front of the relay.
2. Start the EnerVista UR Setup software, or in EnerVista Launchpad select the UR device to start the software.
3. Click the **Device Setup** button. The window opens.
4. Click the **Add Site** button. A new category is added. Enter a site name in the **Site Name** field. Optionally add a short **Description** of the site. This example uses "Location 1" as the site name.
5. Click the **Add Device** button. A new device is added.
6. Enter a name in the **Device Name** field, up to 15 characters, and optionally add a **Description** of the site. The **Color** is for the text in the device list in the Online Window.
7. Select "Serial" from the **Interface** drop-down list. Interface parameters display that must be entered for serial communications. Try to load automatically the fields by clicking the **Read Order Code** button.

Figure 3-59: Configuring serial communication

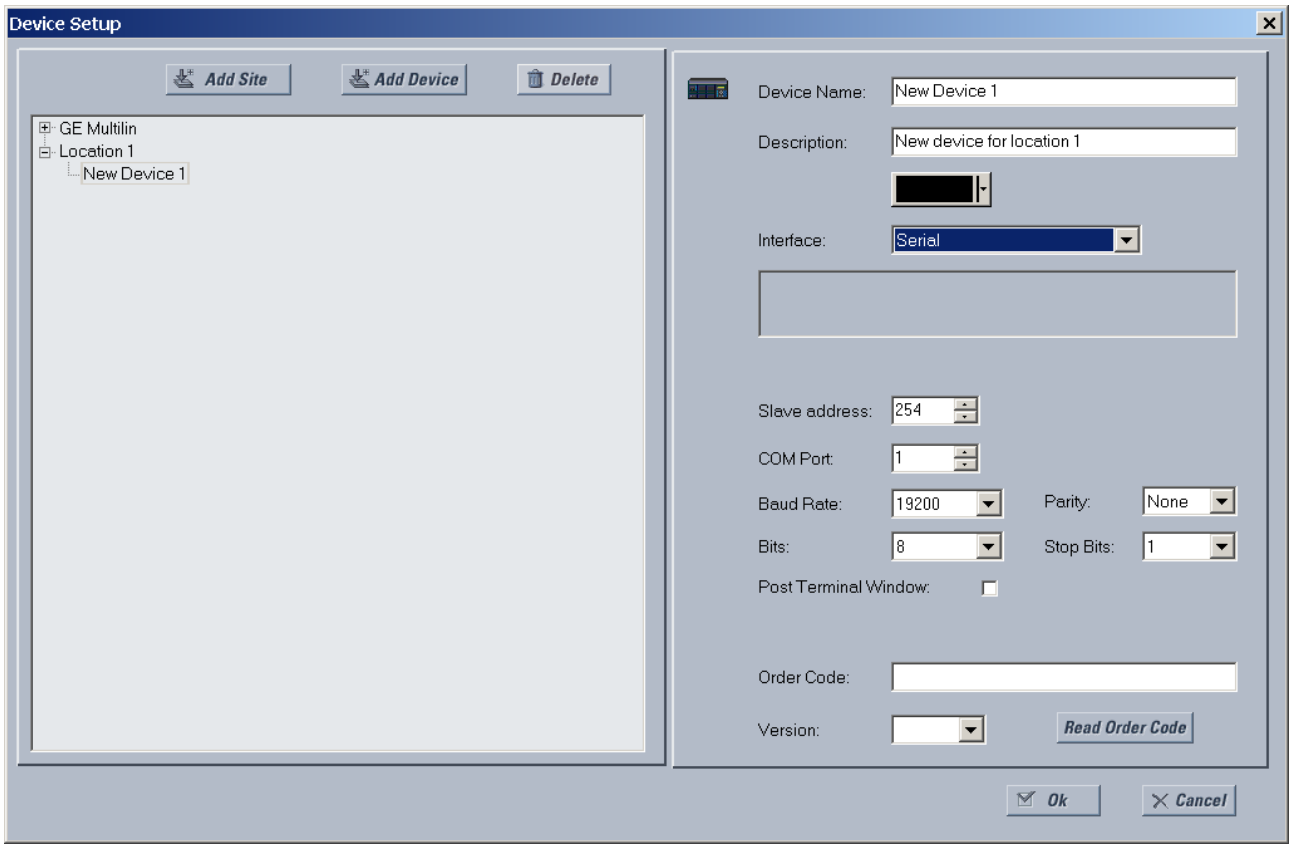

8. Enter the COM port used by the computer, the baud rate, and parity settings from the front panel **SETTINGS ⇨ PRODUCT SETUP ⇨⇩ COMMUNICATIONS ⇨ SERIAL PORTS** menu, and the relay slave address setting from the front panel **SETTINGS ⇨ PRODUCT SETUP ⇨⇩ COMMUNICATIONS ⇨⇩ MODBUS PROTOCOL ⇨ MODBUS SLAVE ADDRESS** menu in their respective fields.

   Baud Rate — Typically 19200 bits per second (bps) for RS232, and higher for RS485. Both modems need to use the same rate, meaning at the computer and the C70 ends.

   Parity — Set to None if unsure

   Bits — Set to 8 if unsure

   Stop Bits — Set to 1 if unsure

   Post Terminal Window — Enable this option if you have a Schweitzer Engineering (SEL) SEL-203x Communications Processor, such as an SEL-2030 or SEL-2032. This option enables display of a terminal window to allow interaction with the other device.
9. Click the **Read Order Code** button to connect to the C70 and upload the order code to the EnerVista software. If a communications error occurs, ensure that the EnerVista software serial communications values entered in the previous step correspond to the relay setting values, and also ensure that the same IP address is not assigned to multiple C70 ports.
10. Click the **OK** button when the relay order code has been received. The new site and device are added to the Online Window.

The device has been configured for serial communications. Proceed to the Connect to the C70 section to begin communication.

3.7.3 Configure Ethernet connection

You connect the Ethernet cable, define a site in the software, then add the relay as a device for the site.

The Ethernet cable can be connected from the relay to an Ethernet network or directly to the computer. The computer and UR device must be on the same subnet.

1. Connect the Ethernet network cable and any SFP supplied with the C70 to the Ethernet port on the back of the device.
2. Start the EnerVista UR Setup software, or in EnerVista Launchpad select the UR device to start the software.
3. Click the **Device Setup** button. The window opens.
4. Click the **Add Site** button. A new category is added. Enter a site name in the **Site Name** field. Optionally add a short **Description** of the site. This example uses “Location 1” as the site name.
5. Click the **Add Device** button. A new device is added.
6. Enter a name in the **Device Name** field, up to 15 characters, and optionally add a **Description** of the site. The **Color** is for the text in the device list in the Online Window.
7. Select “Ethernet” from the **Interface** drop-down list. This displays a number of interface parameters that must be entered for Ethernet functionality.

3

Figure 3-60: Configuring Ethernet communication

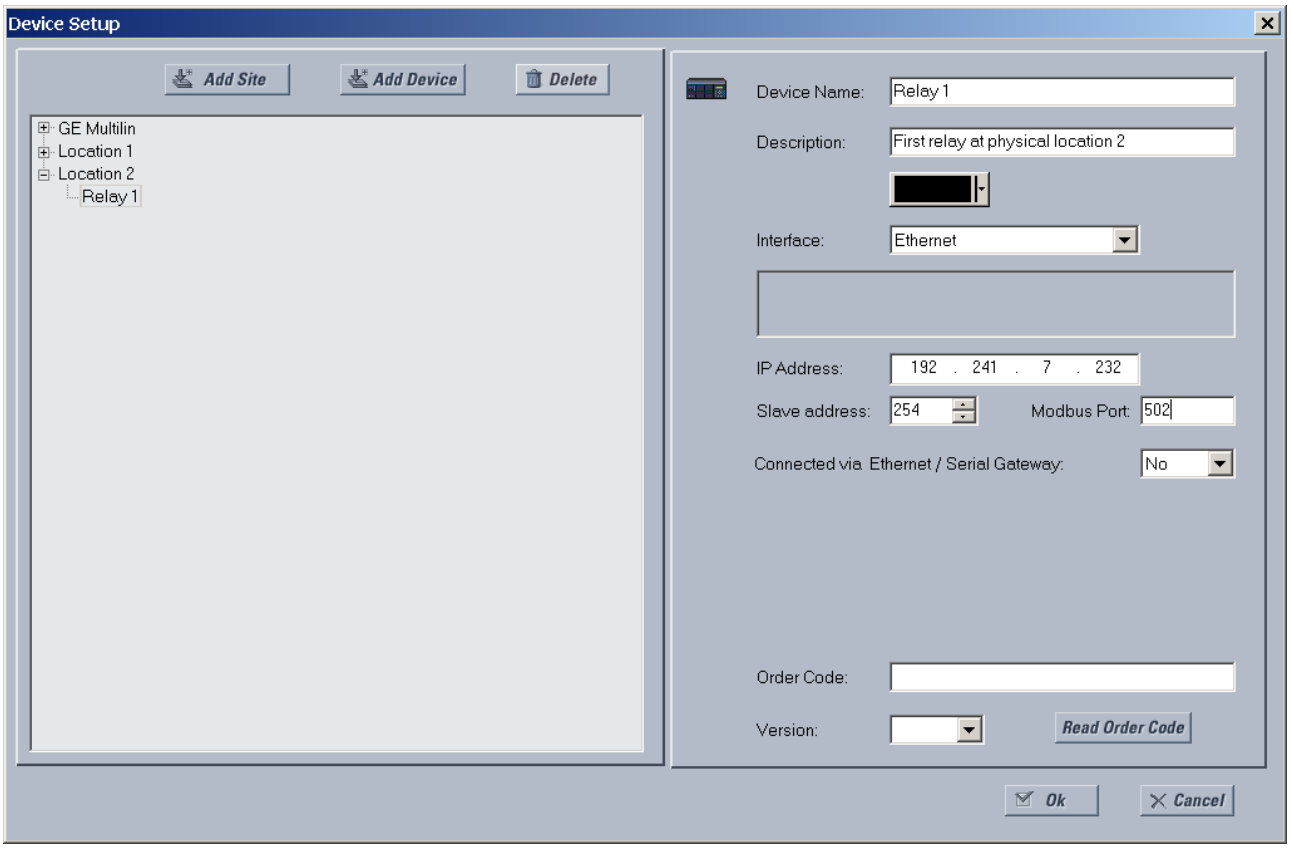

8. Enter the relay **IP Address**, which can be viewed on the device front panel under **SETTINGS** ⇨ **PRODUCT SETUP** ⇩⇨ **COMMUNICATIONS** ⇩⇨ **NETWORK** ⇩⇨ **NETWORK PORT** ⇨ **PRT IP ADDRESS**. Once the IP address is entered, try to load automatically the fields by clicking the **Read Order Code** button.
9. Enter the relay **Slave address** and **Modbus Port** address values from the settings in the front panel **SETTINGS** ⇨ **PRODUCT SETUP** ⇩⇨ **COMMUNICATIONS** ⇩⇨**MODBUS PROTOCOL** menu.
10. If using a gateway to connect to the device, select **Yes** from the drop-down list.
11. Click the **Read Order Code** button to connect to the C70 device and upload the order code. If the device was entered already, a message displays "Device 'x' is also using IP address...." If a communications error occurs, ensure that the values entered in the previous steps correspond to the relay setting values, and also ensure that the same IP address is not assigned to multiple C70 ports.
12. Click the **OK** button when the relay order code has been received. The new site and device are added to the Online Window.

The device has been configured for Ethernet communications. Proceed to the Connect to the C70 section to begin communications.

3.7.4 Configure modem connection

A modem connection allows a computer to communicate with a UR device over phone lines.

Two modems are required. One modem is connected to the UR device, either by connecting the serial cable to the front panel port or through a RS485 box to the rear terminals of the UR device. The second modem is connected to the computer that initiates the connection.

To add a UR device for modem connections:

1. Connect the modems to the computer and UR.

2. Start the EnerVista UR Setup software, or in EnerVista Launchpad select the UR device to start the software.
3. Click the **Device Setup** button. The window opens.
4. Click the **Add Site** button. A new category is added. Enter a site name in the **Site Name** field, such as London East. Optionally add a short **Description** of the site, such as the address or intersection.
5. Click the **Add Device** button. A new device is added.
6. Enter a name in the **Device Name** field, up to 15 characters, and optionally add a **Description** of the site. The **Color** is for the text in the device list in the Online Window.
7. Select "Modem" from the **Interface** drop-down list. This displays a number of interface parameters that must be entered.
8. Select "Generic Modem" from the **Modem Name** drop-down list, then enter the **Phone Number** to dial to establish communication with the remote modem.

   Post Terminal Window — Enable this option if you have a Schweitzer Engineering (SEL) SEL-203x Communications Processor, such as an SEL-2030 or SEL-2032. It enables display of a terminal window to allow interaction with the other device.
9. Once the phone number is entered, try to load automatically the device information by clicking the **Read Order Code** button.
10. Click the **OK** button when the relay order code has been received. The new device is added to the Online window.

The UR device has been added to the software.

3.7.5 Automatic discovery of UR devices

The EnerVista UR Setup software can find and communicate to all UR-family devices located on an Ethernet network.

Using the **Discover** button in the **Device Setup** window, a single click of the mouse triggers the software to detect any URs located on the network. This is done by searching a range of IP addresses based on the subnet mask of the computer. When a UR device is detected, the EnerVista UR Setup software proceeds to configure all settings and order code options in the window. This feature allows the user to identify and interrogate all UR devices at a location.

Examples of address ranges are as follows:

- If the host has an IP address of 3.94.247.10 and its subnet mask is 255.255.252.0, then the host's subnet is 3.94.244.0, and the possible IP addresses in this subnet are

  3.94.244.1 to 254

  3.94.245.1 to 254

  3.94.246.1 to 254

  3.94.247.1 to 254

  The discover function scans all those possible IP addresses to detect UR relays.
- If the host has an IP address of 3.94.247.145 and its subnet mask is 255.255.255.128, then the host's subnet is 3.94.247.128, and the discover function scans IP addresses of 3.94.247.128 to 3.94.248.254 for UR relays

To automatically add UR devices:

1. In the EnerVista software, click the **Device Setup** button. The window opens.
2. Click the **Discover** button. The software searches for UR devices on the computer subnet and adds any found to the Online Window area. If a required device is not found, add it manually as outlined earlier.

Figure 3-61: Discover button to detect UR devices in network

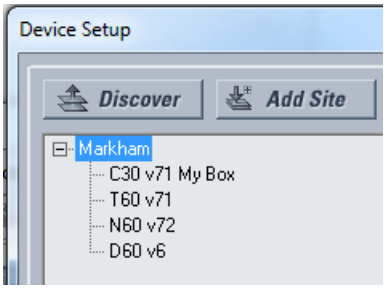

3

3.8 Connect to the C70

There are four ways to the connect to the device, as follows:

- RS232 or USB port (outlined here)
- RS485 port
- Ethernet port (outlined here)
- LAN

When unable to connect because of an "ACCESS VIOLATION," access **Device Setup** and refresh the order code for the device.

When unable to connect, ensure that the same IP address is not assigned to multiple C70 ports, for example under **Settings > Product Setup > Communications > Network**.

If still unable to connect, try unplugging and replugging the Ethernet connection. If that does not work, try to ping the device from the computer, and if unsuccessful, restart the computer.

NOTE

When multiple computers are connected to a C70 device, EnerVista settings windows are not updated automatically. They are refreshed when re-opened. If a user changes a setting on one computer, the other users need to refresh the display by closing and opening the settings window to see the change. To ensure that current settings are always viewed, close settings windows when not in use so that they are up-to-date when next accessed.

3.8.1 Connect to the C70 in EnerVista

For information on using the EnerVista software, see the Interfaces chapter.

To access the relay in EnerVista:

1. Open the **Settings > Product Setup > Display Properties** window as shown. The window opens with a status indicator on the lower left of the EnerVista UR Setup window.

Figure 3-62: EnerVista window

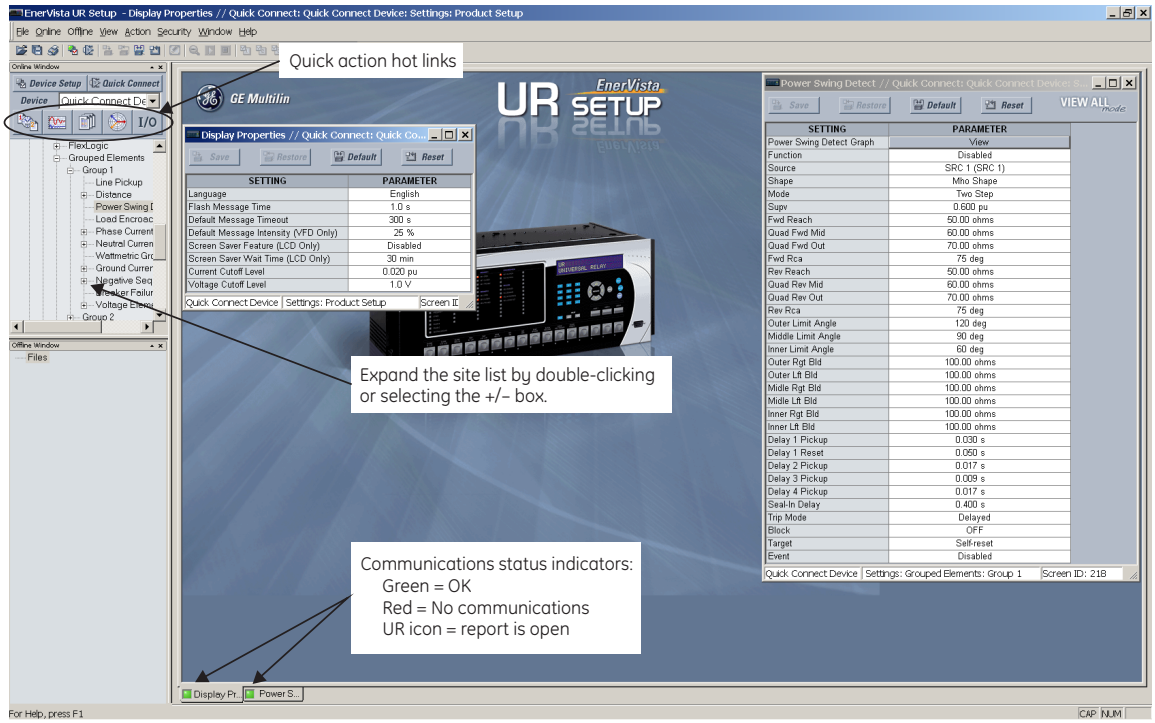

842743A3.CDR

2. If the status indicator is red, verify that the Ethernet network cable is properly connected to the Ethernet port on the back of the relay and that the relay has been properly set up for communication.
3. If a relay icon appears in place of the status indicator, then a report (such as an oscillography or event record) is open. Close the report to re-display the green status indicator.
4. The Display Properties settings can now be viewed, edited, or printed.

3.8.1.1 Quick action hot links

The EnerVista UR Setup software has several quick action buttons to provide instant access to several functions that are performed often when using URs. From the online window, users can select the relay to interrogate from a pull-down window, then click the button for the action to perform. The following quick action functions are available:

- View the event record
- View the last recorded oscillography record
- View the C70 protection summary
- View all of the C70 metering values
- View the status of all C70 inputs and outputs
- Generate a service report

3.8.2 Use Quick Connect via front RS232 port

This feature applies to the enhanced and basic front panels.

To connect to the UR from a computer using a serial cable:

1. Connect an RS232 serial cable to the computer and the front panel RS232 port. For example, use a USB-to-serial RS232 DB9M converter cable when connecting to the USB port on the computer. If using Windows 10 and a GE USB-to-Serial Cable Converter (part number 0100-0001) connected between a USB port on the computer and the front serial port on the UR, use the Prolific driver version 3.2.0.0 from the Internet.

2. Start the EnerVista UR Setup software, or in EnerVista Launchpad select the UR device to start the software.
3. Click the **Quick Connect** button. The window opens.

Figure 3-63: Quick Connect window to access a device

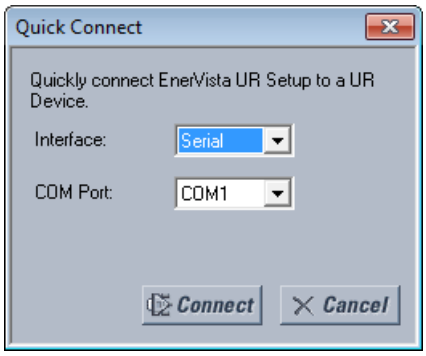

4. Select the serial **Interface** and the communications port (**COM Port**) from the drop-down lists, then click **Connect**. The COM Port is that of the computer.
5. The EnerVista software creates a site named “Quick Connect” with a corresponding device also named “Quick Connect” and displays them in the Online Window. Expand the sections to view data directly from the UR device. Use the **Device Setup** button to change the site name.

Each time that the EnerVista UR Setup software is initialized, click the **Quick Connect** button to establish direct communications to the C70. This ensures that configuration of the EnerVista UR Setup software matches the C70 model number.

3.8.3 Use Quick Connect via front USB port

This feature applies to the graphical front panel.

To connect to the UR from a computer using a USB cable:

1. Connect the cable to the computer and the front panel USB port (square connector).
2. Start the EnerVista UR Setup software, or in EnerVista Launchpad select the UR device to start the software.
3. Click the **Quick Connect** button to open the window.
4. Select the USB **Interface** and the "GE Virtual Serial Port" driver from the drop-down list, then click **Connect**. If the GE driver does not display, it means that the USB cable was connected on Windows 10 when upgrading the UR software. You need to re-install the EnerVista software with the USB cable disconnected.
5. The EnerVista software creates a site named “Quick Connect” with a corresponding device also named “Quick Connect” and displays them in the Online Window. Expand the sections to view data directly from the UR device. Use the **Device Setup** button to change the site name.

Each time that the EnerVista UR Setup software is initialized, click the **Quick Connect** button to establish direct communications to the C70. This ensures that configuration of the EnerVista UR Setup software matches the C70 model number.

3.8.4 Use Quick Connect via a rear Ethernet port

To connect to a UR using an Ethernet cable:

1. In the EnerVista software, click the **Quick Connect** button. The window opens.

Figure 3-64: Quick Connect window for Ethernet connection

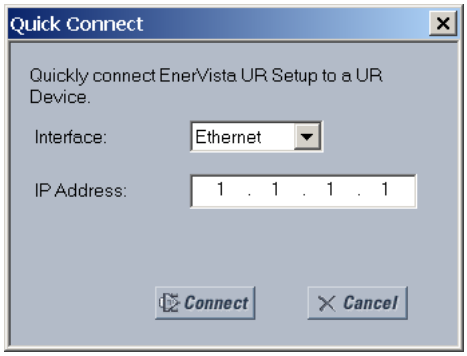

2. Select the **Ethernet** interface and enter the IP address assigned to the C70, then click the **Connect** button. The EnerVista UR Setup software creates a site named "Quick Connect" with a corresponding device also named "Quick Connect" and displays them in the Online Window.
3. Expand the sections to view data directly from the C70 device. Use the **Device Setup** button to change the site name.

Each time that the EnerVista software is initialized, click the **Quick Connect** button to establish direct communications to the C70. This ensures that configuration of the EnerVista UR Setup software matches the C70 model number.

3.9 Set up CyberSentry and change default password

If and when first using CyberSentry security, use the following procedure for set up.

1. Log in to the relay as Administrator by using the **VALUE** keys on the front panel or through EnerVista connected serially (so that no IP address is required). If logging in through EnerVista choose Device authentication (see figure). Enter the default password "ChangeMe1#". Note that the "Lock relay" setting needs to be disabled in the **Security > Supervisory** menu. When this setting is disabled, configuration and firmware upgrade are possible. By default, this setting is disabled.
2. Enable the Supervisor role if you have a need for it.
3. Make any required changes in configuration, such as setting a valid IP address for communication over Ethernet.
4. Log out of the Administrator account by choosing None.

Next, device or server authentication can be chosen on the login screen, but the choice is available only in EnerVista. Use Device authentication to log in using the five pre-configured roles (Administrator, Supervisor, Engineer, Operator, Observer, or Administrator and Supervisor when Device authentication is disabled). When using a serial connection, only Device authentication is supported. When Server authentication is required, characteristics for communication with a RADIUS server must be configured on the UR. This is possible only through the EnerVista software. The RADIUS server itself also must be configured. At the end of this instruction manual, the appendix called RADIUS Server Configuration gives an example of how to set up a simple RADIUS server. Once both the RADIUS server and the parameters for connecting the UR to the server have been configured, you can choose Server authentication on the login screen of EnerVista.

Figure 3-65: Login screen for CyberSentry

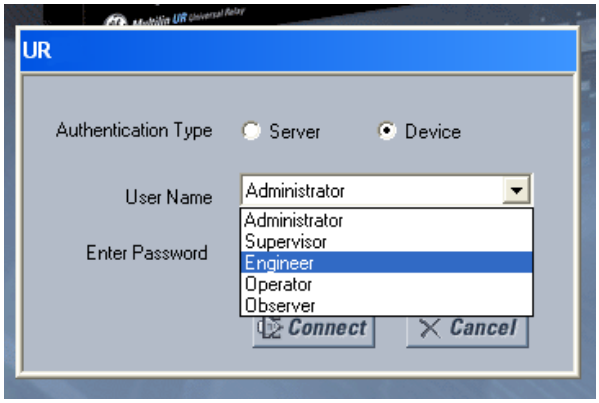

During the commissioning phase, you have the option to bypass the use of passwords. Do so by enabling the **Bypass Access** setting under **Settings > Product Setup > Security > Supervisory**. Be sure to disable this bypass setting after commissioning the device.

You can change the password for any role either from the front panel or through EnerVista. If using EnerVista, navigate to **Settings > Product Setup > Security**. Change the **Local Administrator Password**, for example. It is strongly recommended that the password for the Administrator be changed from the default. Changing the passwords for the other three roles is optional.

3.10 Import settings

The following file types can be imported:

- URS — UR settings file (firmware version7.3x or earlier)
- IID — Instantiated IED capability description file — Actual settings on UR
- CID — Configured IED description file — Settings sent to the UR (may or may not be actual settings). When using IEC 61850, network settings can also be configured by accepting a CID file that includes them, as long as the IP address of at least one port is manually configured in the relay before the CID file is sent and the IP address matches that in the file.

The import is done in the Offline Window area.

To import a settings file:

1. In the Offline Window area, right-click the device and select the **Add Device from File** option. The device is that from which you want to import settings.
2. If required, change the **Files of type** drop-down list.
3. Select the file to import.

To apply the settings to a live device:

1. Drag-and-drop the device entry from the Offline Window area to its entry in the Online Window area.

   Individual settings also can be dragged and dropped between Online and Offline Window areas.

   The order codes must match.

This is what happens:

- CID — For version 7.30 or later, a new URS file generates and moves into a new device folder, generating SCL files from the new URS file. Files in the folder have new time stamps. The CID file retains its time stamp.
- URS — When not IEC 61850 and version is lower than 7.30, the file is added and time stamp is unchanged. When clicking in the software on the tree element, a device folder is created, the original file moves into it, and time stamp is on the URS file is retained.

When EIC 61850 and version is 7.30 or later, the file is added and time stamp is unchanged. When clicking in the software on the tree element, a device folder is created, the original file moves into it, SCL files are generated there, and the "Last modified" time stamp on the URS file changes.

3.11 Connect to D400 gateway

A GE Multilin D400 Substation Gateway can be used to collect data from UR devices in a local area network (LAN). It collects metering, status, event, and fault report data from serial or LAN-based intelligent substation devices, and it pre-processes the data. The D400 supports up to 16 serial and eight network connections, with multiple devices possible on each serial connection. Up to 10 concurrent file transfer sessions are possible, meaning data for up to 10 URs can be transferred at the same time and any additional IEDs are queued on a first-come-first-served basis. The D400 can then upload files to a demilitarized zone (DMZ) server at the enterprise level.

Setup is as follows. For UR devices with the CyberSentry software option, when there is a need to retrieve periodically the logs from the UR securely without a human interface, the following approach can be used. See the D400 manual for configuration details to achieve it.

A UR in the substation can authenticate a user either connecting to a RADIUS server or on the device itself. This depends on the user name used for authentication on a connection. The D400 connects to the UR device using an Ethernet, USB, or serial port on the UR. At the other end, the cable attaches to the rear of D400. Use the D400 software to configure a serial or network communication/connection for the UR, then to configure the IED device blocks/clients for the UR, and then to configure record retrieval. Once configured, the UR and D400 use a keyfile authentication mechanism to establish communication.

For UR devices with the IEC 61850 software option, also use the D400 IEC 61850 Loader software.

When a D400 detects new files available for download from a UR, it connects to the UR and reads the files via sFTP protocol. The following files can be transferred:

- Oscillography files
- Event records
- Log files
- Configuration (setting) files

The D400 information is viewable in its software and in a web browser.

3.11.1 Oscillography files

These are stored in COMTRADE format in the D400 folder system using the UR site and device name.

3.11.2 Event records

These are stored as the EVT.TXT file in the D400 folder system using the UR site and device name.

3.11.3 Log files

Log files can be retrieved for UR 7.0 and later. The following file types are possible, stored in the D400 folder system using the UR site and device name:

- factory_event.txt — Information about change methods and origins. Saved with a "_YYMMDDhhmmss" retrieval time stamp, for example FACTORY_EVENT_170525183124.TXT.
- setting_changes.log — Information on what settings have been changed. Saved with a "_YYMMDDhhmmss" retrieval time stamp, for example SETTING_CHANGES_170525183124.TXT.

3.11.4 Setting files

These are the configuration/settings files in the IEC 61850 SCL/IID format. The ur.iid file is saved with a "_YYMMDDhhmmss" retrieval time stamp, for example ur_170525183124.iid. It is stored in the D400 folder system using the UR site and device name.

C70 Capacitor Bank Protection and Control System

Chapter 4: Interfaces

This chapter explains the EnerVista software interface, the front panel interface, logic diagrams, and Engineer interface for logic design and monitoring.

4.1 EnerVista software interface

4.1.1 Introduction

The EnerVista UR Setup software provides a single facility to configure, monitor, maintain, and troubleshoot relays connected over local or wide-area networks. It can be used while disconnected (offline) or connected (online) to a UR device. In offline mode, settings files can be created for eventual downloading to the device. In online mode, communication with the device is real-time.

The EnerVista UR Setup software is provided with every C70. This chapter outlines the EnerVista software interface. The EnerVista UR Setup help file in the software also provides details for getting started and using the software interface.

4.1.2 Settings files

The EnerVista software supports the following three ways of handling changes to relay settings:

- In offline mode (relay disconnected) to create or edit relay settings files for later transfer to relays
- While connected to a relay to modify relay settings, and then save the settings to the relay
- Create/edit settings files and then write them to the relay while connected to the relay

See the back up section in the Maintenance chapter for instructions on how to create a settings file either offline or online.

Settings files are organized on the basis of file names assigned by the user. A settings file contains data pertaining to the following types of relay settings:

- Device definition
- Product setup
- System setup
- FlexLogic
- Grouped elements
- Control elements
- Inputs/outputs

- Remote resources
- Testing

Factory default values are supplied and can be restored after any changes.

The following communications settings are not transferred to the C70 with settings files:

Modbus Slave Address
Modbus TCP Port Number
RS485 COM2 Baud Rate
RS485 COM2 Parity
COM2 Minimum Response Time
COM2 Selection
RRTD Slave Address
RRTD Baud Rate
IP Address (see end of previous chapter for information)
IP Subnet Mask
IP Routing

When a settings file is loaded to a C70 that is in-service, the following sequence occurs:

1. The C70 takes itself out of service.
2. The C70 issues a UNIT NOT PROGRAMMED major self-test error.
3. The C70 closes the critical fail contact.

The Maintenance chapter outlines how to use a settings file in the .urs format for backup and restore.

4.1.3 Event viewing

In online or offline mode, you can view and analyze data generated by triggered parameters as follows:

- **Event recorder** — The event recorder captures contextual data associated with the last 1024 events, listed chronologically from most recent to oldest
- **Oscillography** — The oscillography waveform traces and digital states are used to provide a visual display of power system and relay operation data captured during specific triggered events

Event records are viewable at software and device-specific levels. Access the former under **Admin > Event Log > View**. Access the latter under **Actual Values > Records > Event Record**.

Event record entries for CyberSentry are explained in the next chapter. The following table outlines some software-level entries.

Table 4-1: Event record descriptions

Event	Description
EnerVista UR Setup SESSION STARTED	The EnerVista software was launched
Language was changed.	The user changed the software language using the **View > Language** menu item
DEFAULT USERS CREATED	The user management window was launched using the **Admin > User Management** menu item
: Successful upload of firmware END Firmware verified Firmware uploaded Firmware erased START: Upload new firmware	The firmware on a device was upgraded
EnerVista UR Setup EVENT LOG CLEARED	The event record was cleared. All event records were deleted using the **Admin > Event Log > Clear** menu item.

4.1.4 File support

The following support applies, where the Settings List is at the bottom left and the Site List is at the top left of the EnerVista window:

- **Execution** — Any EnerVista UR Setup file that is opened launches the application or provides focus to the already opened application. If the file was a settings file (has a .urs extension) that had been removed from the Settings List navigation menu, it is added back to the menu.
- **Drag and Drop** — The device settings and individual settings can be dragged and dropped between the Online and Offline Window areas. Also, any Windows Explorer directory folder is a file drag source and drop target.

  New files that are dropped into the Offline Window are added to the tree, which is automatically sorted alphabetically with respect to settings file names. In the Online Window, files or individual menu items that are dropped in the selected device menu are sent automatically to the online device.

4.1.5 EnerVista main window

The EnerVista UR Setup software window has the following components:

1. Title bar that shows the pathname of the active data view or the name of the software
2. Main window menu bar
3. Main window toolbar
4. Site list / online window area
5. Settings list / offline window area
6. Software windows, with common toolbar
7. Settings file data view windows, with common toolbar
8. Workspace area with data view tabs
9. Status bar
10. Quick action hot links

Figure 4-1: EnerVista UR Setup software window

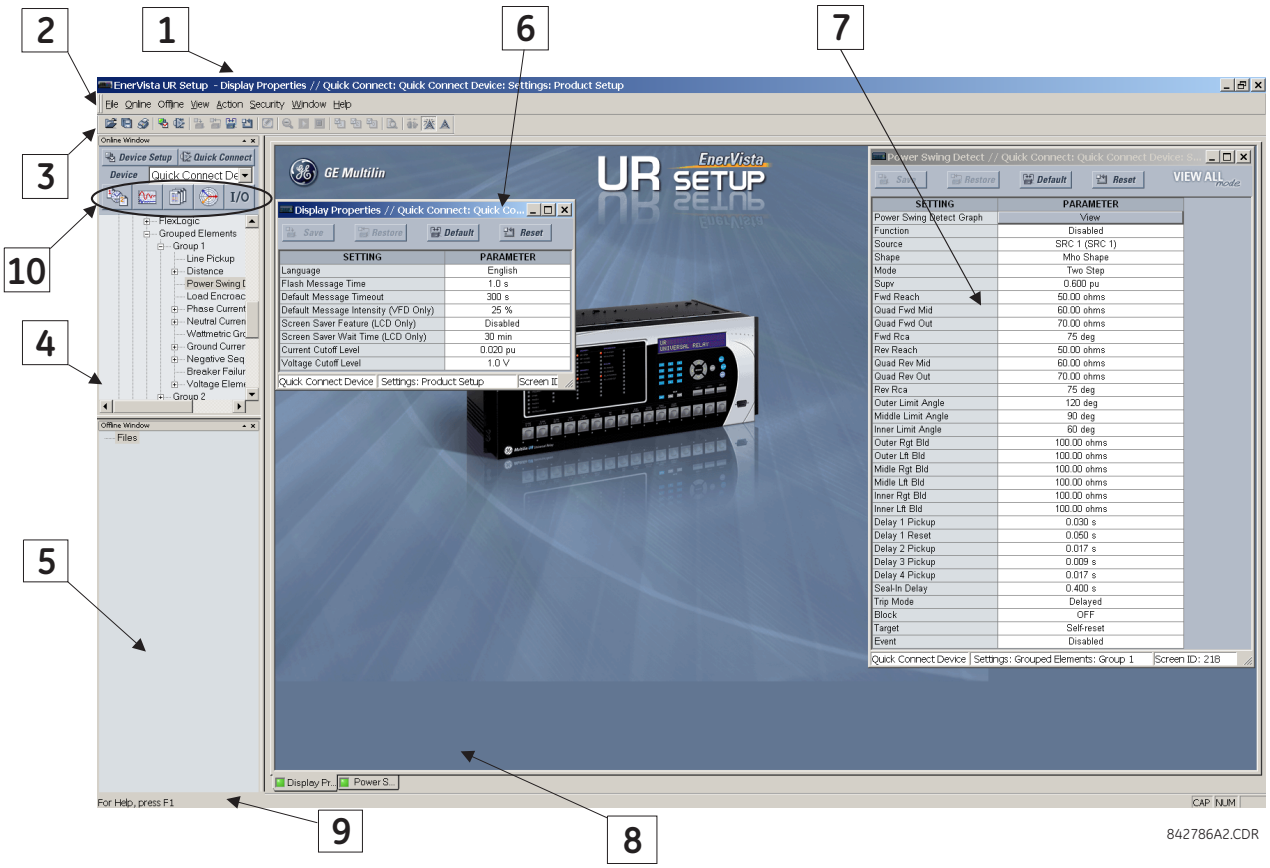

When the Offline Window has devices saved to it, it includes a **Reserved** entry with spare settings when customer-specific functions are provided on a UR.

Figure 4-2: Reserved settings

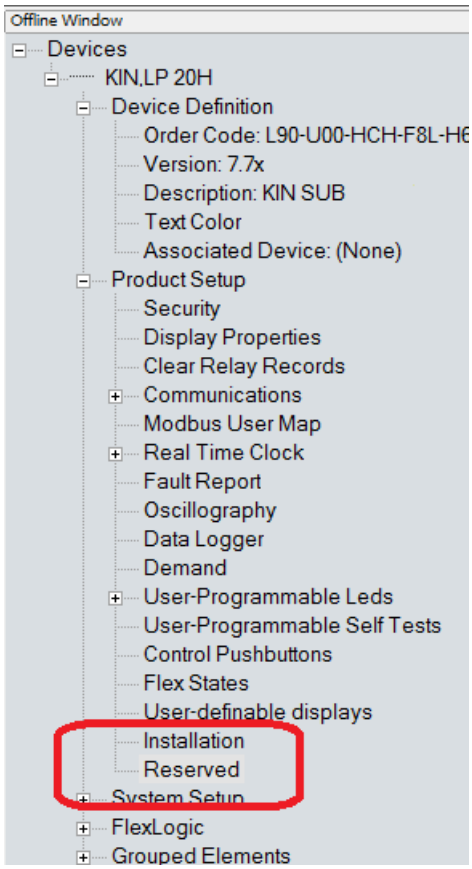

4.1.6 Protection summary window

The Protection Summary is a graphical user interface to manage elements, such as enabling and disabling them. Access it under **Settings > Protection Summary**. See the Settings chapter for information on use.

Figure 4-3: Protection Summary interface (B30 example shown)

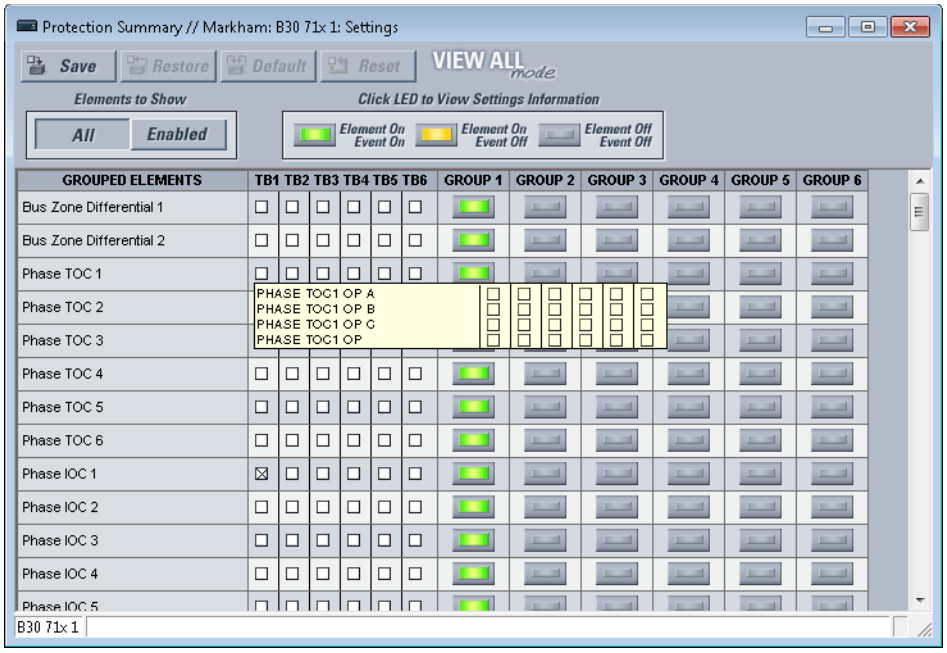

4.1.7 Settings templates

Settings file templates simplify the configuration and commissioning of multiple relays that protect similar assets. An example is a substation that has 10 similar feeders protected by 10 UR F60 relays.

In these situations, typically 90% or greater of the settings are identical among devices. The templates allow engineers to configure and test these common settings, then lock them so that they are not available to users. For example, locked settings can be hidden from view for field engineers, allowing them to quickly identify and concentrate on specific settings.

The remaining settings (typically 10% or less) can be specified as editable and made available to field engineers installing the devices. These are settings such as protection element pickup values and CT and VT ratios.

The settings template mode allows the user to define which settings are visible in the software. Settings templates can be applied to both settings files (settings file templates) and online devices (online settings templates). The functionality is identical for both purposes.

NOTE

Template mode is available in the English software only.

Settings file conversion from previous firmware versions is supported.

4.1.7.1 Enable the settings template

The settings file template feature is disabled by default. It can be enabled in offline or online mode.

To enable in offline mode the settings template for UR settings files:

1. Locate the settings file in the Offline Window area of the EnerVista UR Setup software. If not there, a file can be added from an online device by right-clicking it and selecting the **Add Device to Offline Window** option.
2. In the Offline Window area, right-click the selected device or settings file and select the **Template Mode > Create Template** option.

   The settings file template is now enabled and the file menus display in light blue. The settings file is now in template editing mode. To undo the action, select **Template Mode > Remove Template**.

Alternatively, to apply the settings template to online settings:

1. Locate the device in the Online Window area of the EnerVista UR Setup software.
2. Right-click the device and select the **Template Mode > Create Template** option. The software prompts for a template password. This password is required to use the template feature and must be at least four characters in length.

Figure 4-4: Entering a settings file password

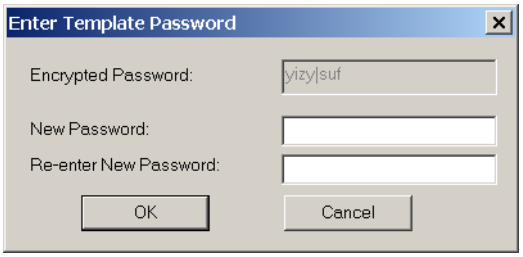

3. Enter and re-enter the new password, then click **OK** to continue.

   The online settings template is now enabled. The device is now in template editing mode.

4.1.7.2 Edit the settings template

The settings template editing feature allows the user to specify which settings are available for viewing and modification in EnerVista UR Setup. By default, all settings except the FlexLogic equation editor settings are locked.

1. With the template already enabled, locate the device or settings file in the Online or Offline Window area in the software.
2. Right-click the device or file and select the **Template Mode > Edit Template** option to verify or place the device in template editing mode (check mark beside option). If prompted, enter the template password then click **OK**.
3. Open the relevant settings window that contains settings to be specified as viewable.

   By default, all settings are specified as locked and displayed against a grey background. The icon on the upper right of the settings window indicates that the EnerVista software is in **EDIT mode**. The following example shows the phase time overcurrent settings window in edit mode.

Figure 4-5: Settings template with all settings specified as locked

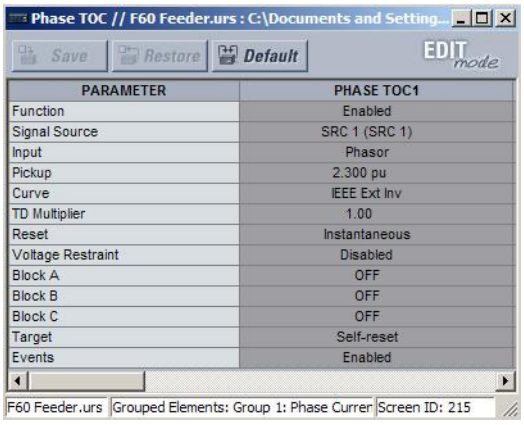

PARAMETER	PHASE TOC1
Function	Enabled
Signal Source	SRC 1 (SRC 1)
Input	Phasor
Pickup	2.300 pu
Curve	IEEE Ext Inv
TD Multiplier	1.00
Reset	Instantaneous
Voltage Restraint	Disabled
Block A	OFF
Block B	OFF
Block C	OFF
Target	Self-reset
Events	Enabled

4. Specify the settings to make viewable by clicking them.

   A setting available to view displays with a yellow background.

Figure 4-6: Settings template with two settings specified as editable

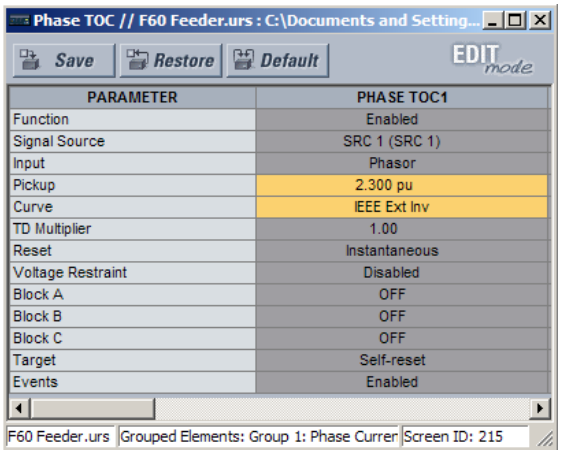

PARAMETER	PHASE TOC1
Function	Enabled
Signal Source	SRC 1 (SRC 1)
Input	Phasor
Pickup	2.300 pu
Curve	IEEE Ext Inv
TD Multiplier	1.00
Reset	Instantaneous
Voltage Restraint	Disabled
Block A	OFF
Block B	OFF
Block C	OFF
Target	Self-reset
Events	Enabled

5. Click the **Save** button to save changes to the settings template.
6. Continue through any other settings window to specify all viewable settings.

   The next time that the device/settings are accessed, only those specified as viewable/editable display in the menu hierarchy.

4

4.1.7.3 Add password protection to a template

GE recommends that templates be saved with password protection to maximize security.

NOTE

When templates are created for online settings, the password is added during the initial template creation step. It does not need to be added after the template is created.

To add password protection to a settings file template:

1. In the Offline Window area, right-click the device and select the **Template Mode > Password Protect Template** option.

   The software prompts for a template password. This password must be at least four characters in length.

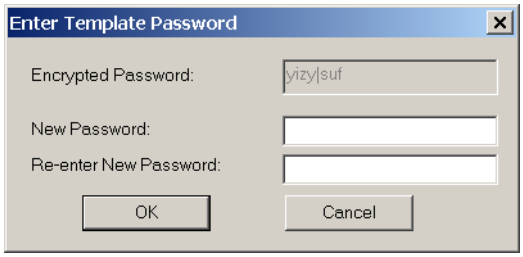

2. Enter and re-enter the new password, then click **OK** to continue.

The settings file template is now secured with password protection.

4.1.7.4 View the settings template

Once all necessary settings are specified for viewing, users are able to view the settings template on the online device or settings file. There are two ways to specify the settings view with the settings template feature:

- Display only those settings available for editing
- Display all settings, with settings not available for editing greyed-out

To display settings available for editing:

1. Right-click the device in the Online or Offline Window area and apply the template by selecting the **Template Mode >**

View In Template Mode option.

2. Enter the template password if prompted, then click **OK** to apply the template.

Once the template has been applied, users are limited to view and edit the settings specified by the template. The effect of applying the template to the phase time overcurrent settings is shown.

Figure 4-7: Applying templates using the View in Template Mode command

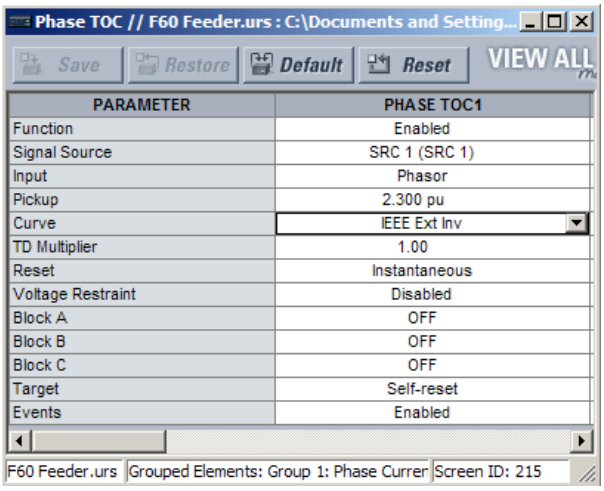

Phase time overcurrent settings window without template applied.

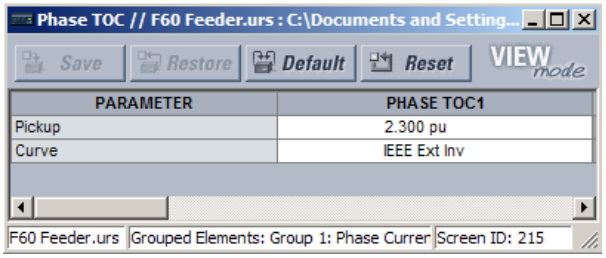

Phase time overcurrent window with template applied via the **Template Mode > View In Template Mode** command. The template specifies that only the Pickup and Curve settings be available.

842858A1.CDR

Viewing the settings in template mode also modifies the settings menu, showing only the settings categories that contain editable settings. The effect of applying the template to a typical settings menu is shown as follows.

Figure 4-8: Applying templates using the View in Template Mode settings command

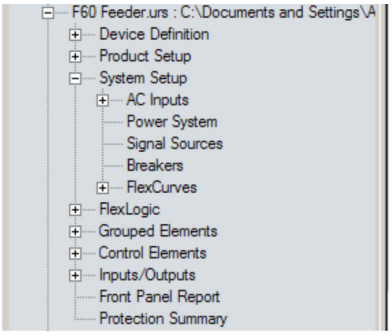

Typical settings tree view without template applied.

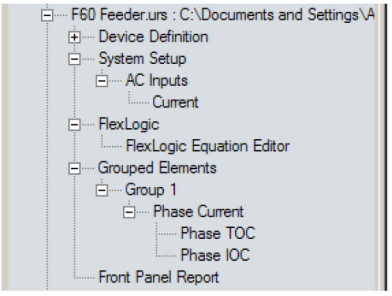

Typical settings tree view with template applied via the **Template Mode > View In Template Mode** command.

842860A1.CDR

To display settings available for editing and settings locked by the template:

1. Right-click the device in the Online or Offline Window area and apply the template by selecting the **Template Mode > View All Settings** option.
2. Enter the template password then click **OK** to apply the template.

Once the template has been applied, users are limited to edit the settings specified by the template, but all settings are shown. The effect of applying the template to the phase time overcurrent settings is shown as follows.

Figure 4-9: Applying templates using the View All Settings command

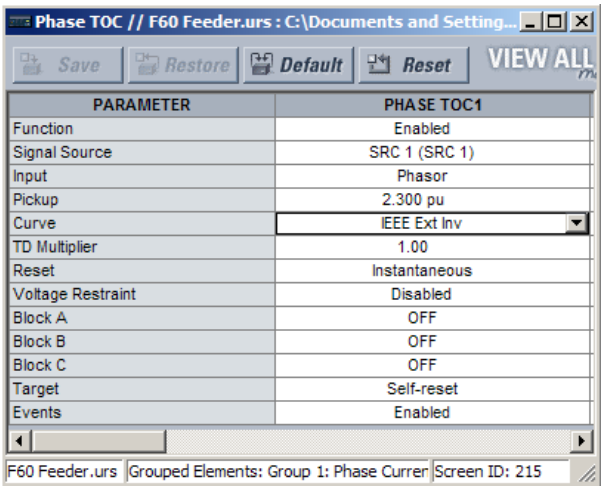

Phase time overcurrent settings window without template applied.

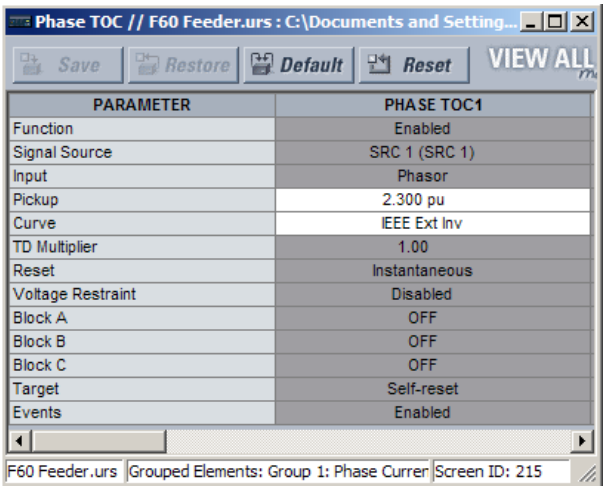

Phase time overcurrent window with template applied via the **Template Mode > View All Settings** command. The template specifies that only the Pickup and Curve settings be available.

842859A1.CDR

4

4.1.7.5 Remove the settings template

Once a settings template is removed, it cannot be reapplied and a new settings template needs to be defined before use.

1. Right-click the device in the Online or Offline Window area and select the **Template Mode > Remove Template** option.
2. Enter the template password if prompted and click **OK** to continue.
3. Confirm that you want to remove the template by clicking **Yes**.

The EnerVista software removes all template information and all settings are available.

4.1.8 Secure and lock FlexLogic equations

The UR allows users to secure some or all FlexLogic equations, preventing unauthorized viewing or modification of critical FlexLogic applications. This is accomplished using the settings template feature to lock individual entries within FlexLogic equations.

Secured FlexLogic equations remain secure when files are sent to and retrieved from any UR-series device.

Locking can be tied to the serial number too.

4.1.8.1 Lock FlexLogic equations

To lock individual entries of a FlexLogic equation:

1. Right-click the settings file or online device and select the **Template Mode > Create Template** item to enable the settings template feature.
2. If prompted, enter the template password.
3. Select the **FlexLogic > FlexLogic Equation Editor** settings menu item.

   By default, all FlexLogic entries are specified as viewable and display against a yellow background. The icon on the upper right of the window also indicates that EnerVista UR Setup is in **EDIT mode**.
4. Specify the entries to lock by clicking them.

   The locked entries display a grey background as shown in the example.

Figure 4-10: Locking FlexLogic equation entries in Edit Mode

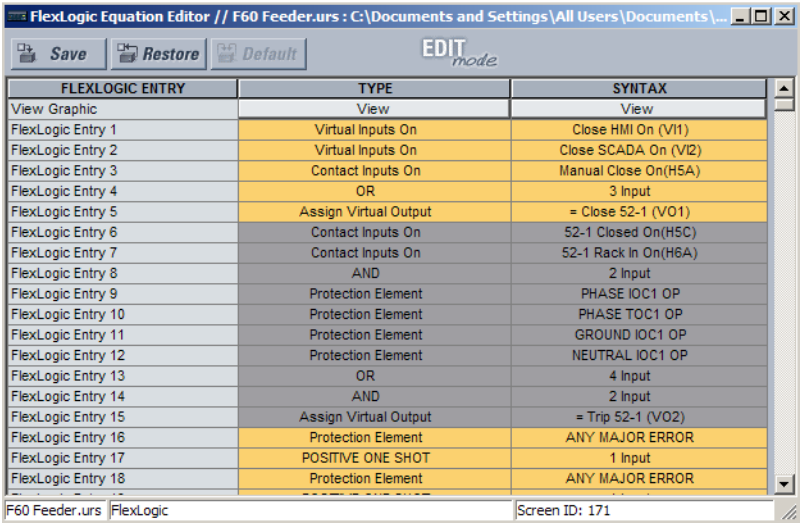

FLEXLOGIC ENTRY	TYPE	SYNTAX
View Graphic	View	View
FlexLogic Entry 1	Virtual Inputs On	Close HMI On (VI1)
FlexLogic Entry 2	Virtual Inputs On	Close SCADA On (VI2)
FlexLogic Entry 3	Contact Inputs On	Manual Close On(H5A)
FlexLogic Entry 4	OR	3 Input
FlexLogic Entry 5	Assign Virtual Output	= Close 52-1 (VO1)
FlexLogic Entry 6	Contact Inputs On	52-1 Closed On(H5C)
FlexLogic Entry 7	Contact Inputs On	52-1 Rack In On(H6A)
FlexLogic Entry 8	AND	2 Input
FlexLogic Entry 9	Protection Element	PHASE IOC1 OP
FlexLogic Entry 10	Protection Element	PHASE TOC1 OP
FlexLogic Entry 11	Protection Element	GROUND IOC1 OP
FlexLogic Entry 12	Protection Element	NEUTRAL IOC1 OP
FlexLogic Entry 13	OR	4 Input
FlexLogic Entry 14	AND	2 Input
FlexLogic Entry 15	Assign Virtual Output	= Trip 52-1 (VO2)
FlexLogic Entry 16	Protection Element	ANY MAJOR ERROR
FlexLogic Entry 17	POSITIVE ONE SHOT	1 Input
FlexLogic Entry 18	Protection Element	ANY MAJOR ERROR

5. Click the **Save** button to save and apply changes to the settings template.
6. Select the **Template Mode > View In Template Mode** option to view the template.
7. Optionally apply a password to the template by right-clicking the device and selecting the **Template Mode > Password Protect Template** option.

Once the template has been applied, users are limited to view and edit the FlexLogic entries not locked by the template. The effect of applying the template to the FlexLogic entries is shown here.

Figure 4-11: Locking FlexLogic entries through settings templates

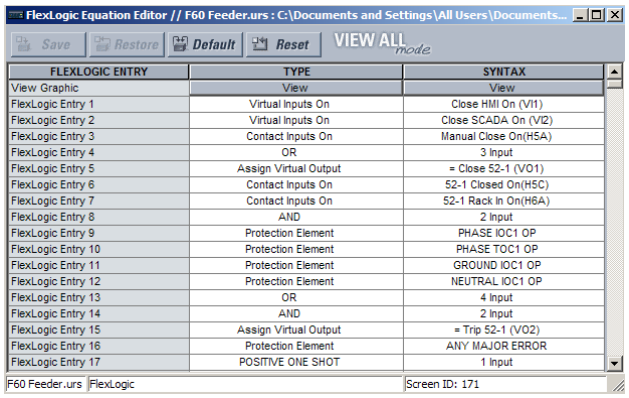

FLEXLOGIC ENTRY	TYPE	SYNTAX
View Graphic	View	View
FlexLogic Entry 1	Virtual Inputs On	Close HMI On (VI1)
FlexLogic Entry 2	Virtual Inputs On	Close SCADA On (VI2)
FlexLogic Entry 3	Contact Inputs On	Manual Close On(H5A)
FlexLogic Entry 4	OR	3 Input
FlexLogic Entry 5	Assign Virtual Output	= Close 52-1 (VO1)
FlexLogic Entry 6	Contact Inputs On	52-1 Closed On(H5C)
FlexLogic Entry 7	Contact Inputs On	52-1 Rack In On(H6A)
FlexLogic Entry 8	AND	2 Input
FlexLogic Entry 9	Protection Element	PHASE IOC1 OP
FlexLogic Entry 10	Protection Element	PHASE TOC1 OP
FlexLogic Entry 11	Protection Element	GROUND IOC1 OP
FlexLogic Entry 12	Protection Element	NEUTRAL IOC1 OP
FlexLogic Entry 13	OR	4 Input
FlexLogic Entry 14	AND	2 Input
FlexLogic Entry 15	Assign Virtual Output	= Trip 52-1 (VO2)
FlexLogic Entry 16	Protection Element	ANY MAJOR ERROR
FlexLogic Entry 17	POSITIVE ONE SHOT	1 Input

Typical FlexLogic™ entries without template applied.

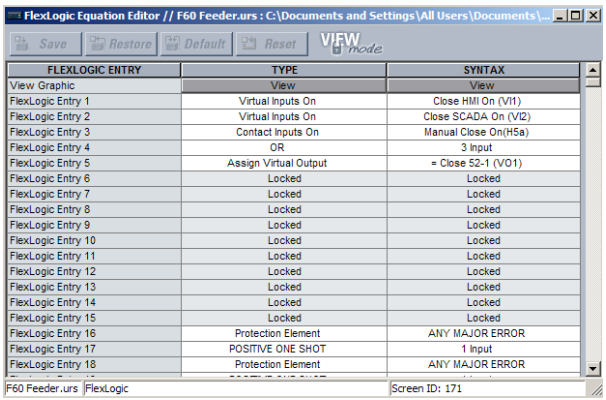

FLEXLOGIC ENTRY	TYPE	SYNTAX
View Graphic	View	View
FlexLogic Entry 1	Virtual Inputs On	Close HMI On (VI1)
FlexLogic Entry 2	Virtual Inputs On	Close SCADA On (VI2)
FlexLogic Entry 3	Contact Inputs On	Manual Close On(H5a)
FlexLogic Entry 4	OR	3 Input
FlexLogic Entry 5	Assign Virtual Output	= Close 52-1 (VO1)
FlexLogic Entry 6	Locked	Locked
FlexLogic Entry 7	Locked	Locked
FlexLogic Entry 8	Locked	Locked
FlexLogic Entry 9	Locked	Locked
FlexLogic Entry 10	Locked	Locked
FlexLogic Entry 11	Locked	Locked
FlexLogic Entry 12	Locked	Locked
FlexLogic Entry 13	Locked	Locked
FlexLogic Entry 14	Locked	Locked
FlexLogic Entry 15	Locked	Locked
FlexLogic Entry 16	Protection Element	ANY MAJOR ERROR
FlexLogic Entry 17	POSITIVE ONE SHOT	1 Input
FlexLogic Entry 18	Protection Element	ANY MAJOR ERROR

Typical FlexLogic™ entries locked with template via the **Template Mode > View In Template Mode** command.

842861A1.CDR

The FlexLogic entries are also shown as locked in the graphical view and on the front panel display.

Figure 4-12: Secured FlexLogic in graphical view

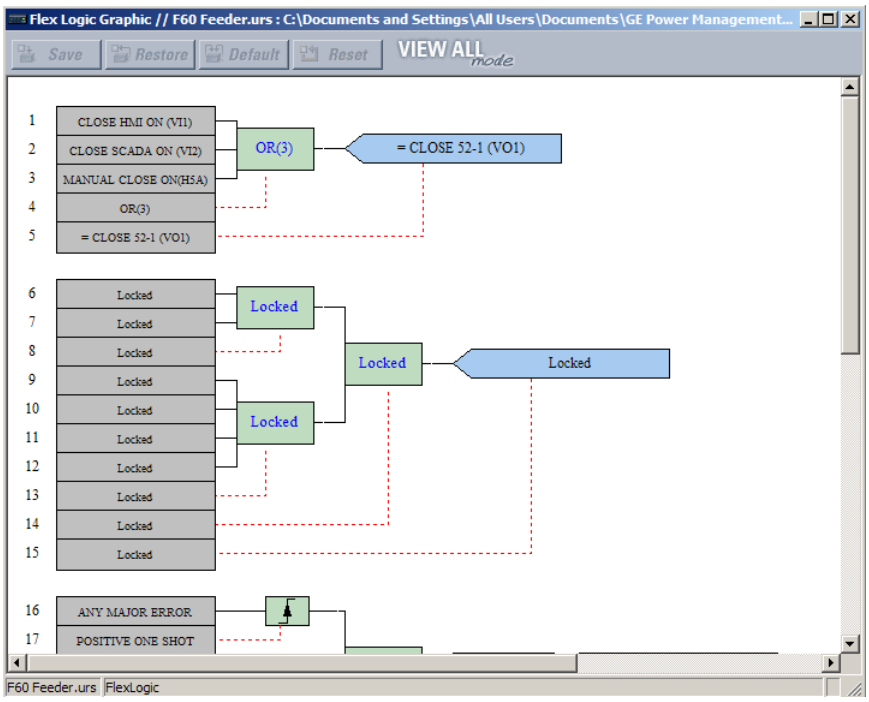

4.1.8.2 Lock FlexLogic equations to the serial number

A settings file and associated FlexLogic equations also can be locked to a UR serial number. Once FlexLogic entries in a settings file have been secured, use the following procedure to lock the settings file to a serial number. A serial number is viewable under **Actual Values > Product Info > Model Information**, the inside front panel, and the rear of the device.

1. Right-click the setting file in the Offline Window area and select the **Edit Device Properties** item. The window opens.

Figure 4-13: Settings file properties window

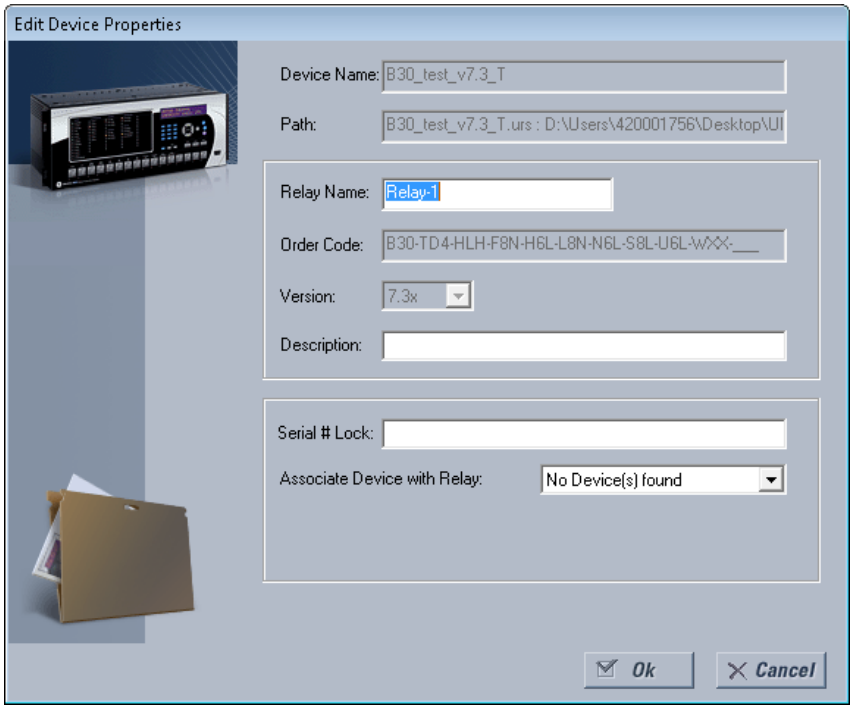

2. Enter the serial number of the C70 device to lock to the settings file in the **Serial # Lock** field.
3. Click the **OK** button to apply the change. The serial number is not validated.

The settings file and corresponding secure FlexLogic equations are now locked to the C70 device specified by the serial number.

4.1.9 Settings file traceability

A traceability feature for settings files allows the user to quickly determine if the settings in a C70 device have been changed since the time of installation from a settings file. When a settings file is transferred to a C70 device, the date, time, and serial number of the C70 are sent back to EnerVista UR Setup and added to the settings file on the local computer. This information can be compared with the C70 actual values at any later date to determine if security has been compromised.

The traceability information is only included in the settings file if a complete settings file is either transferred to the C70 device or obtained from the C70 device. Any partial settings transfers by way of drag and drop do not add the traceability information to the settings file.

Figure 4-14: Settings file traceability

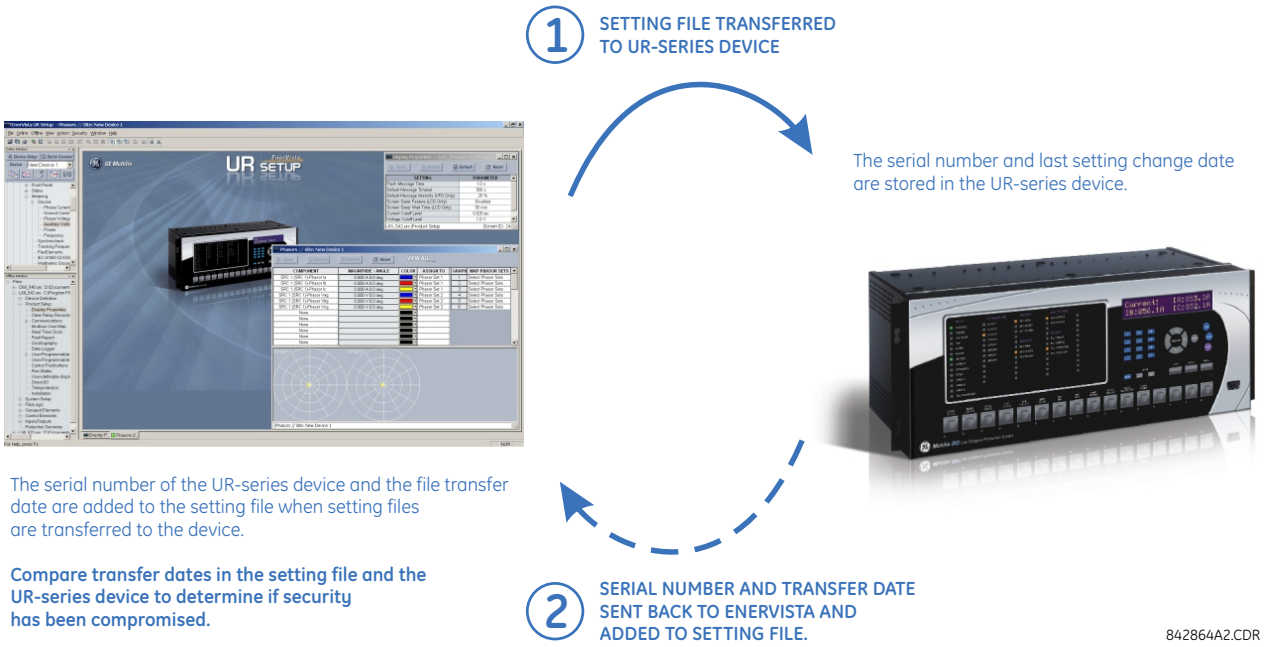

With respect to the figure, the traceability feature is used as follows.

- The transfer date of a settings file written to a C70 is logged in the relay and can be viewed in the EnerVista software or the front panel display. Likewise, the transfer date of a settings file saved to a local computer is logged in the EnerVista software.
- Comparing the dates stored in the relay and on the settings file at any time in the future indicates if any changes have been made to the relay configuration since the settings file was saved.

4.1.9.1 Settings file traceability information

The serial number and file transfer date are saved in the settings files when they are sent to a C70 device.

The C70 serial number and file transfer date are included in the settings file device definition within the EnerVista UR Setup offline window as shown in the example.

Figure 4-15: Device definition showing traceability data

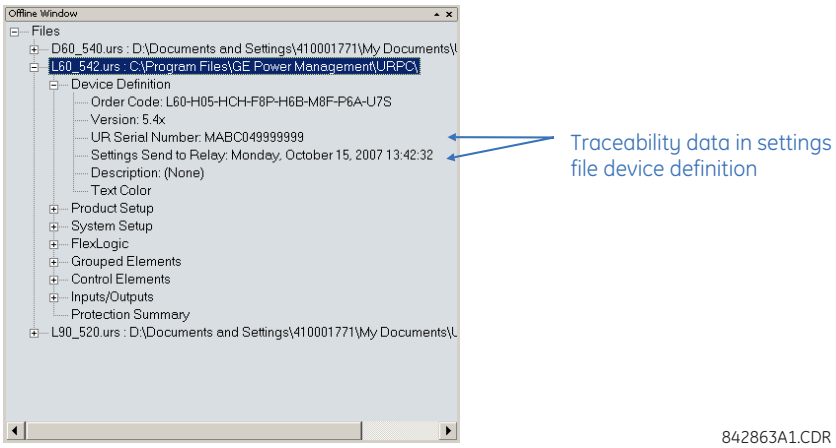

This information is also available in printed settings file reports as shown in the example. A report is generated by right-clicking and selecting the **Print Settings** option.

Figure 4-16: Settings file report showing traceability data

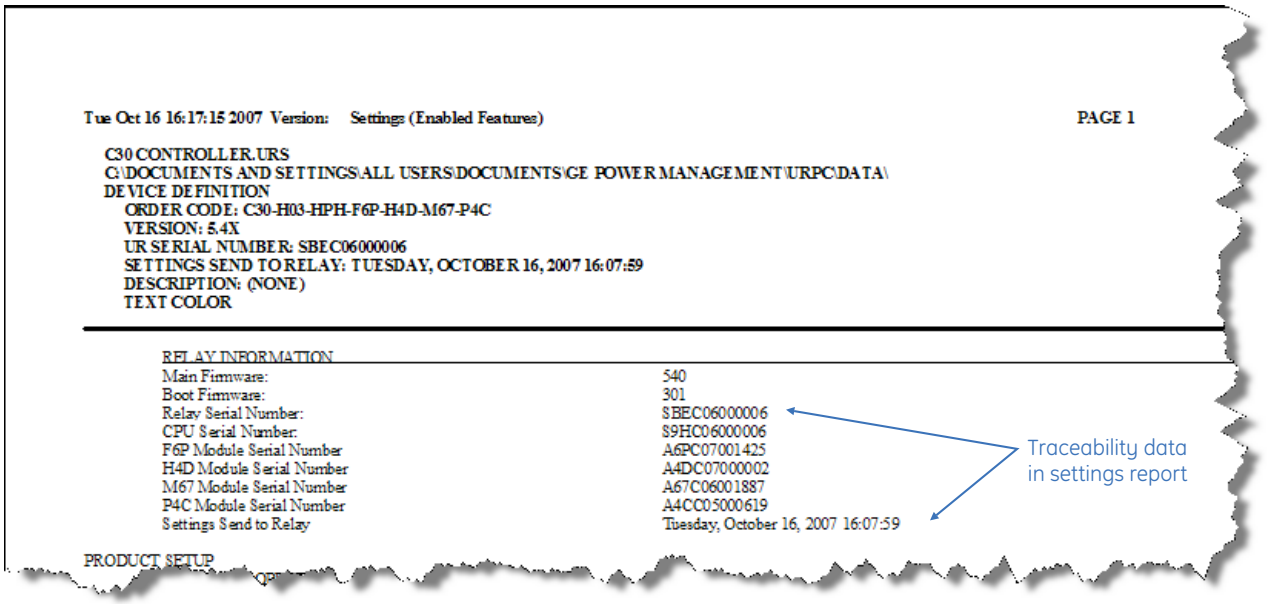

4.1.9.2 Online device traceability information

The C70 serial number and file transfer date are available for an online device through the actual values. Select the **Actual Values > Product Info > Model Information** menu item within the EnerVista online window as shown in the example.

Figure 4-17: Traceability data in Actual Values window

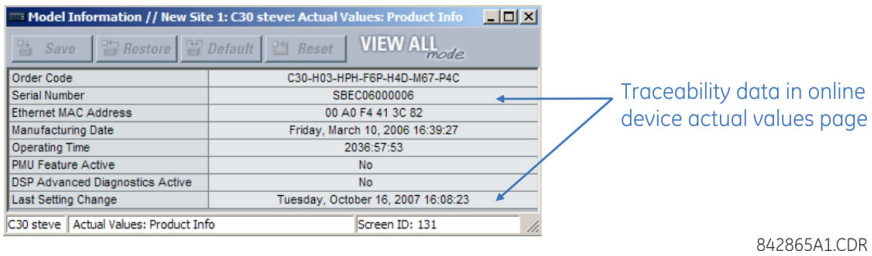

This information is also available from the front panel display through the following actual values:

ACTUAL VALUES ⇨⇩ PRODUCT INFO ⇨ MODEL INFORMATION ⇨⇩ SERIAL NUMBER

ACTUAL VALUES ⇨⇩ PRODUCT INFO ⇨ MODEL INFORMATION ⇨⇩ LAST SETTING CHANGE

4.1.9.3 Additional traceability rules

The following additional rules apply for the traceability feature:

- If the user changes any settings within the settings file in the offline window, then the traceability information is removed from the settings file
- If the user creates a new settings file, then no traceability information is included in the settings file
- If the user converts an existing settings file to another revision, then any existing traceability information is removed from the settings file
- If the user duplicates an existing settings file, then any traceability information is transferred to the duplicate settings file

4.2 Front panel interface

This section explains use of the enhanced, basic, and graphical front panels.

4.2.1 Front panel

4.2.1.1 Enhanced front panel

The enhanced front panel consists of LED panels, an RS232 port, keypad, LCD display, control pushbuttons, and optional user-programmable pushbuttons.

The front panel is hinged to allow access to removable modules inside the chassis. The C70 enhanced front panel can be horizontal or vertical. The following figure shows the horizontal front panel.

Figure 4-18: Enhanced horizontal front panel

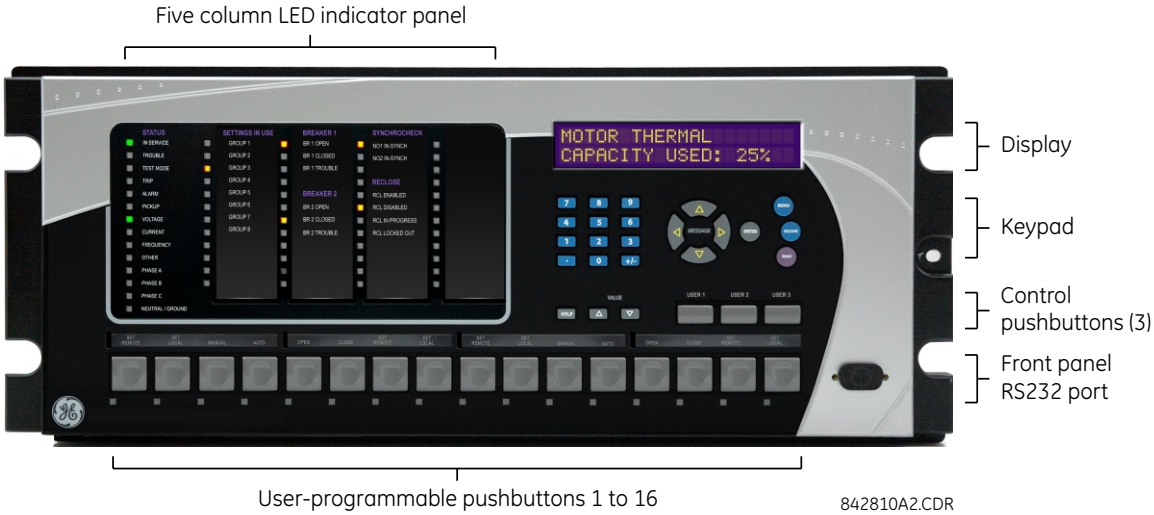

4.2.1.2 Basic front panel

The basic front panel consists of LED panels, an RS232 port, keypad, LCD display, control pushbuttons, and optional user-programmable pushbuttons.

The front panel is hinged to allow easy access to removable modules inside the chassis. There is also a removable dust cover that is to be removed when accessing the keypad. The C70 basic front panel can be horizontal or vertical. The following figure shows the horizontal front panel.

Figure 4-19: Basic horizontal front panel

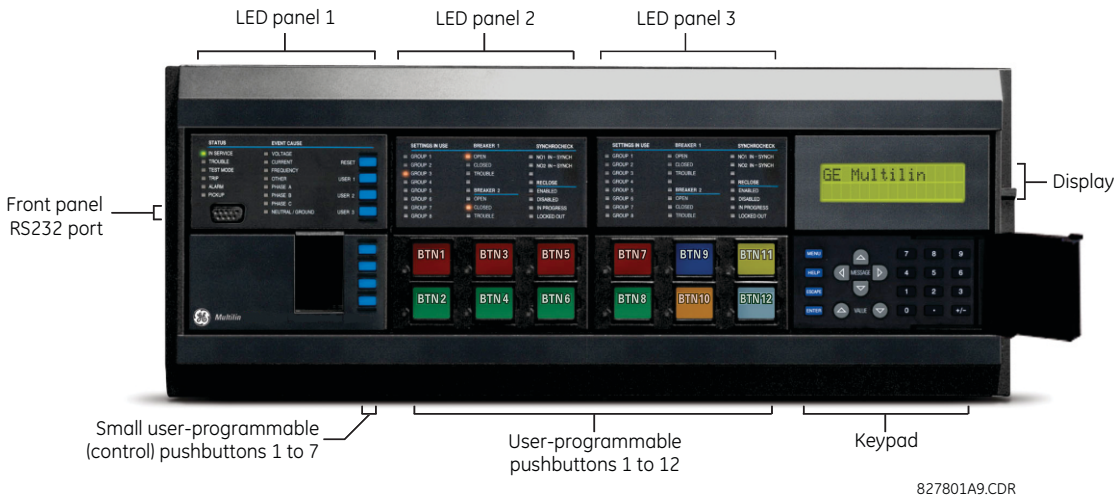

The following figure shows the vertical front panel for relays ordered with the vertical option.

Figure 4-20: Basic vertical front panel

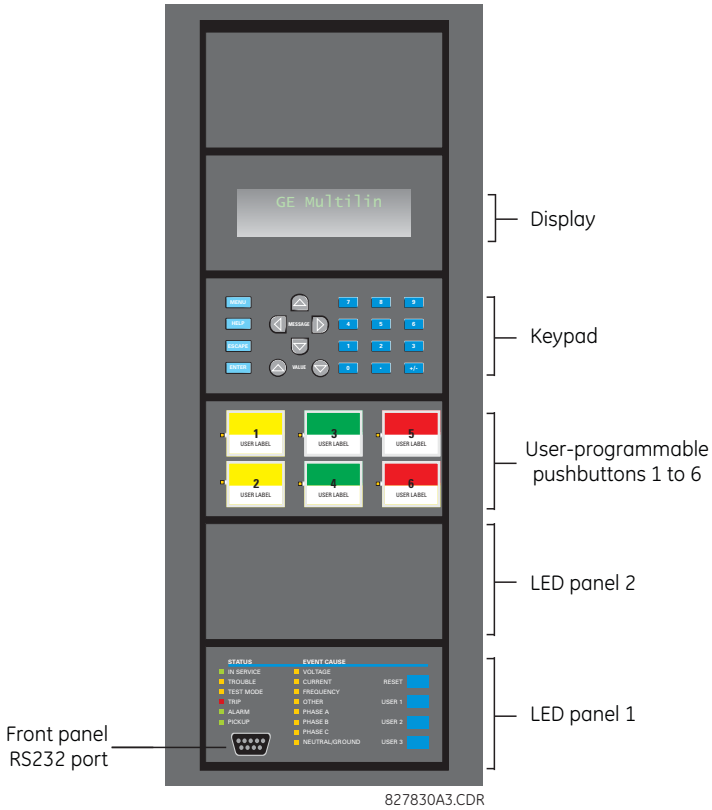

4

4.2.1.3 Graphical front panel

The graphical front panel consists of a USB port, LED panel, color screen display, user-programmable pushbuttons, and navigation keys. The screen is used to read data, such as metering actual values, alarms, self-test messages, and event records, and for viewing single-line diagrams. Settings can be changed on the front panel, except for the graphical front panel itself and for IEC 61850. The USB port connects to a computer with the EnerVista software and can be used to upgrade the relay and to transfer files and settings. The USB port is the square type B.

User-programmable pushbuttons 9 to 16 can be programmed among the 10 pushbuttons on the left and right sides of the display.

Figure 4-21: Graphical front panel

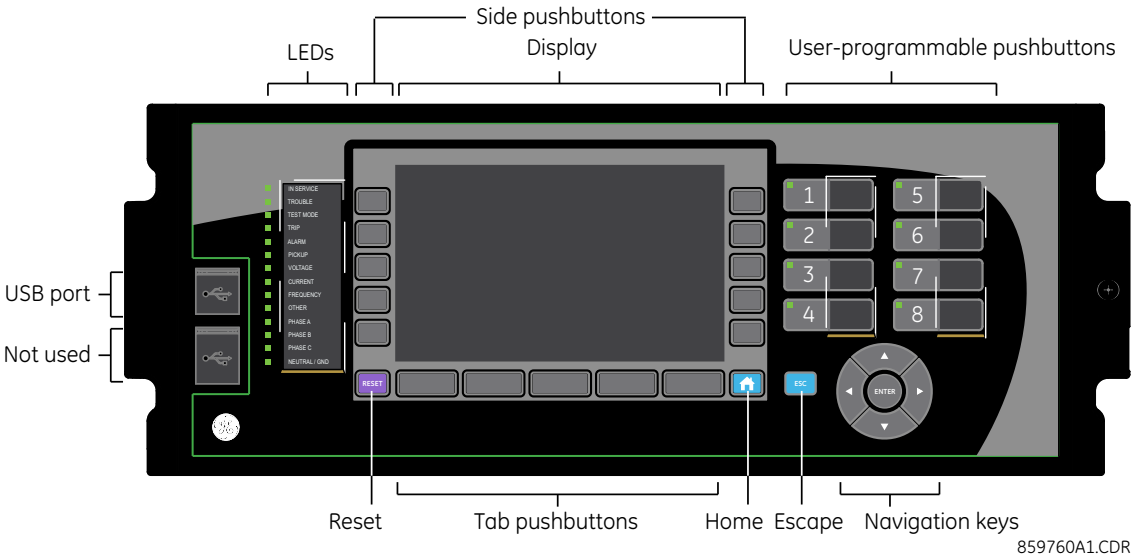

4.2.2 Front panel display

4.2.2.1 Enhanced and basic front panels

Messages display on a backlit liquid crystal display (LCD) to make them visible under poor lighting conditions. When the keypad and display are not actively being used, the display defaults to user-defined messages. Any high-priority event-driven message overrides the default messages.

Up to 20 characters can be used to configure some setting names in the software, while up to 12 characters display on the front panel. A tilde ~ symbol is used for the twelfth character on the front panel when a name extends beyond the 12 character limit. An example is shown for a Virtual Input.

Figure 4-22: Tilde symbols displays with names 12 or more characters long

The front panel can be viewed and used in the EnerVista software, for example to view an error message displayed on the front panel or the LEDs.

To view the front panel in EnerVista software:

1. Click **Actual Values > Front Panel**, then any option.

Figure 4-23: Front panel use in the software (C60 shown)

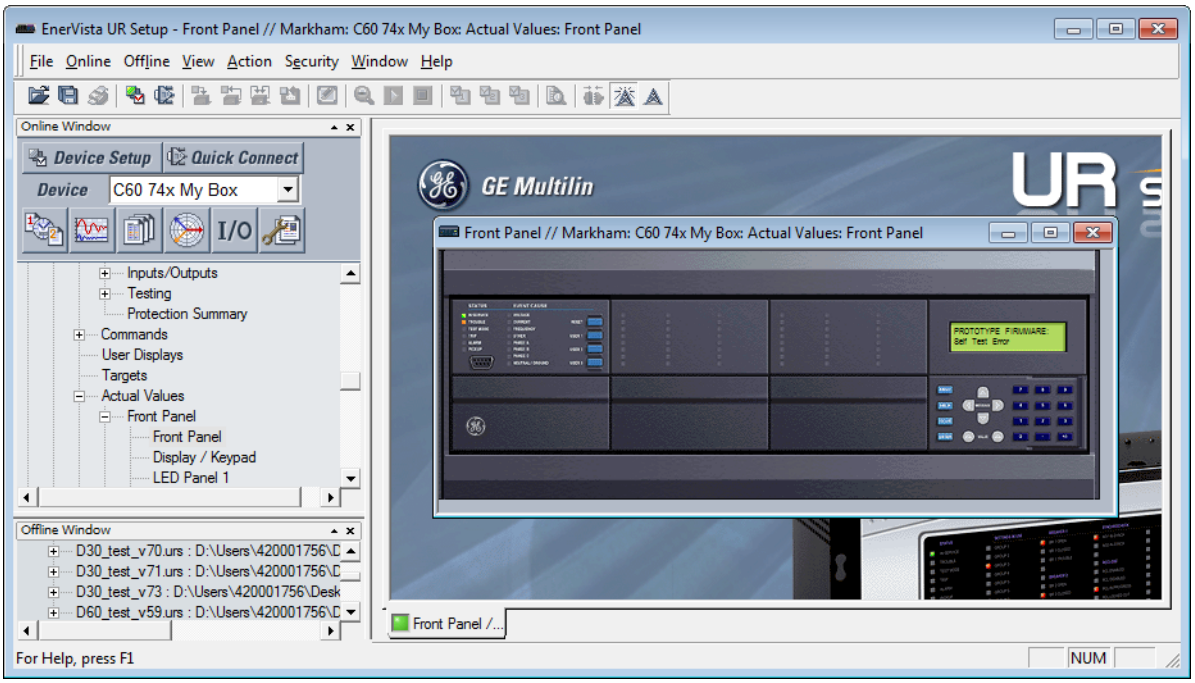

4.2.2.2 Graphical front panel

The graphical front panel has a seven-inch (17.8 cm) color liquid crystal display (LCD). The display provides convenient access to operational data generated by the relay, enables local control of power system devices, and allows display/editing of settings.

Header content varies by page. The home page displays any active icons, such as security status, active setting group, and active target messages. It shows the date and time of the relay. If the relay synchronizes to an external time source via PTP, IRIG-B, SNTP, and so on, the date/time is shown in white, and otherwise in yellow. On pages other than the home page, the header displays the name of the page.

The footer dynamically labels the Tab, or control, pushbuttons immediately below.

Page content displays between the header and footer.

Figure 4-24: Home page example with default content (product information)

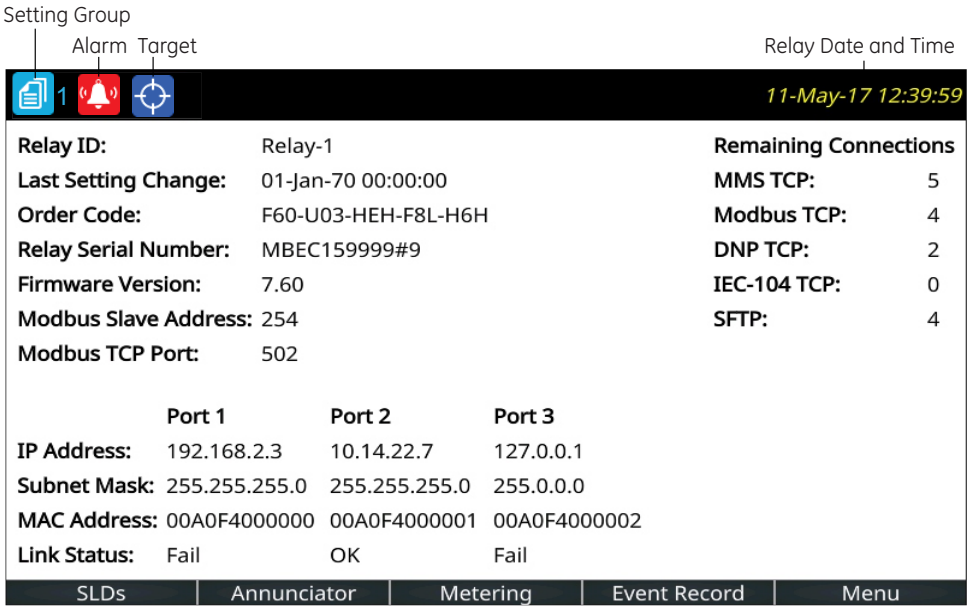

859850A1.cdr

There are multiple ways to navigate pages, by using the pushbuttons and the menu hierarchy. The menu hierarchy is similar to the other front panels whereby you select a submenu using Up and Down arrow pushbuttons, and press the **ENTER** or Right pushbutton. On setting pages, opening a setting for editing is done by highlighting the setting using Up and Down pushbuttons, and pressing the **ENTER** or Right pushbutton.

Home page

Press the **Home** pushbutton to display the root page no matter the state. Any edit, control, or password entry sessions are cancelled. The header shows several relay/system status icons. The default content of the home page is the product information page and can be user-configured to show the content of any single-line diagram page, annunciator page, metering page, or event records page for example. The Tab pushbuttons on the bottom row each navigate to their page. The home page displays for a user-configured time period, then scrolls through user-configured pages, a feature referred to as rolling.

Holding the **Home** pushbutton for one second displays the product information page. The Home page also can display when settings are saved.

Security indicator, showing how many people are logged in, including local and remote users. The lock is red when one or more users are logged in and other otherwise green.
When no users are logged in because login is not required, an icon does not display.

Identifies the active setting group number (not shown)

Displays when an abnormal annunciator alarm is present. Navigate to the Annunciator for details. When there are no such alarms, the icon does not display.
Even when you acknowledge/reset an alarm, the icon displays as long as the condition remains. For example, a breaker trouble alarm displays, you acknowledge it, but the icon remains because the breaker trouble remains.

Active targets symbol, where targets are error messages.
View error messages by pressing the **Menu** Tab pushbutton, then accessing the **TARGETS** menu. Pressing the **RESET** button clears those messages that can be.

Configure the home page in the software under **Settings > Product Setup > Graphical Panel > Home Page**. The menu does not display when there is no graphical front panel.

Rolling mode

After a user-defined period of inactivity, the graphical front display rolls among up to 10 user-selected pages. The roll-to-pages are selected in the EnerVista software, with the defaults being the product information page. Each page displays for less than five seconds. Also, the display backlight intensity is lowered after a configurable period to a user-defined level (0, 10, 20, or 30%); lower intensity extends the life of the display.

Configure rolling mode in the software under **Settings > Product Setup > Graphical Panel > Rolling Mode**.

Operation works as follows:

- Press the **Home** pushbutton or **ESCAPE** pushbutton twice to cancel rolling, restore full backlight intensity, and return to the Home page
- Press the **ENTER**, **ESCAPE**, or a pushbutton to pause rolling once and restore full backlight intensity

Rolling is disabled by setting the delay to 0.

The following buttons display at the top of the window:

- **Save** — Updates the connected device if online or the open setting file if offline with changes made
- **Restore** — Undoes changes that have not been saved
- **Default** — Changes all rolling mode settings to their factory default values
- **Reset** — Displays factory default values. Previous changes are not lost unless you save the reset window.

Single-line diagrams

A single-line diagram, or mimic diagram, is a line drawing of elements in an electrical system. The graphical front panel displays up to five single-line diagrams. Each can be configured to show the arrangement of a portion of the power system, the status of circuit breakers and of ground and disconnect switches, user-programmable pushbuttons, and metering and status values. Each also enables control of the displayed power system devices.

One diagram is provided by default, single_bus_line_dsc.mif, which can be modified.

Configure the diagrams under **Settings > Product Setup > Graphical Panel > Single Line Diagram Editor**.

Each single-line diagram page has a user-configurable name that appears in the header and in the footer Tab pushbutton label. Factory default names are SLD 1 to SLD 5. Pages that have no configured content have a blank Tab pushbutton label, and the Tab pushbutton does nothing. The label for the current page has a blue background.

Figure 4-25: Toolbar options for single-line diagram

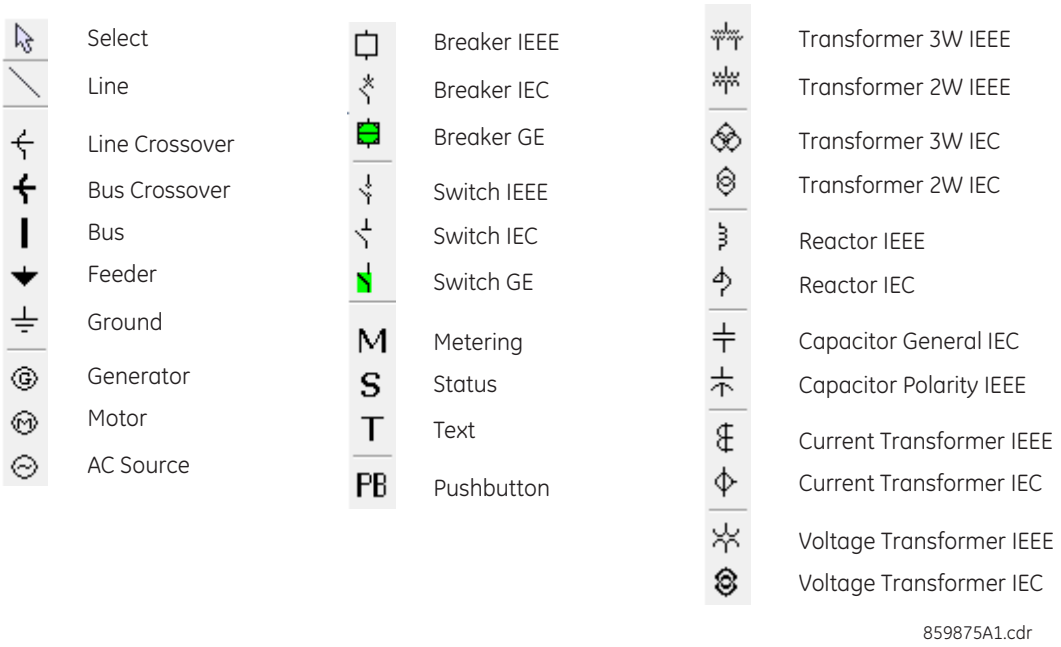

The letters T, S, B, R, and X next to a controllable element have the following meaning. An example (TSB) is shown in the next figure.

- T — The element is "tagged." Local and remote control of the device are inhibited, both open and close. Tripping is unaffected unless additional logic has been configured.
- S — The position indication of the device is substituted with a manually entered value
- B — Blocking open/close command is bypassed
- R — Autoreclose is enabled and not blocked
- X — The device is out-of-service and control is not available

Single-line diagram example

The following example outlines how to create a circuit breaker diagram, then how to close the second circuit breaker. The figure shows six switches (SW, M), two breakers (CB), feeder (arrow), and ground (lined arrow).

Figure 4-26: Single-line diagram of open circuit breakers

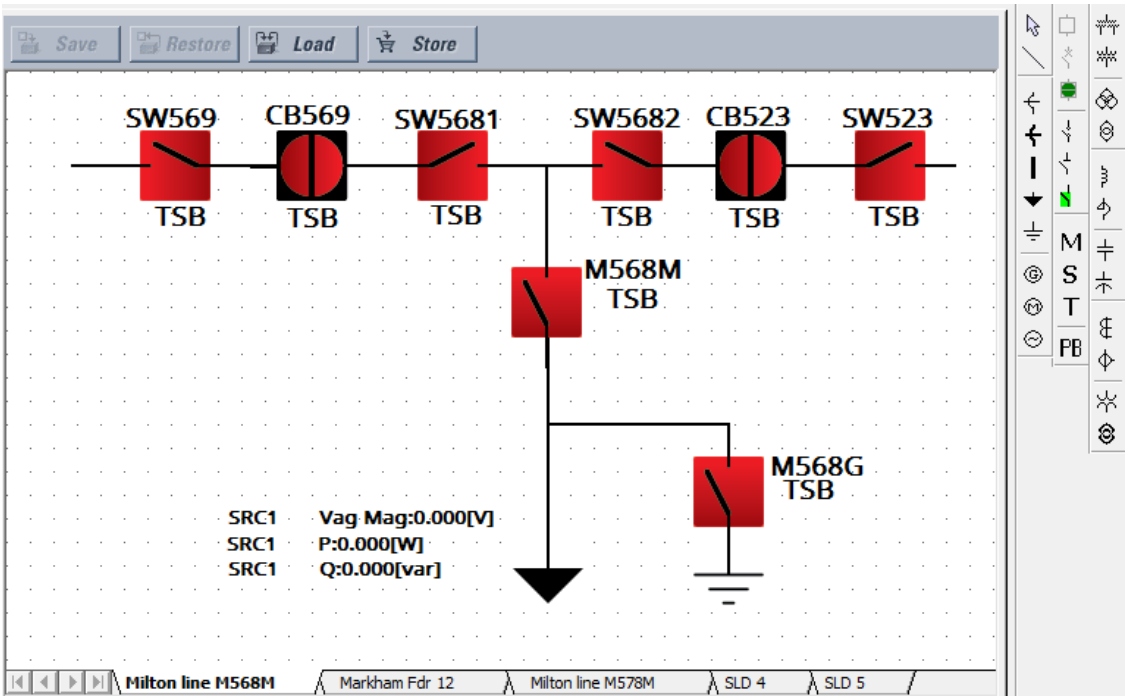

Under **Settings > System Setup > Switches** and **Breakers**, enable and name the six switches and two breakers. Switch 6, M568G, has the A/3 Pole Opened setting on.

Figure 4-27: Configure Breaker and Switch settings

Save | Restore | Default | Reset | VIEW ALL mode

SETTING	PARAMETER
Switch 1 Function	Enabled
Switch 1 Name	SW569
Switch 1 Mode	3-Pole
Switch 1 Open	OFF
Switch 1 Block Open	OFF
Switch 1 Close	OFF
Switch 1 Block Close	OFF
Switch 1 Phase A/3 Pole Closed	ON
Switch 1 Phase A/3 Pole Opened	OFF
Switch 1 Phase B Closed	OFF

Switch 6 Function	Enabled
Switch 6 Name	M568G
Switch 6 Mode	3-Pole
Switch 6 Open	OFF
Switch 6 Block Open	OFF
Switch 6 Close	OFF
Switch 6 Block Close	OFF
Switch 6 Phase A/3 Pole Closed	OFF
Switch 6 Phase A/3 Pole Opened	ON
Switch 6 Phase B Closed	OFF
Switch 6 Phase B Opened	OFF

Save | Restore | Default | Reset | VIEW ALL mode

SETTING	PARAMETER
Breaker 1 Function	Enabled
Breaker 1 Push Button Control	Enabled
Breaker 1 Tagging	Enabled
Breaker 1 Substitution	Enabled
Breaker 1 Bypass	Enabled
Breaker 1 AR Block	Enabled
Breaker 1 Name	CB569
Breaker 1 Mode	3-Pole
Breaker 1 Open	OFF
Breaker 1 Block Open	OFF
Breaker 1 Close	OFF
Breaker 1 Block Close	OFF
Breaker 1 Phase A/3-Pole Closed	ON
Breaker 1 Phase A/3-Pole Opened	OFF
Breaker 1 Phase B Closed	OFF

4

In the EnerVista software, open the single-line diagram editor under **Settings > Product Setup > Graphical Panel > Single Line Diagram Editor**.

Add the four switches for the top line by clicking the GE switch symbol in the toolbar, then clicking in the window. (If the UR device is not online, the software attempts to connect.) Right-click to edit properties. Rotate switches SW569 and SW5682 to 270 degrees. Rotate switches 5681 and SW523 to 90 degrees. Ignore the TSB text.

Add the two lower switches. Leave rotation at 0 degrees.

Add the two breakers by clicking the GE breaker symbol in the toolbar, then click in the window. Right-click to edit properties, rotating 90 degrees and setting the color to red (open).

Draw lines to fill in the gaps between the switches and breakers by clicking the line symbol in the toolbar, then clicking and dragging on the canvas to draw a line. Do not draw a single line for the top line, but instead draw several small lines.

Add the feeder arrow head by clicking the symbol in the toolbar, then clicking the end of the line.

Add the ground symbol by clicking the symbol in the toolbar, then clicking the end of the line.

Add three metered values by clicking the M symbol in the toolbar, then clicking near the feeder arrow. Double-click to edit. The three metered values are SRC1 Vag Mag, SRC 1 P, and SRC 1 Q.

Name the page by right-clicking the bottom tab. Here, page 1 is renamed "Milton line M568M."

Note that active symbols in the toolbar display and those that are inactive are greyed-out.

The diagram has been created. Save it by clicking the **Save** button.

Next is to close circuit breaker CB523. This circuit breaker is shown at the top right of the figure. A vertical line means that it is open, and the color can be set as red or green.

On the graphical front panel, press the **Home** pushbutton, then press the **SLDs** pushbutton to activate the first single-line diagram page.

Figure 4-28: Single-line diagram on graphical front panel

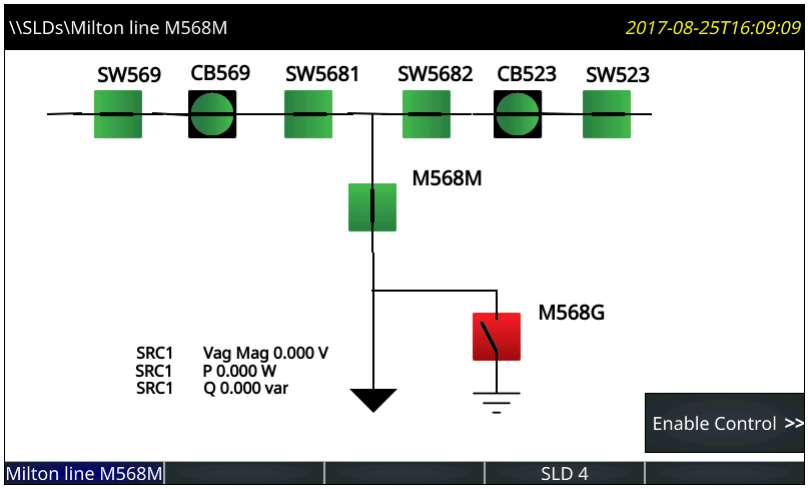

4

Press the **Enable Control** pushbutton. The side pushbutton labels display.

Figure 4-29: Side pushbutton display on graphical front panel

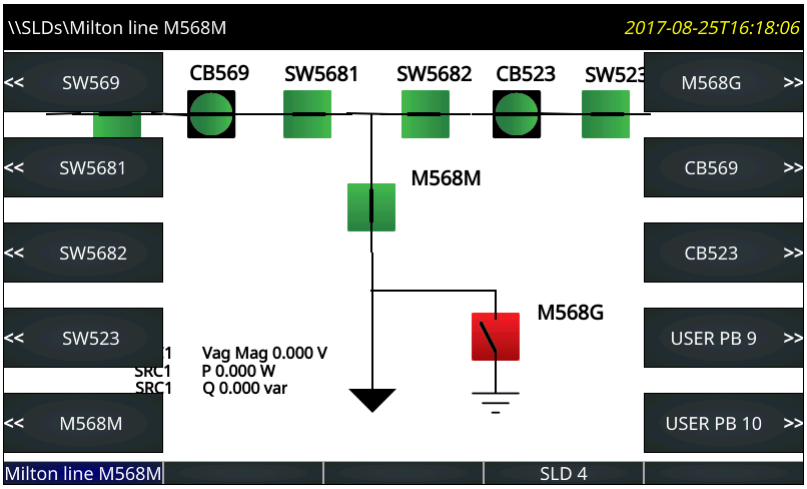

Press the **CB523** breaker pushbutton. Its menu displays.

Figure 4-30: Pushbuttons to control the breaker

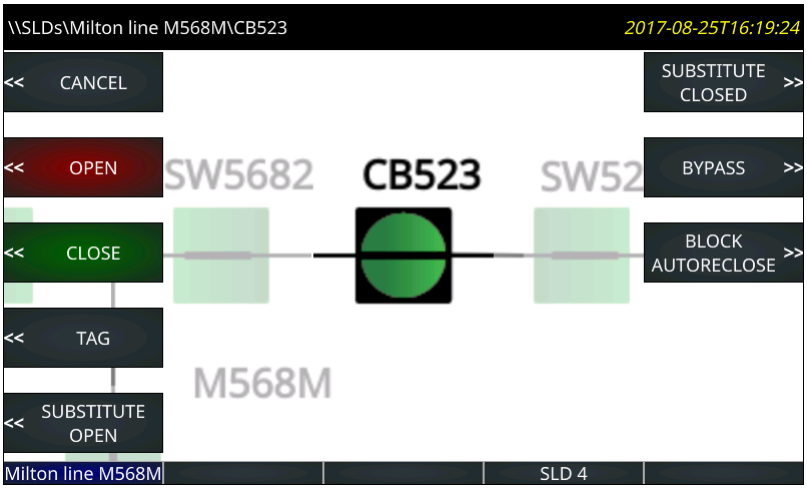

Press the pushbutton to close the breaker, confirming the action at the prompt.

In this diagram, the two circuit breakers have hard-coded actions available to them. No action is possible on the switches.

Note the USER PB 9 and 10 entries in the earlier figure. As outlined later, these are activated by clicking the PB icon on the software toolbar. These two pushbuttons can be configured under **Settings > Product Setup > User-Programmable Pushbuttons**.

Single-line diagram editor use

Start the application in the EnerVista software under **Settings > Product Setup > Graphical Panel > Single Line Diagram Editor**.

The following buttons display at the top of the window:

- **Save** — Updates the connected device if online or the open setting file if offline with changes made
- **Restore** — Undoes changes that have not been saved
- **Load** — Opens single-line diagram files, which replaces one or all windows with that in the file selected
- **Store** — Saves all single-line diagrams as a .mif file. Because single-line diagrams are not retained when using the **Convert Device Settings** function, for example when converting in the Offline Window area from version 7.6 to 7.7, GE recommends making backup files using this function.

On the right side of the window is a toolbox containing the components that can be added to the window. These include line, breaker, disconnect, metering value, status value, text, and miscellaneous power system elements. To create the single-line diagram, click the symbol, then click in the window. Once in the window, the component can be positioned and its properties modified. When using the pointing device to position a component, the component can snap to the nearest snap point. Snap points are in a 4 x 4 rectangular grid. The keyboard arrow keys move the selected component(s) in one pixel increments when snap locations are inadequate. Multiple components can be selected and moved or deleted as a group, or copied and pasted to another location. Right- or double-clicking a component opens the properties window.

Ctrl+A selects all objects in a diagram.

Lines

Line components represent power system buses or electrical connections between power system elements. They can also be used as visual dividers and underline.

To add a line component, click it in the toolbox, then click in the window. Double-click a line to open its properties window to set orientation.

Figure 4-31: Line and bus crossover symbols

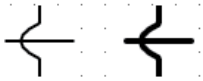

Static symbols

Static symbols depicting power system elements are available. For information, see the ANSI/IEEE 315A and IEC 60617 standards.

Up to 32 static symbols can be used per single-line diagram.

To add a symbol, click it in the toolbox, then click in the window. Double-click the symbol to open its properties window to set orientation.

Figure 4-32: IEEE and IEC static symbols

Device	Symbols
3W Transformer	
2W Transformer	
Rotating machines	G M ~
Reactor	
Ground	
Connector, Bus, Feeder, Crossover	
CT	
VT / PT	
Capacitor	

Breaker and disconnect components

Breaker components and disconnect components are interfaces to the UR breaker control elements and disconnect switch elements. On a UR device they show dynamically the breaker or disconnect status as calculated by the element, and provide means to open, close, tag, bypass interlock, and substitute (force status of) the element. Breaker components in addition provide means to enable/disable breaker autoreclose.

Each breaker and disconnect component can be configured to use UR-style symbols, IEC symbols, or simple square/slash symbols as shown in the following figure. The symbols assume horizontal symbol orientation, red - closed color, and green - open scheme. With vertical orientation, they are rotated 90 degrees.

Figure 4-33: Single-line diagram symbols

	IEEE style (IEEE 315)	IEC Style (IEC 60617)	GE Style
Disconnect Switch (Open)			(1)
Disconnect Switch (Intermediate)			
Disconnect Switch (Closed)			(1)
Disconnect Switch (Bad Status/Disabled)	?	?	?
Breaker (Open)			(1)
Breaker (Closed)			(1)
Breaker (Bad Status/Disabled)	?	?	?
Breaker racked-out (Open)			(1)
Breaker racked-out (Closed)			(1)
Breaker racked-out (Bad Status)	?	?	?
Breaker racked-in (Open)			(1)
Breaker racked-in (Closed)			(1)
Breaker racked-in (Bad Status)	?	?	?

(1) Red/Green color scheme for closed/open is configurable by the user.
(2) 3-position disconnect switches can be represented by grouping two 2-position disconnects switches.

To add a breaker or disconnect component, click it in the toolbox, then click in the window. Up to 10 dynamic components can be added to each single-line diagram.

Breaker and disconnect components have three different parts: label, symbol, and flags. Drag each of its parts to their final locations. Double or right-click any of these parts to open the properties window. Properties that can be edited are label text, breaker control element or disconnect switch element number, symbol orientation (horizontal or vertical), color scheme (red - closed, or red - open), and assigned side button (if any). If the selected breaker or disconnect element does not exist in the target relay or has not been enabled, then the component is displayed in the graphical front panel and in the drawing edit window in grey. The color scheme selection has no effect when an IEC style symbol is used because IEC style symbols do not use color.

Symbol orientation

The figure shows the orientation available for the breaker and disconnect switch (taking Open status as examples). The default position is 0 degrees.

Figure 4-34: Single-line diagram symbol orientation

		0 degree	90 degrees	180 degrees	270 degrees
IEEE Style	Disconnect Switch (Open)				
	Breaker (Open)				
IEC Style	Disconnect Switch (Open)				
	Breaker (Open)				
GE Style	Disconnect Switch (Open)				
	Breaker (Open)				

A question mark displays in a symbol on the graphical front panel when status is bad. The question mark does not rotate with orientation.

Figure 4-35: Symbols when status is bad

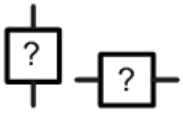

The following figures show the orientation available for the static components. The default position is 0 degrees.

Figure 4-36: Single-line diagram static symbol orientation (sheet 1 of 2)

	0 degree	90 degrees	180 degrees	270 degrees
3W Transformer	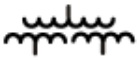			
2W Transformer			0 degree	90 degrees
3W Transformer				
2W Transformer			0 degree	90 degrees
Rotating machines		0 degree	0 degree	0 degree
Reactor			0 degree	90 degrees
Reactor				
Capacitor				
Capacitor			0 degree	90 degrees

Figure 4-37: Single-line diagram static symbol orientation (sheet 2 of 2)

	0 degree	90 degrees	180 degrees	270 degrees
Ground				
Connector			0 degree	90 degrees
Bus			0 degree	90 degrees
Feeder				
Crossover			0 degree	90 degrees
CT				
CT				
VT / PT			0 degree	90 degrees
VT / PT			0 degree	90 degrees

User-programmable pushbuttons

User-programmable pushbuttons 1 to 8 are physical pushbuttons on the right side of the graphical front panel, numbering down the two columns.

Any remaining user-programmable pushbuttons are programmed among the 10 pushbuttons on the left and right sides of the screen display. They show dynamically and provide a means to perform the same control as the other pushbuttons.

Figure 4-38: Assigning pushbuttons to the display

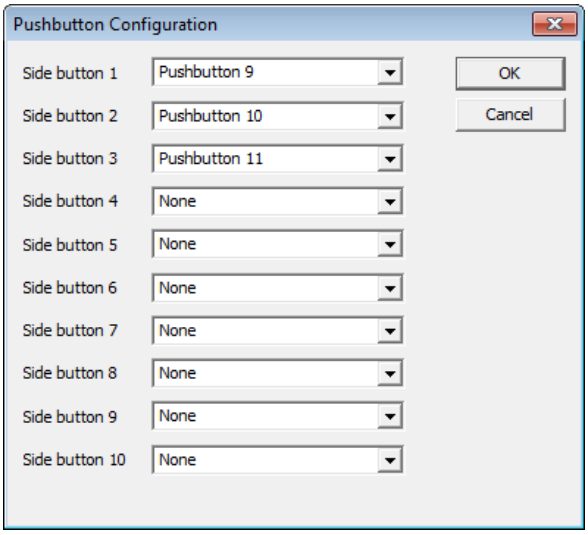

As an example, if you set up a single-line diagram with two breakers and six switches, then eight of the side pushbuttons are used automatically for control of the breakers and switches. Side pushbuttons 9 and 10 are available. In the single-line diagram, let us set side pushbutton 9 to clear event records as follows:

- Show side pushbutton 9 on the graphical front panel — Click the PB symbol in the toolbar, then set **Side button 9** to pushbutton 9 in the drop-down list. This pushbutton then displays when appropriate on the right side of the screen display.
- Program event record clearing — Set **Settings > Product Setup > Clear Relay Records > Clear Event Records** to FlexLogic operand PUSHBUTTON 9 ON
- Program pushbutton 9 — Set **Settings > Product Setup > User-Programmable Pushbuttons > Pushbutton 9 Function** to "Self-reset." When pressed, pushbutton 9 clears the event records.

To instead set the second user pushbutton (not a side pushbutton) to clear events, follow the second and third bullet points, selecting settings of PUSHBUTTON 2 ON and Pushbutton 2.

Metering components

Metering components show dynamically the value of a FlexAnalog operand or actual value. Up to 16 metering components can be added to each single-line diagram.

To add a metering component, click the M symbol in the toolbox, then click in the window. Drag it to its final location. Double-click it to open the properties window. The figure shows the properties that can be edited.

Figure 4-39: Metering properties

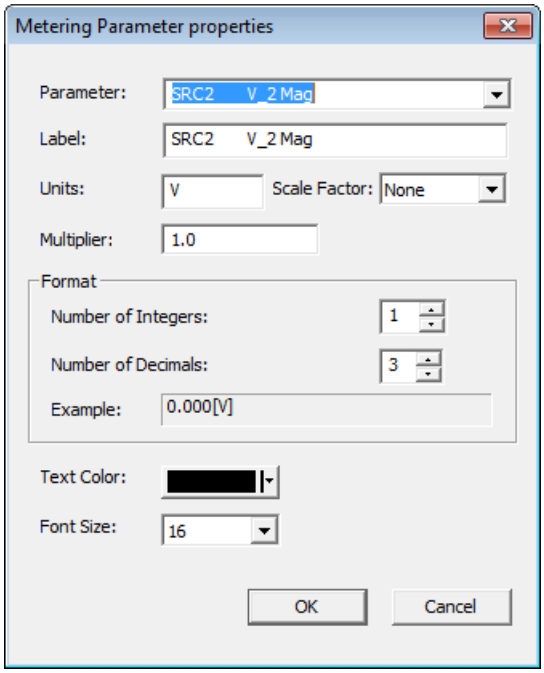

Status components

Status components show dynamically the value of a FlexLogic operand. Up to 16 can be used in a diagram and 30 in all single-line diagrams.

An example is to show the Off or On state of the ANY MAJOR ERROR FlexLogic operand. The name of the operand displays in the single-line diagram editor, then as Off or On on the graphical front panel.

To add a status component, click the S symbol in the toolbox, then click in the window. Drag it to its final location. Double-click it to open the properties window. Properties that can be edited include parameter (any FlexLogic operand), text color background color, and on and off text.

Optionally add a text label to display beside the status.

Text

Text components show a single line of user-configured text.

Up to 16 text components can be used per single-line diagram.

To add a text component, click the T symbol in the toolbox, then click in the window. Drag it to its final location. Double-click it to open the properties window. Properties that can be edited are text, color, and size.

Annunciator

An annunciator is a grid of small windows for alarms, actual values, self-test messages, and product information.

The graphical front panel emulates a conventional annunciator panel. The annunciator has 96 windows, each with a description of the alarm condition that lights the window. The windows are arranged in rows and columns of 3 x 4, 4 x 6, or 6 x 8 over several pages. Each window can have up to three lines of configurable text, and one line can instead be a metered value. Normally the window background is dark, and when the configured FlexLogic operand becomes On, the window lights up.

The figure shows that two alarms are active. One alarm is configured red and the other alarm is configured blue. The red alarm type is Self Reset, so the alarm displays in a solid color. The blue alarm type is Acknowledgeable, so the alarm flashes until it is acknowledged, for example by navigating with the arrow keys and pressing the **ENTER** button. The alarm then remains blue until the trigger condition is eliminated.

Figure 4-40: 3x4 annunciator page with two active windows

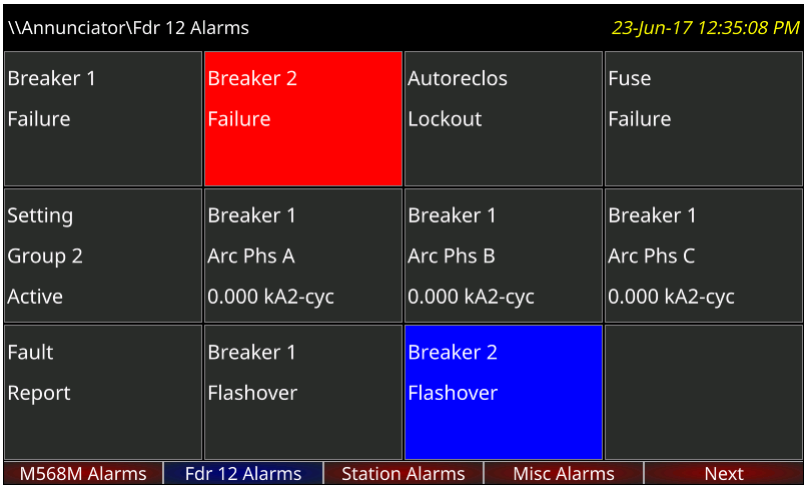

To display the annunciator, press the **Home** pushbutton, then the **Annunciator** Tab pushbutton. If there is one or more window in alarm or requiring reset, the annunciator page showing the first of these opens. Otherwise the first annunciator page opens.

Alarms do not display automatically. Set the Home page and/or rolling pages to display annunciator pages.

The Tab pushbutton labels populate with the annunciator pages. The label text for each annunciator page is configurable and displays in the header and Tab label. The current page has a blue Tab label. Tab labels for annunciator pages that have an active window (that is, on, latched, or unacknowledged) are red. Pages where alarms are not triggered have a grey Tab label. Pages that have no configured windows do not have Tab pushbuttons and do not display.

The Up, Down, Left, and Right pushbuttons cause the selection to move one window in the indicated direction. Pressing the Right pushbutton past the last window in a row scrolls the display to any next annunciator page, not the next row. The behavior is similar for the other pushbuttons, for example pressing the Up pushbutton while in the top row goes to any previous page. If no previous page exists, no action occurs.

Annunciator windows are positioned statically, so that all windows are visible no matter their state.

Alarm types of each window can be configured as Self Reset, Latched, or Acknowledgeable. In Self Reset mode, the window lighting follows the state of the configured FlexLogic operand. The self-reset mode alarm sequence conforms to ISA-18.1-1979 (R2004) standard type A 4 5 6.

Figure 4-41: Annunciator alarm sequence in Self Reset mode

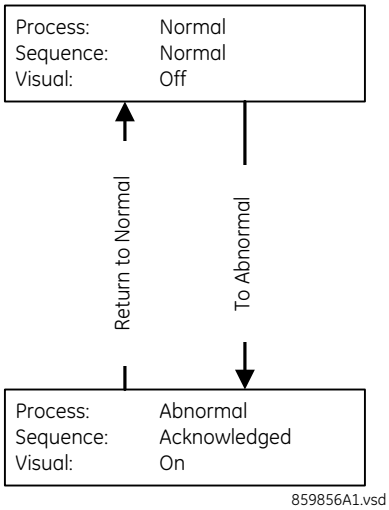

Latched mode is intended for transient signals such as trip, and it conforms to ISA-18.1-1979 (R2004) standard type M 6.

Figure 4-42: Annunciator alarm sequence in Latched mode

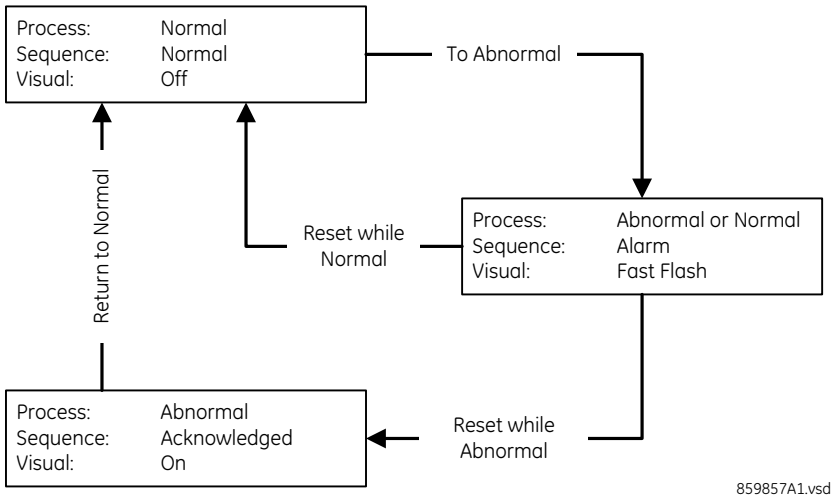

In Acknowledgeable mode, both Off to On and On to Off state changes in the configured operand cause the background to flash; the window must be acknowledged/reset to cancel flashing. This mode conforms to ISA-18.1-1979 (R2004) standard type R-6.

Figure 4-43: Annunciator alarm sequence in Acknowledgeable mode

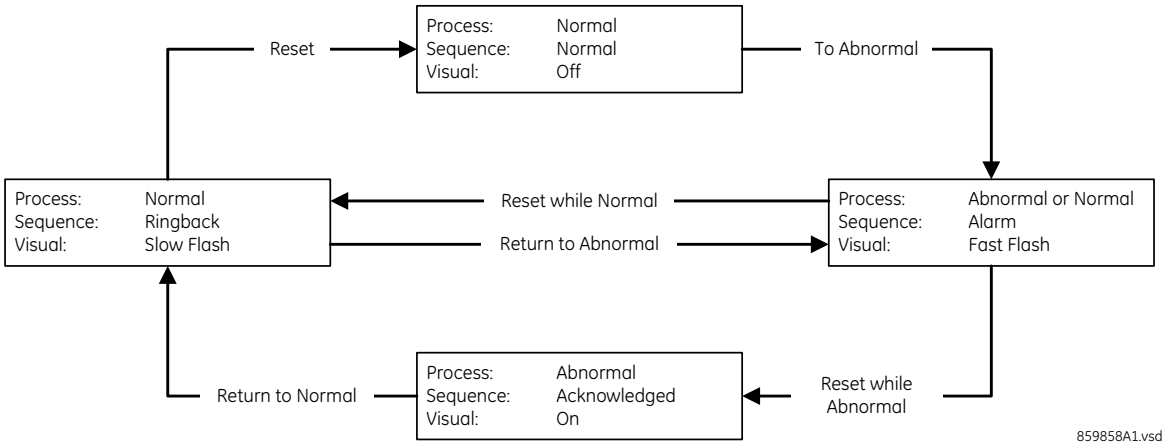

To reset all annunciator windows:

1. In the software, access **Actual Values > Graphical Panel > Annunciator Panel**.

To acknowledge/reset all annunciator windows on a page:

1. On the graphical front panel with none of the annunciator windows selected, press the **RESET** pushbutton once for acknowledgement and twice for reset. The flashing stops.

To acknowledge an annunciator window:

1. On the graphical front panel, press the Up, Down, Left, and Right pushbuttons to select the window, so that is has a yellow outline. Press the **RESET** or **ENTER** pushbutton. While a window is selected, if that window has activated since the last restart, the date/time of the last activation of that window displays in the header.

An alarm remains in an alarm state (for example, displays red) when the condition remains. That is, if you acknowledged a flashing alarm but the alarm condition remains, the background color remains red.

The **SETTINGS > INPUTS/OUTPUTS > RESETTING > RESET ANNUNCIATOR** setting can be used to select a FlexLogic operand that when activated acknowledges/resets all annunciator windows.

Annunciator editor

The annunciator editor is used to configure alarms and actual value displays for the graphical front panel.

The path in the EnerVista software is **Settings > Product Setup > Graphical Panel > Annunciator Editor**.

The figure shows the annunciator editor and its preview window. The page name is entered as General at the top right. Acknowledgeable and self-resetting alarms are set for basic functions, such as online/offline, Ethernet ports, unauthorized access/failed logins, and battery failure. The text to display in the annunciator window is entered. The IN SERVICE LED is set to be green because when the device is on, this LED is green. The preview shows what the annunciator looks like with all alarms triggered. The last window is not configured and displays blank/grey. In order for the Ethernet and battery alarms to work, the corresponding self-test alarms have been enabled under **Settings > Product Setup > User-Programmable Self Tests** (not shown). The LEDs can be viewed on the front panel, so adding them to the annunciator is for illustrative purposes only.

Figure 4-44: Annunciator editor and preview window

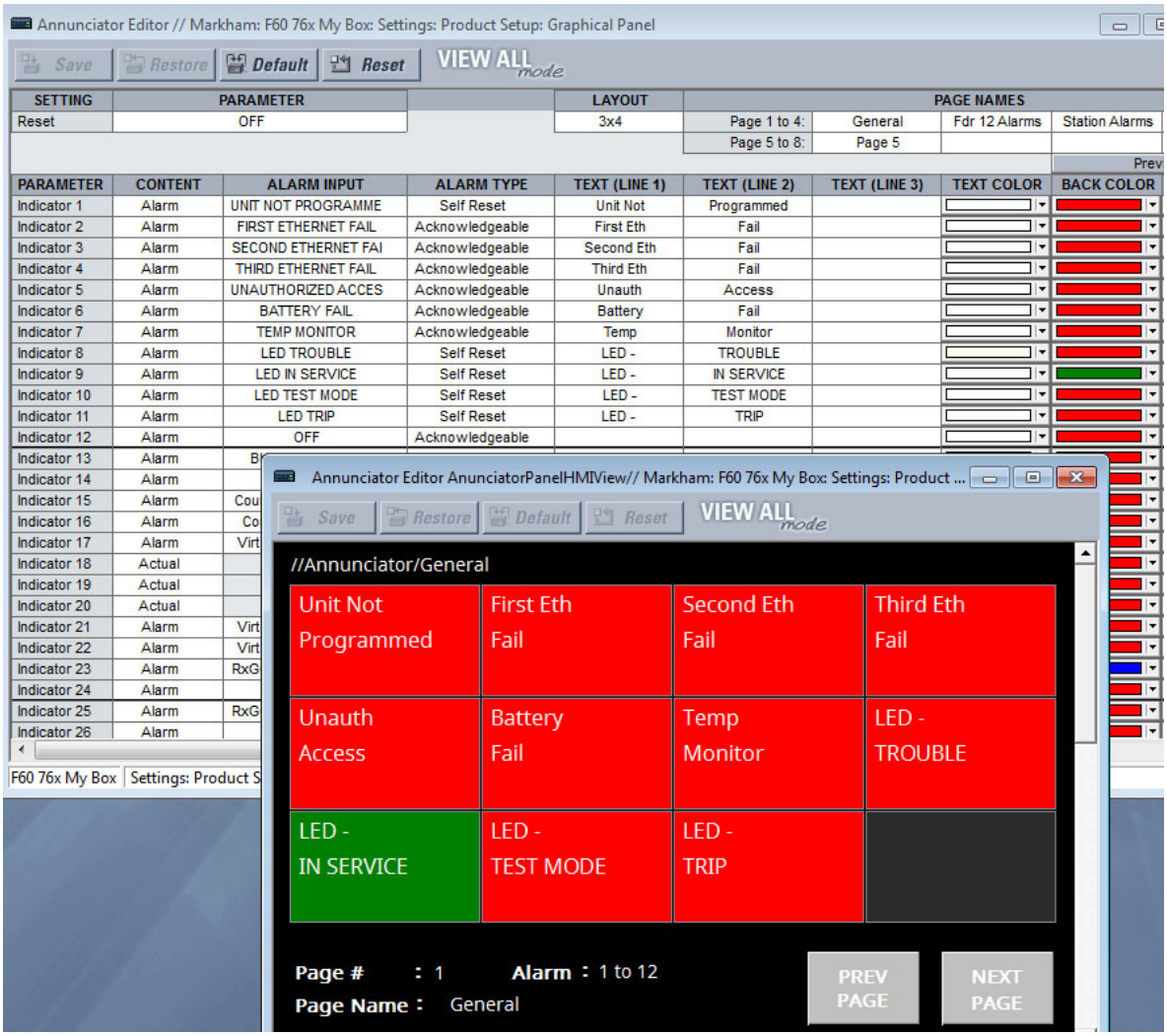

The three page layouts (3 × 4, 4 × 6, and 6 × 8) select the number of rows x columns of windows that appear in a page. Annunciator window size and text size shrink as the number of annunciator windows in a page increases.

Properties that can be edited include alarm type (acknowledgeable, latched, self-reset), alarm input (any FlexLogic operand), text color, and alarm background color.

The following buttons display at the top of the window:

- **Save** — Updates the connected device if online or the open setting file if offline with changes made
- **Restore** — Undoes changes that have not been saved
- **Default** — Changes all annunciator settings to their factory default values
- **Reset** — Displays factory default values. Previous settings are not lost unless you save the reset window.

Metering editor

The metering editor is an actual values display tool. It creates pages of actual values for the graphical front panel. There are two types: tables and phasor diagrams. Tabular actual values pages have settings to configure, while phasor actual values pages have no settings. Five tabular metering pages can be configured, while there can be a phasor page for each configured AC source. They display on the graphical front panel using the **Metering** Tab pushbutton.

The path to the editor is **Settings > Product Setup > Graphical Panel > Metering Editor**.

Figure 4-45: Metering editor with preview window

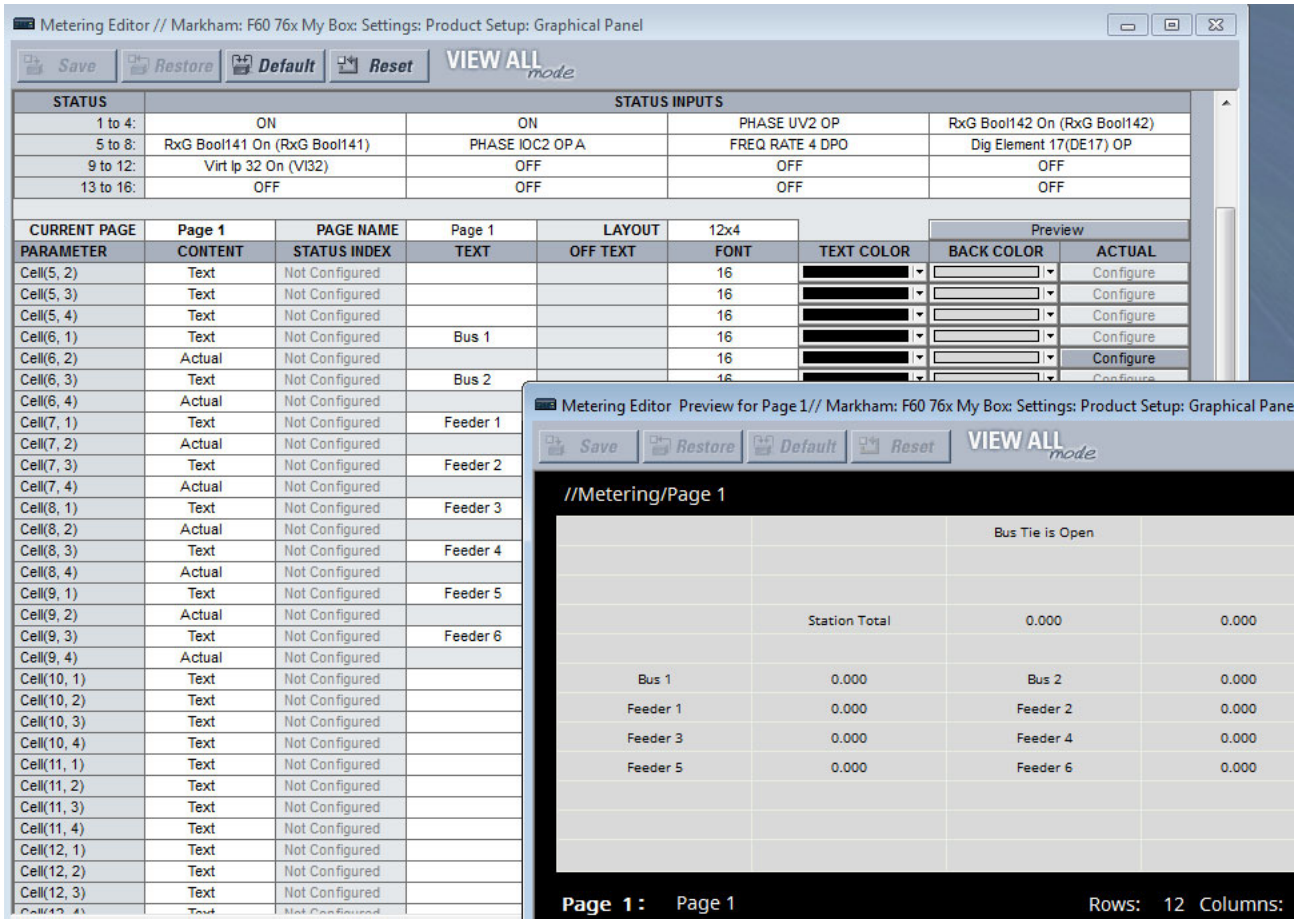

The inputs are selected at the top. Select from the drop-down list or start typing in the field.

The page, page name, and grid layout are set below the inputs.

Content to display is configured with the cell lines. The content can be actual values, a status indicator, or text.

- Actual value — Select from the FlexAnalogs applicable to the C70, where a FlexAnalog is an analog parameter
- Status — Select from the FlexLogic operands identified in the Status Inputs at the top of the window. An example is to display text to indicate whether the BATTERY FAIL operand is on or off.
- Text — Enter text to display in the table, for example name of table or column heading

If the metering input is other than OFF, the value of the selected metering input displays, formatted according to the size, text color, units, multiplier, and decimal configuration. Otherwise either the Text or the Off Text displays depending on the value of the operand selected by setting Status Input/Index.

A maximum of eight Status Inputs/Indexes can be used per metering page and 16 in all metering pages.

The following buttons display at the top of the window:

- **Save** — Updates the connected device if online or the open setting file if offline with changes made
- **Restore** — Undoes changes that have not been saved
- **Default** — Changes all actual value settings to their factory default values
- **Reset** — Displays factory default values. Previous settings are not lost unless you save the reset window.

Configurable navigation editor

Configurable Navigation is a feature that opens specified pages when specific FlexLogic operands are activated. This feature is useful to open the annunciator page containing an annunciator window that has entered its abnormal state.

In the example shown, failure of any of the three Ethernet ports triggers the Product Information page to display. With unauthorized access (such as wrong password), IRIG-B clock failure, or breaker trouble, the Event Records display. When a breaker opens, a single-line diagram displays. For the Ethernet and IRIG-B failure pages to work, these functions also have been enabled under **Settings > Product Setup > User-Programmable Self Tests**. For the breaker trouble, the single-line diagram has been configured.

Figure 4-46: Navigation editor

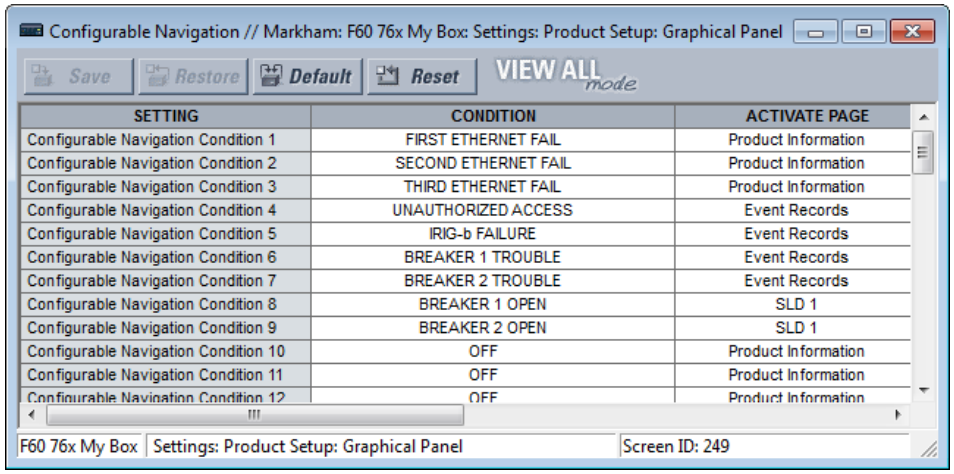

SETTING	CONDITION	ACTIVATE PAGE
Configurable Navigation Condition 1	FIRST ETHERNET FAIL	Product Information
Configurable Navigation Condition 2	SECOND ETHERNET FAIL	Product Information
Configurable Navigation Condition 3	THIRD ETHERNET FAIL	Product Information
Configurable Navigation Condition 4	UNAUTHORIZED ACCESS	Event Records
Configurable Navigation Condition 5	IRIG-b FAILURE	Event Records
Configurable Navigation Condition 6	BREAKER 1 TROUBLE	Event Records
Configurable Navigation Condition 7	BREAKER 2 TROUBLE	Event Records
Configurable Navigation Condition 8	BREAKER 1 OPEN	SLD 1
Configurable Navigation Condition 9	BREAKER 2 OPEN	SLD 1
Configurable Navigation Condition 10	OFF	Product Information
Configurable Navigation Condition 11	OFF	Product Information
Configurable Navigation Condition 12	OFF	Product Information

The path is **Settings > Product Setup > Graphical Panel > Configurable Navigation**.

The settings consist of 64 field pairs, each with a condition and an activation page. The condition selects any FlexLogic operand. The activation page selection is the standard set, such as product information, event records, annunciator pages, and single-line diagrams.

To use the feature, select a **CONDITION**, select its **ACTIVATE PAGE** option, then save. When selecting the condition operand, open the drop-down list and start typing in the field to auto-fill. For example, typing F displays FIRST ETHERNET FAIL.

The following buttons display at the top of the window:

- **Save** — Updates the connected device if online or the open setting file if offline with changes made
- **Restore** — Undoes changes that have not been saved

- **Default** — Changes all settings in the window to factory default values
- **Reset** — Displays factory default values. Previous settings are not lost unless you save the reset window.

4.2.3 Front panel navigation keys

4.2.3.1 Enhanced and basic front panels

Display messages are organized into pages under the following headings: actual values, settings, commands, and targets. The **MENU** key navigates through these pages. Each heading page is divided further into further submenus.

The **MESSAGE** keys navigate through the submenus. The **VALUE** keys increment or decrement numerical setting values when in programming mode. These keys also scroll through alphanumeric values in the text edit mode. Alternatively, values can be entered with the numeric keypad.

The decimal key initiates and advances to the next character in text edit mode or enters a decimal point.

The **HELP** key can be pressed at any time for context-sensitive help messages.

The **ENTER** key stores setting values.

4

When entering an IP address on the front panel, key in the first sequence of the number, then press the • key for the decimal place. For example, for 127.0.0.1, press 127, then •, then 0, then •, then 0, then •, then 1. To save the address, press the **ENTER** key.

When entering or changing an order code with two lines, press the down arrow to access the second line. On a basic front panel, do this under **ACTUAL VALUES ⇨⇩ PRODUCT INFO ⇨ MODEL INFORMATION**.

The figure shows the sequence to use to enter a setting. Subsequent sections provide more detail.

Figure 4-47: Front panel keypad use (basic front panel shown)

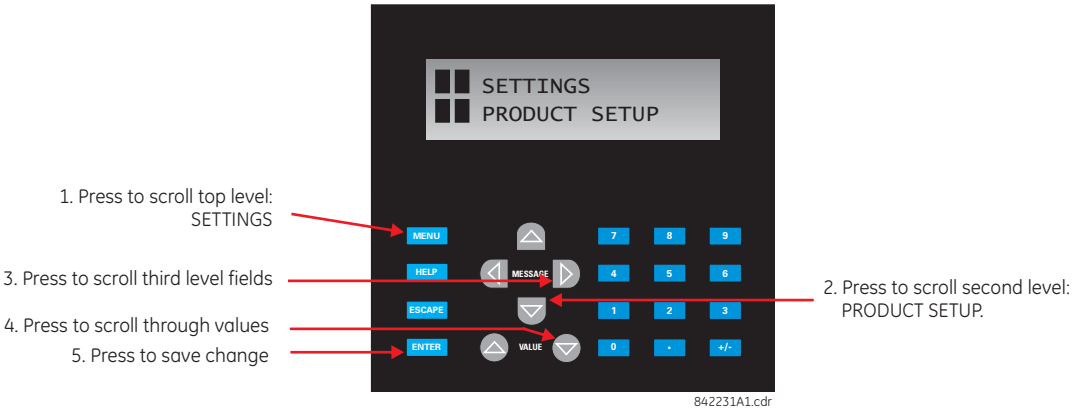

4.2.3.2 Graphical front panel

These keys and pushbuttons navigate and select items.

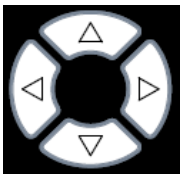

Up/Down/Left/Right — These pushbuttons move the selector among the options on a page. The selection is indicated by a yellow background or a yellow border. On menu pages, the Right pushbutton activates the selected submenu drilling down the menu hierarchy, and the Left pushbutton backs up the menu hierarchy. These pushbuttons have a typematic feature on some pages: after a short pause, the pushbutton repeats as long as it is pressed.

ENTER — Activates the selection on the display, for example a submenu, a control, a keypad key, or a setting. Also stores updated settings.

ESCAPE — If a setting is open for edit, this pushbutton closes the setting without saving. If an item is selected, this pushbutton deselects it. Otherwise this pushbutton activates the previous page in the page hierarchy.

RESET — Clears all latched LED indications and target messages. When a page with acknowledgeable/resettable items is displayed, it instead resets/acknowledges all items on that page, or if an item on that page is selected, it resets/acknowledges that item.
If you reset/acknowledge alarms, they stop flashing but remain in the alarm state as long as that state remains. In other words, a red alarm does not switch off just because you acknowledged the alarm.

Home — Activates the home page, which is the root page. The page displays product information by default and is configurable.

Side pushbutton — Five pushbuttons on the left side of the display and five pushbuttons on the right side of the display. They perform various functions depending on the displayed page, such as switchgear controls. The display dynamically shows its label next to each side pushbuttons when the pushbutton has an assigned function. These pushbuttons can also be programmed to function as user-programmable pushbuttons 9 and higher.

Tab pushbutton — Five pushbuttons under the display. They navigate through the page hierarchy, and on some pages activate other actions. The display footer dynamically labels the page or action that is activated by the Tab pushbutton.

User-programmable pushbutton — Eight physical pushbuttons are associated with the first eight user-programmable pushbutton elements. Numbering is down, that is, 1 to 4 down the left column and 5 to 8 down the right column.
These elements control a set of FlexLogic operands that can be used to initiate outputs or select modes. Each physical pushbutton has an integrated LED indicator that can be user-configured to display the appropriate status.
These pushbuttons have clear covers behind which custom labels can be mounted. A utility is available to print the labels, under **File > Front Panel Report** in the software.

4.2.4 LED indicators

4.2.4.1 Enhanced front panel

The enhanced front panel display provides five columns of LED indicators. The first column contains 14 status and event-cause LEDs. The next four columns contain the 48 user-programmable LEDs.

The **RESET** key is used to reset any latched LED indicator or target message, once the condition has been cleared (these latched conditions can also be reset via the **SETTINGS** ⇨⇩ **INPUT/OUTPUTS** ⇨⇩ **RESETTING** menu).

The **USER** keys are used by the breaker control feature.

Figure 4-48: Typical LED panel for enhanced front pane

842811A1.CDR

The status indicators in the first column are as follows:

- **IN SERVICE** — Indicates that control power is applied, all monitored inputs/outputs and internal systems are fine, and the relay is in (online) Programmed mode (under **Settings > Product Setup > Installation**)
- **TROUBLE** — Indicates that the relay has detected an internal problem. Check the self-test messages outlined at the end of the Commands and Targets chapter, and view the event records under **Actual Values > Records**. For a beta / pre-release, this LED is always on.
- **TEST MODE** — Indicates that the relay is in test mode. For information, see the Testing section in the Settings chapter.
- **TRIP** — Indicates that the selected FlexLogic operand serving as a trip input has operated. Set the operand under **Settings > Product Setup > User-Programmable LEDs > Trip & Alarm LEDs**. This indicator latches; initiate the reset command to reset the latch.
- **ALARM** — Indicates that the FlexLogic operand serving as an alarm switch has operated. Set the operand under **Settings > Product Setup > User-Programmable LEDs > Trip & Alarm LEDs**. This indicator never latches.
- **PICKUP** — Indicates that an element is picked up. This indicator never latches.

The event-cause indicators in the first column are as follows.

Event-cause LEDs are below the status LEDs. They are turned on or off by protection elements that have their respective target setting selected as either "Enabled" or "Latched." If a protection element target setting is "Enabled," then the corresponding event-cause LEDs remain on as long as the operand associated with the element remains asserted. If a protection element target setting is "Latched," then the corresponding event-cause LEDs turn on when the operate operand associated with the element is asserted and remains on until the **RESET** button on the front panel is pressed after the operand is reset.

All elements that are able to discriminate faulted phases can independently turn off or on the phase A, B, or C LEDs. This includes phase instantaneous overcurrent, phase undervoltage, and so on. This means that the phase A, B, and C operate operands for individual protection elements are ORed to turn on or off the phase A, B, or C LEDs.

- **VOLTAGE** — This LED indicates voltage was involved
- **CURRENT** — This LED indicates current was involved
- **FREQUENCY** — This LED indicates frequency was involved
- **OTHER** — This LED indicates a composite function that is not solely current, voltage, or frequency based (distance or power for example) or a control function (digital element or trip bus for example)
- **PHASE A** — This LED indicates phase A was involved
- **PHASE B** — This LED indicates phase B was involved
- **PHASE C** — This LED indicates phase C was involved
- **NEUTRAL/GROUND** — This LED indicates that neutral or ground was involved

The user-programmable LEDs consist of 48 amber LED indicators in four columns. The operation of these LEDs is user-defined. Support for applying a customized label beside every LED is provided. Default labels are shipped in the label package of every C70, together with custom templates. The default labels can be replaced by user-printed labels.

User customization of LED operation is of maximum benefit in installations where languages other than English are used to communicate with operators. See the User-Programmable LEDs section in chapter 5 for the settings used to program the operation of the LEDs on these panels.

4.2.4.2 Basic front panel

The basic front panel consists of three panels with LED indicators, keys, and a communications port. The **RESET** key is used to reset any latched LED indicator or target message, once the condition has been cleared (these latched conditions can also be reset via the **SETTINGS** ⇨⇩ **INPUT/OUTPUTS** ⇨⇩ **RESETTING** menu). The RS232 port is for connection to a computer.

The **USER** keys are used by the breaker control feature.

Figure 4-49: LED panel 1

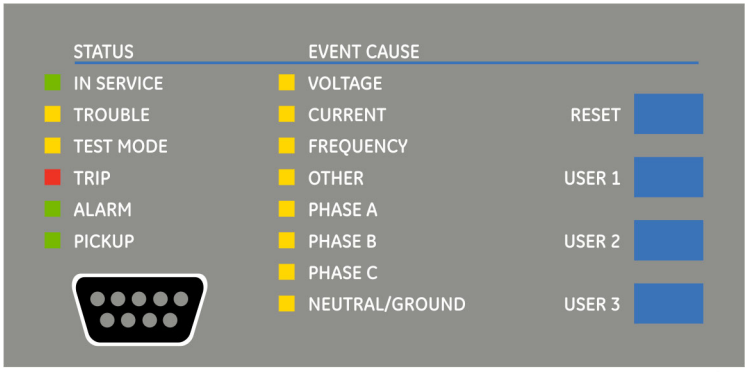

842781A1.CDR

Status indicators

- **IN SERVICE** — Indicates that control power is applied, all monitored inputs/outputs and internal systems are fine, and the relay is in (online) Programmed mode (under **Settings > Product Setup > Installation**)
- **TROUBLE** — Indicates that the relay has detected an internal problem. Check the self-test messages outlined at the end of the Commands and Targets chapter, and view the event records under **Actual Values > Records**. For a beta / pre-release, this LED is always on.
- **TEST MODE** — Indicates that the relay is in test mode. For information, see the Testing section in the Settings chapter.
- **TRIP** — Indicates that the selected FlexLogic operand serving as a trip switch has operated. This indicator always latches; initiate the reset command to reset the latch.
- **ALARM** — Indicates that the selected FlexLogic operand serving as an alarm switch has operated. This indicator never latches.
- **PICKUP** — Indicates that an element is picked up. This indicator never latches.

Event-cause indicators

Event-cause LEDs are turned on or off by protection elements that have their respective target setting selected as either "Enabled" or "Latched." If a protection element target setting is "Enabled," then the corresponding event cause LEDs remain on as long as the operand associated with the element remains asserted. If a protection element target setting is "Latched," then the corresponding event cause LEDs turn on when the operate operand associated with the element is asserted and remains on until the **RESET** button on the front panel is pressed after the operand is reset.

All elements that are able to discriminate faulted phases can independently turn off or on the phase A, B, or C LEDs. This includes phase instantaneous overcurrent, phase undervoltage, and so on. This means that the phase A, B, and C operate operands for individual protection elements are ORed to turn on or off the phase A, B, or C LEDs.

- **VOLTAGE** — Indicates voltage was involved
- **CURRENT** — Indicates current was involved
- **FREQUENCY** — Indicates frequency was involved
- **OTHER** — Indicates a composite function that is not solely current, voltage, or frequency based (distance or power for example) or a control function (digital element or trip bus for example)
- **PHASE A** — Indicates phase A was involved
- **PHASE B** — Indicates phase B was involved
- **PHASE C** — Indicates phase C was involved
- **NEUTRAL/GROUND** — Indicates that neutral or ground was involved

User-programmable indicators

The second and third panels provide 48 amber LED indicators whose operation is controlled by the user. Custom labelling can be done.

User customization of LED operation is of maximum benefit in installations where languages other than English are used to communicate with operators. See the User-programmable LEDs section in chapter 5 for the settings used to program the operation of the LEDs on these panels.

Figure 4-50: LED panels 2 and 3 (index template)

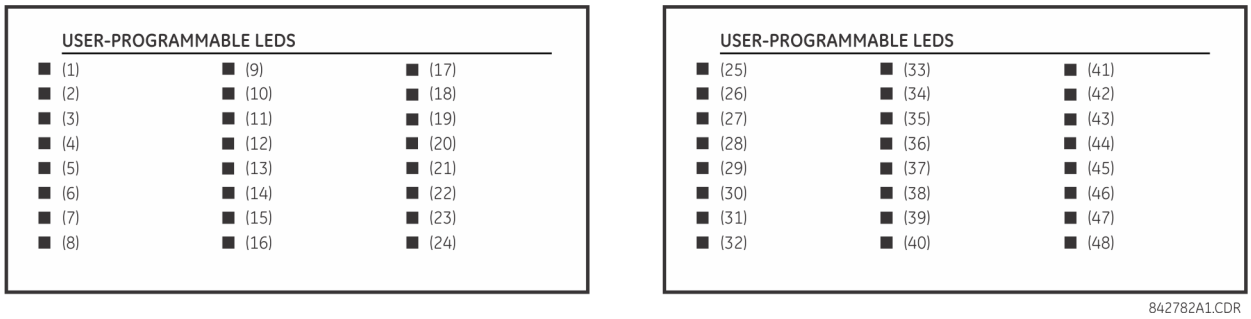

Default labels for LED panel 2

The default labels are intended to represent the following:

- **GROUP 1...6** — The illuminated GROUP is the active settings group

The relay is shipped with the default label for the LED panel 2. The LEDs, however, are not pre-programmed. To match the pre-printed label, the LED settings must be entered as shown in the User-programmable LEDs section of chapter 5. The LEDs are fully user-programmable. The default labels can be replaced by user-printed labels for both panels as explained in the next section.

Figure 4-51: LED panel 2 (default labels)

4.2.4.3 Graphical front panel

The graphical front panel has 14 LEDs. LEDs 1 to 5 are fixed status LEDs, and LEDs 6 to 14 are programmable.

Status indicators

- **IN SERVICE** — Indicates that control power is applied, all monitored inputs/outputs and internal systems are fine, the relay's test mode is disabled, and the relay is in (online) Programmed mode (under **Settings > Product Setup > Installation**)
- **TROUBLE** — Indicates that the relay has detected an internal problem. Check the self-test messages outlined at the end of the Commands and Targets chapter, and view the event records under **Actual Values > Records**. For a beta / pre-release, this LED is always on.
- **TEST MODE** — Indicates that the relay is in Test-Blocked (solid) or Test (flashing) mode. For information, see the Testing section in the Settings chapter.

- **TRIP** — Indicates that the selected FlexLogic operand serving as a trip input has operated. Set the operand under **Settings > Product Setup > User-Programmable LEDs > Trip & Alarm LEDs**. This indicator latches; initiate the reset command to reset the latch.
- **ALARM** — Indicates that the selected FlexLogic operand serving as an alarm input has operated. Set the operand under **Settings > Product Setup > User-Programmable LEDs > Trip & Alarm LEDs**.

Figure 4-52: Example of LEDs on graphical front panel

4

User-programmable event-cause indicators

Event-cause LEDs are below the status LEDs. They are turned on or off by protection elements that have their respective target setting selected as "Self-Reset" or "Latched." If set to "Self-Reset," then the corresponding event cause LED remains on as long as the operand associated with the element remains asserted. If set to "Latched" and asserted, then it remains on until the operand is reset and then a reset command initiated.

All elements that are able to discriminate faulted phases can independently turn on or off the phase A, B, or C LEDs. This includes phase instantaneous overcurrent, phase undervoltage, and so on. This means that the phase A, B, and C operate operands for individual protection elements are ORed to turn on or off the phase A, B, or C LEDs.

The LEDs have defaults and can be configured to show instead the status of any FlexLogic operand.

The labelling area has a clear cover for custom labels. A utility is available to print stick-on labels, as outlined later in this chapter.

These LEDs are programmed by default as follows:

- **PICKUP — LED 6** — Indicates that an element is picked up, and hence a trip can be imminent
- **VOLTAGE — LED 7** — Indicates voltage was involved
- **CURRENT — LED 8** — Indicates current was involved
- **FREQUENCY — LED 9** — Indicates frequency was involved
- **OTHER — LED 10** — Indicates a composite function that is not solely current, voltage, or frequency based (distance or power for example) or a control function (digital element or trip bus for example)
- **PHASE A — LED 11** — Indicates phase A was involved
- **PHASE B — LED 12** — Indicates phase B was involved
- **PHASE C — LED 13** — Indicates phase C was involved
- **NEUTRAL/GROUND — LED 14** — Indicates that neutral or ground was involved

4.2.5 Front panel labelling

4.2.5.1 Enhanced front panel

The following procedure requires these pre-requisites:

- The UR front panel label cutout sheet (GE part number 1006-0047) has been downloaded from http://www.gegridsolutions.com/products/support/ur/URLEDenhanced.doc and printed
- Small-bladed knife

To create custom LED and pushbuttons labels for the enhanced front panel:

1. Start the EnerVista UR Setup software.
2. If not already copied to the Offline Window area, right-click the online device and select the **Add Device to Offline Window** option. Click the **Receive** button in the window that opens to save the settings file to the Offline Window area.
3. Type labels as follows. Select the **File > Front Panel Report**. The window opens.

Figure 4-53: Enhanced front panel label designer

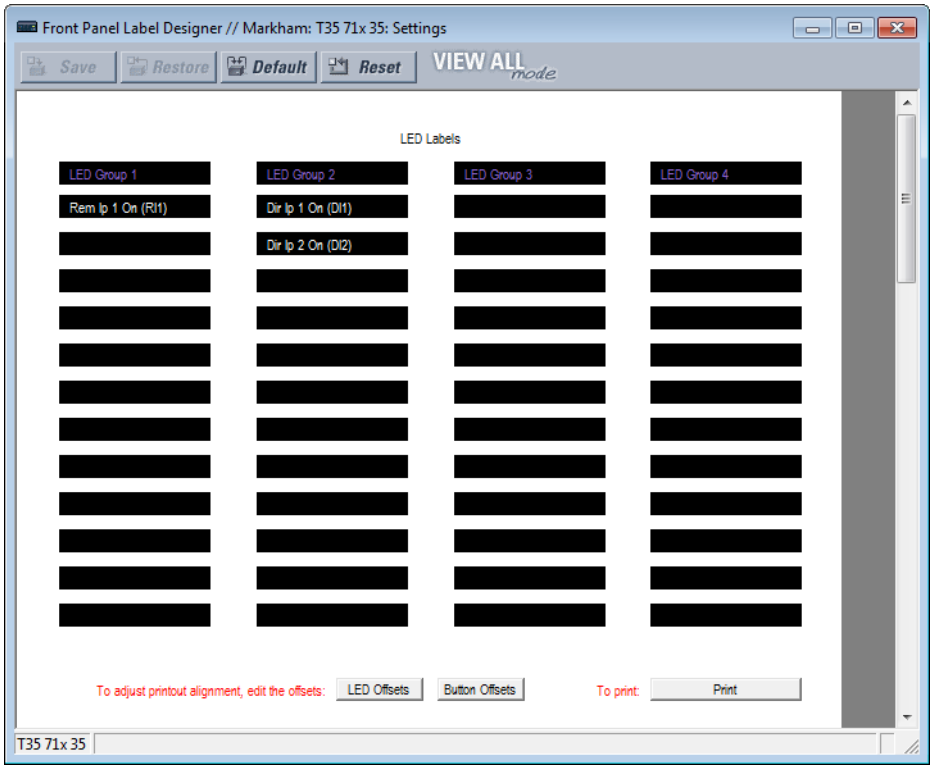

4. Enter the text to appear next to each LED and above each user-programmable pushbutton in the fields provided. The **LED Offsets** and **Button Offsets** buttons move all labels left/right and up/down on the page (they both do the same action, so use either button). The **Button Offsets** button does not display when there are no pushbuttons to customize.
5. Feed the UR front panel label cutout sheet into a printer and press the **Print** button in the front panel report window.
6. When printing is complete, fold the sheet along the perforated lines and punch out the labels.
7. Remove the UR label insert tool from the package and bend the tabs as described in the following procedures. These tabs are used for removal of the default and custom LED labels.

NOTE

Use the tool with the printed side containing the GE part number facing the user.

The label package shipped with every C70 contains the three default labels, the custom label template sheet, and the label removal tool.

If the default labels are suitable for your application, insert them in the appropriate slots and program the LEDs to match them. If you require custom labels, use the following procedures to remove the original labels and insert the new ones.

To set up and use the label removal tool:

1. Bend the tabs at the left end of the tool upwards as shown.

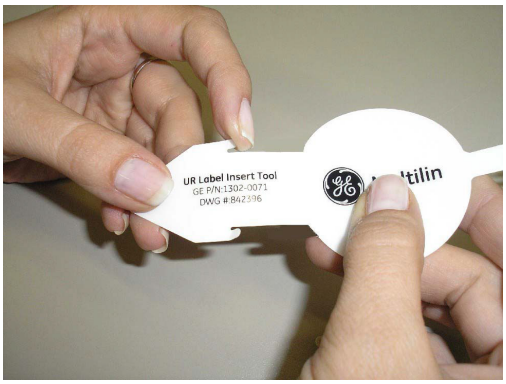

Bend the tab at the center of the tool tail as shown.

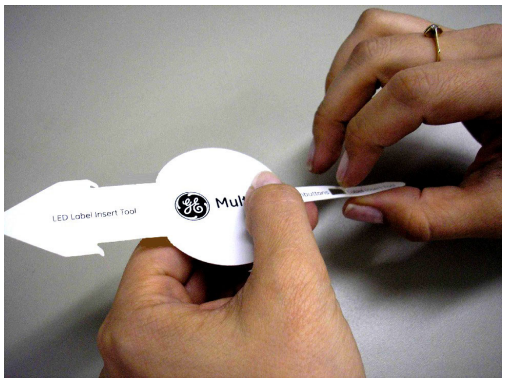

To remove the LED labels from the C70 front panel and insert the custom labels:

1. Use the knife to lift the LED label and slide the label tool underneath. Ensure that the bent tabs are pointing away from the relay.

2. Slide the label tool under the LED label until the tabs snap out as shown. This attaches the label tool to the LED label.

3. Remove the tool and attached LED label as shown.

4. Slide the new LED label inside the pocket until the text is properly aligned with the LEDs, as shown.

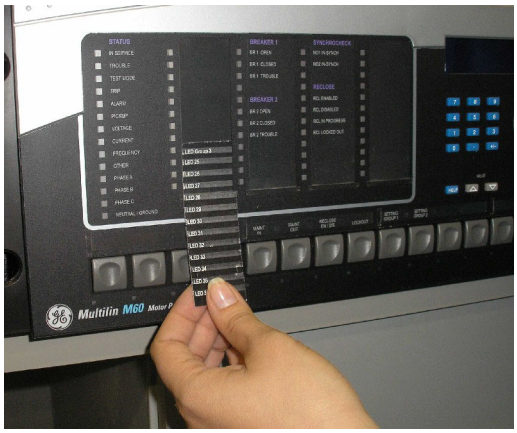

To remove the user-programmable pushbutton labels from the C70 front panel and insert the custom labels:

1. Use the knife to lift the pushbutton label and slide the tail of the label tool underneath, as shown. Ensure that the bent

tab points away from the relay.

2. Slide the label tool under the user-programmable pushbutton label until the tabs snap out as shown. This attaches the label tool to the user-programmable pushbutton label.

3. Remove the tool and attached user-programmable pushbutton label.

4. Slide the new user-programmable pushbutton label inside the pocket until the text is properly aligned with the

buttons.

4

4.2.5.2 Basic front panel

After programming LEDs and pushbuttons under **Settings > Product Setup > User-Programmable Leds** and **User-Programmable Pushbuttons**, labels can be created for the front panel.

To create LED and pushbutton labels for a basic front panel:

1. In the EnerVista software, if the C70 is not already listed in the Offline Window area, add it by right-clicking it and selecting the **Add Device to Offline Window** option.
2. Click the **File > Front Panel Report** menu item and select the device.
3. In the Front Panel Report window, double-click an LED or pushbutton slot and type a label. If you need to see the existing front panel remotely, access **Actual Values > Front Panel** for the online device. If you need to see the In the figure, note that labelling is being done for the third set of LEDs because the second panel of LEDs was factory-labelled.

Figure 4-54: Basic front panel label designer (LEDs shown)

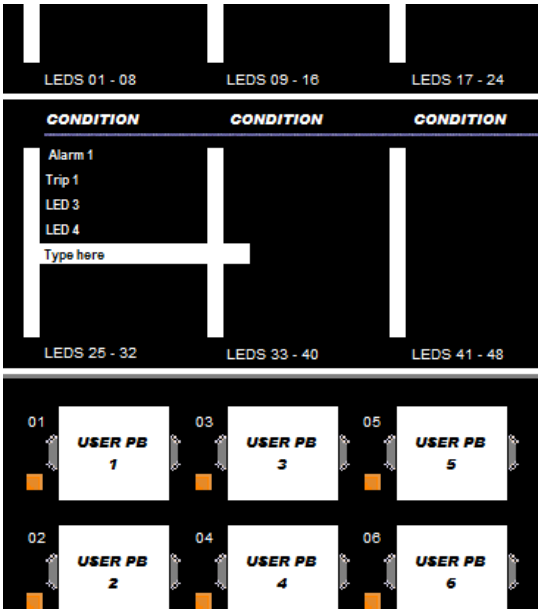

4. Optionally save the changes by clicking the **Save** icon on the toolbar.
5. Click the **Print** icon on the toolbar. Consider printing to PDF format and adjusting the zoom for appropriate label size, then print on a physical printer.
6. Cut labels as a block or individually, for example with scissors or an Exacto knife.
7. If there is a plastic cover over the front panel, remove it by gently pushing in on the right side and lifting off the cover.
8. Remove the plastic cover over the LEDs or pushbutton(s) using a screw driver.
9. Insert the labels.
10. Re-attach the plastic covers.

4.2.5.3 Graphical front panel

The C70 includes software for labelling the LEDs and pushbuttons on the graphical front panel and a sticker sheet with pre-printed and blank labels. The pre-printed labels are on the top-left of the template sheet, and the blank labels are on the bottom-right. Use the pre-printed labels, or use the designer provided in the software and print labels onto the template. One sheet is provided.

The example shows LED labeling, wjth pushbutton labeling below it (cut off).

To create LED and pushbutton labels for the front panel:

1. In the EnerVista software, in the Online or Offline Window area, access **Settings > Front Panel Label Designer** or **Front Panel Label Designer** (at the product root level). The designer window opens with pre-configured labels.
2. Under **File > Print Setup**, change the page orientation to **Landscape**.
3. In the label designer window, delete all labels not wanted for printing. This can be done by clicking the **Reset** button to clear all labels, or by selecting each unwanted label and deleting it. Otherwise, all labels displayed print on the template and use up the template. If you make a mistake, exit the window and open it again to view the default labels.
4. Based on the location on the template on which to print, create the labels by typing in the appropriate slots.

Figure 4-55: Front panel label designer for graphical front panel

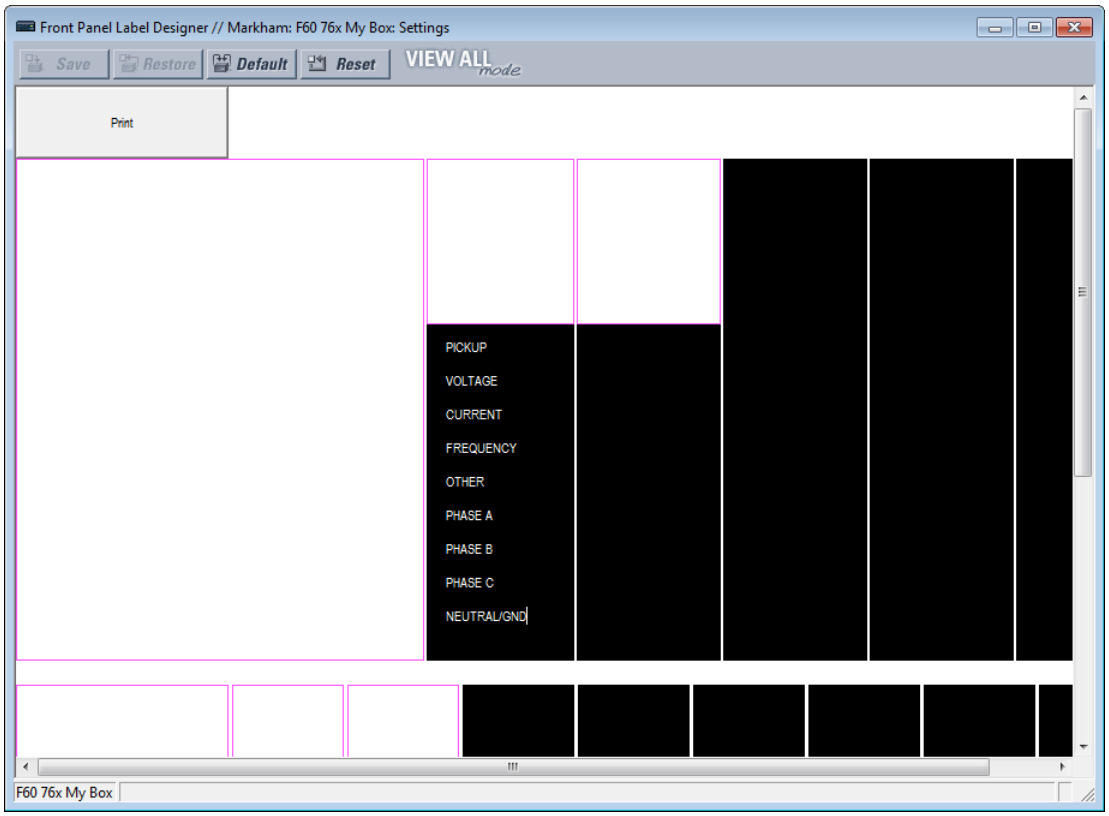

5. Click the **Print** button in the window and select the printer.
6. Once printed, peel the labels off the template and stick them on the front panel. For the enhanced and graphical front panels, they go over the clear plastic inserts, not under. For the basic front panel, they go under or over the plastic covers.

Any changes are not saved. Each time that the label designer window opens, the original template displays. Any labels deleted are not lost.

4.2.6 Menu navigation

Press the **MENU** key to display selections or home page. Each press of the key advances through the following main headings:

- Actual Values
- Settings
- Commands
- Targets
- Factory Service
- User displays (when enabled)

4.2.6.1 Enhanced and basic front panels

The setting and actual value pages are arranged hierarchically. Header display pages are indicated by double scroll bars (■■), while sub-header pages are indicated by a single scroll bar (■). The header display pages represent the highest level of the hierarchy and the sub-header display pages fall below this level. Use the down, right, left, and up arrows to navigate the menu. The **MESSAGE** up and down arrow keys move within a group of headers, sub-headers, setting values, or actual

values. Continually pressing the **MESSAGE** right arrow from a header display displays specific information for the category. Conversely, continually pressing the **MESSAGE** left arrow from a setting value or actual value display returns to the header display.

Default values are indicated in this instruction manual in mixed case. In the example shown here, the default access level is Restricted.

Highest level **Lowest level (setting value)**

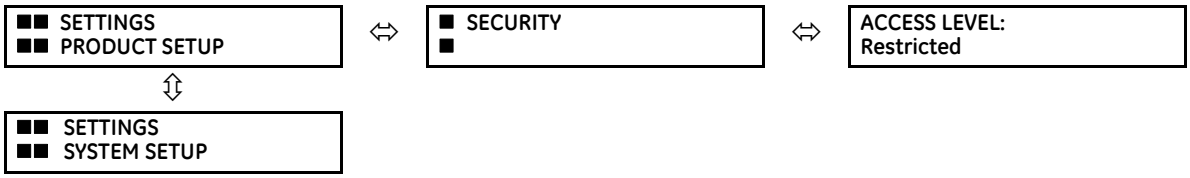

Example

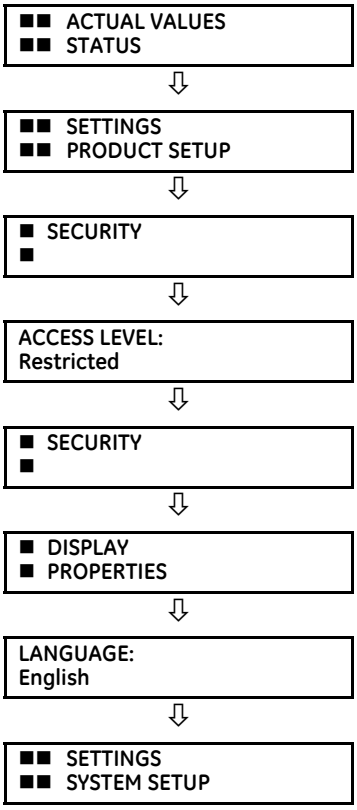

Press the **MENU** key until the Actual Values header page appears. This page contains system and relay status information.

Press the **MENU** key until the Settings header page appears. This category contains settings to configure the relay.

Press the **MESSAGE** right arrow once to display the first sub-header (Security).

Press the **MESSAGE** right arrow once to display the first setting for Security.

Press the **MESSAGE** left arrow to return to the Security heading.

Press the **MESSAGE** down arrow to display the second setting sub-header associated with the Product Setup header.

Press the **MESSAGE** right arrow once to display the first setting for Display Properties.

Press the **MESSAGE** left arrow to return to the Display Properties page, then again to return to the Product Setup Page. Press the **MESSAGE** down arrow to move to the next Settings page. This page contains settings for System Setup.

4.2.6.2 Graphical front panel

Access the main menu by pressing the **Home** pushbutton, then the **Menu** Tab pushbutton.

Use the Up and Down arrow pushbuttons to select a submenu, then press the Right or **ENTER** pushbutton to drill into that submenu. The Left and **ESCAPE** pushbuttons back up the menu hierarchy.

The **Page Up** and **Page Down** Tab pushbuttons also navigate through the list. When there is only a single page of options, they jump to the first and last entries.

The options displayed depend on order code.

Figure 4-56: Main menu on graphical front panel

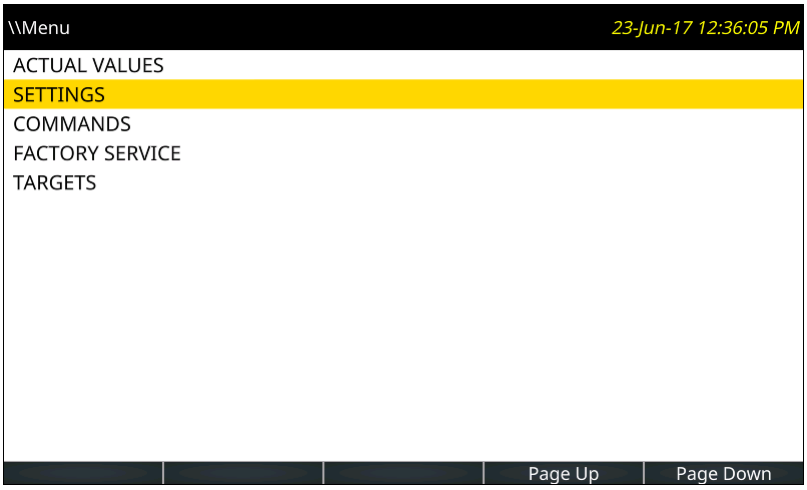

4

4.2.7 Change settings

4.2.7.1 Enhanced and basic front panels

Numerical data

Each numerical setting has its own minimum, maximum, and increment value associated with it. These parameters define what values are acceptable for a setting.

FLASH MESSAGE **TIME: 10.0 s**	For example, select the **SETTINGS** ⇨ **PRODUCT SETUP** ⇨⇩ **DISPLAY PROPERTIES** ⇨⇩ **FLASH MESSAGE TIME** setting.
⇩	
MINIMUM: 0.5 **MAXIMUM: 10.0**	Press the **HELP** key to view the minimum and maximum values. Press the key again to view the next context sensitive help message.

Two methods of editing and storing a numerical setting value are available.

- **0 to 9 and decimal point** — The relay numeric keypad works the same as a calculator. A number is entered one digit at a time. The leftmost digit is entered first and the rightmost digit is entered last. Pressing the **MESSAGE** left arrow or pressing the **ESCAPE** key, returns the original value to the display.
- **VALUE keys** — The **VALUE** up arrow increments the displayed value by the step value, up to the maximum value allowed. While at the maximum value, pressing the **VALUE** up arrow again allows the setting selection to continue upward from the minimum value. The **VALUE** down arrow decrements the displayed value by the step value, down to the minimum value. While at the minimum value, pressing the **VALUE** down arrow again allows the setting selection to continue downward from the maximum value.

FLASH MESSAGE **TIME: 2.5 s**	As an example, set the flash message time setting to 2.5 seconds. Press the appropriate numeric keys in the sequence "2 . 5". The display message changes as the digits are being entered.
⇩	
NEW SETTING **HAS BEEN STORED**	Until **ENTER** is pressed, editing changes are not registered by the relay. Press **ENTER** to store the new value in memory. This flash message momentarily appears as confirmation of the storing process. Numerical values that contain decimal places are rounded-off if more decimal place digits are entered than specified by the step value.

Enumeration data

Enumeration settings have data values that are part of a set, whose members are explicitly defined by a name. A set has two or more members.

ACCESS LEVEL: **Restricted**	For example, the selections available for **ACCESS LEVEL** are "Restricted," "Command," "Setting," and "Factory Service."

Enumeration type values are changed using the **VALUE** keys. The **VALUE** up arrow displays the next selection while the **VALUE** down arrow displays the previous selection.

ACCESS LEVEL: **Setting**	If the **ACCESS LEVEL** needs to be "Setting," press the **VALUE** keys until the proper selection displays. Press **HELP** at any time for the context sensitive help messages.
⇩	
NEW SETTING **HAS BEEN STORED**	Changes are not registered by the relay until the **ENTER** key is pressed. Pressing **ENTER** stores the new value in memory. This flash message momentarily appears as confirmation.

Alphanumeric text

Text settings have data values that are fixed in length, but user-defined in characters. They can be upper-case letters, lower-case letters, numerals, and a selection of special characters.

There are several places where text messages can be programmed to allow the relay to be customized for specific applications. One example is the Message Scratchpad. Use the following procedure to enter alphanumeric text messages.

For example, enter the text “Breaker #1”.

1. Press the decimal point to enter text edit mode.
2. Press the **VALUE** keys until the character 'B' appears; press the decimal key to advance the cursor to the next position.
3. Repeat step 2 for the remaining characters: r,e,a,k,e,r, ,#,1.
4. Press **ENTER** to store the text.
5. If you have any problem, press **HELP** to view context sensitive help. Flash messages appear sequentially for several seconds each. For the case of a text setting message, pressing **HELP** displays how to edit and store new values.

4.2.7.2 Graphical front panel

When enabling an element in the EnerVista software that outputs to an actual value, the actual values menu is not updated on the graphical front panel via Ethernet connection when that menu is active on the graphical front panel. Navigate out and back into the menu for activation.

Numerical data

This example outlines how to change the FLASH MESSAGE TIME setting. Flash messages are status, warning, error, and information messages displayed in response to certain key presses during settings programming. An example is a confirmation message upon saving settings. This setting specifies how long to display the message.

Press the **Menu** pushbutton to display the main menu.

Figure 4-57: Main menu

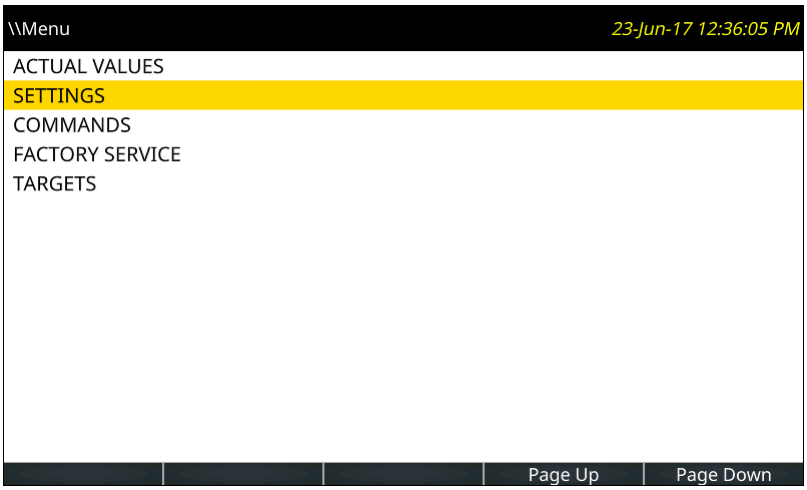

Use the Up or Down pushbutton to select **SETTINGS**, then press the Right or **ENTER** pushbutton.

Figure 4-58: Settings menu

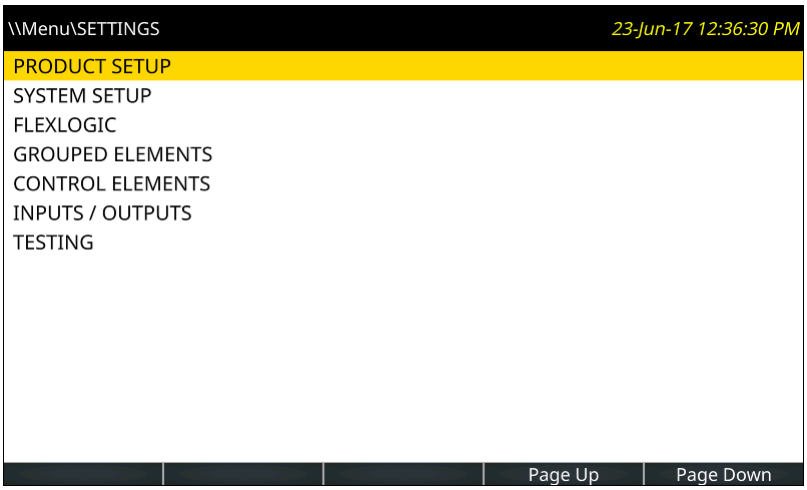

With **PRODUCT SETUP** selected, press the Right or **ENTER** pushbutton.

Figure 4-59: Product Setup menu

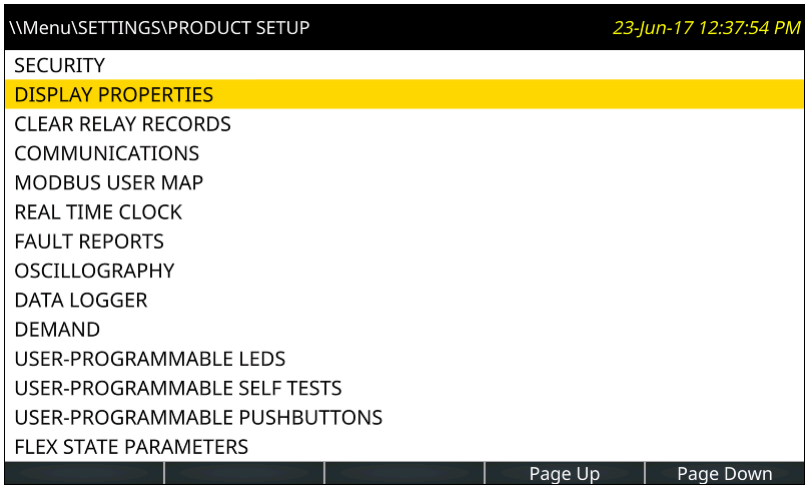

Use the Up or Down pushbutton to select **DISPLAY PROPERTIES**, then press the Right or **ENTER** pushbutton.

Figure 4-60: Display Properties menu

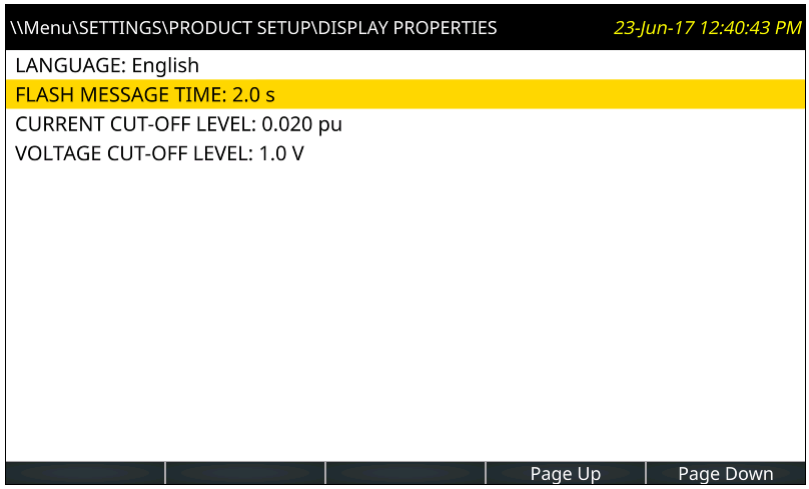

Use the Up or Down pushbutton to select **FLASH MESSAGE TIME**, then press the Right or **ENTER** pushbutton. If the relay is configured to require login to edit settings, and the user is not already logged in, the login page displays. When the user has successfully logged in, the setting is opened for edit. As the **FLASH MESSAGE TIME** setting accepts a numerical value, a keypad displays. The time is to be changed to 4.0 seconds.

The current setting displays. A flashing cursor line marks the insertion point, initially positioned after the last character of the setting. The setting range displays under the text.

Press the **<--** **Move Cursor** and **Move Cursor** **-->** Tab pushbuttons to move the insertion point. Place it after the 2.

Press the **Backspace** Tab pushbutton to remove the character to the left of the cursor, in this case the 2.

Using the arrow keys, enter another time, for example 4 for four seconds. These Up, Down, Left, and Right pushbuttons move the keypad key selector. Pressing the **ENTER** pushbutton with the **-** key selected inverts the sign. Pressing the **ENTER** pushbutton with the decimal point selected enters that character at the insertion point. Push **ENTER** now to accept the 4.

Figure 4-61: Settings page with numeric keypad

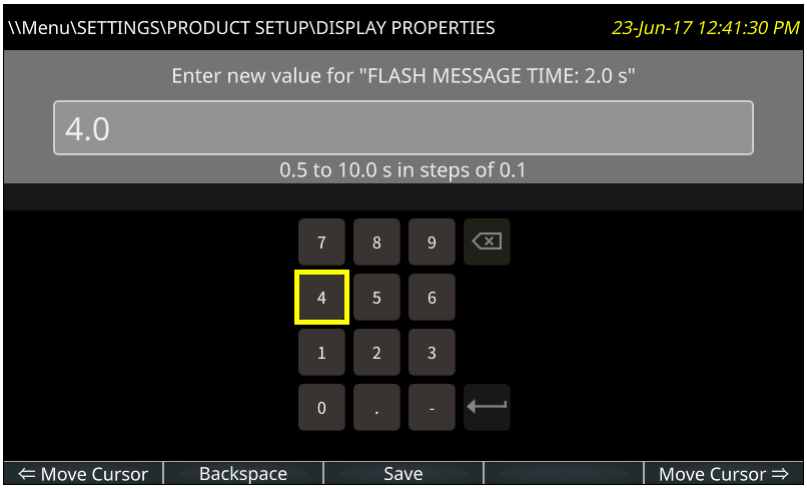

Press the **Save** Tab pushbutton, which does a range check on the value, saves the setting when valid, closes the page, and displays the previous page.

When a setting is not saved due to an invalid value, a message flashes, for example being out of range. In cases where the relay needs to be restarted for settings to take effect, the flash message advises.

Setting entry can be cancelled without impact on the original value by pressing the **ESCAPE** or **Home** pushbutton.

Alphanumeric text

Settings that accept alphanumeric values display a keyboard. An example is a pushbutton name.

The **&123** key toggles between text and numbers.

The shift key (up arrow on keyboard) is green upon activation, while the keyboard letters switch to upper case. Double-click the shift key to lock capital lettering, or full capitals.

The globe key (shown greyed-out) toggles the keyboard language between English and another display language selected, for example between English and French. (The second language needs to be activated under **Settings > Product Setup > Display Properties**.)

For Japanese and Chinese, up to 10 characters can be input in a field, not 20.

To add accents, highlight a key and hold the **ENTER** pushbutton on the graphical front panel. Any special characters associated with the key display.

To avoid conflict with XML programming, do not enter the following characters on the Annunciator and Metering editor panels: " (quotation mark), ' (apostrophe), < (less than), > (greater than), & (ampersand). When used, the text following the character does not display or the Annunciator and Metering panels do not display on the graphical front panel.

Figure 4-62: Settings page with keyboard and accents

4.2.8 View actual values

4.2.8.1 Graphical front panel

In addition to data viewable in the **Actual Values** menu on the front panel, phasor diagrams and metered data can be displayed. The metered data can be arranged as a table.

The update rate of metered values is 500 ms.

A phasor page for each configured AC Source and up to five user-configurable metering pages can be displayed. The phasor pages are not configurable. Each phasor page shows a phasor plot and numerical values of all currents, voltages, and symmetrical components of a single AC source.

The Annunciator and Metering pages can be configured to display data. Each has a user-configured number of rows and columns. Each cell can include either configurable static text or the value of a selected FlexLogic operand, FlexAnalog operand, or actual value.

To display a metering page, press the **Home** pushbutton, then the **Metering** Tab pushbutton. The first metering page opens, with phasor pages listed before tabular pages. The Tab pushbuttons display any other metering page, as do the Up, Down, Left and Right pushbuttons. The current page is highlighted with a blue Tab pushbutton.

Each phasor page has a name, which consists of the value of the SOURCE NAME # setting appended with " Phasors." Phasor pages that have no configured CTs or VTs do not have a Tab pushbutton, and phasor pages that have no configured cells cannot be displayed.

Figure 4-63: Phasor display

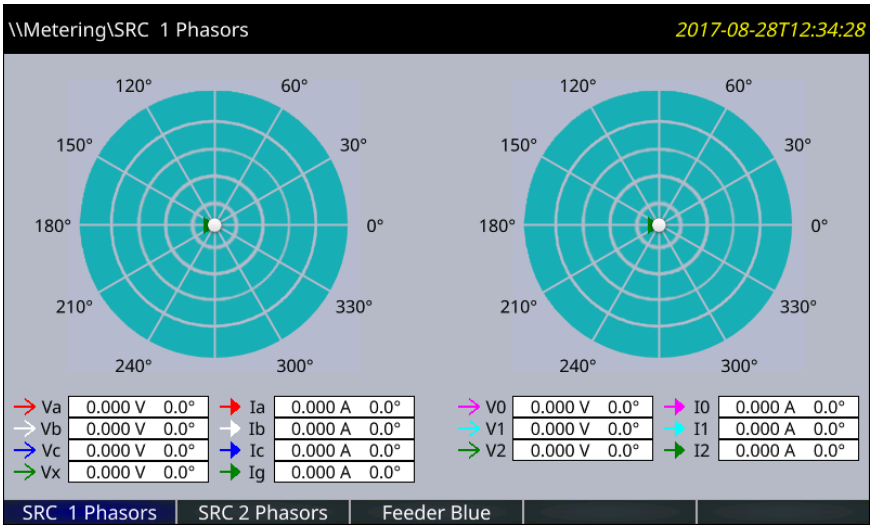

4

The configurable name displays in the header and Tab pushbutton label. Factory default names are Page 1, Page 2, and so on.

Figure 4-64: Metered actual values

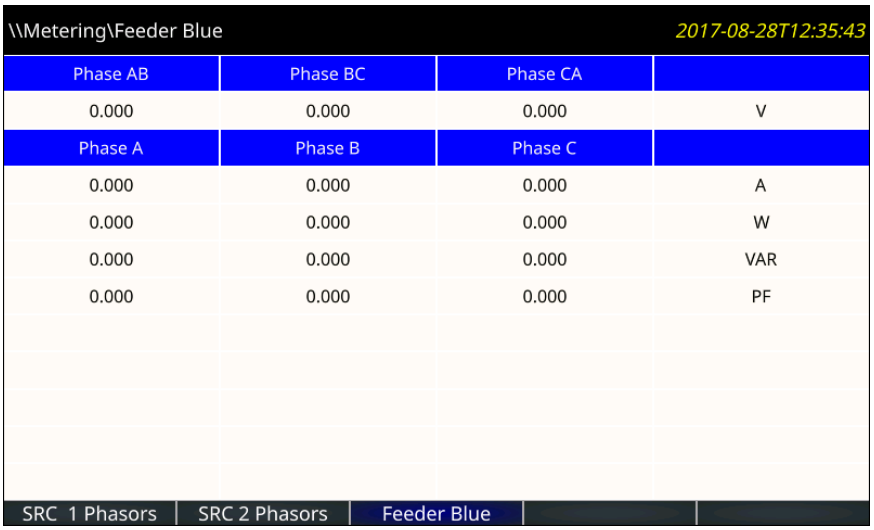

The phasor sources are configured under **Settings > System Setup > Signal Sources**. The tables to display the actual values are configured in the software under **Settings > Product Setup > Graphical Panel > Metering Editor**.

4.2.9 Breaker control

The C70 can interface with associated circuit breakers. In many cases the application monitors the state of the breaker, that can be presented on front panel LEDs, along with a breaker trouble indication. Breaker operations can be manually initiated from the front panel keypad or automatically initiated from a FlexLogic operand. A setting is provided to assign names to each breaker; this user-assigned name is for the display of related flash messages. These features are provided for two breakers; the user can use only those portions of the design relevant to a single breaker, which must be breaker 1.

It is assumed in the following discussion that the **SETTINGS** ⇨⇩ **SYSTEM SETUP** ⇨⇩ **BREAKERS** ⇨ **BREAKER 1(2)** ⇨ **BREAKER FUNCTION** setting is "Enabled" for each breaker.

4.2.9.1 Control mode selection and monitoring

Installations can require that a breaker be operated in the three-pole only mode (3-pole), or in the one and three-pole (1-pole) mode, selected by setting. If the mode is selected as three-pole, a single input tracks the breaker open or closed position. If the mode is selected as one-pole, all three breaker pole states must be input to the relay. These inputs must be in agreement to indicate the position of the breaker.

For the following discussion it is assumed that the **SETTINGS ⇨⇩ SYSTEM SETUP ⇨⇩ BREAKERS ⇨ BREAKER 1(2) ⇨⇩ BREAKER 1(2) PUSH BUTTON CONTROL** setting is "Enabled" for each breaker.

4.2.9.2 Front panel (user key) control

After the 30 minute interval during which command functions are permitted after a correct command password, the user cannot open or close a breaker via the keypad. The following discussions begin from the not-permitted state.

4.2.9.3 Control of two breakers

For the following setup example, the **(Name)** field represents the user-programmed variable name.

For this example, the relay is connected and programmed for both breaker 1 and breaker 2. The **USER 1** key performs the selection of which breaker is to be operated by the **USER 2** and **USER 3** keys. The **USER 2** key manually closes the breaker, and the **USER 3** key manually opens the breaker.

ENTER COMMAND PASSWORD	This message appears when the **USER 1**, **USER 2**, or **USER** 3 key is pressed and a **COMMAND PASSWORD** is required, that is, if **COMMAND PASSWORD** is enabled and no commands have been issued within the last 30 minutes.
Press USER 1 To Select Breaker	This message appears if the correct password is entered or if none is required. This message displays for 30 seconds or until the **USER 1** key is pressed again.
BKR1-(Name) SELECTED USER 2=CLS/USER 3=OP	This message displays after the **USER 1** key is pressed for the second time. Three possible actions can be performed from this state within 30 seconds as per the following items (1), (2) and (3).
(1) **USER 2 OFF/ON To Close BKR1-(Name)**	If the **USER 2** key is pressed, this message appears for 20 seconds. If the **USER 2** key is pressed again within that time, a signal is created that can be programmed to operate an output relay to close breaker 1.
(2) **USER 3 OFF/ON To Open BKR1-(Name)**	If the **USER 3** key is pressed, this message appears for 20 seconds. If the **USER 3** key is pressed again within that time, a signal is created that can be programmed to operate an output relay to open breaker 1.
(3) **BKR2-(Name) SELECTED USER 2=CLS/USER 3=OP**	If the **USER 1** key is pressed at this step, this message appears showing that a different breaker is selected. Three possible actions can be performed from this state as per (1), (2) and (3). Repeatedly pressing the **USER 1** key alternates between available breakers. Pressing keys other than **USER 1**, **2**, or **3** at any time cancels the breaker control function.

4.2.9.4 Control of one breaker

For this application, the relay is connected and programmed for breaker 1 only. Operation for this application is identical to that described in the previous section for two breakers.

4.2.10 Change passwords

The information in this section refers to password security. For information on how to set the password for the first time or change CyberSentry passwords, see the previous chapter or the Settings > Product Setup > Security > CyberSentry section in the next chapter.

The C70 supports password entry from a local or remote connection.

Local access is defined as access to settings or commands via the front panel. This includes both keypad entry and the RS232 port. Remote access is defined as access to settings or commands via any rear communications port. This includes both Ethernet and RS485 connections. Any change to the local or remote password enables this functionality.

When entering a settings or command password via EnerVista or any serial interface, the user must enter the corresponding connection password. If the connection is to the back of the C70, the remote password must be used. If the connection is to the RS232 port of the front panel, the local password must be used.

There are two user security access levels, setting and command, for which you can set a password for each. Use of a password for each level controls whether users can enter commands or change settings. Another option is to specify setting and/or command access for individual user accounts.

- **Setting** — Allows the user to make any changes to any of the setting values:
  - Changing any setting
  - Test mode operation
- **Command** — Restricts the user from making any settings changes, but allows the user to perform the following operations:
  - Changing the state of virtual inputs
  - Clearing the event records
  - Clearing the oscillography records
  - Changing the date and time
  - Clearing the breaker arcing current
  - Clearing the data logger
  - Clearing the user-programmable pushbutton states

To enter the initial setting or command password:

1. Press the **MENU** key until the **SETTINGS** header flashes momentarily and the **PRODUCT SETUP** message appears on the display.
2. Press the **MESSAGE** right arrow until the **ACCESS LEVEL** message appears on the display.
3. Press the **MESSAGE** down arrow until the **CHANGE LOCAL PASSWORDS** message appears on the display.
4. Press the **MESSAGE** right arrow until the **CHANGE SETTING PASSWORD** or **CHANGE COMMAND PASSWORD** message appears on the display.

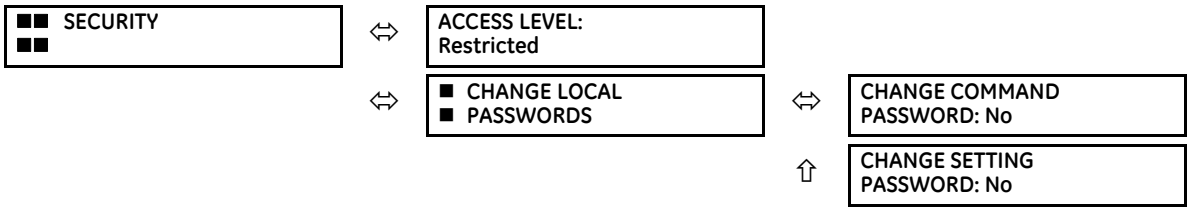

5. After the **CHANGE...PASSWORD** message appears on the display, press the **VALUE** up or down arrow to change the selection to "Yes."
6. Press the **ENTER** key and the display prompts you to **ENTER NEW PASSWORD**.
7. Type in a password and press the **ENTER** key.

8. When **VERIFY NEW PASSWORD** displays, re-type the password and press **ENTER**.

```
CHANGE SETTING
PASSWORD: No
```

```
CHANGE SETTING
PASSWORD: Yes
```

```
ENTER NEW
PASSWORD: ##########
```

```
VERIFY NEW
PASSWORD: ##########
```

```
NEW PASSWORD
HAS BEEN STORED
```

9. When the **NEW PASSWORD HAS BEEN STORED** message appears, your new Setting (or Command) password is active.

4.2.11 Invalid password entry

By default, when an incorrect Command or Setting password has been entered via the front panel three times within five minutes, the LOCAL ACCESS DENIED FlexLogic operand is set to "On" and the C70 does not allow settings or command level access via the front panel for five minutes.

By default, when an incorrect Command or Setting password has been entered via any external communications interface three times within five minutes, the REMOTE ACCESS DENIED FlexLogic operand is set to "On" and the C70 does not allow settings or command access via the any external communications interface for five minutes. The REMOTE ACCESS DENIED FlexLogic operand is set to "Off" after five minutes for a Command password or 30 minutes for a Settings password.

These default settings can be changed in EnerVista under **Settings > Product Setup > Security**.

4.3 Logic diagrams

Logic diagrams in this instruction manual provide an overview of function and settings. A logic diagram is based on

- Inputs-on the left side, which are setting and operands
- Logical gates, which is Boolean algebra to combine logical lines using AND, OR, NOT, and other gates to get a new logical state
- Logical operators, which are timers, one-shot operations, latches, and so on
- Outputs-on the right side, which are products of the manipulations with inputs, logical gates, and logical operators to produce new operands and define the output state of the element

True and false values are denoted by 1 and 0 respectively. A function usually is high/on/enabled when 1.

Reading from right to left in the following diagram, the TRIP BUS 1 OP and TRIP BUS 1 PKP FlexLogic operands on the right side are triggered when either the settings or reset latch in the middle of the diagram is triggered. When this applies, the TRIP BUS 1 OP operand is triggered after the delay set by the **TRIP BUS 1 PICKUP DELAY** or **TRIP BUS 1 RESET DELAY** setting, while the TRIP BUS 1 PKP operand initiates immediately. The settings or reset latch in the middle of the diagram is triggered as follows.

- For the reset, one of three conditions are required to meet the OR requirement shown at the bottom left. That is, the **TRIP BUS 1 LATCHING** setting must be 0=Disabled (which is negated by the NOT function to become 1=Enabled), output from the TRIP BUS 1 RESET FlexLogic operand must be 1, or output from the RESET OP FlexLogic operand must be 1.
- For the settings, one of 16 input conditions at the top left must be met for the OR, the **TRIP BUS 1 FUNCTION** must be Enabled, and the TRIP BUS 1 BLOCK output must output as 0, which is then negated/reversed by NOT to become 1.

Table 4-2: Logic diagram symbols

Symbol	Description
= Off	Output from FlexLogic operand, so user-defined
= Enabled	1 = Enabled and 0 = Disabled
OR	Any function input on the left side satisfies the condition
AND	All functions input on the left side are required to satisfy the condition

Symbol	Description
O	Not. Negates/reverses the output, for example 0 becomes 1.
●	Connection
S, R	Set, Reset
T_{PKP}	Timer pickup. Triggered by the settings latch in the diagram.
T_{RST}	Timer reset. Triggered by the reset latch in the diagram.

Figure 4-65: Logic diagram

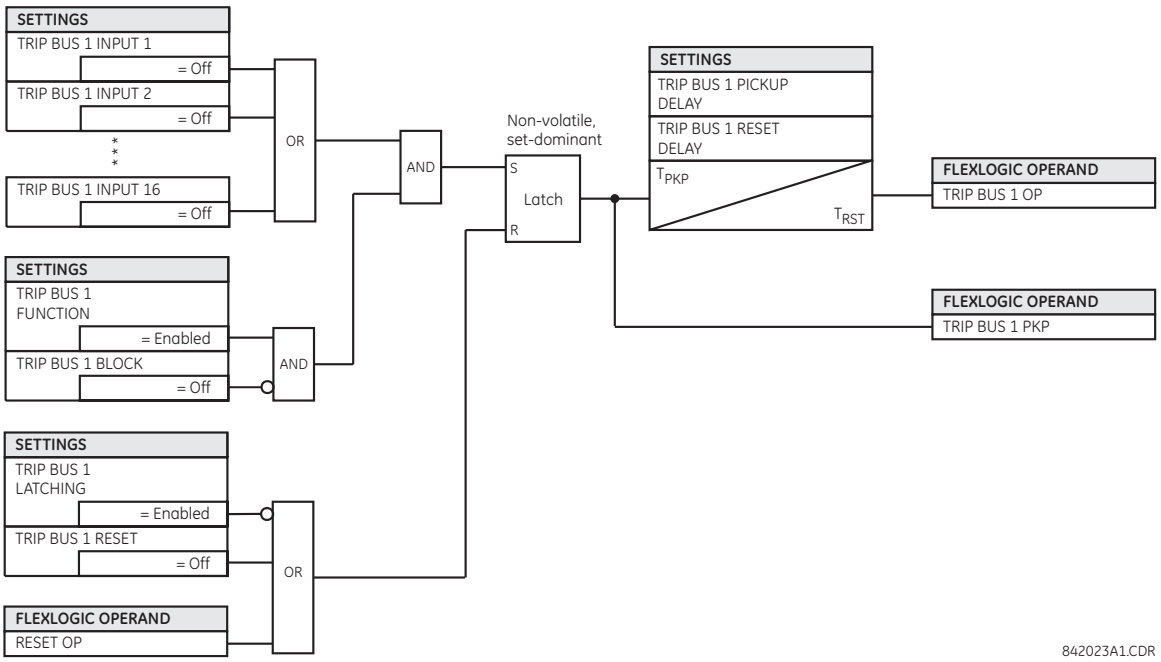

4.4 FlexLogic design using Engineer

Parts of EnerVista Viewpoint Engineer software are integrated in the EnerVista UR Setup software. Engineer can be used to create and modify FlexLogic that is used by a device, such as to monitor output, monitor triggers, and create self-tests.

Features include

- Automatically displays existing FlexLogic
- Drag-and-drop interface
- Open multiple tabs and edit simultaneously
- Display symbols in IEC, ISO, or UR formats
- Export a diagram as BMP file or copy it to the clipboard for import into other applications
- Scale and print files in various paper sizes
- Works with all UR firmware versions

The figure shows an example where several inputs are used to trigger an output. With the OR function, any one of the inputs can trigger the output.

Figure 4-66: Inputs triggering output in Engineer

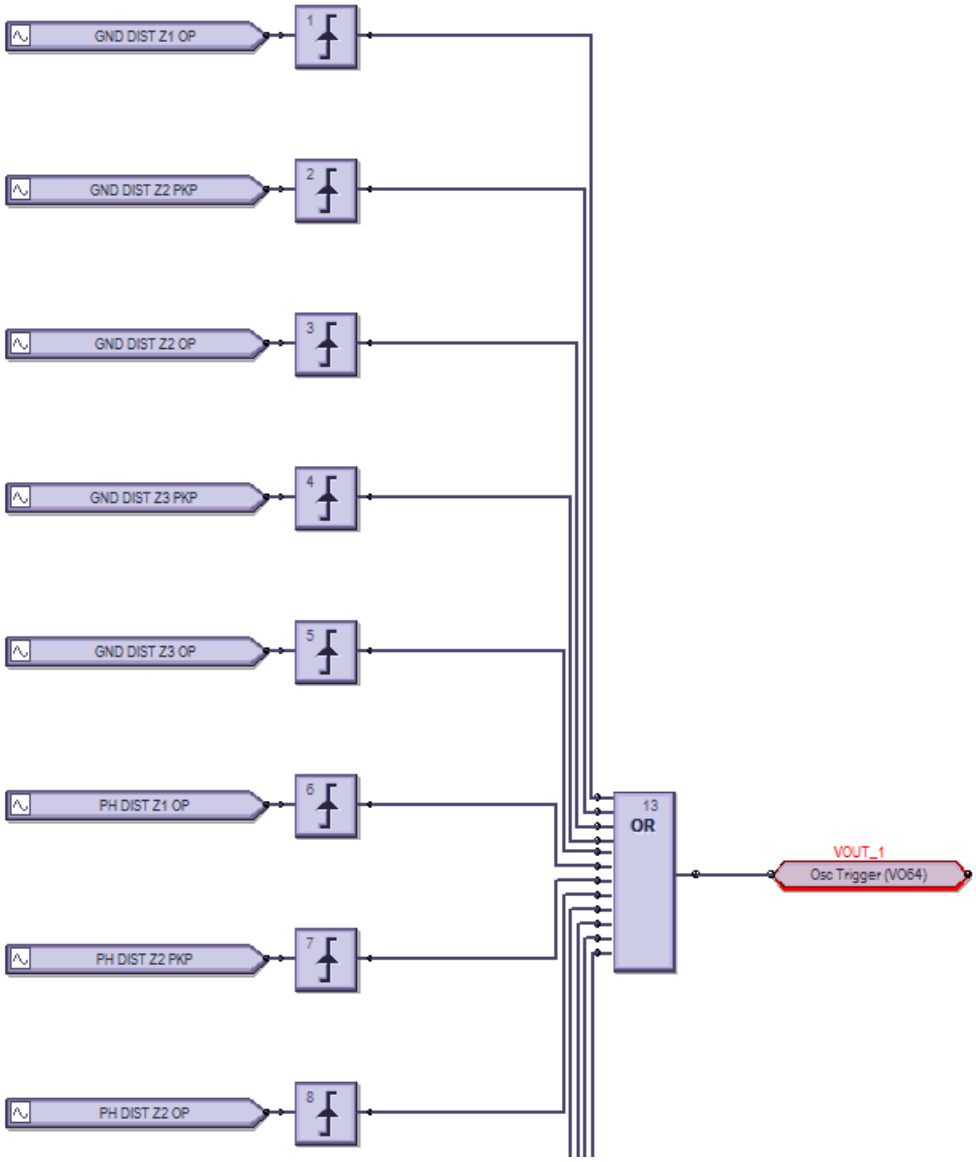

The process is as follows:

- Modify or create a logic diagram in the Offline Window area of the EnerVista UR Setup software
- Compile it and troubleshoot any errors
- The logic populates automatically into the FlexLogic Equation Editor
- Upload the file to the live device
- Monitor the output

This section explains how to use Engineer. It outlines the following topics:

- Design logic
- Send file to and from device
- Monitor logic
- View front panel
- Generate connectivity report
- Preferences

- Toolbars

4.4.1 Design logic

FlexLogic can be created with a block diagram. Note that although work is completed in the Offline Window area of the software, communication occurs with the online device, for example when switching to monitoring mode.

The following procedures are outlined:

- Examples
- Add existing FlexLogic equations
- Create a logic diagram/sheet
- Rapidly add logic blocks in sequence
- Connect two logic diagrams/sheets
- Optimize the logic
- Change logic order
- Search logic
- Exclude sheet from compile

4.4.1.1 Examples

The symbols are displayed in the UR format.

Create oscillography trigger every three minutes

Figure 4-67: Three-minute timer turns on LED for 10 seconds

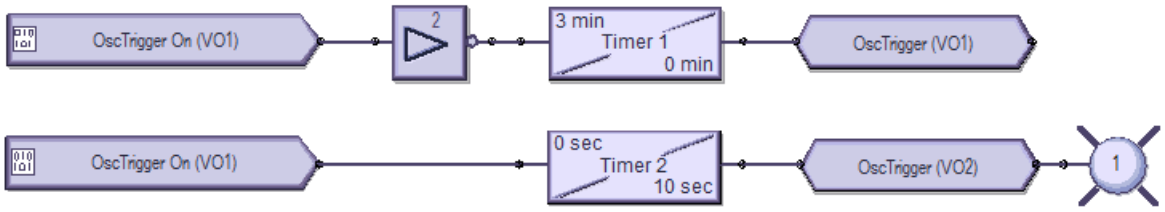

Preparation — Under **Settings > Inputs/Outputs > Virtual Outputs**, the first and second virtual outputs are named OscTrigger

Top logic — Three-minute timer trigger

Bottom logic — Turn on LED 1 for 10 seconds when the trigger starts

Create data logger trigger every seven minutes

Figure 4-68: Seven-minute timer turns on LED for 10 seconds

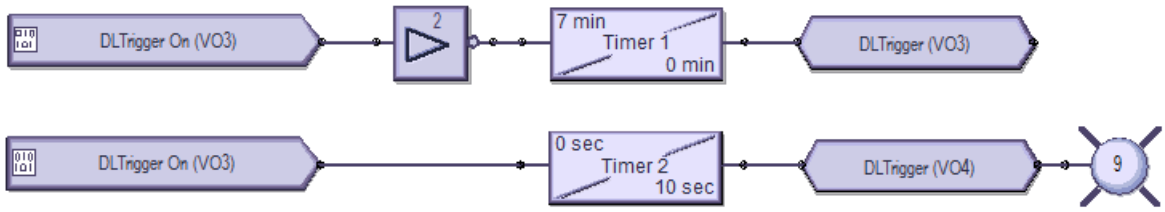

Preparation — Under **Settings > Inputs/Outputs > Virtual Outputs**, virtual outputs 3 and 4 are named DLTrigger

Top logic — Seven-minute timer trigger

Bottom logic — Turn on LED 9 for 10 seconds when the trigger starts

Create events every minute, then every 100 ms

Figure 4-69: One-minute timer turns on LED and creates events every 100 ms

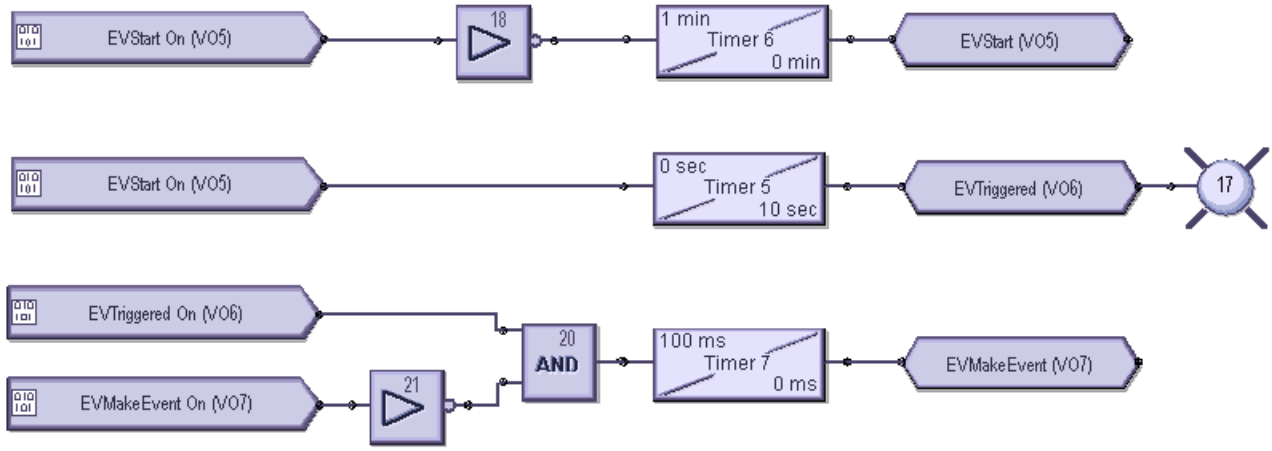

Preparation — Under **Settings > Inputs/Outputs > Virtual Outputs**, virtual output 5 is named EVStart, 6 is named EVTriggered, and 7 is named EVMakeEvent

Top logic — One-minute timer trigger

Middle logic — Turn on LED 17 for 10 seconds when trigger starts

Bottom logic — Create events at 100 ms intervals for the same 10 second period

4.4.1.2 Add existing FlexLogic equations

A logic diagram can be created using existing FlexLogic equations (this section) or by creating new ones (next section).

When using existing equations, you modify them in the FlexLogic Equation Editor in the Offline Window area, then apply them.

NOTE

The FlexLogic Equation Editor window is in view-only mode when the Logic Designer is open. To instead work in the FlexLogic Equation Editor, close the Logic Designer window, then re-open the FlexLogic Equation Editor.

To create a logic diagram using existing FlexLogic equations:

1. In the Offline Window area, modify the FlexLogic for the device under **FlexLogic > FlexLogic Equation Editor**. If the device is not listed, right-click the device in the Online Window area and select the **Add Device to Offline Window** option.

   Upon saving the modified FlexLogic, a yellow icon appears for the device in the Offline Window area to indicate that the logic differs from the Online device.
2. In the Offline Window area, access **Engineer** for the device, then **Logic Designer**. The logic opens.
3. Click the **Edit > Auto Populate Workbook** menu item. If the software prompts if you want to keep or discard existing sheets, either is acceptable, with the older excluded sheeted being denoted by brackets, such as < Sheet 1 >. The logic displays in the various tabs. The FlexLogic created in the equation editor appears in Sheet 1, for example.

4.4.1.3 Create logic diagram

Upon access of the Logic Designer, the FlexLogic equations of the device display. You can create new logic in new sheets or modify the ones that display.

This procedure uses input / output logic as an example.

1. In the Offline Window area, access **Engineer** for the device, then **Logic Designer**. If the device is not listed, right-click the device in the Online Window area and select the **Add Device to Offline Window** option.

Figure 4-70: Access Engineer in the Offline Window area

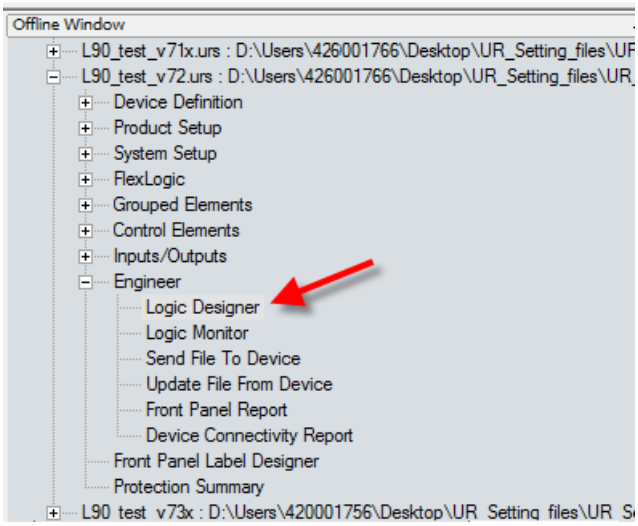

4

A default block diagram opens that shows 48 inputs (boxes) and 48 user-programmable LEDs (circles).

For the graphical front panel, no LEDs can be added to the window and the LEDs are removed when opening any existing files. For these existing files with the LEDs removed, save the file without them.

Figure 4-71: Default view of FlexLogic designer

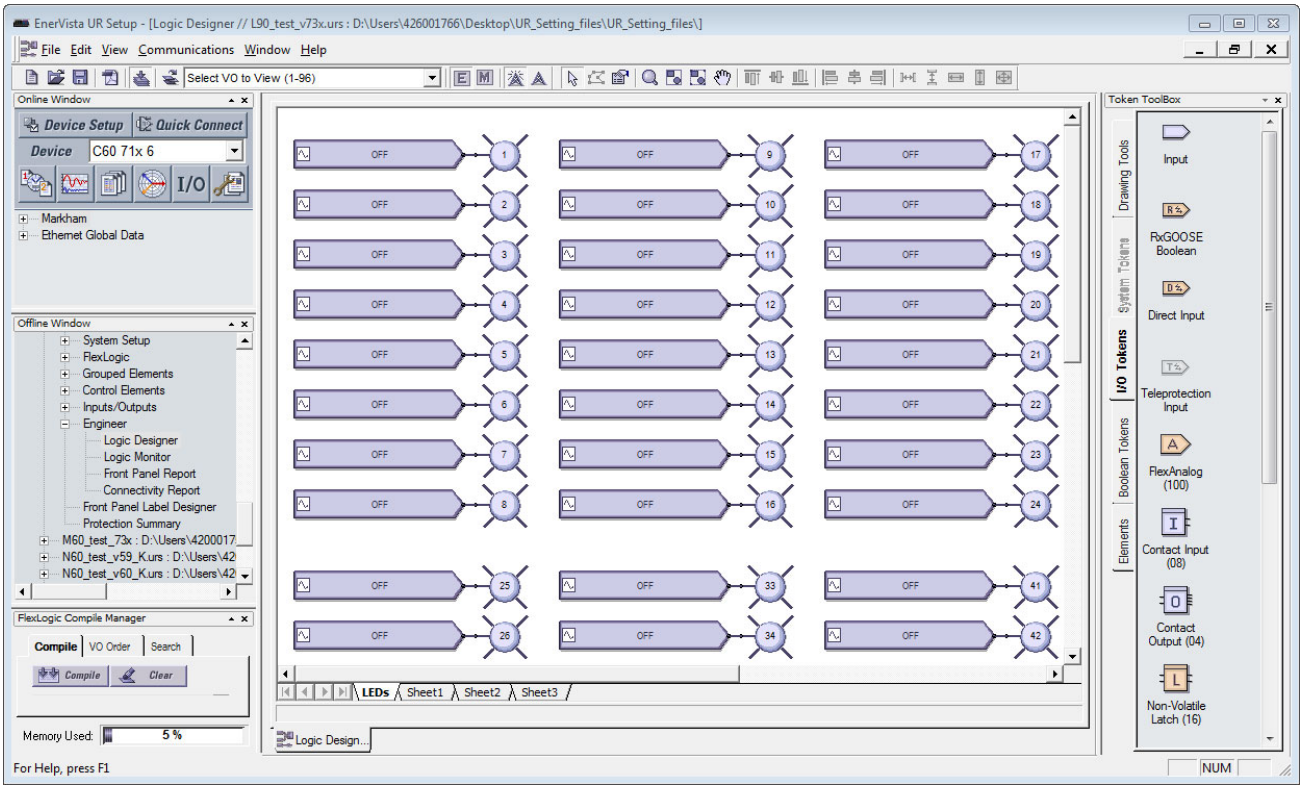

2. Optionally delete the default logic diagram by right-clicking its tab at the bottom of the window and selecting **Delete**.
3. To add a blank sheet, click **Edit > Add Sheet**. A new tab displays. Or use the last tab displayed, which is a blank sheet.
4. Optionally right-click the new tab and **Rename** it.
5. Add the input blocks to the logic diagram. For example, click the **I/O Tokens** tab on the right, click the **Input** element,

then click in the logic sheet to add it. Or drag-and-drop it.

6. Double-click the block on the sheet to configure it, selecting from the two drop-down lists. The figure shows that virtual input 61 is being added. The **View Associated Screen** button opens its settings window.

Figure 4-72: Configuring an input block

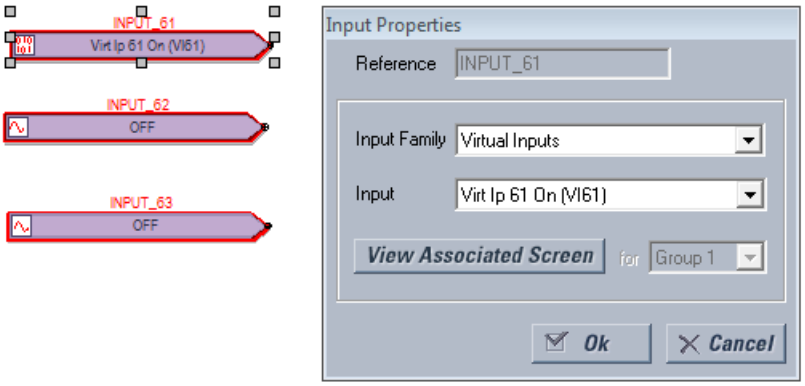

7. Add the output blocks to the logic diagram. For example, click the **I/O Tokens** tab, click the **Virtual Output** element, then click in the logic sheet to add it. Double-click the block on the sheet to configure it. For the name, make it unique. The figure shows virtual output 61 is being added, with a suffix of "io" added to the name to make it unique. Note that the outline color of a block is red until it is configured, and that this properties window varies by block and the selectable options by order code.

Figure 4-73: Configuring an output block

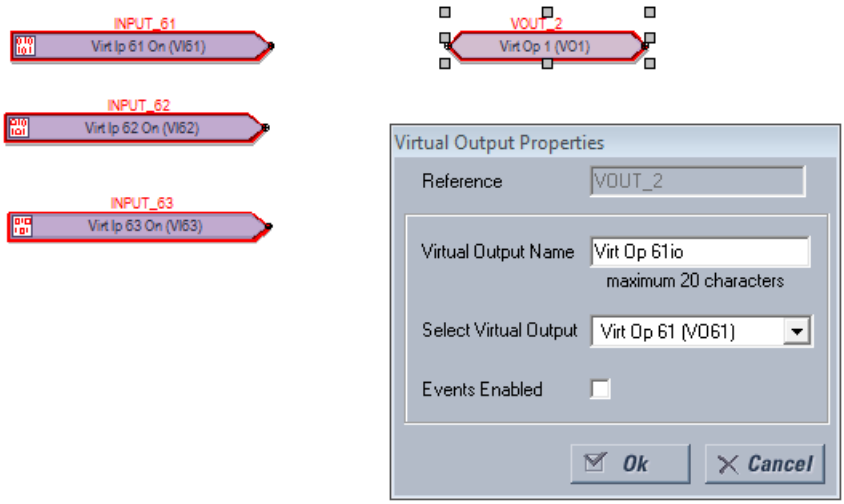

8. Connect the input blocks to the output blocks by drawing a line as follows. Click at the end of one block and drag the line to the next block. Or click the **Drawing Tools** tab, then select the **Line** option. The cursor needs to be at the connection point to end the line, not elsewhere on the block. Note that the outline color is no longer red on the blocks.

Figure 4-74: Completed inputs and outputs

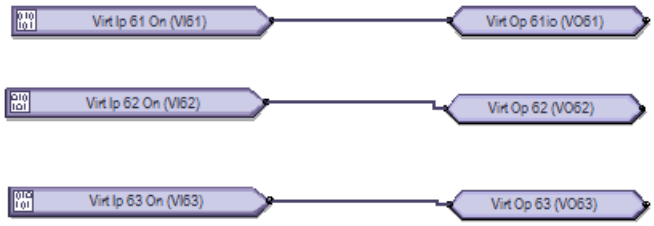

9. Add any remaining blocks or information. Right-click a block to copy and paste it. Notes are as follows.

   Add a text box — Drawing Tools > Text

   Add a FlexElement — Elements > FlexElement. An analog input is expected where a small arrow head shows in the box.

Figure 4-75: FlexElement accepts analog inputs on left side where arrow heads display

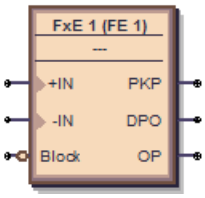

Add an Element — **Elements** tab. Available elements reflect the product, for example the **Control Elements** category.

Figure 4-76: Elements reflect Control Elements

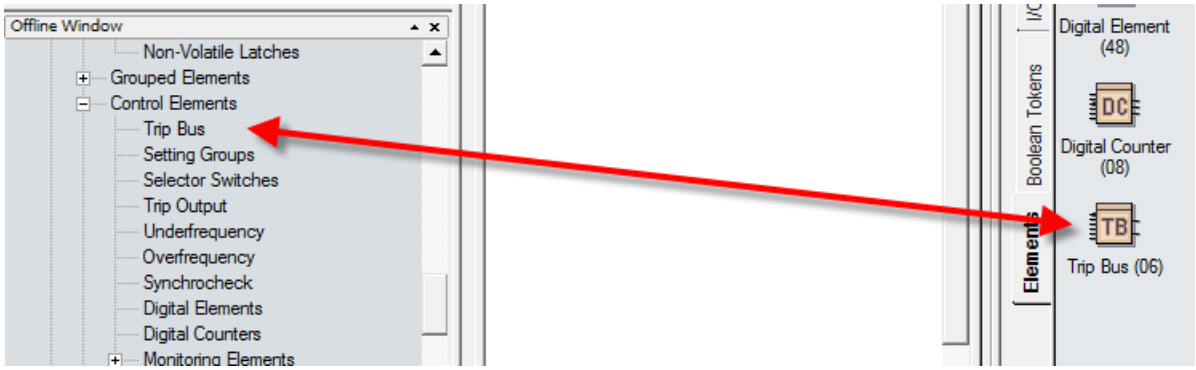

10. Check for any blocks that have a red outline. These are invalid. Fix them before continuing, for example by configuring them.

11. Compile the logic diagram to check for errors by clicking the **Compile** button at the bottom left or by pressing the **F7** key.

    If prompted about a message about sorting, click **Yes** to apply the default (for this example), which can be automatic sorting based on an algorithm that applies fastest execution time.

    With successful compiling, the file is saved and the FlexLogic equations populate automatically. Scroll up through the compile messages, with the red errors being the only messages that require fixing before proceeding.

    The figure shows that we forgot to add the "Io" suffix to the names of virtual outputs 62 and 63, as indicated by "Warning: Virtual output xx using default name." This warning is a minor warning.

    The warning "input using disabled feature" means that input needs to be enabled. Double-click the block, click the **View Associated Screen** button, enable the setting, save, and recompile.

    The output and messages are explained in the next section.

Some information displayed in the compile messages updates automatically, for example messages after a device is unplugged.

Figure 4-77: Compile and check the logic

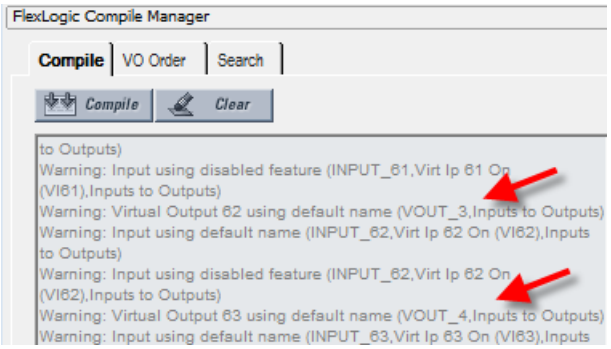

12. View the FlexLogic equations by navigating in the Offline Window area to **FlexLogic > FlexLogic Equation Editor**. The window opens with the entries displayed in the next tab.

Figure 4-78: Logic displayed in FlexLogic Equation Editor

FLEXLOGIC ENTRY	TYPE	SYNTAX
View Graphic	View	View
FlexLogic Entry 1	Virtual Inputs On	Virt Ip 61 On (VI61)
FlexLogic Entry 2	Assign Virtual Output	= Virt Op 61io (VO61)
FlexLogic Entry 3	Virtual Inputs On	Virt Ip 62 On (VI62)
FlexLogic Entry 4	Assign Virtual Output	= Virt Op 62io (VO62)
FlexLogic Entry 5	Virtual Inputs On	Virt Ip 63 On (VI63)
FlexLogic Entry 6	Assign Virtual Output	= Virt Op 63io (VO63)

13. Save the work.

The logic diagram has been created and the FlexLogic equations populated. The next steps are to upload the file to the device and to monitor the device.

4.4.1.4 Compiled results and warning messages

When a yellow caution symbol displays in the Offline Window area, it means that the settings file is not synchronized with the online device. Right-click the device in the Offline Window area, and select the **Update SCL files** option. SCL refers to the Substation Configuration Language. An Instantiated IED capability description (IID) file is an example of an SCL file and contains the actual settings on a UR device.

Figure 4-79: Settings files not synchronized between offline and online files

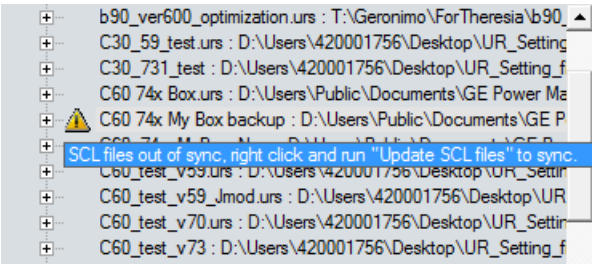

When the **Update SCL files** option is selected, the CID and IID files in the device folder are updated by the user configuration in the IEC 61850 panel and thereby become synchronized. The CID file and the IID file (depending on the preference 'Do not update IID file when updating SCL files') are updated. If the CID file is not already there, it is generated.

The location of these files is C:\ProgramData\GE Power Management\urpc, for example, in the Offline and Online folders. Any FlexLogic equations entered in the Offline Window area are erased. The logic drawn in the Logic Designer window in Engineer in the Offline Window area remain. The warning icon disappears after updating.

The following information is contained in the compile window.

Figure 4-80: Compiled results

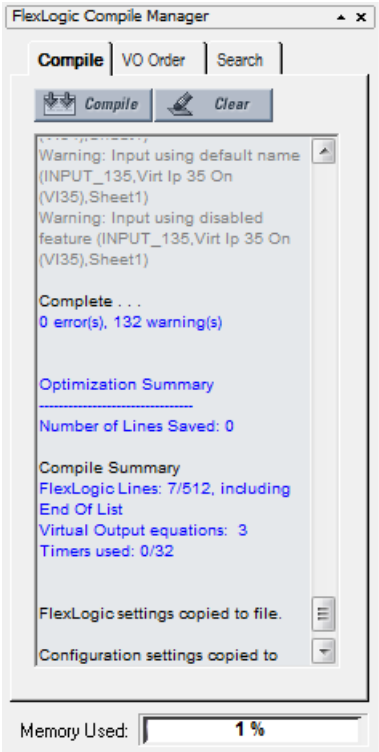

Number of Lines Saved — The number of compiled logic lines eliminated by using the optimization algorithm, as set in the **Optimize Compiled Output** option of the Preferences. In the example shown, no lines were saved because the optimizer is disabled.

FlexLogic Lines — The number of lines that the compiled logic uses, for example seven of 512 available.

Virtual Output equations — The number of FlexLogic equations used in the Logic Designer window.

Timers used — The number of timers used in the Logic Designer window.

Memory Used — The percent of memory used in the Logic Designer window.

Errors

Table 4-3: Errors from compiling

Category	Block or gate affected	Message	Description
Error	All	Number of lines (nnn) exceeds maximum limit of 512	The compiled result exceeds the limit of 512. Reduce the number of equations to 512 or less.
Error	Tag-In	Tag-in not configured (TAG_ID, SheetReference)	A Tag-In is connected to a circuit but the Tag-In is not referencing an existing Tag-Out
Error	1 Shots	One Shot is over limit (SYMBOL_ID, SheetReference)	The number of One-Shots contained within all of the VO blocks has exceeded the maximum allowed for the firmware revision. This value can either be 0 or 32.
Error	=VO	VO has no inputs (VO_ID, SheetReference)	A Virtual Output block is located within the FlexLogic diagram and there is no block connected as input to it. Connect and identify the inputs.

Category	Block or gate affected	Message	Description
Error	Timer	Timer used more than once (TIMER_ID, SheetReference)	The same timer is used in more than one place in the editor. This means either the circuit that the Timer belongs to has been branched, or the Timer has been duplicated.
Error	Input	Unrecognized Parameter (SYMBOL_ID,Name,SheetReference)	An Input symbol is configured to an item that is not recognized by the current order code and version. Possible cause: The order code and/or version of the settings file was converted causing the input parameter to become unavailable.

Warnings

When using the 'Reset OP' operand, a warning can appear indicating that this is a disabled feature. This means that the Reset Settting's FlexLogic operand is set to OFF. Resetting of the relay can be done by pressing the reset button on the front panel of the relay or by sending a Reset command through communications.

Table 4-4: Warning messages from compiling

Category	Block or gate affected	Message	Description
Minor warning	Input	Input set to unused VO (SYMBOL_ID,Name,Sheet)	An Input symbol is using an unassigned Virtual Output
Major warning	Tag-Out	Tag-out not connected (TAG_ID,Sheet)	A Tag-Out symbol has no input
Major warning	All	Symbol not connected (SYMBOL_ID,Name,Sheet)	A symbol's input and/or output is not connected and is not part of a VO block. Draw the input and/or output to the block.
Minor warning	=VO	Virtual Output n using default name (VO_ID,Sheet)	The Assigned Virtual Output is using the default name. Change the name.
Minor warning	Input	Input using default name (SYMBOL_ID,Name,Sheet)	An Input symbol is using a Contact Input, Contact Output, Digital Element, FlexElement, or Digital Counter set to the default name. Change the name so that it is unique.
Setting warning	Input	Input using disabled feature (SYMBOL_ID,Name,Sheet)	An Input symbol is using a disabled Virtual Input, Contact Input, Digital Element, FlexElement, Digital Counter, Control Pushbutton, Programmable Pushbutton, Contact Output, or Protection/Monitoring Element. Enable it and try again.
Major warning	Input	Input set to OFF (SYMBOL_ID,Sheet)	An Input symbol is set to OFF
Major warning	Input	Input set to ON (SYMBOL_ID,Sheet)	An Input symbol is set to ON
Setting warning	Input	Contact Output Operate is OFF (SYMBOL_ID, Contacts)	The symbol block is using the default setting of OFF
Setting warning	Input	Contact Output Seal-In is OFF (SYMBOL_ID, Contacts)	The symbol block is using the default setting of OFF

4.4.1.5 Rapidly add logic blocks in sequence

Blocks are added by clicking an element then clicking in the drawing area, or by dragging and dropping the element onto the canvas. Blocks can be added rapidly in sequence, for example when you have inputs 1 to 10, without having to select the element each time.

1. In Engineer, click **File > Preferences**. The window opens.
2. Click the **Editor** entry.
3. Enable the **Repeat Symbol** check box.
4. Click the **Ok** button to save and exit from the window.
5. In the logic diagram, select an element, then click in the drawing area to add it, click again to add a second box, and so on.

4.4.1.6 Connect two logic diagrams

When the logic is complex and requires two sheets, for example, these two sheets can be connected. By connecting them, the logic is continuous from one sheet to the next.

1. In the first sheet, click the **I/O Tokens** tab.
2. Scroll to the bottom, and click and drag the **Tag Out** element to the sheet where the next sheet is to connect.
3. Double-click the element and in the window that opens, give it a name, such as "To Sheet 2" or "To IO Sheet 2."

Figure 4-81: Connecting sheet 1 to sheet 2

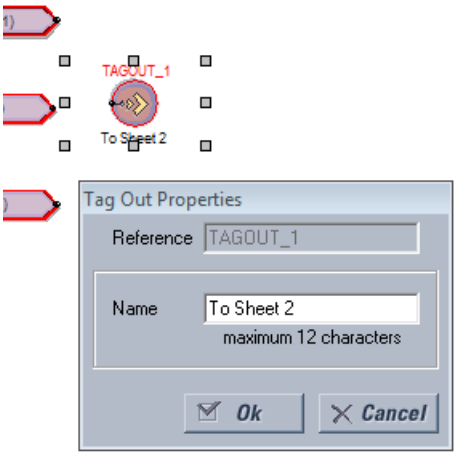

4. In the second sheet, click and drag the **Tag In** element to the sheet where the first sheet is to connect.
5. Double-click the element and in the window that opens, select the first sheet from the drop-down list to connect the two sheets.
6. Save the work.

4.4.1.7 Optimize the logic

The number of available FlexLogic entries depends on firmware, for example 515 or 1024 lines. The software can automatically optimize a logic diagram to reduce space and free up entries.

1. In Engineer, under **File > Preferences**, select the **Compiler** option. Ensure that the **Optimize Compiled Output** option is enabled.
2. Run the compiler again, for example by clicking the **Compile** button at the bottom left of the software. The results display in the Optimization Summary. Changes also display when the FlexLogic Equation Editor is accessed. The logic diagram does not change. In the example shown, no lines were saved to free up space.

Figure 4-82: Code optimization results

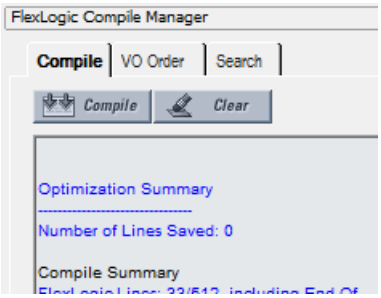

4.4.1.8 Change logic order

The order in which the FlexLogic is populated in the FlexLogic Equation Editor window depends on settings.

First, when automatic sorting is not enabled, the sequence in which the blocks were drawn is followed.

Second, the order in which equations are executed can be manually changed, as outlined here.

Third, automatic sorting can be set in preferences, as outlined here. It is enabled by default and means that an algorithm is implemented to give best results and quickest performance, For example, the block with the fastest execution time is entered first in the FlexLogic. When two block functions have the same execution time the block drawn first displays first in the FlexLogic. For example, drawing input 61 to output 61, then input 62 to output 62 causes the input/output 61 to be entered into the FlexLogic first. Automatic sorting takes precedence over manual sort; if you enable this option, manual sorting is not implemented.

To manually change logic order:

1. In the compile area, click the **VO Order** tab.
2. If the window is blank, click the **Refresh** button.
3. Select an entry and click the up or down arrow. To cancel any manual changes, click the **Sort** or **Refresh** button.
4. Recompile. The change is not executed or saved if automatic sorting is enabled.

Figure 4-83: Ordering FlexLogic entries

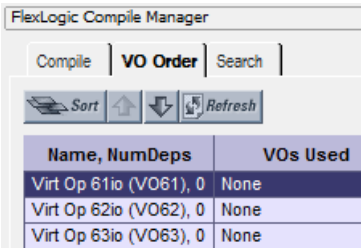

To set automatic sorting:

1. In Engineer, under **File > Preferences**, select the **Compiler** option. The **Automatically Sort VOs** option means that the block with the fastest execution time is entered first in the FlexLogic. When two block functions have the same execution time the block drawn first displays first in the FlexLogic. For example, drawing input 61 to output 61, then input 62 to output 62 causes the input/output 61 to be entered into the FlexLogic first.

4.4.1.9 Search logic

Items that can be searched in a logic diagram include gates, Input, Contact Input, Contact Output, Timer, Virtual Output, Tag In, Tag Out, and User-programmable LED. A search can be performed while designing or monitoring.

1. In the compiler area of Engineer, click the **Search** tab.
2. Use one of the following methods to set search criteria:
   - Select an element from the first drop-down list. Results display automatically.
   - Type in the second text string box, or select any of the 32 previous searches from the drop-down list. Click the **Search** button. Any results display.

   The search applies to all tabs, not just the active tab.
3. Double-click a search result to view the item.

Figure 4-84: Search function

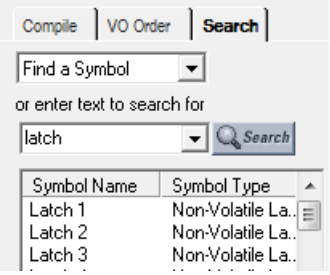

NOTE

You can also select an element from the drop-down list on the toolbar. It is then highlighted in the logic diagram.

4.4.1.10 Exclude sheet from compile

While designing the FlexLogic equations, entire sheets can be removed from the compile logic. This allows the user to test various schemes by placing schemes on separate sheets and including either sheet at compile time.

1. In the Logic Designer window, right-click the tab and select the **Exclude from Compile** option so that the check mark displays. When sheets are excluded, a message displays with each compile that "excluded sheets will not be reflected in the RPN." An excluded sheet is denoted with end brackets, similar to < Sheet 1 >.

Figure 4-85: Excluding a tab from compiling

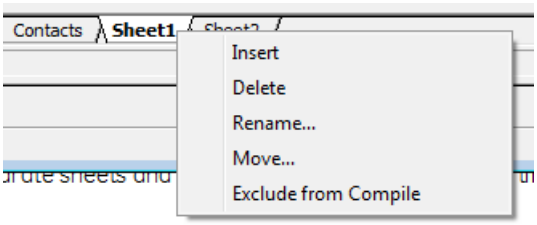

Figure 4-86: Tab excluded from compiling

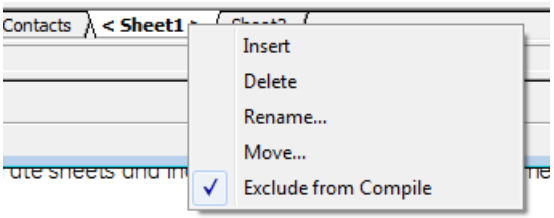

4.4.2 Send file to and from device

With the logic diagram created, compiled, and errors eliminated, the FlexLogic can be sent to a live device. And, conversely, a file from a live device can be added to the Offline Window area for additional work.

To send a file to a device:

1. In the Offline Window area of the software, right-click the device name and select the **Write Settings to Device** option. A prompt can appear that the URS file has been repaired; acknowledge the message.
2. When a window opens, select the device to which you want to send the file, then click the **Send** button and confirm. The order codes and IEC 61850 edition must match. The file is sent to the live device. Any errors can be viewed in the log file at the prompt.

To import a file from a device:

1. Close all open files in Engineer that relate to the device, else a message displays to that effect, for example to close the FlexLogic view associated with the file. When the file is not associated with a live device, a message displays to that effect; you need to identify the device to which you want to send the file. The order codes must match.
2. Right-click the device in the Online Window area and select the **Add Device to Offline Window** option. After you enter a name for the file, it is written to the Offline Window area.

4.4.3 Monitor logic

After creating the logic diagram, validating it, and uploading the FlexLogic to a device, the results from the device can be viewed.

The following checks are performed automatically when switching from design to monitoring, and prompts display when necessary:

- Verify that the order code of the linked relay matches the settings file
- Verify that the version of the linked relay matches the settings file
- Verify that the FlexLogic Equation Editor of the linked relay matches the settings file. Solution: Compile the FlexLogic logic diagram and send the settings file to the relay.
- Verify that the FlexLogic Timers of the linked relay match the settings file. Solution: Compile the FlexLogic logic diagram and send the settings file to the relay.
- If the settings file contains a serial number lock, then verify that the serial number of the linked relay matches the settings file

To view results:

1. In the Offline Window area of the software, expand the **Engineer** entry for the device.
2. Double-click the **Logic Designer** entry and **Compile** the logic.
3. Double-click the **Logic Monitor** entry, or click the **M** button in the toolbar at the top of the window. With successful launch, the logic displays and a green indicator displays at the bottom of the tab.

   When the file is not associated with a live device, a message displays to that effect; you need to identify the device to which you want to send the file. The order codes must match between the Offline Window and the Online Window.

   When the device is offline, a message indicates problems communicating with the device.

   When the devices are not synchronized, a message indicates the FlexLogic does not match the settings file. To send the offline file to the device, right-click the device name and select the **Write Settings to Device** option.

   When the state of a symbol is OFF, the symbol is shown in the default color or no color.

   When a symbol's state changes to ON, the symbol and connection line turns green.

   The state of some symbols can either be unknown or the state transitions faster than the update interval. For these two cases, the state of the symbol is considered 'UNKNOWN' and the symbol is outlined in red.

   The colors for the ON and Unknown state can be customized in the Preferences.

   The figure shows that the software is communicating with devices (square green indicator) and that a minor error is present (green box outline). In this case, the battery is weak and needs to be replaced. This can be viewed as the Replace Battery message on the front panel of the device and in the EnerVista software under **Actual Values > Front Panel > Front Panel** or **Display/Keypad**.

Figure 4-87: Monitoring a device, with minor error caused by weak battery

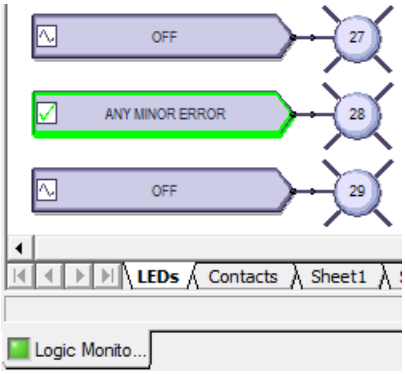

4

4.4.4 View front panel and print labels

This window displays the LEDs that are on the front panel. You can create labels and print them for the device. You do not use the window to add text labels and upload them to the device. Custom labelling is also outlined earlier in this chapter; see the Front Panel Labelling section.

To view the front panel:

1. In the Offline Window area of the software, expand the **Engineer** entry for the device.
2. Double-click the **Front Panel Report** entry. The report displays. The Device Summary is read from the settings file and cannot be changed. The LEDs and pushbuttons display below the summary.
3. To save the report, click **File > Save As**, enter a file name, and select the front panel report (FPR), JPG, or PDF format.

Figure 4-88: Front panel display in Engineer

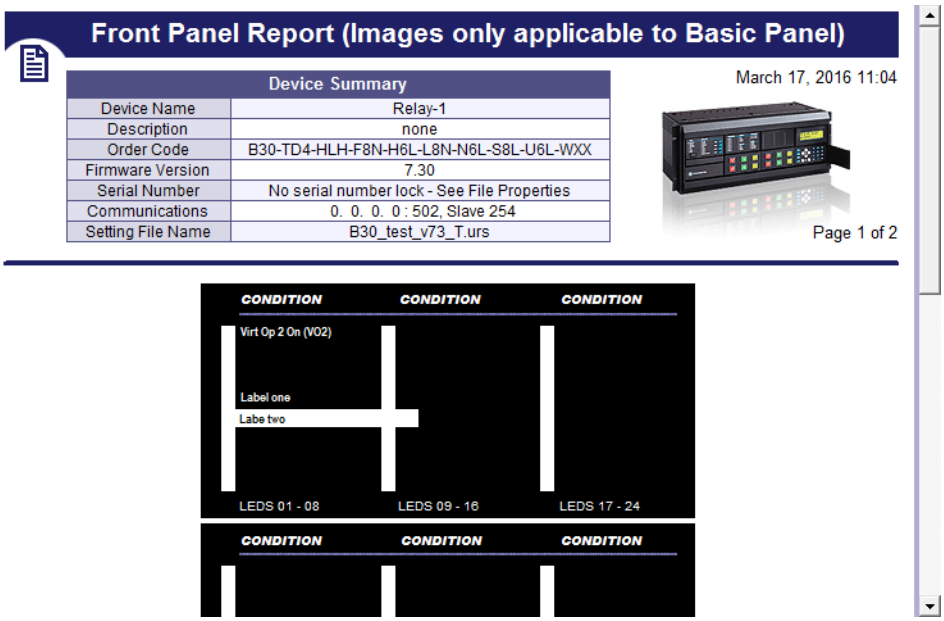

To print labels:

1. In the **Front Panel Report** window, double-click an LED or pushbutton and enter text.
2. To print the labels, click the **Print** icon on the toolbar.
3. To save the report and labels, click **File > Save As**, enter a file name, and select the FPR, JPG, or PDF format.
4. Use the instructions in the second tab of the window to add the labels to the physical device.

4.4.5 Generate connectivity report

This report displays basic information about a device, such as order code, port numbers, inputs and outputs. You can use it to create a PDF file of basic information. The report is based on CID and/or IID files, and not the system or full SCD. All device details including Remote Inputs, Remote Outputs, and Analog Inputs/Outputs are indicated, including quantities used and available.

To display a device report:

1. In the Offline Window area of the software, expand the **Engineer** entry for the device.
2. Double-click the **Device Connectivity Report** entry. The report displays.
3. To save as a PDF file, click **File > Save As**.

Figure 4-89: Device Connectivity Report

Device Connectivity Report

Device Information		
Filename / Device Name	**Order Code / Revision / Serial Nr.**	**File Details**
D30_test_v73.urs Relay-1	D30-U03-HLH-F8L-H6L 7.3x No serial number lock - See File Properties	Size: 2683 KB Last Modified Date: 15.11.2016 23:29:41 Path: D:\Users\ \Desktop\UR_Setting les\UR_Setting_files\D30_test_v73\

Device Details		
Physical Ports Available	**Port Settings**	**Services / Protocols**
RS232	RS232 Baud Rate: 115200	DNP 3.0
RS485	RS485 Baud Rate: 115200	IEC 60870-5-104
2 * 100BaseFX Eth, Multimode, SFP with LC	Port1 IP: 3. 94.244.210	IEC 61850
1 * 100BaseT Eth, Multimode, SFP with RJ-45	Port2 IP: 127. 0. 0. 1	EGD

4.4.6 Preferences

Preferences determine functionality. As such, you are encouraged to review them. This section outlines some options available in the menus and preference panels.

Access them in the **Logic Designer** panel under the **View** menu and under **File > Preferences**. The Logic Designer and Logic Monitor preferences are outlined here, not all preferences for a device.

4.4.6.1 View menu

View > Toolbar > Advanced Actions — Active when in Logic Designer. Toggles a toolbar to nudge, rotate, flip, or change the order of an element.

View > Show Unused Pins — Enable to display unconnected pins. Disable to eliminate unconnected pins from the view, for example when printing.

Figure 4-90: Unused pins on and off

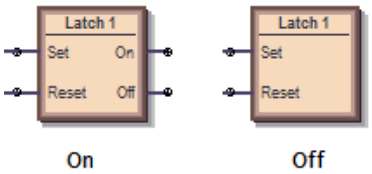

4.4.6.2 Logic designer

The path is **File > Preferences > Logic Designer**.

Workbook Setup

Size and Units

Size and Units — Changes the size of diagram area displayed in Engineer. If you set the size to be smaller than an existing logic diagram, the content is cut off.

WorkBook

Print Scale — The scale for logic diagram when printing. Scaling a large diagram to 200 percent, for example, results in the diagram being cut off.

Orphan Protection — When enabled, the printing output prevents Virtual Output circuits from spanning more than a single page. The largest Virtual Output circuit is scaled to fit on a single page and all remaining Virtual Output circuits are scaled so that all circuits are printed using the same scale.

Show Title Block — When enabled, places an information box at the bottom right of the diagram when printing. Enter the information in the **File Information** panel.

Show Sheet Name — When enabled, shows Sheet 1, Sheet 2, or any other name at the top of the logic diagram when printing.

Start Sheet On New Page — Places the sheet on the next page when printing.

Show Notes Selection — When other than None, prints the text from any information notes added to the document (under **Drawing Tools** tab > **Note**). The text is printed after the logic diagram.

File Information

The text entered here displays at the bottom right of a diagram when printing, provided that the **Show Title Block** option is enabled. Note the option to change the logo from the GE logo to your company logo.

Display

The panel sets how the element boxes display. The figure shows how an AND gate displays when the UR default, IEC, or ISO symbol type is selected.

Figure 4-91: AND gate varies by standard selected

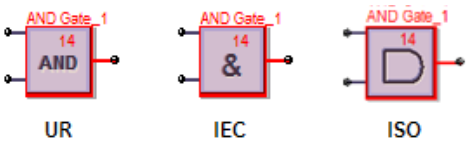

Symbol Style — IEC, ISO, UR Setup — Sets how the gates display in the logic diagram.

Symbol Color — When set to Black & White, only logic blocks with issues continue to display red.

Zoom Operation — Determines what happens when the **View > Zoom** functions are used. When set to Sheet Only and the zoom is changed, the single tab changes. When set to Workbook, all tabs change.

Editor

Repeat Symbol — Enable this feature to add element blocks rapidly in sequence, for example when you have inputs 1 to 10, without having to select the element each time. Select the element block from the toolbox, click the diagram, then continue to click to add additional blocks.

Use first available VO / Timer — When enabled and you copy and paste a virtual output or timer element, the numbering continues in sequence. For example, you copy timer 5 and paste it as timer 6. When disabled and you copy and paste a virtual output or timer element, the same number is used. For example, you copy timer 5 and paste it as timer 5.

Auto-Save Logic Designer every x minutes — Logic diagrams with changes are saved automatically according to this interval. The range is 5 minutes (default) to 30 minutes. With auto-save, the file extension of the saved file is .auto. This file remains until you save the file manually.

Auto Populate

These options work in the **Edit > Auto Populate Workbook** function.

VOs per Worksheet — When an existing settings file is opened in the Logic Designer, the Logic Designer populates the canvas and attempts to evenly distribute the Virtual Output circuits across multiple sheets. A value of 100 in this setting places all FlexLogic equations on a single sheet until there are 100, then the next ones are placed on another sheet. A value of 1 places each Virtual Output circuit on a separate sheet.

Show / FlexLogic Merge / Show Unused — If Show Contact Outputs and Show LEDs are selected, for example, the function places Contact Output and User-programmable LED symbols for settings that are configured. If you disable the LED check boxes, then the LED tab/sheet does not display when you next open the Logic Designer window. The settings apply to all products, not just the active window when it is next opened. Close then reopen the Logic Designer window for the setting to take effect.

Compiler

Show Warnings — Options to filter the messages that display when logic compiles.

Minor — Enable to display minor errors. An example is using the default values of an element added to the diagram, such as the name of the element. An example is "Warning: Virtual output xx using default name," for which you simply click into the element to rename it.

Major — Enable to display major errors. Examples are an input that does not have a corresponding output, using disabled features, and failing to connect a symbol. Fix these errors.

Setting — Enable to display error message related to settings, such as an improperly configured setting, such as using ON or OFF.

Automatically Sort VOs — When enabled, the logic is compiled with an algorithm to give best results and quickest performance, for example the fastest logic first. The fastest logic displays in the FlexLogic Equation Editor output as the first entries in the table. Use sorting when virtual outputs have dependencies on other virtual outputs. This setting takes precedence over order set manually in the **VO Order** tab in the compiler.
When disabled, the sequence in which the blocks were drawn is followed.

Optimize Compiled Output — With this option enabled, the software automatically optimizes a logic diagram to reduce space and free up FlexLogic entries. Run the compiler again, for example by clicking the **Compile** button at the bottom left of the software. The number of saved lines displays in the Optimization Summary. Changes also display when the FlexLogic Equation Editor is accessed. The logic diagram does not change.

4.4.6.3 Logic monitor

Display

The software displays the color specified when an element is on. There is no color when the element is off.

The software displays another color when the status cannot be determined and is unknown.

Timing

Timing Information can be displayed in the monitoring window. This timing information is only an approximate representation of how Engineer sees transitions. Use the device's Event Record to view accurate timing information.

The timing information can also be streamed to a comma-separated values (CSV) spreadsheet.

The timing information displayed and recorded can be filtered based on six categories. If a category is not selected, any timing information related to that category does not display and is not recorded to the CSV file.

Show Timing Information in Output Window — Enable to display times in the monitoring window.

Because of the update rate of the Logic Monitoring, the timing information cannot be used as an accurate representation of the events that occur within the relay. Use instead the device's event record. Timing information can be delayed by 30 seconds.

Save Timing Information to CSV File — Enable to write timing information in a spreadsheet. The timing information is recorded in a text file that uses commas to separate each of the fields. This file uses the extension CSV that is supported by any spreadsheet application.

Every change written to the CSV file requires a timestamp.

The format for the timing information in the output window is as follows:

yyyy/mm/dd hh:dd:ss
  devicename offline
yyyy/mm/dd hh:dd:ss
  devicename ONLINE
yyyy/mm/dd hh:dd:ss
  VO1: Virt Out 1- 0
  VI4: Virt In 4- 1
  DI3: Direct In 3- 0
  RI2: Remote In 2- 1
  H5a: Contact In 1- 1
  H1: Contact Output 1- 0

Data is only appended to the CSV file. The format for the data is as follows:

yyyy/mm/dd hh:dd:ss, devicename, offline
yyyy/mm/dd hh:dd:ss, devicename, ONLINE
yyyy/mm/dd hh:dd:ss, VO1: Virt Out 1, 0
yyyy/mm/dd hh:dd:ss, VI4: Virt In 4, 1
yyyy/mm/dd hh:dd:ss, DI3: Direct In 3, 0
yyyy/mm/dd hh:dd:ss, RI2: Remote In 2, 1
yyyy/mm/dd hh:dd:ss, H5a: Contact In 1, 1
yyyy/mm/dd hh:dd:ss, H1: Contact Output 1, 0

Options display for filtering, such as recording timing for Virtual Inputs and Outputs, but not Communications Status.

4.4.6.4 COMTRADE waveforms

Waveform files are viewable in the EnerVista software. The preferences are unrelated to Engineer and are outlined in the UR Family Communications Guide.

4.4.7 Toolbars

These are toggled in the **View > Toolbar** menu.

The UR symbols are displayed for the toolbox icons. They change when the default setting is changed to IEC or ISO symbols. The symbols displayed in the toolbox also vary by firmware version, reflecting what is supported for each release.

4.4.7.1 FlexLogic Editor toolbar

	New Device	Create a new settings file

	Open File	Open an existing settings file in the URS, CID, or IID format
	Save FlexLogic	Save the Logic Designer diagram
	PDF Report	Create a PDF document from Logic Designer diagram(s). Settings can be changed under **File > Preferences > Workbook Setup**.
	Toggle Compile Window	Display or hide the compile window area
	Sort Order	Select to change the sort order of the Virtual Output list to the right of the icon. Virtual Outputs can be sorted numerically in ascending and descending order based on numbers and names.
Select VO to View (1-96)	Select VO to View (x - x)	Select a Virtual Output to locate and select it in the workbook. Each Virtual Output listed also contains the name of the sheet where the Virtual Output is located.
	Edit Mode Logic Designer	Switch to Logic Designer mode
	Monitor Mode Logic Monitor	Switch to Logic Monitor mode
	Turn On ALL Communications	Turn on all communications to all Logic Designer diagrams that are in the monitoring mode. Default upon each launch of Engineer.
	Turn Off All Communications	Turn off all communications to all Logic Designer diagrams that are in the monitoring mode. This is a legacy function for serial communication to turn off communication to devices. Turning off communication applies to the current session only. When you re-launch the EnerVista software, communication is on by default.

4

4.4.7.2 Token Toolbox

Drawing Tools

Line	Draw a line. Click and drag to draw.
Polyline	Draw multiple joined lines. Click and drag for each line. Double-click to finish.
Polygon	Draw multi-sided object. Click for each line. Double-click to finish.
Rectangle	Draw four-sided object. Click and drag to draw.
Polycurve	Draw multiple curves. Click for each line. Double-click to finish.
Closed Curve	Draw multiple, closed curves. Click for each line. Double-click to finish.

Ellipse	Draw oval or circle. Click and drag to draw.
Text	Add text box with rectangle around it. Click to add. Double-click it to change text.
Image	Add figure. Select file in the window that opens, then click on diagram canvas to add figure.
Note	Add note icon and text. Click to add. Double-click to edit the title and text.

I/O Tokens

These are parts used in FlexLogic equations. They are the inputs and outputs of the Virtual Output equations. The display can vary from that shown here.

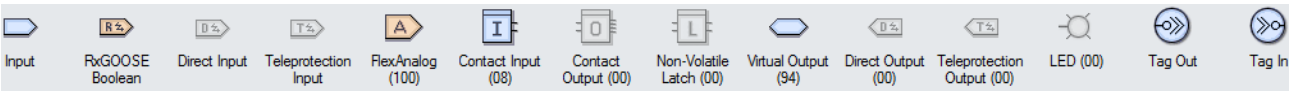

Input	Input symbol that can be configured to any FlexLogic operand value
RxGOOSE Boolean	Remote inputs from other devices
Direct Input	Input from another UR device. Teleprotection inputs/outputs and direct inputs/outputs are mutually exclusive and cannot be used simultaneously.
Teleprotection Input	Teleprotection inputs/outputs and direct inputs/outputs are mutually exclusive and cannot be used simultaneously.
FlexAnalog (100)	FlexAnalog symbol that can be used as the input to a FlexElement or use the FlexAnalog symbol to monitor an actual value when in logic Monitoring mode
Contact Input (24)	Contact Input Gate is similar to the Input symbol but is restricted to the operands associated with a Contact Input
Contact Output (00)	Contact Output Gate is similar to the Input symbol but is restricted to the operands associated with a Contact Output. The Operate and Seal-In settings can be configured graphically.

Non-Volatile Latch (00)	The Non-Volatile Latch is similar to the Input symbol but is restricted to the operands associated with a Non-Volatile Latch. The Set and Reset settings can be configured graphically.
Virtual Output (96)	The final output of an equation is a numbered register called a virtual output. Virtual outputs can be used as an input operand in any equation, including the equation that generates the output, as a seal-in or other type of feedback.
Remote Output (00)	Place and configure a Remote Output. The UR's order code and firmware version then determine the availability of the Remote Output.
Direct Output (00)	Place and configure a Direct Output. The UR's order code and firmware version then determine the availability of the Direct Output to another UR device.
Teleprotection Output (00)	Place and configure a Teleprotection Output. The UR's order code and firmware version then determine the availability of the Teleprotection Output.
LED (00)	Place a User Programmable LED in the Logic Designer diagram. Not applicable when using a graphical front panel.
Tag Out	A Tag Out can be used in 1 of 2 ways. The first use of the Tag Out is to break up logic that needs to span several sheets. The second use of the Tag Out is to associate a frequently used block of code with the Tag Out and then repeatedly use the same block of code using a Tag In. When a Tag Out is referenced more than once, the Tag Out is replaced with a Virtual Output during the compile phase.
Tag In	Tag-In can is used to reference an existing Tag-Out. It joins another diagram to a previous diagram.

Boolean Tokens

These symbols are used to create FlexLogic Equations. Use them as intermediate logic for the Virtual Output equations. The display can vary from that shown here.

OR Gate	Place an OR gate in the Logic Designer diagram. Only one action needs to occur. Any function input on the left side satisfies the condition. The number of inputs is configurable from two to 16.
AND Gate	Place an AND gate in the Logic Designer diagram. Multiple actions need to occur. All functions input on the left side are required to satisfy the condition. The number of inputs is configurable from two to 16.
NOR Gate	Place a NOR gate in the Logic Designer diagram. Gives the value of one when all input operands have a value of zero and otherwise gives a value of zero. It gives an output signal when there are no input signals. An inverter that reverses the logic state. The number of inputs is configurable from two to 16.

NAND Gate	Place a NAND gate in the Logic Designer diagram. Gives the value of zero when all input operands have a value of one and otherwise gives a value of one. It gives an output signal until all signals are present on its inputs. An inverter that reverses the logic state. The number of inputs is configurable from two to 16.
XOR Gate	Place a XOR gate in the Logic Designer diagram, which is two exclusive OR gates. Only one action needs to occur. If there are two inputs or there is no input, there is no output.
NOT Gate	Place a NOT gate in the Logic Designer diagram. Gives the value of one when the input operand has a value of zero and otherwise gives a value of zero. It gives an output signal when there is no input signal. An inverter that reverses the logic state.
Latch	Place a latch in the Logic Designer diagram. A latch has two inputs and one output. One input is the Set input, and other input is the Reset input.
Positive One Shot	Place a positive one shot symbol that responds to a positive going edge in the Logic Designer diagram. A "one shot" is a single input gate that generates a pulse ins response to an edge on the input.
Negative One Shot	Place a negative one shot symbol that responds to a negative going edge in the Logic Designer diagram
Dual One Shot	Place a positive one shot and a negative one shot symbol in the Logic Designer diagram
Timer (32)	Place a timer in the Logic Designer diagram

Elements

These blocks configure properties of the element or use element operands as input to FlexLogic equations.

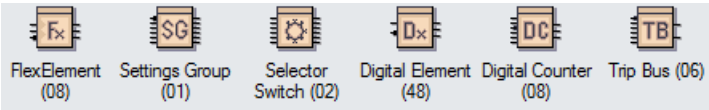

FlexElement (08)	Place and configure a FlexElement. A FlexElement is a universal comparator used to monitor any analog actual value calculated by the relay or a net difference of any two analog actual values of the same type.
Settings Group (01)	Place and configure the Settings Group settings
Selector Switch (02)	Place and configure a Selector Switch element. Firmware version determines feature availability. The Selector Switch element is intended to replace a mechanical selector switch. Typical applications include setting group control or control of multiple logic sub-circuits in user-programmable logic. The element provides for two control inputs.

Digital Element (48)	Place and configure a Digital Element. A Digital Element can monitor any FlexLogic operand and present a target message and/or enable events recording depending on the output operand state.
Digital Counter (08)	Place and configure a Digital Counter element. A Digital Counter counts the number of state transitions from Logic 0 to Logic 1. The counter is used to count operations such as the pickups of an element.

4.4.7.3 Basic Actions toolbar

	Select	Select components. Click one component and hold down the **CTRL** key to select others. Or click and drag an area that contains multiple components to select.
	Edit Vertices	Shows vertices points for the component selected (if the component support vertices manipulation)
	Properties	Shows the properties of the selected component
	Zoom Normal	Zoom in and center the screen to the spot selected
	Zoom to Fit	Zoom in to a magnitude that fits your entire schema layout on your entire screen
	Zoom Custom	Zoom in on the components that you have selected
	Pan	Move the viewable area of your screen around the schema. To activate, select this tool and then place the hand icon over and part of your schema. Click and drag the hand in a direction to move around the schema.
	Align Top, Middle, Bottom	Align the selected components to the top, middle, or bottom of the reference component
	Align Left, Center, Right	Align the selected components to the left, middle, or right of the reference component
	Space Across	Evenly space the selected components across a horizontal axis, starting from the far left component and ending at the far right component
	Space Down	Evenly space the selected components across a vertical axis, starting from the top component and ending at the bottom component
	Same Width	Set the width of the selected components to the same width as the reference component
	Same Height	Set the height of the selected components to the same height as the reference component
	Same Size	Set the width and height of the selected components to the same width and height of the reference component

4.4.7.4 Advanced Actions toolbar

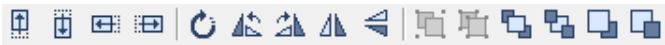

Only basic objects (lines, rectangles, ellipses) can be rotated and flipped.

Only objects from the Drawing Toolbar can be structured (grouped, ungrouped, forward, backward).

	Nudge Up, Down, Left, Right	Moves selected component one pixel upward, downward, left, right

	Rotate	Rotates selected component freely. Once selected, put your mouse cursor over the component and move the component clockwise or counter-clockwise depending on what you need.
	Rotate Left, Right	Rotates selected component 90 degrees counter-clockwise or clockwise
	Flip Vertical	Flips the selected component on the vertical axis
	Flip Horizontal	Flips the selected component on the horizontal axis
	Group, Ungroup	Combines all selected components into one combined entity. Ungroups them into separate components.
	Front, Back	Moves current components to the absolute front or back of all viewable layers
	Forward, Backward	Moves current components on layer higher or lower than its original layer hierarchy

C70 Capacitor Bank Protection and Control System

Chapter 5: Settings

This chapter outlines front panel and/or software settings. The relay is not taken out of service when saving settings; the relay is taken out of service when a settings file is written to it.

Settings can be viewed remotely in a web browser by entering the IP address of the relay, accessing the **Device Information Menu** option, then the **Front-Panel Display Report** option.

When indicated that a restart is required for a setting change to take effect, use the **Maintenance > Reboot Relay Command** in the software.

Settings file conversion from previous firmware versions is supported. See the Maintenance chapter.

5.1 Settings menu

■■ SETTINGS ■■ PRODUCT SETUP	⇔ ■ SECURITY ■	See page 5-7
⇩	⇕ ■ DISPLAY ■ PROPERTIES	See page 5-26
	⇕ ■ GRAPHICAL FRONT PANEL ■	Access in EnerVista See page 5-28
	⇕ ■ CLEAR RELAY ■ RECORDS	See page 5-41
	⇕ ■ COMMUNICATIONS ■	See page 5-41
	⇕ ■ MODBUS USER MAP ■	See page 5-111
	⇕ ■ REAL TIME ■ CLOCK	See page 5-112
	⇕ ■ USER-PROGRAMMABLE ■ FAULT REPORT	See page 5-117
	⇕ ■ OSCILLOGRAPHY ■	See page 5-118

5

	⇕	■ DATA LOGGER ■	See page 5-120
	⇕	■ USER-PROGRAMMABLE ■ LEDS	See page 5-122
	⇕	■ USER-PROGRAMMABLE ■ SELF TESTS	See page 5-126
	⇕	■ CONTROL ■ PUSHBUTTONS	See page 5-127
	⇕	■ USER-PROGRAMMABLE ■ PUSHBUTTONS	See page 5-129
	⇕	■ FLEX STATE ■ PARAMETERS	See page 5-135
	⇕	■ USER-DEFINABLE ■ DISPLAYS	See page 5-136
	⇕	■ DIRECT I/O ■	See page 5-138
	⇕	■ TELEPROTECTION ■	See page 5-144
⇧	⇧	■ INSTALLATION ■	See page 5-145
■■ REMOTE RESOURCES ■■	⇔	■ ■	Access in EnerVista See page 5-146
■■ SETTINGS ■■ SYSTEM SETUP	⇔	■ AC INPUTS ■	See page 5-147
⇩	⇕	■ POWER SYSTEM ■	See page 5-148
	⇕	■ SIGNAL SOURCES ■	See page 5-149
	⇕	■ BREAKERS ■	See page 5-154
	⇕	■ SWITCHES ■	See page 5-159
⇧	⇧	■ FLEXCURVES ■	See page 5-165
■■ PROCESS BUS ■■ MODULE	⇔	■ GENERAL ■	See page 5-172
⇩	⇕	■ PBM PTP ■	See page 5-177
⇧	⇧	■ SV STREAM CONFIG ■	Access in EnerVista See page 5-180
■■ SETTINGS ■■ FLEXLOGIC	⇔	■ FLEXLOGIC ■ EQUATION EDITOR	See page 5-215
⇩	⇕	■ FLEXLOGIC ■ TIMERS	See page 5-215
	⇕	■ FLEXELEMENTS ■	See page 5-215
⇧	⇧	■ NON-VOLATILE ■ LATCHES	See page 5-219

■■ SETTINGS ■■ GROUPED ELEMENTS	⇔	■ SETTING GROUP 1 ■	See page 5-220
⇩	⇕	■ SETTING GROUP 2 ■	
	⇕	■ SETTING GROUP 3 ■	
	⇕	■ SETTING GROUP 4 ■	
	⇕	■ SETTING GROUP 5 ■	
⇧	⇧	■ SETTING GROUP 6 ■	
■■ SETTINGS ■■ CONTROL ELEMENTS	⇔	■ TRIP BUS ■	See page 5-283
⇩	⇕	■ SETTING GROUPS ■	See page 5-285
	⇕	■ SELECTOR SWITCH ■	See page 5-287
	⇕	■ CAPACITOR CONTROL ■	See page 5-294
	⇕	■ TIME OF DAY TIMERS ■	See page 5-299
	⇕	■ AUTOMATIC VOLTAGE ■ REGULATOR	See page 5-300
	⇕	■ DIGITAL ELEMENTS ■	See page 5-304
	⇕	■ DIGITAL COUNTERS ■	See page 5-307
⇧	⇧	■ MONITORING ■ ELEMENTS	See page 5-309
■■ SETTINGS ■■ INPUTS / OUTPUTS	⇔	■ CONTACT INPUTS ■	See page 5-325
⇩	⇕	■ VIRTUAL INPUTS ■	See page 5-327
	⇕	■ CONTACT OUTPUTS ■	See page 5-328
	⇕	■ VIRTUAL OUTPUTS ■	See page 5-331
	⇕	■ RESETTING ■	See page 5-332
	⇕	■ DIRECT INPUTS ■	See page 5-333
⇧	⇧	■ DIRECT OUTPUTS ■	See page 5-333
■■ SETTINGS ■■ TRANSDUCER I/O	⇔	■ DCMA INPUTS ■	See page 5-338
⇩	⇕	■ RTD INPUTS ■	See page 5-339

⇧	⇧	■ DCMA OUTPUTS ■	See page 5-340
■■ SETTINGS ■■ TESTING	⇔	■ IED MODE CONFIG ■	See page 5-344
⇩	⇧	■ FORCE CONTACT ■ INPUTS	See page 5-347
⇧	⇧	■ FORCE CONTACT ■ OUTPUTS	See page 5-348
■■ SETTINGS ■■ SIMULATION	⇔	■ SUBSCRIBE TO ■ SIMULATED VALUES	See page 5-348
	⇧	■ PUBLISH ■ SIMULATED VALUES	See page 5-350

5.2 Overview

5.2.1 Introduction to elements

For URs, the term *element* is used to describe a feature that is based around a comparator. The comparator is provided with an input (or set of inputs) that is tested against a programmed setting (or group of settings) to determine if the input is within the defined range that sets the output to logic 1, also referred to as *setting the flag*. A single comparator can make multiple tests and provide multiple outputs. For example, the time overcurrent comparator sets a pickup flag when the current input is above the setting and sets an operate flag when the input current has been at a level above the pickup setting for the time specified by the time-current curve settings. All comparators use analog actual values as the input.

5

NOTE

An exception to this rule is digital elements, which use logic states as inputs.

Elements are arranged into two classes, *grouped* and *control*. Each element classed as a grouped element is provided with six alternate sets of settings, in setting groups numbered 1 through 6. The performance of a grouped element is defined by the setting group that is active at a given time. The performance of a control element is independent of the selected active setting group.

The main characteristics of an element are shown on a logic diagram. This includes the inputs, settings, fixed logic, and the output operands generated. The previous chapter explains how to read a logic diagram, and the abbreviations used in a diagram are defined in the Abbreviations chapter.

Some settings are specified in per-unit (pu) calculated quantities:

pu quantity = (actual quantity) / (base quantity)

Where the current source is from a single current transformer (CT), the *base quantity* is the nominal secondary or primary current of the CT. Use the secondary current base to convert per-unit settings to/from a secondary current value, and use the primary current base to convert to/from a primary current value.

Where the current source is the sum of two or more CTs with different nominal primary current, the primary base quantity is the largest nominal primary current. For example, if CT1 = 300 / 5 A and CT2 = 100 / 1 A, then in order to sum these, CT2 is scaled to the CT1 ratio. In this case, the base quantity is 300 A primary, 5 A secondary for CT1, and 300/(100/1) = 3 A secondary for CT2.

For voltage elements, the primary base quantity is the nominal phase-to-phase primary voltage of the protected system provided that the VT ratio setting is set to the nominal ratio of the VTs and the secondary voltage setting is set to the phase-to-phase voltage seen by the relay when the voltage of the protected system in nominal. The UR uses the convention that nominal voltages in a three-phase system are phase-to-phase voltages.

For example, on a system with a 13.8 kV nominal primary voltage, the base quantity is 13800 V. With 14400:120 V delta-connected VTs, the secondary base quantity and secondary voltage setting is:

$$\frac{13800}{14400} \times 120 = 115 \text{ V} \qquad \textbf{Eq. 5-1}$$

For wye-connected VTs, the primary and secondary base quantities are as before, but the secondary voltage setting (here a phase-to-ground value) is:

$$\frac{13800}{14400} \times \frac{120}{\sqrt{3}} = 66.4 \text{ V} \qquad \textbf{Eq. 5-2}$$

Some settings are common to many elements, outlined as follows:

- **FUNCTION setting** — This setting programs the element to operate when selected as “Enabled.” The factory default is “Disabled.” Once “Enabled,” any element associated with the function becomes active and all options become available.
- **NAME setting** — This setting is used to uniquely identify the element.
- **SOURCE setting** — This setting is used to select the AC source to be monitored. See the Introduction to AC Sources section later.
- **PICKUP setting** — For simple elements, this setting is used to program the level of the measured parameter above or below which the pickup state is established. In more complex elements, a set of settings can be provided to define the range of the measured parameters that cause the element to pick up.
- **PICKUP DELAY setting** — This setting sets a time-delay-on-pickup, or on-delay, for the duration between the pickup and operate output states.
- **RESET DELAY setting** — This setting is used to set a time-delay-on-dropout, or off-delay, for the duration between the operate output state and the return to logic 0 after the input transits outside the defined pickup range.
- **BLOCK setting** — The default output operand state of all comparators is a logic 0 or “flag not set.” The comparator remains in this default state until a logic 1 is asserted at the RUN input, allowing the test to be performed. If the RUN input changes to logic 0 at any time, the comparator returns to the default state. The RUN input is used to supervise the comparator. The BLOCK input is used as one of the inputs to RUN control.
- **TARGET setting** — This setting is used to define the operation of an element target message. When set to "Disabled," no target message or illumination of a front panel LED indicator is issued upon operation of the element. When set to “Self-Reset,” the target message and LED indication follow the operate state of the element and self-resets once the operate element condition clears. When set to “Latched,” the target message and LED indication remains visible after the element output returns to logic 0 until a RESET command is received by the relay.
- **EVENTS setting** — This setting is used to control whether the pickup, dropout, or operate states are recorded by the event recorder. When set to “Disabled,” element pickup, dropout, or operate are not recorded as events. When set to “Enabled,” events are created for

  <Element> PKP (pickup)
  <Element> DPO (dropout)
  <Element> OP (operate)

  The DPO event is created when the measure and decide comparator output transits from the pickup state (logic 1) to the dropout state (logic 0). This can happen when the element is in the operate state if the reset delay time is not zero.

  Not every operand of a given element in a UR relay generates events, only the major output operands. Elements, asserting output per phase, log operating phase output only, without asserting the common three-phase operand event.

5.2.2 Introduction to AC sources

5.2.2.1 Background

A mechanism called a *source* configures the routing of CT and VT input channels to measurement sub-systems. Sources, in the context of UR series relays, refer to the logical grouping of current and voltage signals such that one source contains all the signals required to measure the load or fault in a particular power apparatus. A given source can contain all or some of the following signals: three-phase currents, single-phase ground current, three-phase voltages, and an auxiliary voltage from a single VT for checking for synchronism.

The basic idea of an AC source is to select a point on the power system where the voltages and currents are of interest. To illustrate the concept of sources, as applied to current inputs only, consider the breaker-and-a-half scheme that follows. (The breaker-and-a-half scheme is used for illustrative purposes and is available on select UR products.) In this application, the current flows as shown by the arrows. Some current flows through the upper bus bar to some other location or power equipment, and some current flows into transformer winding 1. The current into winding 1 is the phasor sum (or difference) of the currents in CT1 and CT2 (whether the sum or difference is used depends on the relative polarity of the CT connections). The same considerations apply to transformer winding 2. The protection elements require access to the net current for transformer protection, but some elements can need access to the individual currents from CT1 and CT2.

Figure 5-1: Breaker-and-a-half scheme

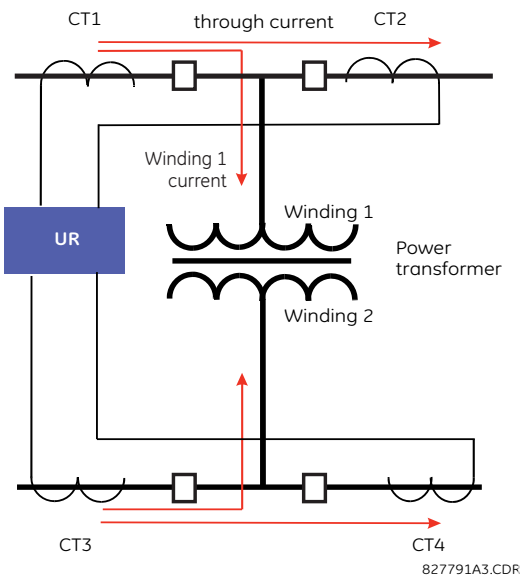

In conventional analog or electronic relays, the sum of the currents is obtained from an appropriate external connection of all CTs through which any portion of the current for the element being protected can flow. Auxiliary CTs are required to perform ratio matching if the ratios of the primary CTs to be summed are not identical. In the UR series of relays, provisions have been included for all the current signals to be brought to the UR device where grouping, ratio correction, and summation are applied internally via configuration settings.

A major advantage of using internal summation is that the individual currents are available to the protection device, for example as additional information to calculate a restraint current, or to allow the provision of additional protection features that operate on the individual currents, such as breaker failure.

Given the flexibility of this approach, it becomes necessary to add configuration settings to the platform to allow the user to select which sets of CT inputs are to be added to form the net current into the protected device.

The internal grouping of current and voltage signals forms an AC source. This source can be given a specific name through the settings and becomes available to protection and metering elements in the UR platform. Individual names can be given to each source to help identify them for later use. For example, in the scheme shown in the preceding figure, the user configures one source to be the sum of CT1 and CT2 and can name this source as “Wdg1 I.”

Once the sources have been configured, the user has them available as selections for the choice of input signal for the protection elements and as metered quantities.

5.2.2.2 CT/VT module configuration

CT and voltage transformer (VT) input channels are contained in CT/VT modules. The type of input channel can be phase/neutral/other voltage, phase/ground current, or sensitive ground current. The CT/VT modules calculate total waveform RMS levels, fundamental frequency phasors, symmetrical components, and harmonics for voltage or current, as allowed by the hardware in each channel. These modules can calculate other parameters as directed by the CPU module.

A CT/VT module contains up to eight input channels, numbered 1 through 8. The channel numbering corresponds to the module terminal numbering 1 through 8 and is arranged as follows. Channels 1, 2, 3, and 4 are always provided as a group, hereafter called a "bank," and all four are either current or voltage, as are channels 5, 6, 7, and 8. Channels 1, 2, 3 and 5, 6, 7 are arranged as phase A, B, and C respectively. Channels 4 and 8 are either another current or voltage.

Banks are ordered sequentially from the block of lower-numbered channels to the block of higher-numbered channels, and from the CT/VT module with the lowest slot position letter to the module with the highest slot position letter, as follows.

Increasing slot position letter -->		
CT/VT module 1	**CT/VT module 2**	**CT/VT module 3**
< bank 1 >	< bank 3 >	< bank 5 >
< bank 2 >	< bank 4 >	< bank 6 >

The UR platform allows for a maximum of six sets of three-phase voltages and six sets of three-phase currents. The result of these restrictions leads to the maximum number of CT/VT modules in a chassis to three. The maximum number of sources is six. A summary of CT/VT module configurations is as follows.

Item	**Maximum number**
CT/VT Module	3
CT Bank (3 phase channels, 1 ground channel)	6
VT Bank (3 phase channels, 1 auxiliary channel)	6

5.2.2.3 CT/VT input channel configuration

Upon relay startup, configuration settings for every bank of current or voltage input channels in the relay are generated automatically from the order code. Within each bank, a channel identification label is assigned automatically to each bank of channels in a given product. The *bank* naming convention is based on the physical location of the channels, required by the user to know how to connect the relay to external circuits. Bank identification consists of the letter designation of the slot in which the CT/VT module is mounted as the first character, followed by numbers indicating the channel, either 1 or 5. See the HardFiber instruction manual for designations of HardFiber voltage and current banks.

For three-phase channel sets, the number of the lowest numbered channel identifies the set. For example, F1 represents the three-phase channel set of F1/F2/F3, where F is the slot letter and 1 is the first channel of the three channels.

Upon startup, the CPU configures the settings required to characterize the current and voltage inputs, and it displays them in the appropriate section in the sequence of the banks (as described earlier) as follows for a maximum configuration: F1, F5, M1, M5, U1, and U5.

5.3 Product setup

5.3.1 Security

5.3.1.1 Security overview

The following security features are available:

- Password security — Basic security present by default

- EnerVista security — Role-based access to various EnerVista software screens and configuration elements. The feature is present by default in the EnerVista software.
- CyberSentry security — Advanced security available using a software option. When purchased, the option is enabled automatically, and the default Password security and EnerVista security are disabled.

Lost password

If all passwords are lost, recovery is possible by resetting the unit to default values. Note that the relay is reset to default values, not just the passwords.

To reset the unit after a lost password:

1. Email GE customer service at multilin.tech@ge.com with the serial number and using a recognizable corporate email account. Customer service provides a code to reset the relay to the factory defaults.
2. Enter the reset code on the front panel, under **COMMANDS ⇨⇩ RELAY MAINTENANCE ⇨ SERVICE COMMAND**.
3. Change the default password of ChangeMe1# as outlined in the Set Up CyberSentry and Change Default Password section at the end of the Installation chapter.

Password requirements

A user account requires an alpha-numeric password that meets the following requirements:

- Password is case-sensitive
- Password cannot contain the user account name or parts of the user account that exceed two consecutive characters
- Password must be 8 to 20 characters in length
- Password must contain characters from all of the following categories:
  - English uppercase characters (A through Z)
  - English lowercase characters (a through z)
  - Base 10 digits (0 through 9)
  - Non-alphabetic characters (for example, ~, !, @, #, $,%, &)

5

5.3.1.2 Password security

SETTINGS ⇨ PRODUCT SETUP ⇨ SECURITY

■ SECURITY ■	⇔	ACCESS LEVEL: Restricted	Range: Restricted, Command, Setting, Factory Service (for factory use only)
	⇩	■ CHANGE LOCAL ■ PASSWORDS	See page 5-10
	⇩	■ CHANGE REMOTE ■ PASSWORDS	See page 5-10
	⇩	■ ACCESS ■ SUPERVISION	See page 5-11
	⇩	■ DUAL PERMISSION ■ SECURITY ACCESS	See page 5-12
	⇧	PASSWORD ACCESS EVENTS: Disabled	Range: Disabled, Enabled

The C70 supports password entry from a local or remote connection.

Local access is defined as access to settings or commands via the front panel. This includes both keypad entry and the RS232 port. Remote access is defined as access to settings or commands via any rear communications port. This includes both Ethernet and RS485 connections. Any change to the local or remote password enables this functionality.

ACCESS LEVEL — This setting is viewable on the front panel. The Setting and Command passwords can be changed in the EnerVista interface.

The "Restricted" option means that settings and commands can be accessed, but there is no access to factory configuration. Access automatically reverts to the Restricted level according to the access level timeout setting values. The access level is set to Restricted when control power is cycled.

The "Factory Service" level is not available and intended for factory use only.

There are two user security access levels, setting and command, for which you can set a password for each. Use of a password for each level controls whether users can enter commands or change settings. Another option is to specify setting and/or command access for individual user accounts.

- **Setting** — Allows the user to make any changes to any of the setting values:
  - Change any setting
  - Test mode operation
- **Command** — Restricts the user from making any settings changes, but allows the user to perform the following operations:
  - Change the state of virtual inputs
  - Clear the event records
  - Clear the oscillography records
  - Change the date and time
  - Clear the breaker arcing current
  - Clear the data logger
  - Clear the user-programmable pushbutton states

When entering a settings or command password via EnerVista or any serial interface, the user must enter the corresponding connection password. If the connection is to the back of the C70, use the remote password. If the connection is to the RS232 port of the front panel, use the local password.

The local setting and command sessions are initiated by the user through the front panel display and are disabled either by the user or by timeout (via the setting and command level access timeout settings). The remote setting and command sessions are initiated by the user through the EnerVista software and are disabled either by the user or by timeout.

The state of the session (local or remote, setting or command) determines the state of the following FlexLogic operands:

- ACCESS LOC SETG OFF — Asserted when local setting access is disabled
- ACCESS LOC SETG ON — Asserted when local setting access is enabled
- ACCESS LOC CMND OFF — Asserted when local command access is disabled
- ACCESS LOC CMND ON — Asserted when local command access is enabled
- ACCESS REM SETG OFF — Asserted when remote setting access is disabled
- ACCESS REM SETG ON — Asserted when remote setting access is enabled
- ACCESS REM CMND OFF — Asserted when remote command access is disabled
- ACCESS REM CMND ON — Asserted when remote command access is enabled

NOTE

A command or setting write operation is required to update the state of the remote and local security operands listed.

When a setting password or command password is set or updated, user access with a graphical front panel is removed. Simply log in again on the graphical front panel.

When the setting password is set or updated, the graphical front panel Access Level displays as Command. This is because the graphical front panel is a Modbus client and it does not have automatic access to the password change.

PASSWORD ACCESS EVENTS — This setting allows recording of password access events in the event recorder.

Change local passwords

SETTINGS ⇨ PRODUCT SETUP ⇨ SECURITY ⇨⇩ CHANGE LOCAL PASSWORDS

■ CHANGE LOCAL ■ PASSWORDS	⇔	CHANGE SETTING PASSWORD: No	Range: No, Yes
	⇧	CHANGE COMMAND PASSWORD: No	Range: No, Yes

As outlined in the previous section, there are two user security access levels, setting and command. Use of a password for each level controls whether users can enter commands or change settings.

Proper password codes are required to enable each access level. When a **CHANGE COMMAND PASSWORD** or **CHANGE SETTING PASSWORD** setting is programmed to "Yes" via the front panel interface, the following message sequence is invoked:

1. ENTER NEW PASSWORD: _____.
2. VERIFY NEW PASSWORD: _____.
3. NEW PASSWORD HAS BEEN STORED.

To gain write access to a "Restricted" setting, program the **ACCESS LEVEL** setting in the main security menu to "Setting" and then change the setting, or attempt to change the setting and follow the prompt to enter the programmed password. If the password is correctly entered, access is allowed. Access automatically reverts to the "Restricted" level according to the access level timeout setting values and when power is cycled.

NOTE

If the setting and command passwords are identical, then this one password allows access to both commands and settings.

If a remote connection is established, local passcodes are not visible.

5

Change remote passwords

Proper passwords are required to enable each command or setting level access, which are explained in the previous section.

SETTINGS ⇨ PRODUCT SETUP ⇨ SECURITY ⇨⇩ CHANGE REMOTE PASSWORDS

■ CHANGE REMOTE ■ PASSWORDS	⇔	CHANGE SETTING PASSWORD: No	Range: No, Yes
	⇧	CHANGE COMMAND PASSWORD: No	Range: No, Yes

To set the command or setting password in EnerVista:

1. In the EnerVista software or from the front panel, navigate to **Settings > Product Setup > Security** menu item to open the remote password settings window.
2. Click the command or setting password **Change** button.
3. Enter the new password in the **New Password** field. Requirements are outlined in the Password Requirements section earlier in this chapter. When an original password has already been used, enter it in the **Enter Password** field and click the **Send Password to Device** button.
4. Re-enter the password in the **Confirm Password** field.

5. Click the **OK** button. The password is checked to ensure that it meets requirements.

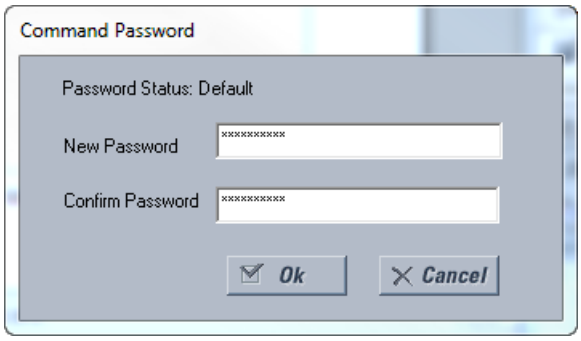

NOTE

If you establish a local (serial) connection to the relay, you cannot view remote passcodes.

Access supervision

SETTINGS ⇨ PRODUCT SETUP ⇨ SECURITY ⇨⇩ ACCESS SUPERVISION

■ ACCESS ■ SUPERVISION	⇔	■ ACCESS LEVEL ■ TIMEOUTS	See below
	⇩	INVALID ATTEMPTS BEFORE LOCKOUT: 3	Range: 2 to 5 in steps of 1
	⇧	PASSWORD LOCKOUT DURATION: 5 min	Range: 5 to 60 minutes in steps of 1

This menu displays when the **ACCESS LEVEL** setting is other than Restricted or Command.

The following access supervision settings are available.

INVALID ATTEMPTS BEFORE LOCKOUT — This setting specifies the number of times that an incorrect password can be entered within a three-minute time span before lockout occurs. When lockout occurs, the LOCAL ACCESS DENIED or REMOTE ACCESS DENIED FlexLogic operands are set to "On." These operands are returned to the "Off" state upon expiration of the lockout.

PASSWORD LOCKOUT DURATION — This setting specifies the time that the C70 locks out password access after the number of invalid password entries specified by the **INVALID ATTEMPTS BEFORE LOCKOUT** setting has occurred.

The C70 provides a means to raise an alarm upon failed password entry. If password verification fails while accessing a password-protected level of the relay (either settings or commands), the UNAUTHORIZED ACCESS FlexLogic operand is asserted. The operand can be programmed to raise an alarm via contact outputs or communications. This feature can be used to protect against both unauthorized and accidental access attempts.

The UNAUTHORIZED ACCESS operand is reset with the **COMMANDS ⇨⇩ CLEAR RECORDS ⇨⇩ RESET UNAUTHORIZED ALARMS** command. Therefore, to apply this feature with security, password-protect the Command level. The operand does not generate events or targets.

If events or targets are required, the UNAUTHORIZED ACCESS operand can be assigned to a digital element programmed with event logs or targets enabled.

The following table outlines access level timeout settings.

SETTINGS ⇨ PRODUCT SETUP ⇨ SECURITY ⇨⇩ ACCESS SUPERVISION ⇨⇩ ACCESS LEVEL TIMEOUTS

■ ACCESS LEVEL ■ TIMEOUTS	⇔	COMMAND LEVEL ACCESS TIMEOUT: 5 min	Range: 5 to 480 minutes in steps of 1
	⇧	SETTING LEVEL ACCESS TIMEOUT: 30 min	Range: 5 to 480 minutes in steps of 1

These settings allow the user to specify the length of inactivity required before returning to the Restricted access level. Note that the access level is set to Restricted when control power is cycled.

COMMAND LEVEL ACCESS TIMEOUT — This setting specifies the length of inactivity (no local or remote access) required to return to Restricted access from the Command password level.

SETTING LEVEL ACCESS TIMEOUT — This setting specifies the length of inactivity (no local or remote access) required to return to Restricted access from the Command password level.

Dual-permission security access

SETTINGS ⇨ PRODUCT SETUP ⇨ SECURITY ⇨⇩ DUAL PERMISSION SECURITY ACCESS

■ DUAL PERMISSION ■ SECURITY ACCESS	⇔	LOCAL SETTING AUTH: On	Range: selected FlexLogic operands (see below)
	⇩	REMOTE SETTING AUTH: On	Range: FlexLogic operand
	⇧	ACCESS AUTH TIMEOUT: 30 min	Range: 5 to 480 minutes in steps of 1

This menu displays when the **ACCESS LEVEL** setting is other than Restricted or Command.

This feature provides a mechanism to prevent unauthorized or unintended upload of settings to a relay through the local or remote interface.

The following settings are available through the local (front panel) interface only.

- **LOCAL SETTING AUTH** — This setting is used for local (front panel or RS232 interface) setting access supervision. Valid values for the FlexLogic operands are either “On” (default) or any physical “Contact Input ~~ On” value.

  If this setting is “On,” then local setting access functions as normal; that is, a local setting password is required. If this setting is any contact input on FlexLogic operand, then the operand must be asserted (on) prior to providing the local setting password to gain setting access.

  If setting access is *not* authorized for local operation (front panel or RS232 interface) and the user attempts to obtain setting access, then the UNAUTHORIZED ACCESS message displays on the front panel.

  If this setting is "Off," firmware upgrades are blocked. If this setting is "On," firmware upgrades are allowed.
- **REMOTE SETTING AUTH** — This setting is used for remote (Ethernet or RS485 interface) setting access supervision.

  If this setting is “On” (the default setting), then remote setting access functions as normal; that is, a remote password is required. If this setting is “Off,” then remote setting access is blocked even if the correct remote setting password is provided. If this setting is any other FlexLogic operand, then the operand must be asserted (set as on) prior to providing the remote setting password to gain setting access.

  If this setting is "Off," firmware upgrades are blocked. If this setting is "On," firmware upgrades are allowed.
- **ACCESS AUTH TIMEOUT** — This setting represents the timeout delay for local setting access. This setting is applicable when the **LOCAL SETTING AUTH** setting is programmed to any operand except “On.” The state of the FlexLogic operand is monitored continuously for an off-to-on transition. When this occurs, local access is permitted and the timer programmed with the **ACCESS AUTH TIMEOUT** setting value is started. When this timer expires, local setting access is immediately denied. If access is permitted and an off-to-on transition of the FlexLogic operand is detected, the timeout is restarted. The status of this timer updates every five seconds.

The following settings are available through the remote (EnerVista UR Setup) interface only. Select the **Settings > Product Setup > Security** menu item to display the security settings window.

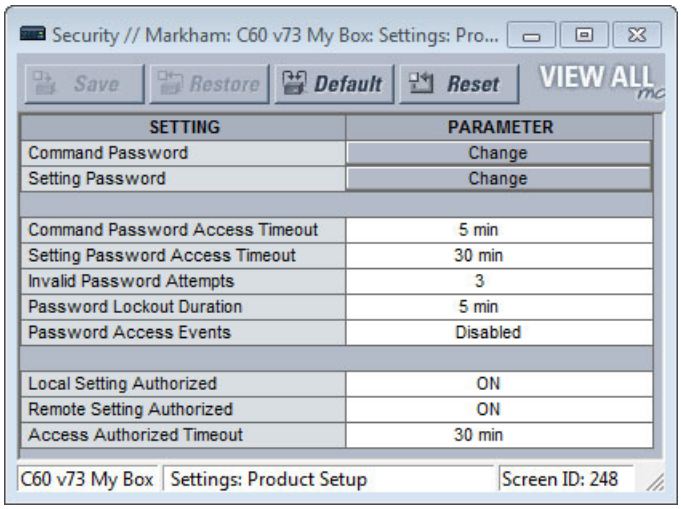

SETTING	PARAMETER
Command Password	Change
Setting Password	Change
Command Password Access Timeout	5 min
Setting Password Access Timeout	30 min
Invalid Password Attempts	3
Password Lockout Duration	5 min
Password Access Events	Disabled
Local Setting Authorized	ON
Remote Setting Authorized	ON
Access Authorized Timeout	30 min

The **Remote Settings Authorized** setting is used for remote (Ethernet or RS485 interface) setting access supervision. If this setting is "On" (the default setting), then remote setting access functions as normal; that is, a remote password is required. If this setting is "Off," then remote setting access is blocked even if the correct remote setting password is provided. If this setting is any other FlexLogic operand, then the operand must be asserted (on) prior to providing the remote setting password to gain setting access.

The **Access Authorized Timeout** setting represents the timeout delay remote setting access. It applies when the **Remote Settings Authorized** setting is programmed to any operand except "On" or "Off." The state of the FlexLogic operand is continuously monitored for an off-to-on transition. When this occurs, remote setting access is permitted, and the timer programmed with the **Access Authorized Timeout** setting value is started. When this timer expires, remote setting access is denied immediately. If access is permitted and an off-to-on transition of the FlexLogic operand is detected, the timeout is restarted. The status of this timer updates every five seconds.

5.3.1.3 EnerVista security

Enable the security management system

The EnerVista security system allows an administrator to manage access privileges of multiple users of EnerVista.

It is disabled by default to allow access to the device immediately after installation. When security is disabled, all users have administrator access. GE recommends enabling the EnerVista security before placing the device in service.

To enable the security system and require password use:

1. Select the **Security > User Management** menu to open the user management window.

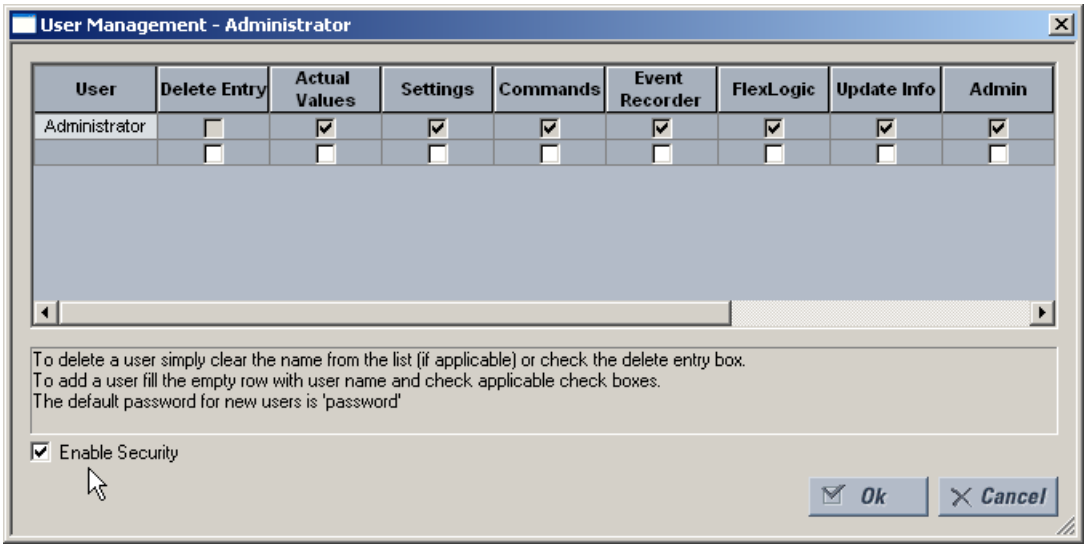

2. Enable the **Enable Security** check box in the lower-left corner to enable the security management system.
3. Click the **Ok** button.

5

NOTE

If you force password entry by using this feature, ensure that you know the Administrator password. If you do not know the password and are locked out of the software, contact GE Grid Solutions for the default password of a UR device. When using CyberSentry, the default password is "ChangeMe1#".

Security is now enabled for the EnerVista UR Setup software. Upon starting the software, users are now required to enter a username and password.

Add a new user

The following pre-requisites are required to add user accounts to the EnerVista security management system:

- The user adding the account must have administrator rights
- The EnerVista security management system must be enabled (previous section)

To add a user account:

1. Select the **Security > User Management** item from the top menu to open the user management window.
2. Enter a username in the **User** field. The username must be four to 20 characters in length.

3. Select the user access rights by enabling the check box of one or more fields.

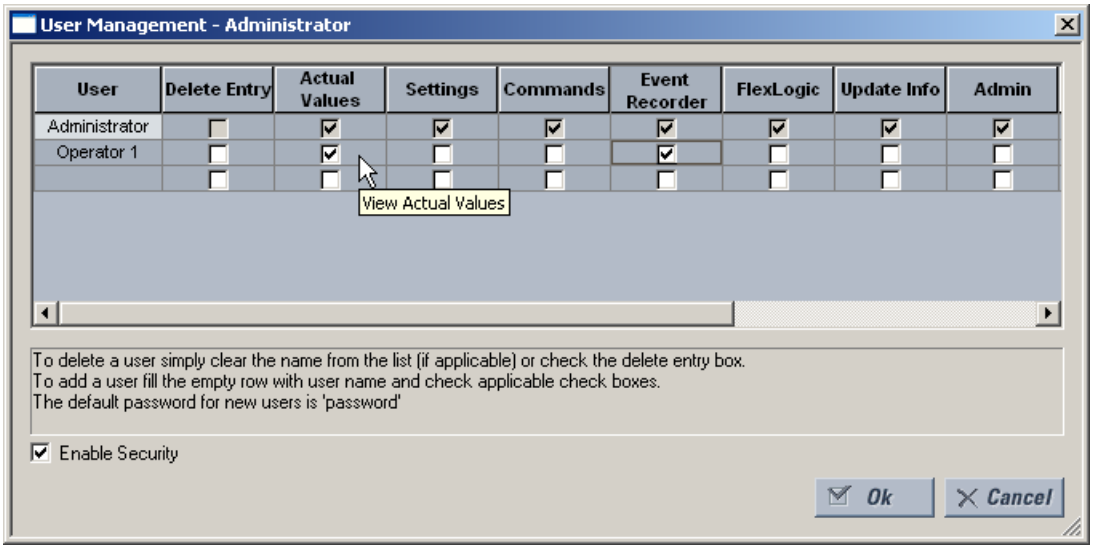

The table outlines access rights.

Table 5-1: Access rights summary

Field	Description
Delete Entry	Deletes the user account when exiting the user management window
Actual Values	Allows the user to read **Actual Values**
Settings	Allows the user to read **Settings** values
Commands	Allows the user to execute **Commands**
Event Recorder	Allows the user to use the **Event Recorder**
FlexLogic	Allows the user to read **FlexLogic** values
Update Info	Allows the user to write to any function to which they have read privileges. When any of the **Settings**, **Event Recorder**, and **FlexLogic** check boxes are enabled by themselves, the user is granted read access. When any of them are enabled in conjunction with the **Update Info** box, they are granted read and write access. The user is not granted write access to functions that are not enabled, even if the **Update Info** field is enabled.
Admin	When the check box is enabled, the user becomes an EnerVista UR Setup administrator and has all administrative rights. Exercise caution when granting administrator rights.

4. Click **OK** to add the user account to the system.

Modify user privileges

The following pre-requisites are required to modify user privileges in the EnerVista security management system:

- The user modifying the privileges must have administrator rights
- The EnerVista security management system must be enabled (the **Enable Security** check box enabled)

To modify user privileges:

1. Select the **Security > User Management** item from the top menu to open the user management window.
2. Locate the username in the **User** field.

3. Modify the user access rights by enabling or disabling one or more of the check boxes.

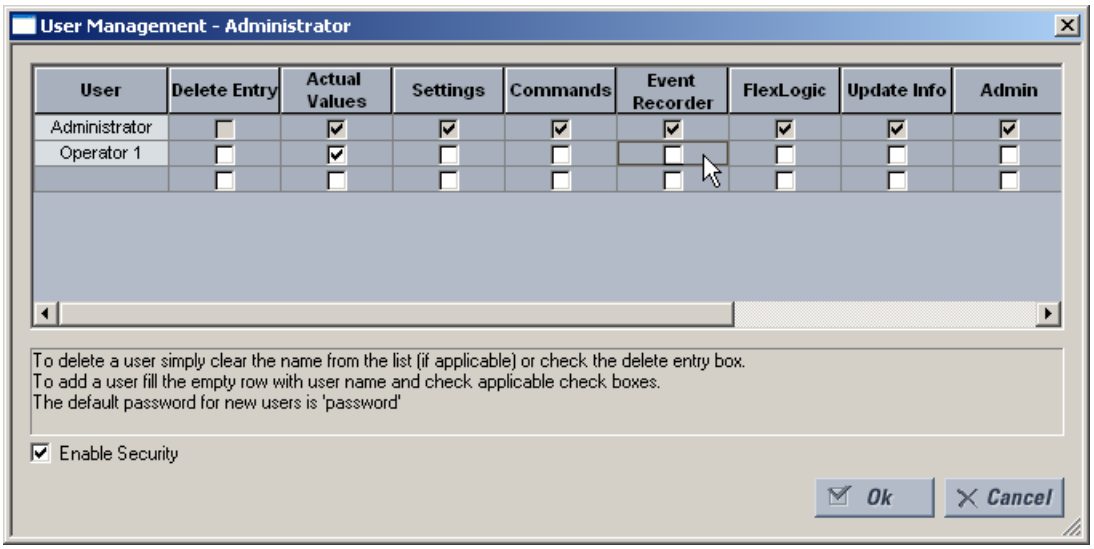

The table outlines access rights.

Table 5-2: Access rights summary

Field	Description
Delete Entry	Deletes the user account when exiting the user management window
Actual Values	Allows the user to read actual values
Settings	Allows the user to read setting values
Commands	Allows the user to execute commands
Event Recorder	Allows the user to use the digital fault recorder
FlexLogic	Allows the user to read FlexLogic values
Update Info	Allows the user to write to any function to which they have read privileges. When any of the **Settings**, **Event Recorder**, and **FlexLogic** check boxes are enabled by themselves, the user is granted read access. When any of them are enabled in conjunction with the **Update Info** box, they are granted read and write access. The user is not granted write access to functions that are not enabled, even if the **Update Info** field is enabled.
Admin	When this check box is enabled, the user becomes an EnerVista UR Setup administrator and has all administrative rights. Exercise caution when granting administrator rights.

4. Click **OK** to save the changes.

5.3.1.4 CyberSentry security

SOFTWARE OPTION

This feature requires a CyberSentry software option, specified at the time of ordering.

The EnerVista software provides the means to configure and authenticate the C70 access using either a server or the device. Access to functions depends on user role.

The login screen of EnerVista has two options for access to the C70, these being Server and Device authentication.

Figure 5-2: Login screen for CyberSentry

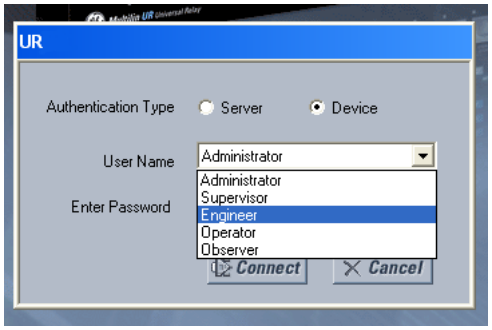

When the "Server" **Authentication Type** is selected, the C70 uses the RADIUS server and not its local authentication database to authenticate the user.

When the "Device" button is selected, the C70 uses its local authentication database and not the RADIUS server to authenticate the user. In this case, it uses built-in roles (Administrator, Engineer, Supervisor, Operator, Observer, or Administrator and Supervisor when Device Authentication is disabled), as login accounts and the associated passwords are stored on the C70 device. In this case, access is not user-attributable. In cases where user-attributable access is required, especially for auditable processes for compliance reasons, use server authentication (RADIUS) only.

No password or security information is displayed in plain text by the EnerVista software or the UR device, nor are they ever transmitted without cryptographic protection.

NOTE

Only (TCP/UDP) ports and services that are needed for device configuration and for customer enabled features are open. All the other ports are closed. For example, Modbus is on by default, so its TCP port 502, is open. But if Modbus is disabled, port 502 is closed. This function has been tested and no unused ports have been found open.

5

When CyberSentry is enabled, Modbus communications over Ethernet is encrypted, which is not always tolerated by SCADA systems. The UR has a bypass access feature for such situations, which allows unencrypted Modbus over Ethernet. The **Bypass Access** setting is available on the **SETTINGS ⇨ PRODUCT SETUP ⇨ SECURITY ⇨⇩ SUPERVISORY** screen. Note that other protocols (DNP, 101, 103, 104, EGD) are not encrypted, and they are good communications options for SCADA systems when CyberSentry is enabled.

When using the rear RS485 port and CyberSentry, registers can be read with a maximum buffer of 64 bytes. Settings may not be written, so use another port or configure the **SERIAL INACTIVITY TIMEOUT** setting to a high value, such as eight minutes, to give the relay enough time to finish the task.

CyberSentry settings through EnerVista

CyberSentry security settings are configured under **Device > Settings > Product Setup > Security**.

Figure 5-3: Security panel when CyberSentry installed

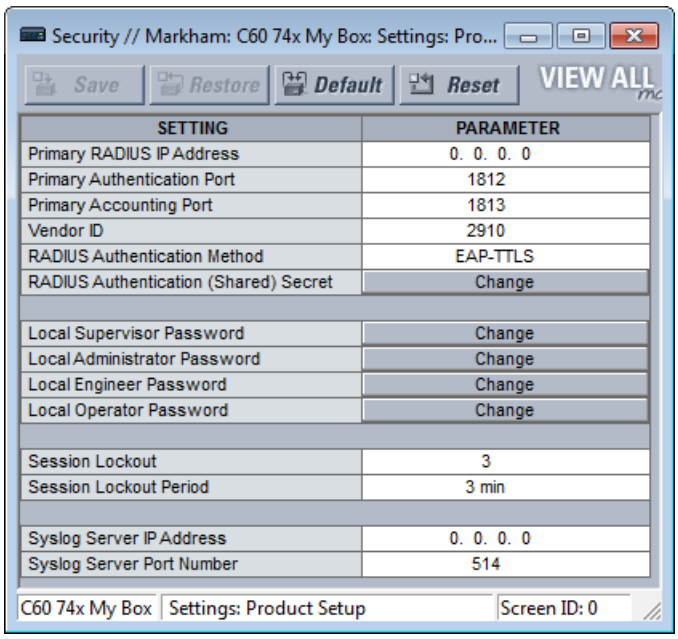

For the **Device > Settings > Product Setup > Supervisory** option, the panel looks like the following.

Figure 5-4: Supervisory panel

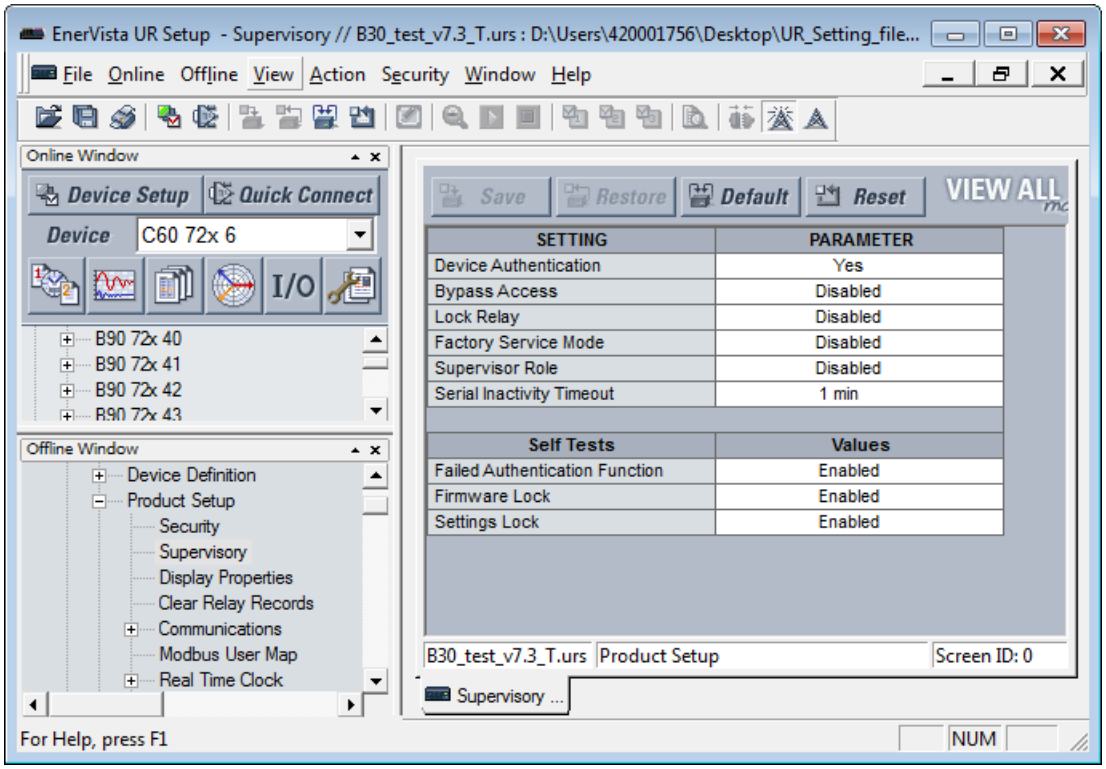

For the Security panel, the following settings are available.

Table 5-3: RADIUS server settings

Setting name	Description	Minimum	Maximum	Default	Units	Minimum permission
Primary RADIUS IP Address	IP address of the main RADIUS server. Default value indicates no Primary RADIUS server is configured, and hence RADIUS is disabled. Restart the relay for any change to take effect.	0.0.0.0	223.255.255.254	0.0.0.0	-	Administrator
Primary Authentication Port	RADIUS authentication port	1	65535	1812	-	Administrator
Primary Accounting Port	RADIUS accounting port	1	65535	1813	-	Administrator
Vendor ID	An identifier that specifies RADIUS vendor-specific attributes used with the protocol			Value that represents General Electric		Administrator
RADIUS Authentication Method	Authentication method used by RADIUS server. Can use EAP-TTLS, PEAP-GTC, or PAP. Selecting the PEAP-GTC option disables RADIUS authentication.	EAP-TTLS	PAP	EAP-TTLS	-	Administrator
RADIUS Authentication (Shared) Secret	Shared secret used in authentication. It displays as asterisks. This setting must meet the CyberSentry password requirements.	See the Password Requirements section earlier in this chapter	See the following password section for requirements	N/A	-	Administrator
Timeout	Timeout in seconds between re-transmission requests	0	9999	10	sec	Administrator
Retries	Number of retries before giving up	0	9999	3	-	Administrator
Confirm RADIUS Authentication (Shared) Secret	Confirmation of the shared secret. The entry displays as asterisks.	See the Password Requirements section	245 characters	N/A	-	Administrator

Table 5-4: General security settings

Setting name	Description	Minimum	Maximum	Default	Units	Minimum permission
Session Lockout	Number of failed authentications before the device blocks subsequent authentication attempts for the lockout period	0 (lockout disabled)	99	3	-	Administrator
Session Lockout Period	The period in minutes that a user is prevented from logging in after being locked out	0 (no period)	9999	3	min	Administrator
Syslog Server IP Address	The IP address of the target Syslog server to which all security events are transmitted	0.0.0.0	223.255.255.254	0.0.0.0	-	Administrator
Syslog Server Port Number	The UDP port number of the target syslog server to which all security events are transmitted	1	65535	514	-	Administrator
Device Authentication	When enabled, local Device authentication with roles is allowed. When disabled, the UR only authenticates to the AAA server (RADIUS). **NOTE:** Administrator and Supervisor (if still enabled) remain active even after Device authentication is disabled. The only permission for local Administrator is to re-enable Device authentication when Device authentication is disabled. To re-enable Device authentication, the Supervisor unlocks the device for setting changes, and then the Administrator can re-enable Device authentication.	Disabled	Enabled	Enabled	-	Administrator

Setting name	Description	Minimum	Maximum	Default	Units	Minimum permission
Firmware Lock (via Lock Relay)	Indicates if the device receives firmware upgrades. If Enabled and the firmware upgrade attempt is made, the device denies the upgrade and displays an error message that the lock is set. On each firmware upgrade, this setting goes back to the default. The Lock Relay setting blocks settings and firmware updates.	Disabled	Enabled	Enabled	-	Administrator
Factory Service Mode	When enabled, the device can go into factory service mode. To enable, Supervisor authentication is necessary.	Disabled	Enabled	Disabled	-	Supervisor (Administrator when Supervisor is disabled)
Restore to Defaults	Sets the device to factory defaults	No	Yes	No	-	Administrator
Supervisor Role	When enabled, the Supervisor role is active. To enable, Administrator authentication is necessary. When disabled, the Supervisor role is inactive. To disable, Supervisor authentication is necessary.	Disabled	Enabled	Enabled	-	Administrator to enable and Supervisor to disable
RADIUS user names	Ensures that RADIUS user names are not the same as local/device role names	See RADIUS server documents	See RADIUS server documents		-	Administrator
Password	Local/device roles except for Observer are password-protected. All RADIUS users are password-protected.	See the Password Requirements section earlier in this chapter	See the following password section for requirements	Change Me1#	Text	The specified role and Administrator, except for Supervisor, where it is only itself

5

Table 5-5: Security alarm settings

Setting name	Description / Details	Min	Max	Default	Units	Minimum permissions
Failed Authentications	A threshold number indicating when an alarm is set off to indicate too many failed authentication attempts	0 (disabled)	99	3	-	Administrator
Firmware Lock	A value indicating if the device can receive a firmware upgrade. If Enabled and a firmware upgrade attempt is made, the device alarm activates. If Disabled, the device alarm does not activate. On each firmware upgrade this setting goes back to the default.	Disabled	Enabled	Enabled	-	Administrator
Settings Lock	A value indicating if the device can accept any settings changes. If Enabled and a settings change attempt is made, the device alarm activates. If Disabled, the device alarm does not activate.	Disabled	Enabled	Enabled	-	Supervisor (Administrator if Supervisor has been disabled)

CyberSentry settings through the front panel

SETTINGS ⇨ PRODUCT SETUP ⇨ SECURITY

■ **SECURITY** ■	⇔	**LOGIN:** **None**	Range: Administrator, Engineer, Supervisor, Operator, Factory (for factory use only), None
	⇕	■ **CHANGE LOCAL** ■ **PASSWORDS**	See page 5-21

⇳	■ SESSION ■ SETTINGS	See page 5-22
⇳	■ RESTORE DEFAULTS ■	See page 5-22
⇳	■ SUPERVISORY ■	See page 5-22
⇳	SYSLOG IP ADDRESS: 0.0.0.0	Range: 0.0.0.0, 255.255.255.255
⇧	SYSLOG PORT NUMBER: 514	Range: 1 to 65535

LOGIN — This setting is applicable for Device authentication only. This setting allows a user to log in with a specific role, as outlined here. For the Supervisor role, enable the "Supervisor Role" setting. Log out by right-clicking the device in EnerVista and selecting the **Disconnect** option.

Whenever a new role is logged in, the user is prompted to enter a password. Passwords must obey the requirements specified earlier in the chapter in the Password Requirements section.The UR device supports five roles. Roles have their corresponding passwords, except the Observer role, which does not require a password. There are no time-outs for the Administrator, Engineer, Operator, and Supervisor when logged in using the front panel; log out manually or use the **Command > Security** commands in the software.

The roles are defined as follows:

- Administrator — Complete read/write access to all settings and commands. This role does not allow concurrent access. This role has an operand to indicate when it is logged on.
- Engineer — Complete read/write access to all settings and commands except configuring Security settings and firmware upgrades. This role does not allow concurrent access.
- Operator — The Operator has read/write access to all settings under the Commands menu/section. This role does not exist offline.
- Supervisor — This is only an approving role. This role's authentication commits setting changes submitted by Administrator or Engineer. The Supervisor role authenticates to unlock the UR relay for setting changes and not approve changes after the fact. Only a Supervisor can set the Settings Lock and Firmware Lock in the Security settings. This role also has the ability to forcefully log off any other role and clear the security event log. This role can also be disabled, but only through a Supervisor authentication. When this role is disabled its permissions are assigned to the Administrator role.
- Observer — This role has read-only access to all C70 settings. This role allows unlimited concurrent access but it has no download access to any files on the device. Observer is the default role if no authentication has been done to the device. This role displays as "None" on the front panel. When local authentication is used, no password is required for this role. When RADIUS server authentication is used, a password is required.

NOTE

The Factory service role is not available. It is for factory use only.

The Local Access Denied message on the front panel can mean that you need to log in to the UR in order to complete the action.

Change local passwords

SETTINGS ⇨ PRODUCT SETUP ⇨ SECURITY ⇨⇩ CHANGE LOCAL PASSWORDS

■ CHANGE LOCAL ■ PASSWORDS	⇔	LOGIN: None	Range: 20 alphanumeric characters
	⇳	NEW PASSWORD:	Range: 20 alphanumeric characters
	⇧	CONFIRM PASSWORD:	Range: 20 alphanumeric characters

The menu is shown on the front panel upon successful login of the Administrator role.

The **LOGIN** setting in this menu is similar to that described in **SETTINGS > PRODUCT SETUP > SECURITY** except for the factory role.

Passwords are stored in text format. No encryption is applied.

NOTE

In Device authentication mode, the Observer role does not have a password associated with it. In Server authentication mode the Observer role requires a password.

If you are locked out of the software, contact GE Grid Solutions for the default password. When using CyberSentry, the default password is "ChangeMe1#".

Once the passwords are set, the Administrator with Supervisor approval can change the role-associated password.

In CyberSentry, password encryption is not supported.

Session settings

SETTINGS ⇨ PRODUCT SETUP ⇨ SECURITY ⇨⇩ SESSION SETTINGS

■ SESSION ■ SETTINGS	⇔	SESSION LOCKOUT: 3	Range: 0 to 99
	⇧	SESSION LOCKOUT PERIOD: 3 min	Range: 0 to 9999 minutes

SESSION LOCKOUT — This setting specifies the number of failed authentications before the device blocks subsequent authentication attempts for the lockout period. A value of zero means lockout is disabled.

SESSION LOCKOUT PERIOD — This setting specifies the period of time in minutes of a lockout period. A value of 0 means that there is no lockout period.

5

Restore defaults

SETTINGS ⇨ PRODUCT SETUP ⇨ SECURITY ⇨⇩ RESTORE DEFAULTS

■ RESTORE DEFAULTS ■	⇔	LOAD FACTORY DEFAULTS: No	Range: Yes, No

LOAD FACTORY DEFAULTS — This setting is used to reset all the settings, communication, and security passwords. An Administrator role is used to change this setting and a Supervisor role (if not disabled) approves it.

Supervisory

SETTINGS ⇨ PRODUCT SETUP ⇨ SECURITY ⇨⇩ SUPERVISORY

■ SUPERVISORY ■	⇔	DEVICE AUTHENTICATION: Yes	Range: Yes, No
	⇩	BYPASS ACCESS: Disabled	Range: Local, Remote, Local and Remote, Disabled, Pushbuttons
	⇩	LOCK RELAY: Disabled	Range: Enabled, Disabled
	⇩	FACTORY SERVICE MODE: Disabled	Range: Enabled, Disabled
	⇩	■ SELF TESTS ■	See below
	⇩	SUPERVISOR ROLE: Disabled	Range: Enabled, Disabled
	⇧	SERIAL INACTIVITY TIMEOUT: 1 min	Range: 1 to 9999 minutes

The Supervisory menu settings are available for Supervisor role only, or if the Supervisor role is disabled then for the Administrator role only.

DEVICE AUTHENTICATION — This setting is enabled by default, meaning "Yes" is selected. When enabled, Device authentication with roles is enabled. When this setting is disabled, the UR only authenticates to the AAA server (RADIUS). However, the Administrator and Supervisor (when enabled) remain active even after device authentication is disabled and their only permission is to re-enable Device authentication. To re-enable Device authentication, the Supervisor unlocks the device for settings changes, then the Administrator re-enables device authentication.

BYPASS ACCESS — The bypass security feature provides an easier access, with no authentication and encryption for those special situations when this is considered safe. Only the Supervisor, or the Administrator when the Supervisor role is disabled, can enable this feature.

Mode	Front panel or serial (RS232, RS485)	Ethernet
Normal mode	Authentication — Role Based Access Control (RBAC) and passwords in clear	Authentication — RBAC and passwords encrypted SSH tunneling
Bypass access mode	No passwords for allowed RBAC levels	No passwords for allowed RBAC levels No SSH tunneling

The bypass options are as follows:

- Local — Bypasses authentication for push buttons, keypad, RS232, and RS485
- Remote — Bypasses authentication for Ethernet
- Local and Remote — Bypasses authentication for push buttons, keypad, RS232, RS485, and Ethernet
- Pushbuttons — Bypasses authentication for front panel push buttons only. On the graphical front panel, the authentication for side pushbuttons to control breakers and disconnects also is bypassed.

LOCK RELAY — This setting uses a Boolean value (Enabled/Disabled) to indicate if the device accepts settings changes and whether the device can receive a firmware upgrade. This setting can be changed by the Supervisor role, if it is enabled, or by the Administrator if the Supervisor role is disabled. The Supervisor role disables this setting for the relay to start accepting settings changes, command changes, or firmware upgrade. After all the setting changes are applied or commands executed, the Supervisor enables to lock settings changes.

Example: If this setting is enabled and an attempt is made to change settings or upgrade the firmware, the UR device denies the settings changes or denies upgrading the firmware. If this setting is disabled, the UR device accepts settings changes and firmware upgrade.

This role is disabled by default.

FACTORY SERVICE MODE — When Enabled, the device can go into factory service mode. For this setting to become enabled a Supervisor authentication is necessary. The default value is Disabled.

SUPERVISOR ROLE — When Enabled, the Supervisor role is active. To Disable this setting a Supervisor authentication is necessary. If disabled, the Supervisor role is not allowed to log in. In this case, the Administrator can change the settings under the Supervisory menu.

If enabled, Supervisor authentication is required to change the settings in the Supervisory menu. If the Supervisor disables their role after authentication, the Supervisor session remains valid until they switch to another role using MMI or until they end the current Supervisor session if using communications.

This role is disabled by default.

SERIAL INACTIVITY TIMEOUT — The role logged via a serial port is auto logged off after the Serial Inactivity timer times out. A separate timer is maintained for RS232 and RS485 connections. Set this value to a high number, such as eight minutes, when using the rear RS485 terminals for settings write.

GE recommends setting this value to at least 3 minutes for the following scenario: while connected to a CyberSentry device, with serial or USB cable connected to the front panel, and performing "Add Device to Offline Window" or an online/offline comparison. With less than the recommended 3 minutes, the serial activity timeout interrupts the connection and the security role login window appears. Upon login, the process resumes.

Self-tests

SETTINGS ⇨ PRODUCT SETUP ⇨ SECURITY ⇨⇩ SUPERVISORY ⇨ SELF TESTS

■ SELF TESTS ■	⇔	■ FAILED ■ AUTHENTICATE	See below

⇕	**FIRMWARE LOCK: Enabled**	Range: Enabled, Disabled
⇧	**SETTINGS LOCK: Enabled**	Range: Enabled, Disabled

FAILED AUTHENTICATE — If this setting is Enabled then the number of failed authentications is compared with the Session Lockout threshold. When the Session Lockout threshold is exceeded, this minor alarm indication comes up.

FIRMWARE LOCK — If this setting is Enabled, then any firmware upgrade operation attempt when the Lock Relay setting is enabled brings up this self test alarm.

SETTINGS LOCK — If this setting is Enabled then an unauthorized write attempt to a setting for a given role activates this self test.

SETTINGS ⇨ PRODUCT SETUP ⇨ SECURITY ⇨⇩ SUPERVISORY ⇨ SELF TESTS ⇨ FAILED AUTHENTICATE

■ **FAILED** ■ **AUTHENTICATE**	⇔	**FAILED AUTHENTICATE: Enabled**	Range: Enabled, Disabled

CyberSentry setup

When first using CyberSentry security, use the following procedure for setup.

1. Log in to the relay as Administrator by using the **VALUE** keys on the front panel to enter the default password "ChangeMe1#". Note that the Lock Relay setting needs to be disabled in the **Security > Supervisory** menu. When this setting is disabled, configuration and firmware upgrade are possible. By default, this setting is disabled.
2. Enable the Supervisor role if you have a need for it.
3. Make any required changes in configuration, such as setting a valid IP address for communication over Ethernet.
4. Log out of the Administrator account by choosing None.
5. Next, Device or Server authentication can be chosen on the login screen, but the choice is available only in EnerVista. Use Device authentication to log in using the five pre-configured roles (Administrator, Supervisor, Engineer, Operator, Observer). When using a serial connection, only Device authentication is supported. When Server authentication is required, characteristics for communication with a RADIUS server must be configured. This is possible only in the EnerVista software. The RADIUS server itself also must be configured. The appendix called RADIUS Server at the end of this instruction manual gives an example of how to set up a simple RADIUS server. Once both the RADIUS server and the parameters for connecting the UR to the server have been configured, you can choose Server authentication on the login screen of EnerVista.

NOTICE

The use of CyberSentry for devices communicating through an Ethernet-to-RS485 gateway is not supported. Because these gateways do not support the secure protocols necessary to communicate with such devices, the connection cannot be established. Use the device as a non-CyberSentry device.

Users logged in through the front panel are not timed out and cannot be forcefully logged out by a supervisor. Roles logged in through the front panel that do no allow multiple instances (Administrator, Supervisor, Engineer, Operator) must switch to None (equivalent to a logout) when they are done in order to log out.

For all user roles except Observer, only one instance can be logged in at a time, for both login by front panel and software.

To configure Server authentication:

1. In the EnerVista software, choose Device authentication and log in as Administrator.
2. Configure the following RADIUS server parameters: IP address, authentication port, shared secret, and vendor ID.
3. On the RADIUS server, configure the user accounts. Do not use the five pre-defined roles as user names (Administrator, Supervisor, Engineer, Operator, Observer) in the RADIUS server. If you do, the UR relay automatically provides the authentication from the device.
4. In the EnerVista software, choose Server authentication and log in using the user name and password configured on the RADIUS server for Server authentication login.

5. After making any required changes, log out.

NOTICE When changing settings offline, ensure that only settings permitted by the role that performs the settings download are changed because only those changes are applied.

Pushbuttons (both user-control buttons and user-programmable buttons) located on the front panel can be pressed by an Administrator or Engineer role. This also applies to the **RESET** button, which resets targets, where targets are errors displayed on the front panel or the Targets panel of the EnerVista software. The **RESET** button has special behavior in that it allows these two roles to press it even when they are logged in through the RS232 port and not through the front panel.

To reset the security event log and self-test operands:

1. Log in as Supervisor (if the role is enabled) or Administrator (if the Supervisor role is disabled) and execute a clear security command under **Commands > Security > Clear Security**.

Security events

The security events produced when the CyberSentry option is purchased are sent as sytem log (syslog) messages to a syslog server, if one is configured. The format is as follows.

	Security log	Event Number	Date & Timestamp	Username	IP address	Role	Activity Value

Event Number — Event identification number (index)

Date & Timestamp — UTC date and time

Username — 255 chars maximum, but in the security log it is truncated to 20 characters

IP address — Device IP address

Role — 16 bit unsigned, of type format F617

Enumeration	Role
0	None
1	Administrator
2	Supervisor
3	Engineer
4	Operator
5	Factory

Activity Value — 16 bit unsigned

Enumeration	Description
1	Authentication Failed
2	User Lockout
3	FW Upgrade
4	FW Lock
5	Settings Lock
6	Settings Change. Because this can fill the entire event log, it is supported by the already existing Settings_Change.log file. This event is not required.
7	Clear Oscillography command
8	Clear Data Logger command (not applicable to all UR products)
9	Clear Demand Records command (not applicable to all UR products)
10	Clear Energy command (not applicable to all UR products)
11	Clear Unauthorized Access command
12	Clear Teleprotection Counters command (not applicable to all UR products)
13	Clear All Relay Records command
14	Role Log in

Enumeration	Description
15	Role Log off

In addition to supporting syslog, a C70 with CyberSentry also saves the security events in two local security files, these being SECURITY_EVENTS.CSV and SETTING_CHANGES.LOG. Details on these files and how to retrieve them are available in the EnerVista software under **Maintenance > Retrieve File**. Depending on the level of criticality/severity, a syslog server or a reporting tool gathering information from a syslog server can produce reports, charts, and so on. All severity levels are per RFC 5424.

Table 5-6: CyberSentry system events recorded

Event	Severity	Description
FAILED_AUTH, ORIGIN, TIMESTAMP	Notice (5)	A failed authentication with origin information (username and IP:MAC address), a time stamp in UTC time when it occurred
AUTH_LOCKOUT, ORIGIN, TIMESTAMP	Warning (4)	An authentication lockout has occurred because of too many failed authentication attempts
FIRMWARE_UPGD, ORIGIN, TIMESTAMP	Information (6)	Indicates that a change of firmware has occurred
FIRMWARE_LOCK, ORIGIN, TIMESTAMP	Warning (4)	An attempt was made to change firmware while the firmware lock was enabled
SETTING_CHG, ORIGIN, TIMESTAMP	Notice (5)	Indicates setting change(s)
SETTING_LOCK, ORIGIN, TIMESTAMP	Warning (4)	An attempt was made to change settings while the settings lock was enabled
LOGIN, ORIGIN, TIMESTAMP	Information (6)	Indicates when a certain role logged in
LOGOUT, ORIGIN, TIMESTAMP	Information (6)	Indicates when a certain role logged out or timed out
CLEAR_OSCILLOGRAPHY	Notice (5)	Clear oscillography command was issued
CLEAR_DATA_LOGGER	Notice (5)	Clear data logger command was issued
CLEAR_DEMAND_RECS	Notice (5)	Clear demand records command was issued
CLEAR_ENERGY	Notice (5)	Clear energy command was issued
RESET_UNAUTH_ACCESS	Notice (5)	Reset Unauthorized access command was issued
CLEAR_TELEPROTECTION_CNT	Notice (5)	Clear teleprotection counters command was issued
CLEAR_ALL_RECS	Notice (5)	Clear all records command was issued
WRITE_SETTING_FILE	Notice (5)	Write settings file to the relay

5.3.2 Display properties

SETTINGS ⇨ PRODUCT SETUP ⇨⇩ DISPLAY PROPERTIES

■ DISPLAY ■ PROPERTIES	⇔	LANGUAGE: English	Range: English; English, French; English, Russian; English, Chinese; English, German (examples; depends on order code) Visible when language other than English purchased
	⇩	FLASH MESSAGE TIME: 1.0 s	Range: 0.5 to 10.0 s in steps of 0.1
	⇩	DEFAULT MESSAGE TIMEOUT: 300 s	Range: 10 to 900 s in steps of 1
	⇩	DEFAULT MESSAGE INTENSITY: 25 %	Range: 25%, 50%, 75%, 100% Visible when a VFD is installed
	⇩	SCREEN SAVER FEATURE: Disabled	Range: Disabled, Enabled Visible when an LCD is installed
	⇩	SCREEN SAVER WAIT TIME: 30 min	Range: 1 to 65535 min. in steps of 1 Visible when an LCD is installed
	⇩	CURRENT CUT-OFF LEVEL: 0.020 pu	Range: 0.002 to 0.020 pu in steps of 0.001
	⇧	VOLTAGE CUT-OFF LEVEL: 1.0 V	Range: 0.1 to 1.0 V secondary in steps of 0.1

Some relay messaging characteristics can be modified to suit different situations using the display properties settings.

LANGUAGE — This setting selects the language used to display settings, actual values, and targets. This setting displays when a language other than English was purchased, and the range depends on the order code of the relay.

For Japanese, the settings display in Japanese on the graphical front panel, while the keys printed on the panel are in English.

For Japanese and Chinese, up to 10 characters can be input in a field on the graphical front panel, not 20.

With the graphical front panel, the language can be changed regardless of the language purchased. That is, all languages can be used. If you select a language with which you are unfamiliar and want to switch back to English for example, the menu order remains the same. That is, Settings is always second, Product Setup is always first, Display Properties is always second, and Language is always first.

If the language is changed after entering user-configured names, such as relay names, the strings are not translated. For example, a relay name is entered in English, the language is changed to Japanese, and the relay name remains in English. Set the language before changing settings.

NOTE

Restart the relay after changing the **LANGUAGE** setting.

The language can be selected also for the front panel in EnerVista under **Maintenance > Change Front Panel**.

The language of the EnerVista software can be changed under **View > Language**. Languages supported by the operating system display; that is for Polish or Japanese to display, the software needs to be installed on a Polish or Japanese operating system.

FLASH MESSAGE TIME — Flash messages are status, warning, error, and information messages displayed in response to certain key presses during settings programming. These messages override any normal messages. Use this setting to change the duration of flash messages on the display.

DEFAULT MESSAGE TIMEOUT — If the keypad is inactive for a period of time, the relay automatically reverts to a default message. The inactivity time is modified using this setting to ensure that messages remain on the screen long enough during programming or reading of actual values. This setting is not supported on the graphical front panel.

DEFAULT MESSAGE INTENSITY — To extend phosphor life in the vacuum fluorescent display, the brightness can be attenuated during default message display. During keypad interrogation, the display always operates at full brightness. This setting is not supported on the graphical front panel.

SCREEN SAVER FEATURE and **SCREEN SAVER WAIT TIME** — These settings are only visible if the C70 has a liquid crystal display (LCD) and control its backlighting. When the **SCREEN SAVER FEATURE** is "Enabled," the LCD backlighting turns off after the **DEFAULT MESSAGE TIMEOUT** followed by the **SCREEN SAVER WAIT TIME**, provided that no keys have been pressed and no target messages are active. When a keypress occurs or a target becomes active, the LCD backlighting turns on. These settings are not supported on the graphical front panel.

CURRENT CUT-OFF LEVEL — This setting modifies the current cut-off threshold. Very low currents (1 to 2% of the rated value) are very susceptible to noise. Some customers prefer very low currents to display as zero, while others prefer the current to display even when the value reflects noise rather than the actual signal. The C70 applies a cut-off value to the magnitudes and angles of the measured currents. If the magnitude is below the cut-off level, it is substituted with zero. This applies to phase and ground current phasors as well as true RMS values and symmetrical components. The cut-off operation applies to quantities used for metering, protection, and control, as well as those used by communications protocols. Note that the cut-off level for the sensitive ground input is 10 times lower that the **CURRENT CUT-OFF LEVEL** setting value. Raw current samples available via oscillography are not subject to cut-off.

VOLTAGE CUT-OFF LEVEL — This setting modifies the voltage cut-off threshold. Very low secondary voltage measurements (at the fractional volt level) can be affected by noise. Some customers prefer these low voltages to be displayed as zero, while others prefer the voltage to be displayed even when the value reflects noise rather than the actual signal. The C70 applies a cut-off value to the magnitudes and angles of the measured voltages. If the magnitude is below the cut-off level, it is substituted with zero. This operation applies to phase and auxiliary voltages, and symmetrical components. The cut-off operation applies to quantities used for metering, protection, and control, as well as those used by communications protocols. Raw samples of the voltages available via oscillography are not subject to cut-off.

The **CURRENT CUT-OFF LEVEL** and the **VOLTAGE CUT-OFF LEVEL** are used to determine the metered power cut-off levels. The power cut-off level is calculated using the following equations. For Delta connections:

$$\text{3-phase power cut-off} = \frac{\sqrt{3} \times \textbf{CURRENT CUT-OFF LEVEL} \times \textbf{VOLTAGE CUT-OFF LEVEL} \times \text{VT primary} \times \text{CT primary}}{\text{VT secondary}} \quad \textbf{Eq. 5-3}$$

For Wye connections:

$$\text{3-phase power cut-off} = \frac{3 \times \textbf{CURRENT CUT-OFF LEVEL} \times \textbf{VOLTAGE CUT-OFF LEVEL} \times \text{VT primary} \times \text{CT primary}}{\text{VT secondary}} \quad \textbf{Eq. 5-4}$$

$$\text{per-phase power cut-off} = \frac{\textbf{CURRENT CUT-OFF LEVEL} \times \textbf{VOLTAGE CUT-OFF LEVEL} \times \text{VT primary} \times \text{CT primary}}{\text{VT secondary}} \quad \textbf{Eq. 5-5}$$

where VT primary = VT secondary × VT ratio and CT primary = CT secondary × CT ratio.

For example, given the following settings:

CURRENT CUT-OFF LEVEL: "0.02 pu"
VOLTAGE CUT-OFF LEVEL: "1.0 V"
PHASE CT PRIMARY: "100 A"
PHASE VT SECONDARY: "66.4 V"
PHASE VT RATIO: "208.00 : 1"
PHASE VT CONNECTION: "Delta"

We have:

CT primary = "100 A", and
VT primary = **PHASE VT SECONDARY** × **PHASE VT RATIO** = 66.4 V × 208 = 13811.2 V

The power cut-off is therefore:

power cut-off= (**CURRENT CUT-OFF LEVEL** × **VOLTAGE CUT-OFF LEVEL** × CT primary × VT primary)/VT secondary
= ($\sqrt{3}$ × 0.02 pu × 1.0 V × 100 A × 13811.2 V) / 66.4 V
= 720.5 watts

Any calculated power value below this cut-off does not display. As well, the three-phase energy data do not accumulate if the total power from all three phases does not exceed the power cut-off.

NOTE

Lower the **VOLTAGE CUT-OFF LEVEL** and **CURRENT CUT-OFF LEVEL** with care as the relay accepts lower signals as valid measurements. Unless dictated otherwise by a specific application, the default settings of "0.02 pu" for **CURRENT CUT-OFF LEVEL** and "1.0 V" for **VOLTAGE CUT-OFF LEVEL** are recommended.

5.3.3 Graphical front panel

SOFTWARE OPTION

The graphical front panel is a hardware option.

Use the EnerVista software to configure the graphical front panel. The settings are not accessible from the graphical front panel.

The following screens are available:

- Home page
- Rolling mode
- Metering editor
- Single-line diagram editor
- Annunciator editor
- Configurable navigation

The settings menu itself and the event record pages are not configurable.

Multiple screens can be opened in the EnerVista software, but the first remains active and the others can be read-only. For example, the Annunciator Editor and Single Line Diagram Editor can be open and active, then subsequently opened Rolling Mode and Home Page screens are read-only. Close the windows, then re-open the one required.

5.3.3.1 Home page

This window sets the home page displayed on the graphical front panel and the date and time formats for all pages. Home page options include display of product information, alarms, actual values, and event records.

The path is **Settings > Product Setup > Graphical Panel > Home Page**. The menu does not display when there is no graphical front panel.

Figure 5-5: Home page with product information

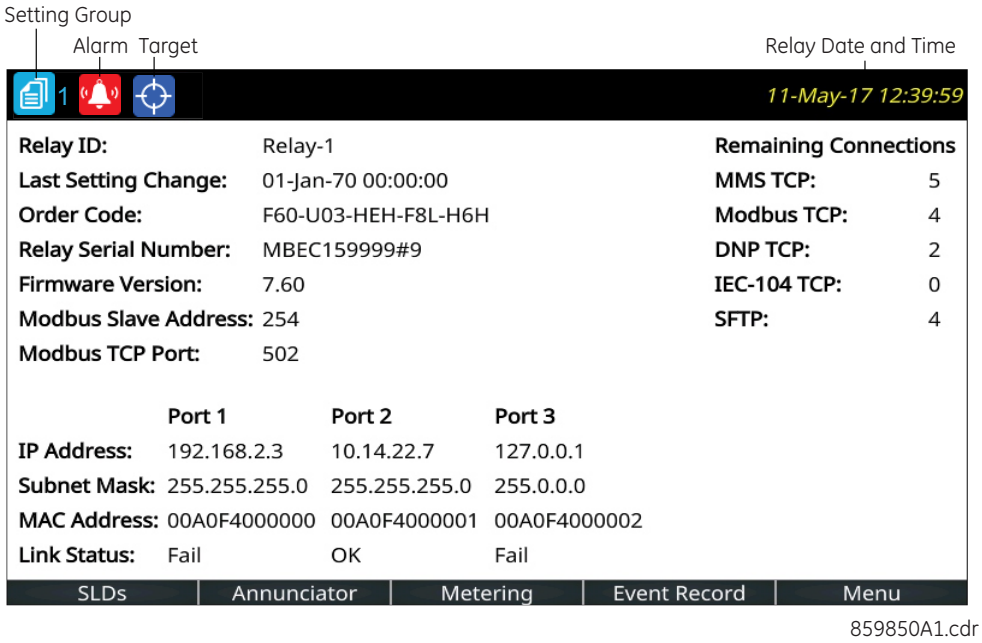

859850A1.cdr

Figure 5-6: Home page settings

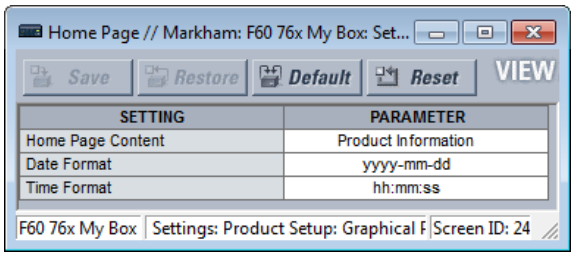

Home Page Content

Range: Product Information, SLD 1...5, Annunciator, Annunciator 1...8, Phasors 1...6, Tabular 1...5, Event Records, Targets
Default: Product Information

This setting specifies the page to display between the home page header and footer. Pressing the **Home** button returns the display to this page. The home page displays for the rolling mode delay specified, then changes to the rolling mode pages.

The "Annunciator" option without a page number specifies the first annunciator page in the following sequence:

- The first annunciator page that contains an annunciator window that is in alarm (fast flash)

- The first annunciator page that contains an annunciator window that is in ringback. Ringback is a "return alert." Visual and audible signals are given when conditions return to normal, then the sequence returns to normal by pushing the **RESET** button.
- The first annunciator page that contains an annunciator window that is in abnormal state
- Annunciator page 1

Whenever an annunciator window changes state this list is re-evaluated, which can result in the home page displaying a different annunciator page.

The Tabular option displays a configured actual values/metering page.

The Targets option displays error messages, such as wrong transceiver, similar to event record entries.

Date Format

Range: yyyy-mm-dd, dd-mmm-yy, yyyy/mm/dd, m/d/yyyy, m/d/yy, mm/dd/yy, mm/dd/yyyy, yy/mm/dd
Default: yyyy-mm-dd

This setting specifies the format for dates on the graphical front panel. It applies to the page header, the events records, the annunciator, and everywhere else a date displays on the panel. If the relay is synchronized to an external time source via PTP, IRIG-B, SNTP, and so on, the date/time is shown in white, and otherwise in yellow.

yyyy — four-digit year, for example 2017

yy — two-digit year, for example 17 for 2017

mmm — abbreviation of month name, for example Jan for January

mm — two-digit month, for example 01 for January

m — one or two-digit month, for example 1 for January and 10 for October

dd — two-digit day, for example 08

d — one or two-digit day, for example 8 and 28

To set the date and time, access **Synchronize Devices** in the software, synchronize to a time source using **Settings > Product Setup > Real Time Clock**, or synchronize to the computer using **Commands > Set Date and Time**.

Time Format

Range: hh:mm:ss, h:mm:ss tt
Default: hh:mm:ss

This setting specifies the format for time on the graphical front panel. It applies to the page header and everywhere else a time displays on the panel. When the Date Format and the Time Format use the defaults, the date and time are separated by the character "T" per the ISO convention, such as "2017-09-24T10:58:31". Otherwise the date and time are separated by a space. If the relay is synchronized to an external time source via PTP, IRIG-B, SNTP, and so on, the date/time is shown in white, and otherwise in yellow.

hh — two-digit hour, for example 02 for two o'clock

h — one or two-digit hour, for example 2 for two o'clock

mm — two-digit minute, for example 51 minutes

ss — two-digit second (can have a decimal and further digits appended), for example 16 seconds

tt — AM or PM based on 12 hour clock

If microseconds have to be displayed, for example, in the event records, the 24-hour clock is adopted. The representation of an accumulated period (for example hh:mm) is not affected by the selected time format.

To set the date and time, access **Synchronize Devices** in the software or synchronize to a time source using **Settings > Product Setup > Real Time Clock**.

5.3.3.2 Rolling mode

After a user-defined period of inactivity, the graphical front panel changes, or rolls, to user-selected pages. Up to 10 pages can be specified. Similarly, the display backlight intensity is lowered to a specified level; lower intensity extends the life of the display.

Each rolling page displays for a few seconds; duration cannot be set.

The path is **Settings > Product Setup > Graphical Panel > Rolling Mode**.

Figure 5-7: Rolling mode settings

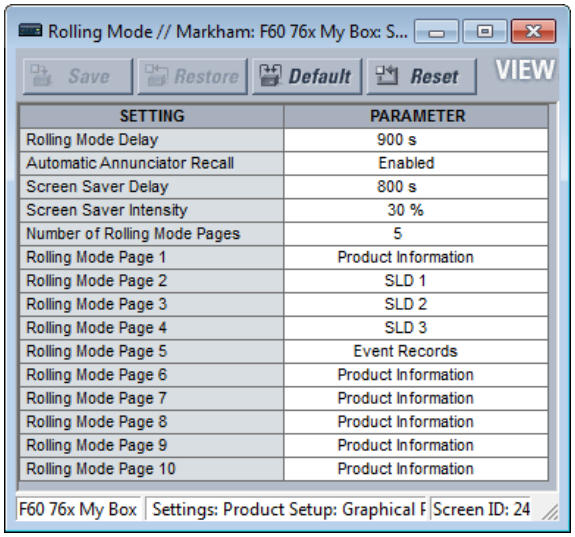

SETTING	PARAMETER
Rolling Mode Delay	900 s
Automatic Annunciator Recall	Enabled
Screen Saver Delay	800 s
Screen Saver Intensity	30 %
Number of Rolling Mode Pages	5
Rolling Mode Page 1	Product Information
Rolling Mode Page 2	SLD 1
Rolling Mode Page 3	SLD 2
Rolling Mode Page 4	SLD 3
Rolling Mode Page 5	Event Records
Rolling Mode Page 6	Product Information
Rolling Mode Page 7	Product Information
Rolling Mode Page 8	Product Information
Rolling Mode Page 9	Product Information
Rolling Mode Page 10	Product Information

Rolling Mode Delay

Range: 0 to 900 s in steps of 1
Default: 300 s

Set this delay to 0 to disable the rolling mode feature.

Otherwise, after no pushbutton has been pressed for the amount of time specified by this setting, the display automatically enters rolling mode. While in the rolling mode, the Rolling Mode Pages display. Rolling mode can be interrupted when a setting changes, such as changing the home page, then resumes rolling.

Automatic Annunciator Recall

Range: Enabled, Disabled
Default: Enabled

When Enabled, an annunciator window changes state, and the display is in rolling mode, this setting terminates rolling mode and displays the annunciator page containing the changed state.

The Configurable Navigation feature takes precedence over this setting when the Automatic Annunciator Recall and Configurable Navigation are activated by the same input.

Screen Saver Delay

Range: 0 to 900 s in steps of 1
Default: 300 s

The screen saver mode extends the life of the display. After the amount of time set here, the screen saver activates and the display intensity is reduced to the level set by the **Screen Saver Intensity** setting. When in rolling mode, rolling continues while the screen saver is active. The screen saver terminates when rolling mode terminates. To disable the screen saver, set the delay to 0.

Screen Saver Intensity

Range: 0, 10, 20, or 30 %
Default: 30 %

This setting sets the brightness of the display while the screen saver is active. For example, 0% means that the screen is dark and nothing displays. Pressing a pushbutton or changing a setting in the software, for example, re-activates the display.

Number of Rolling Mode Pages

Range: 1 to 10 in steps of 1
Default: 1

This setting specifies the number of rolling pages. During rolling mode, the graphical front panel displays pages from 1 to the selected number.

Rolling Mode Page 1 to 10

Range: Product Information, SLD 1...5, Annunciator, Annunciator 1...8, Phasors 1...6, Tabular 1...5, Event Records, Targets
Default: Product Information

These settings specify the pages to display on the graphical front panel while in rolling mode.

The "Annunciator" selection without a page number specifies the first annunciator page in the following sequence:

- The first annunciator page that contains an annunciator window that is in alarm (fast flash)
- The first annunciator page that contains an annunciator window that is in ringback. Ringback is a "return alert." Visual and audible signals are given when conditions return to normal, then the sequence returns to normal by pushing the **RESET** button.
- The first annunciator page that contains an annunciator window that is in abnormal state
- Annunciator page 1

Whenever an annunciator window changes state the list is re-evaluated, which can result in the display of a different annunciator page in the rolling sequence.

The Tabular option displays a configured actual values/metering page.

The Targets option displays error messages, such as wrong transceiver, similar to event record entries.

5.3.3.3 Metering editor

This feature creates tables of actual/metered values for the graphical front panel. It configures the content that displays in the Metering Tab pushbutton. An actual value, status, or text can be displayed. Five tabular metering pages can be configured. There also can be a phasor page for each configured AC source, and these pages are not configurable.

The path is **Settings > Product Setup > Graphical Panel > Metering Editor**.

Set the Current Page, Page Name, Layout, configure the top inputs, then the cells. The 16 inputs at the top of the page are used as inputs for the **Status Index** fields. Click the **Preview** button to view the page.

For a phasor diagram, configure the source under **Settings > System Setup > Signal Sources**. The diagram is then viewable by pushing the **Metering** Tab pushbutton on the graphical front panel. The Metering Editor is not used for these phasor diagrams.

The figures show setup and table preview.

The Cells configured are not retained when using the **Convert Device Settings** function, for example when converting a file in the Offline Window from version 7.6 to 7.7.

Figure 5-8: Metering Editor window

Save | Restore | Default | Reset | VIEW ALL mode

STATUS	STATUS INPUTS			
1 to 4:	87L DIFF OP	87L DIFF OP G	87L DIFF BLOCKED	OFF
5 to 8:	PH DIST Z1 OP	GND DIST Z1 OP	PH DIST Z2 OP	GND DIST Z2 OP
9 to 12:	PH DIST Z3 OP	GND DIST Z3 OP	OFF	OFF
13 to 16:	OFF	OFF	OFF	OFF

CURRENT PAGE	Page 1	PAGE NAME	87L DIFF	LAYOUT	6x4		Preview	
PARAMETER	CONTENT	STATUS INDEX	TEXT	OFF TEXT	FONT	TEXT COLOR	BACK COLOR	ACTUAL
Cell(1, 1)	Text	Select One	DIFF OPERANDS		20			Configure
Cell(1, 2)	Status	1	87L DIFF OP	87LP NOT OP	16			Configure
Cell(1, 3)	Status	2	87L DIFF OP G	87LG NOT OP	16			Configure
Cell(1, 4)	Status	3	87L BLOCKED	87L NOT BLK	16			Configure
Cell(2, 1)	Text	Select One	DIFF CURRENT		20			Configure
Cell(2, 2)	Actual	Select One			16			Configure
Cell(2, 3)	Actual	Select One			16			Configure
Cell(2, 4)	Actual	Select One			16			Configure
Cell(3, 1)	Text	Select One	RESTRAINT CURR		20			Configure
Cell(3, 2)	Actual	Select One			16			Configure
Cell(3, 3)	Actual	Select One			16			Configure
Cell(3, 4)	Actual	Select One			16			Configure
Cell(4, 1)	Text	Select One	LOCAL CURRENT		20			Configure
Cell(4, 2)	Actual	Select One			16			Configure
Cell(4, 3)	Actual	Select One			16			Configure
Cell(4, 4)	Actual	Select One			16			Configure
Cell(5, 1)	Text	Select One	REM CURRENT		20			Configure
Cell(5, 2)	Actual	Select One			16			Configure
Cell(5, 3)	Actual	Select One			16			Configure
Cell(5, 4)	Actual	Select One			16			Configure
Cell(6, 1)	Text	Select One	GND DIFF		20			Configure
Cell(6, 2)	Actual	Select One			16			Configure
Cell(6, 3)	Text	Select One	GND RESTRAINT		20			Configure
Cell(6, 4)	Actual	Select One			16			Configure

Figure 5-9: Preview for graphical front panel

//Metering/87L DIFF

DIFF OPERANDS	87L DIFF OP	87L DIFF OP G	87L BLOCKED
DIFF CURRENT	000000.000 A	000000.000 A	000000.000 A
RESTRAINT CURR	000000.000 A	000000.000	000000.000 A
LOCAL CURRENT	000000.000 A	000000.000 A	000000.000 A
REM CURRENT	000000.000 A	000000.000 A	000000.000 A
GND DIFF	000000.000 A	GND RESTRAINT	000000.000 A

Page 1 : 87L DIFF Rows: 6 Columns: 4

To avoid conflict with XML programming, do not enter the following characters on the Annunciator and Metering editor panels: " (quotation mark), ' (apostrophe), < (less than), > (greater than), & (ampersand). When used, the text following the character does not display or the Annunciator and Metering panels do not display on the graphical front panel.

STATUS INPUTS 1 to 16

Range: OFF, ON, any FlexLogic operand
Default: OFF

This setting identifies the potential inputs for use in the STATUS INDEX fields, for display of the status of FlexLogic operands.

A maximum of eight Status Inputs can be used per metering page, and 16 in all metering pages.

Select the metering input from the drop-down list. The options reflect the FlexLogic operands applicable to the C70. They are inputs for all five metering pages, not just the current page.

CURRENT PAGE

Range: Page 1...Page 5
Default: Page 1

Select the metering page to configure from the drop-down list. There are five pages possible, viewable with the Tab pushbuttons on the graphical front panel.

PAGE NAME

Range: Page 1...Page 5
Default: Page 1

Up to 20 characters can be input here as the name of each metering page. The name displays for the Tab pushbutton on the graphical front panel.

LAYOUT

Range: 3x4, 4x6, 6x8, 6x4, 8x6, 12x8, 12x4, 16x6, 18x8
Default: 6x4

This setting determines how many rows and columns display on the graphical front panel with the metering information. The configurable rows in the settings window change dynamically based on this setting.

CONTENT

Range: Actual, Status, Text
Default: Text

Select the type of content to display.

- Actual — an actual value/data. The **Configure** button becomes active for the actual value to be selected.
- Status — one of the operands selected from the STATUS INPUTS fields. Select it in the **STATUS INDEX** field.
- Text — indicates that text is to display instead of a metered value

STATUS INDEX

Range: 1...16
Default:

This field becomes active when the **CONTENT** field is set to Status. It selects the input from the STATUS INPUTS to display the on/off status of the selected operand.

A maximum of eight Status Inputs can be used per metering page, and 16 in all metering pages.

TEXT

Range: up to 20 alphanumeric characters
Default:

Enter the text to display on the graphical front panel. This field is active when the **CONTENT** field is set to Text or Status. When Status is selected, the text displays when the status input is in the "on" state.

OFF TEXT

Range: up to 20 alphanumeric characters
Default:

Enter the text to display on the graphical front panel when the element being monitored is in an off/closed state. This field is active when the **CONTENT** field is set to Status. The text displays when the status input is in the "off" state.

FONT

Range: 16, 18, 20
Default: 16

Set the font size to display on the graphical front panel.

TEXT COLOR

Range: 24-bit color selector
Default: Black

Set the text color to display in the specified cell.

BACK COLOR

Range: 24-bit color selector
Default: Grey

Set the background color to display in the specified cell.

ACTUAL (Configure)

Range: Configure
Default: Configure

The **Configure** button becomes active when the **CONTENT** field is set to "Actual." The window specifies the metering data to display.

Figure 5-10: Metering value properties window

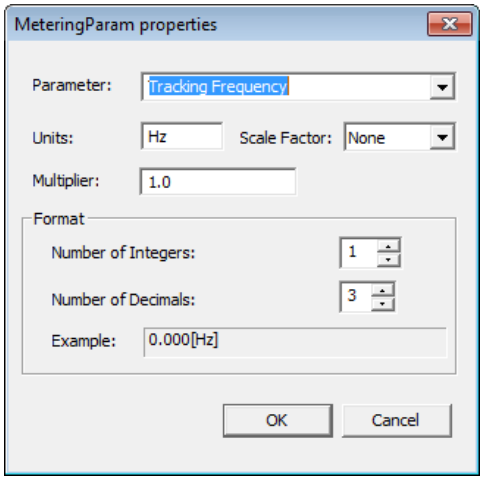

Parameter

Range: any FlexAnalog parameter
Default:

This setting selects a FlexAnalog parameter that specifies the metered value to display in the metering window. A FlexAnalog is an analog parameter.

Units

Range: up to eight alphanumeric characters
Default:

This setting specifies the units of measurement for the metered value and is populated based on the Parameter selected. The field can be left blank when units of measure do not apply.

Scale Factor

Range: G Giga, M Mega, k Kilo, None
Default: None

This setting allows the user to specify the scaling factor for the metering units value. Options depend on the Parameter.

Multiplier

Range: -1000000 to 1000000
Default: 1.0

This setting allows the user to specify a multiplier for the metering parameter value. The multiplier must be in compliance with the 32-bit floating-point format per IEEE 754, otherwise, the input value is represented as per the IEEE standard. For example, 1234.56789 is represented as 1234.567871094, and 9876.54321 as 9876.54296875.

Number of Integers

Range: 1 to 12 in steps of 1

Default: 1

This setting specifies the number of integers in the displayed metered value. It can be used to provide for leading character spacing of the display value.

For example, setting the number to 2 displays 00.000[V] and setting it to 3 displays 000.000[V].

Number of Decimals

Range: 0 to 10 in steps of 1

Default: 3

This setting specifies the number of decimal places in the displayed metered value. For example, setting the number to 1 displays 0.0 and setting it to 2 displays 0.00.

5.3.3.4 Single-line diagram editor

The path is **Settings > Product Setup > Graphical Panel > Single Line Diagram Editor**. Use is explained in the Interfaces chapter.

5.3.3.5 Annunciator editor

The annunciator editor is used to create annunciator content for the graphical front panel, including alarms and actual values. Use is explained in the Interfaces chapter.

The path is **Settings > Product Setup > Graphical Panel > Annunciator Editor**.

To add an alarm, access the Annunciator Editor, configure the Layout and Page Name, configure the alarm or actual value, set the text and color, then save. On the graphical front panel, view the content by pressing the **Annunciator** Tab pushbutton at the bottom of the **Home** page. (Alarms do not display automatically.) Acknowledge the alarm by navigating to it with the arrow pushbuttons, then pressing the **ENTER** or **RESET** pushbutton.

The figure shows alarms for basic functions. The last annunciator page is named Device Alarms. Alarms are set for the device being offline, Ethernet cable issues, unauthorized access, battery failure, and high ambient temperature. They can reset themselves when conditions return to normal, except for unauthorized access and temperature monitoring, which require the alarms to be acknowledged. The self-test error functions, here for Ethernet and battery failures, also have been enabled under **Settings > Product Setup > User-Programmable Self Tests** (not shown). When the alarms are triggered, they display with a red background. An alarm is acknowledged by using the arrow keys on the graphical front panel then pressing the **ENTER** button.

Figure 5-11: Annunciator editor with preview shown

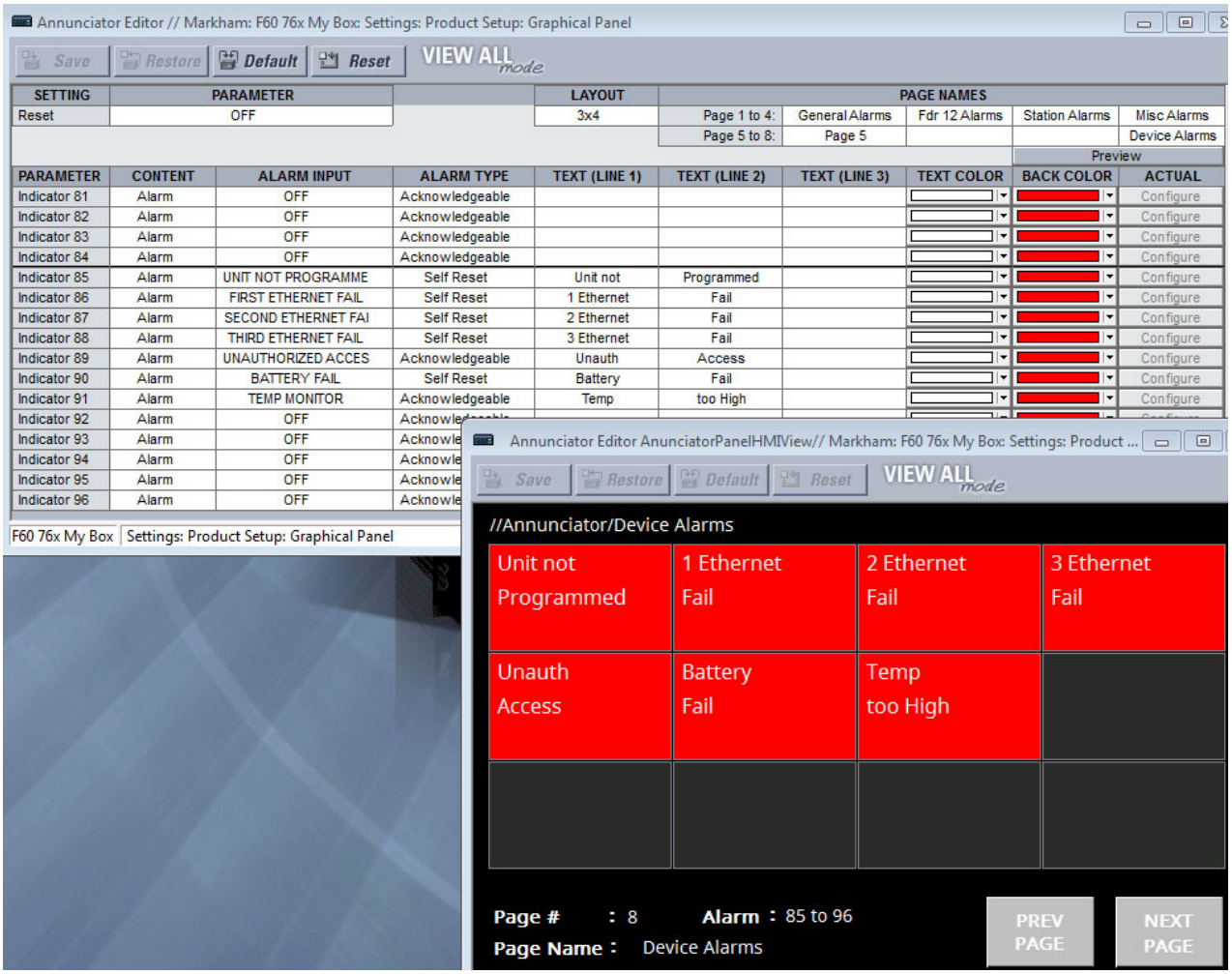

To avoid conflict with XML programming, do not enter the following characters on the Annunciator and Metering editor panels: " (quotation mark), ' (apostrophe), < (less than), > (greater than), & (ampersand). When used, the text following the character does not display or the Annunciator and Metering panels do not display on the graphical front panel.

Reset

Range: ON, OFF, any FlexLogic operand
Default: OFF

This setting selects a FlexLogic operand that when activated acknowledges/resets all annunciator windows in the graphical front panel. For example, to have the first user pushbutton resets all alarms, set this to PUSHBUTTON 1 ON and turn on the pushbutton under **Settings > Product Setup > User-Programmable Pushbuttons**. This setting is the same as the one defined in **Settings > Inputs/Outputs > Resetting > Reset Annunciator**. See the Resetting section later in this chapter.

LAYOUT

Range: 3x4, 4x6, 6x8
Default: 3x4

Selects the number of rows and columns to display on the annunciator pages. For example, 3x4 means 12 windows display per page over eight pages. Up to 96 entries are possible.

To view the layout, click the **Preview** button.

PAGE NAMES

Range: up to 20 alphanumeric characters

Default: Page 1...Page 8

Up to 20 characters can be input as the name of each annunciator page. The number of pages depends on the Layout. The name displays for the Tab pushbutton on the graphical front panel.

PARAMETER

Range: Indicator 1...Indicator 96

Default: Indicator 1...Indicator 96

Read-only field. Up to 96 windows are possible.

CONTENT

Range: Actual, Alarm, Mixed

Default: Alarm

Select if the cell is to be an alarm, an actual value, or a combination thereof, for example consists of a single metered value (set to “Actual”), contains a single alarm indication (set to “Alarm”), or contains both a metered value and an alarm indication (set to “Mixed”).

ALARM INPUT

Range: OFF, ON, any FlexLogic operand

Default: OFF

Select a trigger for the alarm, or the input signal connected to the alarm. For example, when set to "FIRST ETHERNET FAIL" and the Ethernet cable connected to port 1 is removed, the alarm is triggered. (Note that when the Ethernet cable is inserted into an SFP connector and the SFP connector is removed, the alarm is not triggered.) The field is read-only for an actual value.

The selectable options are the FlexLogic operands specific to the product.

ALARM TYPE

Range: Acknowledgeable, Self Reset, Latched

Default: Acknowledgeable

Set the alarm type. The field is read-only for an actual value.

Acknowledgeable — Follow the state transitions, as outlined in the Annunciator section of the Interfaces chapter. The alarm blinks until acknowledged, then remains on until the condition clears.

Self Reset — Track the state of the input operand. The alarm turns on when the trigger activates and off when the trigger clears.

Latched — Alarm is on until acknowledged/reset individually or until the **RESET** button is pressed.

To acknowledge/reset/unlatch an alarm, use the arrow buttons on the graphical front panel and press the **ENTER** button.

TEXT (LINE 1 to 3)

Range: up to 10 alphanumeric characters

Default:

The text that displays in the annunciator cell. Three lines can be displayed. Note that a specified metering value replaces the text for the selected line. This means that a line can display text or be set to show an actual metered value. If the text does not display it is because an actual metered value is over-riding it; change the line for the text or for the actual value.

TEXT COLOR

Range: 24-bit color selector

Default: White

The color to display for the three text or actual value lines specified.

BACK COLOR

Range: 24-bit color selector

Default: Red

The background color to display for any triggered cell, for example when an alarm is triggered.

ACTUAL (Configure)

Range: Configure

Default: Configure

The **Configure** button becomes active when the **CONTENT** field is set to "Actual" or "Mixed." The window specifies the metering data to display.

Parameter

Range: any FlexAnalog parameter

Default:

This setting selects a FlexAnalog parameter that specifies the metered value to display in the annunciator alarm.

Units

Range: up to eight alphanumeric characters

Default:

This setting specifies the units of measurement for the metered value and is populated based on the Parameter selected. The field can be left blank when units of measure do not apply.

Scale Factor

Range: G Giga, M Mega, k Kilo, None

Default: None

This setting allows the user to specify the scaling factor for the metering units value. Options depend on the Parameter.

Multiplier

Range: -1000000 to 1000000

Default: 1.0

This setting allows the user to specify a multiplier for the metering parameter value. The multiplier must be in compliance with the 32-bit floating-point format per IEEE 754, otherwise, the input value is represented as per the IEEE standard. For example, 1234.56789 is represented as 1234.567871094, and 9876.54321 as 9876.54296875.

Number of Integers

Range: 1 to 12 in steps of 1

Default: 1

This setting specifies the number of integers in the displayed analog value. It can be used to provide for leading character spacing of the display value.

For example, setting the number to 2 displays 00.000[V] and setting it to 3 displays 000.000[V].

Number of Decimals

Range: 0 to 10 in steps of 1

Default: 3

This setting specifies the number of decimal places in the displayed analog value. For example, setting the number to 1 displays 0.0 and setting it to 2 displays 0.00.

Display in Line

Range: 1, 2, 3

Default: 1

This setting specifies the line in the annunciator alarm window to display the metered value. The actual value replaces the text for the selected line. For example, 2 means the value displays in line 2 of the text; any text configured to display in that line does not display.

5.3.3.6 Configurable navigation

The path is **Settings > Product Setup > Graphical Panel > Configurable Navigation**.

This feature allows FlexLogic operands to trigger page display on the graphical front panel. It consists of 64 setting pairs, each with a condition and an activation page. The condition selects any FlexLogic operand. The activation page selects any page available for the graphical front panel. The page opens whenever the selected operand transitions from Off to On. The page remains open until rolling mode initiates, another trigger initiates from Configurable Navigation, or the **Home** button is pressed.

Avoid selecting condition operands that are likely to operate simultaneously but activate different pages, as only one page can be opened at a time. For example, do not select a single-line diagram page for breaker status open and select an annunciator page for a trip alarm.

In the example shown, failure of any of the three Ethernet ports triggers the Product Information page to display. With unauthorized access (such as wrong password), IRIG-B clock failure, or breaker trouble, the Event Records display. When a breaker opens, a single-line diagram displays. For the Ethernet and IRIG-B failure operation to work, these functions also have been enabled under **Settings > Product Setup > User-Programmable Self Tests**.

Figure 5-12: Configurable navigation editor

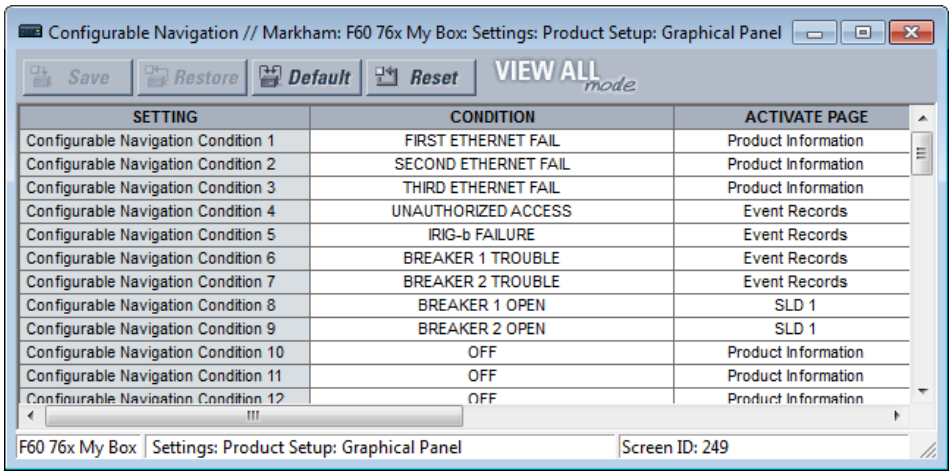

SETTING	CONDITION	ACTIVATE PAGE
Configurable Navigation Condition 1	FIRST ETHERNET FAIL	Product Information
Configurable Navigation Condition 2	SECOND ETHERNET FAIL	Product Information
Configurable Navigation Condition 3	THIRD ETHERNET FAIL	Product Information
Configurable Navigation Condition 4	UNAUTHORIZED ACCESS	Event Records
Configurable Navigation Condition 5	IRIG-b FAILURE	Event Records
Configurable Navigation Condition 6	BREAKER 1 TROUBLE	Event Records
Configurable Navigation Condition 7	BREAKER 2 TROUBLE	Event Records
Configurable Navigation Condition 8	BREAKER 1 OPEN	SLD 1
Configurable Navigation Condition 9	BREAKER 2 OPEN	SLD 1
Configurable Navigation Condition 10	OFF	Product Information
Configurable Navigation Condition 11	OFF	Product Information
Configurable Navigation Condition 12	OFF	Product Information

To use the feature, select a **CONDITION**, select an **ACTIVATE PAGE**, then save.

CONDITION

Range: OFF, ON, any FlexLogic operand

Default: OFF

Select the FlexLogic operand for the trigger. When it transitions from Off to On, it opens the page specified by the **ACTIVATE PAGE** setting. The FlexLogic operands selectable depend on product. Select it from the drop-down list. Or click or select the field and start typing to auto-fill. For example, typing F displays FIRST ETHERNET FAIL, while typing BR displays the first breaker option.

ACTIVATE PAGE

Range: Product Information, SLD 1...5, Annunciator, Annunciator 1...8, Actual Values Phasors 1...6, Tabular 1...5, Event Records, Targets

Default: Product Information

This setting specifies the page to display on the graphical front panel when the FlexLogic operand selected by its **CONDITON** setting transitions from Off to On.

The "Annunciator" option without a page number specifies the first annunciator page in the following sequence:

- The first annunciator page that contains an annunciator window that is in alarm (fast flash)
- The first annunciator page that contains an annunciator window that is in ringback. Ringback is a "return alert." Visual and audible signals are given when conditions return to normal, then the sequence returns to normal by pushing the **RESET** button.
- The first annunciator page that contains an annunciator window that is in abnormal state
- Annunciator page 1

The Tabular option displays a configured actual values/metering page.

The Targets option displays error messages, such as wrong transceiver, similar to event record entries.

5.3.4 Clear relay records

SETTINGS ⇨ PRODUCT SETUP ⇨⇩ CLEAR RELAY RECORDS

■ CLEAR RELAY ■ RECORDS	⇔	CLEAR USER REPORTS: Off	Range: FlexLogic operand
	⇩	CLEAR EVENT RECORDS: Off	Range: FlexLogic operand
	⇩	CLEAR OSCILLOGRAPHY: Off	Range: FlexLogic operand
	⇩	CLEAR DATA LOGGER: Off	Range: FlexLogic operand
	⇩	RESET UNAUTH ACCESS: Off	Range: FlexLogic operand
	⇩	CLEAR DIR I/O STATS: Off	Range: FlexLogic operand Visible only for units with Direct I/O module

RESET UNAUTH ACCESS — Resets the access restriction counter.

Selected records can be cleared from user-programmable conditions with FlexLogic operands. Assigning user-programmable pushbuttons to clear specific records is a typical application for these commands. Since the C70 responds to rising edges of the configured FlexLogic operands, they must be asserted for at least 50 ms to take effect.

Clearing records with user-programmable operands is not protected by the command password. However, user-programmable pushbuttons are protected by the command password. Thus, if they are used to clear records, the user-programmable pushbuttons can provide extra security if required.

For example, to assign user-programmable pushbutton 1 to clear demand records, apply the following settings.

1. Assign the clear demand function to pushbutton 1 by making the following change in the **SETTINGS ⇨ PRODUCT SETUP ⇨⇩ CLEAR RELAY RECORDS** menu:

   CLEAR DEMAND: "PUSHBUTTON 1 ON"

2. Set the properties for user-programmable pushbutton 1 by making the following changes in the **SETTINGS ⇨ PRODUCT SETUP ⇨⇩ USER-PROGRAMMABLE PUSHBUTTONS ⇨ USER PUSHBUTTON 1** menu:

   PUSHBUTTON 1 FUNCTION: "Self-reset"
   PUSHBTN 1 DROP-OUT TIME: "0.20 s"

5.3.5 Communications

5.3.5.1 Menu

SETTINGS ⇨ PRODUCT SETUP ⇨⇩ COMMUNICATIONS

■ COMMUNICATIONS ■	⇔	■ SERIAL PORTS ■	See below
	⇩	■ NETWORK ■	See page 5-42
	⇩	■ IPv4 ROUTE TABLE ■	See page 5-48
	⇩	■ MODBUS PROTOCOL ■	See page 5-51
	⇩	■ PROTOCOL ■	See page 5-51

⇕	■ DNP PROTOCOL ■	See page 5-53
⇕	■ DNP / IEC104 ■ POINT LISTS	See page 5-56
⇕	■ IEC 61850 PROTOCOL ■	Access in EnerVista See page 5-57
⇕	■ WEB SERVER ■ HTTP PROTOCOL	See page 5-103
⇕	■ TFTP PROTOCOL ■	See page 5-104
⇕	■ IEC 60870-5-104 ■ PROTOCOL	See page 5-104
⇕	■ IEC103 ■ PROTOCOL	See page 5-106
⇧	■ USB 2.0 PORT ■	See page 5-111

5.3.5.2 Serial ports

SETTINGS ⇨ PRODUCT SETUP ⇨⇩ COMMUNICATIONS ⇨ SERIAL PORTS

■ SERIAL PORTS ■	⇔	RS232 BAUD RATE: 115200	Range: 19200, 115200
	⇕	RS485 COM2 BAUD RATE: 19200	Range: 300, 1200, 2400, 4800, 9600, 14400, 19200, 28800, 33600, 38400, 57600, 115200 bit/s
	⇕	RS485 COM2 PARITY: Even	Range: None, Odd, Even
	⇧	RS485 COM2 RESPONSE MIN TIME: 0 ms	Range: 0 to 1000 ms in steps of 10

The front RS232 port applies to enhanced and basic front panels.

RS232 BAUD RATE, **RS485 COM2 BAUD RATE**, and **PARITY** — The C70 is equipped with two independent serial communication ports. The front panel RS232 port (USB port with graphical front panel) is intended for local use. The rear COM2 port is RS485 and has settings for baud rate and parity. It is important that these parameters agree with the settings used on the computer or other equipment that is connected to these ports. Any of these ports can be connected to a computer running the EnerVista software, for example to download and upload setting files, view measured parameters, and upgrade the relay firmware. A maximum of 32 relays can be daisy-chained and connected to a DCS, PLC, or computer using the RS485 ports. If IEC 60870-103 is chosen as the protocol, valid baud rates are 9600 and 19200 bit/s, and valid parity is Even.

RS485 COM2 RESPONSE MIN TIME — This setting specifies the minimum time before the rear RS485 port transmits after receiving data from a host. This feature allows operation with hosts that hold the RS485 transmitter active for some time after each transmission.

5.3.5.3 Ethernet network topology

The C70 has three Ethernet ports. Each Ethernet port must belong to a different network or subnetwork. Configure the IP address and subnet to ensure that each port meets this requirement. Two subnets are different when the bitwise AND operation performed between their respective IP address and mask produces a different result. Communication becomes unpredictable when more than one port is configured to the same subnet.

Example 1

IP1/Mask1: 10.1.1.2/255.255.255.0 (where LAN 1 is 10.1.1.x/255.255.255.0)

IP2/Mask2: 10.2.1.2/255.255.255.0 (where LAN2 is 10.2.1.x/255.255.255.0)

IP3/Mask3: 10.3.1.2/255.255.255.0 (where LAN3 is 10.3.1.x/255.255.255.0)

Example 2

IP1/Mask1: 10.1.1.2/255.0.0.0 (where LAN1 is 10.x.x.x/255.0.0.0)

IP2/Mask2: 11.1.1.2/255.0.0.0 (where LAN2 is 11.x.x.x/255.0.0.0)

IP3/Mask3: 12.1.1.2/255.0.0.0 (where LAN3 is 12.x.x.x/255.0.0.0)

Example 3 — Incorrect

IP1/Mask1: 10.1.1.2/255.0.0.0

IP2/Mask2: 10.2.1.2/255.0.0.0

IP3/Mask3: 10.3.1.2/255.0.0.0

This example is incorrect because the mask of 255.0.0.0 used for the three IP addresses makes them belong to the same network of 10.x.x.x.

Single LAN, no redundancy

The topology shown in the following figure allows communications to SCADA, local configuration/monitoring through EnerVista, and access to the public network shared on the same LAN. No redundancy is provided.

Figure 5-13: Network configuration for single LAN

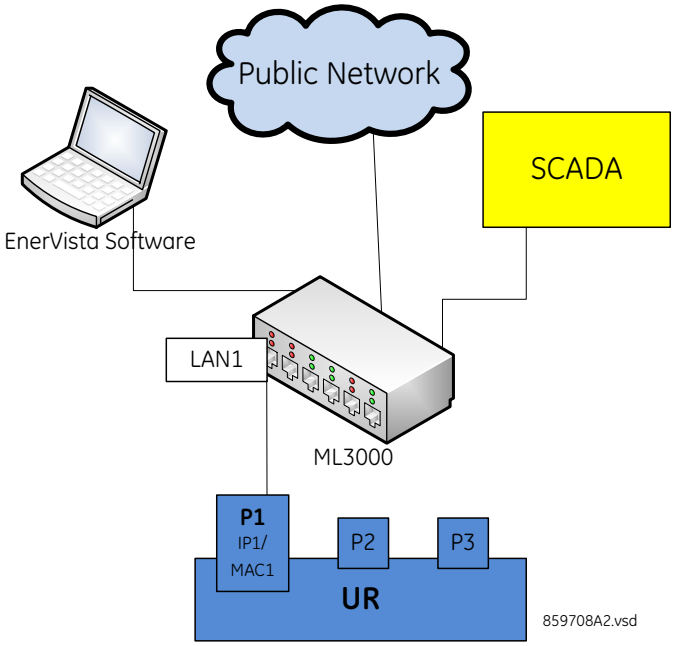

Multiple LANS, with redundancy

The following topology provides local configuration/monitoring through EnerVista software and access to the public network shared on LAN1, to which port 1 (P1) is connected. There is no redundancy provided on LAN1. Communications to SCADA is provided through LAN2. P2 and P3 are connected to LAN2, where P2 is the primary channel and P3 is the redundant channel. In this configuration, P3 uses the IP and MAC addresses of P2.

Figure 5-14: Multiple LANs, with redundancy

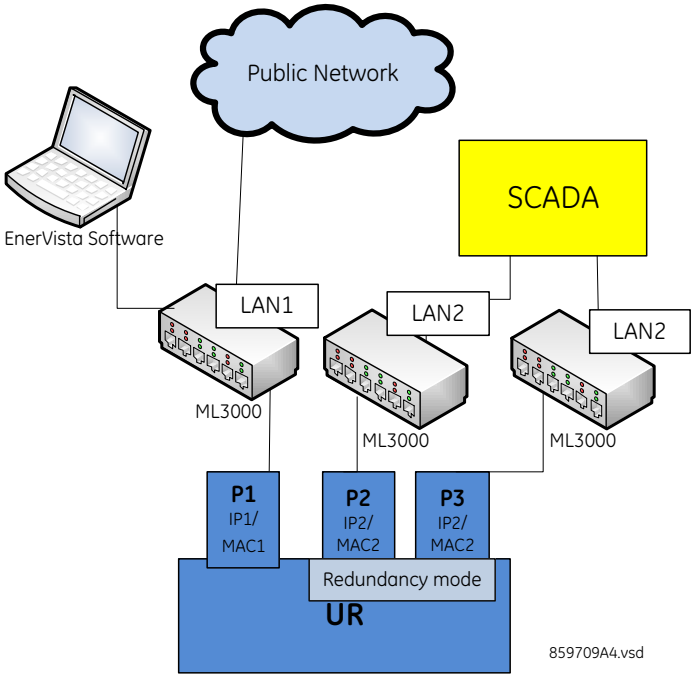

5

Multiple LANS, no redundancy

The following topology provides local configuration/monitoring through EnerVista software on LAN1, to which port 1 (P1) is connected, access to the public network on LAN2, to which port 2 (P2) is connected, and communications with SCADA on LAN3, to which port 3 (P3) is connected. There is no redundancy.

Figure 5-15: Multiple LANS, no redundancy

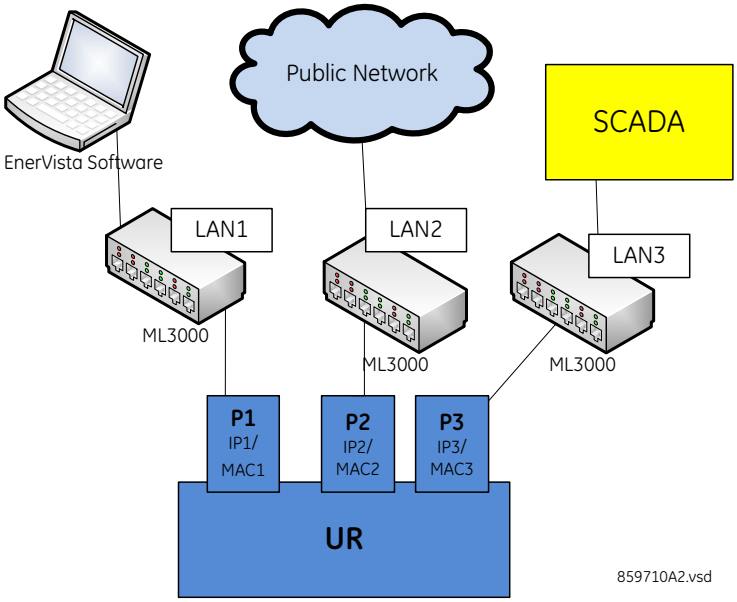

5.3.5.4 Network

As outlined in the previous section, when using more than one Ethernet port, configure each to belong to a different network or subnet using the IP addresses and mask. Configure the network IP and subnet settings before configuring the routing settings.

Follow the IP and subnet mask rules outlined in the Set IP Address in UR section of the Installation chapter.

To obtain a list of all port numbers used, for example for audit purposes, contact GE technical support with substantiating information, such as the serial number and order code of your device.

SETTINGS ⇨ PRODUCT SETUP ⇨⇩ COMMUNICATIONS ⇨⇩ NETWORK 1(3)

■ **NETWORK PORT 1** ■	⇔	**PRT1 IP ADDRESS:** **127.0.0.1**	Range: standard IPV4 address format
	⇩	**PRT1 SUBNET IP MASK:** **255.0.0.0**	Range: standard IPV4 address format
	⇩	**PRT1 FUNCTION:** **Enabled**	Range: Enabled, Disabled
■ **NETWORK PORT 2** ■	⇔	**PRT2 IP ADDRESS:** **127.0.0.1**	Range: standard IPV4 address format
	⇩	**PRT2 SUBNET IP MASK:** **255.0.0.0**	Range: standard IPV4 address format
	⇩	**PRT2 REDUNDANCY:** **None**	Range: None, Failover, PRP Range if no PRP license: None, Failover
	⇩	**PRP MCST ADDR:** **01154E000100**	Range: 01-15-4E-00-01-00 to 01-15-4E-00-01-FF
	⇩	**PRT2 FUNCTION:** **Enabled**	Range: Enabled, Disabled
■ **NETWORK PORT 3** ■	⇔	**PRT3 IP ADDRESS:** **127.0.0.1**	Range: standard IPV4 address format
	⇩	**PRT3 SUBNET IP MASK:** **255.0.0.0**	Range: standard IPV4 address format
	⇩	**PRT3 FUNCTION:** **Enabled**	Range: Enabled, Disabled

The IP addresses are used with the DNP, Modbus/TCP, IEC 61580, IEC 60870-5-104, TFTP, HTTP, and PRP protocols. PRP is explained in its own section later.

Use the front panel to change these settings. When online, the EnerVista software can be used to enable/disable each port only. In the Offline Window area, all settings can be changed except port 2 redundancy (depending on firmware version).

When using GOOSE, in failover or PRP mode, port 3 configuration in the CID file is ignored. The Port 3 ConnectedAP elements has no meaning, as ports 2 and 3 use the port 2 MAC address, IP address, and mask.

PRT1 (2 or 3) IP ADDRESS — This setting sets the port's IPv4 address in standard IPV4 format. This setting is valid on port 3 if port 2 **REDUNDANCY** is set to None.

PRT1 (2 or 3) SUBNET MASK — This setting sets the port's IPv4 subnet mask in standard IPV4 format. This setting is valid on port 3 if port 2 **REDUNDANCY** is set to None.

PRT1 (2 or 3) FUNCTION — This setting enable/disables network communication on the respective port. When the port function is Disabled, the network traffic on this port is disabled. The PRT2 redundancy setting has no effect on this functionality. The change takes effect upon relay restart.

If you disable a port here that is used to communicate between the relay and the software, this can take down all communication between the two. For example, an Ethernet connection set to the IP address of the relay can be disabled and cannot be reached, even when pinging. The port needs to be re-enabled, IP and any gateway addresses need to be checked, and the relay needs to be set to Programmed.

PRT2 REDUNDANCY — Determines if ports 2 and 3 operate in redundant or independent mode. If a license for PRP was purchased, the options are None, Failover, and PRP. If a license for PRP was not purchased, the options are None and Failover. In non-redundant mode (**REDUNDANCY** set to None), ports 2 and 3 operate independently with their own MAC, IP, and mask addresses. If **REDUNDANCY** is set to Failover, the operation of ports 2 and 3 is as follows:

- Ports 2 and 3 use the port 2 MAC address, IP address, and mask
- The configuration fields for IP address and mask on port 3 are hidden
- Port 3 is in standby mode and does not actively communicate on the Ethernet network but monitors its link to the Multilink switch. If port 2 detects a problem with the link, communications is switched to Port 3. Port 3 is, in effect, acting as a redundant or backup link to the network for port 2. Once port 2 detects that the link between itself and the switch is good and that communication is healthy for five minutes, then switching back to port 2 is performed. The delay in switching back ensures that rebooted switching devices connected to the C70, which signal their ports as active prior to being completely functional, have time to completely initialize themselves and become active. Once port 2 is active again, port 3 returns to standby mode.

If **REDUNDANCY** is set to PRP, the operation of ports 2 and 3 is as follows:

- Ports 2 and 3 use the port 2 MAC address, IP address, and mask
- The configuration fields for IP address and mask on port 3 are overwritten with those from port 2. This is visible on the front panel but not displayed in the EnerVista software.
- Port 2 **MCST ADDRESS** field is visible
- The port 2 PTP function still uses only port 2 and the port 3 PTP function still uses only port 3. The relay still synchronizes to whichever port has the best master. When ports 2 and 3 see the same master, as is typically the case for PRP networks, the port with the better connectivity is used.

Behavior for GOOSE messages is as follows:

- If **REDUNDANCY** is set to Failover or PRP, In order to transmit a GOOSE message on port 2, the CID file must be configured to have the corresponding GSE element in both ConnectedAPs S2 and S3. In the EnerVista software, the **TxGOOSE CPU PORT ASSIGNMENT** needs to be "Ports-1,2,3" to transmit GOOSE on both ports 1 and 2, or "Ports-2,3" to have GOOSE only on port 2, with failover/ PRP.
- If **REDUNDANCY** is set to PRP, the port 2 configured GOOSE message is simultaneously transmitted on ports 2 and 3
- If **REDUNDANCY** is set to failover and the port 2 link fails, then only the port 2 configured GOOSE message is transmitted on port 3

NOTE

The two ports must be connected to completely independent LANs with no single point of failure, such as common power supplies that feed switches on both LANs.

When **REDUNDANCY** is set to PRP or failover and the network path with resolved default gateway is broken, then the ARP table needs approximately five seconds to rebuild. The layer 2 protocols (GOOSE and PTP) are not affected. However, the TCP/IP or UDP protocols (MMS connections, DNP3.0, and so on) can require reconnection if their active connection does not ride through re-transmission frames.

For any changes to this setting to take effect, restart the unit.

PRT2 PRP MCST ADDR — This setting allows the user to change the multicast address used by the PRP supervision frames. This setting is available if **REDUNDANCY** is set to PRP. All devices in the same PRP network need to have the same multicast address. Choose an address that does not conflict with another multicast protocol.

5.3.5.5 Far-End Fault Indication (FEFI)

Since 100BASE-FX does not support Auto-Negotiation, a Far-End Fault Indication (FEFI) feature is included since UR 7 that allows for detection of link failures.

The purpose of the Far-End Fault feature is to allow the stations on both ends of a pair of fibers to be informed when there is a problem with one of the fibers. Without the Far-End Fault feature, it is impossible for a fiber interface to detect a problem that affects only its transmit fiber.

When the Far-End Fault feature is supported, a loss of receive signal (link) causes the transmitter to generate a Far-End Fault pattern in order to inform the device at the far end of the fiber pair that a fault has occurred.

When the local receiver again detects a signal, the local transmitter automatically returns to normal operation.

If a Far-End Fault pattern is received by a fiber interface that supports the Far-End Fault feature and it is enabled, it reacts by dropping the link as if there were no signal at all.

If the receiving interface does not support the Far-End Fault feature or has it disabled, an incoming Far-End Fault pattern is ignored.

It is strongly recommended to have switches used for substation automation that support the Far-End Fault feature, especially when UR 7 redundancy Failover is selected for redundancy.

5.3.5.6 Parallel Redundancy Protocol (PRP)

SOFTWARE OPTION

The C70 is provided with optional PRP capability, specified as a software option at the time of ordering.

The Parallel Redundancy Protocol (PRP) defines a redundancy protocol for high availability in substation automation networks. It applies to networks based on Ethernet technology (ISO/IEC 8802-3) and is based on the second edition (July 2012) of IEC 62439-3, clause 4.

PRP is designed to provide seamless recovery in case of a single failure in the network, by using a combination of LAN duplication and frame duplication. Identical frames are sent on two completely independent networks that connect source and destination. Under normal circumstances both frames reach the destination and one of them is sent up the OSI stack to the destination application, while the second one is discarded. If an error occurs in one of the networks and traffic is prevented from flowing on that path, connectivity is provided through the other network to ensure continuous communication. Take care when designing the two LANs, so that no single point of failure (such as a common power supply) is encountered, as such scenarios can bring down both LANs simultaneously.

Figure 5-16: Example of parallel redundant network

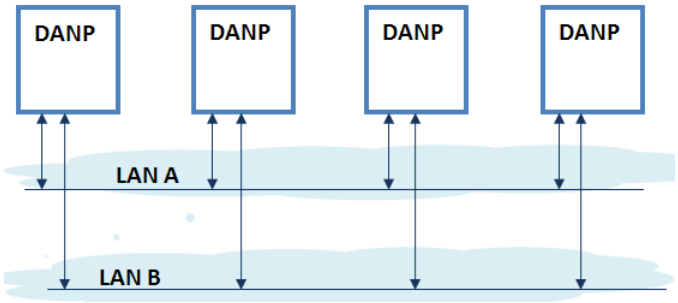

PRP uses specialized nodes called doubly attached nodes (DANPs) for handling the duplicated frames. DANP devices have an additional module, called a Link Redundancy Entity (LRE). LRE is responsible for duplicating frames and adding the specific PRP trailer when sending the frames out on the LAN, as well as making decisions on received frames as to which one is sent up the OSI stack to the application layer and which one is discarded. LRE is responsible for making PRP transparent to the higher layers of the stack.

In addition, there is a second type of specialized device used in PRP networks, called RedBox, with the role of connecting Single Attached Nodes (SANs) to a redundant network.

UR relays implement the DANP functionality. The RedBox functionality is not implemented.

The original standard IEC 62439-3 (2010) was amended to align PRP with the High-availability Seamless Redundancy (HSR) protocol. To achieve this, the original PRP was modified at the cost of losing compatibility with the PRP 2010 version. The revised standard IEC 62439-3 (2012) is commonly referred to as PRP-1, while the original standard is PRP-0. The UR relays support PRP-1.

The relay implements PRP on two of its Ethernet ports, specifically Ports 2 and 3 of the CPU module. Use the previous section (network port configuration) to configure PRP.

PRP is purchased as a separate option. If purchased (valid order code), PRP can be enabled in configuration through a setting available on the network configuration menu, REDUNDANCY, which already has the capability of enabling failover redundancy. The options on this setting must be changed to accommodate two types of redundancy: failover and PRP. When REDUNDANCY is set to either failover or PRP, the ports dedicated for PRP (Ports 2 and 3) operate in redundant mode. In this mode, Port 3 uses the MAC, IP address, and mask of Port 2.

5.3.5.7 IPv4 route table

SETTINGS ⇨ PRODUCT SETUP ⇨⇩ COMMUNICATIONS ⇨⇩ IPv4 ROUTE TABLE 1(6)

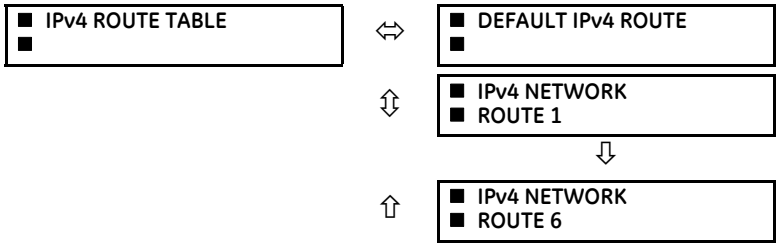

A default route and up to six static routes can be configured.

The default route is used as the last choice when no other route towards a given destination is found.

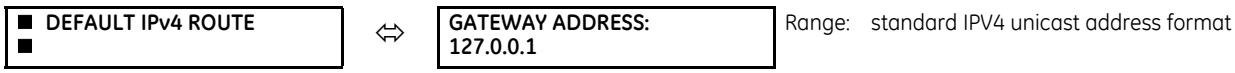

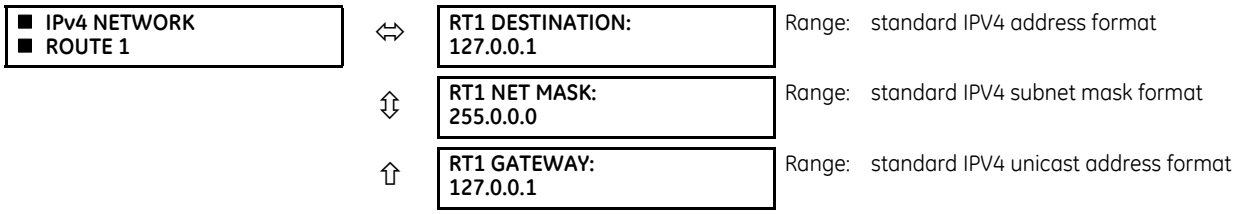

Configure the network IP and subnet settings before configuring the routing settings.

Add and delete static routes

Host routes are not supported at present.

The routing table configuration is available on the serial port and front panel. This is a deliberate decision, to avoid loss of connectivity when remotely configuring the C70.

By default, the value of the destination field is 127.0.0.1 for all static routes (1 to 6). This is equivalent to saying that the static routes are not configured. When the destination address is 127.0.0.1, the mask and gateway also must be kept on default values.

By default, the value of the route gateway address is 127.0.0.1. This means that the default route is not configured.

To add a route:

1. Use any of the static network route entries numbered 1 to 6 to configure a static network route. Once a route destination is configured for any of the entries 1 to 6, that entry becomes a static route and it must meet all the rules listed in the next section, General Conditions to be Satisfied by Static Routes.
2. To configure the default route, enter a default gateway address. Once a default gateway address is configured, it

must be validated against condition 2 of the General Conditions to be Satisfied by Static Routes, where the route gateway must be on a connected network.

To delete a route:

1. Replace the route destination with the default loopback address of 127.0.0.1. When deleting a route, the mask and gateway also must be brought back to default values.
2. Delete the default route by replacing the default gateway with the default value of 127.0.0.1.

General conditions to be satisfied by static routes

The following rules are validated internally:

- The route mask has IP mask format. In binary this needs to be a set of contiguous bits of 1 from left to right, followed by one or more contiguous bits of 0.
- The route destination and mask must match. This can be verified by checking that
  RtDestination and RtMask = RtDestination
  Example of good configuration: RtDestination = 10.1.1.0; Rt Mask = 255.255.255.0
  Example of bad configuration: RtDestination = 10.1.1.1; Rt Mask = 255.255.255.0

The following rules must be observed when you configure static routes:

- The route destination must not be a connected network
- The route gateway must be on a connected network. This rule applies to the gateway address of the default route as well. This can be verified by checking that:
  (RtGwy & Prt1Mask) == (Prt1IP & Prt1Mask) || (RtGwy & Prt2Mask) == (Prt2IP & Prt2Mask) || (RtGwy & Prt3Mask) == (Prt3IP & Prt3Mask)

  where

  & is the bitwise-AND operator

  == is the equality operator

  || is the logical OR operator

Routing behavior compared to previous releases

Prior to release 7.10, UR devices did not have an explicit manner of configuring routes. The only available route was the default route configured as part of the network settings (port gateway IP address). This limited the ability to route to specific destinations, particularly if these destinations were reachable through a different interface than the one on which the default gateway was.

Starting with UR 7.10, up to six static network routes can be configured in addition to a default route. The default route configuration was also moved from the network settings into the routing section.

The figure shows an example of topology that benefits from the addition of static routes.

Figure 5-17: Using static routes

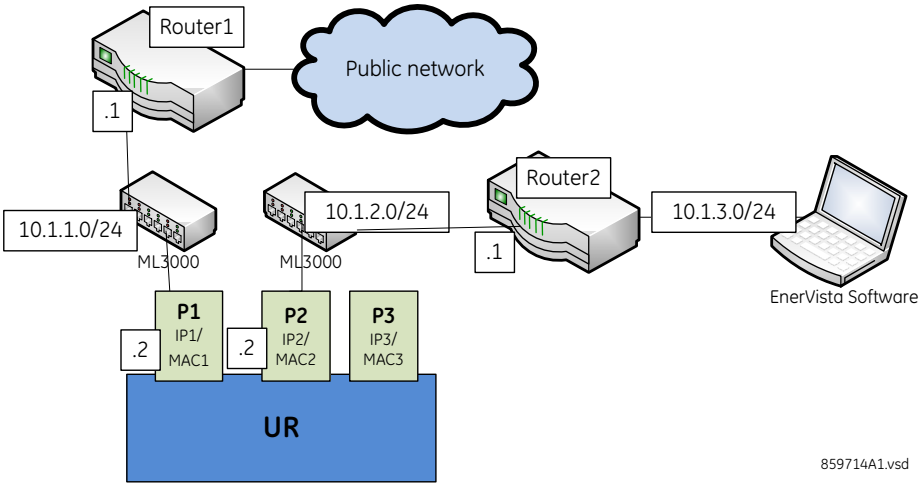

In the figure, the UR connects through the following two Ethernet ports:

- Port 1 (IP address 10.1.1.2) connects the UR to LAN 10.1.1.0/24 and to the Internet through Router1. Router1 has an interface on 10.1.1.0/24 and the IP address of this interface is 10.1.1.1.
- Port 2 (IP address 10.1.2.2) connects the UR to LAN 10.1.2.0/24 and to the EnerVista software through Router2. Router2 has an interface on 10.1.2.0/24 and the IP address of this interface is 10.1.2.1.

5

The configuration before release 7.10 was as follows:

- PRT1 IP ADDRESS = 10.1.1.2
  PRT1 SUBNET IP MASK = 255.255.255.0
  PRT1 GWY IP ADDRESS = 10.1.1.1
  PRT2 IP ADDRESS = 10.1.2.2
  PRT2 SUBNET IP MASK = 255.255.255.0

The behavior before release 7.10 was as follows. When sending packets to EnerVista, the UR noticed that the destination was not on a connected network and it tried to find a route to destination. Since the default route was the only route it knew, it used it. Yet EnerVista was on a private network, which was not reachable through Router1. Hence a destination unreachable message was received from the router.

The configuration starting with release 7.10 is as follows:

- PRT1 IP ADDRESS = 10.1.1.2
  PRT1 SUBNET IP MASK = 255.255.255.0
  PRT2 IP ADDRESS = 10.1.2.2
  PRT2 SUBNET IP MASK = 255.255.255.0
  IPV4 DEFAULT ROUTE: GATEWAY ADDRESS = 10.1.1.1
  STATIC NETWORK ROUTE 1: RT1 DESTINATION = 10.1.3.0/24; RT1 NET MASK = 255.255.255.0; and RT1 GATEWAY = 10.1.2.1

The behavior since release 7.10 is as follows. There is one added static network route to the destination 10.1.3.0/24, where a computer running EnerVista is located. This static route uses a different gateway (10.1.2.1) than the default route. This gateway is the address of Router2, which has knowledge about 10.1.3.0 and is able to route packets coming from the UR and destined to EnerVista.

Show routes and ARP tables

This feature is available on the web page interface, where the main menu contains an additional Communications menu and two submenus:

- Routing Table
- ARP Table

The tables outline the information displayed when the two submenus are selected.

Table 5-7: Routing table information

Field	Description
Destination	The IP address of the remote network to which this route points
Mask	The network mask for the destination
Gateway	The IP address of the next router to the remote network
Interface	Interface through which the specified network can be reached

Table 5-8: IP ARP information

Field	Description
IP Address	The network address that corresponds to Hardware Address
Age (min)	Age, in minutes, of the cache entry. A hyphen (-) means the address is local.
Hardware Address	LAN hardware address, a MAC address that corresponds to network address
Type	Dynamic or Static
Interface	Interface to which this address mapping has been assigned

5.3.5.8 Modbus protocol

SETTINGS ⇨ PRODUCT SETUP ⇨⇩ COMMUNICATIONS ⇨⇩ MODBUS PROTOCOL

■ **MODBUS PROTOCOL** ■	⇔	**MODBUS SLAVE ADDRESS: 254**	Range: 1 to 254 in steps of 1
	⇧	**MODBUS TCP PORT NUMBER(502): 502**	Range: 0 to 65535 in steps of 1

The serial communication ports utilize the Modbus protocol, unless the port is configured for DNP or IEC 60870-5-103 operation. This allows the EnerVista UR Setup software to be used on the port. UR devices operate as Modbus slave devices only.

For more information on the protocol, including the memory map table, see the UR Family Communications Guide.

MODBUS SLAVE ADDRESS — When using the Modbus protocol on the RS232 port, the C70 responds regardless of the **MODBUS SLAVE ADDRESS** programmed. For the RS485 port, each device on the serial bus must have a unique slave address from 1 to 254. Address 0 and addresses from 248 and up are reserved by the Modbus protocol specification, and so their use here is not recommended. Address 0 is the broadcast address to which all Modbus slave devices listen. Addresses do not have to be sequential, but no two devices can have the same address or conflicts resulting in errors occur. Generally, starting at 1, set each device added to the link to use the next higher address. When using Modbus TCP/IP, the client must use the programmed **MODBUS SLAVE ADDRESS** value in the Unit Identifier field.

MODBUS TCP PORT NUMBER — Modbus over TCP/IP can also be used on any of the Ethernet ports. The listening TCP port 502 is reserved for Modbus communications, and only in exceptional cases when **MODBUS TCP PORT NUMBER** is set to any other port. The **MODBUS TCP PORT NUMBER** setting sets the TCP port used by Modbus on Ethernet. A **MODBUS TCP PORT NUMBER** of 0 disables Modbus over TCP/IP, meaning closes the Modbus TCP port. When the port number is changed to 0, the change takes effect when the C70 is restarted. When it is set to 0, use the front panel or serial port to communicate with the relay.

NOTE

Do not set more than one protocol to the same TCP/UDP port number, as this results in unreliable operation of those protocols.

5.3.5.9 Protocol selection

SETTINGS ⇨ PRODUCT SETUP ⇨⇩ COMMUNICATIONS ⇨⇩ PROTOCOL

■ **PROTOCOL** ■	⇔	**SCADA PROTOCOL: DNP 3.0**	Range: DNP 3.0, IEC 60870-5-104, IEC 60870-5-103

⇕	**MMS CONNECTION TIMEOUT: 120 s**	Range: 10 to 7200 in steps of 10
⇧	**IEC61850 EDITION: Edition2**	Range: Edition1, Edition2

The **PROTOCOL** menu allows selection of one of the following protocols: DNP 3.0, IEC60870-104, or IEC60870-103.

SCADA PROTOCOL — This setting selects the SCADA protocol on which the unit communicates, among DNP3.0, IEC 60870-104, and IEC 60870-103, with DNP being the default. Options depend on order code. For any change to take effect, restart the unit.

MMS CONNECTION TIMEOUT — This setting specifies a time delay for the detection of network TCP connection lost. If there is no data traffic on the TCP connection for greater than the time specified by this setting, the connection is terminated. This frees up the connection to be re-used by a client. A setting of 10 seconds disables this timer. The TCP connection then is managed by a standard TCP KeepAlive message sequence. These messages are transmitted every 20 seconds when there is no MMS communication between the relay and the client. If there are no responses to the TCP KeepAlive messages, the connection is closed. For any change to this setting to take effect, restart the unit. The change takes effect for a new connection. For any existing open connection when the change is made, close and re-open the connection. Cycling power to the relay also applies the new setting.

The table shows which of DNP 3.0, IEC 60870-5-104, IEC 60870-5-103, and IEC 61850 protocols are operational on the RS232, RS485, and Ethernet ports. It shows all possible combinations of the **PROTOCOL** and **DNP CHANNEL 1(2) PORT** settings.

Table 5-9: Port and protocol combinations

PROTOCOL setting	DNP CHANNEL 1(2) PORT settings	RS232	RS485	Ethernet
DNP	Channel 1: Eth TCP Channel 2: Eth TCP	Modbus	Modbus	DNP, Modbus, IEC 61850
	Channel 1: Eth TCP Channel 2: none	Modbus	Modbus	DNP, Modbus, IEC 61850
	Channel 1: none Channel 2: Eth TCP	Modbus	Modbus	DNP, Modbus, IEC 61850
	Channel 1: Eth UDP Channel 2: none	Modbus	Modbus	DNP, Modbus, IEC 61850
	Channel 1: Eth TCP Channel 2: RS485	Modbus	DNP	DNP, Modbus, IEC 61850
	Channel 1: Eth TCP Channel 2: RS232	DNP	Modbus	DNP, Modbus, IEC 61850
	Channel 1: Eth UDP Channel 2: RS485	Modbus	DNP	DNP, Modbus, IEC 61850
	Channel 1: Eth UDP Channel 2: RS232	DNP	Modbus	DNP, Modbus, IEC 61850
	Channel 1: RS485 Channel 2: Eth TCP	Modbus	DNP	DNP, Modbus, IEC 61850
	Channel 1: RS232 Channel 2: Eth TCP	DNP	Modbus	DNP, Modbus, IEC 61850
	Channel 1: RS485 Channel 2: RS232	DNP	DNP	Modbus, IEC 61850
	Channel 1: RS232 Channel 2: RS485	DNP	DNP	Modbus, IEC 61850
	Channel 1: RS485 Channel 2: none	Modbus	DNP	Modbus, IEC 61850
IEC 104		Modbus	Modbus	IEC 104, Modbus, IEC 61850
IEC 103		Modbus	IEC 103	Modbus, IEC 61850

IEC61850 EDITION — Switches between Editions 1 and 2 of the IEC 61850 protocol. For Process Bus GOOSE, the setting is fixed at Edition 2. When switching, settings default with the change, except GGIO1, GGIO2, GGIO4, and those for the graphical front panel. A message displays that a reboot is required, which can be done using **Maintenance > Reboot Relay Command**.

5.3.5.10 DNP protocol

SETTINGS ⇨ PRODUCT SETUP ⇨⇩ COMMUNICATIONS ⇨⇩ DNP PROTOCOL

■ DNP PROTOCOL ■	⇔	■ DNP CHANNELS ■	See below
	⇩	DNP ADDRESS: 1	Range: 0 to 65535 in steps of 1
	⇩	■ DNP NETWORK ■ CLIENT ADDRESSES	See below
	⇩	DNP TCP/UDP PORT NUMBER(20000): 20000	Range: 0 to 65535 in steps of 1
	⇩	DNP UNSOL RESPONSE FUNCTION: Disabled	Range: Enabled, Disabled
	⇩	DNP UNSOL RESPONSE TIMEOUT: 5 s	Range: 0 to 60 s in steps of 1
	⇩	DNP UNSOL RESPONSE MAX RETRIES: 10	Range: 1 to 255 in steps of 1
	⇩	DNP UNSOL RESPONSE DEST ADDRESS: 1	Range: 0 to 65519 in steps of 1
	⇩	DNP CURRENT SCALE FACTOR: 1	Range: 0.001, 0.01. 0.1, 1, 10, 100, 1000, 10000, 100000, 1000000, 10000000, 100000000
	⇩	DNP VOLTAGE SCALE FACTOR: 1	Range: 0.001, 0.01. 0.1, 1, 10, 100, 1000, 10000, 100000, 1000000, 10000000, 100000000
	⇩	DNP POWER SCALE FACTOR: 1	Range: 0.001, 0.01. 0.1, 1, 10, 100, 1000, 10000, 100000, 1000000, 10000000, 100000000
	⇩	DNP ENERGY SCALE FACTOR: 1	Range: 0.001, 0.01. 0.1, 1, 10, 100, 1000, 10000, 100000, 1000000, 10000000, 100000000
	⇩	DNP PF SCALE FACTOR: 1	Range: 0.001, 0.01. 0.1, 1, 10, 100, 1000, 10000, 100000, 1000000, 10000000, 100000000
	⇩	DNP OTHER SCALE FACTOR: 1	Range: 0.001, 0.01. 0.1, 1, 10, 100, 1000, 10000, 100000, 1000000, 10000000, 100000000
	⇩	DNP CURRENT DEFAULT DEADBAND: 30000	Range: 0 to 100000000 in steps of 1
	⇩	DNP VOLTAGE DEFAULT DEADBAND: 30000	Range: 0 to 100000000 in steps of 1
	⇩	DNP POWER DEFAULT DEADBAND: 30000	Range: 0 to 100000000 in steps of 1
	⇩	DNP ENERGY DEFAULT DEADBAND: 30000	Range: 0 to 100000000 in steps of 1
	⇩	DNP PF DEFAULT DEADBAND: 30000	Range: 0 to 100000000 in steps of 1
	⇩	DNP OTHER DEFAULT DEADBAND: 30000	Range: 0 to 100000000 in steps of 1
	⇩	DNP TIME SYNC IIN PERIOD: 1440 min	Range: 1 to 10080 min. in steps of 1

⇕	**DNP MESSAGE FRAGMENT SIZE: 240**	Range: 30 to 2048 in steps of 1
⇕	**DNP OBJECT 1 DEFAULT VARIATION: 2**	Range: 1, 2
⇕	**DNP OBJECT 2 DEFAULT VARIATION: 2**	Range: 1, 2, 3
⇕	**DNP OBJECT 20 DEFAULT VARIATION: 1**	Range: 1, 2, 5, 6
⇕	**DNP OBJECT 21 DEFAULT VARIATION: 1**	Range: 1, 2, 9, 10
⇕	**DNP OBJECT 22 DEFAULT VARIATION: 1**	Range: 1, 2, 5, 6
⇕	**DNP OBJECT 23 DEFAULT VARIATION: 1**	Range: 1, 2, 5, 6
⇕	**DNP OBJECT 30 DEFAULT VARIATION: 1**	Range: 1, 2, 3, 4, 5
⇕	**DNP OBJECT 32 DEFAULT VARIATION: 1**	Range: 1, 2, 3, 4, 5, 7
⇕	**DNP NUMBER OF PAIRED CONTROL POINTS: 0**	Range: 0 to 32 in steps of 1
⇕	**DNP TCP CONNECTION TIMEOUT: 120 s**	Range: 10 to 7200 s in steps of 1
⇧	**DNP EVENT TIME BASE: LOCAL**	Range: UTC, LOCAL

5

The Distributed Network Protocol (DNP) allows for the optimization of control and data acquisition between the equipment in the substation and the central control center. The protocol is scalable; that is, it is designed to be compatible with the latest high speed LAN technology yet still be implemented over slower speed serial links.

The DNP improves upon many master-slave protocols by improving overall communication performance requirements and provides time-stamping with millisecond accuracy.

The C70 supports DNP version 3.0.

DNP is enabled when the **SETTINGS ⇨ PRODUCT SETUP ⇨⇩ COMMUNICATIONS ⇨ PROTOCOL** setting is set to DNP 3.0. The C70 can be used as a DNP slave device connected to multiple DNP masters (usually an RTU or a SCADA master station). Since the C70 maintains two sets of DNP data change buffers and connection information, two DNP masters can actively communicate with the C70 at one time.

DNP is not available using the USB port on the graphical front panel.

See the UR Family Communications Guide for more information on DNP.

NOTE

For any change to DNP settings, restart the relay.

The DNP Channels sub-menu is shown.

SETTINGS ⇨ PRODUCT SETUP ⇨⇩ COMMUNICATIONS ⇨⇩ DNP PROTOCOL ⇨ DNP CHANNELS

■ **DNP CHANNELS** ■	⇔	**DNP CHANNEL 1 PORT: NONE**	Range: NONE, COM1 - RS485, COM2 - RS485, FRONT PANEL - RS232, NETWORK - TCP, NETWORK - UDP
	⇧	**DNP CHANNEL 2 PORT: NONE**	Range: NONE, COM1 - RS485, COM2 - RS485, FRONT PANEL - RS232, NETWORK - TCP

The **DNP CHANNEL 1 PORT** and **DNP CHANNEL 2 PORT** settings select the communications port assigned to the DNP protocol for each channel. Once DNP is assigned to a serial port, DNP is the only protocol running on that port; Modbus or IEC 60870-5-103 are disabled. If DNP is assigned to RS485, the protocol must be set to DNP on the serial port configuration as well, for the change to take effect. When the **DNP CHANNEL 1(2) PORT** setting is set to "Network - TCP," the channel 1(2) DNP protocol can be used over TCP/IP on the Ethernet ports. When this value is set to "Network - UDP," the DNP protocol can be used over UDP/IP on channel 1 only. The "Front Panel - RS232" setting does not apply to the graphical front panel; when selected the DNP client cannot establish a connection on a USB port.

NOTE

Do not set more than one protocol to the same TCP/UDP port number, as this results in unreliable operation of those protocols.

The **DNP ADDRESS** setting is the DNP slave address. This number identifies the C70 on a DNP communications link. Assign a unique address to each DNP slave.

The C70 can specify a maximum of five clients for its DNP connections. These are IP addresses for the controllers to which the C70 can connect. The settings follow.

SETTINGS ⇨ PRODUCT SETUP ⇨⇩ COMMUNICATIONS ⇨⇩ DNP PROTOCOL ⇨ DNP NETWORK CLIENT ADDRESSES

■ DNP NETWORK ■ CLIENT ADDRESSES	⇔	CLIENT ADDRESS 1: 0.0.0.0	Range: standard IP address
		⇩	
	⇧	CLIENT ADDRESS 5: 0.0.0.0	Range: standard IP address

The **DNP TCP/UDP PORT NUMBER** setting is for normal DNP operation. To close the port, set the port number to 0.

The **DNP UNSOL RESPONSE FUNCTION** is set to "Disabled" for RS485 applications since there is no collision avoidance mechanism. The **DNP UNSOL RESPONSE TIMEOUT** sets the time the C70 waits for a DNP master to confirm an unsolicited response. The **DNP UNSOL RESPONSE MAX RETRIES** setting determines the number of times the C70 retransmits an unsolicited response without receiving confirmation from the master; a value of "255" allows infinite re-tries. The **DNP UNSOL RESPONSE DEST ADDRESS** is the DNP address to which all unsolicited responses are sent. The IP address to which solicited responses are sent is determined by the C70 from the current TCP connection or the most recent UDP message.

The DNP scale factor settings are numbers used to scale analog input point values. These settings group the C70 analog input data into the following types: current, voltage, power, energy, power factor, and other. Each setting represents the scale factor for all analog input points of that type. For example, if the **DNP VOLTAGE SCALE FACTOR** setting is set to "1000," all DNP analog input points that are voltages are returned with values 1000 times smaller (for example, a value of 72000 V on the C70 is returned as 72). These settings are useful when analog input values must be adjusted to fit within certain ranges in DNP masters. Note that a scale factor of 0.1 is equivalent to a multiplier of 10 (that is, the value is 10 times larger).

The **DNP DEFAULT DEADBAND** settings determine when to trigger unsolicited responses containing analog input data. These settings group the C70 analog input data into the following types: current, voltage, power, energy, power factor, and other. Each setting represents the default deadband value for all analog input points of that type. For example, to trigger unsolicited responses from the C70 when any current values change by 15 A, the **DNP CURRENT DEFAULT DEADBAND** setting is set to "15." Note that these settings are the deadband default values. DNP object 34 points can be used to change deadband values, from the default, for each individual DNP analog input point.

NOTE

The C70 relay does not support energy metering. As such, the **DNP ENERGY SCALE FACTOR** and **DNP ENERGY DEFAULT DEADBAND** settings are not applicable.

The **DNP TIME SYNC IIN PERIOD** setting determines how often the Need Time Internal Indication (IIN) bit is set by the C70. Changing this time allows the DNP master to send time synchronization commands more or less often, as required.

The **DNP MESSAGE FRAGMENT SIZE** setting determines the size, in bytes, at which message fragmentation occurs. Large fragment sizes allow for more efficient throughput; smaller fragment sizes cause more application layer confirmations to be necessary, which provides more robust data transfer over noisy communication channels.

NOTE

Check the "DNP Points Lists" C70 web page to view the analog inputs and/or binary inputs points lists. This page can be viewed with a web browser by entering the IP address of the C70 Ethernet port employed to access the C70 Main Menu, then by clicking the **Device Information Menu** item, then the **DNP Points Lists** item.

The **DNP OBJECT 1 DEFAULT VARIATION** to **DNP OBJECT 32 DEFAULT VARIATION** settings select the DNP default variation number for object types 1, 2, 20, 21, 22, 23, 30, and 32. The default variation refers to the variation response when variation 0 is requested and/or in class 0, 1, 2, or 3 scans. See the DNP Implementation section in the UR Family Communications Guide.

The DNP binary outputs typically map one-to-one to IED data points. That is, each DNP binary output controls a single physical or virtual control point in an IED. In the C70 relay, DNP binary outputs are mapped to virtual inputs. However, some legacy DNP implementations use a mapping of one DNP binary output to two physical or virtual control points to support the concept of trip/close (for circuit breakers) or raise/lower (for tap changers) using a single control point. That is, the DNP master can operate a single point for both trip and close, or raise and lower, operations. The C70 can be configured to support paired control points, with each paired control point operating two virtual inputs. The **DNP NUMBER OF PAIRED CONTROL POINTS** setting allows configuration of 0 to 32 binary output paired controls. Points not configured as paired operate on a one-to-one basis.

The **DNP TCP CONNECTION TIMEOUT** setting specifies a time delay for the detection of dead network TCP connections. If there is no data traffic on a DNP TCP connection for greater than the time specified by this setting, the connection is aborted by the C70. This frees up the connection to be re-used by a client.

NOTE

For any change to DNP settings, restart the relay.

5

5.3.5.11 DNP / IEC 60870-5-104 point lists

SETTINGS ⇨ PRODUCT SETUP ⇨⇩ COMMUNICATIONS ⇨⇩ DNP / IEC104 POINT LISTS

■ DNP / IEC104 ■ POINT LISTS	⇔	■ BINARY INPUT / MSP ■ POINTS	See below
	⇧	■ ANALOG INPUT / MME ■ POINTS	See below

Up to 256 binary and up to 256 analog input points for the DNP protocol, or the MSP and MME points for IEC 60870-5-104 protocol, can be configured. The value for each point is user-programmable and can be configured by assigning FlexLogic operands for binary inputs / MSP points or FlexAnalog parameters for analog inputs / MME points.

The menu for the binary input points (DNP) or MSP points (IEC 60870-5-104) follows.

SETTINGS ⇨ PRODUCT SETUP ⇨⇩ COMMUNICATIONS ⇨⇩ DNP / IEC104 POINT LISTS ⇨ BINARY INPUT / MSP POINTS

■ BINARY INPUT / MSP ■ POINTS	⇔	Point: 0 Off	Range: FlexLogic operand
	⇧	Point: 1 Off	Range: FlexLogic operand
		⇩	
	⇧	Point: 255 Off	Range: FlexLogic operand

Up to 256 binary input points can be configured for the DNP or IEC 60870-5-104 protocols. The points are configured by assigning an appropriate FlexLogic operand. See the Introduction to FlexLogic section in this chapter for the range of assignable operands.

Changes to the DNP / IEC 60870-5-104 point lists take effect when the C70 is restarted.

The menu for the analog input points (DNP) or MME points (IEC 60870-5-104) follows.

SETTINGS ⇨ PRODUCT SETUP ⇨⇩ COMMUNICATIONS ⇨⇩ DNP / IEC104 POINT LISTS ⇨⇩ ANALOG INPUT / MME POINTS

■ ANALOG INPUT / MME ■ POINTS	⇔	Point: 0 Off	Range: any FlexAnalog parameter
	⇩	Point: 1 Off	Range: any FlexAnalog parameter
		⇩	
	⇧	Point: 255 Off	Range: any FlexAnalog parameter

Up to 256 analog input points can be configured for the DNP or IEC 60870-5-104 protocols. The analog point list is configured by assigning an appropriate FlexAnalog parameter to each point. See the FlexAnalog Parameters section in Appendix A for the range of assignable parameters.

Changes to the DNP / IEC 60870-5-104 point lists take effect when the C70 is restarted.

NOTE

The DNP / IEC 60870-5-104 point lists always begin with point 0 and end at the first "Off" value. Since DNP / IEC 60870-5-104 point lists must be in one continuous block, any points assigned after the first "Off" point are ignored.

5.3.5.12 IEC 61850 protocol

SOFTWARE OPTION

The C70 is provided with optional IEC 61850 communications, specified as a software option at the time of ordering.

The IEC 61850 settings are accessible in EnerVista software or a substation configuration language (SCL) generating tool. The path is **Settings > Product Setup > Communications > IEC 61850** or **Settings > IEC 61850**. The settings are not accessible from the front panel of the device.

NOTE

IEC 61850 messaging can form part of protection schemes. Consider IEC 61850 settings with the same criticality as protection element settings. To ensure reliable performance of protection schemes utilizing IEC 61850 messaging, route IEC 61850 traffic on a separate port from SCADA communications, or use redundant, independent ports, and a high-speed network recovery method, such as PRP.

Overview

IEC 61850 is a series of international standards and technical reports applicable to power utility automation systems. It includes semantics, abstract communication services, specific communication services, performance specifications, network engineering guidelines, configuration description methodologies, and engineering processes. The standard enables interoperability among intelligent electronic devices (IEDs) from different suppliers and interoperability among software configuration tools from different suppliers. Interoperability in this case is the ability for IEDs to operate on the same network or communication path sharing information and commands, and for configuration tools to understand each other's configuration files.

The UR family supports a large subset of IEC 61850 features. These are detailed in the UR Family Communications Guide and include the information model, GOOSE publish, GOOSE subscribe, buffered report server, unbuffered report server, and Manufacturing Message Specification (MMS) query, read, write, and control services. In addition, the URs and their EnerVista UR Setup software support IEC 61850 Substation Configuration Language (SCL) file import/export and merging.

Many settings of UR protection, control, and monitoring elements, that is to say elements that are not concerned with the IEC 61850 protocol, can nevertheless be accessed via IEC 61850. These settings are documented elsewhere in this Settings chapter. This section of the Settings chapter deals solely with the settings that configure the IEC 61850 protocol itself.

The maximum number of simultaneous clients supported by the UR family is five.

IEC 61850 Editions 1 and 2

This release supports IEC 61850 Edition 1 and Edition 2. The default is Edition 2.

Select IEC 61850 Edition 1 or Edition 2 under **Settings > Product Setup > Communications > Protocol**. When a non-HardFiber Process Bus Module is present, only Edition 2 is used. Switching defaults the IEC 61850 settings, except GGIO1, GGIO2, GGIO4, and those for the graphical front panel. When a message displays that a reboot is required, use **Maintenance > Reboot Relay Command**.

Edition 2.0 is used with certain modifications according to IEC/TR 61850-90-5. Only edition 2.0 61850 configuration tools can interoperate with Edition 2.0 devices, such as the UR 7.3x, 7.4x, or 7.6x release. When using Edition 2, the UR release uses Edition 2.0 SCL, which differs from Edition 1.0 SCL.

Fixed GOOSE, GSSE, and Edition 1 report services are not supported beyond version 7.2x. Configure UR devices using these features to use configurable GOOSE to communicate with a 7.3x or later device.

When set to Edition 1

- The test flag in the Tx GOOSE message header is set to TRUE when the **TEST MODE FUNCTION** is set to Test or Test-Blocked
- The test flag in the received GOOSE message header is not validated
- Routable GOOSE is not supported
- Process Bus Module is not supported (order code 85, 86, or 87)
- Process Bus GOOSE is not supported
- The FlexLogic category does not display in the IEC 61850 panels in the EnerVista UR Setup software
- With SCL file import, for Edition 1 the IP address in the ConnectedAP element must match one IP address of the device, while for Edition 2 one of the three IP addresses in the ConnectedAP element must match

The fields that display in the software depend on the Edition selected and the C70. Differences are noted in the sections that follow. If required, consult the Model Implementation Conformance Statement (MICS) section of the UR Family Communications Guide to understand what applies to your setup.

EnerVista setup for IEC 61850

The EnerVista UR Setup software provides the interface to configure C70 for the IEC 61850 protocol. This section describes the interface. The software also supports import/export and merging of IEC 61850 Substation Configuration Language (SCL) files as documented in the UR Family Communications Guide.

The IEC 61850 settings cannot be accessed through the UR front panel and are instead accessible with the UR EnerVista Setup software, via MMS query, read, and write services, or via 61850 SCL file transfer. Accordingly, whereas other settings are presented in this manual as they appear on the front panel, IEC 61850 settings are presented as they appear in the software. See the UR Family Communications Guide for MMS and SCL access. Note that if you update the IEC 61850 settings in the EnerVista software by writing to them by MMS while the corresponding IEC 61850 panel is open in EnerVista, you need to close then open the panel in EnerVista for the correct readings to display.

The IEC 61850 protocol settings are accessed through software panels that are selected either in the **Online Window** area (see figure) or the **Offline Window** area in the EnerVista software.

The EnerVista software also includes an interface that is compatible with firmware versions 5.0 to 7.2 to configure subscribers. Use the Simplified GOOSE Configurator in the Offline Window area.

Figure 5-18: IEC 61850 panel example in EnerVista software (Edition 2)

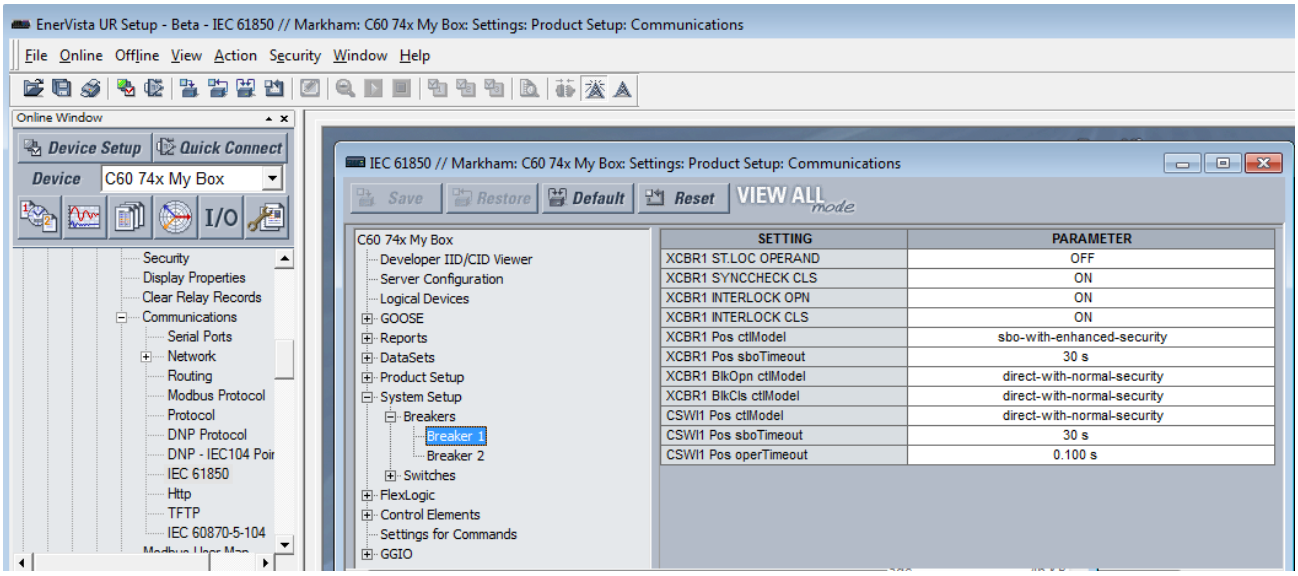

The IEC 61850 window is divided into a navigation pane on the left and a settings panel on the right. You expand and click an option on the left to display its panel on the right. The following figure shows an example for Server Configuration. The **SETTING** column contains the names of the settings, and the **PARAMETER** column is used to enter the settings. Hovering the mouse over a setting name displays a tool-tip showing the 61850 information model name of the setting or its location in SCL files.

The content displayed varies with UR firmware version. For example the version 7.4 fields shown differ from the version 7.9 fields.

5

Figure 5-19: IEC 61850 panel (Edition 2)

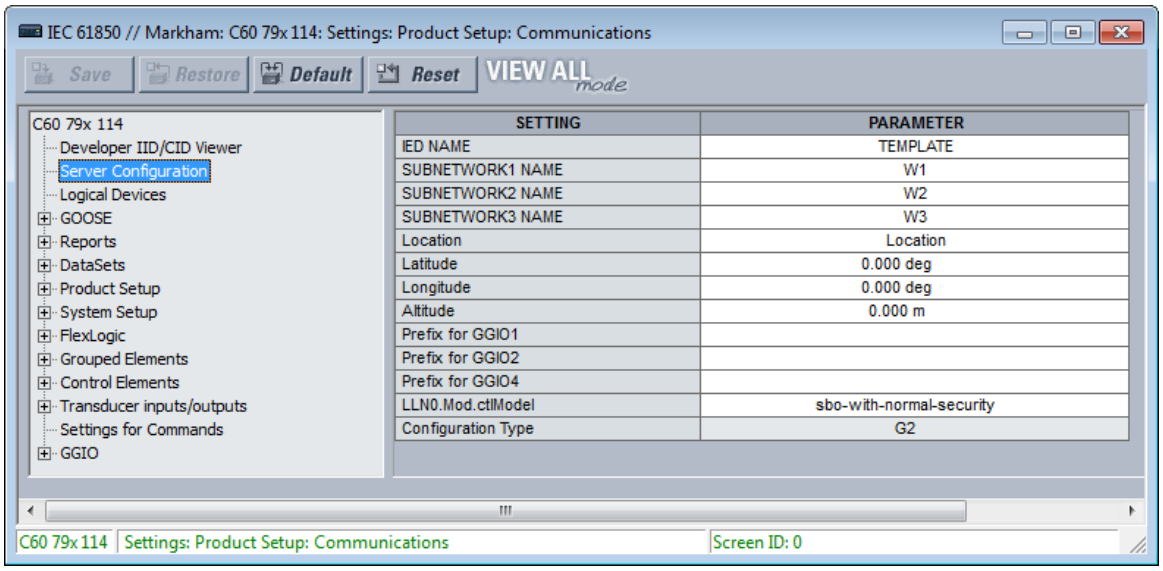

Opening the IEC 61850 window while online causes the EnerVista UR Setup software to retrieve and import an SCL file from the C70. This System Configuration Description (SCD) file contains all the settings in the UR at the time of the file request, both those that are mapped into the IEC 61850 information model (that is, the "public" sections) and those that are not in the model (that is, the "private" section). The software imports all of these settings into the current session, not just those in

the IEC 61850 window. To avoid loss of any unsaved setting changes made in other panels during the current session, all other panels for the C70 must be closed before the IEC 61850 panel opens, and the software prompts for this when required. Panels for other devices can be open concurrently to facilitate parameter coordination.

When CyberSentry security is enabled, editable settings depend on the user role logged in. For example, an Administrator and Engineer can change settings. If prompted for a "Settings password," it means the Administrator or Engineer password.

The **Restore** button restores settings in the window to their last saved values. The **Default** button reverts settings in the window to factory default values or Oscillography, Data Logger, or FlexLogic Equation Editor pre-configured values. The **Reset** button reverts all IEC 61850 settings to the factory default values, not just the current window. (In other settings windows, the button reverts settings in the window to factory default values.)

When a setting is enabled, its panel continues to read Disabled until relaunched. There is no polling capability to update automatically the IEC 61850 readings, so the panel needs to be closed then opened for the correct status to display. Good practice is to close any panel not in use because changes being made by other users are reflected only upon relaunch of the panel.

Some of the IEC 61850 settings use floating point data, which guarantees accurate representation of real numbers up to seven digits. Numbers with more than seven digits are approximated within a certain precision. This can result in differences between what is entered and what is saved, and can result in differences shown on a settings comparison report.

Create CID and settings files

A configured IED description (CID) file is created when settings are sent to the device, for example from the Offline Window area. A CID file can be created by right-clicking a device in the Offline Window area and selecting the **Save As** option.

When the **Save** button is clicked in the online IEC 61850 window, the software prepares a CID file containing all the settings of the device and sends the CID file to the device. Upon receipt, the C70 checks the CID file for correctness, going out of service, then back into service when the CID file is accepted. The software displays a message when the C70 is running the new settings, confirming successful transfer. This process can take a minute or so due to the amount of processing required by the software and the C70.

When the **Save** button is clicked in the offline IEC 61850 window, the software saves to local storage, for example the hard drive, a .urs file containing all settings of the device.

View IID/CID files

The file types are described as follows:

- IID — Instantiated IED capability description file — Actual settings on UR
- CID — Configured IED description file — Settings sent to the UR (may or may not contain the present settings)

The IID file type applies to IEC 61850 Edition 2 only.

IID and CID files are viewable. For example, after modifying settings in the IEC 61850 panels and clicking **Developer IID/ CID Viewer** in the software, a CID file generates and an SCL Viewer shows the updated CID file content. There are no edit or save functions; use instead the Back Up and Restore Settings instructions later in this document to save the files.

Searches are case insensitive.

Figure 5-20: View CID settings file (Edition 2)

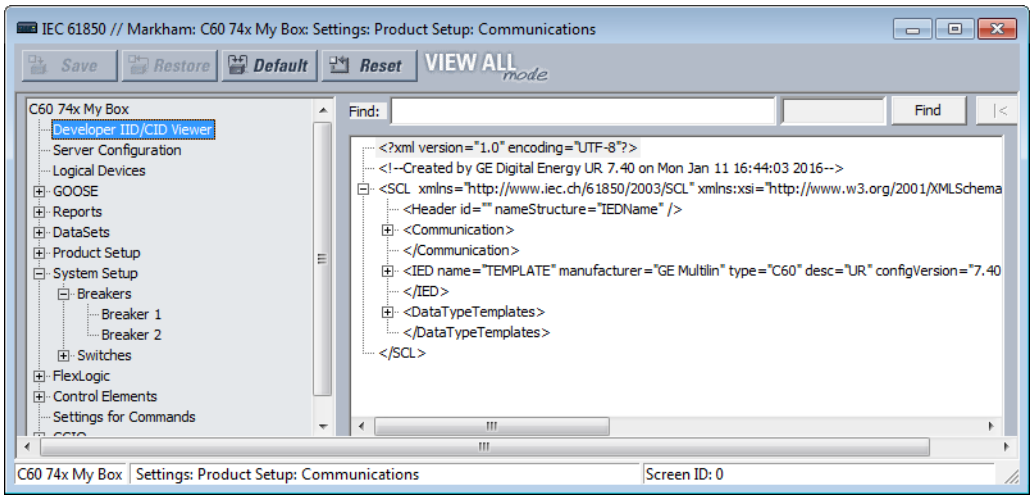

Server configuration

The Server Configuration panel contains IEC 61850 settings relevant to the server functions of the IED implementation.

The path is **Settings > Product Setup > Communications > IEC 61850 > Server Configuration**.

The following settings are available, where <iedName> is a syntactic variable representing the present value of the **IED NAME** setting. The settings vary with firmware version, IEC 61850 edition, and device capability.

IED NAME

Range: 1 to 58 VisibleString characters
Default: TEMPLATE

The value entered sets the name used by IEC 61850 for the C70. An IED name unique within the network must be entered for proper operation. Valid characters are upper and lowercase letters, digits, and the underscore (_) character. The first character must be a letter.

The **IED NAME** and the **Product LD inst name** comprise the <LDName> for a product. The longest LD inst are "Master" and "System" at six characters, with Master being fixed and the others configurable with the configurable Logical device feature. So the **IED NAME** is restricted to 58 characters to meet a 64 character limit.

SUBNETWORK1(5) NAME

Range: 0 to 255 ASCII characters
Default: W1, W2, W3, W4, W5

Subnetworks 1 to 3 display for Editions 1 and 2. Subnetworks 4 and 5 display for Edition 2 with Process Bus Module.

When importing an SCL file:

- Subnetwork 1 to 3 names are identified by the contained ConnectedAP element of the target IED
- If a ConnectedAP element is missing, the respective subnetwork name uses the default value
- When the IEC 61850 server Edition is set to 1 (under **Product Setup > Communications > Protocol**), one ConnectedAP is available in the SCL file. Only the respective subnetwork name is populated and editable. The rest of the subnetwork names are read-only with default values. After importing an Edition 1 SCL file, you can select the Access Point that needs to be populated from the Edition 1 SCL file and you can edit the subnetwork name in the EnerVista UR Setup software.
- Subnetwork 1 to 3 names need to be unique

When exporting an SCL file:

- Subnetwork 1 to 3 names are preserved
- When the IEC 61850 server Edition is set to 1, the selected Access Point and respective subnetwork names are populated

Access Point

Range: S1, S2, S3
Default: S1

This setting applies to IEC 61850 Edition 1. It is the subnetwork.

Location

Range: 0 to 255 ASCII characters
Default: Location

The value entered sets the value of the data attribute <LDName>/LPHD1.PhyNam.location. This data attribute is provided by the protocol to allow the user to declare where the equipment is installed.

Latitude

Range: -90.000 to 90.000 degrees in steps of 0.001 degree
Default: 0.000 deg

The value entered sets the value of the data attribute <LDName>/LPHD1.PhyNam.latitude. This data attribute is provided by the protocol to declare the geographical position of the device in WGS84 coordinates -latitude. Negative values indicate a southern latitude. WGS refers to the world geodetic system, which is used in global positioning systems (GPS), and 84 is the current version of the standard.

Longitude

Range: -180.000 to 180.000 degrees in steps of 0.001 degree
Default: 0.000 deg

The value entered sets the value of the data attribute <LDName>/LPHD1.PhyNam.longitude. This data attribute is provided by the protocol to declare the geographical position of the device in WGS84 coordinates -longitude. Negative values indicate a western longitude.

Altitude

Range: 0 to 10,0000 m in steps of 1 m
Default: 0.000 m

The value entered sets the value of the data attribute <LDName>/LPHD1.PhyNam.altitude. This data attribute is provided by the protocol to declare the geographical position of the device in WGS84 coordinates - altitude.

Prefix for GGIO1

Range for Edition 2: 0 to 11 VisibleString characters
Range for Edition 1: 0 to 6 VisibleString characters
Default:

This setting sets the LN Prefix of the FlexLogic operand interface logical node GGIO1 that is described in the GGIO1 section later. Valid characters are upper and lowercase letters, digits, and the underscore (_) character. The first character must be a letter. The software does not allow entry of a prefix that duplicates any other GGIO1 prefix that is used by the product, such as ConIn and ConOut.

Prefix for GGIO2

Range for Edition 2: 0 to 11 VisibleString characters
Range for Edition 1: 0 to 6 VisibleString characters
Default:

This setting sets the LN Prefix of the Virtual Inputs Interface logical node GGIO2 that is described in the GGIO2 section later. Valid characters are upper and lowercase letters, digits, and the underscore (_) character. The first character must be a letter. The software does not allow entry of a prefix that duplicates any other GGIO2 prefix that is used by the product.

Prefix for GGIO4

Range for Edition 2: 0 to 11 VisibleString characters
Range for Edition 1: 0 to 6 VisibleString characters
Default:

This setting sets the LN Prefix of the FlexAnalog operand interface logical node GGIO4 that is described in the GGIO4 section later. Valid characters are upper and lowercase letters, digits, and the underscore (_) character. The first character must be a letter. The software does not allow entry of a prefix that duplicates any other GGIO4 prefix that is used by the product.

LLN0.Mod.ctlModel

Range: status-only, direct-with-normal-security, sbo-with-normal-security
Default: sbo-with-normal-security

This setting specifies the control service that clients must use to control the **TEST MODE FUNCTION** / **IED MODE** of the C70. An "on" control to <LDName>/LLN0.Mod changes **TEST MODE FUNCTION** to Disabled, a test control changes it to Test, and a test/blocked control changes it to Test-Blocked.

Configuration Type

Range: G2, E3-2.0
Default: G2

This setting is read only. It specifies the method used to describe GOOSE subscription configuration in SCL. See the UR Family Communications Guide for details. In the G2 mode, the CID file contains IED elements for IEDs subscribed to by this IED containing GOOSE subscription information. In the E3 2.0 mode, the CID file has only one IED element and GOOSE subscription information is coded in data objects in the standard LGOS logical node used to monitor reception of the subscribed GOOSE. UR 7.30 or later accepts either mode. The set value is for the entire EnerVista installation and is preserved between sessions. To change this global field, click **File > Preferences** and access the IEC 61850 panel; the device does not need to be connected.

5

Logical devices

The Logical Devices panel contains IEC 61850 settings relevant to the configurable logical devices feature, wherein logical device naming can be reconfigured and logical nodes re-assigned.

The path is **Settings > Product Setup > Communications > IEC 61850 > Logical Devices**.

Figure 5-21: Default IEC 61850 Logical Devices panel with devices middle and nodes right (Edition 2)

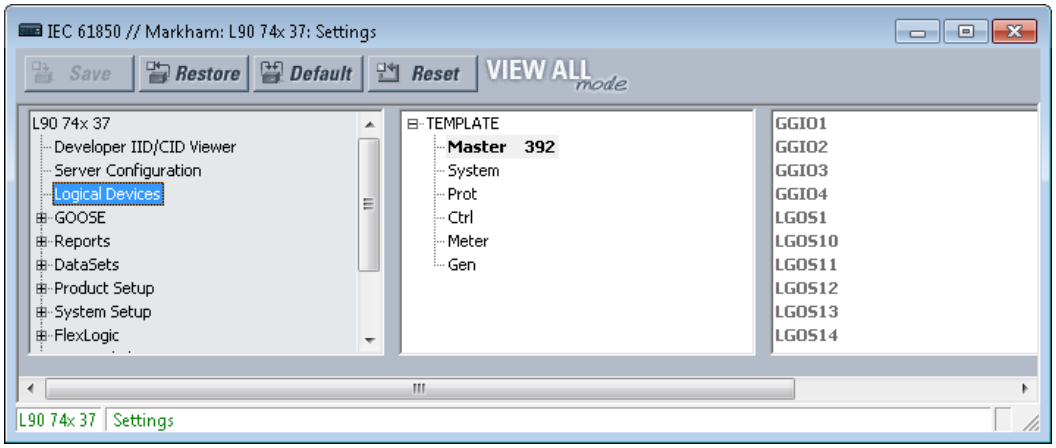

To configure logical devices and nodes:

1. Right-click an entry and edit an existing device, add a new one, or move a logical node. The rest of this section explains the functions.

The default logical device categories are as follows:

- **Master** — Communications, including GOOSE, reports, Remote I/O, Virtual Inputs, Modbus, DNP, and setting group control
- **System** — Power system devices: breakers, switches, CTs, VTs, and so on, including interfaces to these, such as AC inputs, contact I/O, transducer I/O, HardFiber I/O
- **Prot** — Protection and protection-related functions
- **Ctrl** — Control and monitoring functions
- **Meter** — Metering and measurement functions
- **Gen** — FlexLogic, Virtual Outputs, non-volatile latches, FlexElements, recording (for example oscillography), security, front panel, clock
- **PBus** — UR Process Bus Module functions, such as SV subscription, AC Banks, and process bus Time Synchronization. Displays when order code includes a Process Bus Module. Logical device is read-only.

For the Master logical device, the following logical nodes are read-only:

- The LLN0 in the Master logical device, which includes setting group, GOOSE and report control blocks, and datasets
- LPHD1 — Models common issues for physical devices
- GGIO1 — For unmapped FlexLogic operands
- GGIO2 — For Virtual Input control
- GGIO3 — For RxGOOSE Inputs
- GGIO4 — For unmapped FlexAnalog operands
- LGOS logical nodes — For GOOSE subscription

The Logical Devices panel has middle and right panes. The middle pane has a list of the instantiated logical devices in the sequence that they appear in SCL, with one device selected. The right pane has a list of the logical nodes presently assigned to the selected logical device in lexicographic order by logical node name.

In the middle pane logical devices are shown with their product-related name, followed in brackets by their function-related ldName, and followed by the value of their confRev. In the following example, by right-clicking and editing, the Protection logical device has been set to instance name "Prot," the function-related name "Feeder1Prot" and the configuration revision "2016-03-07 08:46." The text is clipped on the right if the line is longer than the available width. The next paragraphs explain how to do this setup.

Figure 5-22: Protection logical node selected

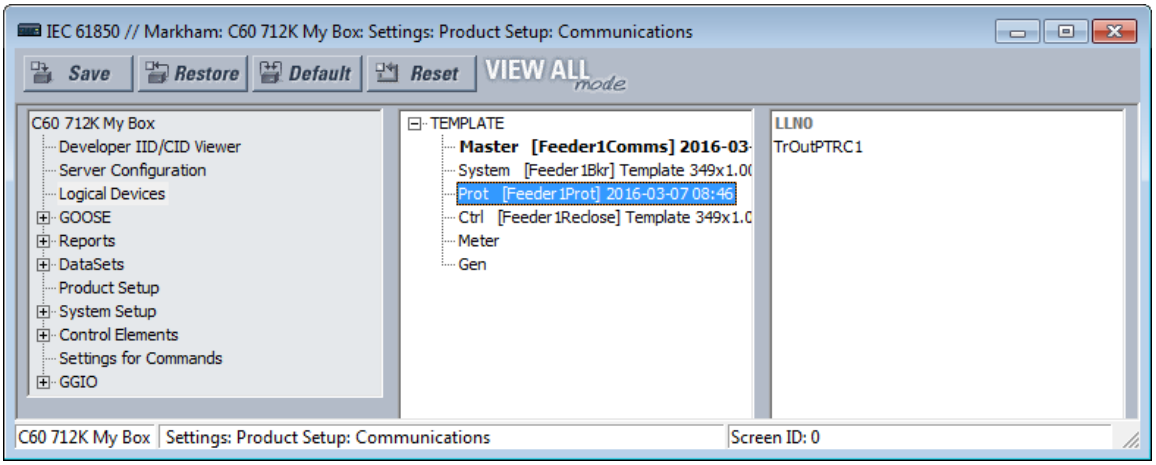

Right-clicking a logical device displays the menu that allows insertion of a new logical device immediately below the selected one, deletion of the selected logical device, or editing the selected logical device's parameters. The insert option is disabled and greyed-out if there are already 16 logical devices instantiated. The delete option is disabled and greyed-out if the selected logical device is Master or it contains any logical nodes other than LLN0.

Figure 5-23: Menu for logical node

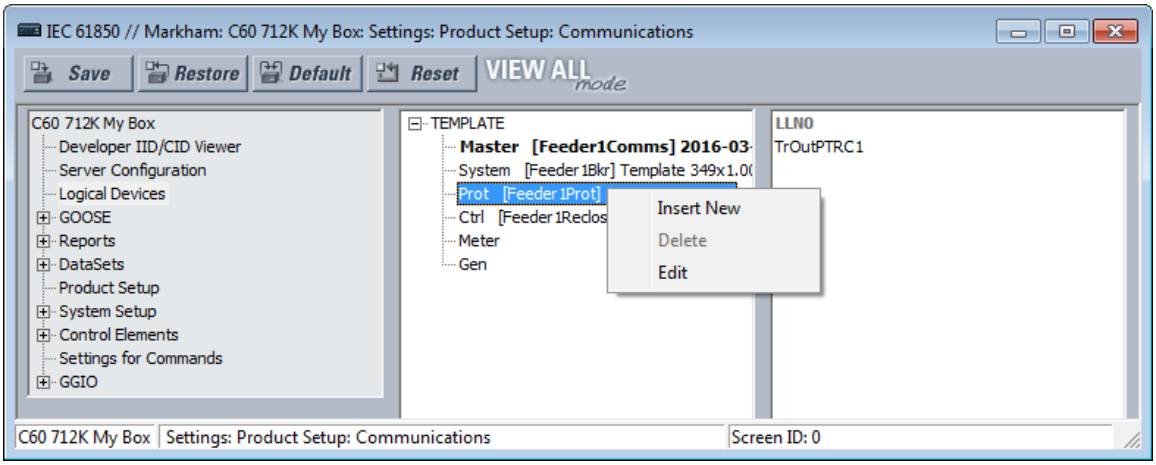

If the insert option is selected, or the edit option is selected for other than the Master logical device, a logical device parameters edit dialog opens.

Figure 5-24: Insert new logical node (Edition 2)

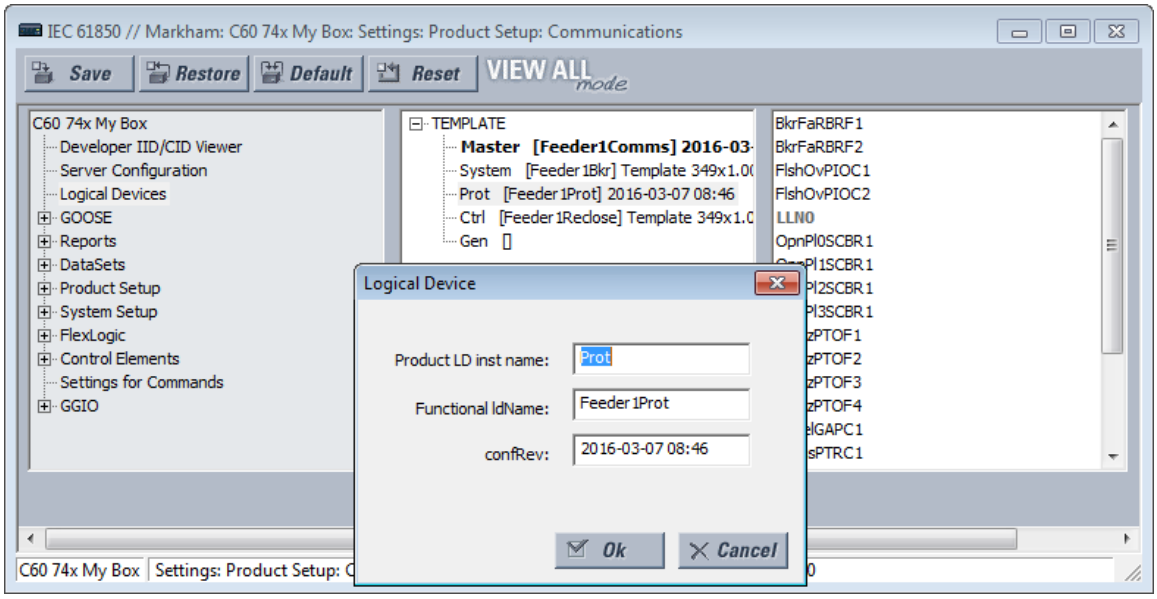

If the edit option is selected for the Master logical device, the **Product LD inst name** setting is not editable.

Figure 5-25: Edit logical node

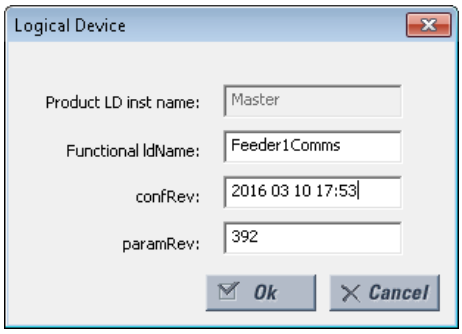

When the **Ok** button is clicked, the entered values for **Product LD inst name** and **Functional ldName** are checked for uniqueness within the UR, and they are updated in the pane.

The settings are explained as follows, where <iedName> is a syntactic variable representing the present value of the **IED NAME** setting. When adding or editing a logical device entry, these are the fields that need to be completed.

NOTE

Customized logical nodes are not saved in the URS file.

5

Product LD inst name

Range: 1 to 64 VisibleString characters

Default: as per the following table

Each logical device has this setting. The value is fixed at "Master" in the first logical device and configurable in all others. Valid characters are upper and lowercase letters, digits, and the underscore (_) character. The first character must be a letter. The entered value sets the logical device inst name. Each logical device inst name is required to be unique within the device, and it cannot be blank. Also, if the corresponding functional ldName setting is blank, the concatenation of the IED name and the logical device inst name must form an LDName that is unique within the network for proper operation. It is recommended that the length of the IED NAME plus the length of this setting be not greater than 64 to respect the requirements of IEC 61850 7 2:2010 22.2 for LDName.

The factory default configuration is for six logical devices with Product LD inst name settings and logical node assignments as per the following table.

Table 5-10: Factory default logical nodes

Default logical device inst name	Contains logical nodes modeling...
Master (root logical device; name is fixed)	communications, including GOOSE, reports, Remote I/O, Virtual Inputs, Modbus, DNP, and so on. Setting group control. This is the root logical device. To comply with IEC 61850 7 1 Ed2 clause 6.4.5.1, all group L logical nodes (logical nodes with class names begin with "L"), except LLN0, belonging to this IED are in this logical device.
Protection (Prot)	protection functions
Control (Ctrl)	control and monitoring functions
System	power system devices: breakers, switches, CTs, VTs, and so on, including interface to these such as AC inputs, contact I/O, transducer I/O, HardFiber I/O
Metering (Meter)	metering and measurement, including Signal Sources
General (Gen)	FlexLogic, virtual outputs, non-volatile latches, FlexElements, FlexMath, recording (for example oscillography), security, front panel, clock
Process Bus (PBus)	non-HardFiber Process Bus Module when present

Functional ldName

Range: 0 to 64 VisibleString characters

Default: empty string

Each logical device has this setting. The value is configurable in all logical devices. Valid characters are upper and lowercase letters, digits, and the underscore (_) character. If the number of characters entered is greater than zero, the setting sets the value of the function-related name used in communications. If an ldName is entered, it must form an LDName that is unique within the network for proper operation. The standard recommends choosing this name according to IEC 81346-1. If the number of characters entered is zero, no function-related name is defined.

NOTE

Throughout the remainder of this IEC 61850 section, <LDName> is a syntactic variable representing the present LDName of the master logical device. In other contexts LDName can refer to some other logical device. Depending on its context, <LDName> can be a product-related name or a function-related name.

configRev

Range: 0 to 255 ASCII characters

Default:

This data attribute is provided by the protocol to declare changes to the semantic of the data model of the UR. The intent is that the user changes Master configRev each time that the semantic or data model changes, so that clients can readily detect the change. A semantic change is a logical node getting a new semantic use; for example, an instance of logical node CSWI is now serving a different physical switch, or an instance of a logical node PDIS is now used for another zone. A data model change is a change in the presence of logical nodes, data objects, data attributes, or instance names.

The scope of Maser configRev is the entire relay configuration, as the Master logical device is the root logical device. Similar settings are provided for the other logical nodes; the scope of these other configRev settings is limited to the corresponding logical device configuration.

paramRev

Range: -2,147,483,648 to 2,147,483,647

Default: 0

The configurable data attribute paramRev has a scope that includes the entire device, and thus is modified whenever any setting in the device changes. The UR increments the value of paramRev by one whenever one or multiple setting changes occurs in one Modbus write request by any means (front panel, Modbus, or MMS) other than by SCL file download. Incrementing occurs whether or not the setting is represented in the information model. When a UR device or EnerVista UR Setup accepts an SCL file, paramRev is set to the value in that SCL file. When EnerVista UR Setup changes one or more settings, and prepares an SCL file, it increments paramRev to the next higher multiple of 10 000.

NOTE

Each logical device has a name: LDName. (Note the upper case LD.) LDName has both a product-related form and a function-related form as per IEC 61850 6:2009 8.5.3.

SCL files invariably use the product-related form of LDName. The product-related form is the concatenation of the IED name of the device and the individual logical device's inst name. The IED name is the value of the "IED NAME" setting on the Server Configuration panel, and the logical device inst names are each the value of the corresponding "Product LD inst name" setting here. The "Product LD inst name" of the first logical device is fixed at "Master."

Communications use the function-related form of LDName if a function-related name is defined, otherwise communications use the product-related name. The function-related name is the value of the corresponding "Functional ldName" setting if this setting is not empty, if empty the function-related name is not defined.

In SCL, the function-related name is specified by the LDevice element attribute ldName (note the lower case ld). Absence of this attribute indicates the function-related name is not defined. In SCL the product-related name is specified by the name attribute of the IED element and the inst attribute of the LDevice element.

In the right pane, logical nodes assigned permanently to the Master logical device and LLN0 in all logical devices are greyed-out as shown earlier. These are not movable. Any other logical node can be dragged to any of the logical devices in the middle pane, which causes that logical device to be re-assigned to that logical device. Right-clicking a logical node

device displays a menu that lists the logical devices that this logical node can be moved to. Clicking one of these re-assigns the logical node. Other common keyboard and/or mouse action can be used to select one or more logical nodes and move the selected nodes together.

Figure 5-26: Move logical node (Edition 2)

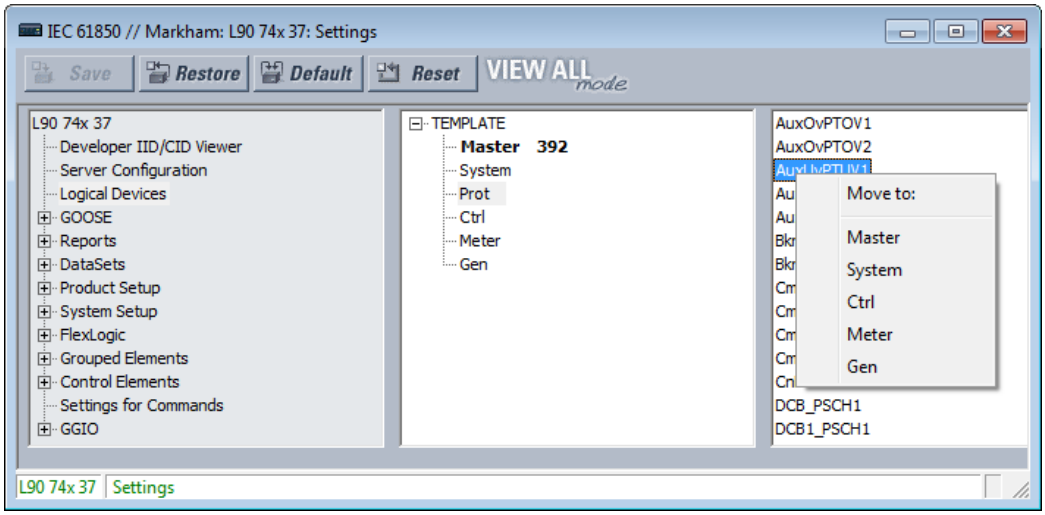

GOOSE

GOOSE, Routable GOOSE, and Process Bus GOOSE are supported, depending on hardware and software options.

The path is **Settings > Product Setup > Communications > IEC 61850 > GOOSE**.

Support for Routable GOOSE

Routable GOOSE (R-GOOSE) is supported in firmware release 7.4 and later for IEC 61850 Edition 2. Routable GOOSE allows UR and other devices to be located in separate networks. Encryption/decryption of messages is performed by a separate gateway device. Messages are routed using a separate router, using IP addresses.

Note the following behavior, using version 7.4 as an example:

- A v7.4 device can send an R-GOOSE message to another v7.4 device when both have R-GOOSE active as the protocol
- A v7.4 device can send a GOOSE message to another v7.4 device when both have GOOSE active as the protocol
- A v7.4 device cannot send an R-GOOSE message to non-R-GOOSE devices, such as a v7.3 or v5.9 UR device
- UR devices with firmware below v7.3 can send a GOOSE message to a v7.4 device that has GOOSE as the active protocol

NOTE

R-GOOSE is available through the IEC 61850 software option. If R-GOOSE security is required, the CyberSentry software option also is required.

GOOSE and Process Bus Modules

A Process Bus Module (order code 85, 86, or 87) is supported to subscribe to sampled value (SV) messages on the process bus. GOOSE functionality is supported on the module, which allows both reception and transmission of GOOSE messages in the process bus.

GOOSE publishing (TxGOOSE) on the Process Bus Module has the following limitations:

- A maximum of two GoCBs can be assigned to Process Bus Module ports and only the fast datasets (that are prefixed with TT6) can be assigned to the Process Bus Module GOOSE messages
- Only the data attributes with base types BOOLEAN, QUALITY, and TIME are supported to publish on Process Bus Module. If complete DO is included, all the data attributes in that DO have the bases type BOOLEAN, QUALITY, and TIME
- A maximum of 64 data attributes can be published with two TT6 datasets on the Process Bus Module

- Publishing Routable GOOSE messages on a Process Bus Module is not supported
- Dynamic priority is not supported

GOOSE reception (RxGOOSE) on the Process Bus Module has the following limitations:

- A GOOSE message can be subscribed using main CPU or Process Bus Module, but the same message cannot be subscribed from both
- For GOOSE subscription, a functional constraint data attribute (FCDA) in a given dataset cannot be subscribed more than once
- Subscribing to Routable GOOSE messages on a Process Bus Module is not supported

On a request to save in the IEC 61850 panel in the EnerVista software, an error message displays if any of the above rules fail. When a SCL file is imported and the validation against the above rules fail, the SCL file is rejected with an appropriate error message in the software and UR SCL log.

TxGOOSE

IEC 61850 GOOSE is an efficient method for simultaneous high-speed delivery of generic substation event information by a publishing device to more than one subscribing device. A TxGOOSE is a UR element implementing a single IEC 61850 GOOSE message publishing service. The subscribing function in URs is performed by RxGOOSE elements, as described in the next section. Each UR with an IEC 61850 order code option has 16 TxGOOSE elements. Each TxGOOSE can either use the original format specified in IEC 61850 8 1:2011 or the routable GOOSE (R-GOOSE; IEC 61850 Edition 2) format specified in IEC TR 61850-90-5:2012. Each TxGOOSE element can publish the values of up to 64 attributes of the IEC 61850 nodes in the UR.

Published TxGOOSE messages configured in the EnerVista UR Setup software can be subscribed by and the published operand values understood by other UR devices. Furthermore, they can be subscribed to and understood by any device of any manufacturer that implements the IEC 61850 Edition 1.0 or 2.0 GOOSE subscription mechanism. The messages are published with a multicast address so that the network sends the messages to all devices; any number of devices that want to subscribe can.

For wide-area protection, control, and monitoring schemes, R-GOOSE wraps the original format GOOSE in IP/UDP to multicast (or unicast) the data over a Wide Area Network (WAN). Sample applications are Wide area Remedial Action Scheme (RAS) and Under Voltage / Frequency Load Shedding Schemes (UVLS/UFLS). R GOOSE uses IGMPv3 (Internet Group Management Protocol version-3, RFC 3376) for multicasting.

The entity, device, or operand values that are published in GOOSE messages are known as members. The members are itemized in an ordered list known as a data set. Each TxGOOSE can use any one of the configured data sets. (See the DataSets section later for details.) The performance of a TxGOOSE is determined by its dataset. Booleans in fast GOOSE datasets are designed for the TT6 transfer time class (3 ms), while Booleans in the Normal datasets are designed for the TT3 class (100 ms). Due to the significant amount of CPU time required to compose a TT6 TxGOOSE message and the limited amount of time allowed by the TT6 class, at most four of these can be configured in a given UR. So only four fast GOOSE are allowed to be configured, and the UR software has a check to disallow the use of more than four fast datasets in GOOSE. If six fast datasets are configured outside of UR software and the file sent directly to the relay, the relay rejects the file. The design does allow six fast datasets to be used in report control blocks, which allows fast scanned data in reports.

Each enabled TxGOOSE transmits its message whenever a value change is detected in one or more of its members. If the changed value is a Boolean in a fast dataset, then the change detection occurs in the TT6 detection time of 3 ms or less. If the member is an analog value in a fast dataset, the change detection occurs in the TT3 time of 100 ms. In Normal GOOSE Datasets, change detection for all dataset members occurs in the TT3 time of 100 ms. To guard against the possibility that such a message is lost in the network before it reaches all subscribers, the message is retransmitted quickly several times. To allow subscribers to verify that their link to the publisher and the publisher itself are healthy, each message is also retransmitted periodically even while the values are unchanging. These latter messages are known as heartbeat messages, while the former are known as event messages. Heartbeat messages also enable a subscriber newly online to receive the published values in the absence of an event.

The details of TxGOOSE message construction are contained in the UR Family Communications Guide. Knowledge of these details is not required to configure GOOSE.

The UR does not implement the fixed-length encoded GOOSE messages option specified in IEC 61850-8-1:2011 clause A.3; the UR always uses the ASN.1 Basic Encoding Rules (specified in ISO/IEC 8825-1) as specified in IEC 61850 Edition 1.0 and optional in IEC 61850 Edition 2.0.

Navigate to **Settings > Product Setup > Communications > IEC 61850 > GOOSE > TxGOOSE > TxGOOSE1** to access the settings for the first TxGOOSE. The settings and functionality for the other entries are similar.

Figure 5-27: IEC 61850 TxGOOSE panel (Edition 2 and with Process Bus Module)

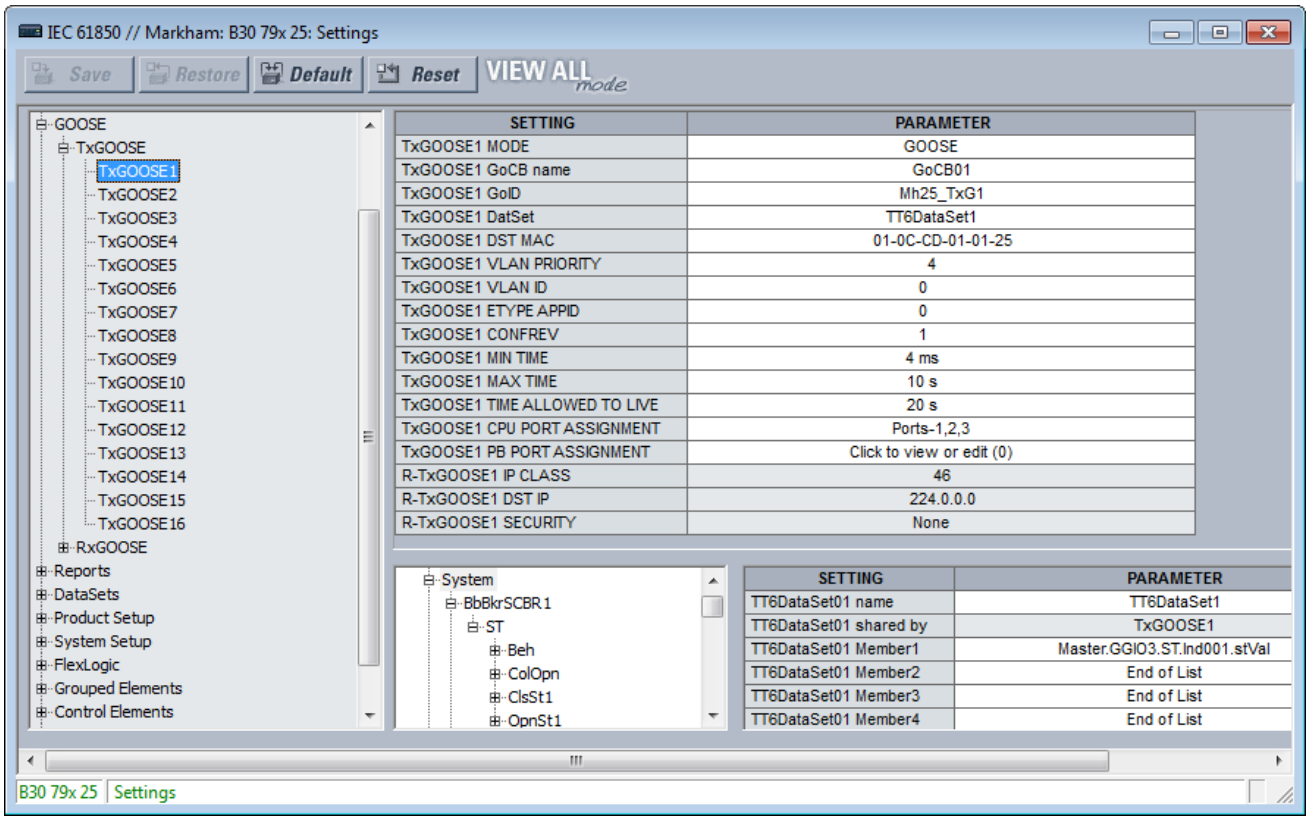

SETTING	PARAMETER
TxGOOSE1 MODE	GOOSE
TxGOOSE1 GoCB name	GoCB01
TxGOOSE1 GoID	Mh25_TxG1
TxGOOSE1 DatSet	TT6DataSet1
TxGOOSE1 DST MAC	01-0C-CD-01-01-25
TxGOOSE1 VLAN PRIORITY	4
TxGOOSE1 VLAN ID	0
TxGOOSE1 ETYPE APPID	0
TxGOOSE1 CONFREV	1
TxGOOSE1 MIN TIME	4 ms
TxGOOSE1 MAX TIME	10 s
TxGOOSE1 TIME ALLOWED TO LIVE	20 s
TxGOOSE1 CPU PORT ASSIGNMENT	Ports-1,2,3
TxGOOSE1 PB PORT ASSIGNMENT	Click to view or edit (0)
R-TxGOOSE1 IP CLASS	46
R-TxGOOSE1 DST IP	224.0.0.0
R-TxGOOSE1 SECURITY	None

SETTING	PARAMETER
TT6DataSet01 name	TT6DataSet1
TT6DataSet01 shared by	TxGOOSE1
TT6DataSet01 Member1	Master.GGIO3.ST.Ind001.stVal
TT6DataSet01 Member2	End of List
TT6DataSet01 Member3	End of List
TT6DataSet01 Member4	End of List

A data set needs to be set up and selected in the **TxGOOSEx DatSet** field for all content to display.

When saving changes, when a "dataset member is empty" message displays, you need to set the member in the bottom right of the window.

TxGOOSE1 MODE

Range for Edition 2: Disabled, GOOSE, R-GOOSE
Range for Edition 1: Disabled, GOOSE
Default: Disabled

When set to Disabled, TxGOOSE1 messages are not published. When set to GOOSE, TxGOOSE1 messages are published in IEC 61850 8 1:2011 GOOSE format. When set to R-GOOSE, TxGOOSE1 messages are published in Routable GOOSE format according to IEC 61850 90-5, and the **TxGOOSE1 DST MAC** address is set to 00 00 00 00 00 00 and cannot be changed.

TxGOOSE1 GoCB name

Range: 0 up to 32 VisibleString characters
Default: GoCB01

The entered value sets the GOOSE control block (GoCB) name value for TxGOOSE1.

An ObjectReference to the control block, which consists of the concatenation of the string "<LDName>/LLN0." and the control block name, is published in the gocbRef field of TxGOOSE1 messages and is used by subscribers to discriminate TxGOOSE1 messages from other GOOSE messages. <LDName> is a syntactic variable that is set to the value of setting Master functional ldName if one or more characters have been entered to that setting, otherwise the value of setting IED NAME suffixed with "Master".

TxGOOSE1 GoID

Range for Edition 2: 0 to 129 VisibleString characters
Range for Edition 1: 0 to 65 VisibleString characters
Default: TxGOOSE1

The entered value sets the goID value published in TxGOOSE1 messages, and can be used by subscribers to discriminate the TxGOOSE1 messages from other GOOSE messages. Special characters are not allowed, such as <, >, &, ', and ".

TxGOOSE1 DatSet

Range: None, TT6DataSet1,TT6 DataSet2, ... TT3DataSet01,TT3 DataSet02, ...
Default: None

This setting selects the published data set using the UR Setup software designator for the data set. If None is selected, no TxGOOSE1 messages are sent.

The IEC 61850 name of the data sets are configured in the Datasets panel, as described later.

Some datasets are designed for the TT6 transfer time class (3 ms), while others are designed for the TT3 class (100 ms). The performance of a TxGOOSE is determined by its dataset. Use TT6 datasets for trips and blocking applications, TT3 datasets for slow automatic interactions. The 61850 name of the datasets are configured in the Datasets panel.

An ObjectReference to the data set, which consists of the concatenation of the string "<LDName>/LLN0." and the data set name, is published in the datSet field of TxGOOSE1 messages and can be used by subscribers to discriminate TxGOOSE1 messages from other GOOSE messages. <LDName> is a syntactic variable that is set to the value of setting Master functional ldName if one or more characters have been entered to that setting, otherwise the value of setting IED NAME suffixed with "Master".

To configure a DataSet, select it at the top of the window from the drop-down list. In the lower part of the window, drag and drop configuration items to the right side. Dataset members configured here affect other Report or TxGOOSE control blocks that use the same DataSet.

The performance of the TxGOOSE is determined by the performance of the selected dataset. When the selection is TT3DataSet01, TT3DataSet02, ... it is possible that transient events can be missed.

TxGOOSE1 DST MAC

Range: any 12 digit hexadecimal number
Default: 01-0C-CD-01-00-00

When the **TxGOOSE1 MODE** setting is R-GOOSE, the **TxGOOSE1 DST MAC** address is set to 00 00 00 00 00 00 and cannot be changed. Otherwise, the value entered here sets the Ethernet destination Media Access Control (MAC) address in published TxGOOSE1 messages. As the standard requires that the address have the multicast bit set TRUE, that is to say the second digit is set to an odd number, messages transmitted have the multicast bit set TRUE no matter its value in this setting.

The destination MAC address can be used by the network to restrict message delivery to selected devices that need to receive them, reducing network load. This address also can be used by hardware in receiving devices to filter out messages that are of no interest to them, reducing processor burden. Different filtering algorithms are implemented by different devices. The standard recommends that the algorithm used by hardware of the receiving device be considered when assigning destination multicast addresses.

Subscribers can use this address to discriminate TxGOOSE1 messages from other GOOSE messages.

When using a Process Bus Module (order code 85, 86, or 87) and configuring multiple TxGOOSE to publish, ensure that the MAC addresses differ. When the MAC addresses are the same, a message displays to change them, for example "TxGOOSE1 & TxGOOSE2 assigned to PBM have the same DstMAC address. Unique DstMAC addresses are required between the TxGOOSE for 'PB Port Assignment' to work correctly."

TxGOOSE1 VLAN PRIORITY

Range: 0, 1, 2, 3, 4, 5, 6, 7, 5-4, 6-4, 6-5, 7-4, 7-5, 7-6

Default: 4

When the value entered is 0, 1, 2, 3, 4, 5, 6, or 7, the User Priority value in the IEEE 802.1Q VLAN tag included in published TxGOOSE1 messages is set to that value. When one of the two-digit values is entered, the dynamic priority feature is selected: the first event message has the User Priority value of the first digit, and User Priority is decremented in each following message until reaching the value of the second digit. For instance, if the selected value is 7-5, then the User Priority values in successive messages beginning with the message triggered by an event is 7, 6, 5, 5, 5, 5, 5, and so on. Do not make a dynamic priority selection when standard behavior is required.

Network devices can forward a message with a higher priority value before a message with a lower priority value, which speeds delivery of high-priority messages in heavily loaded networks. The standard recommends that higher-priority messages, such as GOOSE, have priority values in the range of 4 to 7.

TxGOOSE1 VLAN ID

Range: 0 to 4095 in steps of 1

Default: 0

The value entered sets the VID value in the IEEE 802.1Q VLAN tag included in published TxGOOSE1 messages. VID can be used by network devices to direct messages to only selected devices, reducing network burden. VID values of 0 and 1 are assigned by IEEE 802.1Q to other functions and are not to be used for GOOSE.

TxGOOSE1 ETYPE APPID

Range: 0 to 65535 in steps of 1

Default: 0

The value entered sets the APPID value in published GOOSE messages and can be used by subscribers to discriminate TxGOOSE1 messages from other GOOSE messages.

The standard reserves the value range 0 to 16383 for GOOSE Type 1 (Fast messages), and reserves the value range 32768 to 41151 for GOOSE Type 1A (Trip messages). Some subscribers can process messages in the Type 1A range faster than messages in the Type 1 range. The standard reserves the default value (0) to indicate lack of configuration. The standard strongly recommends unique, source-orientated APPIDs within a given system.

TxGOOSE1 CONFREV

Range: 0 to 4294967295 in steps of 1

Default: 1

The entered value sets the confRev value in published GOOSE messages and can be used by subscribers to discriminate TxGOOSE messages of the expected configuration revision from messages of a different revision. The standard requires that CONFREV be incremented each time the members or the order of the members published is changed. The standard states that the value of 0 is reserved.

TxGOOSE1 MIN TIME

Range: 0 to 100 ms in steps of 1 ms

Default: 4 ms

If the entered time is non-zero, when a member value change is detected, four event transmissions are sent, then heartbeat transmissions resume. The interval between the first and second event transmissions, and between the second and third, is the time set here. The interval between the third and the fourth event transmission is double the set time. If the entered time is zero, only a single event transmission occurs, then heartbeat transmissions resume.

TxGOOSE1 MAX TIME

Range: 1 to 59 s in steps of 1 s

Default: 30 s

This setting specifies the time interval between heartbeat messages, meaning messages that are sent periodically while no events are detected.

TxGOOSE1 TIME ALLOWED TO LIVE

Range: 1 to 60 s in steps of 1 s

Default: 20 s

The value entered sets the timeAllowedtoLive value in published TxGOOSE1 messages. The standard requires subscribers to assume a failure has occurred when another TxGOOSE1 message is not received within the published timeAllowedtoLive time.

Base this setting on the **TxGOOSE MAX TIME** and the tolerable number of contiguous message delivery misses. For example, if the heartbeat time is 10 s, and missing up to three successive messages is tolerable, make the setting 10 * 3 + 1 = 31 s. The extra second is to ensure that arrival of the third heartbeat transmission beats the timeAllowedtoLive timer.

In the imported CID file, if the **TxGOOSE1 TIME ALLOWED TO LIVE** is greater than 60 seconds, clamp the setting value to 60 seconds and an information log is provided in SCL log.

TxGOOSE1 CPU PORT ASSIGNMENT

Range: Disabled, Port-1; Port-2; Port-3; Ports-1,2; Ports-2,3; Ports-1,3; Ports-1,2,3

Default: Ports-1,2,3

This setting applies to IEC 61850 Edition 2.

This setting specifies the Ethernet ports for transmission of TxGOOSE1. When set to disabled, TxGOOSE1 messages are not transmitted on any port no matter the state of GoEna. When set to Port-1, TxGOOSE1 is published over Ethernet Port-1 only; while selecting Ports-1, 3 option, the same TxGOOSE1 is published to both Ports 1 and 3; and similarly if set to Ports-1, 2, 3, all ports publish TxGOOSE1.

NOTE

When setting **PRT2 REDUNDANCY** to Failover or to PRP, the **TxGOOSE 1 CPU PORT ASSIGNMENT** needs to be set to ports 2 and 3 (Ports-2,3).

Also, Port 3 configuration in the CID file is ignored. The Port 3 ConnectedAP elements has no meaning, as ports 2 and 3 use the port 2 MAC address, IP address, and mask.

5

TxGOOSE1 PB PORT ASSIGNMENT

Range: Individual ports may or may not be checked (PB Port-1...PB Port-8)

Default: None of the ports are selected

This setting displays when the order code includes a non-HardFiber Process Bus Module.

When using a UR Process Bus Module, this setting specifies the Ethernet ports on the Process Bus Module for transmission of TxGOOSE1. When none of the ports are selected, a TxGOOSE1 message is not transmitted on any port no matter the state of GoEna. When set to PB Port-1, TxGOOSE1 is published over Process Bus Module Port-1 only. Similarly, if all ports are selected (PB Port-1 to PB Port-8) all Process Bus Module ports publish TxGOOSE1.

When the TxGOOSE1 Mode is set to R-GOOSE, the setting is read-only.

A maximum of 64 data attributes (in one or more datasets) are allowed to transmit on all TxGOOSE messages that are configured to transmit on the Process Bus Module.

R-TxGOOSE1 IP CLASS

Range: 0 to 256 in steps of 1

Default: 46

This setting applies to IEC 61850 Edition 2.

When the **TxGOOSE1 MODE** setting is other than R-GOOSE, the value of this setting is not used. Otherwise this setting selects the IPv4 Differentiated Services Code Point-DSCP (formerly called TypeOfService-TOS) value. This value provides priority routing, when supported in the routers. The default value is for Expedited Forwarding (101110B, 46 or 2EH).

R-TxGOOSE1 DST IP

Range: 0.0.0.0 to 255.255.255 in steps of 1

Default: 224.0.0.0

This setting applies to IEC 61850 Edition 2.

When the **TxGOOSE1 MODE** setting is other than R-GOOSE, the value of this setting is not used. Otherwise this setting specifies destination IP address for the R-TXGOOSE1 that is entered in Standard IPV4 address format. The destination IP address needs to be a valid multicast or unicast IP address. The value specified in this setting is mapped to IPv4 header 32 bit field for Destination IP Address while publishing R-GOOSE1.

The default IP address 224.0.0.0 is reserved, and hence not a valid multicast IP address.

The source IP address is that of the UR port from which the R-GOOSE messages are transmitted.

R-TxGOOSE1 SECURITY

Range: None, Signature, SignatureAndEncryption
Default: None

This setting applies to IEC 61850 Edition 2.

This setting specifies level of security (authentication/encryption) used for TxGOOSE1. None specifies no security mechanisms are to be used. Signature specifies only signature (no encryption) is to be used. SignatureAndEncryption specifies that both signature and encryption are to be used.

RxGOOSE

Navigate to **Settings > Product Setup > Communications > IEC 61850 > GOOSE > RxGOOSE > RxGOOSE Messages**.

GOOSE is an efficient method for simultaneous high-speed delivery of generic substation event information by a publishing device to more than one subscribing device. An RxGOOSE is a UR element implementing a single IEC 61850 GOOSE message subscribing service. The publishing function in URs is performed by TxGOOSE elements, as described in the previous section.

Each UR with an IEC 61850 order code option has 64 RxGOOSE elements. Each RxGOOSE element can subscribe to GOOSE messages from a specified publisher. Each RxGOOSE can either use the original format specified in IEC 61850 8 1:2011 or the routable GOOSE (R-GOOSE; IEC 61850 Edition 2) format specified in IEC TR 61850-90-5:2012. Subscribed message members can be DataObjects, SubDataObjects, DataAttributes, or SubAttributes. In E2-2.0 mode, members are restricted to basic types BOOLEAN, FLOAT32, INT32, Dbpos, TimeStamp, or Quality. Each subscribed message can contain up to 64 values. A member can be a structure containing several values; note that it is the number of values rather than the number of members that are limited to 64.

GOOSE messages from any device of any manufacturer that implements the IEC 61850 Edition 1.0 or 2.0 GOOSE publish service or the 61850-90-5 R-GOOSE service (IEC 61850 Edition 2) can be subscribed to. The UR accepts both the variable-length encoded GOOSE messages specified in IEC 61850 8 1:2004 and the fixed-length encoded GOOSE messages as specified in IEC 61850 8 1:2011 clause A.3.

Each enabled RxGOOSE monitors for interruption of the GOOSE messages it subscribes to based on the value in the timeAllowedtoLive field of the last message received. If a new message is not received within that time interval, the RxGOOSE assumes that connectivity is lost. FlexLogic operands (for example RxGOOSE1 On, RxGOOSE1 Off) reflect the status of each RxGOOSE connectivity. An RxGOOSE connection is also considered lost after the UR finishes restart until a message is received. While any RxGOOSE connectivity is lost, a common RxGOOSE Fail self-test is activated.

Messages that contain the value true in the ndsCom field are never accepted. Messages that contain the value true in the simulation field (test field in Edition 1.0 messages) are accepted only when the UR **Test Mode Function** setting is set to Test or Test-Blocked.

RxGOOSE messages can be received through a UR CPU module Ethernet port or a UR Process Bus Module Ethernet port. A maximum of eight RxGOOSE messages can be received from the Process Bus Module.

Navigate to **Settings > Product Setup > Communications > IEC 61850 > GOOSE > RxGOOSE > RxGOOSE Messages > RxGOOSE1** to access the settings that specify the messages to be accepted by the first RxGOOSE element. The settings and functionality for the other RxGOOSE are similar. The following settings are available. They allow RxGOOSE1 to recognize the GOOSE messages to accept. Most of these settings are configured automatically by the EnerVista UR Setup software when an association to an RxGOOSE Boolean Input, RxGOOSE DPS Input, and/or RxGOOSE Analog Input is made as described in the following sections. For IEC 61850 Edition 2, settings **R-RxGOOSE1 RECEPTION MODE**, **R-RxGOOSE1 SECURITY**, and **R-RxGOOSE SRC IP** need to be completed manually as the information is not contained in publisher SCL. Read-only settings are grey.

Figure 5-28: IEC 61850 RxGOOSE Messages panel (Edition 2)

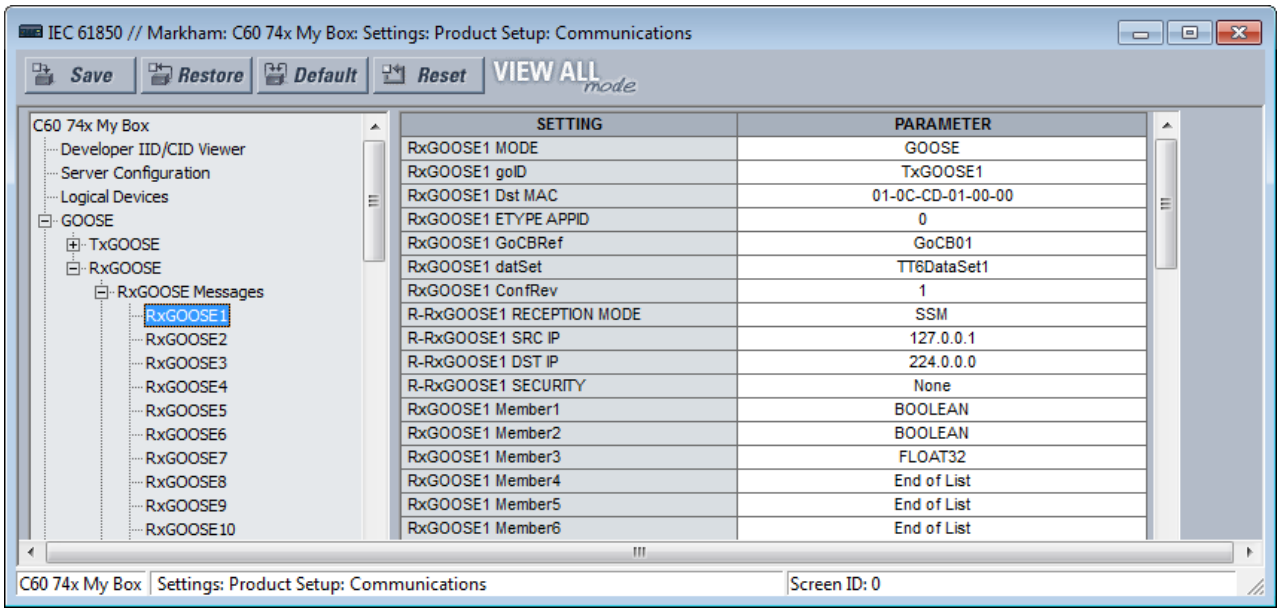

SETTING	PARAMETER
RxGOOSE1 MODE	GOOSE
RxGOOSE1 goID	TxGOOSE1
RxGOOSE1 Dst MAC	01-0C-CD-01-00-00
RxGOOSE1 ETYPE APPID	0
RxGOOSE1 GoCBRef	GoCB01
RxGOOSE1 datSet	TT6DataSet1
RxGOOSE1 ConfRev	1
R-RxGOOSE1 RECEPTION MODE	SSM
R-RxGOOSE1 SRC IP	127.0.0.1
R-RxGOOSE1 DST IP	224.0.0.0
R-RxGOOSE1 SECURITY	None
RxGOOSE1 Member1	BOOLEAN
RxGOOSE1 Member2	BOOLEAN
RxGOOSE1 Member3	FLOAT32
RxGOOSE1 Member4	End of List
RxGOOSE1 Member5	End of List
RxGOOSE1 Member6	End of List

RxGOOSE1 MODE

For Ed2: Main CPU GOOSE, Main CPU R-GOOSE, Process Bus Module GOOSE

For Ed1: GOOSE

Default: Main CPU GOOSE

When set to "Main CPU GOOSE," the relay subscribes to RxGOOSE1 messages if received on any of the three main CPU ports and if they comply with IEC 61850-8-1:2011 GOOSE format.

When set to "Main CPU R-GOOSE," the relay subscribes to RxGOOSE1 messages if received on any of the three main CPU ports and if they comply with the R-GOOSE format according to IEC 61850-90-5.

When set to "Process Bus Module GOOSE," the relay subscribes to RxGOOSE1 messages if received on any of the eight UR Process Bus Module ports and if they comply with IEC 61850-8-1:2011 GOOSE format.

RxGOOSE1 goID

Range: 0 to 129 VisibleString characters

Default: empty string

If the entered value has one or more characters, the goID field of incoming GOOSE messages must exactly match this value for the message to be accepted as a valid RxGOOSE1 message. If the entered value is the empty string, RxGOOSE1 does not check the value received in the goID field. Special characters are not allowed, such as <, >, &, ', and ".

If the publisher is a UR 7.3x series device, this setting needs match the value of the publisher's **TxGOOSE GoID** setting.

RxGOOSE1 Dst MAC

Range: any 12 digit hexadecimal number

Default: 01-0C-CD-01-00-00

When the **RxGOOSE1 MODE** setting is R-GOOSE, the value of this setting is not used, the destination Media Access Control (MAC) address for RxGOOSE1 messages is calculated based on the **RxGOOSE DST IP** address. Otherwise, set this setting to the MAC address of the publisher. Only received GOOSE messages having a MAC address equal to this value are accepted as valid RxGOOSE1 messages. An entered address of zero disables RxGOOSE1.

If the publisher is a UR series 7.3x device, the setting needs to match the value of the publisher's **TxGOOSE DST MAC** setting.

RxGOOSE1 ETYPE APPID

Range: 0 to 65535 in steps of 1

Default: 0

If the value entered is non-zero, the APPID field of incoming GOOSE messages must exactly match this value for the message to be accepted as a valid RxGOOSE1 message. If the value entered is zero, RxGOOSE1 does not check the value received in the APPID field.

If the publisher is a UR series 7.3x device, the setting needs to match the value of the publisher's **TxGOOSE ETYPE APPID** setting.

RxGOOSE1 GoCBRef

Range: 0 to 129 alphanumeric, underscore, slash and period characters, beginning with an alpha character

The gocbRef field of incoming GOOSE messages must match this value for the message to be accepted as a valid RxGOOSE1 message. If the entered value is the empty string, RxGOOSE1 is disabled. If not the empty string, the entry needs to be an ACSI ObjectReference to the publishing control block in the format:

<LDName>/LLN0.<GoCBName>

where <LDName> is the function-related name if the logical device containing the publishing control block has "ldName" configured, otherwise the product-related name of that logical device, and <GoCBName> is the name of the publishing control block.

The C70 translates the ACSI format required for this setting to the MMS format used in GOOSE messages:

<LDName>/LLN0GO<GoCBName>

If the publisher is a UR 7.3x or 7.40 series device, <LDName> is the value of the publisher's Master functional ldName setting if that setting is not empty, otherwise it is the value of the publisher's IED NAME suffixed with "Master". If the publisher is a UR 7.3x series device, <GoCBName> is "GoCB" suffixed with the two digit TxGOOSE instance number, for example "GoCB01". If the publisher is a UR 7.40 series device, <GoCBName> is as specified earlier in the TxGOOSE section of this chapter.

RxGOOSE1 datSet

Range: 0 to 32 alphanumeric and underscore characters, beginning with an alpha character

Default: empty string

If the entered value has one or more characters, the datSet field of incoming GOOSE messages must exactly match this value prefixed by <LDName>/LLN0$ for the message to be accepted as a valid RxGOOSE1 message. <LDName> is as specified in the RxGOOSE GoCBRef setting above. If the entered value is the empty string, RxGOOSE1 does not check the value received in the datSet field.

If the publisher is a UR 7.3x series device, set this setting to the value of the publisher's DataSetxx name setting, where xx is the instance number of the data set selected by the publisher's **TxGOOSE datSet** setting. If the publisher is a UR 7.40 series device, datSet is as specified in the DataSets section of this chapter.

RxGOOSE1 ConfRev

Range: 0 to 4294967295 in steps of 1

Default: 1

If the value entered is non-zero, the confRev field of incoming GOOSE messages must exactly match this value for the message to be accepted as a valid RxGOOSE1 message. If the entered value is zero, RxGOOSE1 does not check the value received in the confRev field.

If the publisher is a UR 7.3x series device, set this setting to match the value of the publisher's **TxGOOSE ConfRev** setting.

R-RxGOOSE1 RECEPTION MODE

Range: SSM, ASM, Unicast

Default: SSM

This setting applies to IEC 61850 Edition 2.

When the **RxGOOSE1 MODE** setting is other than R-GOOSE the value of this setting is not used. Otherwise it selects the R-GOOSE reception mode.

R-RxGOOSE RECEPTION MODE specifies the **R-RxGOOSE DST IP** range. When set to SSM, **R-RxGOOSE DST IP** must be in the range of 232.0.0.1 to 232.255.255.255. When set to ASM, **R-RxGOOSE DST IP** must be in the range of 224.0.0.1 to 239.255.255.255, excluding the SSM range. Note that the SSM range is inside the ASM range and therefore the ASM use excludes the SSM range. The default destination IP address 224.0.0.0 is reserved, and hence not a valid multicast IP address.

The reception modes are related to Layer-3 R-GOOSE reception from routers/WAN. The subscription to multicasting of R-GOOSE is supported using IGMP Protocol Independent Multicast (PIM). It is made available in either Source Specific Multicast (SSM) mode or Any Source Multicast (ASM) mode. Unicast (over UDP) mode can also be used. In case of multicasting (IGMPv3 based SSM or ASM), the R-GOOSE subscriber device requests the Last Hop Router (LHR) to subscribe to a specific multicasting group.

If the publisher is using a unicast destination IP address for this R-GOOSE, then set **R-RxGOOSE1 RECEPTION MODE** to Unicast. Otherwise set **R-RxGOOSE1 RECEPTION MODE** to the SSM or ASM mode used by the local routers/firewalls.

R-RxGOOSE1 SRC IP

Range: 0.0.0.0 to 255.255.255 in steps of 1
Default: 127.0.0.1

This setting applies to IEC 61850 Edition 2.

When the **RxGOOSE1 MODE** setting is other than R-GOOSE, the value of this setting is not used. When the **RxGOOSE1 MODE** setting is R-GOOSE and the **R-RxGOOSE RECEPTION MODE** setting is ASM, the value of this setting is not used. Otherwise the Source IP Address field of incoming R-GOOSE messages must exactly match this value for the message to be accepted as a valid RxGOOSE1 message. Set this setting to the value of the source IP address used by the publisher. For UR publishers, this value is in setting PRT# IP ADDRESS.

The UR does not validate the address entered. The default IP address 127.0.0.1 is a reserved, not a valid IP address. Enter a valid IP source address.

R-RxGOOSE1 DST IP

Range: 0.0.0.0 to 255.255.255 in steps of 1
Default: 224.0.0.0

This setting applies to IEC 61850 Edition 2.

When the **RxGOOSE1 MODE** setting is other than R-GOOSE, the value of this setting is not used. Otherwise the Destination IP Address field of incoming R GOOSE messages must exactly match this value for the message to be accepted as a valid RxGOOSE1 message. Set this setting to the same value as the R-GOOSE publisher's Destination IP Address. For UR publishers, this value is in setting R-TxGOOSE# DST IP.

The destination IP address needs to be a valid multicast or unicast IP address. The UR does not validate the address entered. The default IP address 224.0.0.0 is reserved, and hence not a valid multicast IP address.

R-RxGOOSE1 SECURITY

Range: None, Signature, SignatureAndEncryption
Default: None

This setting applies to IEC 61850 Edition 2.

This setting specifies the level of security (authentication/encryption) used for RxGOOSE1. None indicates no security mechanisms are in use. Signature indicates only signature (no encryption) is in use. SignatureAndEncryption indicates that both signature and encryption are in use. Normally this setting is set to match the GOOSE publisher's security method.

RxGOOSE1 Member 1

Range: End of List, BOOLEAN, FLOAT32, INT32, Dbpos (DPS), Quality, TimeStamp, Struct
Default: End of List

This setting specifies the type that the first member of incoming GOOSE messages must be for the message to be accepted as a valid RxGOOSE1 message. There are similar settings for each of the up to 64 members that the UR is able to subscribe to in a given GOOSE message. The member before the first member setting set to "End of List" must be the last member of the message for the message to be accepted as a valid RxGOOSE1 message.

If the publisher is a UR 7.3x or 7.40 series device, set these settings to match the basic type of the members of the publisher's data set selected by the publisher's **TxGOOSE datSet** setting.

If the publisher dataset includes members with structured data, that is, data attributes, sub-data objects, and/or data attributes with sub-data attributes, configuration must use one of the new 7.40 UR Setup RxGOOSE Inputs pages. In this case the Member setting displays as the product-related name used by the publishing IED of the data object or data attribute, in standard SCSM format (e.g. Publisher1LD1/LLN0STOff$stVal).

Note that a dataset can hold at most 64 basic data attribute values, and that a single structured data object or attribute can contain multiple basic data attribute values. UR Setup software does not allow more that 64 basic data attribute values to be entered, in which case the last several members settings cannot be changed from End of List.

Note that the publisher's name alone does not contain all the information required for subscription, additional publisher information model information is stored elsewhere. For this reason, manual entry of the name is not supported.

RxGOOSE inputs

The values received by RxGOOSE elements need to be converted to FlexLogic or FlexAnalog operands so that they can be used by other UR elements. This conversion is done by RxGOOSE Boolean, RxGOOSE DPS, and RxGOOSE Analog elements. Each RxGOOSE Boolean can convert the value of a specified Boolean value received by a specified RxGOOSE to a FlexLogic operand. Each RxGOOSE DPS can convert the value of a specified Dbpos (Double bit position) value to four FlexLogic operands, one for each of the four possible Dbpos states. Each RxGOOSE Analog can convert the value of a specified FLOAT32 member to a FlexAnalog operand. Each of these operands reverts to its default state when the RxGOOSE connectivity is lost. Other types of values can be present in subscribed GOOSE messages but cannot be converted to operands.

When an RxGOOSE Input is mapped to a value in the GOOSE message, the associated q value is validated, if the q value is included in that GOOSE message as part of the data object or if it is part of the same dataset. For such automatic mapping, the index of associated quality value can be seen in the RxGOOSE Member field as read-only.

RxGOOSE Boolean, RxGOOSE DPS, and RxGOOSE Analog elements are mapped to various data objects in <iedName>Master/GGIO3. This allows reading of their values via MMS and allows references to them in SCL files. GGIO3 has no settings, nor is it visible in the EnerVista UR Setup software. See the UR Family Communications Guide for more information on GGIO3.

For each configured RxGOOSE Input, the UR monitors the associated quality attribute if available. An RxGOOSE Input reverts to its configured default value as follows:

- If the validity bits of the quality attribute (q.validity) are invalid
- If the validity bits of the quality attribute are questionable
- If the test bit of the quality attribute is set and **IED Mode** is other than Test or Test-Blocked

When the **IED Mode** setting is Test or Test-Blocked, the q.test bit is not validated. That is, when the relay is in test or test-blocked mode, the q.test = False is treated same as q.test = True.

When an RxGOOSE Boolean/DPS/Analog Input is mapped to a remote GOOSE message input using the publisher SCL file, the UR automatically maps and monitors the associated quality member as follows:

- If the publisher dataset includes members with structured data
- If the publisher dataset includes data attributes and associated quality attribute is available in the same dataset (in any sequence)

If the publisher dataset member that is mapped to RxGOOSE input is structured data, the quality attribute is embedded in the same structure.

If the publisher dataset member that is mapped to RxGOOSE input is a data attribute, the UR scans the rest of the attributes in that publisher dataset for a matching quality attribute.

Set up subscriptions

Subscriptions are configured in the RxGOOSE Boolean Inputs, DPS Inputs, and Analog Inputs panels.

There are **Add IED** and **Remove IED** buttons. The **Add IED** button allows SCL files to be used, including ICD, CID, and SCD (supported in version 7.40 and later). With SCL file import, for Edition 1 the IP address in the ConnectedAP element must match one IP address of the device, while for Edition 2 one of the three IP addresses in the ConnectedAP element must match. When the file format is SCD, the system lists all IEDs inside the SCD file and lets the user select the ones to add. The figure shows a selection being made by importing a CID file using the **Add IED** function.

The "**Do NOT default Remote Input ID...**" check box applies when configuring GOOSE subscription. It determines if the **ID** field is retained or defaulted. When enabled, the **ID** is retained. When disabled, the **ID** is defaulted. For example, you change the **ID** field from "RxG Bool1" to RxG Bool1west," and the change is retained when the check box is enabled. The check box applies on drag-and-drop, manual configuration, manual deletion, deletion using the **Remove IED** button, and when clicking the **Default** button in the RxGOOSE message panel. The **Default** and **Reset** buttons in the RxGOOSE Boolean Inputs, DPS Inputs, and Analog Inputs panels default all settings in the panel, including the **ID**, regardless of the check box. The check box is available for to UR version 7.4x and later devices.

To subscribe:

1. Click the **Add IED** button and import a file.
2. Expand the entries by clicking the + box.
3. Drag-and-drop an entry into a **Subscribed to** field. The software checks for duplicates.

Most of the settings are configured by drag-and-drop. Enter manually the ID, DEFAULT STATE, and EVENTS settings when the factory default values are not acceptable.

In the example shown, all of the entries at the bottom of the screen have been added to the subscription column.

Figure 5-29: RxGOOSE subscription

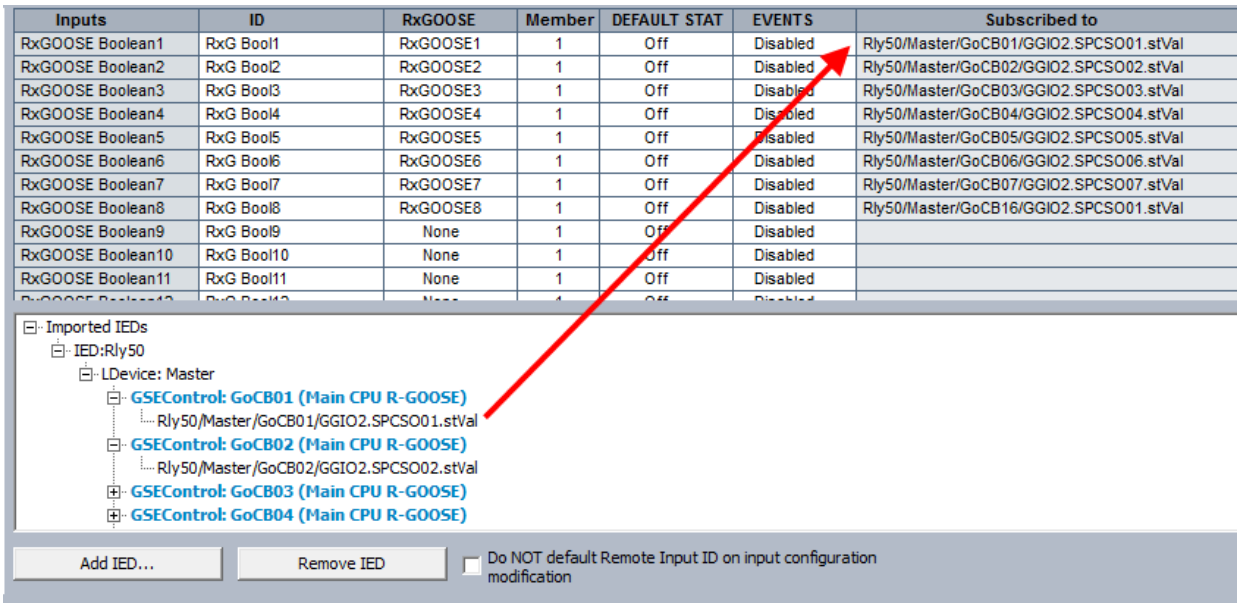

RxGOOSE Boolean inputs

Navigate to **Settings > Product Setup > Communications > IEC 61850 > GOOSE > RxGOOSE > RxGOOSE Boolean Inputs**.

The number of RxGOOSE Boolean (remote inputs) is 256.

Figure 5-30: RxGOOSE Boolean Input panel (Edition 2)

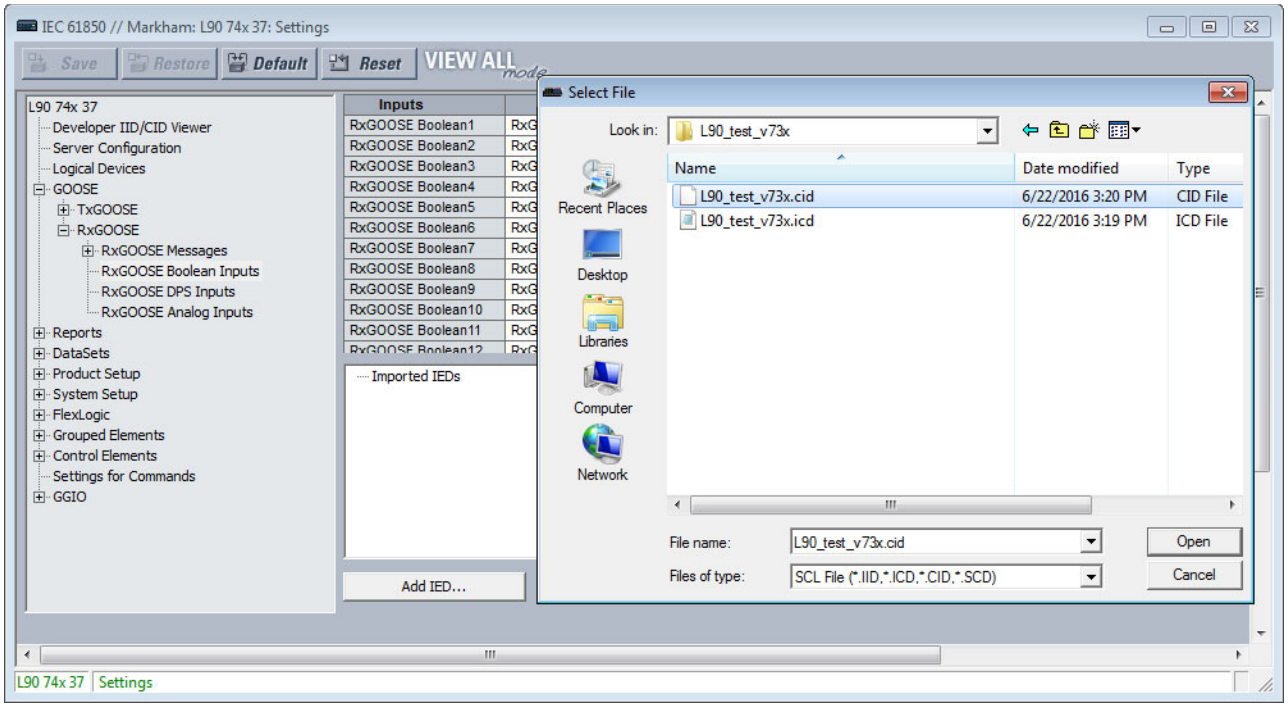

5

As outlined earlier, most of the settings are configured by drag-and-drop. Enter manually the ID, DEFAULT STATE, and EVENTS settings when the factory default values are not acceptable.

RxGOOSE Boolean1 ID

Range: 0 to 20 characters

Default: RxG Bool1

This setting allows the user to assign descriptive text to the name of the RxGOOSE Boolean1 FlexLogic operand. The full operand name is the value of this setting appended with " On". The basic and enhanced front panels display the first 17 characters of this setting plus " On" to fit the 20 character display.

The setting value is auto-populated and read-only for quality mapped to a configured remote input.

RxGOOSE Boolean1 RxGOOSE

Range: None, RxGOOSE1, RxGOOSE2, and so on

Default: None

This setting selects the RxGOOSE containing the value that drives the RxGOOSE Boolean1 FlexLogic operand. If set to None, the RxGOOSE Boolean1 FlexLogic operand assumes its default state.

The setting value is auto-populated and read-only for quality mapped to a configured remote input.

RxGOOSE Boolean1 Member

Range: 1 to 64 in steps of 1

Default: 1

This setting selects the GOOSE message member that drives the RxGOOSE Boolean1 FlexLogic operand. A setting of 1 selects the first member, 2 selects the second member, and so on. Entering a number greater than the number of members in the message and entering the number of a member which does not contain a BOOLEAN results in the RxGOOSE Boolean1 FlexLogic operand assuming its default state. The Subscribed to column identifies the particular Boolean subscribed to even if the member is a structure containing more than one Boolean.

The setting value is auto-populated and read-only for quality mapped to a configured remote input.

RxGOOSE Boolean1 DEFAULT STATE

Range: On, Off, Latest/On, Latest/Off

Default: Off

This setting selects the logic state for the RxGOOSE Boolean1 FlexLogic operand if the UR has just completed startup and the selected RxGOOSE has not yet received a message, or the selected RxGOOSE has lost its connectivity with the publisher. The following choices are available:

- "On" value defaults the input to logic 1
- "Off" value defaults the input to logic 0
- "Latest/On" freezes the input in case of lost connectivity. If the latest state is unknown, such as after UR power-up but before the first communication, the input defaults to logic 1. When communication resumes, the input becomes fully operational.
- "Latest/Off" freezes the input in case of lost connectivity. If the latest state is unknown, such as after UR power-up but before the first communication, the input defaults to logic 0. When communication resumes, the input becomes fully operational.

RxGOOSE Boolean1 EVENTS

Range: Disabled, Enabled

Default: Disabled

This setting selects whether Off to On transitions of the RxGOOSE Boolean1 FlexLogic operand are recorded by the event recorder. If set to Enabled, Off to On transitions are recorded. On to Off transitions are never recorded, even if events are enabled.

5

RxGOOSE DPS inputs

Navigate to **Settings > Product Setup > Communications > IEC 618560 > GOOSE > RxGOOSE > RxGOOSE DPS Inputs**.

Figure 5-31: RxGOOSE DPS Inputs panel (Edition 2)

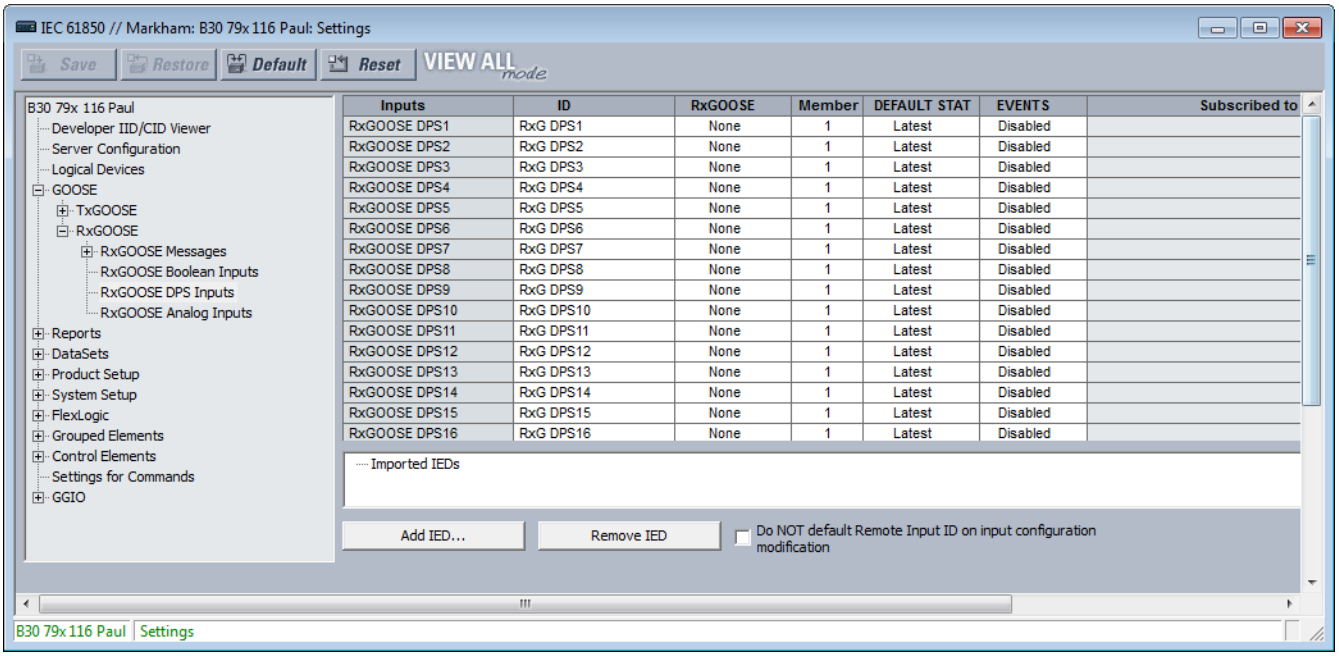

Inputs	ID	RxGOOSE	Member	DEFAULT STAT	EVENTS	Subscribed to
RxGOOSE DPS1	RxG DPS1	None	1	Latest	Disabled	
RxGOOSE DPS2	RxG DPS2	None	1	Latest	Disabled	
RxGOOSE DPS3	RxG DPS3	None	1	Latest	Disabled	
RxGOOSE DPS4	RxG DPS4	None	1	Latest	Disabled	
RxGOOSE DPS5	RxG DPS5	None	1	Latest	Disabled	
RxGOOSE DPS6	RxG DPS6	None	1	Latest	Disabled	
RxGOOSE DPS7	RxG DPS7	None	1	Latest	Disabled	
RxGOOSE DPS8	RxG DPS8	None	1	Latest	Disabled	
RxGOOSE DPS9	RxG DPS9	None	1	Latest	Disabled	
RxGOOSE DPS10	RxG DPS10	None	1	Latest	Disabled	
RxGOOSE DPS11	RxG DPS11	None	1	Latest	Disabled	
RxGOOSE DPS12	RxG DPS12	None	1	Latest	Disabled	
RxGOOSE DPS13	RxG DPS13	None	1	Latest	Disabled	
RxGOOSE DPS14	RxG DPS14	None	1	Latest	Disabled	
RxGOOSE DPS15	RxG DPS15	None	1	Latest	Disabled	
RxGOOSE DPS16	RxG DPS16	None	1	Latest	Disabled	

As outlined earlier, most of the settings are configured by drag-and-drop. Enter manually the ID, DEFAULT STATE, and EVENTS settings when the factory default values are not acceptable.

RxGOOSE DPS1 ID

Range: 0 to 20 characters

Default: RxG DPS1

This setting allows the user to assign descriptive text to the names of the four RxGOOSE DPS1 FlexLogic operands. The full operand name is the value of this setting appended with "Interm," "On," "Off," or "Bad." The basic and enhanced front panels display the first 13 characters of this setting plus the state suffix to fit the 20 character display.

RxGOOSE DPS1 RxGOOSE

Range: None, RxGOOSE1, RxGOOSE2, and so on

Default: None

This setting selects the GOOSE message containing the value that drives the RxGOOSE DPS1 FlexLogic operand. If set to None, the RxGOOSE DPS1 FlexLogic operand assumes its default state.

RxGOOSE DPS1 Member

Range: 1 to 64 in steps of 1

Default: 1

This setting selects the GOOSE message member that drives the RxGOOSE DPS1 FlexLogic operand. A setting of 1 selects the first member, 2 selects the second member, and so on. Entering a number greater than the number of members in the message and entering the number of a member that is not a Dbpos results in the RxGOOSE DPS1 FlexLogic operand assuming its default state. In the case that the member is a structure containing more than one Dbpos, the Subscribed to column identifies the particular Dbpos subscribed to.

RxGOOSE DPS1 DEFAULT STATE

Range: Intermediate-state, Off, On, Bad-state, Latest

Default: Latest

This setting selects the logic state for the data attribute @Master/GGIO3.IndPos01.stVal and the DPS FlexLogic operands when the UR has just completed start-up and the selected RxGOOSE has not yet received a message, and when the RxGOOSE has lost its connection with the publisher. When this setting is selected to Latest, the value of @Master/GGIO3.IndPosψψ.stVal is Intermediate-state when the UR has just completed start-up and the selected RxGOOSE has not yet received a message, and the latest received value when the RxGOOSE loses its connectivity with the publisher.

RxGOOSE DPS1 EVENTS

Range: Disabled, Enabled

Default: Disabled

This setting selects whether Off to On transitions of the RxGOOSE DPS1 FlexLogic operands are recorded by the event recorder. If set to Enabled, Off to On transitions are recorded. On to Off transitions are never recorded, even if events are enabled.

RxGOOSE analog inputs

Navigate to **Settings > Product Setup > Communications > IEC 61850 > GOOSE > RxGOOSE > RxGOOSE Analog Inputs**.

There are 32 RxGOOSE analog inputs.

Figure 5-32: RxGOOSE Analog Inputs panel (Edition 2)

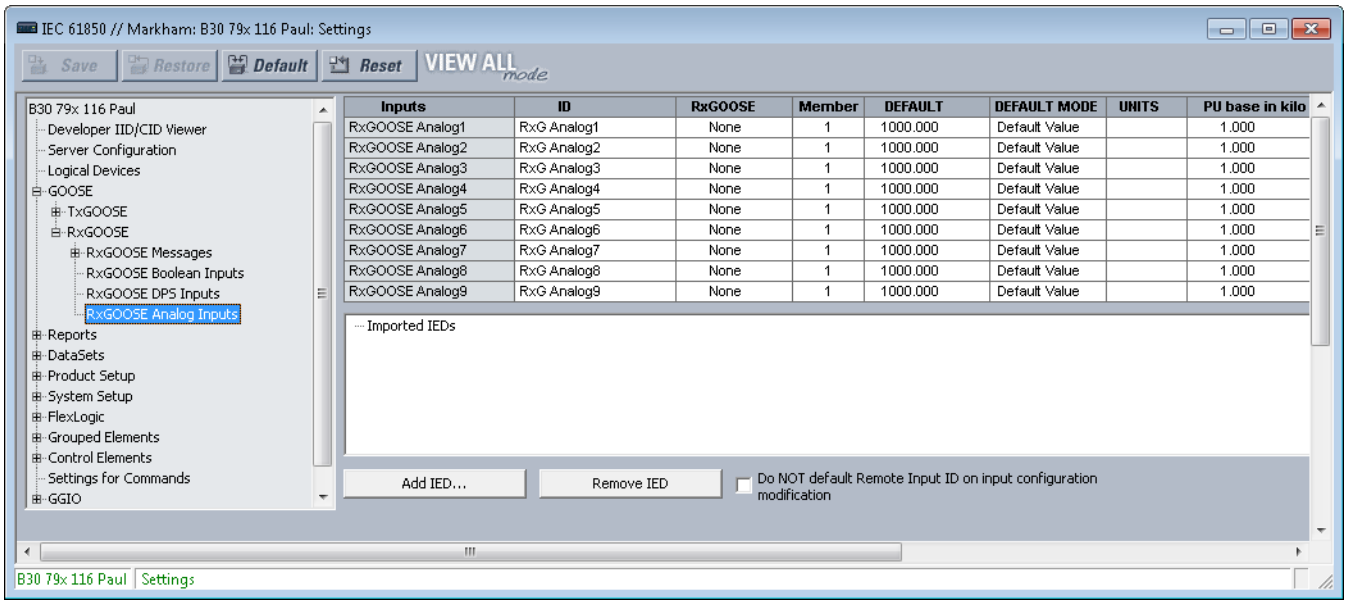

As outlined earlier, most of the settings are configured by drag-and-drop. Enter manually the ID, DEFAULT STATE, and EVENTS settings when the factory default values are not acceptable.

RxGOOSE Analog1 ID

Range: 0 to 20 characters

Default: RxG Analog1

This setting allows the user to assign descriptive text to RxGOOSE Analog1. Unlike RxGOOSE Booleans and RxGOOSE DPS, the RxGOOSE Analog operands have fixed names, for example RxGOOSE Analog1.

RxGOOSE Analog1 RxGOOSE

Range: None, RxGOOSE1, RxGOOSE2, and so on

Default: None

This setting selects the GOOSE message that drives the RxGOOSE Analog1 FlexAnalog operand. If set to None, the RxGOOSE Analog1 FlexAnalog operand assumes its default state.

RxGOOSE Analog1 Member

Range: 1 to 64 in steps of 1

Default: 1

This setting selects the GOOSE message member that drives the RxGOOSE Analog1 FlexAnalog operand. A setting of 1 selects the first member, 2 selects the second member, and so on. Entering a number greater than the number of members in the message and entering the number of a member that does not contain a FLOAT32 results in the RxGOOSE Analog1 FlexAnalog operand assuming its default state. The Subscribed to column identifies the particular FLOAT32 subscribed to even if the member is a structure containing more than one FLOAT32.

RxGOOSE Analog1 DEFAULT

Range: -1000000.000 to 1000000.000 in steps of 0.001

Default: 1000.000

This setting specifies the value of the GOOSE analog input when the selected RxGOOSE has lost its connectivity with the publisher and the RxGOOSE Analog1 DEFAULT MODE is set to "Default Value." Otherwise this setting has no effect. This setting is stored as an IEEE 754 / IEC 60559 floating point number. Because of the large range of this setting, not all possible values can be stored. Some values can be rounded to the closest possible floating point number.

RxGOOSE Analog1 DEFAULT MODE

Range: Default Value, Last Known

Default: Default Value

When the selected RxGOOSE has lost its connectivity with the publisher and this setting is "Last Known," the value of the RxGOOSE Analog1 FlexLogic operand remains at the last received value. When the selected RxGOOSE has lost its connectivity with the publisher and this setting value is "Default Value," then the RxGOOSE Analog1 FlexLogic operand is defined by the RxGOOSE Analog1 DEFAULT setting. After restart, until a message is received, the operand value is the default value.

RxGOOSE Analog1 UNITS

Range: up to 4 characters

Default: empty string

This setting specifies a four-character string that is used in the actual values display of RxGOOSE Analog1.

RxGOOSE Analogs are floating-point values, with no units. The RxGOOSE UNIT and PU base settings allow the user to configure RxGOOSE Analog, so that it can be used in a FlexElement.

RxGOOSE Analogs that represent current, voltage, power, frequency, angles, or power factor can be used in a FlexElement. The following text must be used in the UNITS setting, to represent these types of analogs: A, V, W, var, VA, Hz, deg, and no text (blank setting) for power factor.

RxGOOSE Analogs can be compared to other RxGOOSE Analogs with any character string or no string.

RxGOOSE Analog1 PU Base in kilo

Range: 0.000 to 1000000000.000 in steps of 0.001

Default: 1.000

5

This setting specifies the per-unit base value for other C70 features to use with the RxGOOSE Analog1 operand. A FlexElement for instance subtracts two quantities after converting their values to integers rescaled to a common base, the common base being the largest of the base values of the two quantities. If one of quantities is RxGOOSE Analog1 and its per-unit base value is not appropriate, the rescaling operation can result in unnecessary loss of precision or overflow in the integer result. The FlexElement Base Units table in the Settings > FlexLogic > FlexElements section later, which tabulates the per-unit base value used by its pickup setting and implies the per-unit base used by other FlexAnalogs, can be of use in selecting a value for the **RxGOOSE Analog1 PU** setting.

Some UR elements have requirements for the type of input operands, for instance current type or voltage type. These elements assume that RxGOOSE Analog operands are of whatever type is necessary to meet these requirements.

The per-unit base setting represents thousands, not single units. For example, a PU base of 1.000 is actually 1000 and a PU base of 0.001 is 1.

When using RxGOOSE Analogs and PU base in FlexElements, the largest value that can be displayed in the FlexElement actual values is 2,140,000.000.

Reports

Navigate to **Settings > Product Setup > Communications > IEC 61850 > Reports**.

Report settings

Navigate to **Settings > Product Setup > Communications > IEC 61850 > Reports > Report Settings**.

ReportSettings rptID

Range: Dyn, Conf

Default: Dyn

When set to Dyn, the RptID attribute in any buffered and unbuffered report control block can be modified by an MMS client while the control block's RptEna attribute is false. The RptID is the name of the report.

ReportSettings optFields

Range: Dyn, Conf

Default: Dyn

When set to Dyn, the OptFlds attribute in any buffered and unbuffered report control block can be modified by an MMS client while the control block's RptEna attribute is false.

ReportSettings bufTime

Range: Dyn, Conf

Default: Dyn

When set to Dyn, the BufTm attribute in any buffered and unbuffered report control block can be modified by an MMS client while the control block's RptEna attribute is false.

ReportSettings trgOps

Range: Dyn, Conf

Default: Dyn

When set to Dyn, the TrgOps attribute in any buffered and unbuffered report control block can be modified by an MMS client while the control block's RptEna attribute is false.

ReportSettings intgPd

Range: Dyn, Conf

Default: Dyn

When set to Dyn, the IntgPd attribute in any buffered and unbuffered report control block can be modified by an MMS client while the control block's RptEna attribute is false.

Buffered and unbuffered reports

Navigate to **Settings > Product Setup > Communications > IEC 61850 > Reports > Buffered Reports** or **Unbuffered Reports**.

Figure 5-33: IEC 61850 buffered report panel

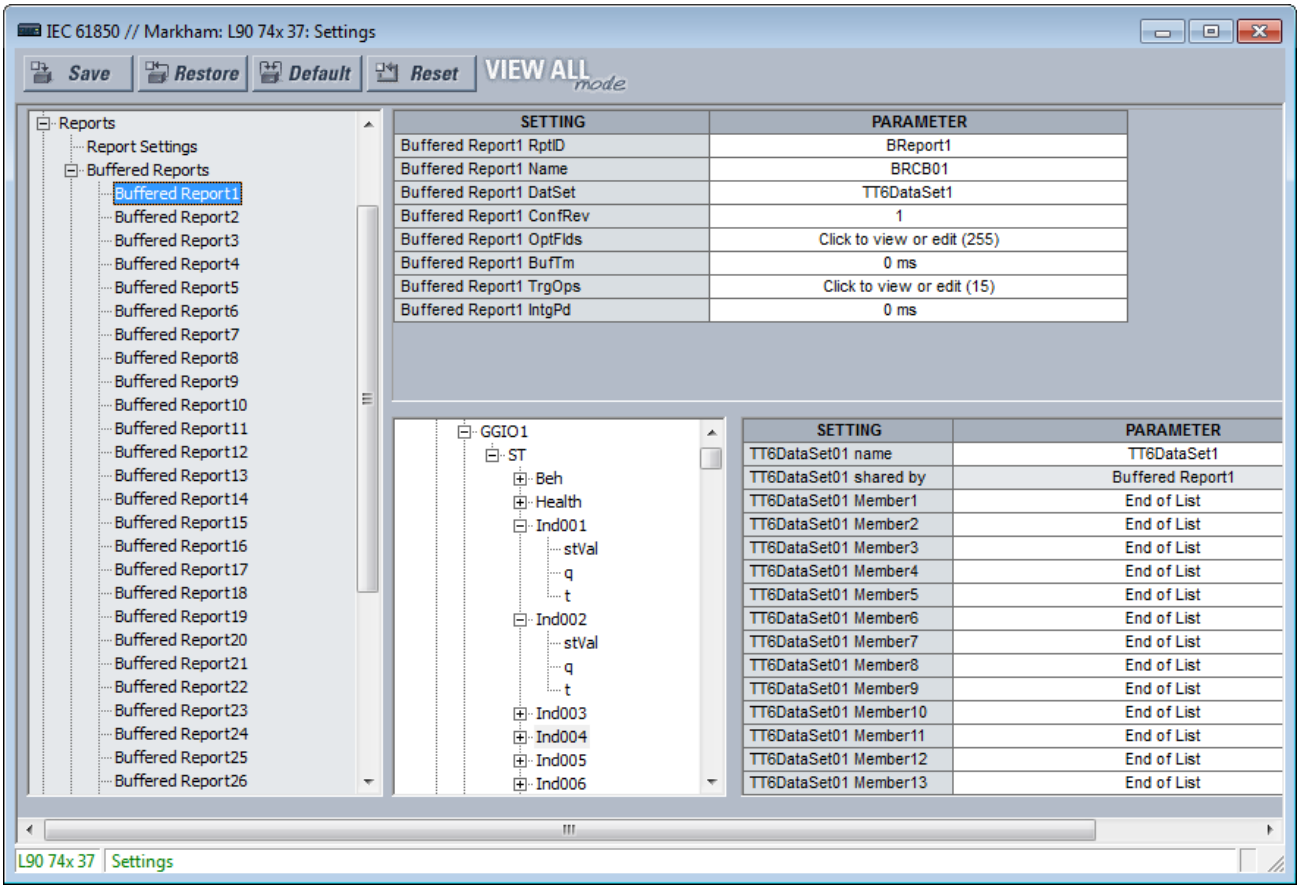

An IEC 61850 Report server is an efficient method to deliver generic substation event information from a single server to a single client, such as a supervisory control IED. A Configurable Report is a UR element implementing an IEC 61850 Report server, either of the buffered or unbuffered kind. The following table lists the number of Configurable Report elements. Each Configurable Report element can report the values of up to 64 FlexLogic or FlexAnalog operands. Buffered report elements queue value changes that occur while the client is offline and delivered when the client re-connects. Up to 512 events can be queued. Unbuffered control blocks purge all value change events when the connection to the client is lost; any events that occur while the client is not connected are lost.

Table 5-11: Number of report elements

	Number
Buffered reports	30
Unbuffered reports	18

When using IEC 61850 Edition 2, configurable Reports interoperate with any client device of any manufacturer that conforms to the IEC 61850 edition 1.0 or 2.0 report client requirements.

When using IEC 61850 Edition 1, configurable Reports interoperate with any client device of any manufacturer that conforms to the IEC 61850 edition 1.0 report client requirements.

The entities whose values are reported by a Configurable Report are known as members. The members are itemized in an ordered list known as a data set. Each Configurable Report can use any one of the data sets provided.

Each enabled Configurable Report transmits an update to its client whenever a value change is detected in one or more of its members. Also, the control block can be configured to send integrity reports containing the present value of all members either on demand from the client or periodically. A TCP handshaking mechanism causes messages that are not read and acknowledged by the client to be retransmitted.

For a Configurable Report to operate, its members must be selected (that is, its data set configured) and a client must open a connection to, configure, and enable its report control block. Control blocks and data sets can be pre-configured by sending the C70 a CID file. See the UR Family Communications Guide for details. EnerVista UR Setup also can be used to select the data set members and to pre-configure the control blocks.

Each buffered report has the following settings.

Buffered Report1 RptID

Range for Edition 2: 0 to 129 VisibleString characters
Range for Edition 1: 0 to 65 VisibleString characters
Default: empty string

The name of the report. The entered value sets the RptID value in Buffered Report1 messages, and it can be used by the client to discriminate Buffered Report1 messages from other messages. If the number of characters entered is zero, the value used for RptID in messages is an ObjectReference to the report's control block, that is, "<LDName>/LLN0BR"BRCB01".

Buffered Report1 Name

Range: 0 to 32 VisibleString characters
Default: BRCB01

The entered value sets the report control block name value for Buffered Report1.

Buffered Report1 DatSet

Range: None, TT6DataSet1, TT6 DataSet2, ..., TT3DataSet01, TT3DataSet02, ...
Default: None

This setting selects the data set whose members' status is reported in Buffered Report1 messages using the UR Setup software designator for the data set. The IEC 61850 name of the data sets are configured in the Datasets panel, as described later.

An ObjectReference to the data set, which consists of the concatenation of the string "<LDName>/LLN0$" and the data set name, is used in the datSet field of report messages, and it can be used by the client to discriminate Buffered Report1 messages from other messages.

The performance of the report is determined by the performance of the selected dataset. When the selection is TT3DataSet01, TT3DataSet02, ... it is possible that transient events can be missed.

To configure a DataSet, select it at the top of the window from the drop-down list, for example DataSet02 shown in the previous figure. In the lower part of the window, drag and drop configuration items to the right side. For example select the **ST Ind001 stVal** item and drag it to DataSet Member 1. Dataset members configured here affect other Report or TxGOOSE control blocks that use the same DataSet.

Buffered Report1 ConfRev

Range: 0 to 4294967295 in steps of 1

Default: 1

The entered value sets the confRev value in Buffered Report1 messages, and it can be used by clients to discriminate report messages of the expected configuration revision from messages of a different revision. The standard requires that confRev be incremented each time the members or the order of the members is changed, and each time the data set name is changed. The standard states that the value of 0 is reserved.

Buffered Report1 OptFlds

Range: The check box for each individual bit can be enabled or not (see figure)

Default: All bits enabled/ true

The OptFlds setting is bitstring that controls which of the optional fields are included in report messages. The figure shows the available option bits. To reduce message size, uncheck any fields that are not needed.

Figure 5-34: Options for buffered report messages (Edition 2)

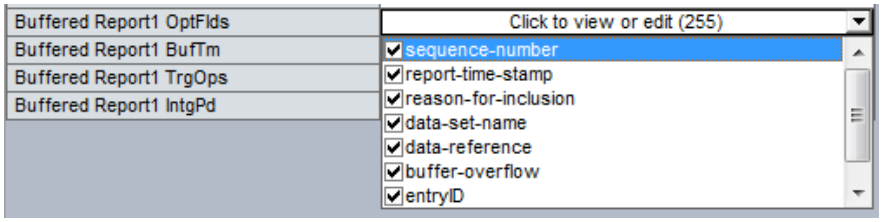

Buffered Report1 BufTm

Range: 0 to 4294967295 in steps of 1

Default: 0 ms

The entered value sets the time interval in milliseconds for the buffering of events for inclusion in a single report.

Buffered Report1 TrgOps

Range: The check box for an individual bit can be enabled or not

Default: All bits enabled / true

The TrgOps setting is bitstring that controls which trigger conditions are monitored in this report. The options are as follows. Uncheck any trigger conditions that are not needed.

- data-change
- quality-change
- integrity
- general interrogation (IEC 61850 Edition 2)

Buffered Report1 IntgPd

Range: 0 to 4294967295 in steps of 1

Default: 0 ms

The entered value sets the period in milliseconds for generating Buffered Report1 integrity reports. An integrity report includes the values of all members of the referenced data set, whether a change has occurred or not.

Each unbuffered report has the following settings.

Unbuffered Report1 RptID

Range for Edition 2: 0 to 129 VisibleString characters
Range for Edition 1: 0 to 65 VisibleString characters
Default: empty string

The name of the report. The entered value sets the RptID value in Unbuffered Report1 messages, and it can be used by the client to discriminate Unbuffered Report1 messages from other messages. If the number of characters entered is zero, the value used for RptID in messages is an ObjectReference to the report's control block, that is, "<LDName>/LLN0RP"URCB01".

Unbuffered Report1 Name

Range: 0 up to 32 VisibleString characters
Default: URCB01

The entered value sets the report control block name value for Unbuffered Report1.

Unbuffered Report1 DatSet

Range: None, TT6DataSet1, TT6 DataSet2, ..., TT3DataSet01, TT3DataSet02, ...
Default: None

This setting selects the data set whose members' status is reported in Unbuffered Report1 messages using the UR Setup software designator for the data set. The IEC 61850 name of the data sets are configured in the Datasets panel, as described later.

An ObjectReference to the data set, which consists of the concatenation of the string "<LDName>/LLN0$" and the data set name, is used in the datSet field of report messages, and it can be used by the client to discriminate Unbuffered Report1 messages from other messages.

The performance of the report is determined by the performance of the selected dataset. When the selection is TT3DataSet01, TT3DataSet02, ... it is possible that transient events can be missed.

Unbuffered Report1 ConfRev

Range: 0 to 4294967295 in steps of 1
Default: 1

The entered value sets the confRev value in Unbuffered Report1 messages, and it can be used by clients to discriminate report messages of the expected configuration revision from messages of a different revision. The standard requires that confRev be incremented each time the members or the order of the members is changed, and each time the data set name is changed. The standard states that the value of 0 is reserved.

Unbuffered Report1 OptFlds

Range: The check box for an individual bit can be enabled or not
Default: All bits enabled / true

The OptFlds setting is bitstring that controls which of the optional fields are included in report messages. The options are as follows. To reduce message size, uncheck any fields that are not needed.

- sequence-number
- report-time-stamp
- reason-for-inclusion
- data-set-name
- data-reference
- conf-revision

For IEC 61850 Edition 2, the OptFlds bits buffer-overflow and entryID also listed are not applicable to unbuffered reports even though the bits exist in the protocol. They are unchecked by default.

For IEC 61850 Edition 1, the entryID also listed is not applicable to unbuffered reports even though the bits exist in the protocol. It is unchecked by default.

Unbuffered Report1 BufTm

Range: 0 to 4294967295 in steps of 1
Default: 0 ms

The entered value sets the time interval in milliseconds for the buffering of events for inclusion into a single report.

Unbuffered Report1 TrgOps

Range: The check box for an individual bit can be enabled or not

Default: All bits enabled / true

The TrgOps setting is bitstring that controls which trigger conditions are monitored in this report. The options are as follows. Uncheck any trigger conditions that are not needed.

- data-change
- quality-change
- integrity
- general interrogation (IEC 61850 Edition 2)

Unbuffered Report1 IntgPd

Range: 0 to 4294967295 in steps of 1

Default: 0 ms

The entered value sets the period in milliseconds for generating Unbuffered Report1 integrity reports. An integrity report includes the values of all members of the referenced data set, whether a change has occurred or not.

DataSets

Navigate to **Settings > Product Setup > Communications > IEC 61850 > DataSets**.

As outlined, the members whose values are communicated by these services are itemized in an ordered list known as a data set. Each UR with the IEC 61850 option has 18 data sets (six fast and 12 slow). Each data set can contain as many as 64 members. Any data set can be used simultaneously by any number of TxGOOSE elements and/or by any number of Configurable Report elements. The UR software can configure any FlexLogic operands and any FlexAnalog operands as members.

Figure 5-35: IEC 61850 DataSets (Edition 2)

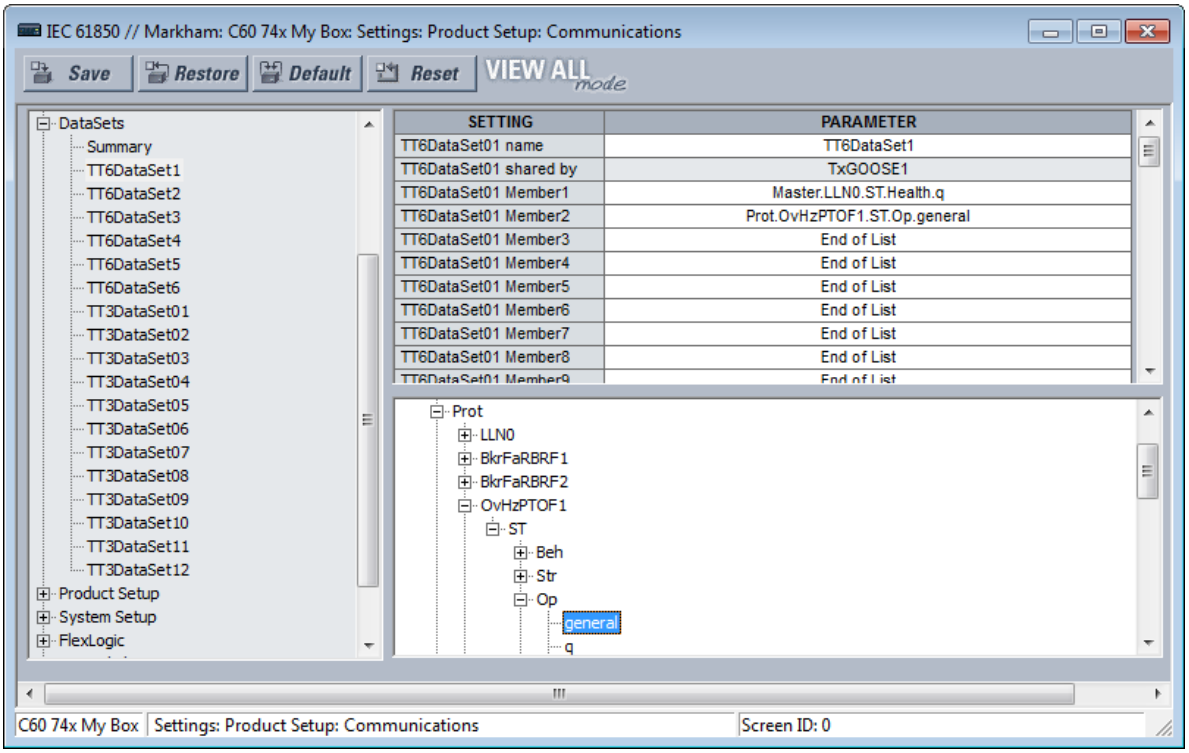

UR Setup software requires data set members to be IEC 61850 data objects or data attributes with Functional Constraint ST or MX. Certain FlexLogic and FlexAnalog operands have factory-assigned data attributes as tabulated in the UR Family Communications Guide. All FlexLogic and FlexAnalog operands can be user-assigned to GGIO1 or GGIO4 data attributes, so that operands without factory-assigned data attributes can still have their values published. See the GGIO1 and GGIO4 sections later for details.

Datasets used by TxGOOSE1, TxGOOSE2, and/or by reports also provide a chatter suppression service for their Boolean members. Oscillation in a value, also known as chatter, can be caused by errors in logic programming, inadequate hysteresis (deadband) on a threshold, or a failed station component. Chatter can flood a communications network with GOOSE messages, degrading response time for all users. If chatter is detected in a Boolean member, TxGOOSE suspends GOOSE event message triggering and report message triggering from that member for as long as the condition exists, and for a minimum period of one second. While sending is suspended, a self-test message identifying the specific data item detected as oscillating is activated.

For a summary of the panels in which the data sets are used, the path is **Settings > Product Setup > Communications > IEC 61850 > DataSets > Summary**.

For the settings, navigate to **Settings > Product Setup > Communications > IEC 61850 > DataSets > TT6DataSet1** for the first data set.

Copy and paste functions are available when right-clicking a DataSet. They allow the target dataset to be configured based on its order code. If some dataset items are not supported, they are not pasted, and a warning message shows a list of dataset items that were not supported and not pasted. The **DataSet name** is not copied or pasted. In short, use this feature to copy a **DataSet Member** setting and paste it into another Member setting, a text file, or Word, as examples.

Figure 5-36: Member right-click

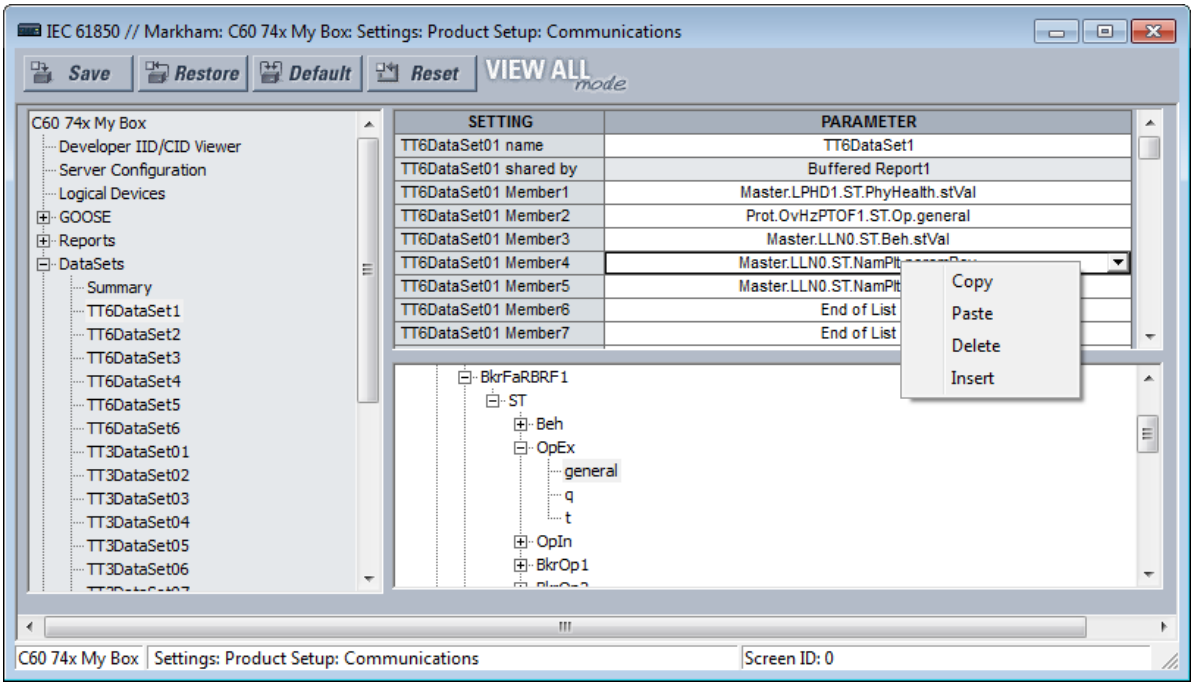

DataSet01 name

Range: 0 to 32 VisibleString characters
Default: DataSet01

The value entered sets the name of the data set, which is required to be unique within the UR for proper operation. The value entered sets the name of the data set, which is required to be unique within the UR for proper operation. Fast datasets start with TT6, and slow datasets start with TT3. Up to six fast datasets are allowed. Up to four fast GOOSE datasets are allowed.

An ObjectReference to the data set consists of a string that is the concatenation of "<LDName>/LLN0$" and the DataSet01 name setting value. An ObjectReference to the data set is published in the datSet field of TxGOOSE messages, and it can be used by subscribers to discriminate the messages of that TxGOOSE from other GOOSE messages. An ObjectReference to the data set is optionally published in the DatSet field of Report messages. Valid characters are upper and lowercase letters, digits, and the underscore (_) character. The first character must be a letter.

DataSet01 shared by

Range: 0 to 32 VisibleString characters
Default:

Names of all control blocks that use this DataSet. Read-only field.

DataSet01 Member1

Range: End of List or any instantiated 61850 data object or data attribute with Functional Constraint ST or MX
Default: End of List

This setting specifies the first member in TxGOOSE1 messages. There is a similar setting for each of the up to 64 members that the UR allows in a Dataset. Only values of members before the first set to End of List are published.

Select the member from the drop-down list. Or right-click an entry to copy, paste, delete, or insert.

Product setup

Navigate to **Settings > Product Setup > Communications > IEC 61850 > Product Setup**.

Security

This setting applies to IEC 61850 Edition 2.

Navigate to **Settings > Product Setup > Communications > IEC 61850 > Product Setup > Security**.

Figure 5-37: IEC 61850 Security

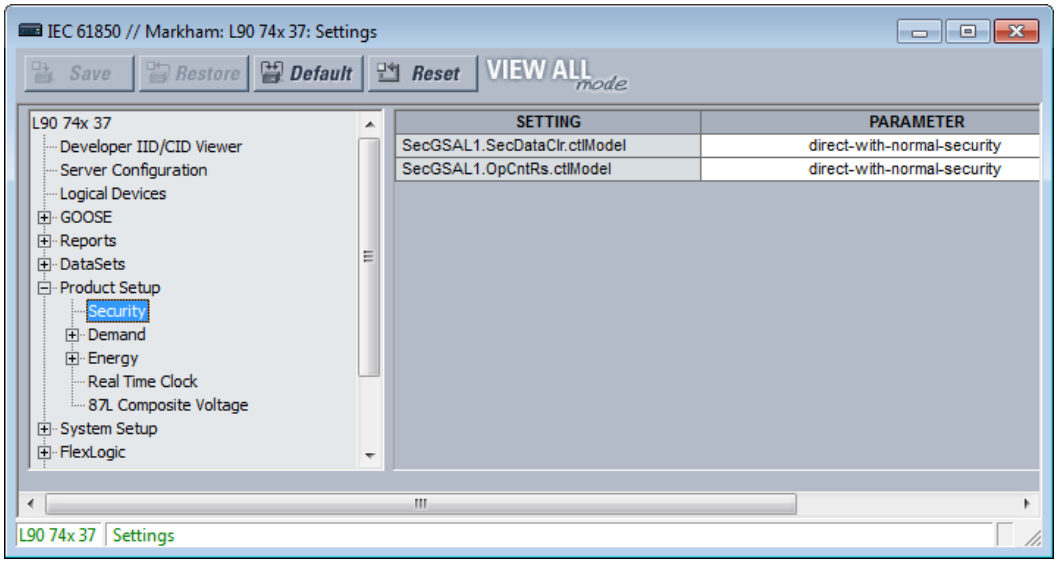

SecGSAL1.SecDataClr.ctlModel

Range: direct-with-normal-security, sbo-with-normal-security
Default: direct-with-normal-security

This setting selects the control model that clients must use to clear security data via commands to SecGSAL1.SecDataClr. "sbo" here is select-before-operate.

SecGSAL1.OpCntRs ctlModel

Range: direct-with-normal-security, sbo-with-normal-security

Default: direct-with-normal-security

This setting selects the control model that clients must use to clear security data via commands to SecGSAL1.OpCntRs. "sbo" here is select-before-operate.

Demand

Deadband parameters of measured values related to the Demand metering are configured here.

Energy

Deadband parameters of measured values related to the Energy metering are configured here.

Real Time Clock

This setting applies to IEC 61850 Edition 2.

Navigate to **Settings > Product Setup > Communications > IEC 61850 > Product Setup > Real Time Clock**.

Figure 5-38: IEC 61850 Real Time Clock

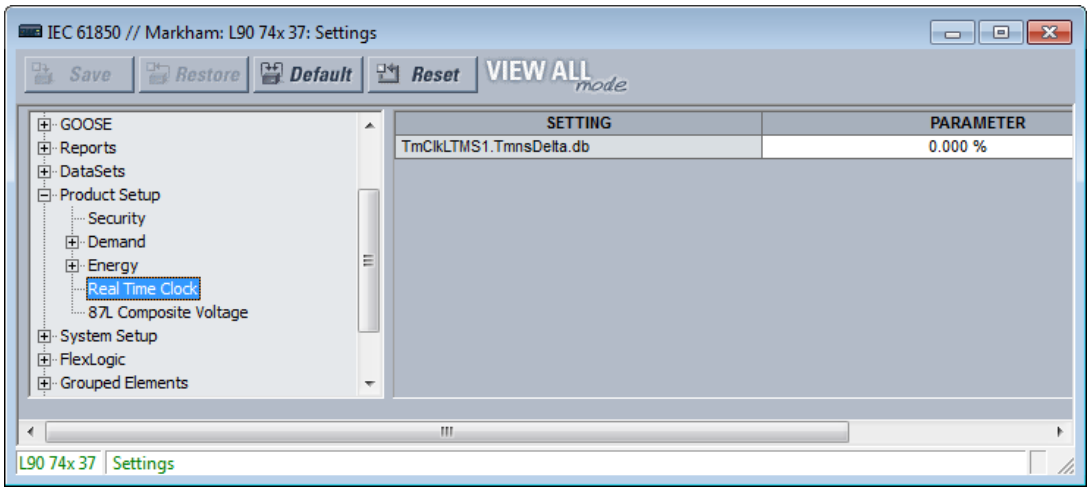

TmClkLTMS1.TmnsDelta.db

Range: 0.000 to 100.000 %

Default: 0.000 %

This setting is a deadband setting and is used by the relay to determine when to update the "mag" and "cVal" values from the associated "instMag" and "instCVal" values. The value shall represent the percentage of difference between maximum and minimum in units of 0.001%. The minimum and maximum values for TmnsDelta data object are -500000000 ns and 500000000 ns respectively and for example, a setting value of 0.002% results in the dead banded value of (500000000 - (-500000000)) * 0.002 / 100 = 20000 ns. The default setting value of 0.000% does not update the "mag" and "cVal" values.

Deadband settings

A deadband is a range in which no action occurs, usually expressed as a percentage.

The IEC 61850 panels contain hundreds of deadband settings, such as in the following panels: Product Setup > Real Time Clock, FlexLogic, Control Elements, and GGIO4. Each panel is not outlined here. The FlexLogic category applies to IEC 61850 Edition 2.

Deadband setting names all end either with "DB" or .db. As they all work the same way, but each on a different analog value, a single description applicable to all deadband settings is given here. The analog value that each deadband setting applies is usually obvious from the name of the setting. However, a tabulation of the analog values and their associated deadband setting can be found in the UR Family Communications Guide.

Figure 5-39: Deadband settings with .db suffix (Edition 2)

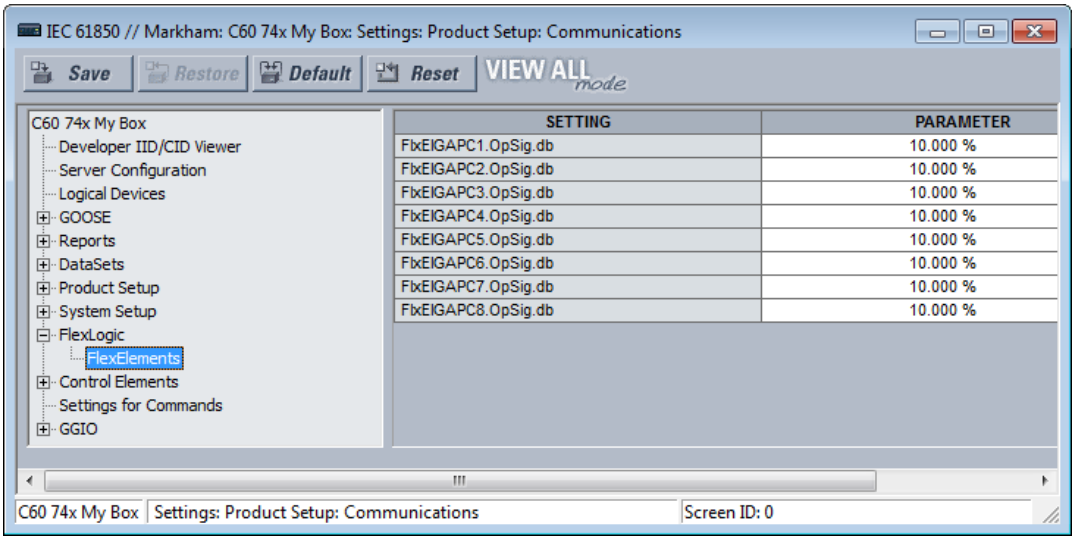

GOOSE, buffered report, and unbuffered report messages are for the most part transmitted only when there is a value change in one or more of their members. Most analog values continuously dither by an amount that is not significant. Were a report to be sent each time an insignificant analog value change occurred, then the communications network floods with GOOSE and report messages, degrading response time for all users.

To control this, a deadband setting is provided for each analog value. Also, in addition to the present actual value of each analog ("instMag" in the following figure), there is a deadbanded value ("mag" in the figure), which is updated with the present value only when the difference between the two exceeds the deadband setting (db in the figure). Changes to this deadbanded value trigger transmissions when included in GOOSE and report data sets.

Figure 5-40: Deadband settings

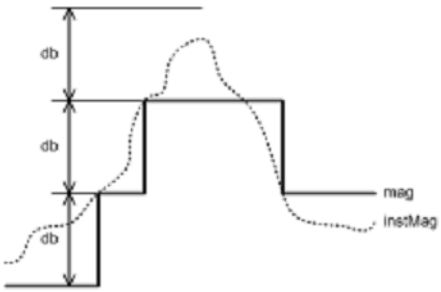

Deadband settings are entered in UR Setup software in units of percent of the difference between the "max." and "min." of the associated analog value. A zero deadband setting suppresses transmission triggering. The range of deadband settings is 0.000 to 100.000% in steps of 0.001. The default value is 0.000%.

GGIO4 elements have individual settings for "min." and "max." The min. and max. for FlxElGAPC#.OpSig.db (FLEXELEMENT # OpSig) are -50 pu and +50 pu respectively. The min. value for all other quantities is 0. The max. values are as follows:

- Phase current — 46 x phase CT primary setting
- Neutral current — 46 x ground CT primary setting
- Ground current (sensitive ground CT) — 4.6 x sensitive ground CT primary setting
- Phase, phase-to-phase, and sequence voltage — 275 x phase VT ratio setting

- Auxiliary voltage — 275 x auxiliary VT ration setting
- Power (real, reactive, apparent, 3-phase, and 1-phase) — 4 × phase CT primary setting × 1.5 × VT Secondary setting × VT ratio setting
- Energy (real or imaginary) — 4 × phase CT primary setting × 1.5 × VT Secondary setting × VT ratio setting x 1 hour
- Frequency — 90 Hz
- Frequency rate of change — 90 Hz/s
- Power factor — 2
- Angle — 360 degrees

Select the deadband settings from knowledge of the characteristics of the power system quantity measured and knowledge of the demands of the applications receiving the measurement via GOOSE or report such that changes of significance to the application are promptly reported, yet the network is not overly burdened with event messages.

Signal sources

Deadband parameters of measured values related to the signal sources are configured here.

Breakers

The UR breaker control and status monitoring elements have certain settings that configure how the IEC 61850 protocol interacts with these elements. These settings are described in this section. See the Breakers section in the System Setup section of this chapter for details on the operation of breaker control elements.

Navigate to **Settings > Communications > IEC 61850 > System Setup > Breakers > Breaker 1** to access the settings that configure the IEC 61850 protocol interface with the first breaker control and status monitoring element. The settings and functionality for the others are similar.

Figure 5-41: IEC 61850 Breaker panel (Edition 2)

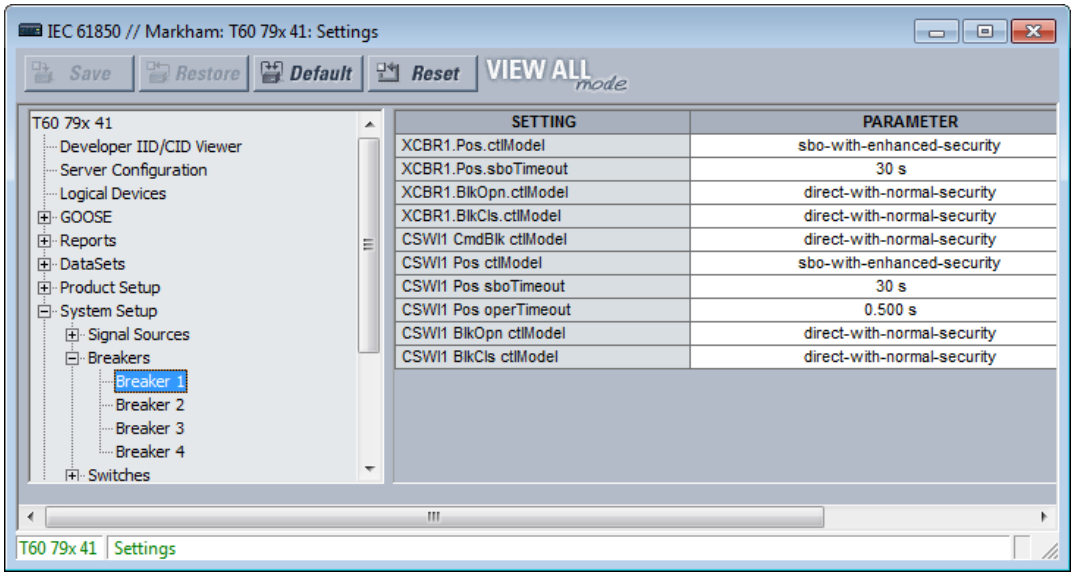

SETTING	PARAMETER
XCBR1.Pos.ctlModel	sbo-with-enhanced-security
XCBR1.Pos.sboTimeout	30 s
XCBR1.BlkOpn.ctlModel	direct-with-normal-security
XCBR1.BlkCls.ctlModel	direct-with-normal-security
CSWI1 CmdBlk ctlModel	direct-with-normal-security
CSWI1 Pos ctlModel	sbo-with-enhanced-security
CSWI1 Pos sboTimeout	30 s
CSWI1 Pos operTimeout	0.500 s
CSWI1 BlkOpn ctlModel	direct-with-normal-security
CSWI1 BlkCls ctlModel	direct-with-normal-security

XCBR1 Pos ctlModel

Range: status-only, direct-with-normal-security, sbo-with-normal-security, direct-with-enhanced-security, sbo-with-enhanced-security

Default: sbo-with-enhanced-security

This setting selects the control model clients must use to successfully control the breaker 1 signals marked Bkr0XCBR1.PosOpn.ctlVal and Bkr0XCBR1.PosCls.ctlVal on the Breaker Control Logic (Sheet 1 of 2) diagram in the Settings > System Setup section later in this chapter. These signals force a breaker 1 three-phase trip or close control while the operand selected by setting XCBR1 ST.LOC OPERAND is not active.

"sbo" here is select-before-operate. Enhanced security means that the UR reports to the client the breaker 1 position at the end of the command sequence.

XCBR1 Pos sboTimeout

Range: 2 to 60 s in steps of 1 s
Default: 30 s

This setting specifies the maximum time between a select and an operate command to breaker 1 signals marked Bkr0XCBR1.PosOpn.ctlVal and Bkr0XCBR1.PosCls.ctlVal in order for the operand to be successful. This setting is only relevant when XCBR1 Pos ctlModel is sbo-with-normal-security or sbo-with-enhanced-security.

XCBR1 BlkOpn ctlModel

Range: status-only, direct-with-normal-security, sbo-with-normal-security
Default: direct-with-normal-security

This setting selects the control model clients must use to successfully control the breaker 1 signal marked Bkr0XCBR1.BlkOpn.ctlVal signal on the Breaker Control Logic (Sheet 1 of 2) diagram in the Settings > System Setup section later. This signal when true blocks breaker 1 trip control while the operand selected by setting XCBR1 ST.LOC OPERAND is not active.

XCBR1 BlkCls ctlModel

Range: status-only, direct-with-normal-security, sbo-with-normal-security
Default: direct-with-normal-security

This setting selects the control model clients must use to successfully control the breaker 1 signal marked Bkr0XCBR1.BlkCls.ctlVal signal on the Breaker Control Logic (Sheet 1 of 2) diagram in the Settings > System Setup section later. This signal when true blocks breaker 1 close control while the operand selected by setting XCBR1 ST.LOC OPERAND is not active.

CSWI1 CmdBlk ctlModel

Range: status-only, direct-with-normal-security, sbo-with-normal-security
Default: direct-with-normal-security

This setting determines the initial IEC 61850 control model (ctlModel) values for CmdBlk DataObjects in the CSWI logical node.

CSWI1 Pos ctlModel

Range: status-only, direct-with-normal-security, sbo-with-normal-security, direct-with-enhanced-security, sbo-with-enhanced-security
Default: direct-with-normal-security

This setting selects the control model clients must use to successfully control the breaker 1 signals marked BkrCSWI1.PosOpn.ctlVal and BkrCSWI1.PosCls.ctlVal on the Breaker Control Logic (Sheet 1 of 2) diagram in the Settings > System Setup section earlier. These signals force a breaker 1 three-phase trip or close control while the operand selected by setting XCBR1 ST.LOC OPERAND is not active.

CSWI1 Pos sboTimeout

Range: 2 to 60 s in steps of 1 s
Default: 30 s

This setting specifies the maximum time between a select and an operate command to breaker 1 via BkrCSWI1.Pos in order for the operand to be successful. This setting is only relevant when CSWI1 Pos ctlModel is sbo-with-normal-security or sbo-with-enhanced-security.

CSWI1 Pos operTimeout

Range: 0.000 to 2.000 s in steps of 0.001s
Default: 0.100 s

This setting applies to IEC 61850 Edition 2.

This setting specifies the maximum time between an operate command to breaker 1 via BkrCSWI1.Pos until BkrCSWI1.Pos.stVal enters the commanded state. The command terminates if the commanded state is not reached in the set time.

CSWI1 BlkOpn ctlModel

Range: status-only, direct-with-normal-security, sbo-with-normal-security

Default: direct-with-normal-security

This setting determines the initial IEC 61850 control model (ctlModel) values for BlkOpn DataObjects in the CSWI logical node.

CSWI1 BlkCls ctlModel

Range: status-only, direct-with-normal-security, sbo-with-normal-security

Default: direct-with-normal-security

This setting determines the initial IEC 61850 control model (ctlModel) values for BlkCls DataObjects in the CSWI logical node.

Switches

The UR disconnect switch control and status monitoring elements have certain settings that configure how the IEC 61850 protocol interacts with these elements. These settings are described in this section. See the Settings > System Setup > Disconnect Switches section later in this chapter for details on the operation of the disconnect switch control elements.

Navigate to **Settings > Product Setup > Communications > IEC 61850 > System Setup > Switches > Switch 1** to access the settings that configure the IEC 61850 protocol interface with the first disconnect switch control and status monitoring element. The settings and functionality for the others are similar.

Figure 5-42: Switch panel

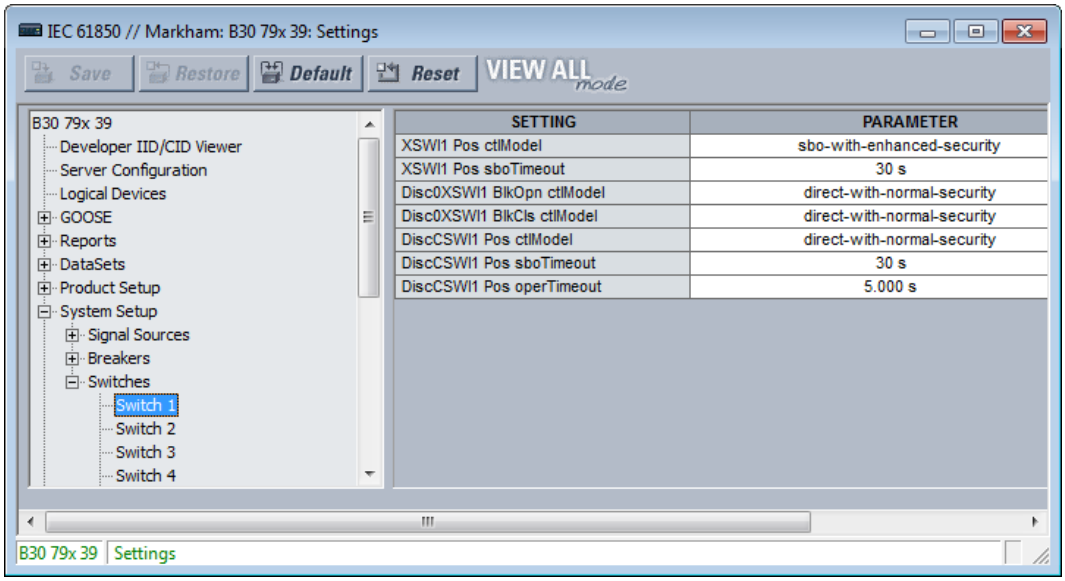

XSWI1 Pos ctlModel

Range: status-only, direct-with-normal-security, sbo-with-normal-security, direct-with-enhanced-security, sbo-with-enhanced-security

Default: sbo-with-enhanced-security

This setting selects the control model that clients must use to successfully control the disconnect switch 1 signals marked Disc0XCBR1.PosOpn.ctlVal and Disc0XCBR1.PosCls.ctlVal on the Disconnect Switch Logic diagram in the Settings > System Setup section later. These signals force a disconnect switch trip or close control while the operand selected by setting XSWI1 ST.LOC OPERAND is not active.

"sbo" here is select-before-operate. Enhanced security means that the C70 reports to the client the disconnect switch 1 position the end of the command sequence.

XSWI1 Pos sboTimeout

Range: 2 to 60 s in steps of 1 s

Default: 30 s

This setting specifies the maximum time between a select and an operate command to disconnect switch 1 signals marked Disc0XCBR1.PosOpn.ctlVal and Disc0XCBR1.PosCls.ctlVal in order for the operand to be successful. This setting is only relevant when XSWI1 Pos ctlModel is sbo-with-normal-security or sbo-with-enhanced-security.

Disc0XSWI1 BlkOpn ctlModel

Range: status-only, direct-with-normal-security, sbo-with-normal-security

Default: direct-with-normal-security

This setting selects the control model clients must use to successfully control the disconnect switch 1 signal marked DiscCSWI1.BlkOpn.ctlVal signal on the Disconnect Switch Logic diagram in the Settings > System Setup section later. This signal when true blocks disconnect switch 1 trip control while the operand selected by setting XSWI1 ST.LOC OPERAND is not active.

Disc0XSWI1 BlkCls ctlModel

Range: status-only, direct-with-normal-security, sbo-with-normal-security

Default: direct-with-normal-security

This setting selects the control model clients must use to successfully control the disconnect switch 1 signal marked DiscCSWI1.BlkCls.ctlVal signal on the Disconnect Switch Logic diagram in the Settings > System Setup section later. This signal when true blocks disconnect switch 1 close control while the operand selected by setting XSWI1 ST.LOC OPERAND is not active.

Disc0CSWI1 Pos ctlModel

Range: status-only, direct-with-normal-security, sbo-with-normal-security, direct-with-enhanced-security, sbo-with-enhanced-security

Default: direct-with-normal-security

This setting selects the control model clients must use to successfully control the disconnect switch 1 signals marked DiscCSWI1.PosOpn.ctlVal and DiscCSWI1.PosCls.ctlVal on the Disconnect Switch Logic diagram in the Settings > System Setup section later. These signals force a disconnect switch trip or close control while the operand selected by setting XSWI1 ST.LOC OPERAND is not active.

Disc0CSWI1 Pos sboTimeout

Range: 2 to 60 s in steps of 1 s

Default: 30 s

This setting specifies the maximum time between a select and an operate command to disconnect switch 1 via BkrCSWI1.Pos in order for the operand to be successful. This setting is only relevant when CSWI1 Pos ctlModel is sbo-with-normal-security or sbo-with-enhanced-security.

Disc0CSWI1 Pos operTimeout

Range: 0.000 to 65.535 s in steps of 0.001s

Default: 5.000 s

This setting specifies the maximum time between an operate command to disconnect switch 1 via BkrCSWI1.Pos until BkrCSWI1.Pos.stVal enters the commanded state. The command terminates if the commanded state is not reached in the set time.

Setting Groups

The UR implements a setting groups element as detailed in the Control Elements > Setting Groups section of this chapter. The active setting group and the setting group open for edits can be selected via MMS commands SelectActiveSG and SelectEditSG. The setting related to these IEC 61850 commands are described here.

Navigate to **Settings > Product Setup > Communications > IEC 61850 > Control Elements > Setting Groups** to access the setting that configures the IEC 61850 setting group commands.

Figure 5-43: Setting Groups panel (Edition 2)

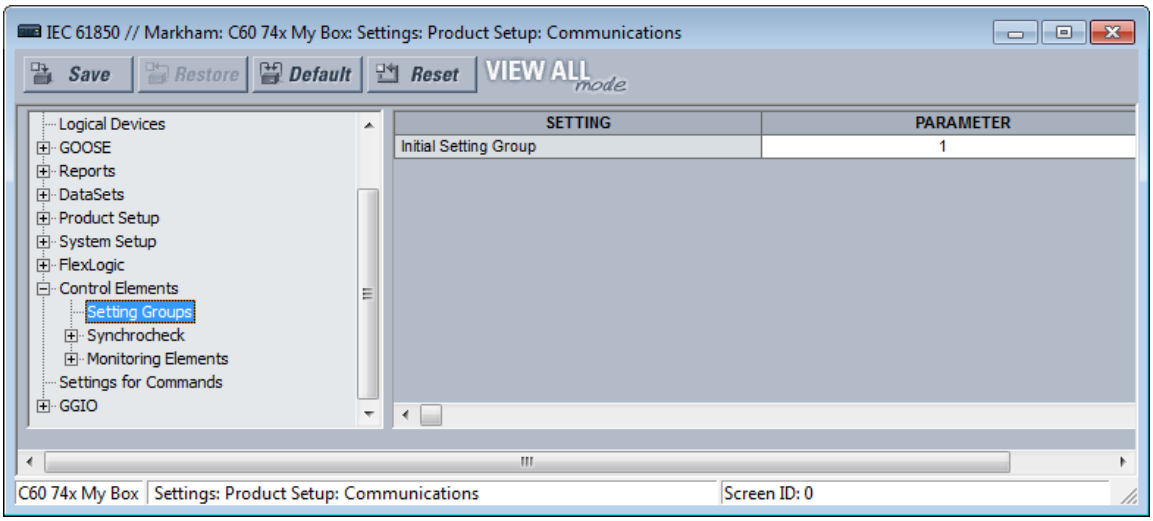

Initial Setting Group

Range: 1 to 6 in steps of 1

Default: 1

The entered value sets the initial value of the non-volatile register normally controlled by the service SelectActiveSG. This initialization occurs only on the UR reboot immediately following the receipt of a valid CID file.

This setting is not mapped into the IEC 61850 information model, but sets the value of SettingControl element attribute actSG in SCL files.

The **Initial Setting Group** value is initialized when **Control Elements > Setting Groups > Control Mode** is set to "IEC61850 Client." When **Control Elements > Setting Groups > Control Mode** is set to "Local," the **Initial Setting Group** value is ignored, and the priority scheme selects the Active setting group immediately after initialization.

Commands

The UR implements a number of clear records commands as detailed in the Commands and Targets chapter of this manual. Several of these commands also can be issued via IEC 61850. The settings related to these IEC 61850 commands are described here.

Navigate to **Settings > Product Setup > Communications > IEC 61850 > Settings for Commands** to access the settings that configure the IEC 61850 protocol interface for record clear commands. The content varies with relay capability.

Figure 5-44: Commands panel (Edition 2)

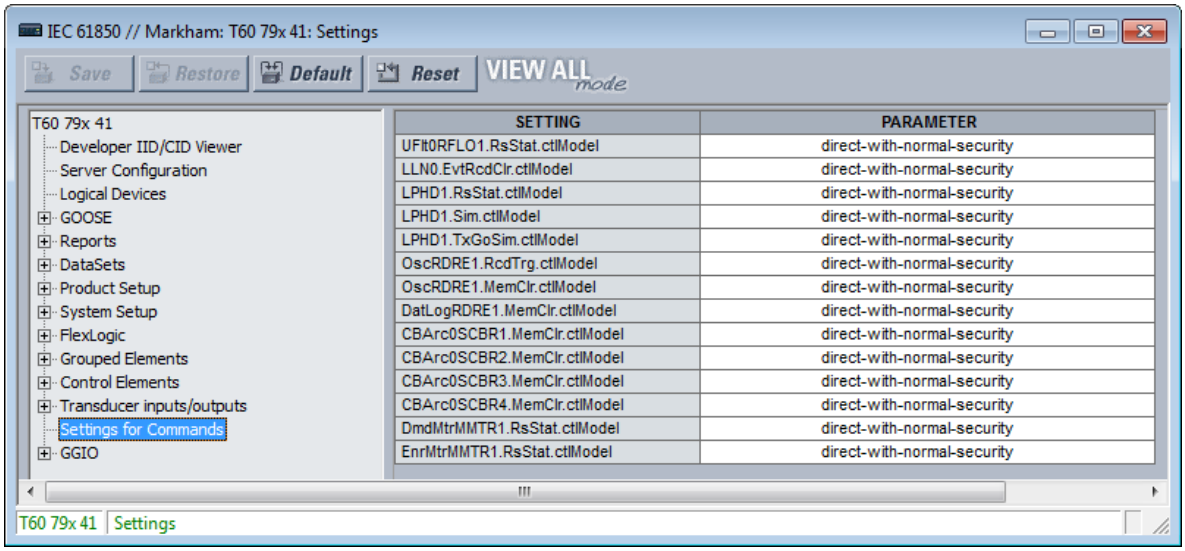

SETTING	PARAMETER
UFlt0RFLO1.RsStat.ctlModel	direct-with-normal-security
LLN0.EvtRcdClr.ctlModel	direct-with-normal-security
LPHD1.RsStat.ctlModel	direct-with-normal-security
LPHD1.Sim.ctlModel	direct-with-normal-security
LPHD1.TxGoSim.ctlModel	direct-with-normal-security
OscRDRE1.RcdTrg.ctlModel	direct-with-normal-security
OscRDRE1.MemClr.ctlModel	direct-with-normal-security
DatLogRDRE1.MemClr.ctlModel	direct-with-normal-security
CBArc0SCBR1.MemClr.ctlModel	direct-with-normal-security
CBArc0SCBR2.MemClr.ctlModel	direct-with-normal-security
CBArc0SCBR3.MemClr.ctlModel	direct-with-normal-security
CBArc0SCBR4.MemClr.ctlModel	direct-with-normal-security
DmdMtrMMTR1.RsStat.ctlModel	direct-with-normal-security
EnrMtrMMTR1.RsStat.ctlModel	direct-with-normal-security

UFltRptRFLO1.RsStat.ctlModel

Range: direct-with-normal-security, sbo-with-normal-security
Default: direct-with-normal-security

This setting selects the control model clients must use to successfully control the command CLEAR FAULT REPORTS. "sbo" here is select-before-operate. Enhanced security means that the C70 reports to the client the breaker 1 position at the end of the command sequence.

LLN0.EvtRcdClr.ctlModel

Range: direct-with-normal-security, sbo-with-normal-security
Default: direct-with-normal-security

This setting selects the control model clients must use to successfully control the command CLEAR EVENT RECORDS.

LPHD1.RsStat.ctlModel

Range: direct-with-normal-security, sbo-with-normal-security
Default: direct-with-normal-security

This setting selects the control model clients must use to successfully control the command CLEAR ALL RELAY RECORDS.

LPHD1.Sim.ctlModel

Range: direct-with-normal-security, sbo-with-normal-security
Default: direct-with-normal-security

This is a command that can be issued via MMS client to enable simulation mode in the relay.

Enabling the **SIM CTRL VIA MMS** setting allows this MMS command to be accepted by the relay.

LPHD1.TxGoSim.ctlModel

Range: direct-with-normal-security, sbo-with-normal-security
Default: direct-with-normal-security

This MMS command enables TxGOOSE sim Mode.

The sim attribute is set to TRUE in the published GOOSE frames from the relay so that the UR plays the simulator role during the testing and commissioning phases.

OscRDRE1.RcdTrg.ctlModel

Range: direct-with-normal-security, sbo-with-normal-security
Default: direct-with-normal-security

This setting selects the control model clients must use to successfully control the command FORCE TRIGGER.

OscRDRE1.MemClr.ctlModel

Range: direct-with-normal-security, sbo-with-normal-security
Default: direct-with-normal-security

This setting selects the control model clients must use to successfully control the command CLEAR OSCILLOGRAPHY.

DatLogRDRE1.MemClr.ctlModel

Range: direct-with-normal-security, sbo-with-normal-security
Default: direct-with-normal-security

This setting selects the control model clients must use to successfully control the command CLEAR DATA LOGGER.

CBArc0SCBR1.MemClr.ctlModel

Range: direct-with-normal-security, sbo-with-normal-security
Default: direct-with-normal-security

This setting selects the control model clients must use to successfully control the command CLEAR ARC AMPS 1.

DmdMtrMMTR1.RsStat.ctlModel

Range: direct-with-normal-security, sbo-with-normal-security
Default: direct-with-normal-security

This setting selects the control model clients must use to successfully control the command CLEAR DEMAND.

EnrMtrMMTR1.RsStat.ctlModel

Range: direct-with-normal-security, sbo-with-normal-security
Default: direct-with-normal-security

This setting selects the control model clients must use to successfully control the command CLEAR ENERGY.

GGIO1

GGIO1 is a UR feature that allows up to 128 UR FlexLogic operands to be user-mapped to IEC 61850 information model data attributes.

For the value of a FlexLogic operand to be read via MMS, included in TxGOOSE messages, or included in buffered/unbuffered reports, the value must be assigned to a data attribute. GGIO1 allows those FlexLogic operands that have not yet been factory-assigned to a data attribute to be user-assigned to a generic data attribute, and thus have their values included in IEC 61850 communications.

Navigate to **Settings > Product Setup > Communications > IEC 61850 > GGIO > GGIO1** to access the settings for GGIO1.

Figure 5-45: IEC 61850 GGIO1 panel (Edition 2)

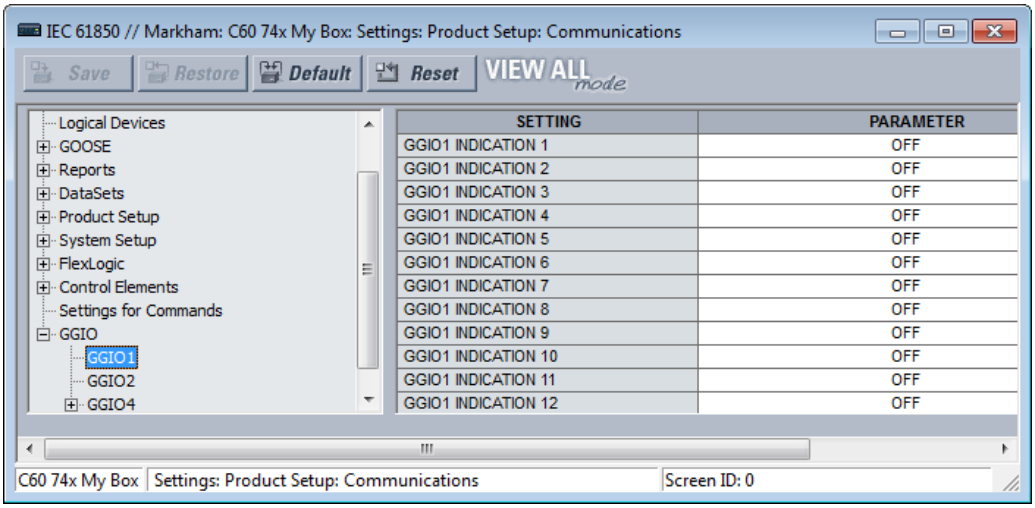

GGIO1 INDICATION 1

Range: any FlexLogic operand

Default: OFF

This setting selects the FlexLogic operand whose value is mapped into the IEC 61850 data attribute <LDName>/GGIO1.Ind001.stVal. See the FlexLogic section in this chapter for a list of FlexLogic operands.

GGIO1 INDICATION 2

Range: any FlexLogic operand

Default: OFF

Selects the FlexLogic operand mapped to <LDName>/GGIO1.Ind002.stVal, and so on.

GGIO2

Virtual Inputs are controllable FlexLogic operands that can be controlled via IEC 61850 commands to GGIO2, by DNP, by Modbus, and by the UR front panel. The settings related to these IEC 61850 commands are described here.

Navigate to **Settings > Product Setup > Communications > IEC 61850 > GGIO > GGIO2** to access the settings that configure the IEC 61850 protocol interface for Virtual Input commands.

Figure 5-46: GGIO2 panel (Edition 2)

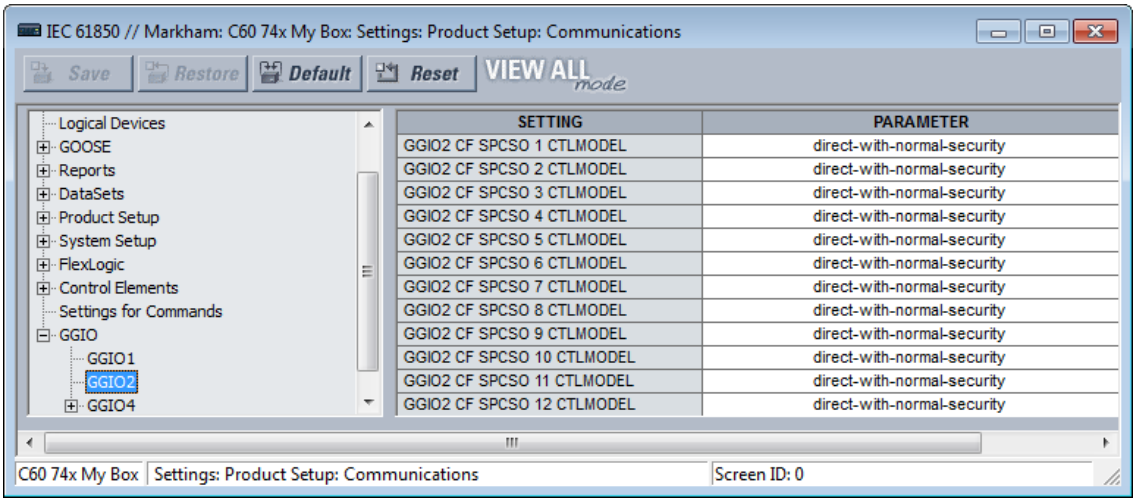

GGIO2 CF SPCSO 1 CTLMODEL

Range: status-only, direct-with-normal-security, sbo-with-normal-security

Default: direct-with-normal-security

This setting selects the control model clients must use to successfully control Virtual Input 1. "sbo" here is select-before-operate.

GGIO2 CF SPCSO 2 CTLMODEL

Range: status-only, direct-with-normal-security, sbo-with-normal-security

Default: direct-with-normal-security

Selects the control model for Virtual Input 2, and so on.

GGIO4

GGIO4 is a UR feature that allows up to 32 UR FlexAnalog operands to be user-mapped to an IEC 61850 information model data attribute.

For the value of a FlexAnalog operand to be read via MMS, included in TxGOOSE messages, or included in buffered/unbuffered reports, the value must be assigned to a data attribute. GGIO4 allows those FlexAnalog operands that have not yet been factory-assigned to a data attribute to be user-assigned to a generic data attribute, and thus have their values included in IEC 61850 communications.

Navigate to **Settings > Product Setup > Communications > IEC 61850 > GGIO > GGIO4 > GGIO4.AnIn1** to access the settings for the first GGIO4 value. The settings and functionality for the others are similar.

Figure 5-47: GGIO4 panel (Edition 2)

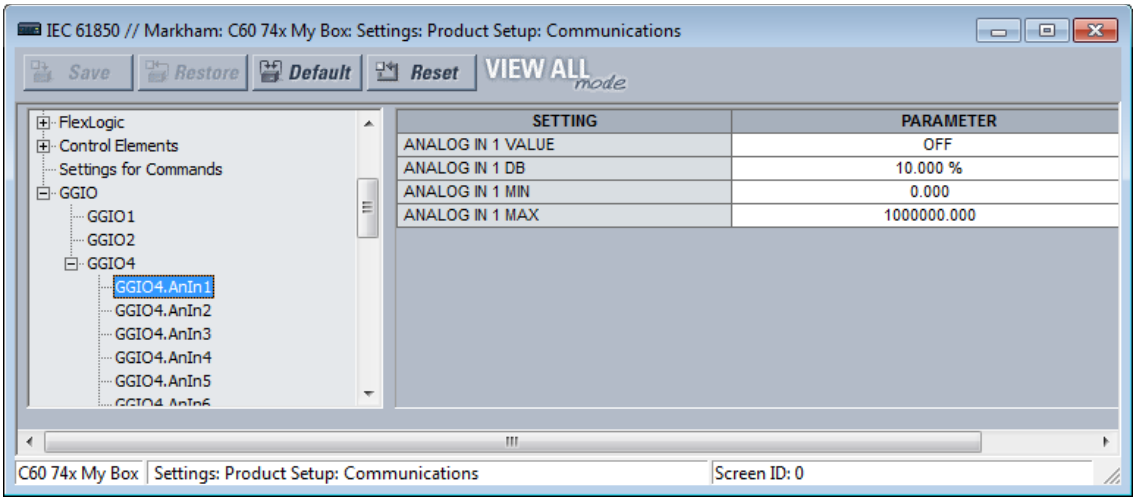

ANALOG IN 1 VALUE

Range: any FlexAnalog operand

Default: OFF

This setting selects the FlexAnalog operand whose value is mapped into the IEC 61850 data attribute <LDName>/GGIO4.AnIn01.instMag.f. The value of the FlexAnalog operand is converted automatically to the format and scaling required by the standard, that is to say primary amperes, primary volts, and so on. See Appendix A for a list of FlexAnalog operands.

ANALOG IN 1 DB

Range: 0.000 to 100.000% in steps of 0.001

Default: 0.000%

This setting specifies the deadband for the **ANALOG IN 1 VALUE**. The deadband is used to determine when to update the deadbanded magnitude from the instantaneous magnitude. The deadband is a percentage of the difference between the "max." and "min." values. Here, the "max." and "min." are as specified by the settings **ANALOG IN 1 MAX** and **ANALOG IN 1 MIN**.

See the Deadband Settings section earlier for a description of deadbanded values.

ANALOG IN 1 MIN

Range: -1000000000.000 to 1000000000.000 in steps of 0.001

Default: 0.000

This setting specifies the "min." value used in deadband calculations. The scaling of this setting is the same as used by <LDName>/GGIO4.AnIn01.instMag.f. This setting is stored as an IEEE 754 / IEC 60559 floating point number. Because of the large range of this setting, not all possible values can be stored. Some values are rounded to the closest possible floating point number.

ANALOG IN 1 MAX

Range: -1000000000.000 to 1000000000.000 in steps of 0.001

Default: 1000000.000

This setting specifies the "max." value used in deadband calculations. The scaling of this setting is the same as used by <LDName>/GGIO4.AnIn01.instMag.f. This setting is stored as an IEEE 754 / IEC 60559 floating point number. Because of the large range of this setting, not all possible values can be stored. Some values are rounded to the closest possible floating point number.

File transfer by IEC 61850

The C70 supports file transfer by IEC 61850. The approach is as follows, using the SISCO AX-S4 61850 client software as an example.

1. In the AX-S4 61850 Explorer window, click the **Tools** menu and access the SISCO File Transfer Utility.
2. Select the **Remote AR Name** from the drop-down list. Available files appear in the **File Specification** area on the right side of the window.
3. With the **Copy** option active, select a file to transfer and click the **Go** button. The file is copied and displays in the **Local** list on the left side of the window.
4. Repeat the process to transfer any other files.

Figure 5-48: File transfer by IEC 61850

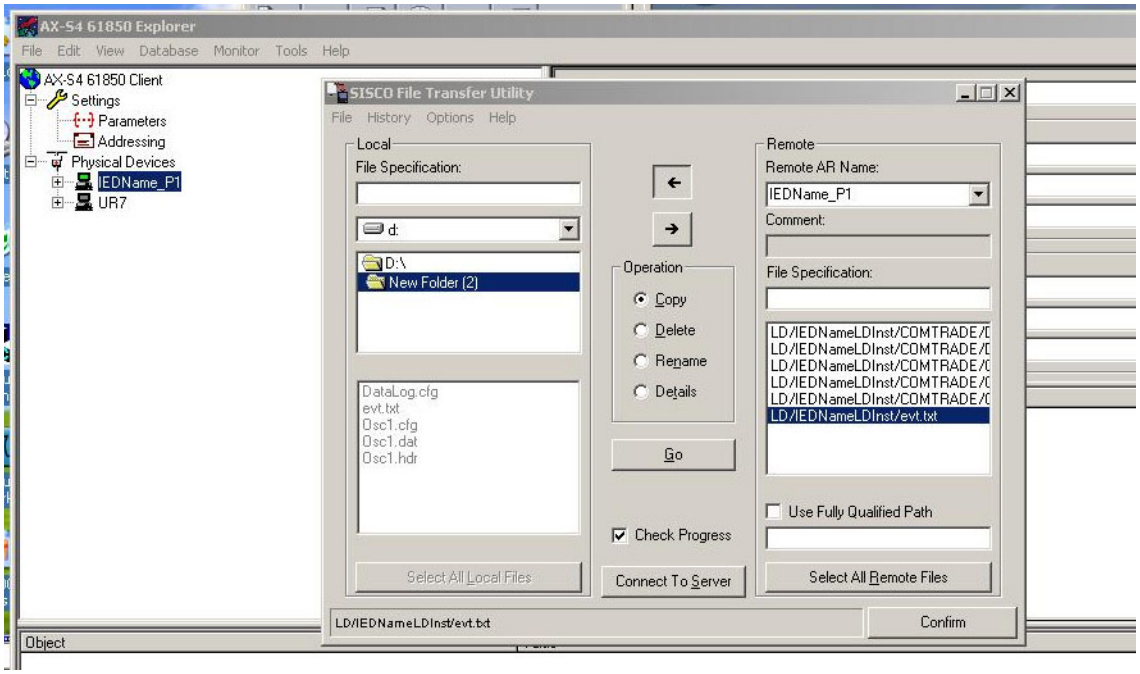

5.3.5.13 Web server HTTP protocol

SETTINGS ⇨ PRODUCT SETUP ⇨⇩ COMMUNICATIONS ⇨⇩ WEB SERVER HTTP PROTOCOL

■ **WEB SERVER** ■ **HTTP PROTOCOL**	⇔	**HTTP TCP PORT NUMBER(80): 80**	Range: 0 to 65535 in steps of 1

The C70 contains an embedded web server and can display pages in a web browser. The web pages are organized as a series of menus that can be accessed starting at the C70 "Main Menu." Web pages are read-only and are available showing DNP and IEC 60870-5-104 points lists, Modbus registers, event records, fault reports, and so on. First connect the C70 and a computer to an Ethernet network, then enter the IP address of the C70 Ethernet port in a web browser.

To close the port, set the port number to 0.

Any change takes effect when the C70 is restarted.

Figure 5-49: Example of UR web page showing event records

GE Multilin

C60 Breaker Relay
Revision 7.31

Relay Name: **Relay-1**
IP Address: **10.14.22.72**

UR

Event Recorder: Last 10 Events

Click Here For The Main Menu

Event Number	Time and Date	Event Cause
214	Nov 04 2014 14:02:56.062087	PROTOTYPE FIRMWARE
213	Nov 04 2014 14:02:56.062087	POWER ON
212	Nov 03 2014 14:00:20.364906	POWER OFF
211	Nov 03 2014 13:55:15.061866	PROTOTYPE FIRMWARE
210	Nov 03 2014 13:55:15.061866	POWER ON
209	Nov 03 2014 13:10:59.733179	POWER OFF
208	Nov 03 2014 13:06:11.062104	PROTOTYPE FIRMWARE
207	Nov 03 2014 13:06:11.062104	POWER ON
206	Oct 31 2014 10:07:25.078203	POWER OFF
205	Oct 31 2014 10:00:44.062027	PROTOTYPE FIRMWARE

NOTE

Do not set more than one protocol to the same TCP/UDP port number, as this results in unreliable operation of those protocols.

5

5.3.5.14 TFTP protocol

SETTINGS ⇨ PRODUCT SETUP ⇨⇩ COMMUNICATIONS ⇨⇩ TFTP PROTOCOL

■ TFTP PROTOCOL ■	⇔	TFTP MAIN UDP PORT NUMBER(69): 69	Range: 0 to 65535 in steps of 1
	⇩	TFTP DATA UDP PORT 1 NUMBER: 0	Range: 0 to 65535 in steps of 1
	⇩	TFTP DATA UDP PORT 2 NUMBER: 0	Range: 0 to 65535 in steps of 1

The Trivial File Transfer Protocol (TFTP) can be used to transfer files from the C70 over a network. The C70 operates as a TFTP server. TFTP client software is available from various sources, including Microsoft Windows NT. The dir.txt file obtained from the C70 contains a list and description of all available files, for example event records and oscillography.

The "put" function is not for security reasons. You can enter a "get" command but not a "put" command.

TFTP MAIN UDP PORT NUMBER — To close the port, set the port number to 0. Any change takes effect when the C70 is restarted.

NOTE

Do not set more than one protocol to the same TCP/UDP port number, as this results in unreliable operation of those protocols.

5.3.5.15 IEC 60870-5-104 protocol

SETTINGS ⇨ PRODUCT SETUP ⇨⇩ COMMUNICATIONS ⇨⇩ IEC 60870-5-104 PROTOCOL

■ IEC 60870-5-104 ■ PROTOCOL	⇔	IEC TCP PORT NUMBER(2404): 2404	Range: 0 to 65535 in steps of 1
	⇩	■ IEC NETWORK ■ CLIENT ADDRESSES	See below

⇳	**IEC COMMON ADDRESS OF ASDU: 0**	Range: 0 to 65535 in steps of 1
⇳	**IEC CYCLIC DATA PERIOD: 60 s**	Range: 1 to 65535 s in steps of 1
⇳	**IEC CURRENT DEFAULT THRESHOLD: 30000**	Range: 0 to 65535 in steps of 1
⇳	**IEC VOLTAGE DEFAULT THRESHOLD: 30000**	Range: 0 to 65535 in steps of 1
⇳	**IEC POWER DEFAULT THRESHOLD: 30000**	Range: 0 to 65535 in steps of 1
⇳	**IEC ENERGY DEFAULT THRESHOLD: 30000**	Range: 0 to 65535 in steps of 1
⇳	**IEC PF DEFAULT THRESHOLD: 1.00**	Range: 0.00 to 1.00
⇳	**IEC OTHER DEFAULT THRESHOLD: 30000**	Range: 0 to 65535 in steps of 1
⇳	**IEC REDUNDANCY ENABLED: No**	Range: No, Yes
⇧	**IEC EVENT TIME BASE: LOCAL**	Range: Local, UTC

IEC 60870-5-104 is a transmission protocol for network access, specifically for communication between a control station and substation over a TCP/IP network.

The C70 supports the IEC 60870-5-104 protocol. This protocol is enabled when the **SETTINGS ⇨ PRODUCT SETUP ⇨⇩ COMMUNICATIONS ⇨ PROTOCOL** setting is set to IEC 60870-5-104. The C70 can be used as an IEC 60870-5-104 slave device connected to a maximum of two masters (usually either an RTU or a SCADA master station). Since the C70 maintains two sets of IEC 60870-5-104 data change buffers, ideally no more than two masters actively communicate with the C70 at one time.

The **IEC ------- DEFAULT THRESHOLD** settings are used to determine when to trigger spontaneous responses containing M_ME_NC_1 analog data. These settings group the C70 analog data into types: current, voltage, power, energy, and other. Each setting represents the default threshold value for all M_ME_NC_1 analog points of that type. For example, to trigger spontaneous responses from the C70 when any current values change by 15 A, the **IEC CURRENT DEFAULT THRESHOLD** setting is set to 15. Note that these settings are the default values of the deadbands. P_ME_NC_1 (parameter of measured value, short floating point value) points can be used to change threshold values, from the default, for each individual M_ME_NC_1 analog point. Whenever power is removed and re-applied to the C70, the default thresholds are in effect.

The **IEC REDUNDANCY** setting decides whether multiple client connections are accepted or not. If redundancy is set to Yes, two simultaneous connections can be active at any given time.

IEC TCP PORT NUMBER — To close the port, set the port number to 0. Any change takes effect when the C70 is restarted.

IEC COMMON ADDRESS OF ASDU — The change takes effect when the C70 is restarted.

IEC CYCLIC DATA PERIOD — The change takes effect when the C70 is restarted.

NOTE

The C70 relay does not support energy metering. As such, the **IEC ENERGY DEFAULT THRESHOLD** setting is not applicable.

NOTE

Do not set more than one protocol to the same TCP/UDP port number, as this results in unreliable operation of those protocols.

SETTINGS ⇨ PRODUCT SETUP ⇨⇩ COMMUNICATIONS ⇨⇩ IEC 60870-5-104 PROTOCOL ⇨⇩ IEC NETWORK CLIENT ADDRESSES

■ IEC NETWORK ■ CLIENT ADDRESSES	⇔	CLIENT ADDRESS 1: 0.0.0.0	Range: standard IPV4 address format
		⇩	
	⇧	CLIENT ADDRESS 5: 0.0.0.0	Range: standard IPV4 address format

The C70 can specify a maximum of five clients for its IEC 104 connections. These are IP addresses for the controllers to which the C70 can connect. A maximum of two simultaneous connections are supported at any given time.

5.3.5.16 IEC 60870-5-103 protocol

SETTINGS ⇨ PRODUCT SETUP ⇨⇩ COMMUNICATIONS ⇨⇩ IEC 60870-5-103

■ IEC103 ■ PROTOCOL	⇔	IEC103 COMMON ADDRESS OF ASDU: 0	Range: 0 to 254 in steps of 1
	⇩	IEC103 SYNC TIMEOUT: 1	Range: 1 to 1440 min in steps of 1
	⇩	■ IEC103 INPUTS ■ BINARY	See below
	⇩	■ IEC103 INPUTS ■ MEASURANDS	See below
	⇧	■ IEC103 COMMANDS ■	See below

5

SOFTWARE OPTION

The C70 is provided with optional IEC 60870-5-103 communications capability, specified as a software option at the time of ordering.

IEC 60870-5-103 is a companion standard to the IEC 60870-5 suite of standards for transmission protocols. It defines messages and procedures for interoperability between protection equipment and devices of a control system in a substation for communicating on a serial line.

The IEC 60870-5-103 protocol is enabled when the **SETTINGS ⇨ PRODUCT SETUP ⇨⇩ COMMUNICATIONS ⇨ PROTOCOL** setting is set to IEC 60870-5-103.

The IEC 60870-5-103 is an unbalanced (master-slave) protocol for coded-bit serial communication, exchanging information with a control system. In the context of this protocol, the protection equipment is the slave and the control system is the master. The communication is based on a point-to-point principle. The master must be able to interpret the IEC 60870-5-103 communication messages.

The UR implementation of IEC 60870-5-103 consists of the following functions:

- Report binary inputs
- Report analog values (measurands)
- Commands
- Time synchronization

The RS485 port supports IEC 60870-5-103.

The UR Family Communications Guide contains more information on the protocol.

IEC103 COMMON ADDRESS OF ASDU — This setting uniquely defines this C70 on the serial line. Select an ID between 0 and 254. This ID does not need to be in sequential order for all stations that communicate with a controller, but it is recommended. Note that RS485 only allows a maximum of 32 slave stations on a communication line, so the entire range of 254 addresses is never exhausted.

IEC103 SYNC TIMEOUT — This setting defines the time that the C70 waits for a synchronization message. The C70 synchronizes its clock using all available sources, with the source synching more frequently overwriting the time of the other sources. Since the synchronization message received from the IEC 60870-5-103 master is less frequent than IRIG-B, PTP, or SNTP, its time is overwritten by these three sources, if any of them is active. If the synchronization timeout occurs and none of IRIG-B, PTP, or SNTP is active, the C70 sets the invalid bit in the time stamp of a time-tagged message.

The settings for the remaining menus are outlined as follows.

SETTINGS ⇨ PRODUCT SETUP ⇨⇩ COMMUNICATIONS ⇨⇩ IEC 60870-5-103 ⇨⇩ IEC103 INPUTS BINARY

■ IEC103 INPUTS ■ BINARY	⇔	■ POINT 0 ■	See below
	⇩	■ POINT 1 ■	See below
	⇩		
	⇧	■ POINT 95 ■	See below

■ POINT 0 ■	⇔	POINT 0 FUN 0	Range: 0 to 255 in steps of 1
	⇩	POINT 0 INF 0	Range: 0 to 255 in steps of 1
	⇧	POINT 0 Input Off	Range: FlexLogic operand
	⇩		
■ POINT 95 ■	⇔	POINT 95 FUN 0	Range: 0 to 255 in steps of 1
	⇩	POINT 95 INF 0	Range: 0 to 255 in steps of 1
	⇧	POINT 95 Input Off	Range: FlexLogic operand

The binary input points are mapped using elements from a list of possible FlexLogic operands. A maximum of 96 binary inputs (points) can be mapped this way.

The IEC 60870-5-103 point list always starts with point 0 and ends at the first "Off" value. Since the IEC 60870-5-103 point list must be in a continuous block, any points assigned after the first "Off" point are ignored.

For each defined point, set appropriate values for the Function Type (FUN) and Information Number (INF), which form the Information Object Identifier field of the ASDU, as defined in IEC 60870-5-103.

The binary input points are sent as Class 1 data. They are sent either as a response to a general interrogation received from the controller or reported spontaneously. Spontaneous transmission occurs as a response to cyclic Class 2 requests. If the C70 wants to transmit Class 1 data at that time, it demands access for Class 1 data transmission (ACD=1 in the control field of the response).

For any change to take effect, restart the relay.

SETTINGS ⇨ PRODUCT SETUP ⇨⇩ COMMUNICATIONS ⇨⇩ IEC 60870-5-103 ⇨⇩ IEC103 INPUTS MEASURANDS

■ IEC103 INPUTS ■ MEASURANDS	⇔	■ ASDU 1 ■	See below
	⇩		
	⇧	■ ASDU 4 ■	

■ ASDU 1 ■	⇔	ASDU 1 TYP: 9	Range: 3 or 9
	⇕	ASDU 1 FUN: 0	Range: 0 to 255 in steps of 1
	⇕	ASDU 1 INF: 0	Range: 0 to 255 in steps of 1
	⇕	ASDU 1 SCAN TOUT: 0	Range: 0 to 1000 s in steps of 1
	⇕	ASDU 1 ANALOG 1 Off	Range: FlexAnalog parameter
	⇕	ASDU 1 ANALOG 1 FACTOR: 1.000	Range: 0.000 to 65.535 in steps of 0.001
	⇕	ASDU 1 ANALOG 1 OFFSET: 0	Range: -32768 to 32767 in steps of 1
		⇩	
	⇕	ASDU 1 ANALOG 9 Off	Range: FlexAnalog parameter
	⇕	ASDU 1 ANALOG 9 FACTOR: 1.000	Range: 0.000 to 65.535 in steps of 0.001
	⇕	ASDU 1 ANALOG 9 OFFSET: 0	Range: -32768 to 32767 in steps of 1
		⇩	
■ ASDU 4 ■	⇕	ASDU 4 TYP: 9	Range: 3 or 9
	⇕	ASDU 4 FUN: 0	Range: 0 to 255 in steps of 1
	⇕	ASDU 4 INF: 0	Range: 0 to 255 in steps of 1
	⇕	ASDU 4 SCAN TOUT: 0	Range: 0 to 1000 s in steps of 1
	⇕	ASDU 4 ANALOG 1 Off	Range: FlexAnalog parameter
	⇕	ASDU 4 ANALOG 1 FACTOR: 1.000	Range: 0.000 to 65.535 in steps of 0.001
	⇕	ASDU 4 ANALOG 1 OFFSET: 0	Range: -32768 to 32767 in steps of 1
		⇩	
	⇕	ASDU 4 ANALOG 9 Off	Range: FlexAnalog parameter
	⇕	ASDU 4 ANALOG 9 FACTOR: 1.000	Range: 0.000 to 65.535 in steps of 0.001
	⇧	ASDU 4 ANALOG 9 OFFSET: 0	Range: -32768 to 32767 in steps of 1

The configuration menu allows a maximum of four ASDUs containing measurands.

Measurands are sent as a response to Class 2 requests, which are cyclic requests coming from the master.

TYPE IDENTIFICATION (TYP) — The configuration field TYP indicates how many measurands are present in the corresponding ASDU. Each ASDU can take either 4 or 9 measurands maximum, depending on the type identification (3 respectively 9). For any change to take effect, restart the relay.

FUNCTION TYPE (FUN) and **INFORMATION NUMBER (INF)** — These two fields form the Information Object Identifier of the ASDU as defined in IEC 60870-103. For any change to take effect, restart the relay.

SCAN TIMEOUT (SCAN TOUT) — This is the cyclic period used by the C70 to decide when a measurand ASDU is included in a response. The measurand is sent as response to a Class 2 request when the corresponding timeout expires. The default value 0 means 500 ms.

ANALOG # — This field contains the actual measurand to be sent in the response to the master. The measurands can be mapped using elements from a list of FlexAnalog operands. The measurands sent are voltage, current, power, power factor, and frequency. If any other FlexAnalog is chosen, the C70 sends 0 instead of its value. Note that the power is transmitted in KW, not W. Measurands are transmitted as ASDU 3 or ASDU 9 (type identification value set to measurands I, respectively measurands II).

Each IEC 60870-5-103 measurands list ends at the first unconfigured ("Off") value. Any measurand assigned after the first "Off" value is ignored.

At least one measurand per ASDU must be configured in order to configure the following ASDU. For example, the user can configure only one measurand for each ASDU, but the user is not allowed to skip ASDU 2 and configure measurands in ASDU 3.

For any change to take effect, restart the relay.

ANALOG # FACTOR and **OFFSET** — For each measurand included in the ASDU, a factor and offset also can be configured. The factor and offset allow for scaling to be performed on measurands. The final measurement sent to the IEC 60870-103 master is then "a*x + b," where x is the measurand, a is the multiplying factor and b is the offset. The master has to perform the reversed operation in order to retrieve the actual value if such scaling is done. By default a = 1 and b = 0, so no scaling is done if these values are left at their defaults. Examples of when scaling is appropriate are as follows:

- If the measured value contains decimals and it is important to preserve the resolution. Since the format for transmitting the measurand does not permit decimals, a factor a>1 can be applied before transmission. For example, a frequency F=59.9Hz can be transmitted as Ft = 10 * F = 10 * 59.9 = 599. In this case a = 10, b = 0. The master receives 599 and has to divide by 10 to retrieve the real value 59.9.
- If the measured value is larger than what fits in the format defined in IEC 103. The format defined in the standard allows for signed integers up to 4095. By offsetting, unsigned integers up to 4096 + 4095 = 8191 are supported. Scaling using factors <1 can be required in such cases. The calculation is outlined in the IEC 60870-5-103 chapter of the UR Family Communications Guide. Two examples follow, where you decide factors a and b.

  Example 1: Nominal power Pn = 100 MW = 100000 KW (power is transmitted in KW)

  Since P can be both positive and negative:

  Transmitted power Pt = (4095/(Pn*2.4)) * P = (4095/(100000 * 2.4)) * P

  = 0.017 * P

  a = 0.017

  b = 0

  Pt = 0.017 * P

  For a max power 100000 KW * 2.4 = 240000 KW, we transmit

  Pt = 0.017 * 240000 = 4080

  A value above 240 MW is indicated by overflow.

  Example 2: Nominal voltage Vn = 500000 V

  Since RMS voltage V can be only positive:

  Transmitted voltage Vt = (8191/(Vn*2.4)) * V - 4096 =

  = (8191/(500000 * 2.4)) * V - 4096 = 0.0068 * V - 4096

  a = 0.0068

  Since the step is in increments of 0.001, we round it at:

a = 0.006

b = -4096

Vt = 0.006 * V - 4096

For max voltage 500000 V * 2.4 = 1200000 V, we transmit

Vt = 0.006 * 1200000 - 4096 = 7200 - 4096 = 3104

SETTINGS ⇨ PRODUCT SETUP ⇨⇩ COMMUNICATIONS ⇨⇩ IEC 60870-5-103 ⇨⇩ IEC103 COMMANDS

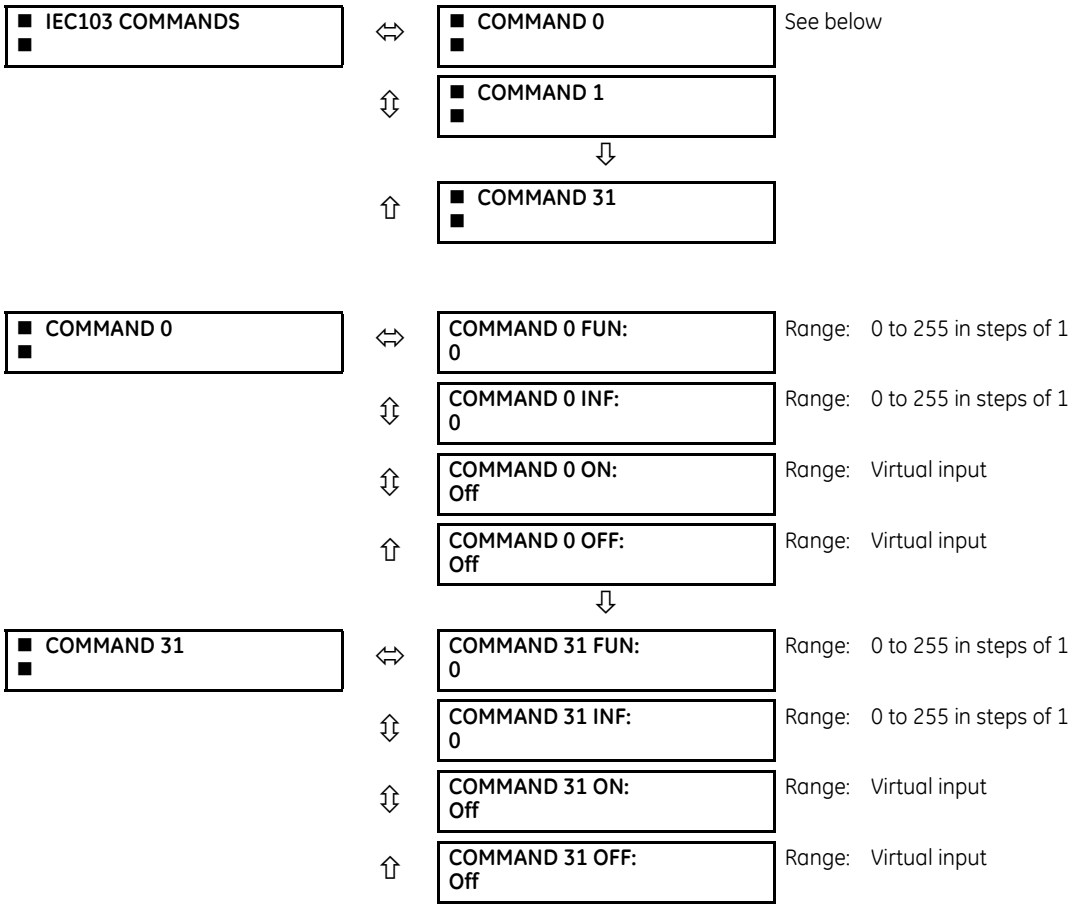

Commands are received as General Command (Type Identification 20). The user can configure the action to perform when an ASDU command comes.

A list of available mappings is provided on the C70. This includes 128 virtual inputs (see the following table). The ON and OFF for the same ASDU command can be mapped to different virtual inputs.

Each command is identified by the unique combination made by the function type (FUN) and information number (INF). If the master sends an ASDU command that does not have the FUN and INF of any configured command, the relay rejects it.

Table 5-12: Commands mapping table

Description	Value
Off	0
Virtual Input 1	1
Virtual Input 2	2
...	...
Virtual Input 128	128

For any change to take effect, restart the relay.

5.3.5.17 USB port

SETTINGS ⇨ PRODUCT SETUP ⇨⇩ COMMUNICATIONS ⇨⇩ USB 2.0

■ **USB 2.0** ■	⇔	**USB DEVICE PORT** **FUNCTION: Enabled**	Range: Disabled, Enabled

SOFTWARE OPTION

This setting applies to the USB port on the graphical front panel.

This setting enables/disables the USB port on the graphical front panel. When the port function is "Enabled," a standard USB serial cable allows a computer running the EnerVista UR Setup software to retrieve, display, and write settings either individually or collectively, to display status and actual values, to initiate controls, and to retrieve and display event records, oscillography records, data logger records, and disturbance records. Installation of the EnerVista software automatically installs the drivers required to use this USB port.

DNP is not available using the USB port on the graphical front panel.

5.3.6 Modbus user map

SETTINGS ⇨ PRODUCT SETUP ⇨⇩ MODBUS USER MAP

■ **MODBUS USER MAP** ■	⇔	**ADDR 1: 0** **VALUE: 0**	Range: 0 to 65535 in steps of 1
		⇩	
	⇧	**ADDR 256: 0** **VALUE: 0**	Range: 0 to 65535 in steps of 1

The Modbus user map provides read-only access for up to 256 registers. The memory map can be read from the front panel, the UR Family Communications Guide, or in a web browser. For the web browser, enter the IP address of the C70 and click a **Modbus Memory Map** option.

On the front panel, the address to read a specific Modbus register depends on whether the requested value is a setting or an actual value.

Up to firmware version 7.8x, the settings and actual values are in the same Modbus table. To obtain a memory map value, enter its address on the front panel.

Starting in firmware version 7.90, the settings have their own Modbus memory table and the actual values are in their own table. To obtain a memory map value, use the following sequence:

1. Obtain the hexadecimal Modbus address of the data item. It must have four digits, such as 024A.
2. Prefix the address by 3 for settings or by 4 for actual values.
3. Convert the resulting hexadecimal number to decimal.
4. Enter the resulting number in the first column of the Modbus user map. The corresponding value (if programmed) displays in second column (**VALUE**). A value of "0" in subsequent register lines automatically returns values of Modbus registers having the address of the previous line incremented by 1. These subsequent addresses are all in the same Modbus table (settings or actual values) as the address that was entered.

   An address value of "0" in the initial register means "none" and values of "0" display for all registers.

   Different address values can be entered as required in any of the register positions.

Here are two examples of how to add a setting or actual value to the front panel Modbus user map.

To add the setting "Phase TOC 1 Pickup" to the Modbus user map:

1. Find the address of the setting "Phase TOC 1 Pickup," which is 334Eh (334E in hexadecimal format).
2. Prefix this address by 3 to obtain 3334Eh.

3. Convert this value to decimal to obtain 209742 and enter it on the front panel.

To add the actual value "SRC 1 Frequency" to the Modbus user map:

1. Find the address of the actual value "SRC 1 Frequency," which is 1D80h.
2. Prefix this address by 4 to obtain 41D80h.
3. Convert this value to decimal to obtain 269696 and enter it on the front panel.

5.3.7 Real-time clock

5.3.7.1 Menu

SETTINGS ⇨ PRODUCT SETUP ⇨⇩ REAL TIME CLOCK

■ REAL TIME ■ CLOCK	⇔	SYNCRONIZING SOURCE: None	Range: None, PP/IRIG-B/PTP/Other, IRIG-B/PP/PTP/Other, PP/PTP/IRIG-B/Other, PBM Clock
	⇩	REAL TIME CLOCK EVENTS: Disabled	Range: Enabled, Disabled
	⇩	IRIG-B SIGNAL TYPE: None	Range: None, DC Shift, Amplitude Modulated
	⇩	■ PRECISION TIME ■ PROTOCOL (1588)	See below
	⇩	■ SNTP PROTOCOL ■	See below
	⇧	■ LOCAL TIME ■	See below

The relay contains a real time clock (RTC) to create time stamps for communications protocols as well as for historical data, such as event records and oscillography. When the relay restarts, the RTC initializes from an onboard battery-backed clock, which has the same accuracy as an electronic watch, approximately ±1 minute per month (~23 ppm). Once the RTC is synchronized with the Precision Time Protocol (PTP), IRIG-B, or SNTP, its accuracy approaches that of the synchronizing time delivered to the relay. While the RTC is not synchronized via PTP or IRIG-B, or the relay determines that it has an offset possibly greater than 10 µs from the international time standard, the CLOCK UNSYNCHRONIZED FlexLogic operand is activated.

The **SYNCHRONIZING SOURCE** setting displays in the software when the relay includes the IEEE 1588 software option. The setting configures the priority sequence of the time synchronization source, to determine which of the available external time sources to use for time synchronization. A setting of None causes the RTC and the synchrophasor clock to free-run, and the clock can be changed from the front panel or from communications protocols. A setting of PP/IRIG-B/PTP/Other, IRIG-B/PP/PTP/Other, or PP/PTP/IRIG-B/Other causes the relay to track the first source named that is enabled and operational, or free-run if none of these are available. Here, PP means a time source that is strictly compliant with PP, PTP means a time source that is not strictly compliant with PP, and Other means any less precise source (SNTP, IEC 103, IEC 104, Modbus, or DNP). When a time source fails or recovers, the relay automatically transfers synchronization as required by this setting.

The PBM Clock setting causes the relay to use the time source from any non-HardFiber Process Bus Module clock. If the Process Bus Module **PTP FUNCTION** setting is enabled and PTP grandmaster is available in the process bus network, the Process Bus Module clock is synchronized to the PTP grandmaster, else the Process Bus Module clock free-runs. A UR can use a synchronizing source either from the real-time clock (main CPU) or a Process Bus Module, as outlined in **Settings > Process Bus Module > PBM PTP**.

Note that a UR does not need to be time synchronized to accept the sampled values. All the elements (protection, control, monitoring, logic, and so on) in the UR (except Line Current Differential element) remain fully functional without requiring any external synchronizing source for the UR, as long as all the sampled values subscribed by the relay are synchronized according to the **Settings > Process Bus Module > General > SmpSynch Check** setting and pass the other acceptance criteria as defined in **Settings > Process Bus Module > SV Stream Config > Logic**.

NOTE

Some UR applications like oscillography, event recorder, and datalogger use the real-time clock for time-stamping.

When the relay does not have the IEEE 1588 software option and this setting does not display, it uses IRIG-B when enabled and operational, then failing that SNTP when configured and operational, and otherwise it free-runs unless the clock is changed from the front panel or from communications protocols.

Setup for IRIG-B is illustrated in the Installation chapter.

For the Other protocols, whenever a time synchronization message is received through any of the active protocols, the C70 clock updates. However, given that IEC 60870-5-103, IEC 60870-5-104, Modbus, and DNP are low-accuracy time synchronization methods, avoid their use for synchronization when better accuracy time protocols, such as IRIG-B and PTP, are active in the system. If IRIG-B or PTP is used to update the relay clock, the other protocols (such as SNTP) are not allowed to update, even if active.

See the **COMMANDS ⇨ SET DATE AND TIME** menu section of this manual to manually set the RTC.

The **REAL TIME CLOCK EVENTS** setting allows changes to the date and/or time to be captured in the event record. The event records the RTC time before the adjustment. A Date/Time Changed event is generated when:

- The real time clock changed from SNTP/PTP/IRIG-B and the time difference is more than one second
- The real time clock changed from the front panel or via Modbus register. The relay always generates this event regardless of the time difference.
- The Daylight Saving Time (DST) setting gets enabled and the current relay time is already in the DST zone
- The real time clock enters or leaves DST

To enable IRIG-B synchronization, the input **IRIG-B SIGNAL TYPE** must be set to DC Shift or Amplitude Modulated. IRIG-B synchronization can be disabled by making this setting None. When IRIG-B is enabled and active, clock synchronization by communication protocols. (DNP, IEC 60870-5-103, IEC 60870-5-104) is blocked, and clock synchronization from the front panel and over Modbus is always enabled.

Clocks can be synchronized locally among several relays using the computer time. When using a time source, such as IRIG-B, the time is overwritten eventually by the time source. To synchronize clocks among UR devices:

1. In the EnerVista software, expand the main menu in the Online Window area and select the **Synchronize Devices** entry. The window opens. The software prompts to acknowledge any offline devices.
2. Click the **Synchronize Devices** button at the top of the window, and confirm the action at the prompt. The devices assume the time of the computer being used.

To configure and enable PTP and/or SNTP, or to set local time parameters (for example time zone, daylight savings), use the following sections.

5.3.7.2 Precision time protocol (1588)

SETTINGS ⇨ PRODUCT SETUP ⇨⇩ REAL TIME CLOCK ⇨⇩ PRECISION TIME PROTOCOL (1588)

■ PRECISION TIME ■ PROTOCOL (1588)	⇔	STRICT POWER PROFILE: Disabled	Range: Enabled, Disabled
	⇩	PTP DOMAIN NUMBER: 0	Range: 0 to 255
	⇩	PTP VLAN PRIORITY: 4	Range: 0 to 7
	⇩	PTP VLAN ID: 0	Range: 0 to 4095
	⇩	■ PTP PORT 1 ■	See below
	⇩		
	⇧	■ PTP PORT 3 ■	

SETTINGS ⇨ PRODUCT SETUP ⇨⇩ REAL TIME CLOCK ⇨⇩ PRECISION TIME PROTOCOL (1588) ⇨⇩ PTP PORT 1(3)

■ **PTP PORT 1** ■	⇩	**PORT 1 PTP FUNCTION:** **Disabled**	Range: Enabled, Disabled
	⇩	**PORT 1 PATH DELAY** **ADDER: 0 ns**	Range: 0 to 60000 ns in steps of 1
	⇧	**PORT 1 PATH DELAY** **ASYMMETRY: 0 ns**	Range: –1000 to +1000 ns in steps of 1

SOFTWARE OPTION

The C70 is provided with optional Precision Time Protocol capability. This feature is specified as the IEEE 1588 software option at the time of ordering.

The C70 supports the Precision Time Protocol (PTP) specified in IEEE Std 1588 2008 using the Power Profile (PP) specified in IEEE Std C37.238 2017. This enables the relay to synchronize to the international time standard over an Ethernet network that implements PP.

The relay can be configured to operate on some PTP networks that are not strictly PP. Time accuracy can be less than specified for a PP network. Tolerated deviations from strict PP include 1) missing declaration of PP compliance in the messages, 2) connection to a network device that does not support the PTP peer delay mechanism, 3) jitter substantially greater than 1 µs in received event messages, and 4) certain non-compliant announce and sync message update rates.

The relay implements PTP according to IEEE Std 1588 2008 and the equivalent IEC 61588:2009(E), sometimes referred to as version 2 PTP. It does not support the previous version of the standard (version 1).

5

PTP is a protocol that allows multiple clocks in a network to synchronize with one another. It permits synchronization accuracies better than 1 ns, but this requires that each and every component in the network achieve very high levels of accuracy and a very high baud rate, faster than normally used for relay communications. When operating over a generic Ethernet network, time error can amount to 1 ms or more. PP is a profile of PTP which specifies a limited subset of PTP suitable for use in power system protection, control, automation, and data communication applications, and thereby facilitates interoperability between different vendor's clocks and switches. PP specifies a worst-case delivered time error of less than 1 µs over a 16-hop network.

In a PTP system and in a PP system, the clocks automatically organize themselves into a master-slave synchronization hierarchy with the "best" clock available making itself the "grandmaster" at the top of the hierarchy; all others make themselves "slaves" and track the grandmaster. Typically the grandmaster clock receives its time from GPS satellites or some other link to the international time standard. If the grandmaster fails, the next "best" clock available in the domain assumes the grandmaster role. When a clock on start-up discovers that it is "better" than the present grandmaster, it assumes the grandmaster role and the previous grandmaster reverts to slave. The C70 qualification mechanism accepts a potential master clock as a new grandmaster, when in a four-second interval it has received three announce messages from it, all better than the present grandmaster clock and better than any other announce in this interval.

Time messages issued by the grandmaster are delayed as they pass through the network both due to the finite speed of the signal in the interconnecting fiber or wire, and due to processing delays in the Ethernet switches. Each clock and switch implementing PP measures the propagation delay to each of its PP neighbors, and compensates for these delays in the time received. Each network device implementing PP measures the processing delay it introduces in each time message and compensates for this delay in the time it transmits. As a result, the time delivered to end-devices such as the UR are virtually identical to the grandmaster time. If one of the network devices in the hierarchy does not fully implement PP, the associated propagation delay and/or latency may not be compensated for, and the time received at the end-device can be in error by more than 100 µs.

See the preceding Real Time Clock section for a description of when time values received via PTP are used to update the relay's real time clock.

The following settings are available for configuring the relay for PTP. The PTP menu displays only when the option was purchased.

STRICT POWER PROFILE — Power profile (IEEE Std C37.238 2017) requires that the relay only select a power profile compliant clock as a grandmaster, that the delivered time have worst-case error of ±1 µs, and that the peer delay mechanism be implemented. With the strict power profile setting enabled, the relay only selects as master the clocks displaying the IEEE_C37_238 identification codes. It uses a port only when the peer delay mechanism is operational. With the strict power

profile setting disabled, the relay uses clocks without the power profile identification when no power profile clocks are present, and uses ports even if the peer delay mechanism is non-operational. This setting applies to all of the relay's PTP capable ports.

PTP DOMAIN NUMBER — Set this setting to the domain number of the grandmaster-capable clock(s) to be synchronized to. A network can support multiple time distribution domains, each distinguished with a unique domain number. More commonly, there is a single domain using the default domain number zero.

This setting applies to all of the relay's PTP capable ports.

PTP VLAN PRIORITY — This setting selects the value of the priority field in the 802.1Q VLAN tag in request messages issued by the relay's peer delay mechanism. In compliance with PP the default VLAN priority is 4, but it is recommended that it be set to 7 in accordance with PTP. Depending on the characteristics of the device to which the relay is linked directly, VLAN Priority can have no effect.

This setting applies to all of the relay's PTP capable ports.

PTP VLAN ID — This setting selects the value of the ID field in the 802.1Q VLAN tag in request messages issued by the relay's peer delay mechanism. It is provided in compliance with PP. As these messages have a destination address that indicates they are not to be bridged, their VLAN ID serves no function, and so can be left at its default value. Depending on the characteristics of the device to which the relay is linked directly, VLAN ID can have no effect. This setting applies to all of the relay's PTP capable ports.

PORT 1 ... 3 FUNCTION — While this port setting is selected to disabled, PTP is disabled on this port. The relay does not generate or listen to PTP messages on this port.

PORT 1 ... 3 PATH DELAY ADDER — The time delivered by PTP is advanced by the time value in this setting prior to the time being used to synchronize the relay's real time clock. This is to compensate to the extent practical for time delivery delays not compensated for in the network. In a fully compliant PP network, the peer delay and the processing delay mechanisms compensate for all the delays between the grandmaster and the relay. In such networks, make this setting zero.

In networks containing one or more switches and/or clocks that do not implement both of these mechanisms, not all delays are compensated, so the time of message arrival at the relay is later than the time indicated in the message. This setting can be used to approximately compensate for this delay. However, as the relay is not aware of network switching that dynamically changes the amount of uncompensated delay, there is no setting that always and completely corrects for uncompensated delay. A setting can be chosen that reduces the worst-case error to half of the range between minimum and maximum uncompensated delay, if these values are known.

PORT 1 ... 3 PATH DELAY ASSYMMETRY — This setting corresponds to "delayAsymmetry" in PTP, which is used by the peer delay mechanism to compensate for any difference in the propagation delay between the two directions of a link. Except in unusual cases, the two fibers are of essentially identical length and composition, so make this setting zero.

In unusual cases where the length of the link is different in different directions, set this setting to the number of nanoseconds the Ethernet propagation delay to the relay is longer than the mean of path propagation delays to and from the relay. For instance, if it is known say from the physical length of the fibers and the propagation speed in the fibers that the delay from the relay to the Ethernet switch it is connected to is 9000 ns and that the delay from the switch to the relay is 11000 ns, then the mean delay is 10000 ns, and the path delay asymmetry is 11000 - 10000 = +1000 ns.

5.3.7.3 SNTP protocol

SETTINGS ⇨ PRODUCT SETUP ⇨⇩ REAL TIME CLOCK ⇨⇩ SNTP PROTOCOL

■ SNTP PROTOCOL ■	⇔	SNTP FUNCTION: Disabled	Range: Enabled, Disabled
	⇩	SNTP SERVER1 IP ADDR: 127.0.0.1	Range: standard IP address format
	⇩	SNTP SERVER2 IP ADDR: 127.0.0.1	Range: standard IP address format
	⇩	SNTP SERVER1 UDP PORT: 123	Range: 0 to 65535 in steps of 1
	⇧	SNTP SERVER2 UDP PORT: 123	Range: 0 to 65535 in steps of 1

The C70 supports the Simple Network Time Protocol specified in RFC-2030. With SNTP, the C70 can obtain clock time over an Ethernet network. The C70 acts as an SNTP client to receive time values from redundant SNTP/NTP servers, usually a dedicated product using a GPS receiver to provide an accurate time. One or two SNTP servers can be used; use of both servers for redundancy is recommended but not required.

To use SNTP, enable the function and set **SNTP SERVER1 IP ADDR** and/or **SNTP SERVER2 IP ADDR** to the SNTP/NTP server IP addresses. The C70 attempts to obtain time values from the SNTP SERVER1 SNTP/NTP server. If SERVER1 is not available/ reachable, the C70 switches to the SNTP SERVER2 to get the time value and vice versa.

Since many time values are obtained and averaged, it generally takes three to four minutes until the C70 clock is closely synchronized with the SNTP/NTP server. It can take up to 20 minutes for the C70 to signal an SNTP self-test error if the server is offline, depending on the number and SNTP server modes. Broadcast mode timeout is 10 minutes and unicast timeout is 80 seconds (corresponds to three unicast request retries).

SNTP FUNCTION — Enables or disables the SNTP feature on the C70.

SNTP SERVER1 IP ADDR — The C70 uses the SERVER1 address to contact an SNTP/NTP server to obtain time values. When the **SNTP FUNCTION** setting is set to enabled or on startup if the setting is enabled, the C70 SNTP client requests SERVER1 for the time value. If the SERVER1 channel fails or is not reachable, the C70 switches to SERVER2 SNTP/NTP server.

If SERVER1 SNTP server is set to 127.0.0.1, the C70 considers the SERVER1 SNTP server to be unconfigured.

To use SERVER1 SNTP in broadcast mode, set the **SNTP SERVER1 IP ADDR** setting to "0.0.0.0" and **SNTP FUNCTION** to "Enabled." The C70 SNTP client then listens to SNTP messages sent to the "all ones" broadcast address for the subnet. The C70 waits up to 18 minutes (>1024 seconds) without receiving an SNTP broadcast message before switching to the alternate channel.

SNTP SERVER2 IP ADDR — The C70 uses this address to contact an SNTP/NTP server if SERVER1 channel fails or is not reachable. If SERVER2 SNTP server is set to 127.0.0.1, the C70 considers the SERVER2 SNTP server to be unconfigured.

To use SERVER2 SNTP in broadcast mode, set the **SNTP SERVER2 IP ADDR** setting to "0.0.0.0" and **SNTP FUNCTION** to "Enabled." The C70 SNTP client then listens to SNTP messages sent to the "all ones" broadcast address for the subnet. The C70 waits up to 18 minutes (>1024 seconds) without receiving an SNTP broadcast message before switching to the alternate channel.

SNTP SERVER1 UDP PORT — This setting is 123 for normal SNTP operation. If SERVER1 SNTP is not required, close the port by changing this setting to zero.

SNTP SERVER2 UDP PORT — This setting is 123 for normal SNTP operation. If SERVER2 SNTP is not required, close the port by changing this setting to zero.

NOTE

Do not set more than one protocol to the same TCP/UDP port number, as this results in unreliable operation of those protocols.

If **SERVER1 IP ADDR** and **UDP PORT** settings match the **SERVER2 IP ADDR** and **UDP PORT** settings, the C70 considers only the SERVER1 SNTP server as being configured and an SNTP Failure error message generates. The failure message also displays when both servers are unavailable.

5.3.7.4 Local time

SETTINGS ⇨ PRODUCT SETUP ⇨⇩ REAL TIME CLOCK ⇨⇩ LOCAL TIME

■ LOCAL TIME ■	⇔	LOCAL TIME OFFSET FROM UTC: 0.0 hr	Range: –24.0 to 24.0 hr in steps of 0.5
	⇩	DAYLIGHT SAVINGS TIME: Disabled	Range: Disabled, Enabled
	⇩	DST START MONTH: January	Range: January to December (all months)
	⇩	DST START DAY: Sunday	Range: Sunday to Saturday (all days of the week)
	⇩	DST START DAY INSTANCE: First	Range: First, Second, Third, Fourth, Last

⇕	**DST START HOUR: 2:00**	Range: 0:00 to 23:00 in steps of one hour
⇕	**DST STOP MONTH: January**	Range: January to December (all months)
⇕	**DST STOP DAY: Sunday**	Range: Sunday to Saturday (all days of the week)
⇕	**DST STOP DAY INSTANCE: First**	Range: First, Second, Third, Fourth, Last
⇧	**DST STOP HOUR: 2:00**	Range: 0:00 to 23:00 in steps of one hour

The C70 maintains two times: local time and Universal Coordinated Time (UTC). Local time can be provided by IRIG-B signals. UTC time is provided by SNTP servers.

The real-time clock (RTC) and time stamps reported in historical records and communication protocols can be incorrect if the Local Time settings are not configured properly.

See the IRIG-B section in the Installation chapter for guidance on these settings when using an IRIG-B source that sets the IRIG-B control bits according to IEEE Std 1344-1995.

LOCAL TIME OFFSET FROM UTC — Used to specify the local time zone offset from UTC (Greenwich Mean Time) in hours. Time zones in the eastern hemisphere have positive values; time zones in the western hemisphere have negative values. A value of zero causes the relay to use UTC for local time. This setting has two uses. When the system RTC is synchronized with a communications protocol providing only local time or it is free-running, the offset setting is used to calculate UTC from the local time these provide. When the RTC is synchronized with a communications protocol providing only UTC (such as PTP or SNTP), the time offset setting is used to determine local time from the UTC provided. PTP ALTERNATE_TIME_OFFSET_INDICATOR TLVs are not used to calculate local time.

DAYLIGHT SAVINGS TIME and **DST** — Can be used to allow the relay to follow the DST rules of the local time zone. Note that when IRIG-B time synchronization is active, the local time in the IRIG-B signal contains any daylight savings time offset and so the DST settings are ignored. Note that the following items do not include the DST: Time of Day Timer Start Time; Time of Day Timer Stop Time; Event Recorder Last Cleared Date; Source x Demand VAR Maximum Date; Source x Demand WATT Maximum Date; Source x Demand VA Maximum Date; Source x Demand Ia Maximum Date; Source x Demand Ib Maximum Date; Source x Demand Ic Maximum Date; PMU x Last Cleared Date; PMU One-Shot Time; Data Logger Newest Time; Data Logger Oldest Time; Oscillography Last Cleared Date; Last Settings Change Date; User Programmable Fault Report Cleared Date; Digital Counter x Frozen Time Stamp; HIZ RMS Capture x Time; and HIZ Capture x Time.

5.3.8 User-programmable fault report

SETTINGS ⇨ PRODUCT SETUP ⇨⇩ USER-PROGRAMMABLE FAULT REPORTS ⇨⇩ USER-PROGRAMMABLE FAULT REPORT 1(2)

■ **USER-PROGRAMMABLE** ■ **FAULT REPORT 1**	⇔	**FAULT REPORT 1 FUNCTION: Disabled**	Range: Disabled, Enabled
	⇕	**PRE-FAULT 1 TRIGGER: Off**	Range: FlexLogic operand
	⇕	**FAULT 1 TRIGGER: Off**	Range: FlexLogic operand
	⇕	**FAULT REPORT 1 # 1: Off**	Range: Off, any actual value analog parameter
		⇩	
	⇧	**FAULT REPORT 1 #32: Off**	Range: Off, any actual value analog parameter

When enabled, this function monitors the pre-fault trigger. The pre-fault data are stored in the memory for prospective creation of the fault report on the rising edge of the pre-fault trigger. The element waits for the fault trigger as long as the pre-fault trigger is asserted, but not shorter than 1 second. When the fault trigger occurs, the fault data is stored and the complete report is created. If the fault trigger does not occur within 1 second after the pre-fault trigger drops out, the element resets and no record is created.

The user programmable record contains the following information: the user-programmed relay name, detailed firmware revision (x.xx, for example) and relay model (C70), the date and time of trigger, the name of pre-fault trigger (a specific FlexLogic operand), the name of fault trigger (a specific FlexLogic operand), the active setting group at pre-fault trigger, the active setting group at fault trigger, pre-fault values of all programmed analog channels (one cycle before pre-fault trigger), and fault values of all programmed analog channels (at the fault trigger).

Each fault report is stored as a file to a maximum capacity of ten files. An eleventh trigger overwrites the oldest file. The EnerVista software is required to view all captured data. A FAULT RPT TRIG event is automatically created when the report is triggered.

The relay includes two user-programmable fault reports to enable capture of two types of trips (for example, trip from thermal protection with the report configured to include temperatures, and short-circuit trip with the report configured to include voltages and currents). Both reports feed the same report file queue.

The last record is available as individual data items via communications protocols.

PRE-FAULT 1 TRIGGER — Specifies the FlexLogic operand to capture the pre-fault data. The rising edge of this operand stores one cycle-old data for subsequent reporting. The element waits for the fault trigger to actually create a record as long as the operand selected as **PRE-FAULT 1 TRIGGER** is "On." If the operand remains "Off" for 1 second, the element resets and no record is created.

FAULT 1 TRIGGER — Specifies the FlexLogic operand to capture the fault data. The rising edge of this operand stores the data as fault data and results in a new report. The trigger (not the pre-fault trigger) controls the date and time of the report.

FAULT REPORT 1 # 1 to **FAULT REPORT 1 #32** — These settings specify an actual value such as voltage or current magnitude, true RMS, phase angle, frequency, temperature, and so on, to be stored when the report is created. Up to 32 channels can be configured. Two reports are configurable to cope with variety of trip conditions and items of interest.

5.3.9 Oscillography

5.3.9.1 Menu

SETTINGS ⇨ PRODUCT SETUP ⇨⇩ OSCILLOGRAPHY

■ **OSCILLOGRAPHY** ■	⇔	**NUMBER OF RECORDS: 15**	Range: 3 to 64 in steps of 1
	⇩	**TRIGGER MODE: Automatic Overwrite**	Range: Automatic Overwrite, Protected
	⇩	**TRIGGER POSITION: 50%**	Range: 0 to 100% in steps of 1
	⇩	**TRIGGER SOURCE: Off**	Range: FlexLogic operand
	⇩	**AC INPUT WAVEFORMS: 64 samples/cycle**	Range: Off, 8, 16, 32, 64 samples/cycle
	⇩	■ **DIGITAL CHANNELS** ■	See below
	⇧	■ **ANALOG CHANNELS** ■	See below

Oscillography records contain waveforms captured at the sampling rate as well as other relay data at the point of trigger. Oscillography records are triggered by a programmable FlexLogic operand. Multiple oscillography records can be captured simultaneously.

To retrieve an Oscillography record from a relay:

1. If not yet set up for oscillography, configure settings under **Settings > Product Setup > Oscillography** in the EnerVista software.
2. Access **Actual Values > Records > Oscillography** in the EnerVista software.
3. In the window that opens, select the record number. The highest number is the most recent record (Newest Record Number).
4. Click the **Read** button to get the waveform. When available, waveforms are displayed graphically, and otherwise error messages display.
5. In the waveform window that opens, you can save the file, for example with the CFG extension.

The **NUMBER OF RECORDS** is selectable, but the number of cycles captured in a single record varies considerably based on other factors, such as sample rate and the number of operational modules. There is a fixed amount of data storage for oscillography; the more data captured, the less the number of cycles captured per record. See the **ACTUAL VALUES ⇨⇩ RECORDS ⇨⇩ OSCILLOGRAPHY** menu to view the number of cycles captured per record. The following table provides sample configurations with corresponding cycles/record. The minimum number of oscillographic records is three.

Table 5-13: Oscillography cycles/record example

Records	CT/VTs	Sample rate	Digital channels	Analog channels	Cycles per record
3	1	32	32	16	2399
3	1	64	32	16	1450
16	1	32	32	16	666
16	1	64	32	16	402
32	1	32	32	16	352
32	1	64	32	16	213
3	2	32	32	16	1516
3	2	64	32	16	851
16	2	32	32	16	421

TRIGGER MODE — A new record automatically overwrites an older record when **TRIGGER MODE** is set to "Automatic Overwrite."

TRIGGER POSITION — Set this to a percentage of the total buffer size (for example, 10%, 50%, 75%, and so on). A trigger position of 25% consists of 25% pre- and 75% post-trigger data.

TRIGGER SOURCE — Always captured in oscillography and can be any FlexLogic parameter (element state, contact input, virtual output, and so on). The relay sampling rate is 64 samples per cycle.

AC INPUT WAVEFORMS — Determines the sampling rate at which AC input signals (that is, current and voltage) are stored. Reducing the sampling rate allows longer records to be stored. This setting has no effect on the internal sampling rate of the relay, which is always 64 samples per cycle. That is, it has no effect on the fundamental calculations of the device.

NOTE

When changes are made to the oscillography settings, all existing oscillography records are cleared.

5.3.9.2 Digital channels

SETTINGS ⇨ PRODUCT SETUP ⇨⇩ OSCILLOGRAPHY ⇨⇩ DIGITAL CHANNELS

```
■ DIGITAL CHANNELS        ⇔   DIGITAL CHANNEL  1      Range:  FlexLogic operand
■                             Off
                                   ⇩
                          ⇧   DIGITAL CHANNEL 127     Range:  FlexLogic operand
                              Off
```

DIGITAL 1(127) CHANNEL — This setting selects the FlexLogic operand state recorded in an oscillography trace. The length of each oscillography trace depends in part on the number of parameters selected here. Parameters set to "Off" are ignored. There are 127 channels and one trigger, for a total of 128.

To populate quickly the rows in the Offline Window, use Ctrl C/V to copy/paste, or click then double-click a row to display a quick selection window.

Figure 5-50: Quick selection window

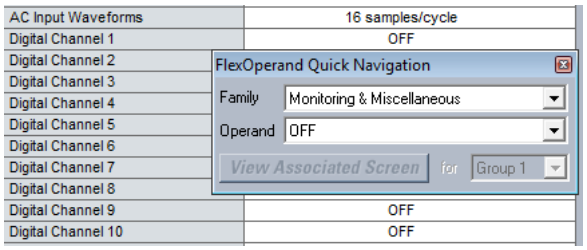

5.3.9.3 Analog channels

SETTINGS ⇨ PRODUCT SETUP ⇨⇩ OSCILLOGRAPHY ⇨⇩ ANALOG CHANNELS

■ **ANALOG CHANNELS** ■	⇔	**ANALOG CHANNEL 1:** **Off**	Range: Off, any FlexAnalog/actual value parameter See Appendix A for list
		⇩	
	⇧	**ANALOG CHANNEL 32:** **Off**	Range: Off, any FlexAnalog/actual value parameter See Appendix A for list

5

These settings select the metering actual value recorded in an oscillography trace. The length of each oscillography trace depends in part on the number of parameters selected here. Parameters set to "Off" are ignored. The parameters available in a given relay depend on

- the type of relay,
- the type and number of CT/VT hardware modules installed, and
- the type and number of analog input hardware modules installed

A list of all possible analog metering actual value parameters is presented in Appendix A: FlexAnalog Parameters.

All eight CT/VT module channels are stored in the oscillography file. The CT/VT module channels are named as follows:

<slot_letter><terminal_number>—<I or V><phase A, B, or C, or 4th input>

The fourth current input in a bank is called IG, and the fourth voltage input in a bank is called VX. For example, F2-IB designates the IB signal on terminal 2 of the CT/VT module in slot F.

If there are no CT/VT modules and analog input modules, no analog traces appear in the file; only the digital traces appear.

The source harmonic indices appear as oscillography analog channels numbered from 0 to 23. These correspond directly to the to the 2nd to 25th harmonics in the relay as follows:

Analog channel 0 ↔ 2nd harmonic
Analog channel 1 ↔ 3rd harmonic
...
Analog channel 23 ↔ 25th harmonic

5.3.10 Data logger

SETTINGS ⇨⇩ PRODUCT SETUP ⇨⇩ DATA LOGGER

■ **DATA LOGGER** ■	⇔	**DATA LOGGER MODE:** **Continuous**	Range: Continuous, Trigger

⇕	**DATA LOGGER TRIGGER:** **Off**	Range: FlexLogic operand
⇕	**DATA LOGGER RATE:** **60000 msec**	Range: 15 to 3600000 ms in steps of 1
⇕	**DATA LOGGER CHNL 1:** **Off**	Range: Off, any FlexAnalog/actual value parameter See Appendix A for list
	⇩	
⇕	**DATA LOGGER CHNL 16:** **Off**	Range: Off, any FlexAnalog/actual value parameter See Appendix A for list
⇧	**DATA LOGGER CONFIG:** **0 CHNL x 0.0 DAYS**	Range: Not applicable - shows computed data only

The data logger samples and records up to 16 analog parameters at a user-defined sampling rate. This recorded data can be downloaded to EnerVista UR Setup and displayed with parameters on the vertical axis and time on the horizontal axis. All data is stored in non-volatile memory, so the information is retained when power to the relay is lost.

For a fixed sampling rate, the data logger can be configured with a few channels over a long period or a larger number of channels for a shorter period. The relay automatically partitions the available memory between the channels in use. The following table outlines examples of storage capacities for a system frequency of 60 Hz.

Table 5-14: Data logger storage capacity example

Sampling rate	Channels	Days	Storage capacity
15 ms	1	0.1	482 s
	8	0.1	60 s
	9	0.1	54 s
	16	0.1	30 s
1000 ms	1	0.3	32729 s
	8	0.1	4091 s
	9	0.1	3637 s
	16	0.1	2046 s
60000 ms	1	22.7	1963710 s
	8	2.8	245460 s
	9	2.5	218190 s
	16	1.4	127230 s
3600000 ms	1	1362.1	117822600 s
	8	170.2	14727600 s
	9	151.3	13091400 s

NOTE

Changing any setting affecting data logger operation clears data in the log.

DATA LOGGER MODE — This setting configures the mode in which the data logger operates. When set to "Continuous," the data logger actively records any configured channels at the rate as defined by the **DATA LOGGER RATE**. The data logger is idle in this mode when no channels are configured. When set to "Trigger," the data logger records any configured channels at the instance of the rising edge of the **DATA LOGGER TRIGGER** source FlexLogic operand. The data logger ignores all subsequent triggers and continues to record data until the active record is full. Once the data logger is full, a CLEAR DATA LOGGER command is required to clear the data logger record before a new record can be started. Performing the CLEAR DATA LOGGER command also stops the current record and resets the data logger to be ready for the next trigger.

DATA LOGGER TRIGGER — This setting selects the signal used to trigger the start of a new data logger record. Any FlexLogic operand can be used as the trigger source. This setting only applies when the mode is set to "Trigger."

DATA LOGGER RATE — This setting selects the time interval at which the actual value data is recorded.

DATA LOGGER CHNL 1(16) — This setting selects the metering actual value that is to be recorded in Channel 1(16) of the data log. The parameters available in a given relay are dependent on: the type of relay, the type and number of CT/VT hardware modules installed, and the type and number of Analog Input hardware modules installed. Upon startup, the relay automatically prepares the parameter list. A list of all possible analog metering actual value parameters is shown in Appendix A: FlexAnalog Parameters.

DATA LOGGER CONFIG — This display presents the total amount of time that the Data Logger can record the channels not selected to "Off" without overwriting old data.

5.3.11 User-programmable LEDs

5.3.11.1 Menu - Enhanced and basic front panels

SETTINGS ⇨ PRODUCT SETUP ⇨⇩ USER-PROGRAMMABLE LEDS

■ USER-PROGRAMMABLE ■ LEDS	⇔	■ LED TEST ■	See below
	⇧⇩	■ TRIP & ALARM LEDS ■	See page 5-125
	⇧⇩	■ USER-PROGRAMMABLE ■ LED 1	See page 5-125
		⇩	
	⇧	■ USER-PROGRAMMABLE ■ LED 48	

5.3.11.2 Menu - Graphical front panel

SETTINGS ⇨ PRODUCT SETUP ⇨⇩ USER-PROGRAMMABLE LEDS

■ USER-PROGRAMMABLE ■ LEDS	⇔	■ LED TEST ■	See below
	⇧⇩	■ TRIP & ALARM LEDS ■	See page 5-125
	⇧⇩	■ EVENT CAUSE LED 1 ■	See page 5-126
		⇩	
	⇧	■ EVENT CAUSE LED 9 ■	

The LEDs can be customized to illuminate when a selected FlexLogic operand is in the logic 1 state. The trip and alarm LEDs can also be customized in a similar manner. To ensure correct functionality of all LEDs, an LED test feature is also provided.

5.3.11.3 LED test

SETTINGS ⇨ PRODUCT SETUP ⇨⇩ USER-PROGRAMMABLE LEDS ⇨ LED TEST

■ LED TEST ■	⇔	LED TEST FUNCTION: Disabled	Range: Disabled, Enabled
	⇧	LED TEST CONTROL: Off	Range: FlexLogic operand

When enabled, the LED test can be initiated from any digital input or user-programmable condition, such as a user-programmable pushbutton. The control operand is configured under the **LED TEST CONTROL** setting. The test covers all LEDs, including the LEDs of the optional user-programmable pushbuttons.

For the enhanced and basic front panels, the test consists of the following three stages:

1. All 62 LEDs on the relay are illuminated. This is a quick test to verify if any of the LEDs is “burned.” This stage lasts as long as the control input is on, up to a maximum of one minute. After one minute, the test ends.
2. All the LEDs are turned off, and then one LED at a time turns on for one second, then back off. The test routine starts at the top left panel, moving from the top to bottom of each LED column. This test checks for hardware failures that lead to more than one LED being turned on from a single logic point. This stage can be interrupted at any time.
3. All the LEDs are turned on. One LED at a time turns off for one second, then back on. The test routine starts at the top left panel moving from top to bottom of each column of the LEDs. This test checks for hardware failures that lead to more than one LED being turned off from a single logic point. This stage can be interrupted at any time.

For the graphical front panel, the test consists of the following stages:

1. All 22 LEDs on the relay are illuminated. This is a quick test to verify if any of the LEDs is "burned." This stage lasts as long as the control input is on, up to a maximum of one minute. After one minute, the test ends.
2. All the LEDs are turned off, and then one LED at a time turns on with the orange color for one second, then back off. The test routine starts at the top left panel, moving from the top to bottom for all 14 LEDs. Then the eight pushbutton LEDs are tested in the same manner. This test checks for hardware failures that lead to more than one LED being turned on from a single logic point. This stage can be interrupted at any time.
3. All the LEDs are turned on with the orange color. One LED at a time turns off for one second, then back on. The test routine starts at the top left panel moving from top to bottom for all 14 LEDs. Then the eight pushbutton LEDs are tested in the same manner. This test checks for hardware failures that lead to more than one LED being turned off from a single logic point. This stage can be interrupted at any time.
4. Additionally, stages 2 and 3 are repeated twice for the five device status LEDs and nine event cause LEDs, one time with green color on and the other with red color on.

When testing is in progress, the LEDs are controlled by the test sequence, rather than the protection, control, and monitoring features. However, the LED control mechanism accepts all the changes to LED states generated by the relay and stores the actual LED states (on or off) in memory. When the test completes, the LEDs reflect the actual state resulting from relay response during testing. The reset pushbutton does not clear any targets when the LED Test is in progress.

A dedicated FlexLogic operand, LED TEST IN PROGRESS, is set for the duration of the test. When the test sequence is initiated, the LED TEST INITIATED event is stored in the event recorder.

The entire test procedure is user-controlled. In particular, stage 1 can last as long as necessary, and stages 2 and 3 can be interrupted. The test responds to the position and rising edges of the control input defined by the **LED TEST CONTROL** setting. The control pulses must last at least 250 ms to take effect. The following diagram explains how the test is executed.

Figure 5-51: LED test sequence

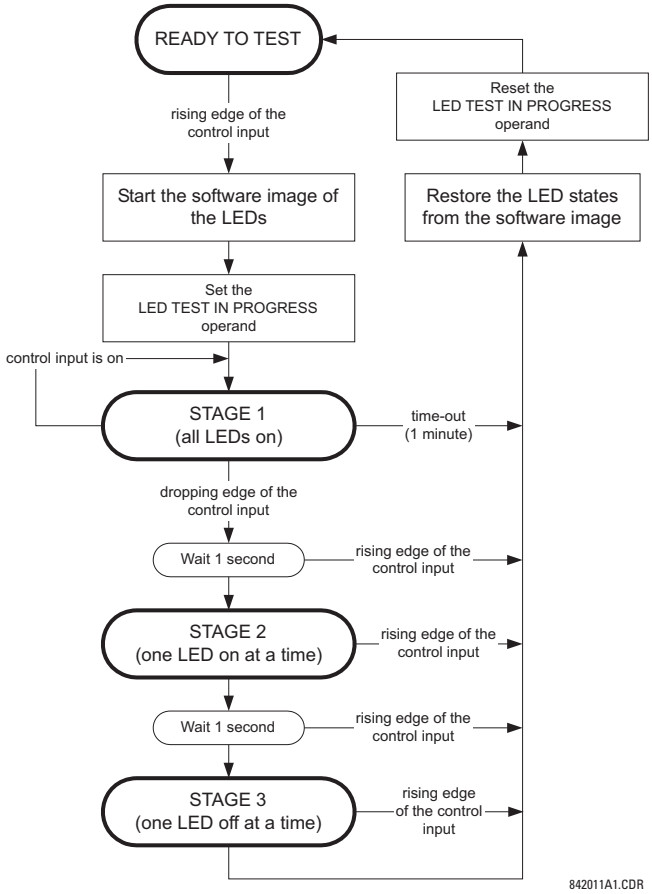

Application example 1

Assume one needs to check if any of the LEDs is "burned" through user-programmable pushbutton 1. Apply the following settings.

Configure user-programmable pushbutton 1 by making the following entries in the **SETTINGS ⇨ PRODUCT SETUP ⇨⇩ USER-PROGRAMMABLE PUSHBUTTONS ⇨ USER PUSHBUTTON 1** menu. (The option does not display when not purchased.)

PUSHBUTTON 1 FUNCTION: "Self-reset"
PUSHBTN 1 DROP-OUT TIME: "0.10 s"

Configure the LED test to recognize user-programmable pushbutton 1 by making the following entries in the **SETTINGS ⇨ PRODUCT SETUP ⇨⇩ USER-PROGRAMMABLE LEDS ⇨ LED TEST** menu:

LED TEST FUNCTION: "Enabled"
LED TEST CONTROL: "PUSHBUTTON 1 ON"

The test is initiated when the user-programmable pushbutton 1 is pressed. Keep the pushbutton pressed for as long as the LEDs are being visually inspected. When finished, release the pushbutton. The relay then automatically starts stage 2. At this point, test can be cancelled by pressing the pushbutton.

Application example 2

Assume one needs to check if any LEDs are "burned" as well as exercise one LED at a time to check for other failures. This is to be performed via user-programmable pushbutton 1.

After applying the settings in application example 1, hold down the pushbutton as long as necessary to test all LEDs. When finished, release the pushbutton so that the relay then automatically starts stage 2. When stage 2 is completed, stage 3 starts automatically. The test can be cancelled at any time by pressing the pushbutton.

5.3.11.4 Trip and alarm LEDs

SETTINGS ⇨ PRODUCT SETUP ⇨⇩ USER-PROGRAMMABLE LEDS ⇨⇩ TRIP & ALARMS LEDS

■ TRIP & ALARM LEDS ■	⇔	TRIP LED INPUT: Off	Range: FlexLogic operand
	⇩	ALARM LED INPUT: Off	Range: FlexLogic operand

The trip and alarm LEDs are in the first LED column (enhanced and graphical front panels) and on LED panel 1 (basic front panel). Each LED can be programmed to turn on when the selected FlexLogic operand is in the logic 1 state.

5.3.11.5 User-programmable LED 1(48)

SETTINGS ⇨ PRODUCT SETUP ⇨⇩ USER-PROGRAMMABLE LEDS ⇨⇩ USER-PROGRAMMABLE LED 1(48)

■ USER-PROGRAMMABLE ■ LED 1	⇔	LED 1 OPERAND: Off	Range: FlexLogic operand
	⇧	LED 1 TYPE: Self-Reset	Range: Self-Reset, Latched

For the enhanced and basic front panels, there are 48 amber LEDs across the relay LED panels. Each of these indicators can be programmed to illuminate when the selected FlexLogic operand is in the logic 1 state.

For the basic front panel, the LEDs are located as follows:

- LED Panel 2 — User-programmable LEDs 1 through 24
- LED Panel 3 — User programmable LEDs 25 through 48

For the enhanced front panel, the LEDs are located as follows:

- LED column 2 — User-programmable LEDs 1 through 12
- LED column 3 — User-programmable LEDs 13 through 24
- LED column 4 — User-programmable LEDs 25 through 36
- LED column 5 — User-programmable LEDs 37 through 48

See the LED Indicators section in chapter 4 for information on the location of these indexed LEDs.

The user-programmable LED settings select the FlexLogic operands that control the LEDs. If the **LED 1 TYPE** setting is "Self-Reset" (the default setting), the LED illumination tracks the state of the selected LED operand. If the **LED 1 TYPE** setting is "Latched," the LED, once lit, remains so until reset by the front panel **RESET** button, from a remote device via a communications channel, or from any programmed operand, even if the LED operand state de-asserts.

Table 5-15: Recommended settings for user-programmable LEDs

Setting	Parameter	Setting	Parameter
LED 1 operand	SETTING GROUP ACT 1	LED 13 operand	Off
LED 2 operand	SETTING GROUP ACT 2	LED 14 operand	Off
LED 3 operand	SETTING GROUP ACT 3	LED 15 operand	Off
LED 4 operand	SETTING GROUP ACT 4	LED 16 operand	Off
LED 5 operand	SETTING GROUP ACT 5	LED 17 operand	Off
LED 6 operand	SETTING GROUP ACT 6	LED 18 operand	Off
LED 7 operand	Off	LED 19 operand	Off
LED 8 operand	Off	LED 20 operand	Off
LED 9 operand	Off	LED 21 operand	Off
LED 10 operand	Off	LED 22 operand	Off
LED 11 operand	Off	LED 23 operand	Off
LED 12 operand	Off	LED 24 operand	Off

See the figure in the Setting Groups section of the Control Elements section later in this chapter for an example of group activation.

5.3.11.6 Event cause LED 1(9)

SETTINGS ⇨ PRODUCT SETUP ⇨⇩ USER-PROGRAMMABLE LEDS ⇨⇩ EVENT CAUSE LED 1(9)

■ EVENT CAUSE ■ LED 1	⇔	LED 1 OPERAND: LED PICKUP	Range: FlexLogic operand
	⇩	LED 1 COLOR: Green	Range: Red, Green, Orange
	⇩	LED 1 TYPE: Self-Reset	Range: Self-Reset, Latched

For the graphical front panel, the event cause LED settings select the FlexLogic operands that control the LEDs.

LED 1 TYPE — If set to "Self-Reset," the LED illumination tracks the state of the selected LED operand. If set to "Latched," the LED, once lit, remains so even the LED operand state already de-asserts, until reset by the front panel **RESET** button, from a remote device via a communications channel, or from any programmed operand.

The table outlines default input operand and output operands for each event cause LED.

Table 5-16: Default input and output operand for event cause LEDs

LED	Default input operand	Output operand	Default color
Event Cause LED 1	LED PICKUP	EVENT CAUSE LED 1	Green
Event Cause LED 2	LED VOLTAGE	EVENT CAUSE LED 2	Orange
Event Cause LED 3	LED CURRENT	EVENT CAUSE LED 3	Orange
Event Cause LED 4	LED FREQUENCY	EVENT CAUSE LED 4	Orange
Event Cause LED 5	LED OTHER	EVENT CAUSE LED 5	Orange
Event Cause LED 6	LED PHASE A	EVENT CAUSE LED 6	Orange
Event Cause LED 7	LED PHASE B	EVENT CAUSE LED 7	Orange
Event Cause LED 8	LED PHASE C	EVENT CAUSE LED 8	Orange
Event Cause LED 9	LED NEUTRAL/GROUND	EVENT CAUSE LED 9	Orange

5.3.12 User-programmable self tests

SETTINGS ⇨ PRODUCT SETUP ⇨⇩ USER-PROGRAMMABLE SELF TESTS

■ USER-PROGRAMMABLE ■ SELF TESTS	⇔	DIRECT RING BREAK FUNCTION: Enabled	Range: Disabled, Enabled. Valid for units equipped with Direct Input/Output module.
	⇩	DIRECT DEVICE OFF FUNCTION: Enabled	Range: Disabled, Enabled. Valid for units equipped with Direct Input/Output module.
	⇩	RxGOOSE OFF FUNCTION: Enabled	Range: Disabled, Enabled
	⇩	FIRST ETHERNET FAIL FUNCTION: Disabled	Range: Disabled, Enabled
	⇩	SEC. ETHERNET FAIL FUNCTION: Disabled	Range: Disabled, Enabled
	⇩	THIRD ETHERNET FAIL FUNCTION: Disabled	Range: Disabled, Enabled
	⇩	SFP MODULE FAIL FUNCTION: Disabled	Range: Disabled, Enabled
	⇩	BATTERY FAIL FUNCTION: Enabled	Range: Disabled, Enabled

⇕	SNTP FAIL FUNCTION: Enabled	Range: Disabled, Enabled
⇕	IRIG-B FAIL FUNCTION: Enabled	Range: Disabled, Enabled
⇕	PTP FAIL FUNCTION: Enabled	Range: Disabled, Enabled
⇕	SV STREAM TROUBLE FUNCTION: Enabled	Range: Disabled, Enabled
⇕	PB ETH PORT 1a FAIL FUNCTION: Disabled	Range: Disabled, Enabled
	⇩	
⇕	PB ETH PORT Port 4b FAIL FUNCTION: Disabled	Range: Disabled, Enabled
⇕	PB SFP MODUL 1a FAIL FUNCTION: Disabled	Range: Disabled, Enabled
	⇩	
⇧	PB SFP MODUL 4b FAIL FUNCTION: Disabled	Range: Disabled, Enabled

All major self-test alarms are reported automatically with their corresponding FlexLogic operands, events, and targets.

This settings menu allows enabling and disabling of most minor self-test alarms.

When in the Disabled mode, minor alarms do not assert a FlexLogic operand, write to the event recorder, or display target messages. Moreover, they do not trigger the ANY MINOR ALARM or ANY SELF-TEST messages. When in Enabled mode, minor alarms continue to function along with other major and minor alarms. See the Relay Self-tests section in chapter 7 for information on major and minor self-test alarms.

When using the graphical front panel and setting annunciator alarms, the function needs to be enabled here too, else the alarm is not triggered.

PB SFP MODUL # FAIL FUNCTION — For order code H85, ports 2a, 2b, 4a, 4b are not available.

5.3.13 Control pushbuttons

SETTINGS ⇨ PRODUCT SETUP ⇨⇩ CONTROL PUSHBUTTONS ⇨ CONTROL PUSHBUTTON 1(7)

■ CONTROL ■ PUSHBUTTON 1	⇔	CNTRL PUSHBUTTN 1 ID CTRL PB 1	Range: up to 20 alphanumeric characters
	⇕	CONTROL PUSHBUTTON 1 FUNCTION: Disabled	Range: Disabled, Enabled
	⇧	CONTROL PUSHBUTTON 1 EVENTS: Disabled	Range: Disabled, Enabled

This feature is supported with enhanced and basic front panels.

There are three standard control pushbuttons, labeled USER 1, USER 2, and USER 3, on the basic and enhanced front panels. These are user-programmable and can be used for various applications such as performing an LED test, switching setting groups, and invoking and scrolling though user-programmable displays.

The locations of the control pushbuttons are shown in the following figures.

Figure 5-52: Control pushbuttons (enhanced front panel)

An additional four control pushbuttons are included on the basic front panel when the C70 is ordered with the 12 user-programmable pushbutton option.

Figure 5-53: Control pushbuttons (basic front panel)

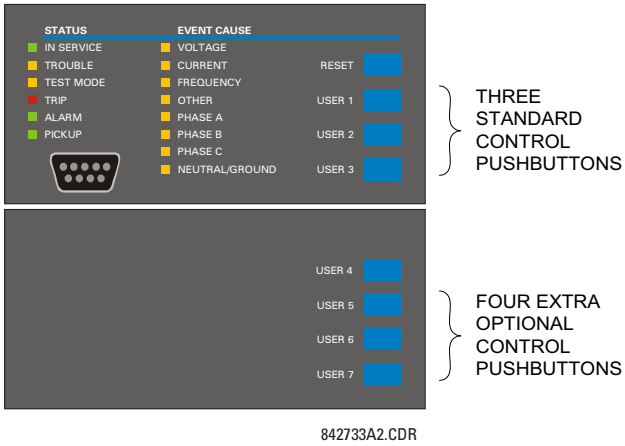

Control pushbuttons are not typically used for critical operations and are not protected by the control password. However, by supervising their output operands, the user can dynamically enable or disable control pushbuttons for security reasons.

Each control pushbutton asserts its own FlexLogic operand. Each operand need to be configured appropriately to perform the required function. Each operand remains asserted as long as the pushbutton is pressed and resets when the pushbutton is released. A dropout delay of 100 ms is incorporated to ensure fast pushbutton manipulation is recognized by various features that can use control pushbuttons as inputs.

An event is logged in the event record (as per user setting) when a control pushbutton is pressed. No event is logged when the pushbutton is released. The front panel keys (including control keys) cannot be operated simultaneously—a given key must be released before the next one can be pressed.

Figure 5-54: Control pushbutton logic

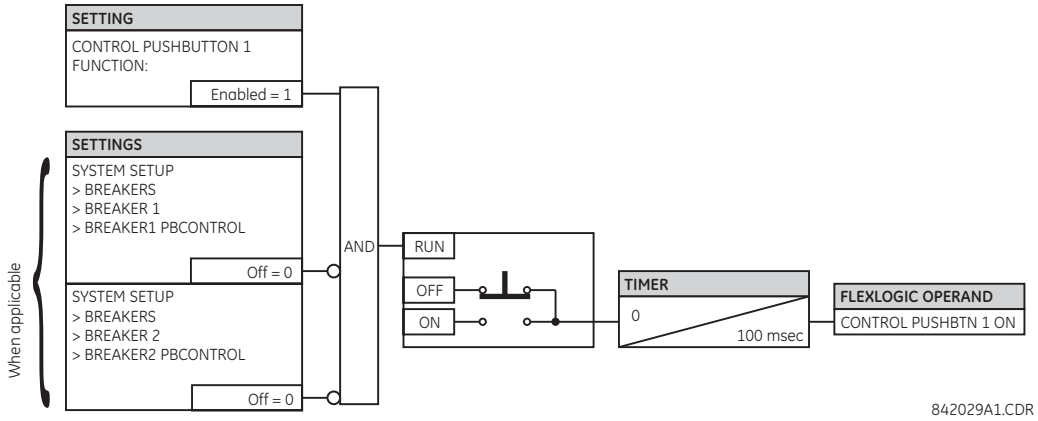

5.3.14 User-programmable pushbuttons

SETTINGS ⇨ PRODUCT SETUP ⇨⇩ USER-PROGRAMMABLE PUSHBUTTONS ⇨ USER PUSHBUTTON 1(16)

■ USER PUSHBUTTON 1 ■	⇔	PUSHBUTTON 1 FUNCTION: Disabled	Range: Self-Reset, Latched, Disabled
	⇩	PUSHBTN 1 ID TEXT: USER PB 1	Range: up to 20 alphanumeric characters
	⇩	PUSHBTN 1 ON TEXT: PUSHBTN 1 ON	Range: up to 20 alphanumeric characters
	⇩	PUSHBTN 1 OFF TEXT: PUSHBTN 1 OFF	Range: up to 20 alphanumeric characters
	⇩	PUSHBTN 1 HOLD: 0.1 s	Range: 0.0 to 10.0 s in steps of 0.1
	⇩	PUSHBTN 1 SET: Off	Range: FlexLogic operand
	⇩	PUSHBTN 1 RESET: Off	Range: FlexLogic operand
	⇩	PUSHBTN 1 AUTORST: Disabled	Range: Disabled, Enabled
	⇩	PUSHBTN 1 AUTORST DELAY: 1.0 s	Range: 0.2 to 600.0 s in steps of 0.1
	⇩	PUSHBTN 1 REMOTE: Off	Range: FlexLogic operand
	⇩	PUSHBTN 1 LOCAL: Off	Range: FlexLogic operand
	⇩	PUSHBTN 1 DROP-OUT TIME: 0.00 s	Range: 0 to 60.00 s in steps of 0.05
	⇩	PUSHBTN 1 LED CTL: Off	Range: FlexLogic operand
	⇩	PUSHBTN 1 MESSAGE: Disabled	Range: Disabled, Normal, High Priority
	⇧	PUSHBUTTON 1 EVENTS: Disabled	Range: Disabled, Enabled

This feature is optional, specified at the time of ordering.

User-programmable pushbuttons provide an easy and error-free method of entering digital state (on, off) information. The number depends on the front panel ordered.

- Enhanced horizontal front panel — 16 user-programmable pushbuttons
- Enhanced vertical front panel — 6 user-programmable pushbuttons
- Basic horizontal front panel — 12 user-programmable pushbuttons
- Graphical front panel — 16 user-programmable pushbuttons (eight physical pushbuttons, eight graphical interface pushbuttons)

NOTE

User-programmable pushbuttons require a front panel with that option. If the front panel was ordered separately, update the EnerVista software under **Maintenance > Change Front Panel**.

The digital state can be entered locally (by directly pressing the front panel pushbutton or optional graphical front panel interface) or remotely (via FlexLogic operands) into FlexLogic equations, protection elements, and control elements. Typical applications include breaker control, autorecloser blocking, and setting groups changes. For example, set pushbuttons 1 to 5 to select settings groups 1 to 5, or set pushbutton 1 to clear event records. The user-programmable pushbuttons are under the control level of password protection.

5

Example

To clear event records using pushbutton 1, set **Settings > Product Setup > Clear Relay Records > Clear Event Records** to FlexLogic operand PUSHBUTTON 1 ON. Then program the pushbutton by setting **Settings > Product Setup > User-Programmable Pushbuttons > Pushbutton 1 Function** to "Self-reset." For a graphical front panel, to use a pushbutton by the screen to clear the event records, it also needs to be programmed in a single-line diagram.

The figures show user-configurable pushbuttons for the front panels.

Figure 5-55: User-programmable pushbuttons (enhanced front panel)

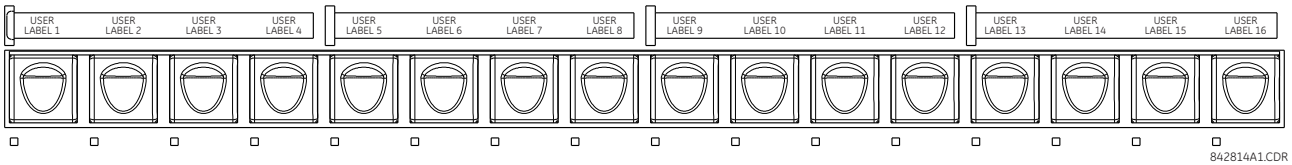

Figure 5-56: User-programmable pushbuttons (basic front panel)

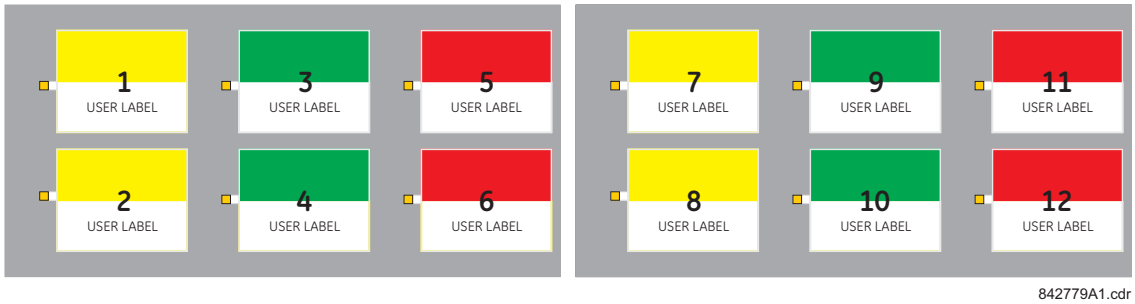

Figure 5-57: User-programmable pushbuttons (graphical front panel; B30 shown)

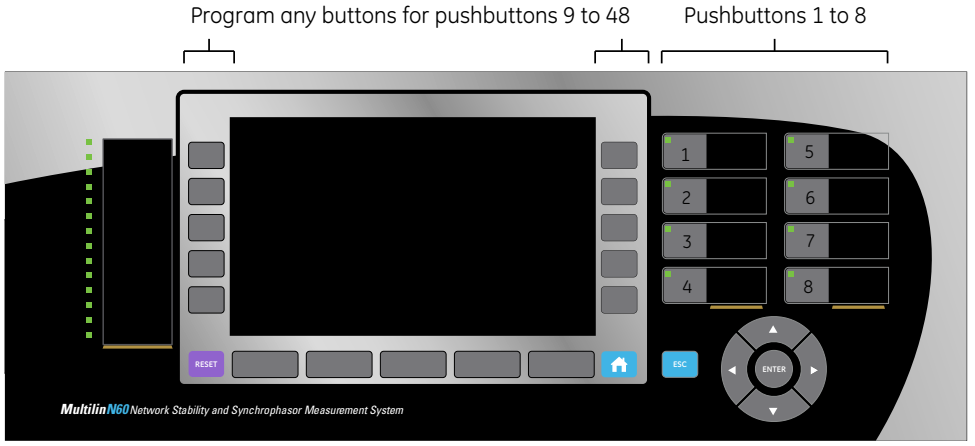

859802A1.CDR

Front panel pushbuttons and LEDs can be custom labeled as outlined in the Front Panel Labeling section in the previous chapter.

Each pushbutton asserts its own "On" and "Off" FlexLogic operands (for example, PUSHBUTTON 1 ON and PUSHBUTTON 1 OFF). These operands are available for each pushbutton and are used to program specific actions. If any pushbutton is active, the ANY PB ON operand is asserted.

Each pushbutton has an associated LED indicator. By default, this indicator displays the present status of the corresponding pushbutton (on or off). However, each LED indicator can be assigned to any FlexLogic operand through the **PUSHBTN 1 LED CTL** setting.

The activation and deactivation of user-programmable pushbuttons depends on whether latched or self-reset mode is programmed.

- **Latched mode** — In latched mode, a pushbutton can be set (activated) by asserting the operand assigned to the **PUSHBTN 1 SET** setting, by directly pressing the associated front panel pushbutton, or with the graphical front panel interface. The state of each pushbutton is stored in non-volatile memory and maintained through a loss of control power.

  The pushbutton is reset (deactivated) in latched mode by asserting the operand assigned to the **PUSHBTN 1 RESET** setting, by directly pressing the active front panel pushbutton, or with the graphical front panel interface.

  It can also be programmed to reset automatically through the **PUSHBTN 1 AUTORST** and **PUSHBTN 1 AUTORST DELAY** settings. These settings enable the autoreset timer and specify the associated time delay. The autoreset timer can be used in select-before-operate (SBO) breaker control applications, where the command type (close/open) or breaker location (feeder number) must be selected prior to command execution. The selection must reset automatically if control is not executed within a specified time period.
- **Self-reset mode** — In self-reset mode, a user-programmable pushbutton can be set (activated) by asserting the operand assigned to the **PUSHBTN 1 SET** setting, by pressing the front panel pushbutton, or by the graphical front panel interface. A pushbutton remains active for the time it is pressed physically or pressed in the graphical front panel interface, plus the dropout time specified in the **PUSHBTN 1 DROP-OUT TIME** setting. If the pushbutton is activated via FlexLogic, the pulse duration is specified by the **PUSHBTN 1 DROP-OUT TIME** only. The time the operand assigned to the **PUSHBTN 1 SET** setting remains On has no effect on the pulse duration.

NOTE

The pulse duration of the remote set or local front panel pushbutton must be at least 56 ms for a 60 Hz system or 60 ms for a 50 Hz system to operate the pushbutton. This allows the user-programmable pushbuttons to properly operate during power cycling events and various system disturbances that can cause transient assertion of the operating signals.

The local and remote operation of each user-programmable pushbutton can be inhibited through the **PUSHBTN 1 LOCAL** and **PUSHBTN 1 REMOTE** settings. If local inhibit is applied, the pushbutton ignores set and reset commands executed through the front panel pushbuttons. If remote inhibit is applied, the pushbutton ignores set and reset commands executed through FlexLogic operands.

The inhibit functions are not applied to the autoreset feature. The inhibit function can be used in SBO control operations to prevent user-programmable pushbutton activation and ensuring “one-at-a-time” select operation.

The inhibit functions can also be used to prevent pushbutton activation from the accidental pressing of the front panel pushbuttons. The separate inhibit of the local and remote operation simplifies the implementation of local/remote control supervision.

Pushbutton states can be logged by the event recorder. User-defined messages can also be associated with each pushbutton and displayed on basic and enhanced front panels when the user-programmable pushbutton is activated, and when in the latched mode when the user-programmable pushbutton is deactivated. With the graphical front panel interface, instead of messages, the status of user-programmable pushbuttons can display on a single-line diagram and can also display in annunciator page windows and in actual values page cells.

For the graphical front panel, the pushbuttons 1 to 8 are linked to the eight physical pushbuttons, and pushbuttons 9 and above are mapped to the graphical interface pushbuttons. To set the buttons for pushbuttons 9 and above, access **Settings > Product Setup > Graphical Panel > Single Line Diagram Editor**, click the PB symbol in the toolbox, then configure pushbuttons 9 and above.

PUSHBUTTON 1 FUNCTION — This setting selects the mode of the pushbutton (Self-Reset, Latched, Disabled). If set to “Disabled,” the pushbutton is not active and the corresponding FlexLogic operands (both “On” and “Off”) are de-asserted. If set to "Latched," the pushbutton remains on until reset.

5

PUSHBTN 1 ID TEXT — This setting specifies the top 20-character line of the user-programmable pushbutton message and is intended to provide ID information of the pushbutton. For example, the text displays in the Event Record. See the User-definable Displays section in this chapter for instructions on how to enter alphanumeric characters from the keypad. On a graphical front panel, this setting instead controls the label of the user-programmable pushbutton component on single-line diagrams.

PUSHBTN 1 ON TEXT — This setting specifies the bottom 20-character line of the user-programmable pushbutton message and is displayed when the pushbutton is in the “on” position. See the User-definable Displays section for instructions on entering alphanumeric characters from the keypad. On a graphical front panel, this setting instead controls the on status text of the user-programmable pushbutton component on single-line diagrams. This setting is not applied to the physical pushbuttons on the graphical front panel.

PUSHBTN 1 OFF TEXT — This setting specifies the bottom 20-character line of the user-programmable pushbutton message and displays when the pushbutton is deactivated and the **PUSHBUTTON 1 FUNCTION** is “Latched.” A message does not display when the **PUSHBUTTON 1 FUNCTION** is “Self-reset” as the pushbutton operand status is implied to be “Off” upon its release. The length of the “Off” message is configured with the **PRODUCT SETUP ⇨⇩ DISPLAY PROPERTIES ⇨ FLASH MESSAGE TIME** setting. On a graphical front panel, this setting instead controls the off status text of the user-programmable pushbutton component on single-line diagrams. This setting is not applied to the physical pushbuttons on the graphical front panel.

PUSHBTN 1 HOLD — This setting specifies the time required for a front panel pushbutton to be pressed before it is deemed active. This timer is reset upon release of the pushbutton. Note that user-programmable pushbutton operation requires the front panel pushbutton to be pressed a minimum of 56 ms for a 60 Hz system or 60 ms for a 50 Hz system. This minimum time is required prior to activating the user-programmable pushbutton hold timer.

PUSHBTN 1 SET — This setting assigns the FlexLogic operand serving to activate the user-programmable pushbutton element. The duration of the incoming set signal must be at least 56 ms for a 60 Hz system or 60 ms for a 50 Hz system.

PUSHBTN 1 RESET — This setting assigns the FlexLogic operand serving to deactivate the user-programmable pushbutton element. This setting is applicable only if the user-programmable pushbutton is in "Latched" mode.

PUSHBTN 1 AUTORST — This setting enables the user-programmable pushbutton autoreset feature. This setting is applicable only if the pushbutton is in “Latched” mode.

PUSHBTN 1 AUTORST DELAY — This setting specifies the time delay for automatic reset of the pushbutton when in "Latched" mode.

PUSHBTN 1 REMOTE — This setting assigns the FlexLogic operand serving to inhibit user-programmable pushbutton operation from the operand assigned to the **PUSHBTN 1 SET** or **PUSHBTN 1 RESET** settings.

PUSHBTN 1 LOCAL — This setting assigns the FlexLogic operand serving to inhibit user-programmable pushbutton operation from the front panel pushbuttons. This inhibit functionality is not applicable to pushbutton autoreset.

PUSHBTN 1 DROP-OUT TIME — This setting applies only to “Self-Reset” mode and specifies the duration of the user-programmable pushbutton active status after the front panel pushbutton or graphical front panel interface pushbutton has been released. When activated remotely, this setting specifies the entire activation time of the pushbutton; the length of time the operand selected by **PUSHBTN 1 SET** remains on has no effect on the pulse duration.

PUSHBTN 1 LED CTL — This setting assigns the FlexLogic operand serving to drive the front panel pushbutton LED. If this setting is “Off,” then LED operation is directly linked to the PUSHBUTTON 1 ON operand. This setting is not applied to pushbuttons 9 and above on the graphical front panel, where the label background shows the orange glow color for the "on" state.

PUSHBTN 1 MESSAGE — This setting controls the behavior of the user-programmable pushbutton on message that is programmed in the **PUSHBTN 1 ID** and **PUSHBTN 1 ON TEXT** settings, and the behavior of the user-programmable pushbutton off message that is programmed in the **PUSHBTN 1 ID** and **PUSHBTN 1 OFF TEXT** settings. This settings has no effect on the graphical front panel.

When set to "Disabled," user-programmable pushbutton messages do not display. Otherwise the on message displays when the user-programmable pushbutton becomes activated, and if in the "Latched" mode the off message displays when the user-programmable pushbutton becomes deactivated.

When set to "Normal," the duration the message displays is as specified by the **FLASH MESSAGE TIME** setting.

When set to "High Priority," the duration of the off message is as specified by the **FLASH MESSAGE TIME** setting, but the on message is displayed as long as the user-programmable pushbutton is activated. While activated, target and other messages are suppressed. To allow front panel keypad operation, when a keypad button is pressed the message is suppressed for 10 seconds.

PUSHBUTTON 1 EVENTS — If this setting is enabled, each user-programmable pushbutton state change is logged as an event into the event recorder.

The figures show the user-programmable pushbutton logic.

Figure 5-58: User-programmable pushbutton logic (Sheet 1 of 2)

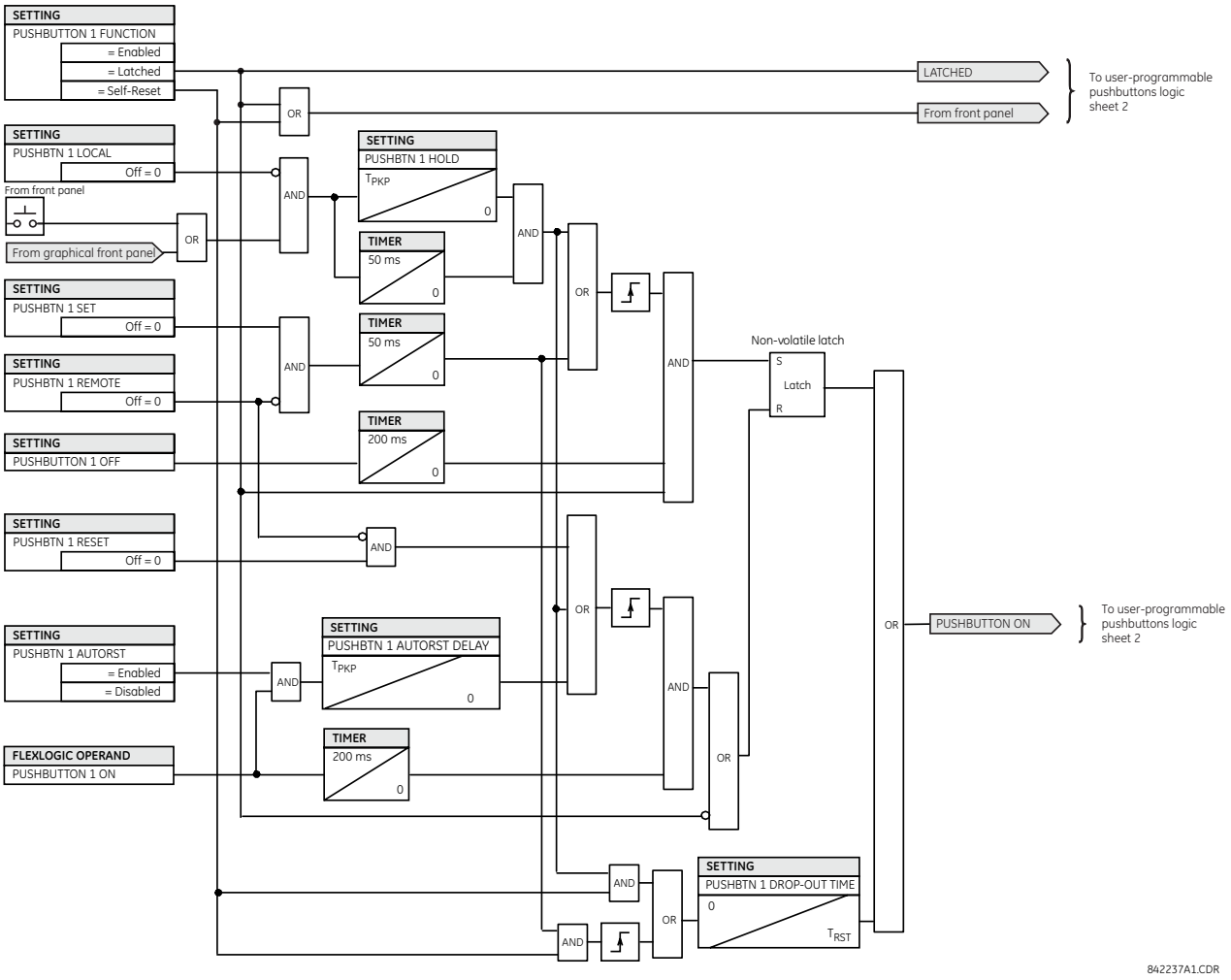

Figure 5-59: User-programmable pushbutton logic (Sheet 2 of 2)

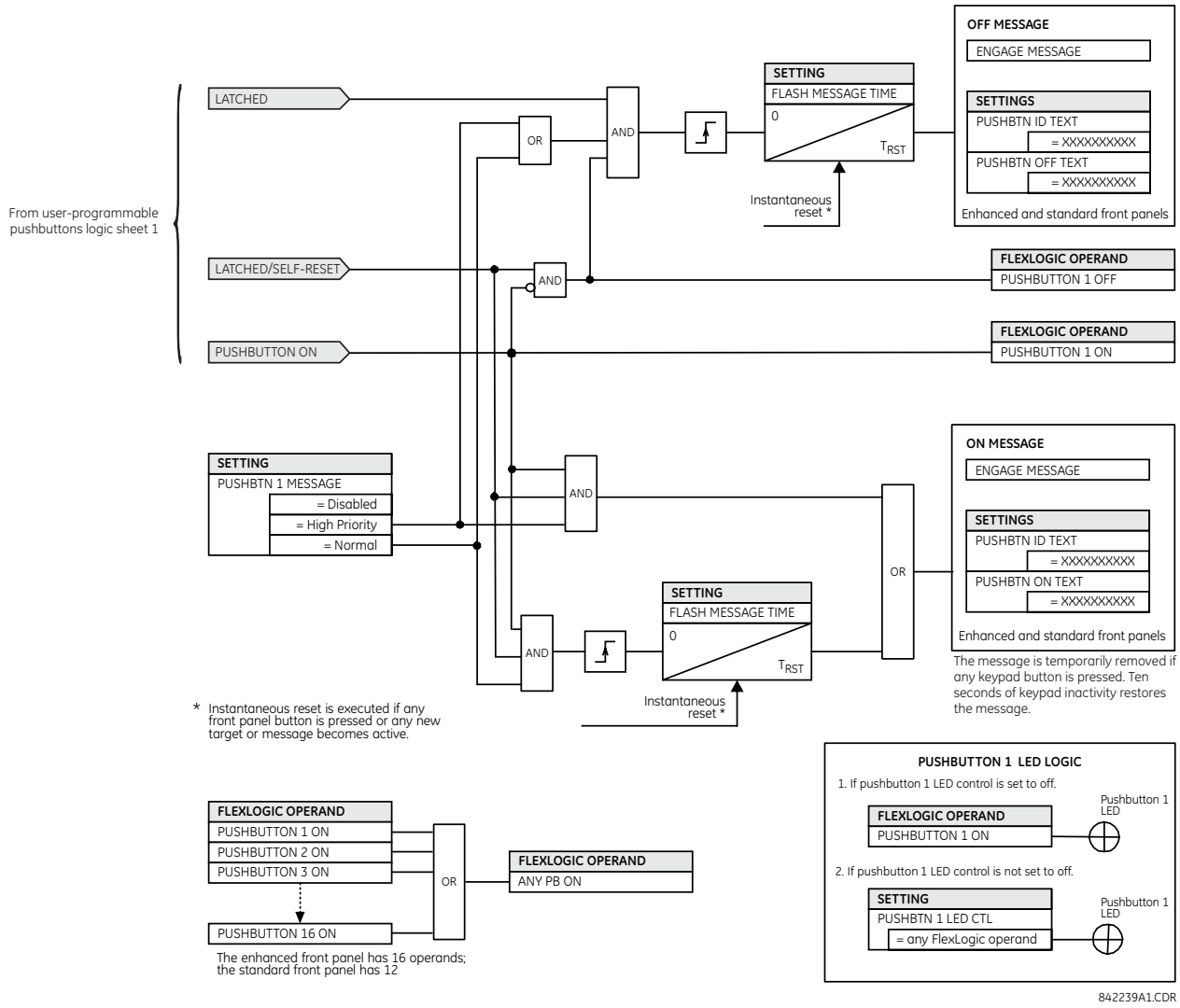

5.3.15 Flex state parameters

SETTINGS ⇨ PRODUCT SETUP ⇨⇩ FLEX STATE PARAMETERS

■ FLEX STATE ■ PARAMETERS	⇔	PARAMETER 1: Off	Range: FlexLogic operand
		⇩	
	⇧	PARAMETER 256: Off	Range: FlexLogic operand

This feature provides a mechanism where any of 256 selected FlexLogic operand states can be used for efficient monitoring. The feature allows user-customized access to the FlexLogic operand states in the relay. The state bits are packed so that 16 states are readable in a single Modbus register. The state bits can be configured so that all states of interest are available in a minimum number of Modbus registers.

The state bits can be read out in the "Flex States" register array beginning at Modbus address 0900h. Sixteen states are packed into each register, with the lowest-numbered state in the lowest-order bit. Sixteen registers accommodate the 256 state bits.

5.3.16 User-definable displays

5.3.16.1 Menu

SETTINGS ⇨ PRODUCT SETUP ⇨⇩ USER-DEFINABLE DISPLAYS

■ USER-DEFINABLE ■ DISPLAYS	⇔	INVOKE AND SCROLL: Off	Range: FlexLogic operand
	⇩	■ USER DISPLAY 1 ■	See below
	⇩		
	⇧	■ USER DISPLAY 16 ■	

This feature is supported with enhanced and basic front panels.

This menu provides a mechanism for manually creating up to 16 user-defined information displays in a convenient viewing sequence in the **USER DISPLAY** menu (between the **TARGETS** and **ACTUAL VALUES** top-level menus). The sub-menus facilitate text entry and Modbus register data pointer options for defining the user display content.

This feature is not supported with the optional graphical front panel.

Once programmed, the user-definable displays can be viewed in two ways.

- **Keypad** — Use the **MENU** key to select the **USER DISPLAY** menu item to access the first user-definable display (note that only the programmed screens are displayed). The screens can be scrolled using the up and down arrow keys. The display disappears after the default message time-out period specified by the **PRODUCT SETUP ⇨⇩ DISPLAY PROPERTIES ⇨⇩ DEFAULT MESSAGE TIMEOUT** setting.
- **User-programmable control input** — The user-definable displays also respond to the **INVOKE AND SCROLL** setting. Any FlexLogic operand (in particular, the user-programmable pushbutton operands), can be used to navigate the programmed displays.

  On the rising edge of the configured operand (such as when the pushbutton is pressed), the displays are invoked by showing the last user-definable display shown during the previous activity. From this moment onward, the operand acts exactly as the down key and allows scrolling through the configured displays. The last display wraps up to the first one. The **INVOKE AND SCROLL** input and the down arrow key operate concurrently.

  When the default timer expires (set by the **DEFAULT MESSAGE TIMEOUT** setting), the relay starts to cycle through the user displays. The next activity of the **INVOKE AND SCROLL** input stops the cycling at the currently displayed user display, not at the first user-defined display. The **INVOKE AND SCROLL** pulses must last for at least 250 ms to take effect.

5.3.16.2 User display 1(16)

SETTINGS ⇨ PRODUCT SETUP ⇨⇩ USER-DEFINABLE DISPLAYS ⇨⇩ USER DISPLAY 1(16)

■ USER DISPLAY 1 ■	⇔	DISP 1 TOP LINE:	Range: up to 20 alphanumeric characters
	⇩	DISP 1 BOTTOM LINE:	Range: up to 20 alphanumeric characters
	⇩	DISP 1 ITEM 1: 0	Range: 0 to 65535 in steps of 1
	⇩		
	⇧	DISP 1 ITEM 5: 0	Range: 0 to 65535 in steps of 1

Any existing system display can be automatically copied into an available user display by selecting the existing display and pressing the **ENTER** key. The display then prompts with ADD TO USER DISPLAY LIST? After selecting "Yes," a message indicates that the selected display has been added to the user display list. When this type of entry occurs, the sub-menus are automatically configured with the proper content—this content can be edited subsequently.

This menu is used to enter user-defined text and user-selected Modbus-registered data fields into the particular user display. Each user display consists of two 20-character lines (top and bottom). The tilde (~) character is used to mark the start of a data field – the length of the data field needs to be accounted for. Up to five separate data fields can be entered in a user display – the *n*th tilde (~) refers to the *n*th item.

A user display can be entered from the front panel keypad or the EnerVista interface (preferred for convenience). The following procedure shows how to enter text characters in the top and bottom lines from the front panel keypad. Press the **HELP** key at any time for context sensitive help information.

1. Select the line to be edited.
2. Press the decimal key to enter text edit mode.
3. Use either **VALUE** key to scroll through the characters. A space is selected like a character.
4. Press the decimal key to advance the cursor to the next position.
5. Repeat step 3 and continue entering characters until the desired text is displayed.
6. Press the **ENTER** key to store the new settings.

To enter a numerical value for any of the five items (the *decimal form* of the selected Modbus address) from the front panel keypad, use the number keypad. Use the value of "0" for any items not being used. Use the **HELP** key at any selected system display (setting, actual value, or command) which has a Modbus address, to view the *hexadecimal form* of the Modbus address, then manually convert it to decimal form before entering it (EnerVista usage conveniently facilitates this conversion). See the Modbus Memory Map section earlier in this chapter for information on how to calculate the decimal value to enter on the front panel.

Use the **MENU** key to go to the user displays menu to view the user-defined content. The current user displays show in sequence, changing every four seconds. While viewing a user display, press the **ENTER** key and then select the 'Yes" option to remove the display from the user display list. Use the **MENU** key again to exit the user displays menu.

An example of user display setup and result is shown as follows.

■ **USER DISPLAY 1** ■	⇔	**DISP 1 TOP LINE:** **Current X ~ A**	Shows user-defined text with first tilde marker
	⇕	**DISP 1 BOTTOM LINE:** **Current Y ~ A**	Shows user-defined text with second tilde marker
	⇕	**DISP 1 ITEM 1:** **6016**	Shows decimal form of user-selected Modbus register address, corresponding to first tilde marker
	⇕	**DISP 1 ITEM 2:** **6357**	Shows decimal form of user-selected Modbus register address, corresponding to second tilde marker
	⇕	**DISP 1 ITEM 3:** **0**	This item is not being used. There is no corresponding tilde marker in top or bottom lines.
	⇕	**DISP 1 ITEM 4:** **0**	This item is not being used. There is no corresponding tilde marker in top or bottom lines.
	⇧	**DISP 1 ITEM 5:** **0**	This item is not being used. There is no corresponding tilde marker in top or bottom lines.
USER DISPLAYS	⇨	**Current X 0.850** **Current Y 0.327 A**	Shows the resultant display content

If the parameters for the top line and the bottom line items have the same units, then the unit is displayed on the bottom line only. The units are only displayed on both lines if the units specified both the top and bottom line items are different.

5.3.17 Direct inputs and outputs

5.3.17.1 Menu

SETTINGS ⇨ PRODUCT SETUP ⇨⇩ DIRECT I/O

■ DIRECT I/O ■	⇔	DIRECT OUTPUTS DEVICE ID: 1	Range: 1 to 16 in steps of 1
	⇩	DIRECT I/O CH1 RING CONFIGURATION: Yes	Range: Yes, No
	⇩	DIRECT I/O CH2 RING CONFIGURATION: Yes	Range: Yes, No
	⇩	DIRECT I/O DATA RATE: 64 kbps	Range: 64 kbps, 128 kbps
	⇩	DIRECT I/O CHANNEL CROSSOVER: Disabled	Range: Disabled, Enabled
	⇩	■ CRC ALARM CH1 ■	See page 5-143
	⇩	■ CRC ALARM CH2 ■	
	⇩	■ UNRETURNED ■ MESSAGES ALARM CH1	See page 5-144
	⇧	■ UNRETURNED ■ MESSAGES ALARM CH2	

5

SOFTWARE OPTION

This option is available when an Inter-Relay Communications card is specified at the time of ordering. With the option, direct inputs/outputs display by default. When you enable the teleprotection feature, direct I/O is not visible.

Direct inputs and outputs exchange status information (inputs and outputs) between UR-series relays connected directly via type 7 digital communications cards. The mechanism is very similar to IEC 61850 GOOSE, except that communications takes place over a non-switchable isolated network and is optimized for speed. On type 7 cards that support two channels, direct output messages are sent from both channels simultaneously. This effectively sends direct output messages both ways around a ring configuration. On type 7 cards that support one channel, direct output messages are sent only in one direction. Messages are resent (forwarded) when it is determined that the message did not originate at the receiver.

Direct Inputs and Outputs are initiated automatically and start running once at least one Direct Output in the given UR is set to anything but Off.

For the direct I/Os to function properly, all UR devices sending I/Os using an Inter-Relay Communications card must have identical firmware revisions.

NOTE

Teleprotection inputs/outputs and direct inputs/outputs are mutually exclusive. As such, they cannot be used simultaneously. Once teleprotection inputs and outputs are enabled, direct inputs and outputs are disabled, and vice versa.

Direct output message timing is similar to GOOSE message timing. Integrity messages (with no state changes) are sent at least every 1000 ms. Messages with state changes are sent within the main pass scanning the inputs and asserting the outputs unless the communication channel bandwidth has been exceeded. Two self-tests are performed and signaled by the following FlexLogic operands:

- DIRECT RING BREAK (direct input/output ring break) — Indicates that direct output messages sent from a UR-series relay are not being received back by the relay
- DIRECT DEVICE 1 OFF to DIRECT DEVICE 16 OFF (direct device offline) — Indicate that direct output messages from at least one direct device are not being received

Direct input and output settings are similar to remote input and output settings. The equivalent of the remote device name strings for direct inputs and outputs is the **DIRECT OUTPUT DEVICE ID** setting, which identifies the relay in all direct output messages. All UR-series IEDs in a ring need to have unique numbers assigned. The IED ID is used to identify the sender of the direct input and output message.

If the direct input and output scheme is configured to operate in a ring (**DIRECT I/O CH1 RING CONFIGURATION** or **DIRECT I/O CH2 RING CONFIGURATION** is "Yes"), all direct output messages are received back. If not, the direct input/output ring break self-test is triggered. The self-test error is signaled by the DIRECT RING BREAK FlexLogic operand.

Select the **DIRECT I/O DATA RATE** to match the data capabilities of the communications channel. All IEDs communicating over direct inputs and outputs must be set to the same data rate. UR-series IEDs equipped with dual-channel communications cards apply the same data rate to both channels. Delivery time for direct input and output messages is approximately 0.2 of a power system cycle at 128 kbps and 0.4 of a power system cycle at 64 kbps, per each "bridge."

Table 5-17: Direct input and output data rates

Module	Supported data rates
2A, 2B	64 kbps
2E, 2F (legacy modules)	64 kbps
2G, 2H	128 kbps
2I, 2J	64 kbps, 128 kbps
72, 73	64 kbps, 128 kbps
74, 75	64 kbps
76, 77	64 kbps
7A, 7B, 7C, 7D	64 kbps, 128 kbps
7E, 7F, 7G	64 kbps
7H, 7I, 7J, 7K	64 kbps, 128 kbps
7L, 7M, 7N, 7P, 7Q	64 kbps
7R, 7S	64 kbps
7T, 7W	64 kbps

NOTE

The G.703 modules are fixed at 64 kbps. The **DIRECT I/O DATA RATE** setting is not applicable to these modules.

The **DIRECT I/O CHANNEL CROSSOVER** setting applies to a C70 with dual-channel communication cards and allows crossing over messages from channel 1 to channel 2. This places all UR-series IEDs into one direct input and output network regardless of the physical media of the two communication channels.

The following application examples illustrate the basic concepts for direct input and output configuration. See the Inputs and Outputs section in this chapter for information on configuring FlexLogic operands (flags, bits) to be exchanged.

Example 1: Extending the input/output capabilities of a UR-series relay

Consider an application that requires additional quantities of contact inputs or output contacts or lines of programmable logic that exceed the capabilities of a single UR-series chassis. The problem is solved by adding an extra UR-series IED, such as the C30, to satisfy the additional input and output and programmable logic requirements. The two IEDs are connected via single-channel digital communication cards as shown in the figure.

Figure 5-60: Input and output extension via direct inputs and outputs

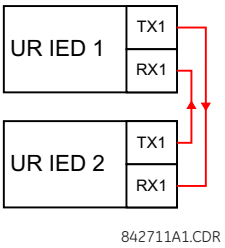

In this application, apply the following settings. For UR-series IED 1:

DIRECT OUTPUT DEVICE ID: "1"
DIRECT I/O CH1 RING CONFIGURATION: "Yes"
DIRECT I/O DATA RATE: "128 kbps"

For UR-series IED 2:

DIRECT OUTPUT DEVICE ID: "2"
DIRECT I/O CH1 RING CONFIGURATION: "Yes"
DIRECT I/O DATA RATE: "128 kbps"

The message delivery time is about 0.2 of power cycle in both ways (at 128 kbps); that is, from device 1 to device 2, and from device 2 to device 1. Different communications cards can be selected by the user for this back-to-back connection (for example: fiber, G.703, or RS422).

5

Example 2: Interlocking busbar protection

A simple interlocking busbar protection scheme could be accomplished by sending a blocking signal from downstream devices, say 2, 3, and 4, to the upstream device that monitors a single incomer of the busbar, as shown.

Figure 5-61: Sample interlocking busbar protection scheme

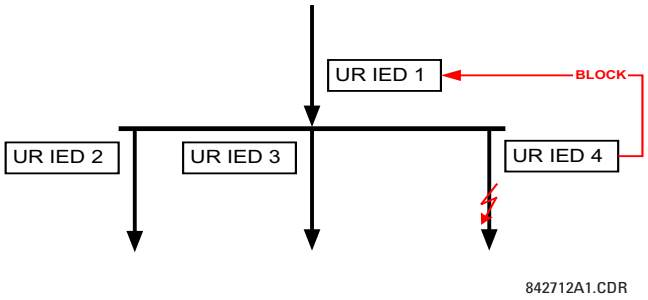

For increased reliability, a dual-ring configuration (shown as follows) is recommended for this application.

Figure 5-62: Interlocking bus protection scheme via direct inputs/outputs

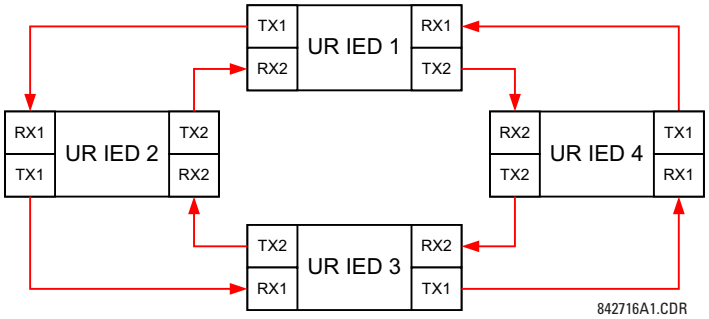

In this application, apply the following settings. For UR-series IED 1:

DIRECT OUTPUT DEVICE ID: "1"
DIRECT I/O CH1 RING CONFIGURATION: "Yes"
DIRECT I/O CH2 RING CONFIGURATION: "Yes"

For UR-series IED 2:

DIRECT OUTPUT DEVICE ID: "2"
DIRECT I/O CH1 RING CONFIGURATION: "Yes"
DIRECT I/O CH2 RING CONFIGURATION: "Yes"

For UR-series IED 3:

DIRECT OUTPUT DEVICE ID: "3"
DIRECT I/O CH1 RING CONFIGURATION: "Yes"
DIRECT I/O CH2 RING CONFIGURATION: "Yes"

For UR-series IED 4:

DIRECT OUTPUT DEVICE ID: "4"
DIRECT I/O CH1 RING CONFIGURATION: "Yes"
DIRECT I/O CH2 RING CONFIGURATION: "Yes"

Message delivery time is approximately 0.2 of power system cycle (at 128 kbps) times number of 'bridges' between the origin and destination. Dual-ring configuration effectively reduces the maximum 'communications distance' by a factor of two.

In this configuration the following delivery times are expected (at 128 kbps) if both rings are healthy:

IED 1 to IED 2: 0.2 of power system cycle
IED 1 to IED 3: 0.4 of power system cycle
IED 1 to IED 4: 0.2 of power system cycle
IED 2 to IED 3: 0.2 of power system cycle
IED 2 to IED 4: 0.4 of power system cycle
IED 3 to IED 4: 0.2 of power system cycle

If one ring is broken (say TX2-RX2) the delivery times are as follows:

IED 1 to IED 2: 0.2 of power system cycle
IED 1 to IED 3: 0.4 of power system cycle
IED 1 to IED 4: 0.6 of power system cycle
IED 2 to IED 3: 0.2 of power system cycle
IED 2 to IED 4: 0.4 of power system cycle
IED 3 to IED 4: 0.2 of power system cycle

A coordinating timer for this bus protection scheme could be selected to cover the worst case scenario (0.4 of a power system cycle). Upon detecting a broken ring, the coordination time is adaptively increased to 0.6 of a power system cycle. The complete application requires addressing a number of issues, such as failure of both the communications rings, failure or out-of-service conditions of one of the relays, and so on. Self-monitoring flags of the direct inputs and outputs feature primarily are used to address these concerns.

Example 3: Pilot-aided schemes

Consider the three-terminal line protection application shown.

Figure 5-63: Three-terminal line application

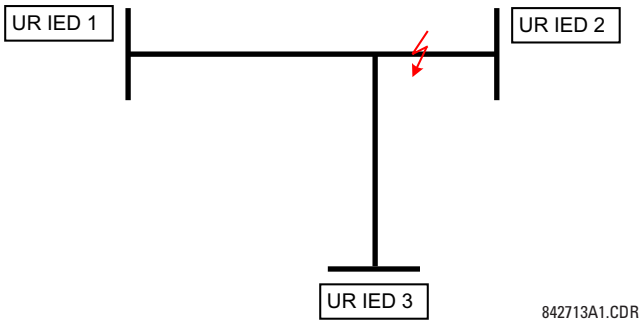

A permissive pilot-aided scheme can be implemented in a two-ring configuration, shown as follows (IEDs 1 and 2 constitute a first ring, while IEDs 2 and 3 constitute a second ring).

Figure 5-64: Single-channel open loop configuration

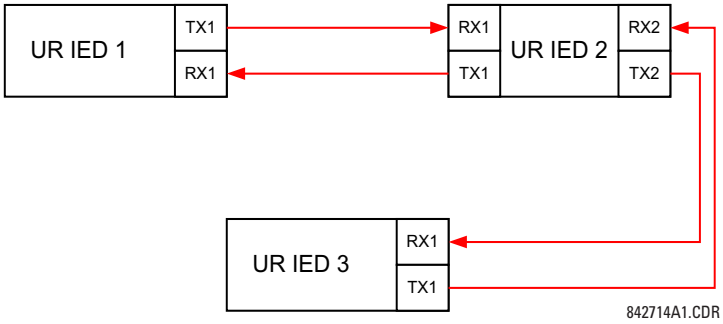

In this application, apply the following settings. For UR-series IED 1:

DIRECT OUTPUT DEVICE ID: "1"
DIRECT I/O CH1 RING CONFIGURATION: "Yes"
DIRECT I/O CH2 RING CONFIGURATION: "Yes"

For UR-series IED 2:

DIRECT OUTPUT DEVICE ID: "2"
DIRECT I/O CH1 RING CONFIGURATION: "Yes"
DIRECT I/O CH2 RING CONFIGURATION: "Yes"

For UR-series IED 3:

DIRECT OUTPUT DEVICE ID: "3"
DIRECT I/O CH1 RING CONFIGURATION: "Yes"
DIRECT I/O CH2 RING CONFIGURATION: "Yes"

In this configuration the following delivery times are expected (at 128 kbps):

IED 1 to IED 2: 0.2 of power system cycle
IED 1 to IED 3: 0.5 of power system cycle
IED 2 to IED 3: 0.2 of power system cycle

In this scheme, IEDs 1 and 3 do not communicate directly. IED 2 must be configured to forward the messages as explained in the Inputs and Outputs section. Implement a blocking pilot-aided scheme with more security and, ideally, faster message delivery time. This is accomplished using a dual-ring configuration as shown here.

Figure 5-65: Dual-channel closed loop (dual-ring) configuration

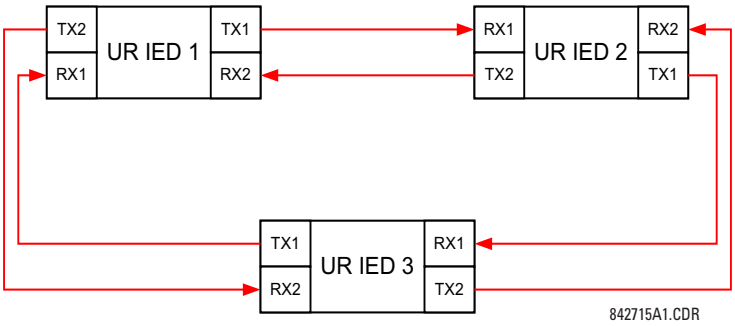

In this application, apply the following settings. For UR-series IED 1:

DIRECT OUTPUT DEVICE ID: "1"
DIRECT I/O CH1 RING CONFIGURATION: "Yes"
DIRECT I/O CH2 RING CONFIGURATION: "Yes"

For UR-series IED 2:

DIRECT OUTPUT DEVICE ID: "2"
DIRECT I/O CH1 RING CONFIGURATION: "Yes"
DIRECT I/O CH2 RING CONFIGURATION: "Yes"

For UR-series IED 3:

DIRECT OUTPUT DEVICE ID: "3"
DIRECT I/O CH1 RING CONFIGURATION: "Yes"
DIRECT I/O CH2 RING CONFIGURATION: "Yes"

In this configuration the following delivery times are expected (at 128 kbps) if both the rings are healthy:

IED 1 to IED 2: 0.2 of power system cycle
IED 1 to IED 3: 0.2 of power system cycle
IED 2 to IED 3: 0.2 of power system cycle

The two communications configurations can be applied to both permissive and blocking schemes. Take speed, reliability, and cost into account when selecting the required architecture.

5.3.17.2 CRC alarm CH1(2)

SETTINGS ⇨ PRODUCT SETUP ⇨⇩ DIRECT I/O ⇨⇩ CRC ALARM CH1(2)

■ CRC ALARM CH1 ■	⇔	CRC ALARM CH1 FUNCTION: Disabled	Range: Enabled, Disabled
	⇩	CRC ALARM CH1 MESSAGE COUNT: 600	Range: 100 to 10000 in steps of 1
	⇩	CRC ALARM CH1 THRESHOLD: 10	Range: 1 to 1000 in steps of 1
	⇩	CRC ALARM CH1 EVENTS: Disabled	Range: Enabled, Disabled

The C70 checks integrity of the incoming direct input and output messages using a 32-bit CRC. The CRC alarm function is available for monitoring the communication medium noise by tracking the rate of messages failing the CRC check. The monitoring function counts all incoming messages, including messages that failed the CRC check. A separate counter adds up messages that failed the CRC check. When the failed CRC counter reaches the user-defined level specified by the **CRC ALARM CH1 THRESHOLD** setting within the user-defined message count **CRC ALARM 1 CH1 COUNT**, the DIR IO CH1 CRC ALARM FlexLogic operand is set.

When the total message counter reaches the user-defined maximum specified by the **CRC ALARM CH1 MESSAGE COUNT** setting, both the counters reset and the monitoring process is restarted.

Configure the operand to drive an output contact, user-programmable LED, or selected communication-based output. Latching and acknowledging conditions—if required—are programmed accordingly.

The CRC alarm function is available on a per-channel basis. The total number of direct input and output messages that failed the CRC check is available as the **ACTUAL VALUES ⇨ STATUS ⇨⇩ DIRECT INPUTS ⇨⇩ CRC FAIL COUNT CH1** actual value.

- **Message count and length of the monitoring window** — To monitor communications integrity, the relay sends 1 message per second (at 64 kbps) or 2 messages per second (at 128 kbps) even if there is no change in the direct outputs. For example, setting the **CRC ALARM CH1 MESSAGE COUNT** to "10000," corresponds a time window of about 160 minutes at 64 kbps and 80 minutes at 128 kbps. If the messages are sent faster as a result of direct outputs activity, the monitoring time interval shortens. Take this into account when determining the **CRC ALARM CH1 MESSAGE COUNT** setting. For example, if the requirement is a maximum monitoring time interval of 10 minutes at 64 kbps, then the **CRC ALARM CH1 MESSAGE COUNT** is set to 10 × 60 × 1 = 600.
- **Correlation of failed CRC and bit error rate (BER)** — The CRC check can fail if one or more bits in a packet are corrupted. Therefore, an exact correlation between the CRC fail rate and the BER is not possible. Under certain assumptions an approximation can be made as follows. A direct input and output packet containing 20 bytes results in 160 bits of data being sent and therefore, a transmission of 63 packets is equivalent to 10,000 bits. A BER of 10^{-4} implies 1 bit error for every 10000 bits sent or received. Assuming the best case of only 1 bit error in a failed packet, having 1 failed packet for every 63 received is about equal to a BER of 10^{-4}.

5.3.17.3 Unreturned messages alarm CH1(2)

SETTINGS ⇨ PRODUCT SETUP ⇨⇩ DIRECT I/O ⇨⇩ UNRETURNED MESSAGES ALARM CH1(2)

■ UNRETURNED ■ MESSAGES ALARM CH1	⇔	UNRET MSGS ALARM CH1 FUNCTION: Disabled	Range: Enabled, Disabled
	⇩	UNRET MSGS ALARM CH1 MESSAGE COUNT: 600	Range: 100 to 10000 in steps of 1
	⇩	UNRET MSGS ALARM CH1 THRESHOLD: 10	Range: 1 to 1000 in steps of 1
	⇩	UNRET MSGS ALARM CH1 EVENTS: Disabled	Range: Enabled, Disabled

The C70 checks integrity of the direct input and output communication ring by counting unreturned messages. In the ring configuration, all messages originating at a given device should return within a pre-defined period of time. The unreturned messages alarm function is available for monitoring the integrity of the communication ring by tracking the rate of unreturned messages. This function counts all the outgoing messages and a separate counter adds the messages have failed to return. When the unreturned messages counter reaches the user-definable level specified by the **UNRET MSGS ALARM CH1 THRESHOLD** setting and within the user-defined message count **UNRET MSGS ALARM CH1 COUNT**, the DIR IO CH1 UNRET ALM FlexLogic operand is set.

When the total message counter reaches the user-defined maximum specified by the **UNRET MSGS ALARM CH1 MESSAGE COUNT** setting, both the counters reset and the monitoring process is restarted.

Configure the operand to drive an output contact, user-programmable LED, or selected communication-based output. Latching and acknowledging conditions, if required, are programmed accordingly.

The unreturned messages alarm function is available on a per-channel basis and is active only in the ring configuration. The total number of unreturned input and output messages is available as the **ACTUAL VALUES ⇨ STATUS ⇨⇩ DIRECT INPUTS ⇨⇩ UNRETURNED MSG COUNT CH1** actual value.

5.3.18 Teleprotection

SETTINGS ⇨ PRODUCT SETUP ⇨⇩ TELEPROTECTION

■ TELEPROTECTION ■	⇔	TELEPROTECTION FUNCTION: Disabled	Range: Disabled, Enabled
	⇩	NUMBER OF TERMINALS: 2	Range: 2, 3

⇩	**NUMBER OF COMM CHANNELS: 1**	Range: 1, 2
⇩	**LOCAL RELAY ID NUMBER: 0**	Range: 0 to 63 in steps of 1
⇩	**TERMINAL 1 RELAY ID NUMBER: 0**	Range: 0 to 63 in steps of 1
⇧	**TERMINAL 2 RELAY ID NUMBER: 0**	Range: 0 to 63 in steps of 1

SOFTWARE OPTION

This option is available when an Inter-Relay Communications card is specified at the time of ordering. With the option, direct inputs/outputs display by default. When you enable the teleprotection feature, direct I/O is not visible.

Digital teleprotection transfers protection commands between two or three relays in a secure, fast, dependable, and deterministic way. Possible applications are permissive or blocking pilot schemes and direct transfer trip (DTT). Teleprotection can be applied over any analog or digital channels and any communications media, such as direct fiber, copper wires, optical networks, or microwave radio links. A mixture of communication media is possible.

Once teleprotection is enabled and the teleprotection input/outputs are configured, data packets are transmitted continuously every 1/4 cycle (3/8 cycle if using C37.94 modules) from peer-to-peer. Security of communication channel data is achieved by using CRC-32 on the data packet.

NOTE

Teleprotection inputs/outputs and direct inputs/outputs are mutually exclusive. As such, they cannot be used simultaneously. Once teleprotection inputs and outputs are enabled, direct inputs and outputs are blocked, and vice versa.

NUMBER OF TERMINALS — Specifies whether the teleprotection system operates between two peers or three peers.

NUMBER OF CHANNELS — Specifies how many channels are used. If the **NUMBER OF TERMINALS** is "3" (three-terminal system), set the **NUMBER OF CHANNELS** to "2." For a two-terminal system, the **NUMBER OF CHANNELS** can set to "1" or "2" (redundant channels).

LOCAL RELAY ID NUMBER, **TERMINAL 1 RELAY ID NUMBER**, and **TERMINAL 2 RELAY ID NUMBER** — In installations that use multiplexers or modems, it is desirable to ensure that the data used by the relays protecting a given line is from the correct relays. The teleprotection function performs this check by reading the message ID sent by transmitting relays and comparing it to the programmed ID in the receiving relay. This check is also used to block inputs if inadvertently set to loopback mode or data is being received from a wrong relay by checking the ID on a received channel. If an incorrect ID is found on a channel during normal operation, the TELEPROT CH1 ID FAIL or TELEPROT CH2 ID FAIL FlexLogic operand is set, driving the event with the same name and blocking the teleprotection inputs. For commissioning purposes, the result of channel identification is also shown in the **STATUS ⇨⇩ CHANNEL TESTS ⇨⇩ VALIDITY OF CHANNEL CONFIGURATION** actual value. The default value of "0" for the **LOCAL RELAY ID NUMBER** indicates that relay ID is not to be checked. On two- terminals two-channel systems, the same **LOCAL RELAY ID NUMBER** is transmitted over both channels; as such, only the **TERMINAL 1 ID NUMBER** has to be programmed on the receiving end.

5.3.19 Installation

SETTINGS ⇨ PRODUCT SETUP ⇨⇩ INSTALLATION

■ **INSTALLATION** ■	⇔	**RELAY SETTINGS: Not Programmed**	Range: Not Programmed, Programmed
	⇧	**RELAY NAME: Relay-1**	Range: up to 20 alphanumeric characters

RELAY SETTINGS — To safeguard against the installation of a relay without any entered settings, the unit does not allow signaling of any output relay until **RELAY SETTINGS** is set to "Programmed." This setting is "Not Programmed" by default. The UNIT NOT PROGRAMMED self-test error message displays until the relay is put into the "Programmed" state.

RELAY NAME — This setting allows the user to uniquely identify a relay. This name appears on generated reports.

5.4 Remote resources

5.4.1 Remote resources configuration

When the C70 is ordered with a process card module as a part of HardFiber system, an additional **Remote Resources** menu tree is available in the EnerVista software to allow configuration of the HardFiber system.

Figure 5-66: Remote Resources configuration menu

5

The remote resources settings configure a C70 with a Process Bus Module to work with HardFiber Bricks. Remote resources configuration is only available through the EnerVista software, and is not available through the C70 front panel. A Brick provides eight AC measurements, along with contact inputs, DC analog inputs, and contact outputs, to be the remote interface to field equipment such as circuit breakers and transformers. The C70 with a Process Bus Module has access to all of the capabilities of up to eight Bricks. Remote resources settings configure the point-to-point connection between specific fiber optic ports on the C70 process card and specific Brick. The relay is then configured to measure specific currents, voltages and contact inputs from those Bricks, and to control specific outputs.

The configuration process for remote resources is straightforward and consists of the following steps.

- Configure the field units. This establishes the point-to-point connection between a specific port on the relay Process Bus Module, and a specific digital core on a specific Brick. This is a necessary first step in configuring a process bus relay.
- Configure the AC banks. This sets the primary and secondary quantities and connections for currents and voltages. AC bank configuration also provides a provision for redundant measurements for currents and voltages, a powerful reliability improvement possible with process bus.
- Configure signal sources. This functionality of the C70 has not changed other than the requirement to use currents and voltages established by AC bank configuration under the remote resources menu.
- Configure field contact inputs, field contact outputs, RTDs, and transducers as required for the application's functionality. These inputs and outputs are the physical interface to circuit breakers, transformers, and other equipment. They replace the traditional contact inputs and outputs located at the relay to virtually eliminate copper wiring.
- Configure shared inputs and outputs as required for the application's functionality. Shared inputs and outputs are distinct binary channels that provide high-speed protection quality signaling between relays through a Brick.

For additional information on how to configure a relay with a Process Bus Module, see the HardFiber Process Bus System Instruction Manual.

5.5 System setup

5.5.1 AC inputs

5.5.1.1 Current banks

SETTINGS ⇨⇩ SYSTEM SETUP ⇨ AC INPUTS ⇨ CURRENT BANK F1(U5)

■ CURRENT BANK F1 ■	⇔	PHASE CT F1 PRIMARY: 1 A	Range: 1 to 65000 A in steps of 1
	⇩	PHASE CT F1 SECONDARY: 1 A	Range: 1 A, 5 A
	⇩	GROUND CT F1 PRIMARY: 1 A	Range: 1 to 65000 A in steps of 1
	⇩	GROUND CT F1 SECONDARY: 1 A	Range: 1 A, 5 A

Six banks of phase and ground CTs can be set, where the current banks are denoted in the following format (X represents the module slot position letter):

Xa, where X = {F, M, U} and a = {1, 5}

See the Introduction to AC Sources section at the beginning of this chapter for details.

These settings are critical for all features that have settings dependent on current measurements. When the relay is ordered, the CT module must be specified to include a standard or sensitive ground input. As the phase CTs are connected in wye (star), the calculated phasor sum of the three phase currents (IA + IB + IC = neutral current = 3Io) is used as the input for the neutral overcurrent elements. In addition, a zero-sequence (core balance) CT which senses current in all of the circuit primary conductors, or a CT in a neutral grounding conductor can also be used. For this configuration, the ground CT primary rating must be entered. To detect low level ground fault currents, the sensitive ground input can be used. In this case, the sensitive ground CT primary rating must be entered. See chapter 3 for more details on CT connections.

Enter the rated CT primary current values. For both 1000:5 and 1000:1 CTs, the entry would be 1000. For correct operation, the CT secondary rating must match the setting (which must also correspond to the specific CT connections used).

The following example illustrates how multiple CT inputs (current banks) are summed as one source current. Given the following current banks:

- F1: CT bank with 500:1 ratio
- F5: CT bank with 1000:1 ratio
- M1: CT bank with 800:1 ratio

The following rule applies:

$$SRC\ 1 = F1 + F5 + M1 \qquad \textbf{Eq. 5-6}$$

1 pu is the highest primary current. In this case, 1000 is entered and the secondary current from the 500:1 and 800:1 ratio CTs are adjusted to that created by a 1000:1 CT before summation. If a protection element is set up to act on SRC 1 currents, then a pickup level of 1 pu operates on 1000 A primary.

The same rule applies for current sums from CTs with different secondary taps (5 A and 1 A).

5.5.1.2 Voltage banks

SETTINGS ⇨⇩ SYSTEM SETUP ⇨ AC INPUTS ⇨⇩ VOLTAGE BANK F5(U5)

■ VOLTAGE BANK F5 ■	⇔	PHASE VT F5 CONNECTION: Wye	Range: Wye, Delta
	⇩	PHASE VT F5 SECONDARY: 66.4 V	Range: 25.0 to 240.0 V in steps of 0.1

⇕	**PHASE VT F5 RATIO: 1.00 :1**	Range: 1.00 to 24000.00 in steps of 0.01
⇕	**AUXILIARY VT F5 CONNECTION: Vag**	Range: Vn, Vag, Vbg, Vcg, Vab, Vbc, Vca
⇕	**AUXILIARY VT F5 SECONDARY: 66.4 V**	Range: 25.0 to 240.0 V in steps of 0.1
⇧	**AUXILIARY VT F5 RATIO: 1.00 :1**	Range: 1.00 to 24000.00 in steps of 0.01

Three bank of phase/auxiliary VTs can be set, where voltage banks are denoted in the following format (X represents the module slot position letter):

Xa, where X = {F, M, U} and a = {5}

See the Introduction to AC Sources section at the beginning of this chapter for details.

With VTs installed, the relay can perform voltage measurements as well as power calculations. Enter the **PHASE VT F5 CONNECTION** made to the system as "Wye" or "Delta." An open-delta source VT connection is entered as "Delta."

NOTE

The nominal **PHASE VT F5 SECONDARY** voltage setting is the voltage across the relay input terminals when nominal voltage is applied to the VT primary.

For example, on a system with a 13.8 kV nominal primary voltage and with a 14400:120 volt VT in a delta connection, the secondary voltage is 115; that is, (13800 / 14400) × 120. For a wye connection, the voltage value entered must be the phase to neutral voltage, which is 115 / $\sqrt{3}$ = 66.4.

On a 14.4 kV system with a delta connection and a VT primary to secondary turns ratio of 14400:120, the voltage value entered is 120; that is, 14400 / 120.

5

NOTE

If the **PHASE VT F5 CONNECTION** is set to "Delta", the relay does not calculate voltage harmonics.

5.5.2 Power system

SETTINGS ⇨⇩ SYSTEM SETUP ⇨⇩ POWER SYSTEM

■ **POWER SYSTEM** ■	⇔	**NOMINAL FREQUENCY: 60 Hz**	Range: 25 to 60 Hz in steps of 1
	⇕	**PHASE ROTATION: ABC**	Range: ABC, ACB
	⇕	**FREQUENCY AND PHASE REFERENCE: SRC 1**	Range: SRC 1, SRC 2, SRC 3, SRC 4, SRC 5, SRC 6
	⇧	**FREQUENCY TRACKING: Enabled**	Range: Disabled, Enabled

The power system **NOMINAL FREQUENCY** value is used as a default to set the digital sampling rate if the system frequency cannot be measured from available signals. This can happen if the signals are not present or are heavily distorted. Before reverting to the nominal frequency, the frequency tracking algorithm holds the last valid frequency measurement for a safe period of time while waiting for the signals to reappear or for the distortions to decay. When using a Process Bus Module and SV streams, the SV streams need to be defaulted before changing this setting, under **Settings > Process Bus Module > SV Stream Config**. After changing the **NOMINAL FREQUENCY**, restart the relay using **Maintenance > Reboot Relay Command**.

The phase sequence of the power system is required to properly calculate sequence components and power parameters. The **PHASE ROTATION** setting matches the power system phase sequence and informs the relay of the actual system phase sequence, either ABC or ACB. CT and VT inputs on the relay, labeled as A, B, and C, must be connected to system phases A, B, and C for correct operation.

The **FREQUENCY AND PHASE REFERENCE** setting determines which signal source is used (and hence which AC signal) for phase angle reference. The AC signal used is prioritized based on the AC inputs configured for the signal source. Phase voltages takes precedence, followed by auxiliary voltage, then phase currents, and finally ground current.

For three phase selection, phase A is used for angle referencing ($V_{ANGLE\ REF} = V_A$), while Clarke transformation of the phase signals is used for frequency metering and tracking ($V_{FREQUENCY} = (2V_A - V_B - V_C) / 3$) for better performance during fault, open pole, and VT and CT fail conditions.

The phase reference and frequency tracking AC signals are selected based upon the source configuration, regardless of whether or not a particular signal is actually applied to the relay.

Phase angle of the reference signal always displays zero degrees and all other phase angles are relative to this signal. If the pre-selected reference signal is not measurable at a given time, the phase angles are not referenced.

The phase angle referencing is done via a phase locked loop, which can synchronize independent UR-series relays if they have the same AC signal reference. This results in very precise correlation of phase angle indications between different UR-series relays.

FREQUENCY TRACKING is set to "Disabled" only in unusual circumstances; consult GE Grid Solutions for special variable-frequency applications.

NOTE

The frequency tracking feature functions only when the C70 is in the "Programmed" mode. If the C70 is "Not Programmed," then metering values are available but can exhibit significant errors.

5.5.3 Signal sources

SETTINGS ⇨⇩ SYSTEM SETUP ⇨⇩ SIGNAL SOURCES ⇨ SOURCE 1(6)

■ SOURCE 1 ■	⇔	SOURCE 1 NAME: SRC 1	Range: up to 20 alphanumeric characters
	⇩	SOURCE 1 PHASE CT: None	Range: None, F1,... up to any 6 CTs. Only Phase CT inputs are displayed.
	⇩	SOURCE 1 GROUND CT: None	Range: None, F1,... up to any 6 CTs. Only Ground CT inputs are displayed.
	⇩	SOURCE 1 PHASE VT: None	Range: None, F5, M1, M5, U5 Only phase voltage inputs are displayed
	⇩	SOURCE 1 AUX VT: None	Range: None, F5, M1, M5, U5 Only auxiliary voltage inputs are displayed
	⇩	SRC 1 ALT PHASE CT: None	Range: None, F1,... up to any 6 CTs
	⇩	SRC 1 ALT GROUND CT: None	Range: None, F1,... up to any 6 CTs
	⇩	SWITCH TO ALT CT: Off	Range: FlexLogic operand
	⇩	SRC 1 ALT PHASE VT: None	Range: None, F5, M1, M5, U5
	⇩	SRC 1 ALT AUX VT: None	Range: None, F5, M1, M5, U5
	⇧	SRC 1 SWITCH ALT VT: Off	Range: FlexLogic operand

Identical menus are available for each source. The "SRC 1" text can be replaced by with a user-defined name appropriate for the associated source.

The first letter in the source identifier represents the module slot position. The number directly following this letter represents either the first bank of four channels (1, 2, 3, 4) called "1" or the second bank of four channels (5, 6, 7, 8) called "5" in a particular CT/VT module. See the Introduction to AC Sources section at the beginning of this chapter for details.

It is possible to select the sum of all CT combinations. The first channel displayed is the CT to which all others are referred. For example, the selection "F1+F5" indicates the sum of each phase from channels "F1" and "F5," scaled to whichever CT has the higher ratio. Selecting "None" hides the associated actual values.

The approach used to configure the AC sources consists of several steps; first step is to specify the information about each CT and VT input. For CT inputs, this is the nominal primary and secondary current. For VTs, this is the connection type, ratio and nominal secondary voltage. Once the inputs have been specified, the configuration for each source is entered, including specifying which CTs are summed together.

5.5.3.1 User selection of AC parameters for comparator elements

CT/VT modules automatically calculate all current and voltage parameters from the available inputs. Users must select the specific input parameters to be measured by every element in the relevant settings menu. The internal design of the element specifies which type of parameter to use and provides a setting for source selection. In elements where the parameter can be either fundamental or RMS magnitude, such as phase time overcurrent, two settings are provided. One setting specifies the source, the second setting selects between fundamental phasor and RMS.

5.5.3.2 AC input actual values

The calculated parameters associated with the configured voltage and current inputs are displayed in the current and voltage sections of actual values. Only the phasor quantities associated with the actual AC physical input channels display here. All parameters contained within a configured source are displayed in the sources section of the actual values.

5.5.3.3 Disturbance detectors (internal)

The disturbance detector (ANSI 50DD) element is a sensitive current disturbance detector that detects any disturbance on the protected system. The 50DD function is used directly in some elements in the relay, for example VT Fuse Failure detector or Fault Report. It can also be used to supervise current-based elements to prevent maloperation as a result of the wrong settings or external CT wiring problem. A disturbance detector is provided for each source.

The 50DD function responds to the changes in magnitude of the sequence currents. The disturbance detector logic is as follows.

Figure 5-67: Disturbance detector logic (example using six sources)

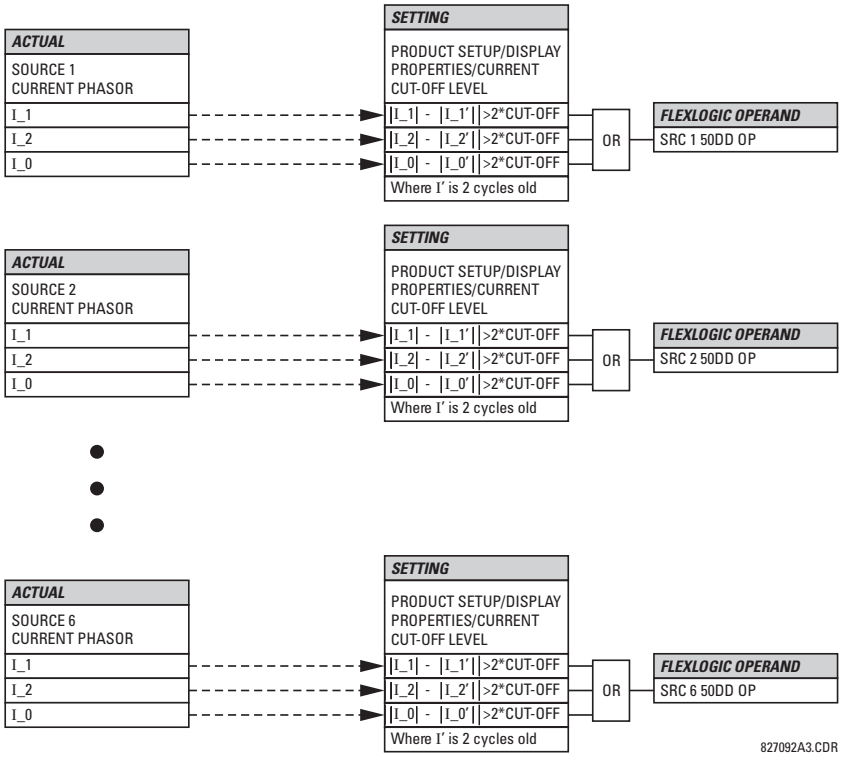

The disturbance detector responds to the change in currents of twice the current cut-off level. The default cut-off threshold is 0.02 pu; thus by default the disturbance detector responds to a change of 0.04 pu. The metering sensitivity setting (**PRODUCT SETUP ⇨⇩ DISPLAY PROPERTIES ⇨⇩ CURRENT CUT-OFF LEVEL**) controls the sensitivity of the disturbance detector accordingly.

5.5.3.4 Example for use of sources

An example of the use of sources is shown in the following figure. A relay can have the following hardware configuration:

	Increasing slot position letter -->		
UR	**CT/VT module 1**	**CT/VT module 2**	**CT/VT module 3**
B30, B90, C70, F35, N60, T35	8 CTs	4 CTs, 4 VTs	4 CTs, 4 VTs
C60, D60, G30, G60, L30, L90, M60, T60	CTs	VTs	not applicable

This configuration can be used on a two-winding transformer, with one winding connected into a breaker-and-a-half system. The following figure shows the arrangement of sources used to provide the functions required in this application, and the CT/VT inputs that are used to provide the data.

Figure 5-68: Example of use of sources

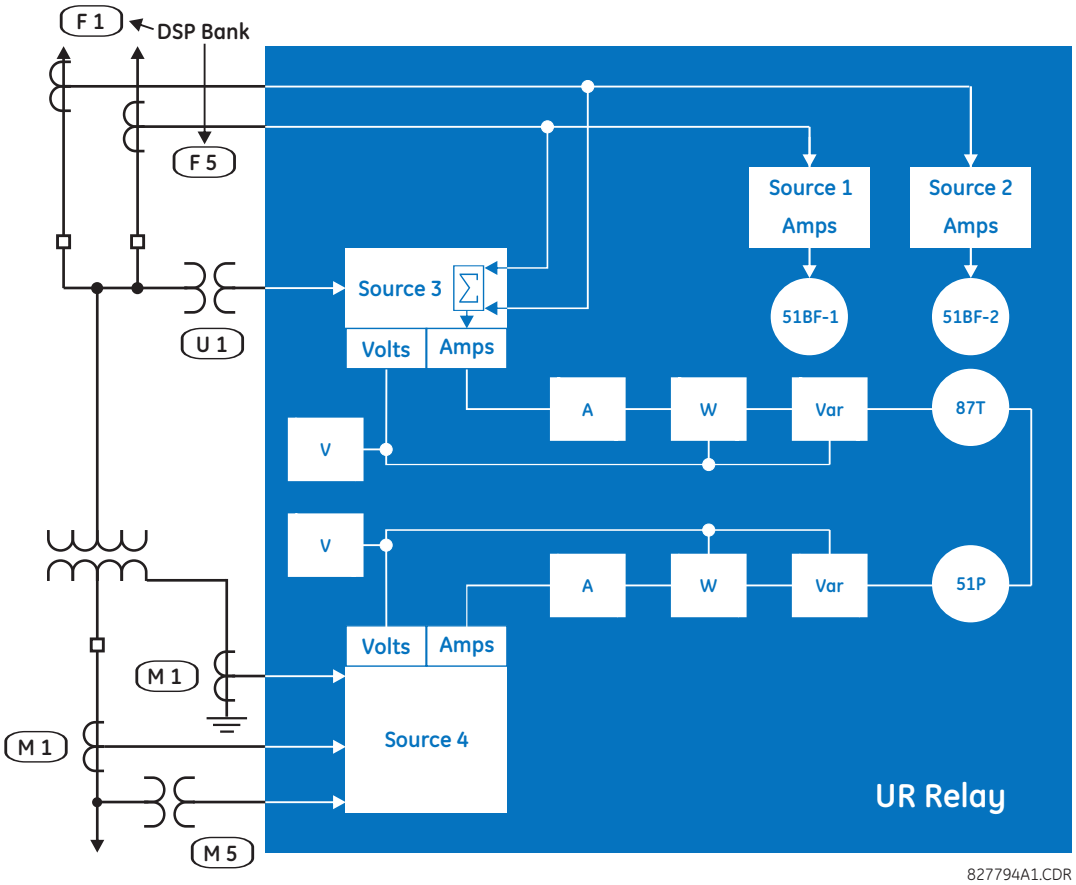

	Y LV	D HV	AUX
	SRC 1	SRC 2	SRC 3
Phase CT	M1	F1+F5	None
Ground CT	M1	None	None
Phase VT	M5	None	None
Aux VT	None	None	U1

5.5.3.5 Source switching

The C70 supports providing current and voltage signals input from both main and alternate CTs and VTs with a user-defined switching between them. This is beneficial in applications, where the C70 can provide protection when main CT or VT are not available due to station re-configuration. Some application examples are shown as follows.

Figure 5-69: Examples of VTs (a) and CTs (b) switching from the main to alternate

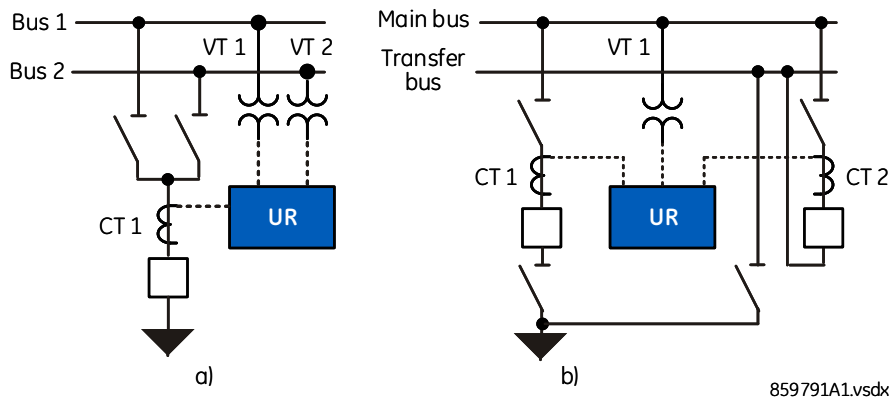

This figure depicts examples of VT switching from VT1 to VT2 when Bus 1 is de-energized, and the line is energized via Bus 2. CT switching example (b) depicts connecting bus transfer breaker CT to the line relay when main line breaker is taken for maintenance and the line is energized via transfer bus, in this case the UR senses current from either CT 1 when line is energized via main line breaker or via CT 2 when the line is energized via transfer bus breaker.

Figure 5-70: Logic diagram of switching CTs and VTs from the main to alternate banks

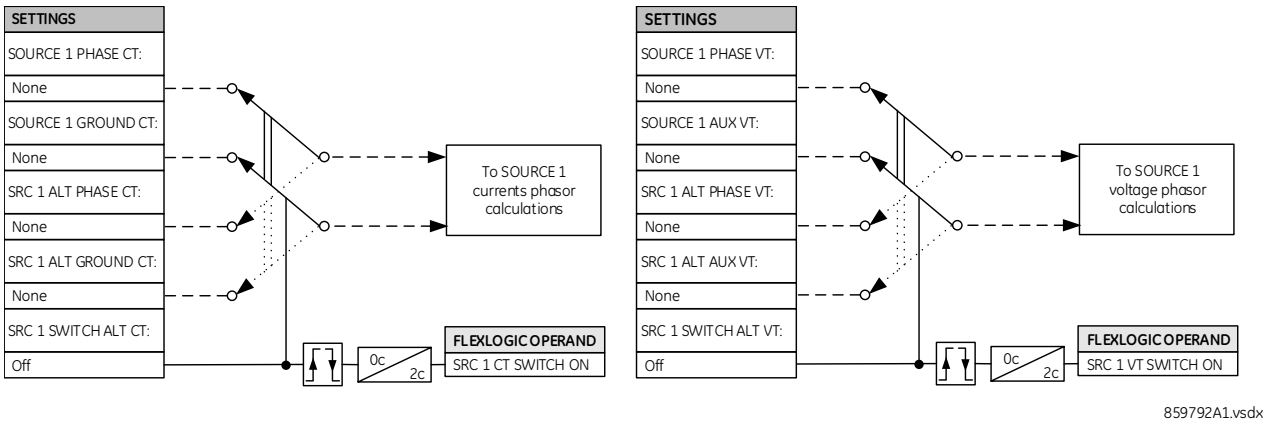

When a FlexLogic operand assigned to **SRC 1 SWITCH ALT CT/VT** is logical "0," the analog data is processed from the main CT and VT analog data banks. When this operand is logical "1," the analog data is processed from the alternate CT and VT analog data banks.

Note that

- Banks assigned to the same function for the main and alternate input data have to have the same CTs and VTs nominals and connections, otherwise a warning is generated and switching functionality is prohibited. For example, banks assigned to the PHASE CT and ALT PHASE CT have to have same primary and secondary CT values. Ground CT input has to be same type (cannot be one regular and another sensitive ground CT input).
- During switching from the main CT/VT input data to alternate input data and vice versa, all relay functions are blocked for two power cycles and metering data does not update
- CT bank switching is allowed if both main and alternate CT banks have the exact same combination for CTs summation
- When it is required that switching state from the main to alternate be memorized in case of C70 restart or when the switching signal is a pulse by nature, such as a pushbutton or IEC 61850 GOOSE, use Non-volatile Latches
- Since switching occurs in both the Phase and Ground CT (Phase and Aux VT), it is possible to keep the same set, for example phase bank under both the main source and alternate source, but different set for ground/aux signal

5.5.4 Breakers

SETTINGS ⇨⇩ SYSTEM SETUP ⇨⇩ BREAKERS ⇨ BREAKER 1(3)

■ BREAKER 1 ■	⇔	BREAKER 1 FUNCTION: Disabled	Range: Disabled, Enabled
	⇕	BREAKER 1 NAME: Bkr 1	Range: up to six alphanumeric characters
	⇕	BREAKER 1 MODE: 3-Pole	Range: 3-Pole, 1-Pole
	⇕	BREAKER1 ΦA/3P OPND: Off	Range: FlexLogic operand
	⇕	BREAKER1 ΦA/3P CLSD: Off	Range: FlexLogic operand
	⇕	BREAKER 1 ΦB OPENED: Off	Range: FlexLogic operand
	⇕	BREAKER 1 ΦB CLOSED: Off	Range: FlexLogic operand
	⇕	BREAKER 1 ΦC OPENED: Off	Range: FlexLogic operand
	⇕	BREAKER 1 ΦC CLOSED: Off	Range: FlexLogic operand
	⇕	BREAKER 1 LOCAL: Off	Range: FlexLogic operand Access in EnerVista
	⇕	BREAKER 1 ALARM DELAY: 0.000 s	Range: 0.000 to 65.535 s in steps of 0.001
	⇕	BREAKER 1 EXT ALARM: Off	Range: FlexLogic operand
	⇕	BREAKER 1 RACKED-IN: Off	Range: FlexLogic operand
	⇕	BREAKER 1 OUT OF SV: Off	Range: FlexLogic operand
	⇕	BREAKER 1 OPEN: Off	Range: FlexLogic operand
	⇕	BREAKER 1 CLOSE: Off	Range: FlexLogic operand
	⇕	BREAKER1 PB CONTROL: Off	Range: FlexLogic operand
	⇕	BREAKER1 TOPERATE: 70 ms	Range: 0 to 65535 ms in steps of 1
	⇕	MANUAL CLOSE RECAL1 TIME: 0.000 s	Range: 0.000 to 65.535 s in steps of 0.001
	⇕	BREAKER 1 OPEN SEAL-IN: 0.000 s	Range: 0.000 to 65.535 s in steps of 0.001
	⇕	BREAKER 1 BLK OPEN: Off	Range: FlexLogic operand
	⇕	BREAKER 1 BLK CLOSE: Off	Range: FlexLogic operand
	⇕	BREAKER 1 INTERLOCK OPEN: Off	Range: FlexLogic operand Access in EnerVista

⇕	**BREAKER 1 INTERLOCK CLS: Off**	Range: FlexLogic operand Access in EnerVista
⇕	**BREAKER 1 BYPASS: Disabled**	Range: Disabled, Enabled
⇕	**BREAKER 1 SYNNCCHECK CLS: Off**	Range: FlexLogic operand Access in EnerVista
⇕	**BREAKER 1 TAGGING: Disabled**	Range: Disabled, Enabled
⇕	**BREAKER 1: SUBSTITUTN: Disabled**	Range: Disabled, Enabled
⇧	**BREAKER 1 EVENTS: Disabled**	Range: Disabled, Enabled

The breaker control element contains the auxiliary logic for status and serves as the interface for opening and closing of a circuit breaker from protection, autoreclose, SCADA, or through the front panel interface. The breaker control element can be used to create interlocking functionality. For greater security in determination of the breaker position, both the 52/a and 52/b auxiliary contacts are used with reporting of the discrepancy between them.

To use this element, configure the contact outputs that trip and close the breaker to use FlexLogic operands BREAKER 1 OFF CMD (or BREAKER 1 TRIP A/B/C in the case of single-pole tripping) and BREAKER 1 ON CMD, and configure the breaker control element inputs as described here.

A description of the operation of the breaker control and status monitoring features from the front panel is provided in chapter 4.

The following settings are available for each breaker control element.

BREAKER 1 FUNCTION — This setting enables and disables the operation of the breaker 1 control feature.

BREAKER 1 NAME — Assign a user-defined name (up to six characters) to the breaker. This name is used in flash messages related to breaker 1.

BREAKER 1 MODE — Selects “3-Pole” mode, where all breaker poles are operated simultaneously, or selects “1-Pole” mode where all breaker poles are operated either independently or simultaneously.

BREAKER1 ΦA/3P OPND — Selects an operand, usually a contact input, that is for a normally-closed 52/b status input that creates a logic 1 when the breaker is open. If a separate 52/b contact input is not available, then the inverted 52/a status signal or the inverted **BREAKER 1 CLOSED** status signal can be used.

BREAKER1 ΦA/3P CLSD — Selects an operand, usually a contact input connected to a breaker auxiliary position tracking mechanism. This input is for a normally-open 52/a status input that creates a logic 1 when the breaker is closed. If the **BREAKER 1 MODE** setting is selected as "3-Pole," this setting selects a single 52/a input as the operand used to track the breaker open or closed position. If the mode is selected as "1-Pole," the input mentioned is used to track phase A and the **BREAKER 1 ΦB** and **BREAKER 1 ΦC** settings select operands to track phases B and C, respectively.

BREAKER1 ΦB OPENED — If the mode is selected as three-pole, this setting has no function. If the mode is selected as single-pole, this input is used to track the breaker phase B opened position as outlined for phase A.

BREAKER1 ΦB CLOSED — If the mode is selected as three-pole, this setting has no function. If the mode is selected as single-pole, this input is used to track the breaker phase B closed position as outlined for phase A.

BREAKER1 ΦC OPENED — If the mode is selected as three-pole, this setting has no function. If the mode is selected as single-pole, this input is used to track the breaker phase C opened position as outlined for phase A.

BREAKER1 ΦC CLOSED — If the mode is selected as three-pole, this setting has no function. If the mode is selected as single-pole, this input is used to track the breaker phase C closed position as outlined for phase A.

BREAKER 1 LOCAL — Selects a FlexLogic operand that declares to IEC 61850 services that Breaker 1 is selected for local control. While the operand is asserted, Bkr0XCBR1.Loc.stVal is true and IEC 61850 commands to BkrCSWI1.Pos and Bkr0XCBR1.Pos are not accepted, and a Negative Response (-Rsp) is issued with the REASON CODE of Blocked-byswitching-hierarchy.

BREAKER 1 ALARM DELAY — This setting specifies the delay interval during which a disagreement of status among the pole position tracking operands does not declare a pole disagreement. This allows for non-simultaneous operation of the poles.

If single-pole tripping and reclosing is used, the breaker can trip unsymmetrically for faults. In this case, the minimum alarm delay setting must exceed the maximum time required for fault clearing and reclosing by a suitable margin.

BREAKER 1 EXT ALARM — This setting selects an operand, usually an external contact input connected to a breaker alarm reporting contact. While the selected operand is active, the BREAKER 1 TROUBLE operand is activated.

BREAKER 1 RACKED-IN — This setting selects a contact input to show whether the breaker is racked-in or racked-out. The racked-in or racked-out status is used to indicate dynamically the status of breaker symbol, only applied in the single-line diagram on the graphical front panel. If this setting is set to Off, the racked status is not considered.

BREAKER 1 OUT OF SV — Selects an operand indicating that breaker 1 is out-of-service.

BREAKER 1 OPEN — Selects an operand that when activated, and unless blocked, initiates the Breaker 1 open and individual phase trip commands.

BREAKER 1 CLOSE — Selects an operand that when activated, and unless blocked, initiates the Breaker 1 close commands.

BREAKER 1 PB CONTROL — Local breaker control operations (that is, open/close) are allowed from front panel pushbuttons when the selected operand value is high.

BREAKER 1 TOPERATE — This setting specifies the required interval to overcome transient disagreement between the 52/a and 52/b auxiliary contacts during breaker operation. If transient disagreement still exists after this time has expired, the BREAKER 1 BAD STATUS FlexLogic operand is asserted for alarm or blocking purposes.

MANUAL CLOSE RECAL1 TIME — This setting specifies the seal-in time of the close commands due to an operator-initiated manual close command to the circuit breaker.

BREAKER 1 OPEN SEAL-IN — This setting specifies the seal-in time of the three-pole open command initiated by either the Trip Out element or a manual open command to the circuit breaker.

BREAKER 1 BLK OPEN — Selects an operand that prevents initiation of Breaker 1 open and individual phase trip commands. This setting can be used for blocking circuit breaker tripping for instance when breaker monitoring detects conditions such as low SF_6 gas density during which breaker opening can cause damage.

BREAKER 1 BLK CLOSE — Selects an operand that prevents initiation of Breaker 1 close commands. This setting can be used for blocking circuit breaker closing, for instance to prevent closing into a closed ground switch.

BREAKER 1 INTERLOCK OPN — This setting is used to select a FlexLogic operand that declares to IEC 61850 services that interlocking conditions are not acceptable for opening Breaker 1. While the selected operand is asserted, the value of BkrCILO.EnaOpn.stVal is true. If a SelectWithValue or Operate service with ctlVal false and with Check.Interlock-check true is requested of either BkrCSWI1.Pos or Bkr0XCBR1.Pos, and the selected operand is not activated, a Negative Response (-Rsp) is issued with the REASON CODE of Blocked-by-interlocking.

BREAKER 1 INTERLOCK CLS — This setting is used to select a FlexLogic operand that declares to IEC 61850 services that interlocking conditions are not acceptable for closing Breaker 1. While the selected operand is asserted, the value of BkrCILO.EnaCls.stVal is true. If a SelectWithValue or Operate service with ctlVal true and with Check.Interlock-check true is requested of either BkrCSWI1.Pos or Bkr0XCBR1.Pos and the selected operand is not activated, a Negative Response (-Rsp) is issued with the REASON CODE of Blocked-by-interlocking.

BREAKER 1 BYPASS — Set to "Enable" to allow the graphical front panel to bypass breaker 1 interlocking. When asserted, **BREAKER 1 BLK OPEN** and **BREAKER 1 BLK CLOSE** settings are bypassed.

BREAKER 1 SYNNCCHECK CLS — Selects a FlexLogic operand that declares to IEC 61850 services that synchrocheck conditions are acceptable for closing breaker 1. If a SelectWithValue or Operate service with ctlVal true and with Check.SynchroCheck true is requested of either BkrCSWI1.Pos or Bkr0XCBR1.Pos and the selected operand is not asserted, a Negative Response (-Rsp) is issued with the REASON CODE of Blocked-by-synchrocheck.

BREAKER 1 TAGGING — Set to "Enable" to allow the graphical front panel to tag breaker 1. When tagged, the following operations are disabled: pushbutton open/close, IEC 61850 open/close, and close command initiated by **BREAKER 1 CLOSE** setting. The trip command issued by the Trip Out element or **BREAKER 1 OPEN** setting is not affected.

BREAKER1 SUBSTITUTN — Set to "Enable" to allow the graphical front panel to substitute breaker 1 status. When substituted, breaker 1 control open/close status is forced to the substituted value.

NOTE

IEC 61850 functionality is permitted when the C70 device is in "Programmed" mode and not in local control mode.

Figure 5-71: Dual breaker control logic (Sheet 1 of 3)

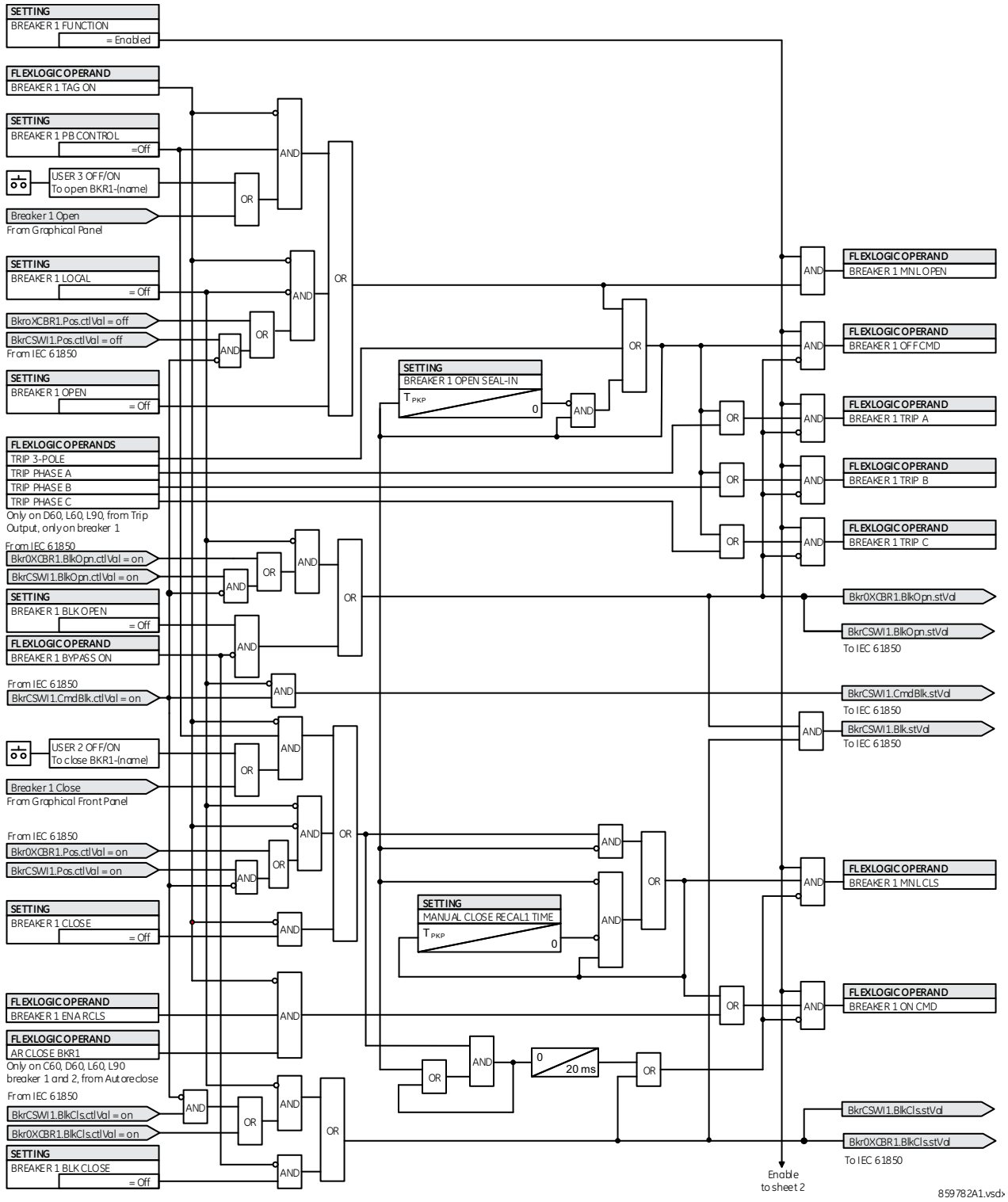

Figure 5-72: Dual breaker control logic (Sheet 2 of 3)

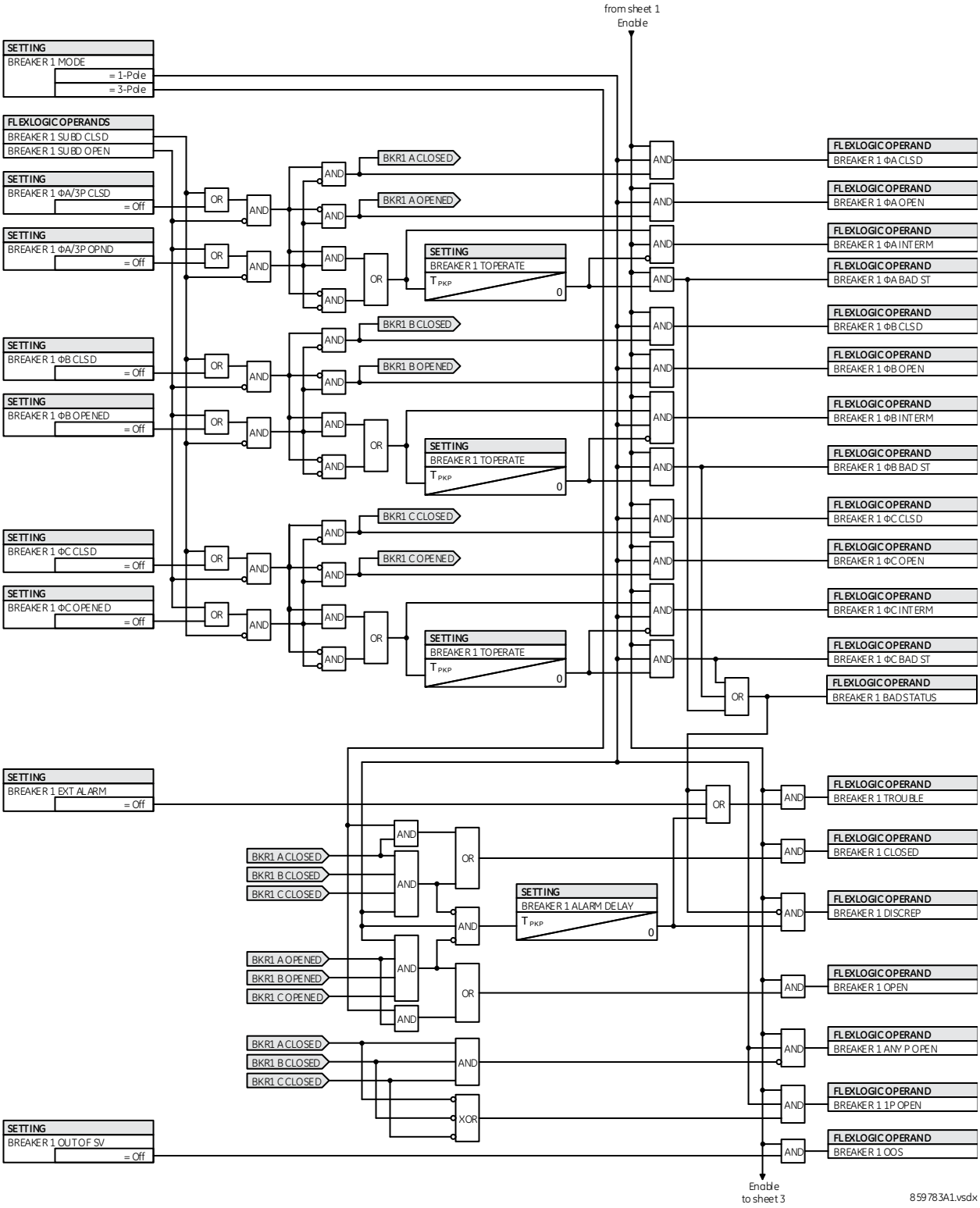

Figure 5-73: Dual breaker / graphical front panel control logic (Sheet 3 of 3)

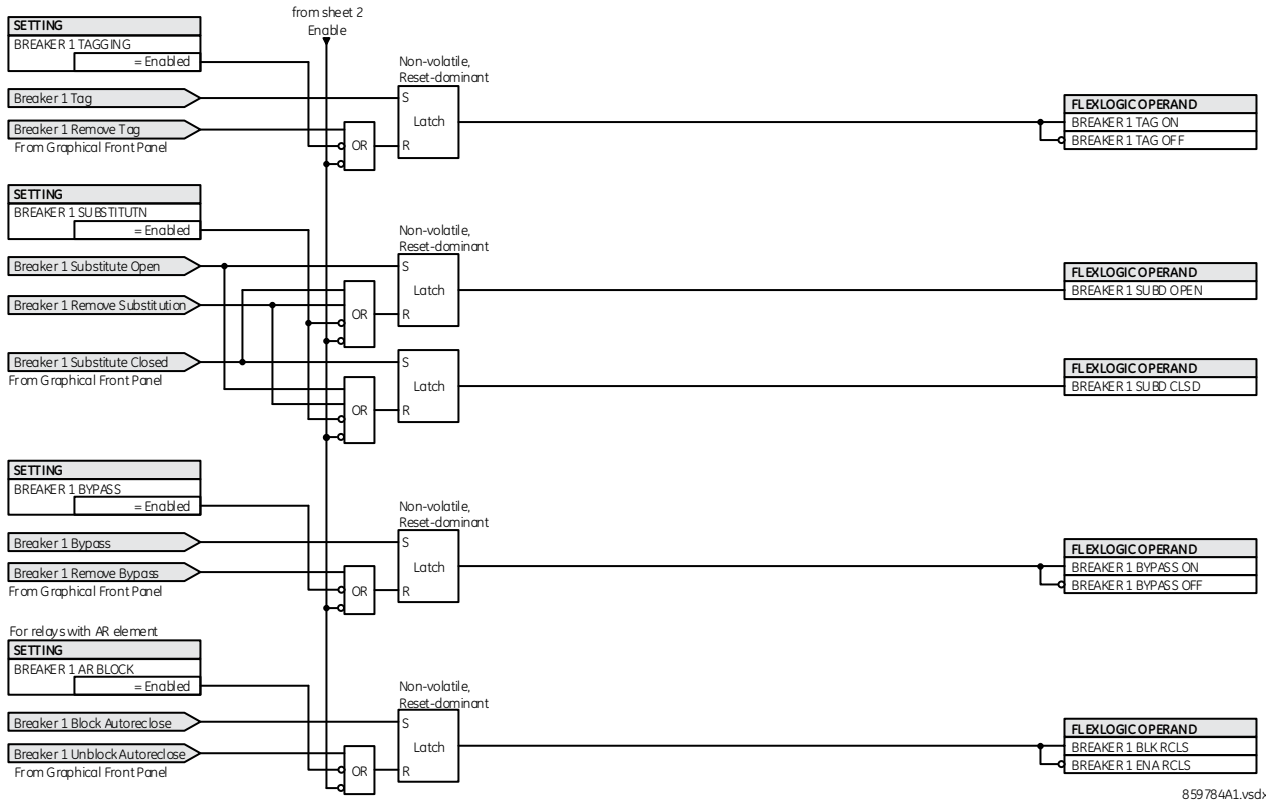

The breaker element has direct hard-coded connections to the IEC 61850 model as shown in the logic diagram. This allows remote open/close operation of each breaker, using either CSWI or XCBR IEC 61850 logical nodes. IEC 61850 select-before-operate functionality, local/remote switch functionality, along with blocking of open/close commands are provided. Note that the dwell time for the IEC 61850 trip and close commands shown is one protection pass only. To maintain the close/open command for a certain time, do so by setting the seal-in timers **BREAKER 1 OPEN SEAL-IN** and **MANUAL CLOSE RECAL1 TIME**, on the contact outputs using the "Seal-in" setting, in the Trip Output element, and/or in FlexLogic.

5.5.5 Disconnect switch control

SETTINGS ⇨⇩ SYSTEM SETUP ⇨⇩ SWITCHES ⇨⇩ SWITCH 1(12)

■ SWITCH 1 ■	⇔	**SWITCH 1 FUNCTION: Disabled**	Range: Disabled, Enabled
	⇩	**SWITCH 1 NAME: SW 1**	Range: up to six alphanumeric characters
	⇩	**SWITCH 1 MODE: 3-Pole**	Range: 3-Pole, 1-Pole
	⇩	**SWTCH 1 ΦA/3P OPND: Off**	Range: FlexLogic operand
	⇩	**SWTCH 1 ΦA/3P CLSD: Off**	Range: FlexLogic operand
	⇩	**SWITCH 1 ΦB OPENED: Off**	Range: FlexLogic operand
	⇩	**SWITCH 1 ΦB CLOSED: Off**	Range: FlexLogic operand

SWITCH 1 ΦC OPENED: Off	Range: FlexLogic operand
SWITCH 1 ΦC CLOSED: Off	Range: FlexLogic operand
SWITCH 1 LOCAL: Off	Range: FlexLogic operand Access in EnerVista
SWITCH 1 ALARM DELAY: 0.000 s	Range: 0.000 to 65.535 s in steps of 0.001
SWITCH 1 OPEN: Off	Range: FlexLogic operand
SWITCH 1 CLOSE: Off	Range: FlexLogic operand
SWITCH 1 PB CONTROL: Off	Range: FlexLogic operand
SWITCH 1 TOPERATE: 70 ms	Range: 0 to 65535 ms in steps of 1
SWITCH 1 OPEN SEAL-IN: 0.000 s	Range: 0.000 to 65.535 s in steps of 0.001
SWITCH 1 CLOSE SEAL IN: 0.000 s	Range: 0.000 to 65.535 s in steps of 0.001
SWITCH 1 BLK OPEN: Off	Range: FlexLogic operand
SWITCH 1 BLK CLOSE: Off	Range: FlexLogic operand
SWITCH 1 INTERLOCK OPN: Off	Range: FlexLogic operand Access in EnerVista
SWITCH 1 INTERLOCK CLS: Off	Range: FlexLogic operand Access in EnerVista
SWITCH 1 BYPASS: Disabled	Range: Disabled, Enabled
SWITCH 1 TAGGING: Disabled	Range: Disabled, Enabled
SWITCH 1 SUBSTITUTN: Disabled	Range: Disabled, Enabled
SWITCH 1 EVENTS: Disabled	Range: Disabled, Enabled

The disconnect switch control element contains the auxiliary logic for status and serves as the interface for opening and closing of disconnect switches from SCADA or through the front panel interface. The disconnect switch control element can be used to create interlocking functionality. For greater security in determination of the switch pole position, both the 89/a and 89/b auxiliary contacts are used with reporting of the discrepancy between them.

To use this element, configure the contact outputs that open and close the disconnect switch to use FlexLogic operands SWITCH 1 OFF CMD and SWITCH 1 ON CMD, and configure the disconnect switch control element's inputs as outlined here.

SWITCH 1 FUNCTION — This setting enables and disables operation of the disconnect switch element.

SWITCH 1 NAME — Assign a user-defined name (up to six characters) to the disconnect switch. This name is used in flash messages related to disconnect switch 1.

SWITCH 1 MODE — This setting selects "3-Pole" mode, where disconnect switch poles have a single common auxiliary switch, or "1-Pole" mode where each disconnect switch pole has its own auxiliary switch.

SWTCH 1 ΦA/3P OPND — This setting selects an operand, usually a contact input, that is for a normally-closed 89/b status input that creates a logic 1 when the disconnect switch is open. If a separate 89/b contact input is not available, then an inverted 89/a status signal can be used.

SWTCH 1 ΦA/3P CLSD — This setting selects an operand, usually a contact input connected to a disconnect switch auxiliary position tracking mechanism. This input is for a normally-open 89/a status input that creates a logic 1 when the disconnect switch is closed. If the **SWITCH 1 MODE** setting is selected as "3-Pole," this setting selects a single 89/a input as the operand used to track the disconnect switch open or closed position. If the mode is selected as "1-Pole," the input mentioned is used to track phase A and the **SWITCH 1 ΦB** and **SWITCH 1 ΦC** settings select operands to track phases B and C, respectively.

SWITCH 1 ΦB OPENED — If the mode is selected as three-pole, this setting has no function. If the mode is selected as single-pole, this input is used to track the disconnect switch phase B opened position as outlined for phase A.

SWITCH 1 ΦB CLOSED — If the mode is selected as three-pole, this setting has no function. If the mode is selected as single-pole, this input is used to track the disconnect switch phase B closed position as outlined for phase A.

SWITCH 1 ΦC OPENED — If the mode is selected as three-pole, this setting has no function. If the mode is selected as single-pole, this input is used to track the disconnect switch phase C opened position as outlined for phase A.

SWITCH 1 ΦC CLOSED — If the mode is selected as three-pole, this setting has no function. If the mode is selected as single-pole, this input is used to track the disconnect switch phase C closed position as outlined for phase A.

SWITCH 1 LOCAL — This setting selects a FlexLogic operand that declares to IEC 61850 services that disconnect switch 1 is selected for local control. While the selected operand is asserted, Disc0XSWI1.Loc.stVal is true and IEC 61850 commands to DiscCSWI1.Pos and Disc0XSWI1.Pos are not accepted, and a Negative Response (-Rsp) is issued with the REASON CODE of Blocked-by-switching-hierarchy.

SWITCH 1 ALARM DELAY — This setting specifies the delay interval during which a disagreement of status among the pole position tracking operands do not declare a pole disagreement. This allows for non-simultaneous operation of the poles.

SWITCH 1 OPEN — This setting selects an operand that when activated, and unless blocked, initiates the disconnect switch 1 open command.

SWITCH 1 CLOSE — This setting selects an operand that when activated, and unless blocked, initiates the disconnect switch 1 close command.

SWITCH 1 PB CONTROL — Local disconnect switch control operations (for example, open/close) are allowed from front panel pushbuttons when the selected FlexLogic operand value is high.

SWITCH 1 TOPERATE — This setting specifies the required interval to overcome transient disagreement between the 89/a and 89/b auxiliary contacts during disconnect switch operation. If transient disagreement still exists after this time has expired, the SWITCH 1 BAD STATUS FlexLogic operand is asserted for alarm or blocking purposes.

SWITCH 1 OPEN SEAL-IN — This setting specifies the seal-in time of the open command due to an operator-initiated manual open command to the disconnect switch.

SWITCH 1 CLOSE SEAL IN — This setting specifies the seal-in time of the close command due to an operator-initiated manual close command to the disconnect switch.

SWITCH 1 BLK OPEN — This setting selects an operand that prevents initiation of the disconnect switch 1 command. This setting can be used to block the disconnect switch from opening, for instance when switchyard monitoring indicates that current exceeding the switch's interrupting rating can be flowing through the switch.

SWITCH 1 BLK CLOSE — This setting selects an operand that prevents initiation of disconnect switch 1 close commands. This setting can be used to block the disconnect switch from closing, for instance to prevent closing into a closed ground switch.

SWITCH 1 INTERLOCK OPN — This setting selects an operand that declares to IEC 61850 services that interlocking conditions are not acceptable for opening disconnect switch 1. While the selected operand is asserted, the value of DiscCILO.EnaOpn.stVal is true. If a SelectWithValue or Operate service with ctlVal false and with Check.Interlock-check true is requested of DiscCSWI1.Pos or Disc0XSWI1.Pos and the selected operand is not activated, a Negative Response (-Rsp) is issued with the REASON CODE of Blocked-by-interlocking.

SWITCH 1 INTERLOCK CLS — This setting selects an operand that declares to IEC 61850 services that interlocking conditions are not acceptable for closing disconnect switch 1. While the selected operand is asserted, the value of DiscCILO.EnaCls.stVal is true. If a SelectWithValue or Operate service with ctlVal true and with Check.Interlock-check true is requested of DiscCSWI1.Pos or Disc0XSWI1.Pos and the selected operand is not activated, a Negative Response (-Rsp) is issued with the REASON CODE of Blocked-by-interlocking.

SWITCH 1 BYPASS —Set to "Enable" to allow the graphical front panel to bypass switch 1 interlocking. When asserted, **SWITCH 1 BLK OPEN** and **SWITCH 1 BLK CLOSE** settings are bypassed.

SWITCH 1 TAGGING — Set to "Enable" to allow the graphical front panel to tag switch 1. When tagged, the following operations are disabled:

- Pushbutton Open/Close
- IEC 61850 Open/Close
- Open command initiated by **SWITCH 1 OPEN** setting
- Close command initiated by **SWITCH 1 CLOSE** setting

SWITCH 1 SUBSTITUTN — Set to "Enable" to allow the graphical front panel to substitute switch 1 status. When substituted, switch 1 control open/close status is forced to the substituted value.

NOTE

IEC 61850 functionality is permitted when the C70 is in “Programmed” mode and not in local control mode.

The switch element has direct hard-coded connections to the IEC 61850 model as shown in the logic diagrams. This allows remote open/close operation of each switch, using either CSWI or XSWI IEC 61850 logical nodes. IEC 61850 select-before-operate functionality, local/remote switch functionality, along with blocking open/close commands are provided. Note that the dwell time for the IEC 61850 trip and close commands shown is one protection pass only. To maintain close/open command for a certain time, do so using the seal-in timers **SWITCH 1 OPEN SEAL-IN** and **SWITCH 1 CLOSE SEAL IN**, on the contact outputs using the "Seal-in" setting, or in FlexLogic.

Figure 5-74: Disconnect switch control logic (sheet 1 of 3)

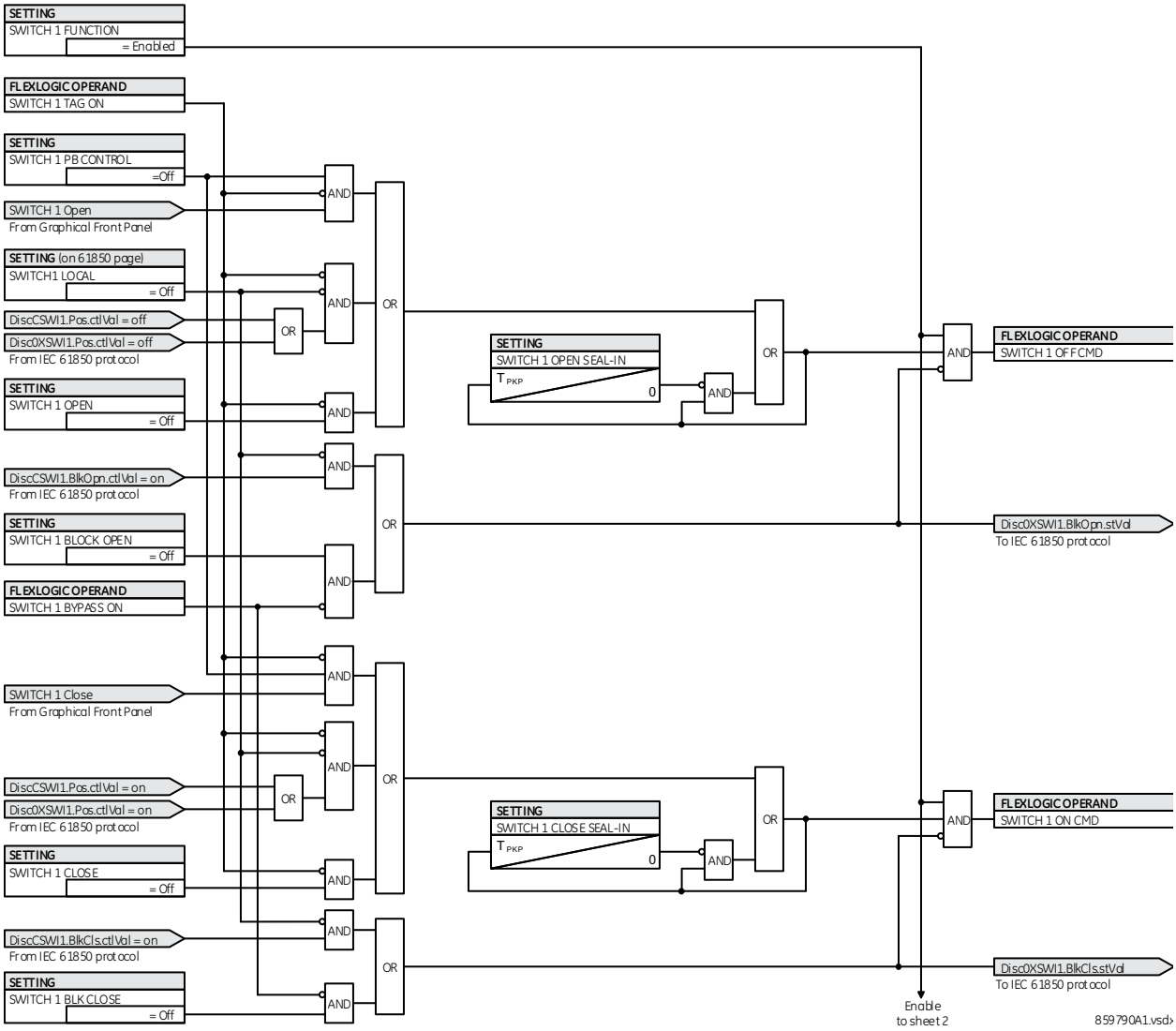

Figure 5-75: Disconnect switch control status logic (sheet 2 of 3)

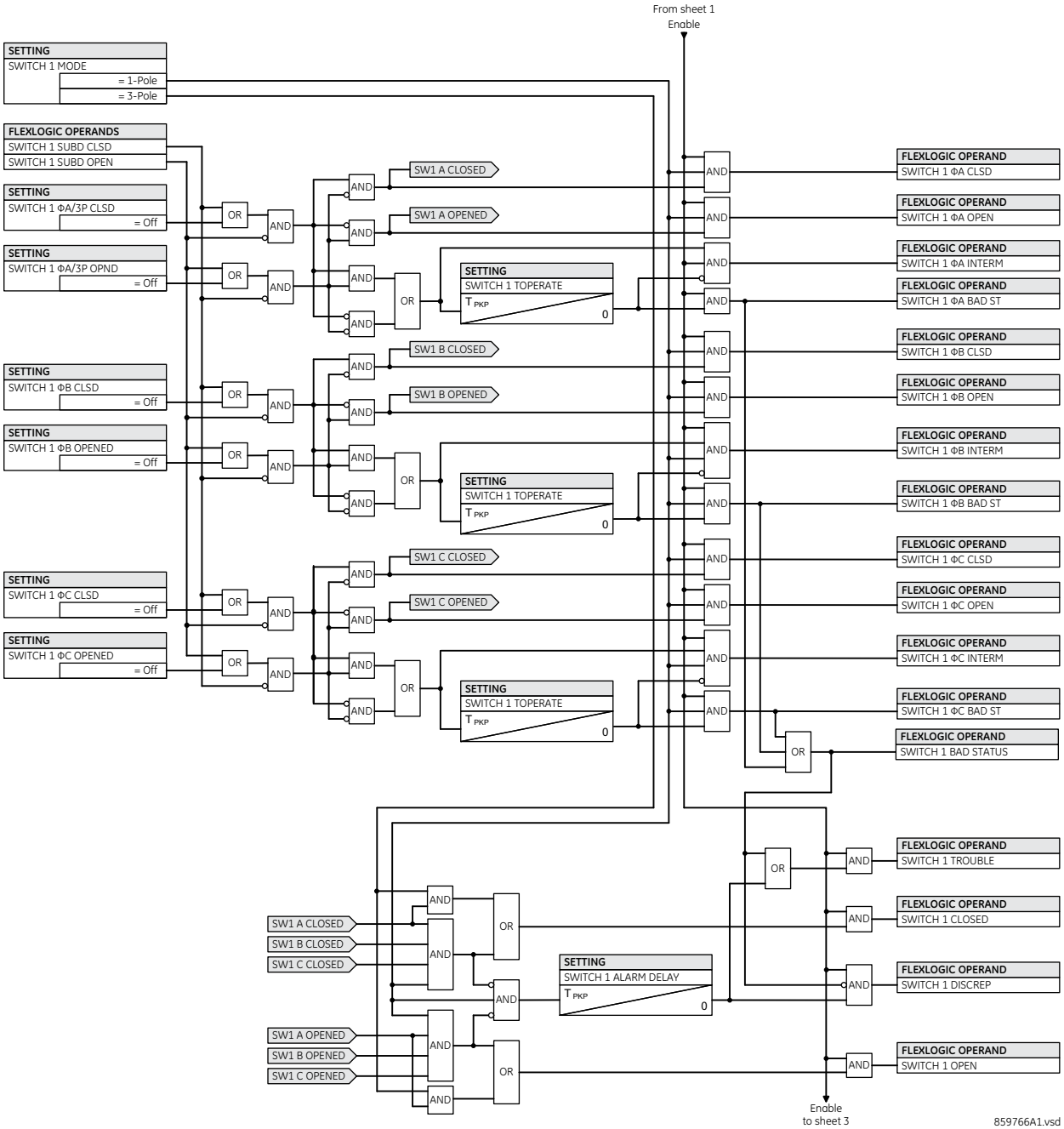

Figure 5-76: Disconnect switch control graphical front panel logic (sheet 3 of 3)

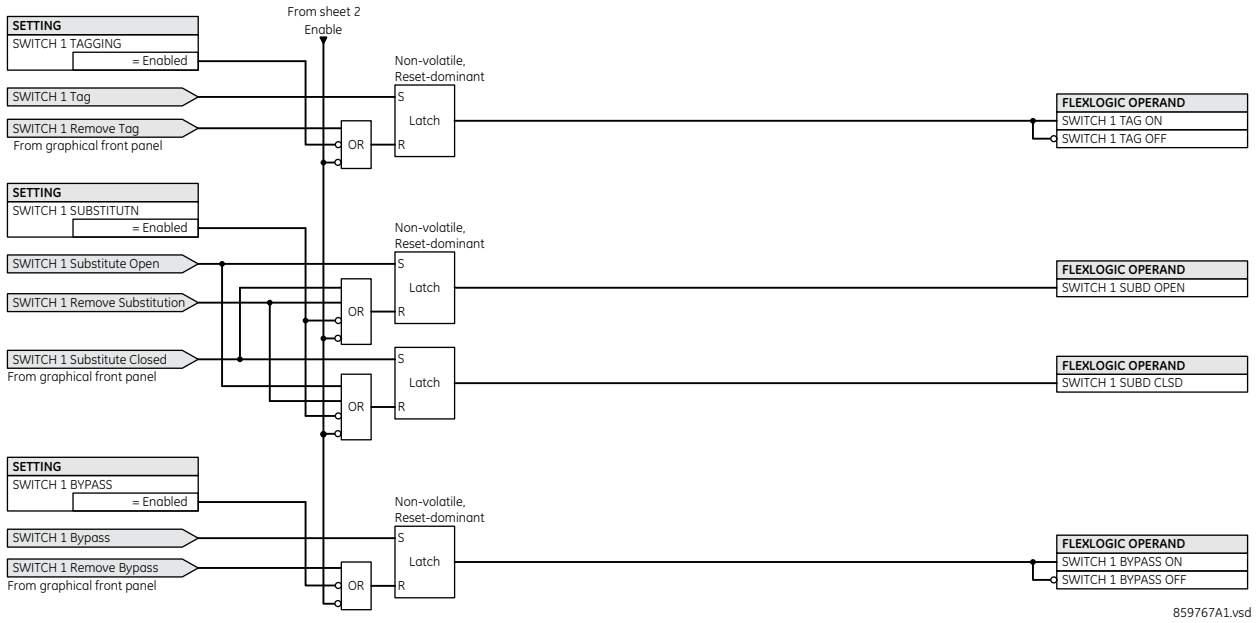

5.5.6 FlexCurves

5.5.6.1 Settings

SETTINGS ⇨⇩ SYSTEM SETUP ⇨⇩ FLEXCURVES ⇨⇩ FLEXCURE A(D)

■ **FLEXCURVE A** ■	⇔	**FLEXCURVE A TIME AT** **0.00 xPKP: 0 ms**	Range: 0 to 65535 ms in steps of 1
	⇩	**FLEXCURVE A TIME AT** **0.05 xPKP: 0 ms**	Range: 0 to 65535 ms in steps of 1
	⇩		
	⇧	**FLEXCURVE A TIME AT** **20.00xPKP: 0 ms**	Range: 0 to 65535 ms in steps of 1

FlexCurves A through D have settings for entering times to reset and operate at the following pickup levels: 0.00 to 0.98 and 1.03 to 20.00. This data is converted into two continuous curves by linear interpolation between data points. To enter a custom FlexCurve, enter the reset and operate times (using the **VALUE** keys) for each selected pickup point (using the **MESSAGE** up/down keys) for the required protection curve (A, B, C, or D).

Table 5-18: FlexCurve table

Reset	Time ms	Reset	Time ms	Operate	Time ms	Operate	Time ms	Operate	Time ms	Operate	Time ms
0.00		0.68		1.03		2.9		4.9		10.5	
0.05		0.70		1.05		3.0		5.0		11.0	
0.10		0.72		1.1		3.1		5.1		11.5	
0.15		0.74		1.2		3.2		5.2		12.0	
0.20		0.76		1.3		3.3		5.3		12.5	
0.25		0.78		1.4		3.4		5.4		13.0	
0.30		0.80		1.5		3.5		5.5		13.5	
0.35		0.82		1.6		3.6		5.6		14.0	
0.40		0.84		1.7		3.7		5.7		14.5	
0.45		0.86		1.8		3.8		5.8		15.0	
0.48		0.88		1.9		3.9		5.9		15.5	
0.50		0.90		2.0		4.0		6.0		16.0	
0.52		0.91		2.1		4.1		6.5		16.5	
0.54		0.92		2.2		4.2		7.0		17.0	
0.56		0.93		2.3		4.3		7.5		17.5	
0.58		0.94		2.4		4.4		8.0		18.0	
0.60		0.95		2.5		4.5		8.5		18.5	
0.62		0.96		2.6		4.6		9.0		19.0	
0.64		0.97		2.7		4.7		9.5		19.5	
0.66		0.98		2.8		4.8		10.0		20.0	

NOTE

The relay using a given FlexCurve applies linear approximation for times between the user-entered points. Take care when setting the two points that are close to the multiple of pickup of 1; that is, 0.98 pu and 1.03 pu. It is recommended to set the two times to a similar value, otherwise the linear approximation can result in undesired behavior for the operating quantity that is close to 1.00 pu.

5.5.6.2 FlexCurve configuration with EnerVista software

The EnerVista software allows for easy configuration and management of FlexCurves and their associated data points. Prospective FlexCurves can be configured from a selection of standard curves to provide the best approximate fit, then specific data points can be edited afterwards. Alternately, curve data can be imported from a specified file (.csv format) by selecting the EnerVista **Import Data From** setting (**Settings > System Setup > FlexCurves > FlexCurve**).

Curves and data can be exported, viewed, and cleared by clicking the appropriate buttons. FlexCurves are customized by editing the operating time (ms) values at pre-defined per-unit current multiples. Note that the pickup multiples start at zero (implying the "reset time"), operating time below pickup, and operating time above pickup.

5.5.6.3 Recloser curve editing

Recloser curve selection is special in that recloser curves can be shaped into a composite curve with a minimum response time and a fixed time above a specified pickup multiples. There are 41 recloser curve types supported. These definite operating times are useful to coordinate operating times, typically at higher currents and where upstream and downstream protective devices have different operating characteristics. The recloser curve configuration window shown here appears when the **Initialize From** setting in the EnerVista software is set to “Recloser Curve” and the **Initialize FlexCurve** button is clicked.

Figure 5-77: Recloser curve initialization

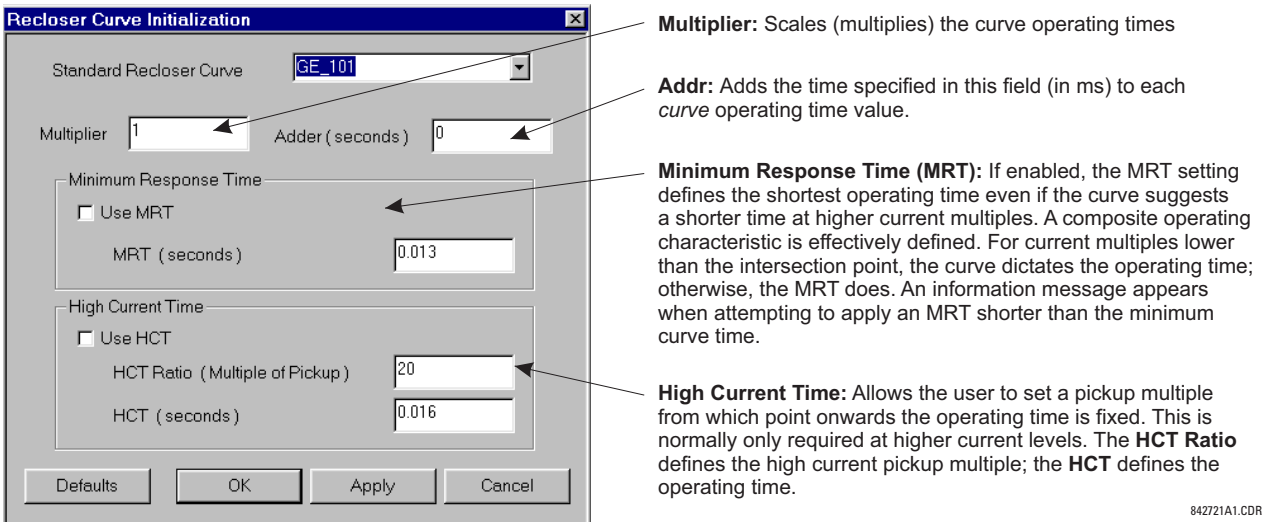

NOTE

The **Multiplier** and **Adder** settings only affect the curve portion of the characteristic and not the MRT and HCT settings. The HCT settings override the MRT settings for multiples of pickup greater than the HCT ratio.

5.5.6.4 Example

A composite curve can be created from the GE_111 standard with MRT = 200 ms and HCT initially disabled and then enabled at eight times pickup with an operating time of 30 ms. At approximately four times pickup, the curve operating time is equal to the MRT and from then onwards the operating time remains at 200 ms.

Figure 5-78: Composite recloser curve with HCT disabled

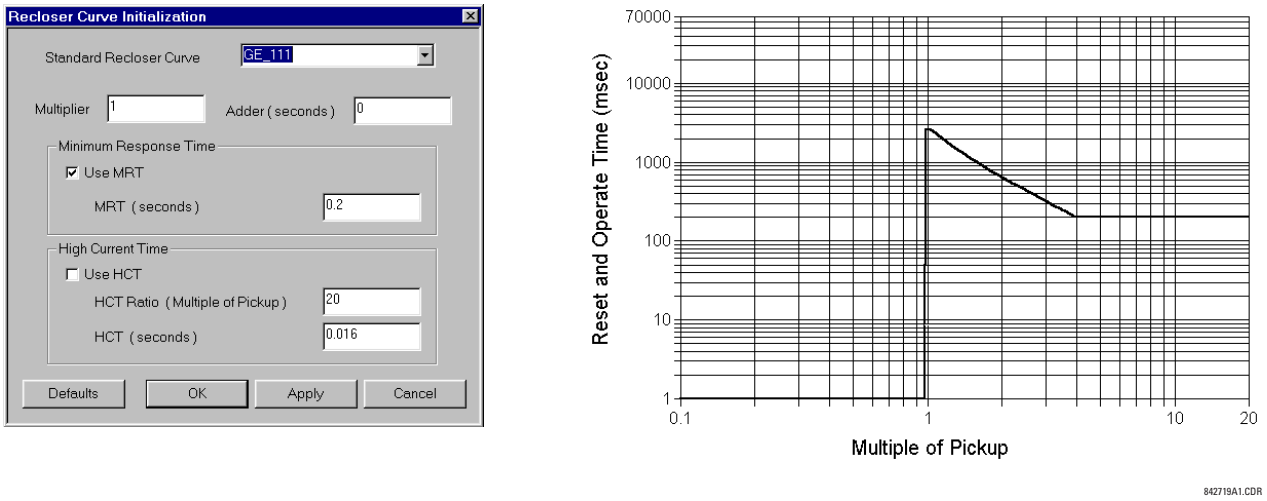

With the HCT feature enabled, the operating time reduces to 30 ms for pickup multiples exceeding eight times pickup.

Figure 5-79: Composite recloser curve with HCT enabled

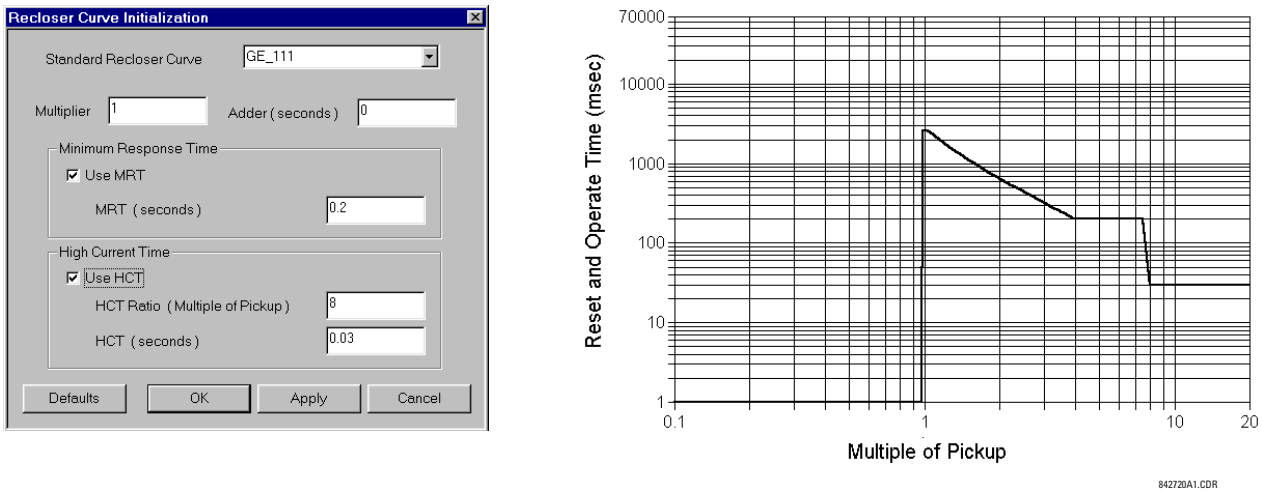

NOTE

Configuring a composite curve with an increase in operating time at increased pickup multiples is not allowed. If this is attempted, the EnerVista software generates an error message and discards the proposed changes.

5.5.6.5 Standard recloser curves

The following graphs display standard recloser curves available for the C70.

Figure 5-80: Recloser curves GE101 to GE106

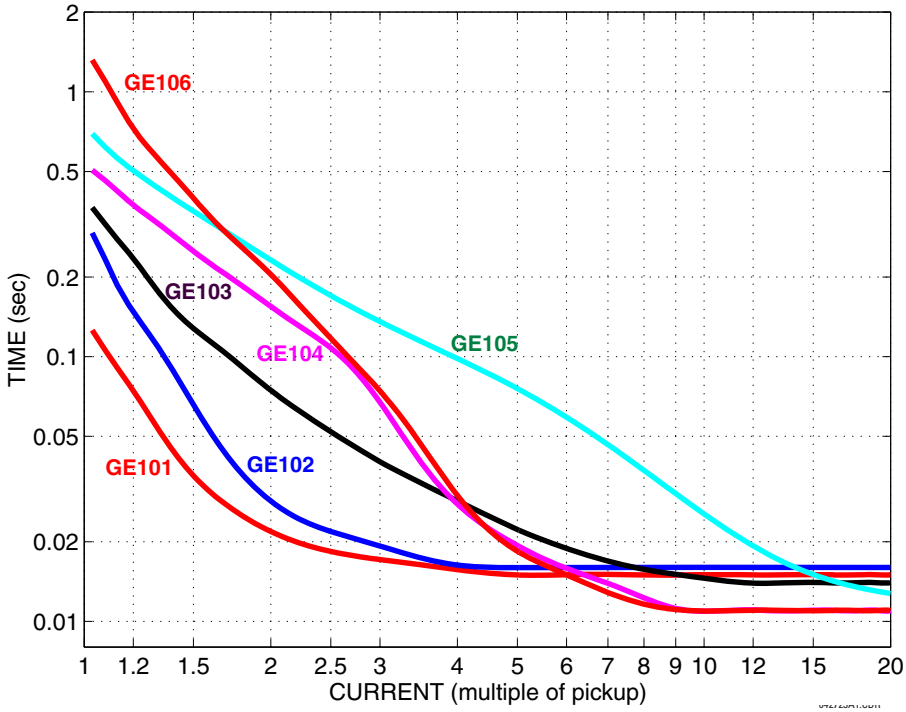

Figure 5-81: Recloser curves GE113, GE120, GE138, and GE142

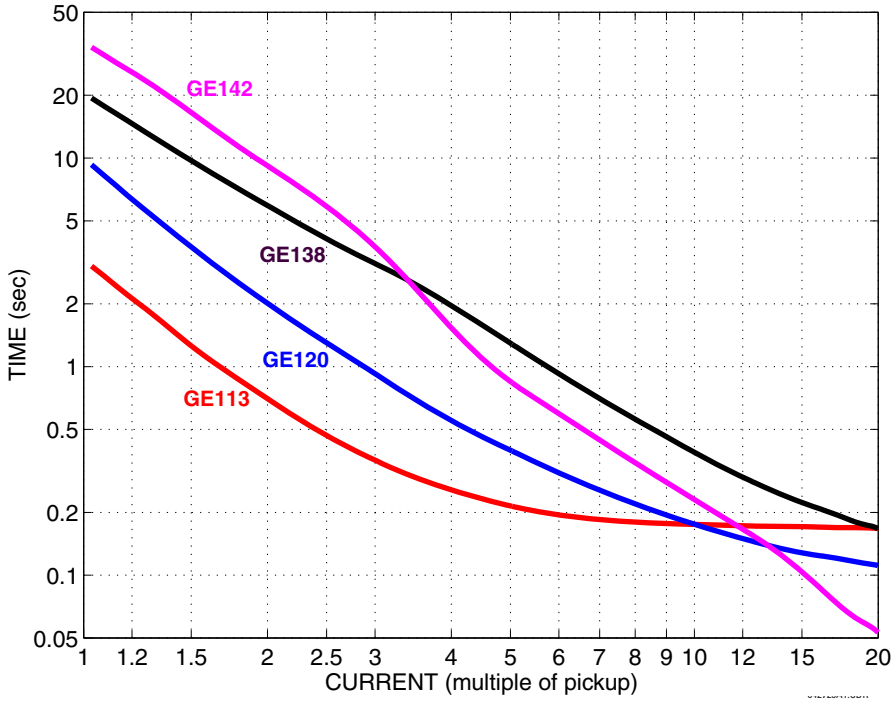

Figure 5-82: Recloser curves GE134, GE137, GE140, GE151, and GE201

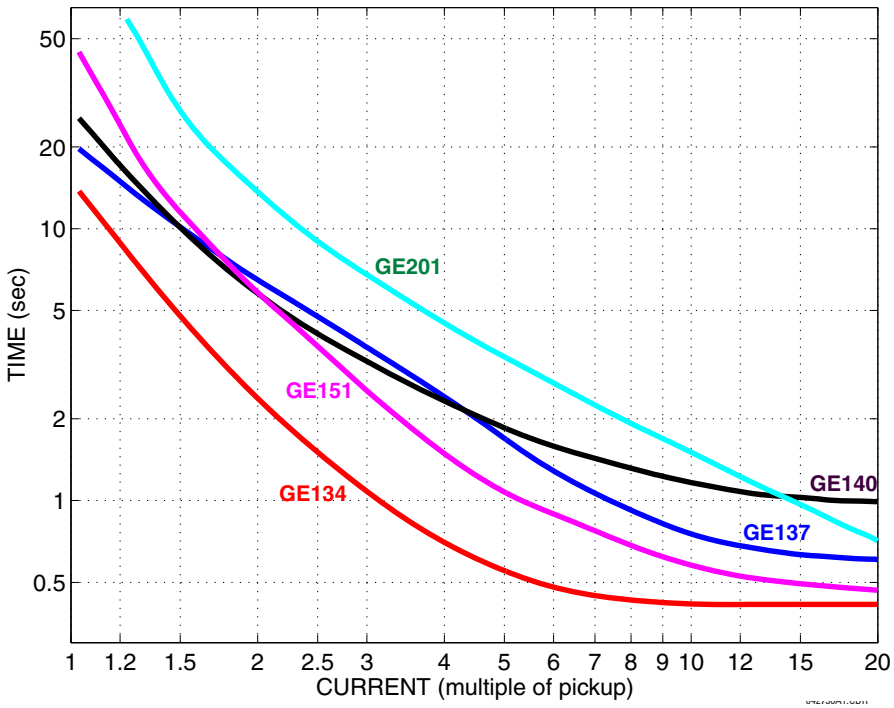

5

Figure 5-83: Recloser curves GE131, GE141, GE152, and GE200

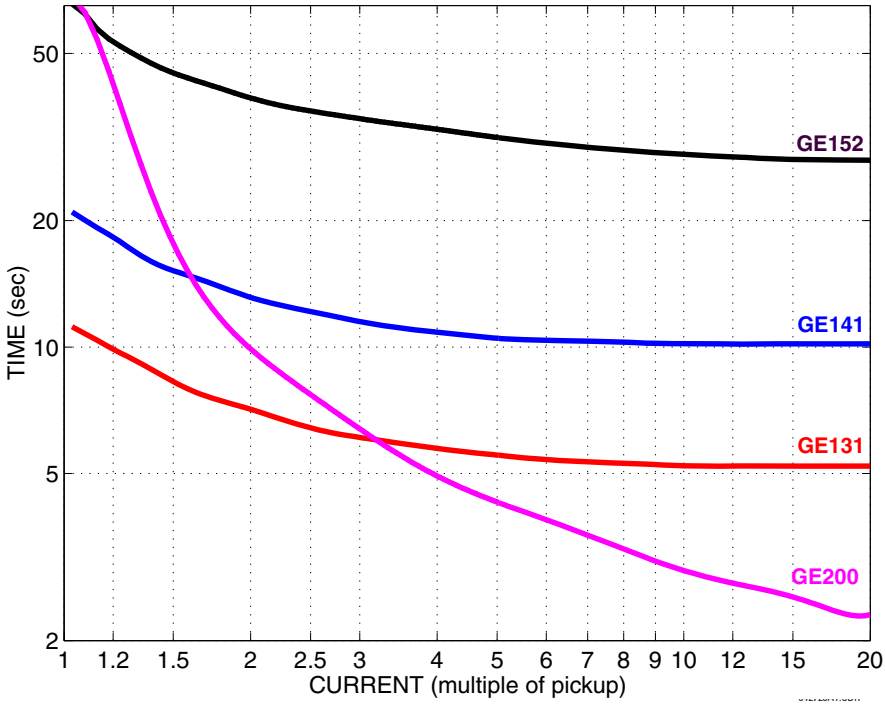

5

Figure 5-84: Recloser curves GE133, GE161, GE162, GE163, GE164, and GE165

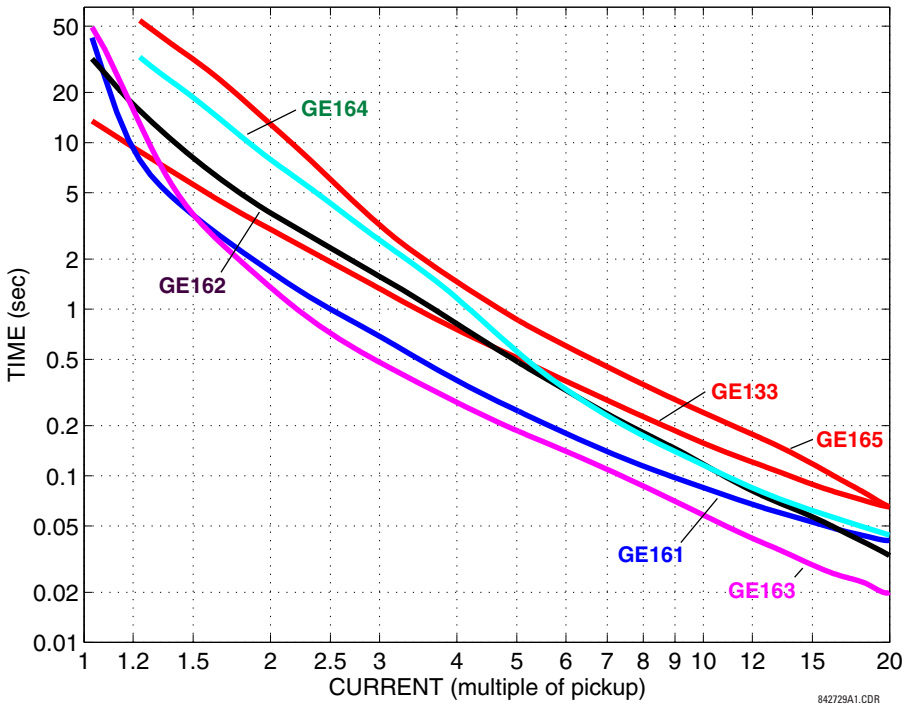

Figure 5-85: Recloser curves GE116, GE117, GE118, GE132, GE136, and GE139

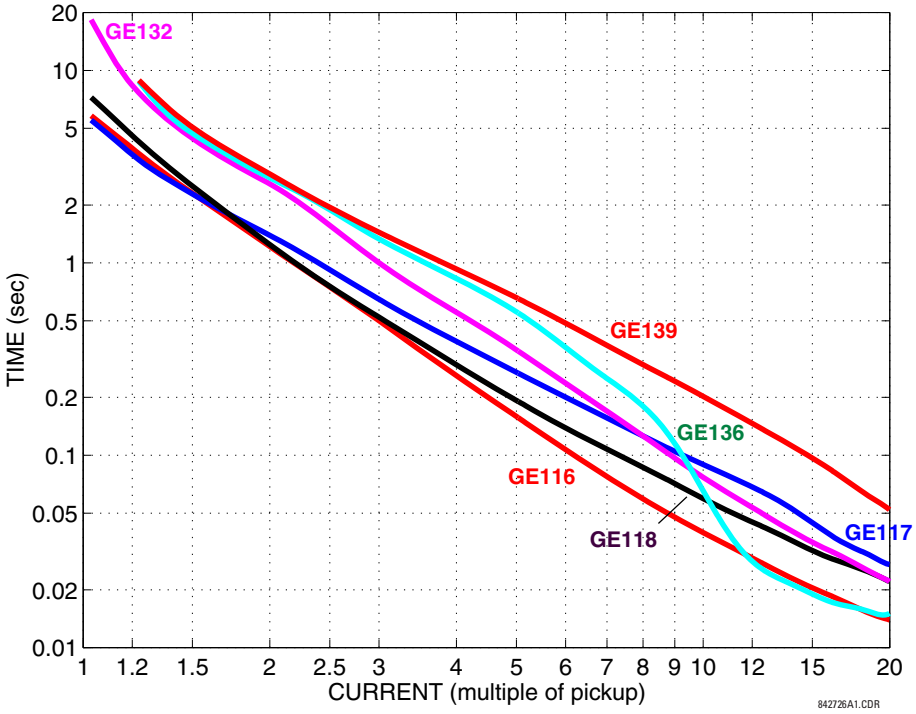

Figure 5-86: Recloser curves GE107, GE111, GE112, GE114, GE115, GE121, and GE122

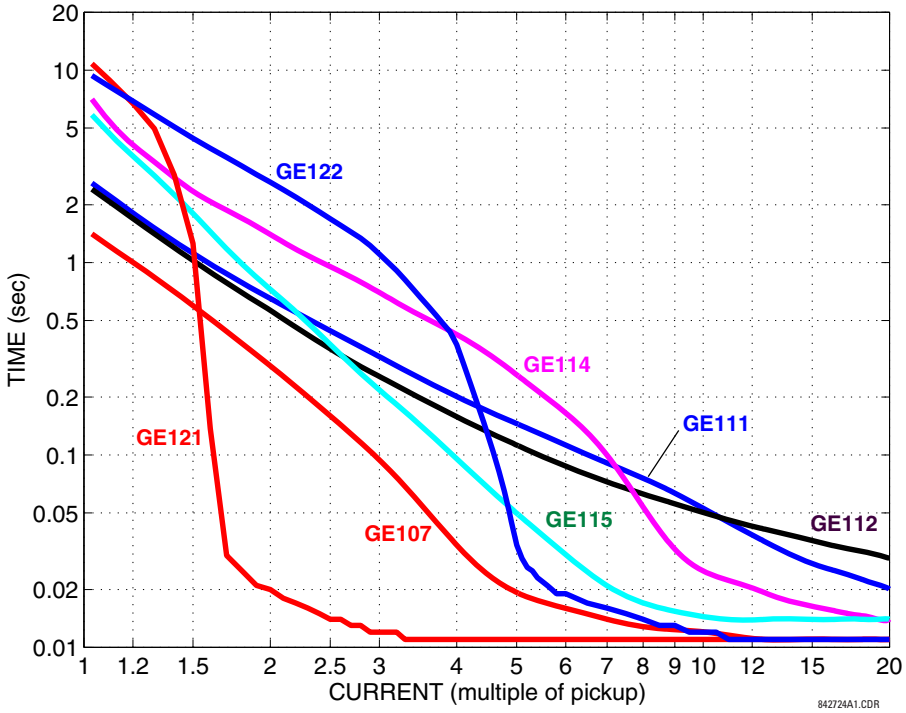

5

Figure 5-87: Recloser curves GE119, GE135, and GE202

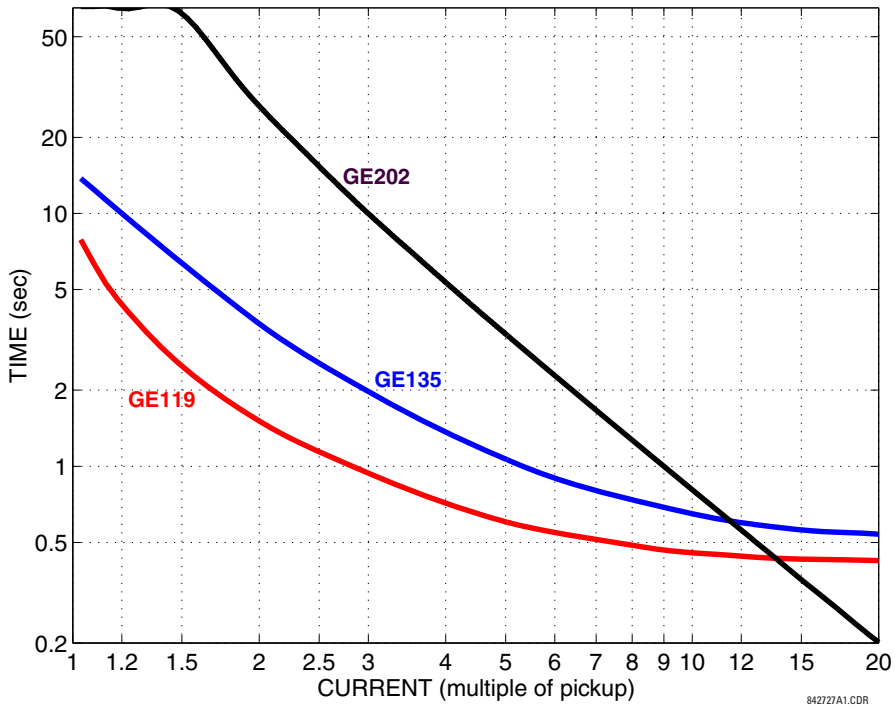

5

5.6 Process Bus Module

SOFTWARE OPTION

This feature requires a Process Bus Module (order code 85, 86, or 87).

Process Bus GOOSE requires IEC 61850, PRP, and IEEE 1588 software options.

The UR provides a digital process bus by use of a Process Bus Module. A digital process bus enables digital transmission of data between the switchyard and relays in a control house using communication cables instead of hard-wired connections.

The Process Bus Module supports the IEC 61850-9-2LE and IEC 61869 protocols, switched networks, and two redundancy protocols (Parallel Redundancy Protocol and High-Availability Seamless Redundancy). The module is used to transfer data streams in protection and control networks, including dataset samples referred to as sampled values (SVs), with the stability of redundancy.

A Process Bus Module with order code 85, 86, or 87 is distinct from the HardFiber Process Bus Module with order code 81. This section does not apply to the HardFiber module.

Configuration includes that for redundancy and synchronization of time-clock sources because data transfer occurs among multiple devices.

5.6.1 Parallel Redundancy Protocol (PRP)

PRP enables seamless switchover and zero recovery time during a single network failure in substation automation networks. It ensures that critical data, such as GOOSE and sampled value (SV) data, are transmitted without delay in case of local area network (LAN) defects. In other words, with PRP functionality, the Process Bus Module can be connected to redundant LANs and work with zero recovery time.

PRP is supported to the IEC 62439-3:2012 standard, Clause 4.

The figure shows that PRP achieves redundancy by using a combination of frame and LAN duplication. Identical frames, here labeled frames A and B, are sent on two independent networks that connect source and destination. The frames carry GOOSE or supervisory data. Under normal circumstances, both frames reach the destination and one of them is sent up the stack to the destination application, while the other frame is discarded. If an error occurs in one of the networks and traffic is prevented from flowing on that path, connectivity is provided by the other network to ensure continuous communication. When designing this network care was taken to ensure that there is no single point of failure in the two LANs, such as a common power supply, as such scenarios can bring down simultaneously both LANs.

Figure 5-88: PRP redundant network example

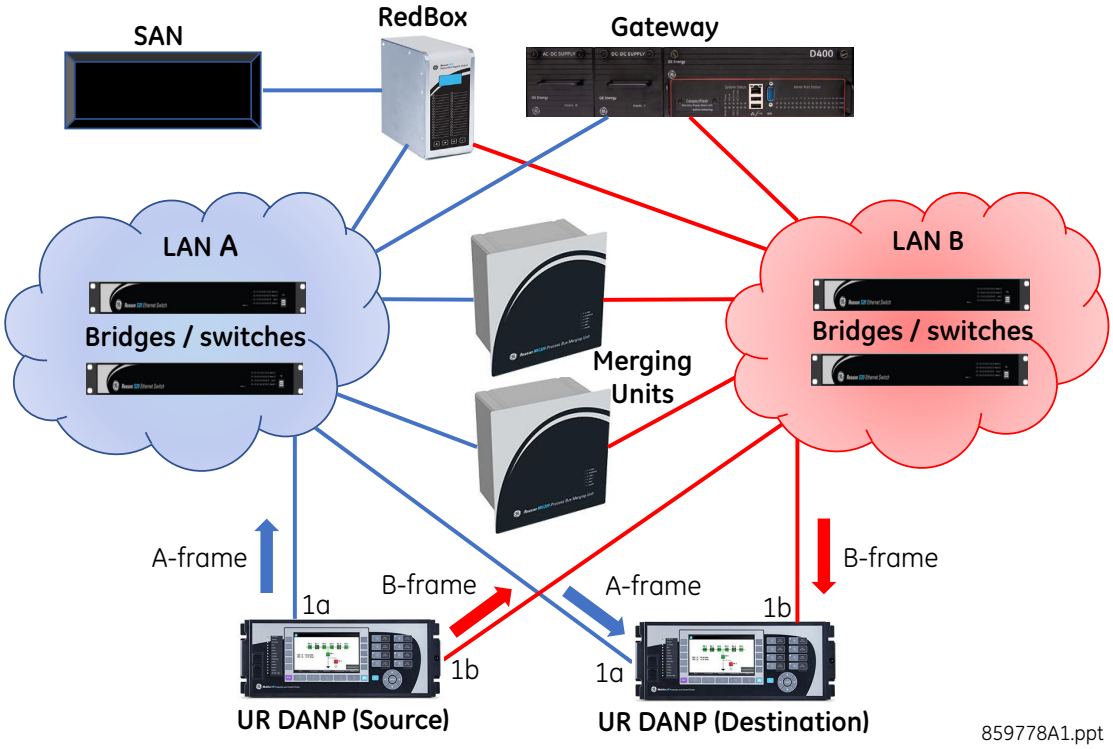

PRP implements redundancy in the nodes rather than in the network by using specialized nodes called Doubly Attached Nodes Running PRP (DANP) for handling the duplicated frames. The figure shows an example. Each DANP node has two ports that are connected to the two independent LANs with similar (but not necessarily identical) topology. A source DANP sends identical frames over both LANs and a destination DANP receives both frames from the two LANs within a certain time period, consumes the first frame, and discards the duplicate frame.

Each UR device in this example implements PRP on ports 1a and 1b of the Process Bus Module. Both URs require a Process Bus Module. Ports 1a and 1b act as DANP in the PRP network. With two ports required, Process Bus Modules with order code 85, 86, or 87 can be used. While this example shows a UR as receiving the frames, the receiver can be a merging unit or UR.

A device with only one port, such as a printer or computer, is called a Singly Attached Node (SAN). It is a node with non-redundant network adapters. A SAN can communicate with other SANs and DANPs on the same LAN. When a SAN is attached to a redundant LAN by a Redundancy Box (RedBox) device, the SAN can communicate with all DANPs and SANs in both LANs. In other words, if redundancy for a SAN is required, the SAN is connected to both LANs through a RedBox.

A merging unit (MU), such as the GE MU320, is an interface between analog and digital worlds. With an MU, the analog signals from the CTs and VTs in the yard are converted to digital signals and transmitted via the sampled value (SV) network communication protocol.

The bridges shown are network switches that connect devices participating in the PRP network and otherwise do not have an active role in PRP.

5.6.2 High-availability seamless redundancy (HSR)

Similar to PRP, High-Availability Seamless Redundancy (HSR) enables seamless switchover and zero recovery time during a single network failure in substation automation networks. It ensures that critical data, such as GOOSE and SV data, are transmitted without delay in case of LAN defects.

HSR is supported to IEC 62439-3, Clause 5. SV data can be received from merging units meeting IEC 61869-9.

HSR is used in network topology with rings and rings of rings. All nodes in the ring are doubly attached. The figure shows an example. The Doubly Attached Node with HSR (DANH) is a node that has two ports interconnected by full-duplex links and participates in the HSR ring. The source node receives a frame from its upper layer, inserts an HSR tag to identify duplicates, and sends it over its two ports in different directions, shown by the red and blue arrows. In a normal, fault-free state, the identical frames reach the destination DANH within a certain interval, the destination DANH removes the HSR tag, sends the first frame up the stack to the destination application and discards the second frame. If an error occurs in one of the network nodes and traffic cannot flow on that path, connectivity is provided through the other direction and ensures continuous communication.

Figure 5-89: HSR single-ring configuration example

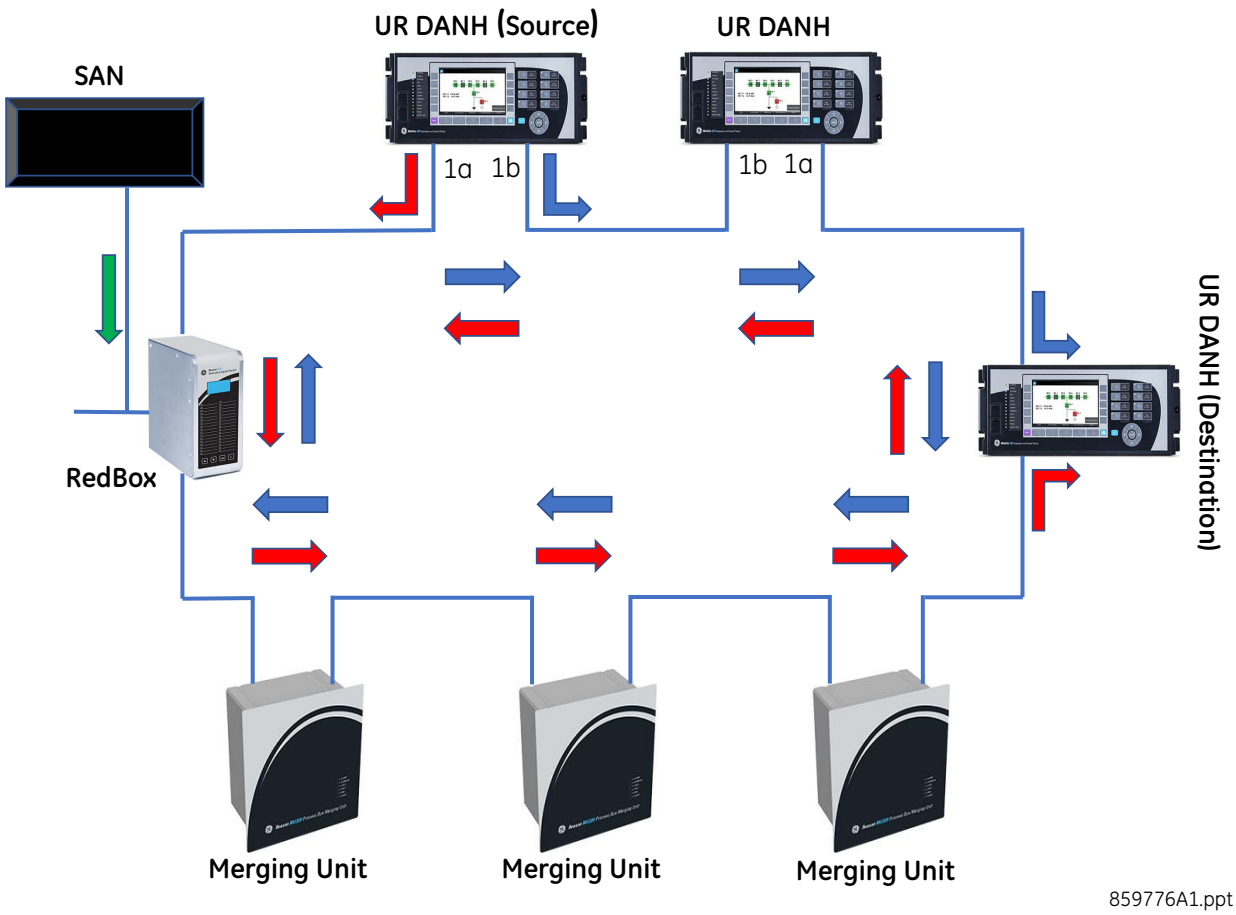

A Singly Attached Node, or SAN, such as a computer or printer, is a node with non-redundant network adapters. It uses a redundancy box (RedBox) to connect to the ring.

A merging unit (MU), such as the GE MU320, is an interface between analog and digital worlds. With an MU, the analog signals from the CTs and VTs in the yard are converted to digital signals and transmitted via the sampled value (SV) network communication protocol.

A UR with the Process Bus Module implements either single or dual HSR capability. It supports hierarchical ring topologies, such as connected rings, mesh topology, and an HSR ring in a PRP network.

In single HSR configuration, ports 1a and 1b of the Process Bus Module act as DANH, and any other ports on the Process Bus Module are disabled. Point-to-point configuration is not available. For single HSR, Process Bus Module 85, 86, or 87 can be used.

In dual HSR configuration, the UR to connect to two independent HSR rings. Ports 1a and 1b form one DANH node, and ports 3a and 3b form the second DANH node. Any other ports on the module are disabled. Traffic from HSR-1 ring is not forwarded to the HSR-2 ring and vice versa. The UR does not facilitate any message communication between the two independent HSR rings. In dual HSR, with four ports required, a Process Bus Module with order code 86 or 87 can be used.

While the UR does not provide RedBox functionality, an HSR ring can be connected to a PRP network using two RedBoxes, one for each redundant LAN of the PRP network. The RedBoxes are configured to handle PRP frames on the interlinks and HSR frames on the HSR ring. As per the IEC 62439-3:2016 standard, up to seven PRP networks can be connected to the same HSR ring.

While the UR does not provide QuadBox functionality, a QuadBox can be added to interconnect two HSR rings, which is beneficial when traffic on a single ring exceeds the ring's capability.

Figure 5-90: Dual HSR, double-ring configuration example

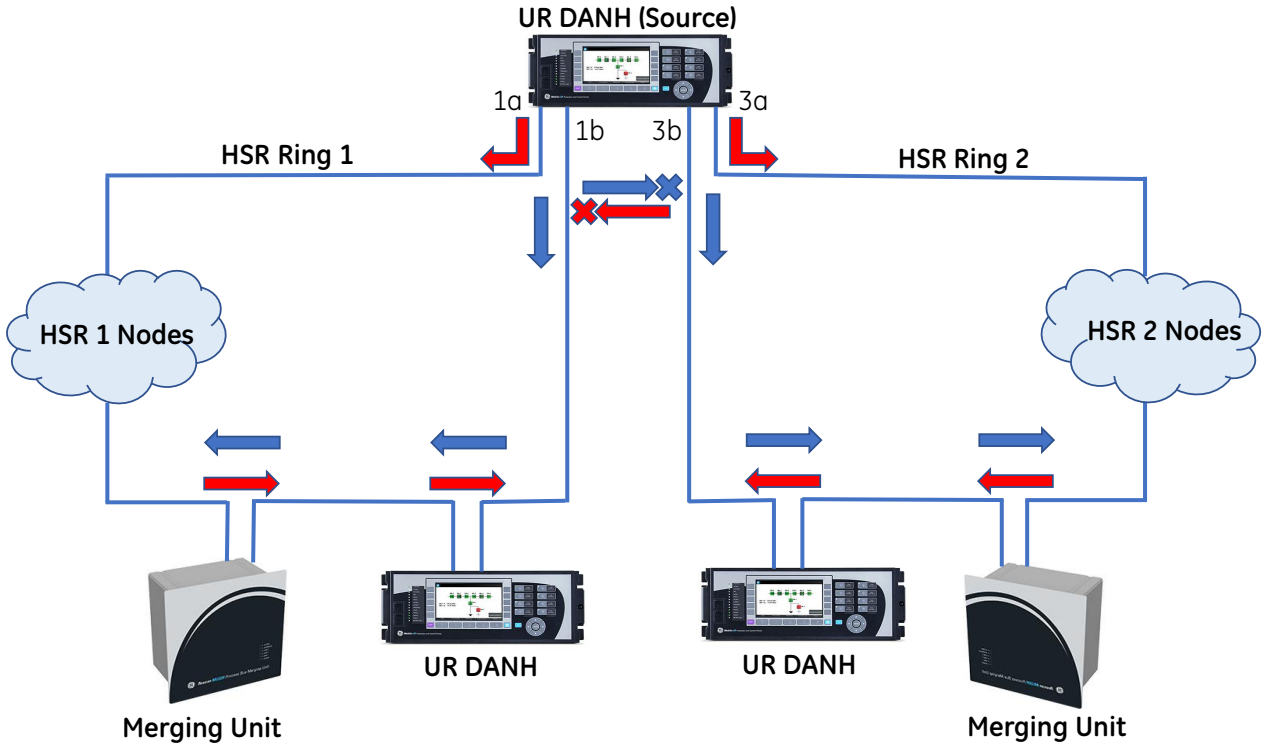

859777A1.ppt

5.6.3 General

SETTINGS ⇨⇩ PROCESS BUS MODULE ⇨ GENERAL

■ GENERAL ■	⇔	NETWORK CONFIG: INDEPENDENT	Range: INDEPENDENT, PRP, HSR, Dual HSR
	⇩	PRP SUPV MCST ADDR: 01154E000100	Range: 01 15 4E 00 01 00 to 01 15 4E 00 01 FF
	⇩	HSR-1 SUPV MCST ADDR 01154E000100	Range: 01 15 4E 00 01 00 to 01 15 4E 00 01 FF

⇕	**HSR-2 SUPV MCST ADDR 01154E000101**	Range: 01 15 4E 00 01 00 to 01 15 4E 00 01 FF
⇕	**PORT 1a FUNCTION: Enabled**	Range: Disabled, Enabled
⇓		
⇕	**PORT 4b FUNCTION: Enabled**	Range: Disabled, Enabled
⇕	**SV TRBL PRT BLOCK: Global**	Range: Global, Partial
⇕	**SV TRBL CONT OP BLK: Off**	Range: FlexLogic operand
⇕	**SV DELAY ALARM: 6.0 ms**	Range: 1.0 ms to 10.0 ms in steps of 0.1 ms
⇕	**QUALITY CHECK: Reject Questionable**	Range: Reject Questionable, Accept Questionable
⇕	**ANTI-ALIASING FILTER Enabled**	Range: Disabled, Enabled
⇑	**SMPSYNCH CHECK: Global**	Range: Global, Local, Any

Restart the relay after changing these settings, under **Maintenance > Reboot Relay Command**.

NETWORK CONFIG — This setting specifies the network configuration and redundancy for the Process Bus Module.

If set to INDEPENDENT, all ports on the Process Bus Module are enabled, and the Process Bus Module can be connected directly to merging units (MUs) or to a switch without redundancy. To enable and disable individual ports on the Process Bus Module in a point-to-point (PPP) network, use the **PORT x FUNCTION** settings.

If set to PRP or HSR, ports 1a and 1b are enabled. The **PORT 1a FUNCTION** and **PORT 1b FUNCTION** settings change.

If set to Dual HSR, ports 1a and 1b are enabled for one HSR ring, and when using a Process Bus Module with order codes 86 or 87 then ports 3a and 3b are enabled for another HSR ring. The **PORT x FUNCTION** settings change.

PRP SUPV MCST ADDR — This setting changes the multicast address used by the Parallel Redundancy Protocol (PRP) supervision frames. Configure all DANP devices in the PRP network with the same multicast address for the network supervision to operate properly. This setting is editable when the **NETWORK CONFIG** setting is set to PRP.

HSR-1 SUPV MCST ADDR — This setting changes the multicast address used by High-Availability Seamless Redundancy ring one (HSR-1 ports 1a and 1b) supervision frames, for single HSR configuration. Configure all DANH devices in the HSR network with the same multicast address for the network supervision to operate properly. This setting is editable when the **NETWORK CONFIG** setting is set to HSR or Dual HSR.

HSR-2 SUPV MCST ADDR — This setting changes the multicast address used by the HSR-2 (ports 3a and 3b) supervision frames for the second DANH in a Dual HSR configuration. Configure all DANH devices in the HSR network with the same multicast address for the network supervision to operate properly. This setting is editable when the **NETWORK CONFIG** setting is set to Dual HSR.

PORT 1a to 4b FUNCTION — These settings manually enable and disable Process Bus Module Ethernet ports. Typically, Process Bus Module ports are order-code dependent, and the INDEPENDENT network configuration enables all the ports by default, changing the settings shown here. These settings allow individual ports to be enabled and disabled. For example, to connect only a few of the ports, other ports can be disabled to avoid a PBEthPort-# Offline self-test error.

The fields active depend on order code and **NETWORK CONFIG** setting. For order code 85, ports 1a, 1b, 3a, and 3b are available to be turned on or off. For order codes 86 and 87, all eight ports can be available to be turned on or off.

When a port is disabled, all transmitting and receiving traffic on the port is blocked.

Relay restart is not required when changing these port function fields.

SV TRBL PRT BLOCK — In case of loss of any subscribed SV streams or due to bad quality of any subscribed SV frames, the protection functions of the relay need to be blocked to avoid undesired operation. This setting specifies the type of blocking applied.

When set to Global, all the protection functions that utilize the sampled values are blocked. Communications, data logging, and oscillography remain functional. Availability of switchgear control is determined by the **SV TRBL CONT OP BLK** operand.

When set to Partial, only those protection functions are blocked that utilize the sampled values from the affected SV stream. All other protection functions remain operational. Communications, data logging, and oscillography remain functional. Availability of switchgear control is determined by the **SV TRBL CONT OP BLK** operand.

SV TRBL CONT OP BLK — Selects a FlexLogic operand that determines if the contact outputs are blocked or not. When the state of the operand is low, the contact outputs are not blocked when there is a loss of any SV stream or received SV frames have bad quality. The user can execute control action, thus, enabling switchgear control through contact outputs during SV stream trouble.

When the operand is high, the contact outputs are blocked when there is a loss of any SV stream or received SV frames have bad quality. The switchgear control is not available through contact outputs during SV stream trouble.

SV DELAY ALARM — The sampled value (SV) frames can arrive with a delay from the MUs, which can be due to the MU performance or different network path delays. This setting specifies the maximum delay expected between the time a sample is taken at the MU and the time of arrival of that SV message, where sampling time is estimated based on the UR Process Bus Module clock and the sampling rate. If the calculated frame delay is more than this setting value, the RxSV# Delay Alarm FlexLogic operand asserts. The setting value needs to be calibrated and set at the commissioning time for the given network topology. An alarm in runtime indicates the network performance is degrading over the time. In short, this setting specifies how long the UR waits to declare that a sample is delayed. Protection is not blocked by this setting.

QUALITY CHECK — Flags are used to assess quality of sampled value data to ensure protection. This setting specifies how the sampled values are processed by the UR when the associated q.validity is set to Questionable. Quality is checked per AC bank, not per SV stream.

When set to Reject Questionable, the questionable data is treated the same as Invalid and the frame is rejected. Only Good quality data is accepted.

Set it to Accept Questionable only if it is absolutely known that questionable quality from a MU is not compromising the quality of the data for various applications. When set to Accept Questionable, the Good and Questionable quality data are accepted.

ANTI-ALIASING FILTER — This setting activates or deactivates the anti-aliasing filter, which conditions the sampled values from the Process Bus Module network.

The default value of Enabled is recommended, unless all the subscribed MUs use the Anti-Aliasing Filter for signal conditioning. When Enabled, the device applies a low-pass-filter and cuts-off all the harmonics above the 5th order harmonics. The protection and control functions utilize up to the 5th harmonics, beyond which the metering accuracy of harmonics and THD cannot be ensured.

Set the filter to Disabled only if harmonics and THD measurement accuracy are required and the performance and accuracy of the UR is tested with the MU.

SMPSYNCH CHECK — This setting is a time synchronization check. It specifies the time synchronization source of an SV stream (SmpSynch attribute value in an SV message header) expected by the UR Process Bus Module.

Set it to Global to accept all the SV streams with **SmpSynch** indicating a Global (2) value. A stream with a SmpSynch value other than Global (2) is rejected.

When set to Local, all SV streams with **SmpSynch** indicating a Local (1) or Global (2) area clock are accepted.

When set to Any, any **SmpSynch** value in the range of 0 to 254 is acceptable (0 to 127 for UR 7.80), and streams outside the range are rejected.

5.6.4 PBM PTP

SETTINGS ⇨⇩ PROCESS BUS MODULE ⇨⇩ PBM PTP

■ **PBM PTP** ■	⇔	**PTP FUNCTION:** **Disabled**	Range: Disabled, Master-Slave, Slave-only
	⇩	**PTP PROFILE:** **Power Utility Profil**	Range: Power Utility Profil, Power Profile

⇳	**PTP DOMAIN NUMBER:** **93**	Range: 0 to 255
⇳	**PTP VLAN PRIORITY:** **4**	Range: 0 to 7
⇳	**PTP VLAN ID:** **0**	Range: 0 to 4094
⇳	**PTP MASTER PRIO1:** **128**	Range: 0 to 255
⇳	**PTP MASTER PRIO2:** **128**	Range: 0 to 255
⇳	■ **Port 1a** ■	See below
⇳	■ **Port 1b** ■	
	⇩	
⇳	■ **Port 4a** ■	
⇧	■ **Port 4b** ■	

The time synchronizing source for the relay is set using **SETTINGS ⇨ PRODUCT SETUP ⇨⇩ REAL TIME CLOCK**. Another time source is set for the Process Bus Module.

The Process Bus Module supports the Precision Time Protocol (PTP) as PTP master and slave functionality.

The PTP state of each port is determined by the PTP settings and grandmaster clock availability on the local network.

Time synchronization supports IEEE 1588 PTPv2.

5.6.4.1 PBM PTP configuration

The C70 supports IEEE 1588 PTPv2 as PTP Slave or PTP Master on its Process Bus Module ports. It can be supplied with an external RTC clock from the main CPU ports (station bus ports), the Process Bus Module ports, or both. It utilizes one of the two clocks depending upon the configuration of the **SETTINGS > PRODUCT SETUP > REAL TIME CLOCK > SYNCRONIZING SOURCE** and **SETTINGS > PROCESS BUS MODULE > PBM PTP > PTP FUNCTION** settings, as follows:

- To use an external PTP Grand Master clock from the Process Bus Module port (UR acts as PTP Slave only), configure the following settings:
  - **SETTINGS > PRODUCT SETUP > REAL TIME CLOCK > SYNCRONIZING SOURCE** = PBM clock
  - **SETTINGS > PROCESS BUS MODULE > PBM PTP > PTP FUNCTION** = Slave-only

  With this configuration, the relay RTC will use the clock from the Process Bus Module port.

  If the **SETTINGS > PRODUCT SETUP > REAL TIME CLOCK > SYNCRONIZING SOURCE** setting is "PBM clock" and the **SETTINGS > PROCESS BUS MODULE > PBM PTP > PTP FUNCTION** setting is "Disabled," the RTC clock free-runs, and the Line Current Differential element is blocked.
- To use an external PTP Grand Master clock from the Process Bus Module port (UR in PTP Slave mode) or to enable the C70 as PTP Master on its Process Bus Module ports, configure the following settings:
  - **SETTINGS > PRODUCT SETUP > REAL TIME CLOCK > SYNCRONIZING SOURCE** = PBM clock
  - **SETTINGS > PROCESS BUS MODULE > PBM PTP > PTP FUNCTION** = Master-Slave

  With this configuration, the relay RTC uses the clock from the Process Bus Module port.
- To use an external clock through a main CPU port (PTP Slave, IRIG-B, other source) and to enable the C70 as PTP Master on its Process Bus Module ports, configure the following settings:
  - **SETTINGS > PRODUCT SETUP > REAL TIME CLOCK > SYNCRONIZING SOURCE** = PP/IRIG-B/PTP/Other, or IRIG-B/PP/PTP/Other, or PP/PTP/IRIG-B/Other
  - **SETTINGS > PROCESS BUS MODULE > PBM PTP > PTP FUNCTION** = Master-Slave, or Slave, or Disabled

With this configuration, the relay RTC uses the clock from the main CPU port.

The Master-Slave option in the **PTP FUNCTION** setting is not available in L90 and L30 relays.

Some UR applications like oscillography, event recorder, and datalogger use the real-time clock for time-stamping.

Note that in all of these scenarios, when the Grand Master clock is not available through a CPU port and/or Process Bus Module, all the elements (protection, control, monitoring, logic, and so on) in the C70, except the Line Current Differential element, remain functional without requiring any external synchronizing source for the C70, as long as all the sampled values subscribed by the relay are synchronized according to the setting definition of "SmpSynch Check" (**SETTINGS > PROCESS BUS MODULE > GENERAL > SmpSynch Check**) and pass the other acceptance criteria.

PTP FUNCTION — Sets the source for time synchronization for the Process Bus Module.

When set to Disabled, PTP is disabled on all ports of the Process Bus Module.

When set to Master-Slave, the Process Bus Module acts as a PTP slave when a grandmaster clock is available in the communication path. If no better clock than its own clock is available in the communication path, the module switches to master mode and provides the grandmaster functionality by sending Announce frames and other supporting PTP Master frames. In other words, in Master-Slave mode when there is no PTP Master on the network, the C70 becomes the Master. In a point-to-point network, there is no other Master and the C70 synchronizes the merging units.

When set to Slave-only, the Process Bus Module acts as a PTP slave ordinary clock if a grandmaster clock is available in the network. If no grandmaster clock is available in the communication path, the module continues to wait for the Announce messages.

When PTP is enabled in either slave or master mode but no grand master is available on any of the Process Bus Module ports, "PB PTP Failure" events are generated.

To view the synchronizing source, see **ACTUAL VALUES ⇨⇩ PB MODULE ⇨⇩ TIME SYNC ⇨ Sync Source**.

PTP PROFILE — Specifies the profile to be used for PTP Master communication. The Power Utility Profil option relates to IEC 61850-9-3, while the Power Profile option relates to IEEE C37.238 2017.

When the Process Bus Module PTP is in the slave state, this setting has no effect. As a slave, the Process Bus Module accepts both the Power Profile and the Power Utility Profile.

PTP DOMAIN NUMBER — Set this to the domain number of the grandmaster-capable clock(s) to synchronize to. A network can support multiple time distribution domains, each distinguished with a unique domain number. The Power Utility Profile recommends 93 as the value for the domain number.

PTP VLAN PRIORITY — This setting selects the value of the priority field in the 802.1Q VLAN tag in PTP request messages issued by the relay.

PTP VLAN ID — This setting selects the value of the ID field in the 802.1Q VLAN tag in PTP request messages issued by the relay. As these messages have a destination address that indicates they are not to be bridged, their VLAN ID serves no function, and so the setting can be left at its default value. Depending on the characteristics of the device to which the relay is directly linked, VLAN ID can have no effect.

PTP MASTER PRIO1 — Priority1 is used in the execution of the best master clock algorithm and lower values take precedence. The operation of the best master clock algorithm selects clocks from a set with a lower value of priority1 over clocks from a set greater than priority1.

The setting values Priority1 and Priority2 decide when the UR Process Bus Module ports are selected as grandmaster clock. In a single LAN, GE recommends the following:

- Set the Priority1 of the UR larger than the actual grandmaster, so that the grandmaster(s) takes precedence over UR
- Set the same Priority1 for all the UR Process Bus Module ports participating in one communication path
- Use Priority2 to further prioritize the UR Process Bus Module ports in the network. The UR with lower value of Priority2 is selected as best master when Priority1, clockClass, clockAccuracy, and scaledOffsetLogVariance are the same.

The setting is editable in the software when the **PTP FUNCTION** setting is Master-Slave.

PTP MASTER PRIO2 — Priority2 is used in the execution of the best master clock algorithm and lower values take precedence. If the operation of the best master clock algorithm fails to order the clocks based on the values of priority1, clockClass, clockAccuracy, and scaledOffsetLogVariance, the priority2 attribute allows the creation of up to 256 priorities to further fine-tune the selection of best clocks.

If Priority2 is configured the same for two URs in the same communication path, best master clock algorithm uses clockIdentity to resolve the tie-breaker.

The setting is editable in the software when the **PTP FUNCTION** setting is Master-Slave.

5.6.4.2 Ports

SETTINGS ⇨⇩ PROCESS BUS MODULE ⇨ PBM PTP ⇨⇩ Port 1a(4b)

■ **Port 1a** ■	⇔	**PATH DELAY ADDER:** **0 ns**	Range: 0 to 60000 ns in steps of 1
	⇧	**PATH DELAY ASYMMETRY: 0 ns**	Range: -1000 to +1000 ns in steps of 1

These setting are editable in the software when the **PTP FUNCTION** setting is not Disabled.

Up to eight ports display here, depending on the Process Bus Module.

Default port assignments for the Process Bus Module are as follows:

- Parallel Redundancy Protocol (PRP) — Ports 1a and 1b are enabled
- High-Availability Seamless Redundancy (HSR) — Ports 1a and 1b are enabled
- Dual HSR — Ports 1a and 1b support HSR-1, and ports 3a and 3b support HSR-2
- INDEPENDENT — Ports 1a to 4b are enabled

Port availability by order code is as follows:

- 85 — Ports 1a and 1b, or 3a and 3b
- 86 — All eight ports
- 87 — All eight ports

5

For the following two settings, there is no dependency with the **NETWORK CONFIG** setting. For order code 85, ports 1a, 1b, 3a, and 3b settings are available. For order codes 86 and 87, all the port settings are available. Configure these settings as per your network. For example, for order code 85, while ports 1a, 1b, 3a, and 3b settings display, configure ports 1a and 1b when your network uses these two ports.

PATH DELAY ADDER — The time delivered by PTP is advanced by the time in this setting prior to the time being used to synchronize the relay's real-time clock. This is to compensate for time delivery delays not compensated for in the network. In a fully compliant power utility network, the peer delay and the processing delay mechanisms compensate for all the delays between the grandmaster and the relay. In such networks, use 0 ns for this setting.

In networks containing one or more switches and/or clocks that do not implement both of these mechanisms, not all delays are compensated for, so the time of message arrival at the relay is later than the time indicated in the message. This setting can be used to approximately compensate for this delay. However, as the relay is not aware of network switching that changes dynamically the amount of uncompensated delay, there is no setting that always corrects completely for uncompensated delay. A setting can be chosen that reduces worst-case error to half of the range between minimum and maximum uncompensated delay, if these values are known.

PATH DELAY ASYMMETRY — This setting corresponds to "delayAsymmetry" in PTP, which is used by the peer delay mechanism to compensate for any difference in the propagation delay between the two directions of a link. Except in unusual cases, the two fiber cables are of essentially identical length and composition, so use 0 ns for this setting.

In unusual cases where the length of the link is different in different directions, make this setting the number of nanoseconds that the Ethernet propagation delay to the relay is longer than the mean of path propagation delays to and from the relay. For example, if it is known from the physical length of the fiber cable and the propagation speed in the fiber that the delay from the relay to the Ethernet switch it is connected to is 9 000 ns and that the delay from the switch to the relay is 11 000 ns, then the mean delay is 10 000 ns, and the path delay asymmetry is +1 000 ns.

5.6.5 SV Stream Config

The UR platform can subscribe up to eight sampled value (SV) streams. Up to six banks and up to six sources can be used for protection.

Reception of a sampled value (RxSV) can be enabled in the IEC 61850-9-2LE or IEC 61869-9/13 format.

These settings are available in the software only. They also can be configured in the software using a CID file.

The path is **Settings > Process Bus Module > SV Stream Config**. If a message displays that the data cannot be opened, it can mean that access timed out; try again.

Figure 5-91: B30 Example of sampled values configuration

Save | Restore | Default | Reset | Show Enabled | Show Custom Layout | VIEW ALL mode

SV MESSAGES

RxSV Streams	RxSV1	RxSV2	RxSV3	RxSV4	RxSV5
SV Stream	IEC 61850-9-2LE r2-1	IEC 61850-9-2LE r2-1	IEC 61850-9-2LE r2-1	IEC 61850-9-2LE r2-1	IEC 61850-9-2LE r2-1
svID	IEDNameMU11	IEDNameMU22	IEDNameMU33	IEDNameMU44	IEDNameMU55
Dst MAC	01-0C-CD-04-00-01	01-0C-CD-04-00-02	01-0C-CD-04-00-03	01-0C-CD-04-00-04	01-0C-CD-04-00-0
ConfRev	1	1	1	1	1
Stream Status					
Advanced Config					
MU SCL Import	Import	Import	Import	Import	Import
SvCBRef	RxSV1IEDNameMU111/LLN0.	RxSV2IEDNameMU221/LLN0.	RxSV3IEDNameMU331/LLN0.	RxSV4IEDNameMU441/LLN0.	RxSV5IEDNameMU551/

AC BANKS

AC BANKS	B1	B2	B3	B4	B5
Phase Origin 1	RxSV1-VT1/PHS	RxSV8-CT1/PHS	RxSV2-VT1/PHS	RxSV7-CT1/PHS	None
Phase Origin 2	None	None	None	None	None
Neutral Origin 1	RxSV1-VT1/NTR	RxSV8-CT1/NTR	RxSV2-VT1/NTR	RxSV7-CT1/NTR	None
Neutral Origin 2	None	None	None	None	None
Crosschecking	None	None	None	None	None
Phase CT Primary	1	1000	1	1000	1
Phase CT Secondary	1 A	1 A	1 A	1 A	1 A
Ground CT Primary	1	100	1	1000	1
Ground CT Secondary	1 A	1 A	1 A	1 A	1 A
Phase VT Ratio	500.00	1.00	500.00	1.00	1.00

SIGNAL SOURCES

PLATFORM	SOURCE1	SOURCE2	SOURCE3	SOURCE4	SOURCE5
Name	SRC 1	SRC 2	SRC 3	SRC 4	SRC 5
Phase CT	B4	B2	B4	B2	B4
Ground CT	B4	B2	B4	B2	B4
Phase VT	B1	B3	B1	B3	B1
Aux VT	B1	B3	B1	B3	B1
Alternate Banks					
Alt Phase CT	None	None	B2	B4	B2
Alt Ground CT	None	None	B2	B4	B2
Switch Alt CT	OFF	OFF	OFF	OFF	OFF
Alt Phase VT	None	None	B3	B1	B3
Alt Aux VT	None	None	B3	B1	B3
Switch Alt VT	OFF	OFF	OFF	OFF	OFF
BAY	**SOURCE7**	**SOURCE8**	**SOURCE9**	**SOURCE10**	**SOURCE11**
Name	SRC 7	SRC 8	SRC 9	SRC 10	SRC 11
Phase CT	B7	B8	B9	B10	B11
Ground CT	B7	B8	B9	B10	B11

The configuration window is explained as follows:

- The four areas of the window (RxSV Streams, Advanced Config, AC Banks, and Sources) collapse and expand by clicking their buttons
- A column collapses and expands by clicking its heading
- The **Show Enabled** button toggles active/configured content
- The **Show Custom Layout** button toggles changes made to formatting, such as column width. Such changes can be made with or without the button active, and they are retained when the panel is closed.

- There are up to eight RxSV, eight AC Bank, and six Source columns. A B30 can have up to 16 RxSV, 22 AC Bank (16 CT and six VT), and 22 Source columns.
- With IEC 61869-9, the Advanced Config fields populate and are read-only when importing a file
- Rules are enforced and the configuration cannot be saved until the rules are followed. For example, Neutral Origin 1 and Neutral Origin 2 cannot be mapped to the same SV stream. See the troubleshooting section that follows.
- The window is configured based on the separate areas and not based on columns. For example, stream RxSV1 is configured in the SV Messages area of the window, not the first column in the entire window. Or for example, Source1 in the first column can be configured to use AC Bank B2 in the second column.
- The following example shows that Source1 at the bottom of the window is set to map to AC Bank B2, which is mapped to the first stream (RxSV1) and its available VT1 phase voltage and VT2 neutral voltage.

Figure 5-92: Understanding SV configuration

SV MESSAGES		
VT Channels	8	4
ASDUs	1	1
Variant Code	F4800S1I0U8	
CT1-A	None	AC1
CT1-B	None	AC2
CT1-C	None	AC3
CT1-N	None	AC4
CT2-A	None	None
CT2-B	None	None
CT2-C	None	None
CT2-N	None	None
VT1-A	AC1	AC5
VT1-B	AC2	AC6
VT1-C	AC3	AC7
VT1-N	AC4	AC8
VT2-A	AC5	None
VT2-B	AC6	None
VT2-C	AC7	None
VT2-N	AC8	None

AC BANKS		
AC BANKS	B1	B2
Phase Origin 1	None	RxSV1-VT1/PHS
Phase Origin 2	None	None
Neutral Origin 1	None	None
Neutral Origin 2	None	RxSV1-VT2/NTR
Crosschecking	None	None
Phase CT Primary	1	1
Phase CT Secondary	1 A	1 A
Ground CT Primary	1	1
Ground CT Secondary	1 A	1 A
Phase VT Ratio	1.00	1.00
Phase VT Secondary	66.4	66.4
Phase VT Connection	Wye	Wye
AUX VT Ratio	1.00	1.00
AUX VT Secondary	66.4	66.4
AUX VT Connection	Vag	Vag

SOURCES		
SOURCES	SOURCE1	SOURCE2
Name	SRC 1	SRC 2
Phase CT	None	None
Ground CT	None	None
Phase VT	B2	None
Aux VT	None	None

- The UR allows switching AC banks (essentially streams) from the main measuring MU to the alternate measuring MU. Once an operand assigned to the **SWITCH ALT CT/VT** setting is logical "1," the input data to this source is switched from the banks assigned to PHASE CT/GROUND CT to the banks assigned to ALT PHASE CT/ALT GROUND CT settings for current transformers. This is similar for voltage transformers.

- Banks assigned to the same function for the main and alternate input data have to have the same CT and VT nominals and connections, otherwise a warning is generated and switching functionality is prohibited. For example, banks assigned to the PHASE CT and ALT PHASE CT have to have same primary and secondary CT values.
- During switching from the main CT/VT input data to alternate input data and vice versa, all relay functions are blocked for two power cycles and metering data does not update
- See the Source Switching section under **SETTINGS > SYSTEM SETUP > SIGNAL SOURCES** in this manual for application examples of AC bank switching

An example of the configuration process is as follows:

1. Configure SV streams by importing an MU CID file. This populates the SV Messages area of the window.
2. Configure the Sources fields.
3. Map the AC Bank fields to the RxSV Stream fields.
4. Troubleshoot using the messages displayed during configuration and/or upon save so that the rules are followed. Saving frequently during configuration helps to deal with issues early.
5. Restart the relay for the changes to take effect.

The table outlines mapping examples using CT channels. VT channels are similar.

Table 5-19: CT configuration mapping examples

Scenario	AC Bank configuration	Advanced Config configuration
No CT signal in the SV stream	---	---
One neutral	Neutral Origin 1 = RxSV1-CT1/NTR	CT1-N maps to AC1
Two neutrals	Neutral Origin 1 = RxSV1-CT1/NTR Neutral Origin 2 = RxSV2-CT2/NTR	CT1-N maps to AC1 CT2-N maps to AC2
Three phases	Phase Origin 1 = RxSV1-CT1/PHS	CT1-A, B, C map to AC1, 2, 3
Three phases followed by one neutral	Phase Origin 1 = RxSV1-CT1/PHS Neutral Origin 1 = RxSV1-CT1/NTR	CT1-A, B, C, N map to AC1, 2, 3, 4
One neutral followed by three phases	Neutral Origin 1 = RxSV1-CT1/NTR Phase Origin 1 = RxSV1-CT2/PHS	CT1-N maps to AC1 CT2-A, B, C map to AC2, 3, 4
One neutral followed by three phases, then followed by one neutral	Neutral Origin 1 = RxSV1-CT1/NTR Phase Origin 1 = RxSV1-CT2/PHS Neutral Origin 2 = RxSV2-CT2/NTR	CT1-N maps to AC1 CT2-A, B, C, N map to AC2, 3, 4, 5
Three phases followed by one neutral, then another neutral	Phase Origin 1 = RxSV1-CT1/PHS Neutral Origin 1 = RxSV1-CT1/NTR Neutral Origin 2 = RxSV2-CT2/NTR	CT1-A, B, C, N map to AC1, 2, 3, 4 CT2-N maps to AC5
Two three-phases	Phase Origin 1 = RxSV1-CT1/PHS Phase Origin 2 = RxSV2-CT2/PHS	CT1-A, B, C map to AC1, 2, 3 CT2-A, B, C map to AC4, 5, 6
Three phases followed by one neutral, then another three phases	Phase Origin 1 = RxSV1-CT1/PHS Neutral Origin 1 = RxSV1-CT1/NTR Phase Origin 2 = RxSV2-CT2/PHS	CT1-A, B, C, N map to AC1, 2, 3, 4 CT2-A, B, C map to AC5, 6, 7
Three phases followed by another three phases, then one neutral	Phase Origin 1 = RxSV1-CT1/PHS Phase Origin 2 = RxSV2-CT2/PHS Neutral Origin 2 = RxSV2-CT2/NTR	CT1-A, B, C map to AC1, 2, 3 CT2-A, B, C, N map to AC4, 5, 6, 7
Three phases, one neutral, then another three phases and one neutral. See the following figure.	Phase Origin 1 = RxSV1-CT1/PHS Neutral Origin 1 = RxSV1-CT1/NTR Phase Origin 2 = RxSV2-CT2/PHS Neutral Origin 2 = RxSV2-CT2/NTR	CT1-A, B, C, N map to AC1, 2, 3, 4 CT2-A, B, C, N map to AC5, 6, 7, 8

Figure 5-93: Example three phases, one neutral, then three phases and one neutral

SV MESSAGES		
RxSV Streams	**RxSV1**	**RxSV2**
SV Stream	IEC 61869-9 ed1.0	IEC 61869-9 ed1.0
svID	SV1	SV2
Dst MAC	01-0C-CD-04-00-00	01-0C-CD-04-00-00
ConfRev	0	0
Stream Status	-NA-	-NA-
Advanced Config		
MU SCL Import	Import	Import
SvCBRef		
CT Channels	4	8
VT Channels	4	4
ASDUs	1	1
Variant Code	F4800S1I4U4	F4800S1I8U4
CT1-A	AC1	AC1
CT1-B	AC2	AC2
CT1-C	AC3	AC3
CT1-N	AC4	AC4
CT2-A	None	AC5
CT2-B	None	AC6
CT2-C	None	AC7
CT2-N	None	AC8
VT1-A	AC5	AC9
VT1-B	AC6	AC10
VT1-C	AC7	AC11
VT1-N	AC8	AC12
VT2-A	None	None
VT2-B	None	None
VT2-C	None	None
VT2-N	None	None

AC BANKS		
AC BANKS	**B1**	**B2**
Phase Origin 1	RxSV1-CT1/PHS	None
Phase Origin 2	RxSV2-CT2/PHS	None
Neutral Origin 1	RxSV1-CT1/NTR	None
Neutral Origin 2	RxSV2-CT2/NTR	None
Crosschecking	None	None

5.6.5.1 Logic

The logic diagram follows.

Figure 5-94: SV stream logic diagram

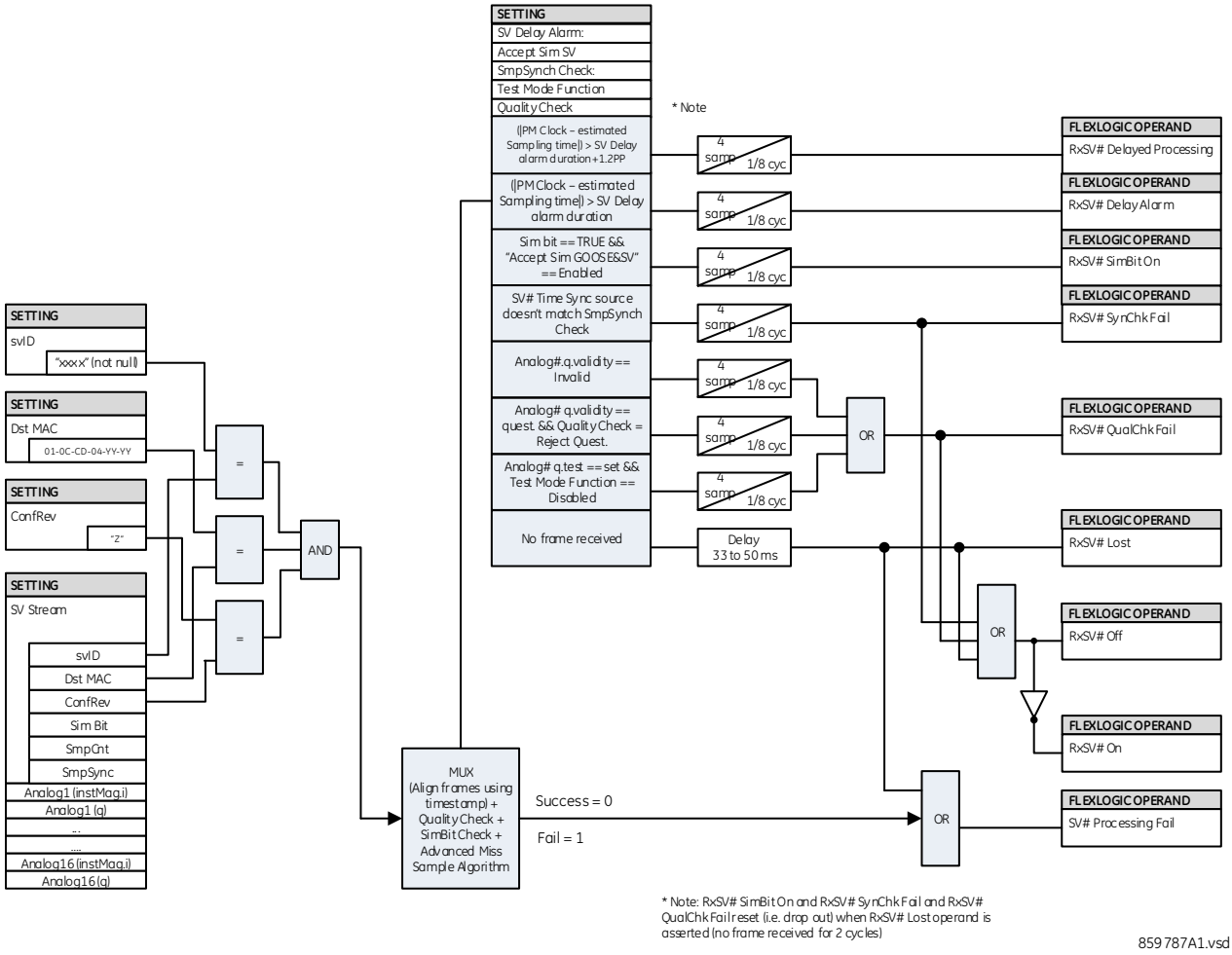

SV streams are accepted based on the following settings that need to match the MU:

- SmpSynch Check — Time synchronization check as outlined earlier in the General section
- Quality Check — Outlined earlier
- svID — Multicast Sampled Value Identification of a stream
- Dst MAC — Destination Media Access Control address in the header of the SV message
- ConfRev — When the configuration revision is non-zero, the UR accepts the frame when it matches its configured value

NOTE

The relay decodes an SV stream when the DstMAC attribute of the injected SV stream matches any of the configured SV stream subscriptions.

Each qualified SV stream (that is, with matching svID, Dst MAC, and ConfRev) that is mapped to any of the AC Banks is checked for the SV delay, matching Sim bit, time synchronization source, and quality checks.

When four samples in 1/8th of power cycle duration fail any of these checks, a corresponding FlexLogic operand is asserted, with a drop-out timer of one protection pass. The drop-out timer is retriggered each time that the check fails.

The RxSV# Lost FlexLogic operand is set when consecutive 160 samples (two cycles) are lost following the assertion of **SV DELAY ALARM**. The time accuracy for the assertion of this operand can be up to two protection passes.

The RxSV# Off FlexLogic operand is set when the "Miss Sample Algorithm" fails (for example, due to temporary loss of stream or stream rejected due to any condition check failure) or the stream is lost, with a drop-out time of 17 protection passes. Every "Miss Sample Algorithm" fail condition for that RxSV# stream retriggers the drop-out timer for the RxSV# Off operand.

5.6.5.2 Message troubleshooting

Examples for messages displayed are as follows:

- The SvID attribute of RxSV1 is empty — Type a name for the stream in the svID field
- The number of channels being selected for CT2-N...exceed the total allowable 7 CT channels — Set the CT2-N field to None, or increase the CT Channels field to 8
- The number of channels being selected for CT inputs...exceeds the total allowable 4 CT channels — The CT Channels field is set at 4 and there are entries in the CT2-A/B/C/N fields. Set the latter fields to None or increase the number of channels.
- The selected 'RxSV3' stream is disabled. Configure stream before assigning to AC Bank Phase Origin — Enable the RxSV3 stream in its SV Stream field
- The AC Bank 2 assigned to Source 1 is not configured — B2 is set in a Source1 field at the bottom of the window. In the AC BANKS area of the window, go to the B2 column, and set one of the fields.
- The AC Bank 2 is a Voltage channel and is assigned to Phase CT of Source 1 — In the Source area of the window, change the B2 assignment from Phase CT to VT
- The AC Bank x assigned...is not configured.., — Configure the AC Banks section in the software window before setting the field
- The CT channels set of the selected 'RxSV1-CT1' are not configured — In the Advanced Config section, set the CT fields

5.6.5.3 SV quality processing

- Any degradation in the measurement or sampled value data of the merging unit inhibits the protection functions of the IED. IEC 61850 assigns quality attributes to each sampled value channel, to identify the data validity. The UR Process Bus Module interface uses the quality flags of subscribed analog channels to enable or inhibit the protection functions
- Quality is to be checked per channel in an ASDU/frame. For example, if A-phase current has Invalid quality, but other current channels have quality good, the complete frame is accepted. Good quality channels can be used in relay protection.
- For protection functions to work correctly, q.validity needs to be good. Samples with Invalid quality can result in unacceptable behavior from the protection functions. An SV analog quantity with q.validity = Invalid is ignored.
- When "Quality Check" is set to 'Accept questionable' data, the data with q.validity = questionable is valid. When "Quality Check" is set to 'Reject questionable' data, the data with q.validity = questionable is ignored.
- When the relay is in-service, or test function is Disabled, the data with q.test set to TRUE is processed as invalid
- When the relay test function is forced or isolated, the data with q.test set to TRUE and q.test set to FALSE is valid.
- If any channel value within a sampled value stream is rejected due to a quality check, the device sets a FlexLogic operand "RxSV# QualChk Fail" for the duration of the quality check failure

5.6.5.4 SV simulation processing

When received SV frames have Sim Bit TRUE, the frame is ignored unless the value of @Master/LPHD1.Sim.stVal is true (@Master/LPHD1.Sim.stVal is true when **Settings > Simulation > Subscribe to Simulated Values > Simulation Mode** is Enabled). When @Master/LPHD1.Sim.stVal is TRUE

- Once subscribed SV messages with simulation bit TRUE are accepted, subscribed SV messages with simulation bit FALSE are ignored and the received SV messages with the simulation bit TRUE are used in place of the actual SV messages until @Master/LPHD1.Sim.stVal is set to FALSE
- When a SV frame is received with simulation bit TRUE, the FlexLogic operand for the corresponding stream is set as RxSV# SimBit On. After the latest change in simulation bit as recorded by the "Latest Sim Bit Change" time stamp, the relay takes 4 to 8 msec to process and assert the RxSV# SimBit On FlexLogic operand.

- If SV messages with simulation bit TRUE are not received, the RxSv# continues to use the actual SV frames
- When the value of @Master/LPHD1.Sim.stVal changes from TRUE to FALSE
  - Subscribed SV messages with simulation bit TRUE are ignored immediately after this change
  - Only subscribed SV messages with simulation bit FALSE are accepted

5.6.5.5 Settings

The following settings are available.

SV Stream

Range: Disabled, IEC 61850-9-2LE r2-1, IEC 61869-9 ed1.0
Default: Disabled

This setting enables an SV stream and selects the SV frame format, or protocol.

When set to IEC 61850-9-2LE, the UR assumes that the received SV frame references to datasets that comply with IEC 61850-9-2LE, Table 6: Dataset (PhsMeas1). The UR must be configured with a system frequency of 50 or 60 Hz for correct operation.

When set to IEC 61869-9, the UR assumes that the dataset rules comply with IEC 61869-9 ed1.0 and that the number of Application-layer Service Data Units (ASDUs) are user-configurable.

When set to Disabled, the rest of the RxSV# setting fields are read-only default values.

Recycle power to the relay when changing this setting.

svID

Range: 1 up to 129 Visible String characters
Default: empty string

svID refers to the name of the sampled value packet. The svID field of incoming SV messages must exactly match this value for the message to be accepted as a valid RxSV# message. The svID field of the sampled value frame must be unique within the system/substation.

Dst MAC

Range: any valid multicast MAC (12-digit hexadecimal number)
Default: 01-0C-CD-04-00-00

Only received SV messages having a destination Media Access Control (MAC) address equal to this value are accepted as valid RxSV# messages. Each address must be unique.

ConfRev

Range: 0 to 2147483647 in steps of 1
Default: 0

ConfRev refers to configuration revision, which is a count of configuration changes in the SV control block. If the value entered here is non-zero, the ConfRev field of incoming SV messages must match this value for the message to be accepted as a valid RxSV# message. If the setting is zero, RxSV# does not check the value received in the ConfRev field.

Stream Status

This is an LED status indicator for the reception of an SV stream (RxSV#).

A green LED reflects the RxSV# On FlexLogic operand, meaning that the SV stream is online.

A red LED reflects the RxSV# Off FlexLogic operand, meaning that the SV stream is offline.

An orange LED reflects the RxSV# Lost FlexLogic operand, meaning that the SV stream is completely lost and no SVs are received.

When the EnerVista UR Setup software is not online or the stream is disabled, the LED is greyed-out with Not Available, or "-NA-" status.

Advanced Configuration

Click the button to display or hide the fields.

These are settings to import an MU CID file and/or support IEC 61869-9 based SV streams, as per Table 902 on Standard sample rates. IEC 61869-9 allows flexibility on numbers of current and voltage channels. It can be in one of these sequences: A, B, C, N or A, AB, B, BC, C, CA, N. The UR supports up to eight CT channels and up to eight VT channels and one or two ASDUs for protection applications. The following settings are active when the **SV Stream** field is set to IEC 61869-9, and they also depend on the MU **Variant Code**.

MU SCL Import

Use this feature to configure SV streams by importing an MU CID file. The setting file comparison with IEC 61869-9-2LE configuration is not available. The IEC 61850 Merge feature with IEC 61869-9-2LE is not available.

Upon clicking the Import button and selecting a .cid file, a window appears from which to select the stream to import.

Figure 5-95: Selecting a stream to import from a merging unit CID file

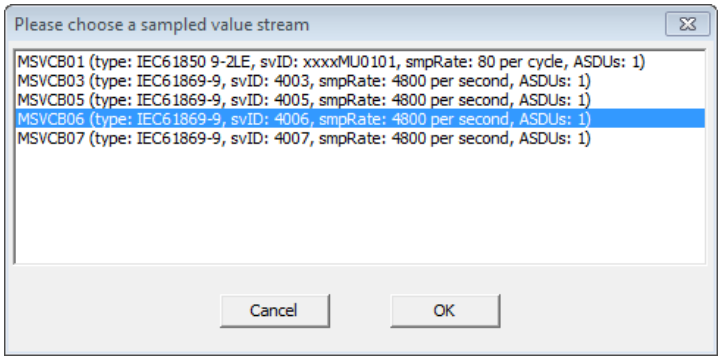

5

Rules for accepting a CID file include

- The same remote channel cannot be mapped to more than one AC bank channel
- An AC bank channel cannot be mapped to more than one remote channel
- For each AC bank, there are three phase inputs from the same SV control block and all three inputs are configured
- Phase 1 and Phase 2 inputs are not from the same SV control block
- Phase 1 and Phase 2 aux inputs are not from the same SV control block
- A configured Phase consumes three analog channels and Aux consumes one analog channel, with a maximum of 24 channels

SvCBRef

Range: 0 up to 129 alphanumeric, underscore, slash, and period characters, beginning with an alpha character
Default: empty string

This field is read-only. When imported, the MU SCL file populates this field. The value is an ObjectReference to the publishing control block in the format:

<LDName>/LLN0.<SvCBName>

where <LDName> is the function-related name, if any, of the logical device containing the publishing control block, otherwise the product-related name of that logical device, and <SvCBName> is the name of the publishing control block.

When RxSV# is configured manually, the field is empty.

CT Channels

Range: 0 to 8
Default: 4

This setting specifies the number of CT channels available in the subscribed RxSV# message from the publisher MU. The CT-1 fields reflect the number selected here. The number of current quantities matches the number specified by the **Variant Code** of the MU.

Typically, a CT channel includes four current channels (three phase-ground currents and one ground/neutral/earth current). A current channel is the combination of the current sample value attribute (AmpSv.instMag.i) and the subsequent quality attribute (AmpSv.q).

If CT Channels is 4, CT1-A/B/C/N are supported for the stream.

If CT Channels is 8, CT2-A/B/C/N also are supported for the stream.

If CT Channels is 0, no CT channels display for AC input selection.

This setting is read-only and fixed at 4 when an **SV Stream** is set to IEC 61850-9-2LE.

If a message displays that "the number of channels being selected for CT inputs...exceeds the total allowable 4 CT channels," it means that the CT Channels field is set at 4 and there are entries in the CT2-A/B/C/N fields. Set the latter fields to None or increase the number of channels.

VT Channels

Range: 0 to 8
Default: 4

This setting specifies the number of VT channels in the subscribed RxSV# message from the publisher MU. Typically, VT channels include four voltage channels (three phase-ground voltages and auxiliary voltage). This setting specifies the number of voltage channels in the subscribed RxSV# message. The voltage channel is the combination of voltage sample value attribute (VolSv.instMag.i) and the corresponding quality attribute (VolSv.q). The VT-1 fields reflect the number selected here. The number of voltage quantities matches the number specified by the **Variant Code** of the dataset.

If VT Channels is 4, VT1-A/B/C/N are supported for the stream.

If VT Channels is 8, VT2-A/B/C/ also are supported for the stream.

If VT Channels is 0, no VT channels display for AC input selection.

This setting is read-only and fixed at 4 when an **SV Stream** is set to IEC 61850-9-2LE.

If a message displays that "the number of channels being selected for VI inputs...exceeds the total allowable 2 VT channels," it means that the VT Channels field is set at 2 and there are more than two entries in the VT1-A/B/C/N fields. The number of configured VT1 fields needs to match the VT Channels field.

ASDUs

Range: 1, 2
Default: 1

This setting specifies the number of Application-layer Service Data Units (ASDUs) concatenated in one Application Protocol Data Unit (APDU) in the subscribed RxSV# message. When concatenating several ASDUs into one frame, the ASDU with the oldest samples is the first one in the frame.

This setting is read-only and set at the default when an **SV Stream** is set to IEC 61850-9-2LE.

Recycle power to the relay when changing this setting.

Variant Code

The EnerVista software auto-populates the Variant Code for the RxSV# message based on the settings Sample Rate, the number of ASDUs, the number of CT Channels, and the number of VT Channels configured.

For example, F4800S2I8U0 describes sampled values with 4800 samples per second, two ASDU (samples) per message, 8 currents, and no voltages.

As another example, F4800S1I8U4 means sampled values with 4800 samples per second, 1 ASDU per message, 8 CT channels, and 4 VT channels.

This field is read-only as per IEC 61869-9: 2016, Clause-6.903.2.

CT1-A/B/C

Range: None, AC1 to AC16
Default: AC1/AC2/AC3

This setting specifies the sequence of Analog Channel (per phase) that is mapped to the CT-1 of the corresponding stream. An origin to CT Phase input defines the physical measurement input to the CT bank by mapping specific AC inputs from that merging unit (or SV message).

The fields are active when the **SV Stream** field is set to IEC 61869-9. The CT1 phases are available if the number of **CT Channels** is 4 or below. CT2 is added if **CT Channels** is 5 or higher.

The fields are set to the defaults and are read-only when the **SV Stream** field is set to IEC 61850-9-2LE.

CT1- N

Range: None, AC1 to AC16
Default: AC4

This setting specifies the Analog Channel that is mapped to the CT ground/neutral input. An origin to CT1-N input defines the physical measurement input to the CT bank by mapping specific AC inputs from that MU (or SV message). If the MU does not publish any CT1-N inputs, configure the setting as None.

In the EnerVista software, the CT Aux input setting only populates the current channels of that RxSV#.

This CT Aux input setting is active when the **SV Stream** field is set to IEC 61869-9.

This CT Aux input setting is set to AC4 and is read-only when the **SV Stream** is set to IEC 61850-9-2LE.

VT1-A/B/C

Range: None, AC1 to AC16
Default: AC5/AC6/AC7

This setting specifies the Analog Channel (per phase) that is mapped to the VT1- phase inputs. An origin to VT Phase input defines the physical measurement input to the VT bank by mapping specific AC inputs from that MU (or SV message). If the MU does not publish any VT channels, configure the setting as None.

The VT1 phase fields are active when the **SV Stream** field is set to IEC 61869-9. The VT1 phases are available if the number of **VT Channels** is 4 or below. VT2 is added if **VT Channels** is 5 or higher.

The fields are set to the defaults and are read-only when the **SV Stream** field is set to IEC 61850-9-2LE.

VT1-N

Range: None, AC1 to AC16
Default: AC8

This setting specifies the Analog Channel that is mapped to the VT Aux/neutral input. An origin to VT input defines the physical measurement input to the VT bank by mapping specific AC inputs from that MU (or SV message). If the MU does not publish any VT1-N inputs, configure the setting as None.

In the EnerVista software, the VT Aux input setting only populates the voltage channels of that RxSV#.

The VT1-N input setting is active when the **SV Stream** field is set to IEC 61869-9.

The VT1-N input setting is set to the default and is read-only when the **SV Stream** field is set to IEC 61850-9-2LE.

AC BANKS

The UR platform supports up to six AC Banks. They can be CT or VT banks (similar to **SETTINGS ⇨⇩ SYSTEM SETUP ⇨ AC INPUTS ⇨ CURRENT/VOLTAGE BANK**). That is, each AC Bank can be configured either as current or voltage (not both). If configured as current, inapplicable voltage settings (such as VT ratio, VT secondary) are inactive. Similarly, if a bank is configured as voltage, current settings (such as CT primary, CT secondary) are inactive. In addition, bank level redundancy (that is, Origin-1 and Origin-2) is supported using crosschecking of each channel signal received from two different SV streams that are connected to the same electrical point on the primary power system. A maximum 24 channels can be configured to the AC Banks.

Click the button to display or hide the fields.

The following settings are available for each AC bank.

Each Phase Origin setting consumes three phase channels Ia/Va, Ib/Vb, or Ic/Vc, and a Neutral Origin setting consumes one ground or Aux Channel In/Vn, which means that

- An AC Bank with Phase Origin1 and Neutral Origin1 settings configured consumes four channels
- An AC Bank with both Phase Origin 1 and Phase Origin 2 and both Neutral Origin 1 and Neutral Origin 2 settings configured consumes eight channels

A maximum of 24 channels can be configured to the AC Banks.

For changes in this section, restart the relay, for example using **Maintenance > Reboot Relay Command**.

Phase Origin 1, 2

Range: None, RxSV1-CT1/PHS, RxSV1-VT1/PHS to RxSV8-CT1/PHS, RxSV8-VT1/PHS

Default: None

An origin to an AC bank defines the physical measurement input to the bank by mapping specific AC inputs from a specific MU to the bank.

The UR Process Bus Module provides for the reliability of AC values for protection, metering, and oscillography by allowing duplicate origins of AC data. An origin is considered unavailable when set to None. If origin 1 is available, the relay uses the values from origin 1 for protection, metering, and oscillography. Otherwise if origin 2 is available, the relay uses the values from origin 2. If both origins are unavailable, then the bank AC values are forced to zero to prevent ambiguity of measurement.

With crosschecking, the relay can use different origins. See the **Crosschecking** setting for information regarding automatic protection blocking possibilities on loss of one or both origins.

The two-phase origins in an AC bank must be of the same type and connected to the same electrical point in the primary power system. The two origins must be two currents with the same CT settings, or two voltages with the same VT settings. The current/voltage type of the phase and auxiliary origins must also match on each AC bank. It is intended that the origin AC inputs measure the same primary quantity with the same ratio. The same ratio and connection settings are applied to both origins.

Neutral Origin 1, 2

Range: None, RxSV1-CT1/NTR, RxSV1-VT1/ NTR to RxSV8-CT1/NTR, RxSV8-VT1/ NTR

Default: None

These settings specify the field units that are the origins of the auxiliary input IN or VN. Duplicate auxiliary origins are supported in the same way as phase origins.

The two auxiliary origins in an AC bank must be of the same type. The two origins must be two currents with the same CT secondary setting, or two voltages. The current/voltage type of the phase and auxiliary origins also must match on each AC bank. It is intended that the origin AC inputs measure the same primary quantity with the same ratio. The same ratio and connection settings are applied to both origins.

Crosschecking

Range: None, Depend Origin-1 Pref, Depend Origin-2 Pref

Default: None

The crosschecking feature allows application-level redundancy by checking between two independent SV streams from the same electrical connection of the instrument transformers. In addition to the network redundancy provided by PRP/ HSR, the UR Process Bus Module allows the relay to communicate with redundant merging units.

When set to None, crosschecking is disabled. Use this on a non-protection-critical AC bank, such as one used for a synchrocheck voltage. GE strongly recommends setting it to None when redundancy is not supported at the merging unit level; otherwise the "ACBank# Orig1(2) In Use" operand status is inaccurate.

Origin preference is supported in case of discrepancy in dependability mode. This allows testing (secondary injection) or replacement of an MU that is configured to non-preferred origin without affecting protection functions since these functions are using a preferred origin stream when online. As such, dependability with Origin-1 preference allows continued use of Origin-1 in case of discrepancy between both online origin stream sampled values. Similarly, dependability with Origin-2 preference allows continued use of Origin-2 in case of discrepancy between both online origin stream sampled values.

The table shows how the Crosschecking setting, the availability of AC bank origins, and discrepancy checks determine whether protection is blocked. Blocked here means only protection elements. It does not inhibit metering, actual values, oscillography, or other functions.

When set to Depend Origin-1 Pref, protection is blocked if there is no good signal from both the Origin-1 and Origin-2 sources. When both the merging unit sources are good, the preference is given always for Origin-1. When the preferred MU sources fails, the alternate MU source is used for protection and measurement.

When set to Depend Origin-2 Pref, protection is blocked if there is no good signal from both the Origin-1 and Origin-2 sources. When both the merging unit sources are good, the preference is given always for Origin-2. When the preferred MU sources fails, the alternate MU source is used for protection and measurement.

NOTE

While switching from a preferred to non-preferred channel, the protection functions are delayed for two cycles. While switching back to a preferred channel, the protection functions are delayed for one cycle.

Table 5-20: Crosschecking and protection behavior

Crosschecking setting	Origin-1 RxSV stream status	Origin-2 RxSV stream status	Discrepancy check	Protection operation
None	Not relevant	Not relevant	No check	Normal
Depend Origin-1 Pref	Not mapped	Not mapped	No check	Normal
	Online	Online	OK / discrepant	Normal using Origin-1 stream
	Online	Offline	No check	Normal using Origin-1 stream
	Offline	Online	No check	Normal using Origin-2 stream
	Offline	Offline	No check	Blocked
Depend Origin-2 Pref	Not mapped	Not mapped	No check	Normal
	Online	Online	OK / discrepant	Normal using Origin-2 stream
	Online	Offline	No check	Normal using Origin-1 stream
	Offline	Online	No check	Normal using Origin-2 stream
	Offline	Offline	No check	Blocked

Origin1 becomes offline and switches to Origin2 for the following reasons:

- When more than three of five frame samples received are invalid or a frame with sequence number is received after three consecutive missed frames for any channel of origin.

  The reason for invalid frames can be any of the following reasons:

  – If one or more AmpSv.q or VolSv.q attribute(s) are invalid from the assigned SV frame channels to the AC bank origin

  – When "Quality Check" is set to 'Reject questionable' data, the data with q.validity = questionable is processed as invalid

  – When the relay is in-service or the test function is Disabled, the SV data with q.test set to TRUE is processed invalid

  – When received SV frames with Sim Bit TRUE, the frame is invalid unless the value of @Master/LPHD1.Sim.stVal is true (that is **Settings > Simulation > GOOSE/SV > Accept Sim GOOSE&SV** or **Settings > Simulation > Subscribe to Simulated Values > Simulation Mode** is set to Enabled)

  – If the value of @Master/LPHD1.Sim.stVal is TRUE, once a subscribed SV messages with simulation bit TRUE are received, subscribed SV messages with simulation bit FALSE are invalid until @Master/LPHD1.Sim.stVal is set to FALSE

  – SV streams with "SmpSync" value out of the following specified ranges are rejected:

    i. When the "SmpSynch Check" is set to "Global" (2), SV streams with "SmpSynch" value set to Global (2) are accepted

    ii. When the "SmpSynch Check" is set to "Local" (1), SV streams with "SmpSynch" value set to Global (2) or Local (1) are accepted

    iii. When the "SmpSynch Check" is set to "Any" (0 to 254), SV streams with "SmpSynch" value set in the range of 0 to 254 are accepted. For 7.80 version, the accepted range is 0 to 127.

- SV frames are delayed/not received for more than 1.9 power system cycles

The selected Origin quality will be the quality of the AC Bank.

If both Origins have invalid quality, then the AC Bank data is marked as invalid and does not participate in protection.

Phase/Ground CT Primary

Range: 1 to 65000 A insteps of 1

Default: 1

Enter the rated CT primary current value in Amperes. For 1000:5 and 1000:1 CTs, enter 1000.

Phase/Ground CT Secondary

Range: 1A, 5A
Default: 1A

Enter the rated CT secondary current value in Amperes. For correct operation, the CT secondary rating must match the setting (that must also correspond to the specific CT connections used).

SIGNAL SOURCES

Click the button to display or hide the fields. The first six Sources are the platform sources and can accept both current banks and voltage banks and are associated with AC bank 1 to 6. The first six sources allow current summation for phase and auxiliary CTs.

Recycle power to the relay when changing a source.

Name

Range: up to 20 alphanumeric characters
Default: SRC 1

This setting specifies an alphanumeric name for the source.

Phase CT

Range: None, B1, B2, B3, B4, B5, B6, B1+B2, ... B1+B2+B3+B4+B5+B6 or B7...B28
Default: None

This setting selects the phase CTs of an AC bank or the sum of the phase CTs of multiple AC banks to be the phase current of the source. That is, it select the AC Banks section above in the window.

If you see the message "the AC Bank x assigned...is not configured..," it means that you need to configure the AC Banks section in the software window before setting this field. The AC Bank selected can match the Origins fields and Sources, such as a Phase CT set at B**1** with Phase Origin 1 RxSV**1**-CT1/PHS and source SRC**1**. Another example is to use Phase CT set at B**2** with Phase Origin 1 RxSV**2**-CT1/PHS and source SRC**2**.

Ground CT

Range: None, B1, B2, B3, B4, B5, B6, B1+B2, ... B1+B2+B3+B4+B5+B6 or B7...B28
Default: None

This setting selects the ground CTs of an AC bank or the sum of the ground CTs of multiple AC banks to be the ground current of the source. That is, it selects the AC Banks section above in the window.

Phase VT

Range: None, B1, B2, B3, B4, B5, B6
Default: None

This setting selects the phase VTs of an AC bank to be the phase voltages of the source.

Aux VT

Range: None, B1, B2, B3, B4, B5, B6
Default: None

This setting selects the auxiliary VT input of an AC bank to be the auxiliary voltage of the source.

Alt Phase CT

Range: None, B1, B2, B3, B4, B5, B6, B1+B2, ... B1+B2+B3+B4+B5+B6 or B7...B28
Default: None

This setting is for switching between main and alternate sources. It selects the alternate phase CTs of an AC bank or the sum of the phase CTs of multiple AC banks to be the phase current of the source.

Alt Ground CT

Range: None, B1, B2, B3, B4, B5, B6, B1+B2, ... B1+B2+B3+B4+B5+B6 or B7...B28
Default: None

This setting is for switching between main and alternate sources. It selects the ground CTs of an AC bank or the sum of the ground CTs of multiple AC banks to be the ground current of the source.

Switch Alt CT

Range: FlexLogic operand
Default: Off

This setting is for switching the alternate source on or off.

Alt Phase VT

Range: None, B1, B2, B3, B4, B5, B6
Default: None

This setting is for switching between main and alternate sources. It selects the phase VTs of an AC bank to be the phase voltages of the source.

Alt Aux VT

Range: None, B1, B2, B3, B4, B5, B6
Default: None

This setting is for switching between main and alternate sources. It selects the auxiliary VT input of an AC bank to be the auxiliary voltage of the source.

Switch Alt VT

Range: FlexLogic operand
Default: Off

This setting is for switching the alternate source on or off.

5.7 FlexLogic

5.7.1 FlexLogic operands

For flexibility, the arrangement of internal digital logic combines fixed and user-programmed parameters. Logic upon which individual features are designed is fixed, and all other logic, from contact input signals through elements or combinations of elements to contact outputs, is variable. The user has complete control of all variable logic through FlexLogic. In general, the system receives analog and digital inputs that it uses to produce analog and digital outputs. The figure shows major subsystems of a generic UR-series relay involved in this process.

Figure 5-96: UR architecture overview

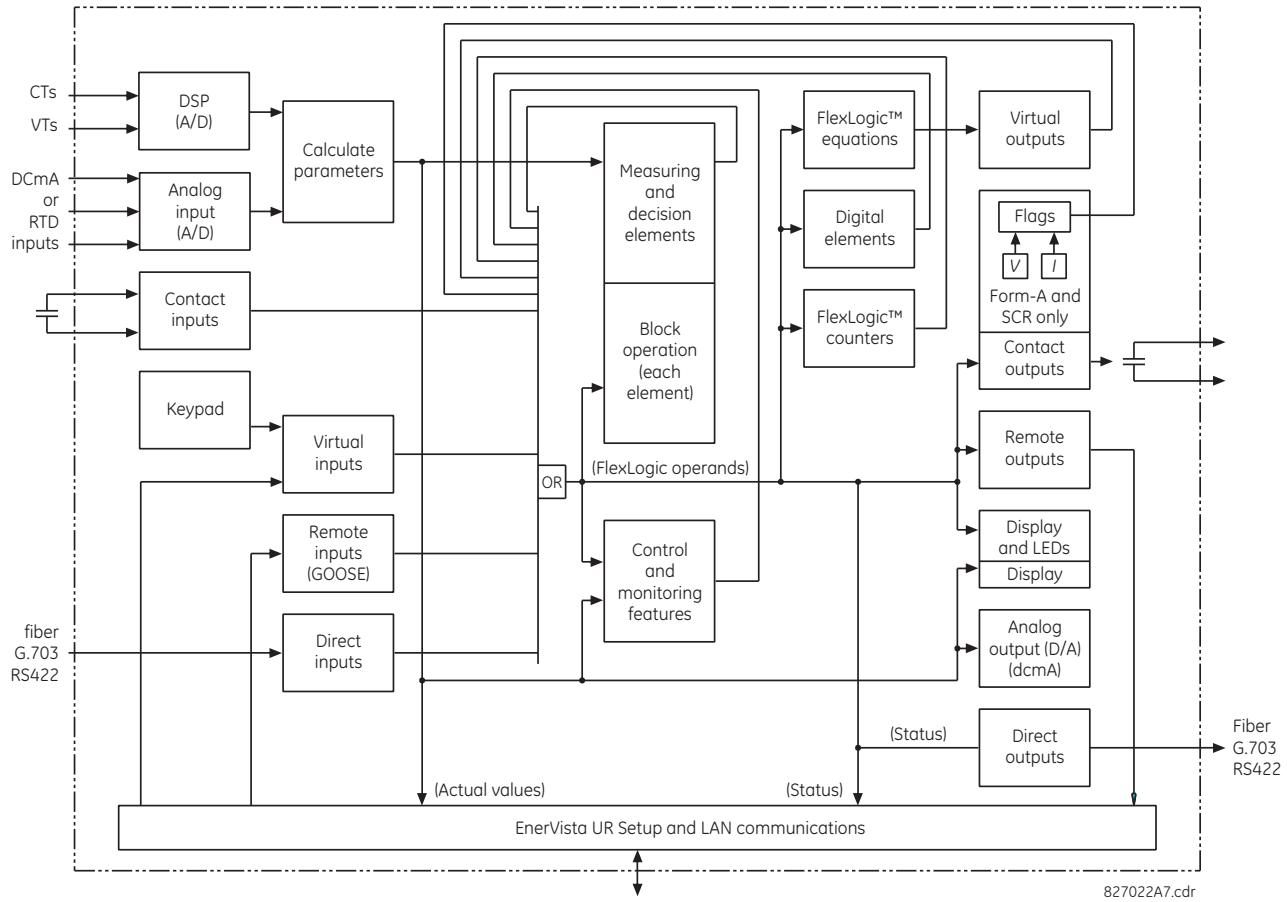

The states of all digital signals used in the C70 are represented by flags (or FlexLogic operands, which are described later in this section). A digital "1" is represented by a set flag. Any external contact change-of-state can be used to block an element from operating, as an input to a control feature in a FlexLogic equation, or to operate a contact output. The state of the contact input can be displayed locally or viewed remotely via the communications facilities provided. If a simple scheme where a contact input is used to block an element is wanted, this selection is made when programming the element. This capability also applies to the other features that set flags: elements, virtual inputs, remote inputs, schemes, and human operators.

If more complex logic than shown in the figure is required, it is implemented via FlexLogic. For example, to have the closed state of contact input H7a and the operated state of the phase undervoltage element block the operation of the phase time overcurrent element, the two control input states are programmed in a FlexLogic equation. This equation ANDs the two control inputs to produce a virtual output that is then selected when programming the phase time overcurrent to be used as a blocking input. Virtual outputs can only be created by FlexLogic equations.

Traditionally, protective relay logic has been relatively limited. Any unusual applications involving interlocks, blocking, or supervisory functions had to be hard-wired using contact inputs and outputs. FlexLogic minimizes the requirement for auxiliary components and wiring while making more complex schemes possible.

The logic that determines the interaction of inputs, elements, schemes, and outputs is field-programmable through the use of logic equations that are sequentially processed. The use of virtual inputs and outputs in addition to hardware is available internally and on the communication ports for other relays to use (distributed FlexLogic).

FlexLogic allows users to customize the relay through a series of equations that consist of operators and operands. The operands are the states of inputs, elements, schemes, and outputs. The operators are logic gates, timers, and latches (with set and reset inputs). A system of sequential operations allows any combination of operands to be assigned as inputs to

specified operators to create an output. The final output of an equation is a numbered register called a virtual output. Virtual outputs can be used as an input operand in any equation, including the equation that generates the output, as a seal-in or other type of feedback.

A FlexLogic equation consists of parameters that are either operands or operators. Operands have a logic state of 1 or 0. Operators provide a defined function, such as an AND gate or a Timer. Each equation defines the combinations of parameters to be used to set a Virtual Output flag. Evaluation of an equation results in either a 1 (=ON, or flag set) or 0 (=OFF, or flag not set). Each equation is evaluated at least four times every power system cycle.

Some types of operands are present in the relay in multiple instances, for example contact and remote inputs. These types of operands are grouped together (for presentation purposes only) on the front panel display. The table lists characteristics of the different types of operands.

Table 5-21: C70 FlexLogic operand types

Operand type	State	Example of format	Characteristics [Input Is '1' (= ON) if...]
Contact Input	On	Cont Ip On	Voltage is applied presently to the input (external contact closed)
	Off	Cont Ip Off	Voltage is not applied presently to the input (external contact open)
Contact Output (type Form-A contact only)	Contact Closed	Cont Op 1 Closed	Contact output is closed
	Current On	Cont Op 1 Ion	Current is flowing through the contact
	Voltage On	Cont Op 1 VOn	Voltage exists across the contact
	Voltage Off	Cont Op 1 VOff	Voltage does not exist across the contact
Direct Input	On	DIRECT INPUT 1 On	The direct input is presently in the ON state
Element (Analog)	Pickup	PHASE TOC1 PKP	The tested parameter is presently above the pickup setting of an element that responds to rising values or below the pickup setting of an element that responds to falling values
	Dropout	PHASE TOC1 DPO	This operand is the logical inverse of the above PKP operand
	Operate	PHASE TOC1 OP	The tested parameter has been above/below the pickup setting of the element for the programmed delay time, or has been at logic 1 and is now at logic 0 but the reset timer has not finished timing
	Block	PHASE TOC1 BLK	The output of the comparator is set to the block function
Element (Digital)	Pickup	Dig Element 1 PKP	The input operand is at logic 1
	Dropout	Dig Element 1 DPO	This operand is the logical inverse of the above PKP operand
	Operate	Dig Element 1 OP	The input operand has been at logic 1 for the programmed pickup delay time, or has been at logic 1 for this period and is now at logic 0 but the reset timer has not finished timing
Element (Digital Counter)	Higher than	Counter 1 HI	The number of pulses counted is above the set number
	Equal to	Counter 1 EQL	The number of pulses counted is equal to the set number
	Lower than	Counter 1 LO	The number of pulses counted is below the set number
Fixed	On	On	Logic 1
	Off	Off	Logic 0
RxGOOSE Boolean	On	RxGOOSE Boolean 1 On	The RxGOOSE Boolean is presently in the ON state
Virtual Input	On	Virt Ip 1 On	The virtual input is presently in the ON state
Virtual Output	On	Virt Op 1 On	The virtual output is presently in the set state (that is, evaluation of the equation that produces this virtual output results in a "1")

The following table lists the operands available for the relay. The operands can be viewed online by entering the IP address of the relay in a web browser and accessing the Device Information Menu.

Table 5-22: C70 FlexLogic operands

Operand type	Operand syntax	Operand description
ANNUNCIATOR Graphical front panel	ANY ANCTR ABNORMAL ANY ANCTR ALARMED	On for one second when any annunciator window state changes from normal to abnormal On while any annunciator window state is abnormal
CONTROL PUSHBUTTONS Enhanced and basic front panels	CONTROL PUSHBTN 1 ON CONTROL PUSHBTN 2 ON CONTROL PUSHBTN 3 ON CONTROL PUSHBTN 4 ON CONTROL PUSHBTN 5 ON CONTROL PUSHBTN 6 ON CONTROL PUSHBTN 7 ON	Control pushbutton 1 is being pressed Control pushbutton 2 is being pressed Control pushbutton 3 is being pressed Control pushbutton 4 is being pressed Control pushbutton 5 is being pressed Control pushbutton 6 is being pressed Control pushbutton 7 is being pressed
CYBERSENTRY	ROLE ADMIN ACT ROLE SUPERVISOR ACT ROLE ENGINEER ACT ROLE OPERATOR ACT ROLE OBSERVER ACT AUTHENTICATION FAIL UNAUTH FW ATTEMPT UNAUTH SETTING WRITE	Administrator role is active and is set to true when that is the case Supervisor role is active and is set to true when that is the case Engineer role is active and is set to true when that is the case Operator role is active and is set to true when that is the case Observer role is active and is set to true when that is the case Operand set for Failed Authentication self-test and alarm Operand set for firmware lock self-test and alarm Operand set for settings lock self-test and alarm
DIRECT DEVICES	DIRECT DEVICE 1On ↓ DIRECT DEVICE 16On DIRECT DEVICE 1Off ↓ DIRECT DEVICE 16Off	Flag is set, logic=1 ↓ Flag is set, logic=1 Flag is set, logic=1 ↓ Flag is set, logic=1
DIRECT INPUT/ OUTPUT CHANNEL MONITORING	DIR IO CH1 CRC ALARM DIR IO CH2 CRC ALARM DIR IO CH1 UNRET ALM DIR IO CH2 UNRET ALM	The rate of direct input messages received on channel 1 and failing the CRC exceeded the user-specified level The rate of direct input messages received on channel 2 and failing the CRC exceeded the user-specified level The rate of returned direct input/output messages on channel 1 exceeded the user-specified level (ring configurations only) The rate of returned direct input/output messages on channel 2 exceeded the user-specified level (ring configurations only)
ELEMENT: AC sources switching	SRC 1 CT SWITCH ON SRC 1 VT SWITCH ON	Source 1 Switched CT input between main and alternate Source 1 Switched VT input between main and alternate
	SRC 1 to 6	Same set of operands as shown for SRC 1
ELEMENT: Auxiliary overvoltage	AUX OV1 PKP AUX OV1 DPO AUX OV1 OP	Auxiliary overvoltage element has picked up Auxiliary overvoltage element has dropped out Auxiliary overvoltage element has operated
	AUX OV2 to 3	Same set of operands as shown for AUX OV1
ELEMENT: Automatic voltage regulator	AVR 1 CLOSE PKP AVR 1 CLOSE OP AVR 1 CLOSE DPO AVR 1 OPEN PKP AVR 1 OPEN OP AVR 1 OPEN DPO	Automatic voltage regulator 1 picked up; close command pending Automatic voltage regulator 1 issued a close command Close command of automatic voltage regulator 1 dropped out Automatic voltage regulator 1 picked up; open command pending Automatic voltage regulator 1 issued an open command Open command of automatic voltage regulator 1 dropped out
	AVR 2 to 3	Same set of operands as shown for AVR 1

Operand type	Operand syntax	Operand description
ELEMENT: Bank phase overvoltage	BANK OV 1 STG 1A PKP	Bank overvoltage element 1 picked up in phase A of stage 1
	BANK OV 1 STG 1B PKP	Bank overvoltage element 1 picked up in phase B of stage 1
	BANK OV 1 STG 1C PKP	Bank overvoltage element 1 picked up in phase C of stage 1
	BANK OV 1 STG 2A PKP	Bank overvoltage element 1 picked up in phase A of stage 2
	BANK OV 1 STG 2B PKP	Bank overvoltage element 1 picked up in phase B of stage 2
	BANK OV 1 STG 2C PKP	Bank overvoltage element 1 picked up in phase C of stage 2
	BANK OV 1 STG 3A PKP	Bank overvoltage element 1 picked up in phase A of stage 3
	BANK OV 1 STG 3B PKP	Bank overvoltage element 1 picked up in phase B of stage 3
	BANK OV 1 STG 3C PKP	Bank overvoltage element 1 picked up in phase C of stage 3
	BANK OV 1 STG 4A PKP	Bank overvoltage element 1 picked up in phase A of stage 4
	BANK OV 1 STG 4B PKP	Bank overvoltage element 1 picked up in phase B of stage 4
	BANK OV 1 STG 4C PKP	Bank overvoltage element 1 picked up in phase C of stage 4
	BANK OV 1 PKP A	Bank overvoltage element 1 picked up in phase A
	BANK OV 1 PKP B	Bank overvoltage element 1 picked up in phase B
	BANK OV 1 PKP C	Bank overvoltage element 1 picked up in phase C
	BANK OV 1 PKP	Bank overvoltage element 1 picked up
	BANK OV 1 DPO	Bank overvoltage element 1 dropped out
	BANK OV 1 STG 1A OP	Bank overvoltage element 1 operated in phase A of stage 1
	BANK OV 1 STG 1B OP	Bank overvoltage element 1 operated in phase B of stage 1
	BANK OV 1 STG 1C OP	Bank overvoltage element 1 operated in phase C of stage 1
	BANK OV 1 STG 2A OP	Bank overvoltage element 1 operated in phase A of stage 2
	BANK OV 1 STG 2B OP	Bank overvoltage element 1 operated in phase B of stage 2
	BANK OV 1 STG 2C OP	Bank overvoltage element 1 operated in phase C of stage 2
	BANK OV 1 STG 3A OP	Bank overvoltage element 1 operated in phase A of stage 3
	BANK OV 1 STG 3B OP	Bank overvoltage element 1 operated in phase B of stage 3
	BANK OV 1 STG 3C OP	Bank overvoltage element 1 operated in phase C of stage 3
	BANK OV 1 STG 4A OP	Bank overvoltage element 1 operated in phase A of stage 4
	BANK OV 1 STG 4B OP	Bank overvoltage element 1 operated in phase B of stage 4
	BANK OV 1 STG 4C OP	Bank overvoltage element 1 operated in phase C of stage 4
	BANK OV 1 OP A	Bank overvoltage element 1 operated in phase A
	BANK OV 1 OP B	Bank overvoltage element 1 operated in phase B
	BANK OV 1 OP C	Bank overvoltage element 1 operated in phase C
	BANK OV 1 OP	Bank overvoltage element 1 operated
	BANK OV 2 to 3	Same set of operands as shown for BANK OV 1
ELEMENT: Breaker flashover	BKR 1 FLSHOVR PKP A	Breaker 1 flashover element phase A has picked up
	BKR 1 FLSHOVR PKP B	Breaker 1 flashover element phase B has picked up
	BKR 1 FLSHOVR PKP C	Breaker 1 flashover element phase C has picked up
	BKR 1 FLSHOVR PKP	Breaker 1 flashover element has picked up
	BKR 1 FLSHOVR OP A	Breaker 1 flashover element phase A has operated
	BKR 1 FLSHOVR OP B	Breaker 1 flashover element phase B has operated
	BKR 1 FLSHOVR OP C	Breaker 1 flashover element phase C has operated
	BKR 1 FLSHOVR OP	Breaker 1 flashover element has operated
	BKR 1 FLSHOVR DPO A	Breaker 1 flashover element phase A has dropped out
	BKR 1 FLSHOVR DPO B	Breaker 1 flashover element phase B has dropped out
	BKR 1 FLSHOVR DPO C	Breaker 1 flashover element phase C has dropped out
	BKR 1 FLSHOVR DPO	Breaker 1 flashover element has dropped out
ELEMENT: Breaker arcing	BKR ARC 1 OP	Breaker arcing current 1 has operated
	BKR ARC 1 DPO	Breaker arcing current 1 has dropped out
	BKR ARC 1 MAX OP	Breaker arcing current 1 max interrupting current has operated
	BKR ARC 1 MAX DPO	Breaker arcing current 1 max interrupting current has dropped out
	BKR ARC 2 OP	Breaker arcing current 2 has operated
	BKR ARC 2 DPO	Breaker arcing current 2 has dropped out
	BKR ARC 2 MAX OP	Breaker arcing current 2 max interrupting current has operated
	BKR ARC 2 MAX DPO	Breaker arcing current 2 max interrupting current has dropped out
	BKR ARC 3	Same set of operands as shown for BKR ARC 1
ELEMENT: Breaker failure	BKR FAIL 1 RETRIP	Breaker failure 1 re-trip 3-phase
	BKR FAIL 1 T1 OP	Breaker failure 1 timer 1 is operated
	BKR FAIL 1 T2 OP	Breaker failure 1 timer 2 is operated
	BKR FAIL 1 T3 OP	Breaker failure 1 timer 3 is operated
	BKR FAIL 1 TRIP OP	Breaker failure 1 trip is operated
	BKR FAIL 2 to 3	Same set of operands as shown for BKR FAIL 1
ELEMENT: Breaker restrike	BRK RESTRIKE 1 OP	Breaker restrike detected in any phase of the breaker control 1 element
	BRK RESTRIKE 1 OP A	Breaker restrike detected in phase A of the breaker control 1 element
	BRK RESTRIKE 1 OP B	Breaker restrike detected in phase B of the breaker control 1 element
	BRK RESTRIKE 1 OP C	Breaker restrike detected in phase C of the breaker control 1 element
	BKR RESTRIKE 2 to 3	Same set of operands as shown for BKR RESTRIKE 1

Operand type	Operand syntax	Operand description
ELEMENT: Breaker control	BREAKER 1 OFF CMD	Breaker 1 3-pole open command/trip initiated
	BREAKER 1 ON CMD	Breaker 1 close command initiated
	BREAKER 1 ΦA BAD ST	Breaker 1 phase A bad status is detected (discrepancy between the 52/a and 52/b contacts)
	BREAKER 1 ΦA INTERM	Breaker 1 phase A intermediate status is detected (transition from one position to another)
	BREAKER 1 ΦA CLSD	Breaker 1 phase A is closed
	BREAKER 1 ΦA OPEN	Breaker 1 phase A is open
	BREAKER 1 ΦB BAD ST	Breaker 1 phase B bad status is detected (discrepancy between the 52/a and 52/b contacts)
	BREAKER 1 ΦB INTERM	Breaker 1 phase B intermediate status is detected (transition from one position to another)
	BREAKER 1 ΦB CLSD	Breaker 1 phase B is closed
	BREAKER 1 ΦB OPEN	Breaker 1 phase B is open
	BREAKER 1 ΦC BAD ST	Breaker 1 phase C bad status is detected (discrepancy between the 52/a and 52/b contacts)
	BREAKER 1 ΦC INTERM	Breaker 1 phase C intermediate status is detected (transition from one position to another)
	BREAKER 1 ΦC CLSD	Breaker 1 phase C is closed
	BREAKER 1 ΦC OPEN	Breaker 1 phase C is open
	BREAKER 1 BAD STATUS	Breaker 1 bad status is detected on any pole
	BREAKER 1 CLOSED	Breaker 1 is closed
	BREAKER 1 OPEN	Breaker 1 is open
	BREAKER 1 DISCREP	Breaker 1 has discrepancy
	BREAKER 1 TROUBLE	Breaker 1 trouble alarm
	BREAKER 1 MNL OPEN	Breaker 1 manual open
	BREAKER 1 MNL CLS	Breaker 1 manual close
	BREAKER 1 TRIP A	Breaker 1 trip phase A command
	BREAKER 1 TRIP B	Breaker 1 trip phase B command
	BREAKER 1 TRIP C	Breaker 1 trip phase C command
	BREAKER 1 ANY P OPEN	At least one pole of breaker 1 is open
	BREAKER 1 ONE P OPEN	Only one pole of breaker 1 is open
	BREAKER 1 OOS	Breaker 1 is out of service
	BREAKER 1 TAG ON	Breaker 1 tagged so manual trip and close and autoreclose are blocked
	BREAKER 1 TAG OFF	Breaker 1 not tagged
	BREAKER 1 SUBD CLSD	Breaker 1 status manually substituted to closed
	BREAKER 1 SUBD OPEN	Breaker 1 status manually substituted to open
	BREAKER 1 BYPASS ON	Breaker 1 control interlocking is manually bypassed
	BREAKER 1 BYPASS OFF	Breaker 1 control interlocking is not manually bypassed
	BREAKER 1 BLK RCLS	Breaker 1 command to manually block autoreclose
	BREAKER 1 ENA RCLS	Breaker 1 command to manually enable autoreclose
	BREAKER 2 to 3	Same set of operands as shown for BREAKER 1
ELEMENT: Capacitor control	CAP 1 IN REMOTE	Capacitor control element 1 in remote control mode
	CAP 1 IN LOCAL	Capacitor control element 1 in local control mode
	CAP 1 IN AUTO	Capacitor control element 1 in automatic mode
	CAP 1 IN MAN	Capacitor control element 1 in manual mode
	CAP 1 DISCHARGING	Capacitor 1 is discharging; asserted till discharge delay expires
	CAP 1 BKR TRIP	Capacitor 1 breaker trip command
	CAP 1 BKR CLOSE	Capacitor 1 breaker close command
	CAP 2 to 3	Same set of operands as shown for CAP 1
ELEMENT: Digital counters	Counter 1 HI	Digital counter 1 output is 'more than' comparison value
	Counter 1 EQL	Digital counter 1 output is 'equal to' comparison value
	Counter 1 LO	Digital counter 1 output is 'less than' comparison value
	Counter 2 to 8	Same set of operands as shown for Counter 1

Operand type	Operand syntax	Operand description
ELEMENT: Phase current unbalance	CUR BAL 1 STG1A PKP	Phase current unbalance element 1 picked up in phase A of stage 1
	CUR BAL 1 STG1B PKP	Phase current unbalance element 1 picked up in phase B of stage 1
	CUR BAL 1 STG1C PKP	Phase current unbalance element 1 picked up in phase C of stage 1
	CUR BAL 1 STG2A PKP	Phase current unbalance element 1 picked up in phase A of stage 2
	CUR BAL 1 STG2B PKP	Phase current unbalance element 1 picked up in phase B of stage 2
	CUR BAL 1 STG2C PKP	Phase current unbalance element 1 picked up in phase C of stage 2
	CUR BAL 1 STG3A PKP	Phase current unbalance element 1 picked up in phase A of stage 3
	CUR BAL 1 STG3B PKP	Phase current unbalance element 1 picked up in phase B of stage 3
	CUR BAL 1 STG3C PKP	Phase current unbalance element 1 picked up in phase C of stage 3
	CUR BAL 1 STG4A PKP	Phase current unbalance element 1 picked up in phase A of stage 4
	CUR BAL 1 STG4B PKP	Phase current unbalance element 1 picked up in phase B of stage 4
	CUR BAL 1 STG4C PKP	Phase current unbalance element 1 picked up in phase C of stage 4
	CUR BAL 1 PKP A	Phase current unbalance element 1 picked up in phase A
	CUR BAL 1 PKP B	Phase current unbalance element 1 picked up in phase B
	CUR BAL 1 PKP C	Phase current unbalance element 1 picked up in phase C
	CUR BAL 1 PKP	Phase current unbalance element 1 picked up
	CUR BAL 1 DPO	Phase current unbalance element 1 dropped out
	CUR BAL 1 STG1A OP	Phase current unbalance element 1 operated in phase A of stage 1
	CUR BAL 1 STG1B OP	Phase current unbalance element 1 operated in phase B of stage 1
	CUR BAL 1 STG1C OP	Phase current unbalance element 1 operated in phase C of stage 1
	CUR BAL 1 STG2A OP	Phase current unbalance element 1 operated in phase A of stage 2
	CUR BAL 1 STG2B OP	Phase current unbalance element 1 operated in phase B of stage 2
	CUR BAL 1 STG2C OP	Phase current unbalance element 1 operated in phase C of stage 2
	CUR BAL 1 STG3A OP	Phase current unbalance element 1 operated in phase A of stage 3
	CUR BAL 1 STG3B OP	Phase current unbalance element 1 operated in phase B of stage 3
	CUR BAL 1 STG3C OP	Phase current unbalance element 1 operated in phase C of stage 3
	CUR BAL 1 STG4A OP	Phase current unbalance element 1 operated in phase A of stage 4
	CUR BAL 1 STG4B OP	Phase current unbalance element 1 operated in phase B of stage 4
	CUR BAL 1 STG4C OP	Phase current unbalance element 1 operated in phase C of stage 4
	CUR BAL 1 OP A	Phase current unbalance element 1 operated in phase A
	CUR BAL 1 OP B	Phase current unbalance element 1 operated in phase B
	CUR BAL 1 OP C	Phase current unbalance element 1 operated in phase C
	CUR BAL 1 OP	Phase current unbalance element 1 operated
	CUR BAL 2 to 3	Same set of operands as shown for CUR BAL 1
ELEMENT: Time of day timer day	DAY SUNDAY	Current day is Sunday
	DAY MONDAY	Current day is Monday
	DAY TUESDAY	Current day is Tuesday
	DAY WEDNESDAY	Current day is Wednesday
	DAY THURSDAY	Current day is Thursday
	DAY FRIDAY	Current day is Friday
	DAY SATURDAY	Current day is Saturday
ELEMENT: Digital elements	Dig Element 1 PKP	Digital Element 1 is picked up
	Dig Element 1 OP	Digital Element 1 is operated
	Dig Element 1 DPO	Digital Element 1 is dropped out
	Dig Element 2 to 96	Same set of operands as shown for Dig Element 1
ELEMENT: FlexElements	FxE 1 PKP	FlexElement 1 has picked up
	FxE 1 OP	FlexElement 1 has operated
	FxE 1 DPO	FlexElement 1 has dropped out
	FxE 2 to 16	Same set of operands as shown for FxE 1
ELEMENT: Ground instantaneous overcurrent	GROUND IOC1 PKP	Ground instantaneous overcurrent 1 has picked up
	GROUND IOC1 OP	Ground instantaneous overcurrent 1 has operated
	GROUND IOC1 DPO	Ground instantaneous overcurrent 1 has dropped out
	GROUND IOC2 to 12	Same set of operands as shown for GROUND IOC 1
ELEMENT: Ground time overcurrent	GROUND TOC1 PKP	Ground time overcurrent 1 has picked up
	GROUND TOC1 OP	Ground time overcurrent 1 has operated
	GROUND TOC1 DPO	Ground time overcurrent 1 has dropped out
	GROUND TOC2 to 6	Same set of operands as shown for GROUND TOC1
ELEMENT: IED mode	IED BEH TEST	Relay in Test mode
	IED BEH TEST-BLOCKED	Relay in Test-Blocked mode
	IED BEH ON	Relay mode is On
ELEMENT: Non-volatile latches	LATCH 1 ON	Non-volatile latch 1 is ON (Logic = 1)
	LATCH 1 OFF	Non-volatile latch 1 is OFF (Logic = 0)

Operand type	Operand syntax	Operand description
	LATCH 2 to 16	Same set of operands as shown for LATCH 1
ELEMENT: Time of day timer month	MONTH JANUARY MONTH FEBRUARY MONTH MARCH MONTH APRIL MONTH MAY MONTH JUNE MONTH JULY MONTH AUGUST MONTH SEPTEMBER MONTH OCTOBER MONTH NOVEMBER MONTH DECEMBER	Current month is January Current month is February Current month is March Current month is April Current month is May Current month is June Current month is July Current month is August Current month is September Current month is October Current month is November Current month is December
ELEMENT: Negative-sequence directional overcurrent	NEG SEQ DIR OC1 FWD NEG SEQ DIR OC1 REV NEG SEQ DIR OC2 FWD NEG SEQ DIR OC2 REV	Negative-sequence directional overcurrent 1 forward has operated Negative-sequence directional overcurrent 1 reverse has operated Negative-sequence directional overcurrent 2 forward has operated Negative-sequence directional overcurrent 2 reverse has operated
ELEMENT: Negative-sequence instantaneous overcurrent	NEG SEQ IOC1 PKP NEG SEQ IOC1 OP NEG SEQ IOC1 DPO	Negative-sequence instantaneous overcurrent 1 has picked up Negative-sequence instantaneous overcurrent 1 has operated Negative-sequence instantaneous overcurrent 1 has dropped out
	NEG SEQ IOC2	Same set of operands as shown for NEG SEQ IOC1
ELEMENT: Negative-sequence overvoltage	NEG SEQ OV1 PKP NEG SEQ OV1 DPO NEG SEQ OV1 OP	Negative-sequence overvoltage element has picked up Negative-sequence overvoltage element has dropped out Negative-sequence overvoltage element has operated
	NEG SEQ OV2 to 3	Same set of operands as shown for NEG SEQ OV1
ELEMENT: Negative-sequence time overcurrent	NEG SEQ TOC1 PKP NEG SEQ TOC1 OP NEG SEQ TOC1 DPO	Negative-sequence time overcurrent 1 has picked up Negative-sequence time overcurrent 1 has operated Negative-sequence time overcurrent 1 has dropped out
	NEG SEQ TOC2	Same set of operands as shown for NEG SEQ TOC1
ELEMENT: Neutral instantaneous overcurrent	NEUTRAL IOC1 PKP NEUTRAL IOC1 OP NEUTRAL IOC1 DPO	Neutral instantaneous overcurrent 1 has picked up Neutral instantaneous overcurrent 1 has operated Neutral instantaneous overcurrent 1 has dropped out
	NEUTRAL IOC2 to 6	Same set of operands as shown for NEUTRAL IOC1
ELEMENT: Neutral overvoltage	NEUTRAL OV1 PKP NEUTRAL OV1 DPO NEUTRAL OV1 OP	Neutral overvoltage element 1 has picked up Neutral overvoltage element 1 has dropped out Neutral overvoltage element 1 has operated
	NEUTRAL OV2 to 3	Same set of operands as shown for NEUTRAL OV1
ELEMENT: Neutral time overcurrent	NEUTRAL TOC1 PKP NEUTRAL TOC1 OP NEUTRAL TOC1 DPO	Neutral time overcurrent 1 has picked up Neutral time overcurrent 1 has operated Neutral time overcurrent 1 has dropped out
	NEUTRAL TOC2 to 6	Same set of operands as shown for NEUTRAL TOC1
ELEMENT: Neutral current unbalance	NTRL CUR 1 STG1 PKP NTRL CUR 1 STG2 PKP NTRL CUR 1 STG3 PKP NTRL CUR 1 STG4 PKP NTRL CUR 1 PKP NTRL CUR 1 DPO NTRL CUR 1 STG1 OP NTRL CUR 1 STG2 OP NTRL CUR 1 STG3 OP NTRL CUR 1 STG4 OP NTRL CUR 1 OP	Neutral current unbalance element 1 picked up in stage 1 Neutral current unbalance element 1 picked up in stage 2 Neutral current unbalance element 1 picked up in stage 3 Neutral current unbalance element 1 picked up in stage 4 Neutral current unbalance element 1 picked up Neutral current unbalance element 1 dropped out Neutral current unbalance element 1 operated in stage 1 Neutral current unbalance element 1 operated in stage 2 Neutral current unbalance element 1 operated in stage 3 Neutral current unbalance element 1 operated in stage 4 Neutral current unbalance element 1 operated
	NTRL CUR 2 to 3	Same set of operands as shown for NTRL CUR 1
ELEMENT: Neutral directional overcurrent	NTRL DIR OC1 FWD NTRL DIR OC1 REV	Neutral directional overcurrent 1 forward has operated Neutral directional overcurrent 1 reverse has operated

Operand type	Operand syntax	Operand description
ELEMENT: Neutral voltage unbalance	NTRL VOLT 1 STG1 PKP	Neutral voltage unbalance element 1 picked up in stage 1
	NTRL VOLT 1 STG2 PKP	Neutral voltage unbalance element 1 picked up in stage 2
	NTRL VOLT 1 STG3 PKP	Neutral voltage unbalance element 1 picked up in stage 3
	NTRL VOLT 1 STG4 PKP	Neutral voltage unbalance element 1 picked up in stage 4
	NTRL VOLT 1 PKP	Neutral voltage unbalance element 1 picked up
	NTRL VOLT 1 DPO	Neutral voltage unbalance element 1 dropped out
	NTRL VOLT 1 STG1 OP	Neutral voltage unbalance element 1 operated in stage 1
	NTRL VOLT 1 STG2 OP	Neutral voltage unbalance element 1 operated in stage 2
	NTRL VOLT 1 STG3 OP	Neutral voltage unbalance element 1 operated in stage 3
	NTRL VOLT 1 STG4 OP	Neutral voltage unbalance element 1 operated in stage 4
	NTRL VOLT 1 OP	Neutral voltage unbalance element 1 operated
	NTRL VOLT 2 to 3	Same set of operands as shown for NTRL VOLT 1
ELEMENT: Phase directional overcurrent	PH DIR1 BLK A	Phase A directional 1 block
	PH DIR1 BLK B	Phase B directional 1 block
	PH DIR1 BLK C	Phase C directional 1 block
	PH DIR1 BLK	Phase directional 1 block
	PH DIR2	Same set of operands as shown for PH DIR1
ELEMENT: Phase instantaneous overcurrent	PHASE IOC1 PKP	At least one phase of phase instantaneous overcurrent 1 has picked up
	PHASE IOC1 OP	At least one phase of phase instantaneous overcurrent 1 has operated
	PHASE IOC1 DPO	All phases of phase instantaneous overcurrent 1 have dropped out
	PHASE IOC1 PKP A	Phase A of phase instantaneous overcurrent 1 has picked up
	PHASE IOC1 PKP B	Phase B of phase instantaneous overcurrent 1 has picked up
	PHASE IOC1 PKP C	Phase C of phase instantaneous overcurrent 1 has picked up
	PHASE IOC1 OP A	Phase A of phase instantaneous overcurrent 1 has operated
	PHASE IOC1 OP B	Phase B of phase instantaneous overcurrent 1 has operated
	PHASE IOC1 OP C	Phase C of phase instantaneous overcurrent 1 has operated
	PHASE IOC1 DPO A	Phase A of phase instantaneous overcurrent 1 has dropped out
	PHASE IOC1 DPO B	Phase B of phase instantaneous overcurrent 1 has dropped out
	PHASE IOC1 DPO C	Phase C of phase instantaneous overcurrent 1 has dropped out
	PHASE IOC2 to 12	Same set of operands as shown for PHASE IOC1
ELEMENT: Phase overvoltage	PHASE OV1 PKP	At least one phase of overvoltage 1 has picked up
	PHASE OV1 OP	At least one phase of overvoltage 1 has operated
	PHASE OV1 DPO	All phases of overvoltage 1 have dropped out
	PHASE OV1 PKP A	Phase A of overvoltage 1 has picked up
	PHASE OV1 PKP B	Phase B of overvoltage 1 has picked up
	PHASE OV1 PKP C	Phase C of overvoltage 1 has picked up
	PHASE OV1 OP A	Phase A of overvoltage 1 has operated
	PHASE OV1 OP B	Phase B of overvoltage 1 has operated
	PHASE OV1 OP C	Phase C of overvoltage 1 has operated
	PHASE OV1 DPO A	Phase A of overvoltage 1 has dropped out
	PHASE OV1 DPO B	Phase B of overvoltage 1 has dropped out
	PHASE OV1 DPO C	Phase C of overvoltage 1 has dropped out
	PHASE OV2 to 3	Same set of operands as shown for PHASE OV1
ELEMENT: Phase time overcurrent	PHASE TOC1 PKP	At least one phase of phase time overcurrent 1 has picked up
	PHASE TOC1 OP	At least one phase of phase time overcurrent 1 has operated
	PHASE TOC1 DPO	All phases of phase time overcurrent 1 have dropped out
	PHASE TOC1 PKP A	Phase A of phase time overcurrent 1 has picked up
	PHASE TOC1 PKP B	Phase B of phase time overcurrent 1 has picked up
	PHASE TOC1 PKP C	Phase C of phase time overcurrent 1 has picked up
	PHASE TOC1 OP A	Phase A of phase time overcurrent 1 has operated
	PHASE TOC1 OP B	Phase B of phase time overcurrent 1 has operated
	PHASE TOC1 OP C	Phase C of phase time overcurrent 1 has operated
	PHASE TOC1 DPO A	Phase A of phase time overcurrent 1 has dropped out
	PHASE TOC1 DPO B	Phase B of phase time overcurrent 1 has dropped out
	PHASE TOC1 DPO C	Phase C of phase time overcurrent 1 has dropped out
	PHASE TOC2 to 6	Same set of operands as shown for PHASE TOC1
	PHASE TOC1 I2t RST	All phases I^2t accumulated energy dropped below level per reset curve
	PHASE TOC2 I2t RST	All phases I^2t accumulated energy dropped below level per reset curve

Operand type	Operand syntax	Operand description
ELEMENT: Phase undervoltage	PHASE UV1 PKP PHASE UV1 OP PHASE UV1 DPO PHASE UV1 PKP A PHASE UV1 PKP B PHASE UV1 PKP C PHASE UV1 OP A PHASE UV1 OP B PHASE UV1 OP C PHASE UV1 DPO A PHASE UV1 DPO B PHASE UV1 DPO C	At least one phase of phase undervoltage 1 has picked up At least one phase of phase undervoltage 1 has operated All phases of phase undervoltage 1 have dropped out Phase A of phase undervoltage 1 has picked up Phase B of phase undervoltage 1 has picked up Phase C of phase undervoltage 1 has picked up Phase A of phase undervoltage 1 has operated Phase B of phase undervoltage 1 has operated Phase C of phase undervoltage 1 has operated Phase A of phase undervoltage 1 has dropped out Phase B of phase undervoltage 1 has dropped out Phase C of phase undervoltage 1 has dropped out
	PHASE UV2 to 3	Same set of operands as shown for PHASE UV1
ELEMENT: Selector switch	SELECTOR 1 POS Y SELECTOR 1 BIT 0 SELECTOR 1 BIT 1 SELECTOR 1 BIT 2 SELECTOR 1 STP ALARM SELECTOR 1 BIT ALARM SELECTOR 1 ALARM SELECTOR 1 PWR ALARM	Selector switch 1 is in Position Y (mutually exclusive operands) First bit of the 3-bit word encoding position of selector 1 Second bit of the 3-bit word encoding position of selector 1 Third bit of the 3-bit word encoding position of selector 1 Position of selector 1 has been pre-selected with the stepping up control input but not acknowledged Position of selector 1 has been pre-selected with the 3-bit control input but not acknowledged Position of selector 1 has been pre-selected but not acknowledged Position of selector switch 1 is undetermined or restored from memory when the relay powers up and synchronizes to the three-bit input
	SELECTOR 2	Same set of operands as shown for SELECTOR 1
ELEMENT: Setting group	SETTING GROUP ACT 1 SETTING GROUP ACT 2 SETTING GROUP ACT 3 SETTING GROUP ACT 4 SETTING GROUP ACT 5 SETTING GROUP ACT 6	Setting group 1 is active Setting group 2 is active Setting group 3 is active Setting group 4 is active Setting group 5 is active Setting group 6 is active
ELEMENT: Disturbance detector	SRC1 50DD OP SRC2 50DD OP SRC3 50DD OP SRC4 50DD OP SRC5 50DD OP SRC6 50DD OP	Source 1 disturbance detector has operated Source 2 disturbance detector has operated Source 3 disturbance detector has operated Source 4 disturbance detector has operated Source 5 disturbance detector has operated Source 6 disturbance detector has operated
ELEMENT: VTFF (Voltage transformer fuse failure)	SRC1 VT FF OP SRC1 VT FF DPO SRC1 VT FF VOL LOSS SRC1 VT FF ALARM	Source 1 VT fuse failure detector has operated Source 1 VT fuse failure detector has dropped out Source 1 has lost voltage signals (V2 below 10% and V1 below 5% of nominal) Source 1 has triggered a VT fuse failure alarm
	SRC1 VT NEU WIRE OPEN	Source 1 VT neutral wire open detected. When the VT is connected in Delta, do not enable this function because there is no neutral wire for Delta connected VT.
	SRC2 VT FUSE FAIL to SRC6	Same set of operands as shown for SRC1 VT FF

Operand type	Operand syntax	Operand description
ELEMENT: Disconnect switch	SWITCH 1 OFF CMD	Disconnect switch 1 open command initiated
	SWITCH 1 ON CMD	Disconnect switch 1 close command initiated
	SWITCH 1 CLOSED	Disconnect switch 1 is closed
	SWITCH 1 OPEN	Disconnect switch 1 is open
	SWITCH 1 DISCREP	Disconnect switch 1 has discrepancy
	SWITCH 1 TROUBLE	Disconnect switch 1 trouble alarm
	SWITCH 1 ΦA CLSD	Disconnect switch 1 phase A is closed
	SWITCH 1 ΦA OPEN	Disconnect switch 1 phase A is open
	SWITCH 1 ΦA BAD ST	Disconnect switch 1 phase A bad status is detected (discrepancy between the 89/a and 89/b contacts)
	SWITCH 1 ΦA INTERM	Disconnect switch 1 phase A intermediate status is detected (transition from one position to another)
	SWITCH 1 ΦB CLSD	Disconnect switch 1 phase B is closed
	SWITCH 1 ΦB OPEN	Disconnect switch 1 phase B is open
	SWITCH 1 ΦB BAD ST	Disconnect switch 1 phase B bad status is detected (discrepancy between the 89/a and 89/b contacts)
	SWITCH 1 ΦB INTERM	Disconnect switch 1 phase B intermediate status is detected (transition from one position to another)
	SWITCH 1 ΦC CLSD	Disconnect switch 1 phase C is closed
	SWITCH 1 ΦC OPEN	Disconnect switch 1 phase C is open
	SWITCH 1 ΦC BAD ST	Disconnect switch 1 phase C bad status is detected (discrepancy between the 89/a and 89/b contacts)
	SWITCH 1 ΦC INTERM	Disconnect switch 1 phase C intermediate status is detected (transition from one position to another)
	SWITCH 1 BAD STATUS	Disconnect switch 1 bad status is detected on any pole
	SWITCH 1 TAG ON	Switch 1 tagged so manual trip and close is blocked
	SWITCH 1 TAG OFF	Switch 1 not tagged
	SWITCH 1 SUBD CLSD	Switch 1 status manually substituted to closed
	SWITCH 1 SUBD OPEN	Switch 1 status manually substituted to open
	SWITCH 1 BYPASS ON	Switch 1 control interlocking is bypassed manually
	SWITCH 1 BYPASS OFF	Switch 1 control interlocking is not bypassed manually
	SWITCH 2 to 12	Same set of operands as shown for SWITCH 1
ELEMENT: Teleprotection channel tests	TELEPRO CH1 FAIL	Channel 1 failed
	TELEPRO CH2 FAIL	Channel 2 failed
	TELEPRO CH1 ID FAIL	The ID check for a peer relay on channel 1 has failed
	TELEPRO CH2 ID FAIL	The ID check for a peer relay on channel 2 has failed
	TELEPRO CH1 CRC FAIL	CRC detected packet corruption on channel 1
	TELEPRO CH2 CRC FAIL	CRC detected packet corruption on channel 2
	TELEPRO CH1 PKT LOST	CRC detected lost packet on channel 1
	TELEPRO CH2 PKT LOST	CRC detected lost packet on channel 2
ELEMENT: Teleprotection inputs/outputs	TELEPRO INPUT 1-1 On ↓ TELEPRO INPUT 1-16 On TELEPRO INPUT 2-1 On ↓ TELEPRO INPUT 2-16 On	Flag is set, Logic =1 ↓ Flag is set, Logic =1 Flag is set, Logic =1 ↓ Flag is set, Logic =1
ELEMENT: Thermal overload protection	THERMAL PROT 1 PKP	Thermal overload protection 1 picked up
	THERMAL PROT 1 OP	Thermal overload protection 1 operated
	THERMAL PROT 2	Same set of operands as shown for THERMAL PROT 1
ELEMENT: Time of day timer	TIME OF DAY 1 OFF	Time of day timer 1 is off
	TIME OF DAY 1 ON	Time of day timer 1 is on
	TIME OF DAY 1 START	One-second pulse at set time of day timer 1 start time
	TIME OF DAY 1 STOP	One-second pulse at set time of day timer 1 stop time
	TIME OF DAY 2 to 5	Same set of operands as shown for TIME OF DAY 1
ELEMENT: Trip bus	TRIP BUS 1 PKP	Asserted when the trip bus 1 element picks up
	TRIP BUS 1 OP	Asserted when the trip bus 1 element operates
	TRIP BUS 2 to 6	Same set of operands as shown for TRIP BUS 1

Operand type	Operand syntax	Operand description
ELEMENT: Voltage differential	VOLT DIF 1 STG1A PKP	Voltage differential element 1 picked up in phase A of stage 1
	VOLT DIF 1 STG1B PKP	Voltage differential element 1 picked up in phase B of stage 1
	VOLT DIF 1 STG1C PKP	Voltage differential element 1 picked up in phase C of stage 1
	VOLT DIF 1 STG2A PKP	Voltage differential element 1 picked up in phase A of stage 2
	VOLT DIF 1 STG2B PKP	Voltage differential element 1 picked up in phase B of stage 2
	VOLT DIF 1 STG2C PKP	Voltage differential element 1 picked up in phase C of stage 2
	VOLT DIF 1 STG3A PKP	Voltage differential element 1 picked up in phase A of stage 3
	VOLT DIF 1 STG3B PKP	Voltage differential element 1 picked up in phase B of stage 3
	VOLT DIF 1 STG3C PKP	Voltage differential element 1 picked up in phase C of stage 3
	VOLT DIF 1 STG4A PKP	Voltage differential element 1 picked up in phase A of stage 4
	VOLT DIF 1 STG4B PKP	Voltage differential element 1 picked up in phase B of stage 4
	VOLT DIF 1 STG4C PKP	Voltage differential element 1 picked up in phase C of stage 4
	VOLT DIF 1 PKP A	Voltage differential element 1 picked up in phase A
	VOLT DIF 1 PKP B	Voltage differential element 1 picked up in phase B
	VOLT DIF 1 PKP C	Voltage differential element 1 picked up in phase C
	VOLT DIF 1 PKP	Voltage differential element 1 picked up
	VOLT DIF 1 DPO	Voltage differential element 1 dropped out
	VOLT DIF 1 STG1A OP	Voltage differential element 1 operated in phase A of stage 1
	VOLT DIF 1 STG1B OP	Voltage differential element 1 operated in phase B of stage 1
	VOLT DIF 1 STG1C OP	Voltage differential element 1 operated in phase C of stage 1
	VOLT DIF 1 STG2A OP	Voltage differential element 1 operated in phase A of stage 2
	VOLT DIF 1 STG2B OP	Voltage differential element 1 operated in phase B of stage 2
	VOLT DIF 1 STG2C OP	Voltage differential element 1 operated in phase C of stage 2
	VOLT DIF 1 STG3A OP	Voltage differential element 1 operated in phase A of stage 3
	VOLT DIF 1 STG3B OP	Voltage differential element 1 operated in phase B of stage 3
	VOLT DIF 1 STG3C OP	Voltage differential element 1 operated in phase C of stage 3
	VOLT DIF 1 STG4A OP	Voltage differential element 1 operated in phase A of stage 4
	VOLT DIF 1 STG4B OP	Voltage differential element 1 operated in phase B of stage 4
	VOLT DIF 1 STG4C OP	Voltage differential element 1 operated in phase C of stage 4
	VOLT DIF 1 OP A	Voltage differential element 1 operated in phase A
	VOLT DIF 1 OP B	Voltage differential element 1 operated in phase B
	VOLT DIF 1 OP C	Voltage differential element 1 operated in phase C
	VOLT DIF 1 OP	Voltage differential element 1 operated
	VOLT DIF 2 to 3	Same set of operands as shown for VOLT DIF 1
FIXED OPERANDS	Off	Logic = 0. Does nothing and can be used as a delimiter in an equation list; used as 'Disable' by other features.
	On	Logic = 1. Can be used as a test setting.
INPUTS/OUTPUTS: Contact inputs	Cont Ip 1 On	(does not appear unless ordered)
	Cont Ip 2 On	(does not appear unless ordered)
	↓	↓
	Cont Ip 1 Off	(does not appear unless ordered)
	Cont Ip 2 Off	(does not appear unless ordered)
	↓	↓
	Cont Ip 120 On	(does not appear unless ordered)
	Cont Ip 120 Off	(does not appear unless ordered)
INPUTS/OUTPUTS: Contact outputs, current (from detector on form-A output only)	Cont Op 1 IOn	(does not appear unless ordered)
	Cont Op 2 IOn	(does not appear unless ordered)
	↓	↓
	Cont Op 72 IOn	(does not appear unless ordered)
INPUTS/OUTPUTS: Contact outputs, voltage (from detector on form-A output only)	Cont Op 1 VOn	(does not appear unless ordered)
	Cont Op 2 VOn	(does not appear unless ordered)
	↓	↓
	Cont Op 72 VOn	(does not appear unless ordered)
	Cont Op 1 VOff	(does not appear unless ordered)
	Cont Op 2 VOff	(does not appear unless ordered)
	↓	↓
	Cont Op 72 VOff	(does not appear unless ordered)
INPUTS/OUTPUTS: Direct inputs	DIRECT INPUT 1 On	Flag is set, logic=1
	↓	↓
	DIRECT INPUT 32 On	Flag is set, logic=1

5

Operand type	Operand syntax	Operand description
INPUTS/OUTPUTS: RxGOOSE DPS	RxG DPS 1 BAD RxG DPS 1 INTERM RxG DPS 1 OFF RxG DPS 1 ON	Asserted while the RxGOOSE double-point status input is in the bad state Asserted while the RxGOOSE double-point status input is in the intermediate state Asserted while the RxGOOSE double-point status input is off Asserted while the RxGOOSE double-point status input is on
	RxG DPS 2 to 5	Same set of operands as per RxG DPS 1
INPUTS/OUTPUTS: RxGOOSE Booleans	RxG Bool 1 On RxG Bool 2 On RxG Bool 3 On ↓ RxG Bool 256 On	Flag is set, logic=1 Flag is set, logic=1 Flag is set, logic=1 ↓ Flag is set, logic=1
INPUTS/OUTPUTS: Virtual inputs	Virt Ip 1 On Virt Ip 2 On Virt Ip 3 On ↓ Virt Ip 128 On	Flag is set, logic=1 Flag is set, logic=1 Flag is set, logic=1 ↓ Flag is set, logic=1
INPUTS/OUTPUTS: Virtual outputs	Virt Op 1 On Virt Op 2 On Virt Op 3 On ↓ Virt Op 128 On	Flag is set, logic=1 Flag is set, logic=1 Flag is set, logic=1 ↓ Flag is set, logic=1
LED INDICATORS: Enhanced and basic front panels	LED IN SERVICE LED TROUBLE LED TEST MODE LED TRIP LED ALARM LED PICKUP LED VOLTAGE LED CURRENT LED FREQUENCY LED OTHER LED PHASE A LED PHASE B LED PHASE C LED NEUTRAL/GROUND	Asserted when the front panel IN SERVICE LED is on Asserted when the front panel TROUBLE LED is on Asserted when the front panel TEST MODE LED is on Asserted when the front panel TRIP LED is on Asserted when the front panel ALARM LED is on Asserted when an element picks up and to turn PICKUP LED on Asserted when a voltage element involved and to turn VOLTAGE LED on Asserted when a current element involved and to turn CURRENT LED on Asserted when a frequency element involved and to turn FREQUENCY LED on Asserted when a composite element involved and to turn OTHER LED on Asserted when phase A involved and to turn PHASE A LED on Asserted when phase B involved and to turn PHASE B LED on Asserted when phase C involved and to turn PHASE C LED on Asserted when a neutral or ground element involved and to turn NEUTRAL/ GROUND LED on
LED INDICATORS: Graphical front panel	LED IN SERVICE LED TROUBLE LED TEST MODE LED TRIP LED ALARM LED PICKUP LED VOLTAGE LED CURRENT LED FREQUENCY LED OTHER LED PHASE A LED PHASE B LED PHASE C LED NEUTRAL/GROUND	Asserted when the front panel IN SERVICE LED is on Asserted when the front panel TROUBLE LED is on Asserted when the front panel TEST MODE LED is on Asserted when the front panel TRIP LED is on Asserted when the front panel ALARM LED is on Asserted when an element picks up and to turn Event Cause LED 1 on by default Asserted when a voltage element involved and to turn Event Cause LED 2 on by default Asserted when a current element involved and to turn Event Cause LED 3 on by default Asserted when a frequency element involved and to turn Event Cause LED 4 on by default Asserted when a composite element involved and to turn Event Cause LED 5 on by default Asserted when phase A involved and to turn Event Cause LED 6 on by default Asserted when phase B involved and to turn Event Cause LED 7 on by default Asserted when phase C involved and to turn Event Cause LED 8 on by default Asserted when a neutral or ground element involved and to turn Event Cause LED 9 on by default
LED INDICATORS: LED test	LED TEST IN PROGRESS	An LED test has been initiated and has not finished
LED INDICATORS: User-programmable LEDs Enhanced and basic front panels	LED USER 1	Asserted when user-programmable LED 1 is on
	LED USER 2 to 48	The operand above is available for user-programmable LEDs 2 through 48

Operand type	Operand syntax	Operand description
LED INDICATORS: User-programmable LEDs Graphical front panel	EVENT CAUSE LED 1	Asserted when event cause LED 1 is on
	EVENT CAUSE LED 2 to 9	Same operand as EVENT CAUSE LED 1
PASSWORD SECURITY	ACCESS LOC SETG OFF ACCESS LOC SETG ON ACCESS LOC CMND OFF ACCESS LOC CMND ON ACCESS REM SETG OFF ACCESS REM SETG ON ACCESS REM CMND OFF ACCESS REM CMND ON UNAUTHORIZED ACCESS	Asserted when local setting access is disabled Asserted when local setting access is enabled Asserted when local command access is disabled Asserted when local command access is enabled Asserted when remote setting access is disabled Asserted when remote setting access is enabled Asserted when remote command access is disabled Asserted when remote command access is enabled Asserted when a password entry fails while accessing a password protected level of the C70
PROCESS BUS MODULE (order code 85, 86, 87)	PBEthPort-1 Offline RxSV1 On RxSV1 Off RxSV1 Lost RxSV1 Delay Alarm RxSV1 SimBit On RxSV1 SynChk Fail RxSV1 QualChk Fail Delayed Processing RxSV1 Processing Fail ACBank1 Orig1 in Use ACBank1 Orig2 in Use SV TRBL PARTIAL BLK SV TRBL GLOBAL BLK SV TRBL Cont Op BLKD	Process Bus Module port 1 failure RxSV1 stream is online (messages are received and accepted) RxSV1 stream is offline (SV are received but not accepted or SV frames are not received) RxSV1 stream is completely lost (SV stream frames are not received) RxSV1 stream message that delay exceeds the configured delay RxSV1 messages are received with simulation bit TRUE, while "Accept Sim GOOSE&SV" setting is Enabled RxSV1 message that the synchronization source check failed RxSV1 message that at least one channel quality check failed Analog data from at least one of the SV streams is delayed in oscillography record No frame received from RxSV# stream or received sample processing failed ACBank1 is using Origin1 SV stream ACBank1 is using Origin2 SV stream Partial blocking of UR elements applied due to SV stream trouble Global blocking of UR elements applied due to SV stream trouble Contact outputs are blocked due to SV stream trouble
RxGOOSE	RxGOOSE 1 On ↓ RxGOOSE 64 On	Flag is set, logic=1 ↓ Flag is set, logic=1
	RxGOOSE 1 Off ↓ RxGOOSE 64 Off	Flag is set, logic=1 ↓ Flag is set, logic=1
	<RxGOOSE Boolean1 ID> On <RxGOOSE DPS1 ID> Bad <RxGOOSE DPS1 ID> Interm <RxGOOSE DPS1 ID> Off <RxGOOSE DPS1 ID> On RxGOOSE INVLD ON RxGOOSE QUES ON	Replace bracketed text with RxGOOSE Boolean1 status of "true" Replace bracketed text with RxGOOSE DPS1 status of "bad-state" Replace bracketed text with RxGOOSE DPS1 status is "intermediate-state" Replace bracketed text with RxGOOSE DPS1 status is "off" Replace bracketed text with RxGOOSE DPS1 status is "on" One or more Rx GOOSE Inputs are received with Invalid quality One or more Rx GOOSE Inputs are received with questionable quality
RESETTING	RESET OP RESET OP (COMMS) RESET OP (OPERAND) RESET OP (PUSHBUTTON) RESET ANCTR OP RESET ANCTR OP(OPRD) RESET ANCTR OP(MNUL)	Reset command is operated (set by all three operands below) Communications source of the reset command Operand (assigned in the **INPUTS/OUTPUTS ⇨⇩ RESETTING** menu) source of the reset command Reset key (pushbutton) source of the reset command Reset annunciator command is operated (set by any operands below) Reset operand (assigned in **INPUTS/OUTPUTS ⇨⇩ RESETTING ANNUNCIATOR** menu) source of the reset annunciator command Reset manual (pushbutton or EnerVista software) source of the reset annunciator command

Operand type	Operand syntax	Operand description
SELF-DIAGNOSTICS (See Relay Self-tests descriptions in Chapter 7: Commands and Targets)	ANY MAJOR ERROR	Any of the major self-test errors generated (major error)
	ANY MINOR ERROR	Any of the minor self-test errors generated (minor error)
	ANY SELF-TESTS	Any self-test errors generated (generic, any error)
	BATTERY FAIL	The battery is weak or not functioning. Replace as outlined in the Maintenance chapter.
	CLOCK UNSYNCHRONIZED	Relay is not synchronized to the international time standard
	DIRECT DEVICE OFF	A direct device is configured but not connected
	DIRECT RING BREAK	The Direct I/O settings is for a connection that is not in a ring
	EQUIPMENT MISMATCH	The configuration of modules does not match the stored order code
	FLEXLOGIC ERR TOKEN	A FlexLogic equation is incorrect
	IRIG-B FAILURE	"Bad IRIG-B Signal" self-test. See Chapter 7: Commands and Targets.
	LATCHING OUT ERROR	A difference is detected between the desired and actual latch contact state
	MAINTENANCE ALERT	A subset of the minor self-test errors generated, see Chapter 7
	FIRST ETHERNET FAIL	Link failure detected. See description in Chapter 7: Commands and Targets.
	PROCESS BUS FAILURE	See description in Chapter 7: Commands and Targets
	PTP FAILURE	"Bad PTP Signal" self-test as described in Chapter 7
	RxGOOSE OFF	One or more GOOSE messages are not being received
	RRTD COMM FAIL	See description in Chapter 7: Commands and Targets
	SECOND ETHERNET FAIL	See description in Chapter 7: Commands and Targets
	THIRD ETHERNET FAIL	See description in Chapter 7: Commands and Targets
	SNTP FAILURE	SNTP server is not responding
	SYSTEM EXCEPTION	See description in Chapter 7: Commands and Targets
	TEMP MONITOR	Monitors ambient temperature and maximum operating temperature
	UNIT NOT PROGRAMMED	The product **SETUP > INSTALLATION > RELAYS SETTINGS** setting is not programmed
	SETTING CHANGED	Any device settings changed over any available interface; operand is asserted for at least one second and then self-reset
	PROCESS BUS PTP FAILURE	No grandmaster clock available on any of the Process Bus Module ports
	CLOCK MISMATCH	Process Bus Module and main CPU clocks are free-running independently and the clocks are deviating more than 100 micro seconds. Resets when the deviation is below 100 micro seconds.
	PB CLOCK UNSYNCHRONIZED	Process Bus Module clock is free-running, that is, when both PTP grandmaster clock on Process Bus Module and one pulse per second (PPS) from main CPU are not available. Resets when any of the references is available.
SIMULATION	TxGOOSE SIM ON	Sim bit enabled in all Tx GOOSE
	IED IN SIM MODE	Relay is in simulation mode and accepts simulated GOOSE and SV values
TEMPERATURE MONITOR	TEMP MONITOR	Asserted while the ambient temperature is greater than the maximum operating temperature (80°C)
USER-PROGRAMMABLE PUSHBUTTONS	PUSHBUTTON 1 ON	Pushbutton number 1 is in the "On" position
	PUSHBUTTON 1 OFF	Pushbutton number 1 is in the "Off" position
	ANY PB ON	Any of 12 pushbuttons is in the "On" position
	PUSHBUTTON 2 to 6, 12, 16, depending on front panel	Same set of operands as PUSHBUTTON 1

Some operands can be re-named. These are the names of the breakers in the breaker control feature, the ID (identification) of contact inputs and outputs, the ID of virtual inputs, and the ID of virtual outputs. If the user changes the default name or ID of any of these operands, the assigned name appears in the relay list of operands. The default names are shown in the FlexLogic operands table.

The characteristics of the logic gates are tabulated in the following table, and the operators available in FlexLogic are listed in the FlexLogic operators table.

Table 5-23: FlexLogic gate characteristics

Gates	Number of inputs	Output is '1' (= ON) if...
NOT	1	input is '0'
OR	2 to 16	any input is '1'
AND	2 to 16	all inputs are '1'
NOR	2 to 16	all inputs are '0'
NAND	2 to 16	any input is '0'
XOR	2	only one input is '1'

Table 5-24: FlexLogic operators

Type	Syntax	Description	Notes
Editor	INSERT	Insert a parameter in an equation list	
	DELETE	Delete a parameter from an equation list	
End	END	The first END encountered signifies the last entry in the list of processed FlexLogic parameters	
One-shot	POSITIVE ONE SHOT	One shot that responds to a positive going edge	A 'one shot' refers to a single input gate that generates a pulse in response to an edge on the input. The output from a 'one shot' is True (positive) for only one pass through the FlexLogic equation. There is a maximum of 64 'one shots.'
	NEGATIVE ONE SHOT	One shot that responds to a negative going edge	
	DUAL ONE SHOT	One shot that responds to both the positive and negative going edges	
Logic gate	NOT	Logical NOT	Operates on the previous parameter
	OR(2) ↓ OR(16)	2 input OR gate ↓ 16 input OR gate	Operates on the 2 previous parameters ↓ Operates on the 16 previous parameters
	AND(2) ↓ AND(16)	2 input AND gate ↓ 16 input AND gate	Operates on the 2 previous parameters ↓ Operates on the 16 previous parameters
	NOR(2) ↓ NOR(16)	2 input NOR gate ↓ 16 input NOR gate	Operates on the 2 previous parameters ↓ Operates on the 16 previous parameters
	NAND(2) ↓ NAND(16)	2 input NAND gate ↓ 16 input NAND gate	Operates on the 2 previous parameters ↓ Operates on the 16 previous parameters
	XOR(2)	2 input Exclusive OR gate	Operates on the 2 previous parameters
	LATCH (S,R)	Latch (set, reset): reset-dominant	The parameter preceding LATCH(S,R) is the reset input. The parameter preceding the reset input is the set input.
Timer	TIMER 1 ↓ TIMER 32	Timer set with FlexLogic timer 1 settings ↓ Timer set with FlexLogic timer 32 settings	The timer is started by the preceding parameter. The output of the timer is TIMER #.
Assign virtual output	= Virt Op 1 ↓ = Virt Op 128	Assigns previous FlexLogic operand to virtual output 1 ↓ Assigns previous FlexLogic operand to virtual output 128	The virtual output is set by the preceding parameter

5.7.2 FlexLogic rules

When forming a FlexLogic equation, the sequence in the linear array of parameters must follow these general rules:

1. Operands must precede the operator that uses the operands as inputs.
2. Operators have only one output. The output of an operator must be used to create a virtual output if it is to be used as an input to two or more operators.
3. Assigning the output of an operator to a virtual output terminates the equation.
4. A timer operator (for example, "TIMER 1") or virtual output assignment (for example, " = Virt Op 1") can be used once only. If this rule is broken, a syntax error is declared.

5.7.3 FlexLogic evaluation

Each equation is evaluated in the ascending order in which the parameters have been entered.

NOTE

FlexLogic provides built-in latches that by definition have a memory action, remaining in the set state after the set input has been asserted. These built-in latches are reset dominant, meaning that if logical "1" is applied to both set and reset entries simultaneously, then the output of the latch is logical "0." However, they are volatile, meaning that they reset upon removal of control power.

When making changes to FlexLogic entries in the settings, all FlexLogic equations are re-compiled whenever any new FlexLogic entry value is entered, and as a result of the re-compile all latches are reset automatically.

To implement FlexLogic using a graphical user interface, see the FlexLogic Design and Monitoring using Engineer section in the previous chapter.

5.7.4 FlexLogic example

This section provides an example of logic implementation for a typical application. The sequence of steps is important to minimize the work to develop the relay settings. Note that the example in the following figure demonstrates the procedure, not to solve a specific application situation.

Note that there is also a graphical interface with which to draw logic and populate FlexLogic equation entries. See the Engineer content at the end of the previous chapter.

In the example, it is assumed that logic has already been programmed to produce virtual outputs 1 and 2, and is only a part of the full set of equations used. When using FlexLogic, it is important to make a note of each virtual output used; a virtual output designation (1 to 128) can be assigned only once.

Figure 5-97: Logic example

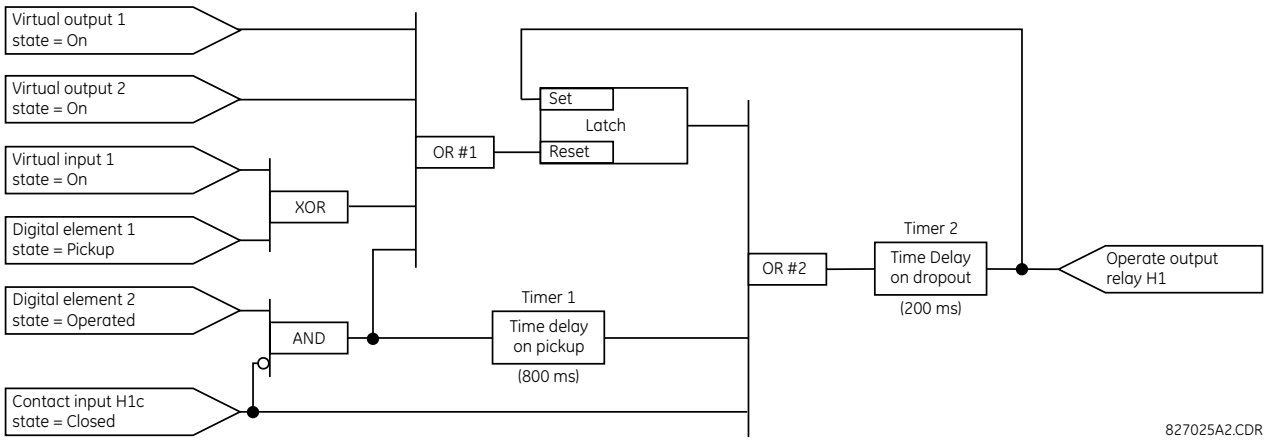

1. Inspect the example logic diagram to determine if the required logic can be implemented with the FlexLogic operators. If this is not possible, the logic must be altered until this condition is satisfied. Once done, count the inputs to each gate to verify that the number of inputs does not exceed the FlexLogic limits, which is unlikely but possible. If the number of inputs is too high, subdivide the inputs into multiple gates to produce an equivalent. For example, if 25 inputs to an AND gate are required, connect Inputs 1 through 16 to AND(16), 17 through 25 to AND(9), and the outputs from these two gates to AND(2).

   Inspect each operator between the initial operands and final virtual outputs to determine if the output from the operator is used as an input to more than one following operator. If so, the operator output must be assigned as a virtual output.

   For the example shown, the output of the AND gate is used as an input to both OR#1 and Timer 1, and must therefore be made a virtual output and assigned the next available number (that is, Virtual Output 3). The final output must also be assigned to a virtual output as virtual output 4, which is programmed in the contact output section to operate relay H1 (that is, contact output H1).

   Therefore, the required logic can be implemented with two FlexLogic equations with outputs of virtual output 3 and virtual output 4, shown as follows.

Figure 5-98: Logic example with virtual outputs

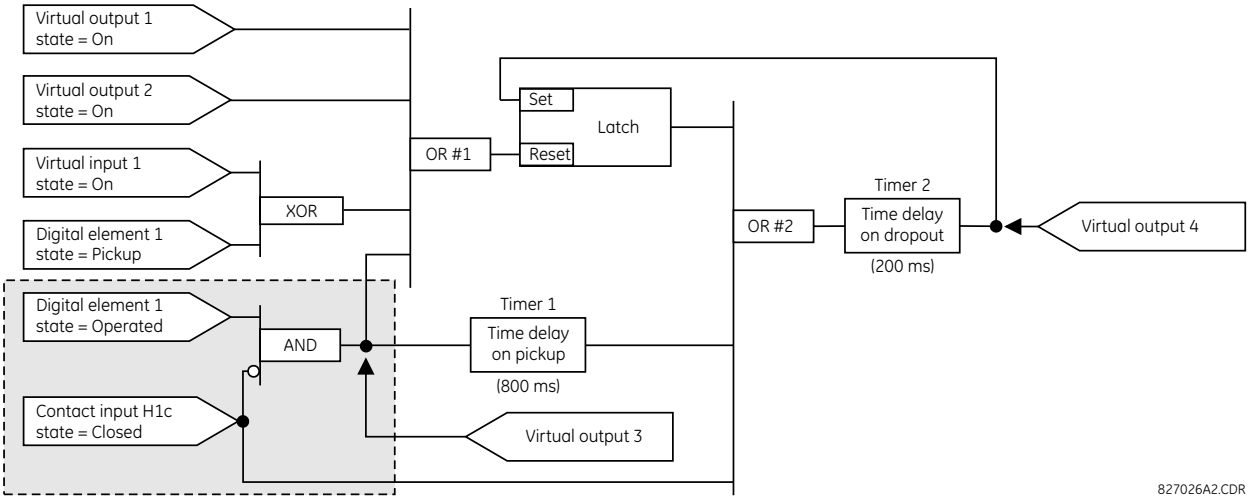

2. Prepare a logic diagram for the equation to produce virtual output 3, as this output is used as an operand in the virtual output 4 equation (create the equation for every output that is used as an operand first, so that when these operands are required they already have been evaluated and assigned to a specific virtual output). The logic for virtual output 3 is shown as follows with the final output assigned.

Figure 5-99: Logic for virtual output 3

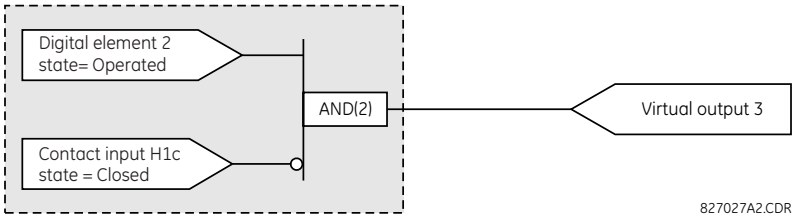

3. Prepare a logic diagram for virtual output 4, replacing the logic ahead of virtual output 3 with a symbol identified as virtual output 3, shown as follows.

Figure 5-100: Logic for virtual output 4

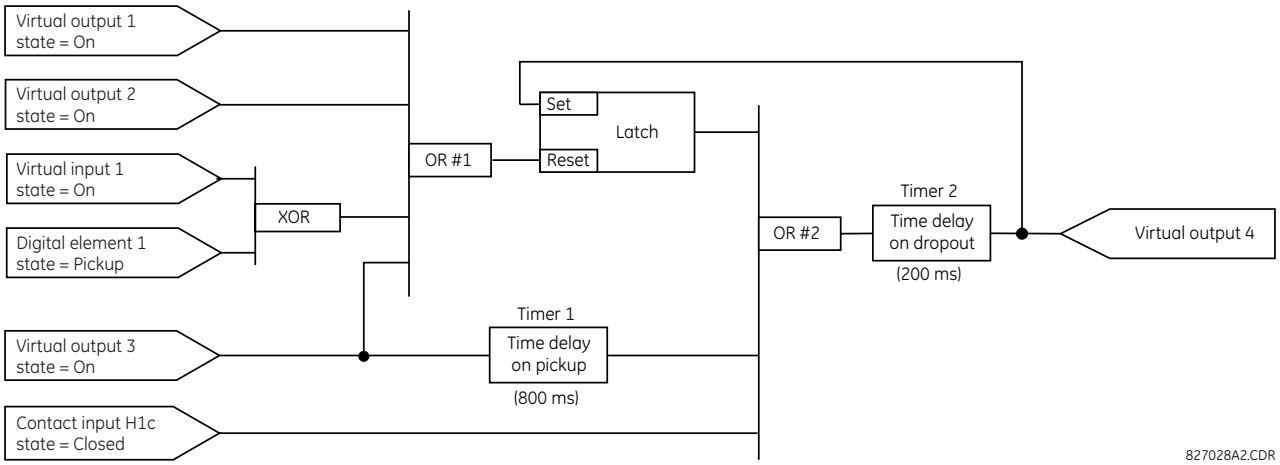

4. Program the FlexLogic equation for virtual output 3 by translating the logic into available FlexLogic parameters. The equation is formed one parameter at a time until the required logic is complete. It is generally easier to start at the output end of the equation and work back towards the input, as shown in the following steps. It is also recommended

to list operator inputs from bottom to top. For demonstration, the final outputs are arbitrarily identified as parameter 99, and each preceding parameter decremented by one in turn. Until accustomed to using FlexLogic, it is suggested that a worksheet with a series of cells marked with the arbitrary parameter numbers be prepared shown as follows.

Figure 5-101: FlexLogic worksheet

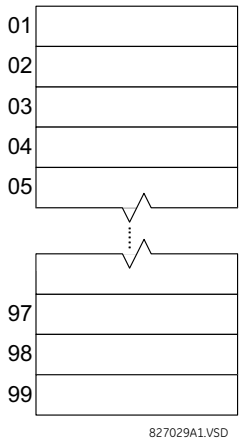

5. Following the procedure outlined, start with parameter 99, as follows:
   - 99: The final output of the equation is virtual output 3, which is created by the operator "= Virt Op n". This parameter is therefore "= Virt Op 3".
   - 98: The gate preceding the output is an AND, which in this case requires two inputs. The operator for this gate is a 2-input AND so the parameter is “AND(2)”. Note that FlexLogic rules require that the number of inputs to most types of operators must be specified to identify the operands for the gate. As the 2-input AND operates on the two operands preceding it, these inputs must be specified, starting with the lower.
   - 97: This lower input to the AND gate must be passed through an inverter (the NOT operator) so the next parameter is “NOT”. The NOT operator acts upon the operand immediately preceding it, so specify the inverter input next.
   - 96: The input to the NOT gate is to be contact input H1c. The ON state of a contact input can be programmed to be set when the contact is either open or closed. Assume for this example that the state is to be ON for a closed contact. The operand is therefore “Cont Ip H1c On”.
   - 95: The last step in the procedure is to specify the upper input to the AND gate, the operated state of digital element 2. This operand is "DIG ELEM 2 OP".

   Writing the parameters in numerical order forms the equation for virtual output 3:

```
[95] DIG ELEM 2 OP
[96] Cont Ip H1c On
[97] NOT
[98] AND(2)
[99] = Virt Op 3
```

   It is now possible to check that this selection of parameters produces the required logic by converting the set of parameters into a logic diagram. The result of this process is shown in the figure, which is compared to the logic for virtual output 3 diagram as a check.

Figure 5-102: FlexLogic equation for virtual output 3

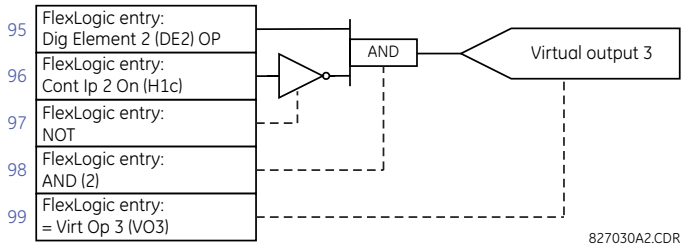

6. Repeating the process described for virtual output 3, select the FlexLogic parameters for Virtual Output 4.
   - 99: The final output of the equation is virtual output 4, which is parameter "= Virt Op 4".
   - 98: The operator preceding the output is timer 2, which is operand "TIMER 2". Note that the settings required for the timer are established in the timer programming section.
   - 97: The operator preceding timer 2 is OR #2, a 3-input OR, which is parameter "OR(3)".
   - 96: The lowest input to OR #2 is operand "Cont Ip H1c On".
   - 95: The center input to OR #2 is operand "TIMER 1".
   - 94: The input to timer 1 is operand "Virt Op 3 On".
   - 93: The upper input to OR #2 is operand "LATCH (S,R)".
   - 92: There are two inputs to a latch, and the input immediately preceding the latch reset is OR #1, a 4-input OR, which is parameter "OR(4)".
   - 91: The lowest input to OR #1 is operand "Virt Op 3 On".
   - 90: The input just above the lowest input to OR #1 is operand "XOR(2)".
   - 89: The lower input to the XOR is operand "DIG ELEM 1 PKP".
   - 88: The upper input to the XOR is operand "Virt Ip 1 On".
   - 87: The input just below the upper input to OR #1 is operand "Virt Op 2 On".
   - 86: The upper input to OR #1 is operand "Virt Op 1 On".
   - 85: The last parameter is used to set the latch, and is operand "Virt Op 4 On".

   The equation for virtual output 4 is:

```
[85] Virt Op 4 On
[86] Virt Op 1 On
[87] Virt Op 2 On
[88] Virt Ip 1 On
[89] DIG ELEM 1 PKP
[90] XOR(2)
[91] Virt Op 3 On
[92] OR(4)
[93] LATCH (S,R)
[94] Virt Op 3 On
[95] TIMER 1
[96] Cont Ip H1c On
[97] OR(3)
[98] TIMER 2
[99] = Virt Op 4
```

   Now check that the selection of parameters produce the required logic by converting the set of parameters into a logic diagram. The result is shown in the figure, which is compared to the logic for virtual output 4 diagram as a check.

Figure 5-103: FlexLogic equation for virtual output 4

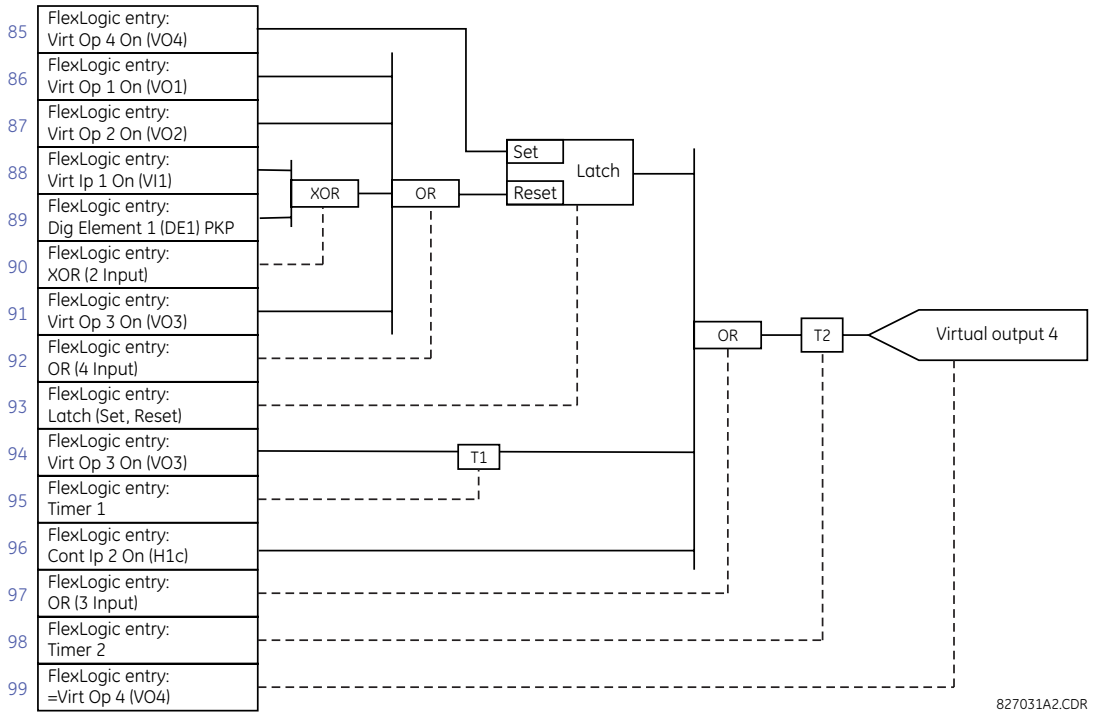

7. Now write the complete FlexLogic expression required to implement the logic, making an effort to assemble the equation in an order where Virtual Outputs that are used as inputs to operators are created before needed. In cases where a lot of processing is required to perform logic, this can be difficult to achieve, but in most cases does not cause problems as all logic is calculated at least four times per power frequency cycle. The possibility of a problem caused by sequential processing emphasizes the necessity to test the performance of FlexLogic before it is placed in service.

   In the following equation, virtual output 3 is used as an input to both latch 1 and timer 1 as arranged in the following order:

```
DIG ELEM 2 OP
Cont Ip H1c On
NOT
AND(2)
= Virt Op 3
Virt Op 4 On
Virt Op 1 On
Virt Op 2 On
Virt Ip 1 On
DIG ELEM 1 PKP
XOR(2)
Virt Op 3 On
OR(4)
LATCH (S,R)
Virt Op 3 On
TIMER 1
Cont Ip H1c On
OR(3)
TIMER 2
= Virt Op 4
END
```

   In this expression, the virtual output 4 input to the four-input OR is listed before it is created. This is typical of a form of feedback, in this case, used to create a seal-in effect with the latch, and is correct.

8. Always test the logic after it is loaded into the relay, in the same way as has been used in the past. Testing can be simplified by placing an "END" operator within the overall set of FlexLogic equations. The equations are evaluated up

to the first "END" operator.

The "On" and "Off" operands can be placed in an equation to establish a known set of conditions for test purposes, and the "INSERT" and "DELETE" commands can be used to modify equations.

5.7.5 FlexLogic equation editor

SETTINGS ⇨⇩ FLEXLOGIC ⇨ FLEXLOGIC EQUATION EDITOR

■ FLEXLOGIC ■ EQUATION EDITOR	⇔	FLEXLOGIC ENTRY 1 END	Range: FlexLogic operands
		⇩	
	⇧	FLEXLOGIC ENTRY 1024 END	Range: FlexLogic operands

There are 1,024 FlexLogic entries available, numbered from 1 to 1024, with default END entry settings. If a "Disabled" element is selected as a FlexLogic entry, the associated state flag is never set to '1'. Press the **+/–** key when editing FlexLogic equations to quickly scan through the major parameter types.

5.7.6 FlexLogic timers

SETTINGS ⇨⇩ FLEXLOGIC ⇨⇩ FLEXLOGIC TIMERS ⇨ FLEXLOGIC TIMER 1(64)

■ FLEXLOGIC ■ TIMER 1	⇔	TIMER 1 TYPE: millisecond	Range: millisecond, second, minute
	⇧⇩	TIMER 1 PICKUP DELAY: 0	Range: 0 to 60000 in steps of 1
	⇧	TIMER 1 DROPOUT DELAY: 0	Range: 0 to 60000 in steps of 1

There are 64 identical FlexLogic timers available. These timers are used as operators for FlexLogic equations.

TIMER 1 TYPE — Selects the time measurement unit.

TIMER 1 PICKUP DELAY — Sets the time delay to pickup. If a pickup delay is not required, set this function to "0."

TIMER 1 DROPOUT DELAY — Sets the time delay to dropout. If a dropout delay is not required, set this function to "0."

5.7.7 FlexElements

SETTINGS ⇨⇩ FLEXLOGIC ⇨⇩ FLEXELEMENTS ⇨ FLEXELEMENT 1(16)

■ FLEXELEMENT 1 ■	⇔	FLEXELEMENT 1 FUNCTION: Disabled	Range: Disabled, Enabled
	⇧⇩	FLEXELEMENT 1 NAME: FxE 1	Range: up to six alphanumeric characters
	⇧⇩	FLEXELEMENT 1 +IN: Off	Range: Off, any analog actual value parameter
	⇧⇩	FLEXELEMENT 1 -IN: Off	Range: Off, any analog actual value parameter
	⇧⇩	FLEXELEMENT 1 INPUT MODE: SIGNED	Range: SIGNED, ABSOLUTE
	⇧⇩	FLEXELEMENT 1 COMP MODE: LEVEL	Range: LEVEL, DELTA
	⇧⇩	FLEXELEMENT 1 DIRECTION: OVER	Range: OVER, UNDER

⇕	**FLEXELEMENT 1 PICKUP: 1.000 pu**	Range: –90.000 to 90.000 pu in steps of 0.001
⇕	**FLEXELEMENT 1 HYSTERESIS: 3.0%**	Range: 0.1 to 50.0% in steps of 0.1
⇕	**FLEXELEMENT 1 dt UNIT: Milliseconds**	Range: Milliseconds, Seconds, Minutes
⇕	**FLEXELEMENT 1 dt: 20**	Range: 20 to 86400 in steps of 1
⇕	**FLEXELEMENT 1 PKP DELAY: 0.000 s**	Range: 0.000 to 65.535 s in steps of 0.001
⇕	**FLEXELEMENT 1 RST DELAY: 0.000 s**	Range: 0.000 to 65.535 s in steps of 0.001
⇕	**FLEXELEMENT 1 BLK: Off**	Range: FlexLogic operand
⇕	**FLEXELEMENT 1 TARGET: Self-reset**	Range: Self-reset, Disabled, Latched
⇧	**FLEXELEMENT 1 EVENTS: Disabled**	Range: Disabled, Enabled

A FlexElement is a universal comparator used to monitor any analog actual value calculated by the relay or a net difference of any two analog actual values of the same type. The effective operating signal can be treated as a signed number or its absolute value can be used.

FlexElements run every half power cycle (every four protection passes).

The element can be programmed to respond either to a signal level or to a rate-of-change (delta) over a pre-defined period of time. The output operand is asserted when the operating signal is higher than a threshold or lower than a threshold, as per your choice.

Figure 5-104: FlexElement logic

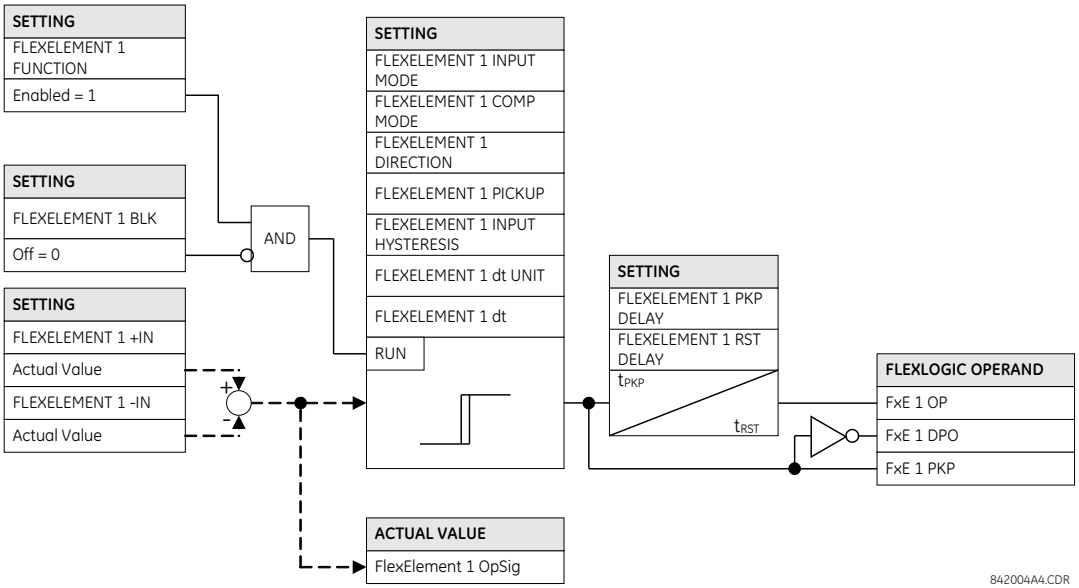

FLEXELEMENT 1 +IN — This setting specifies the first (non-inverted) input to the FlexElement. Zero is assumed as the input if this setting is set to "Off." For proper operation of the element, at least one input must be selected. Otherwise, the element does not assert its output operands.

FLEXELEMENT 1 –IN — Specifies the second (inverted) input to the FlexElement. Zero is assumed as the input if this setting is set to "Off." For proper operation of the element, at least one input must be selected. Otherwise, the element does not assert its output operands. This input is used to invert the signal if needed for convenience, or to make the element respond to a differential signal, such as for a top-bottom oil temperature differential alarm. The element does not operate if the two input signals are of different types, for example if one tries to use active power and phase angle to build the effective operating signal.

The element responds directly to the differential signal if the **FLEXELEMENT 1 INPUT MODE** setting is set to "Signed" The element responds to the absolute value of the differential signal if this setting is set to "Absolute." Sample applications for the "Absolute" setting include monitoring the angular difference between two phasors with a symmetrical limit angle in both directions, monitoring power regardless of its direction, or monitoring a trend.

The element responds directly to its operating signal—as defined by the **FLEXELEMENT 1 +IN**, **FLEXELEMENT 1 –IN** and **FLEXELEMENT 1 INPUT MODE** settings—if the **FLEXELEMENT 1 COMP MODE** setting is set to "Level." The element responds to the rate of change of its operating signal if the **FLEXELEMENT 1 COMP MODE** setting is set to "Delta." In this case, the **FLEXELEMENT 1 dt UNIT** and **FLEXELEMENT 1 dt** settings specify how the rate of change is derived.

FLEXELEMENT 1 DIRECTION — Enables the relay to respond to either high or low values of the operating signal. The following figure explains the application of the **FLEXELEMENT 1 DIRECTION**, **FLEXELEMENT 1 PICKUP**, and **FLEXELEMENT 1 HYSTERESIS** settings.

Figure 5-105: FlexElement direction, pickup, and hysteresis

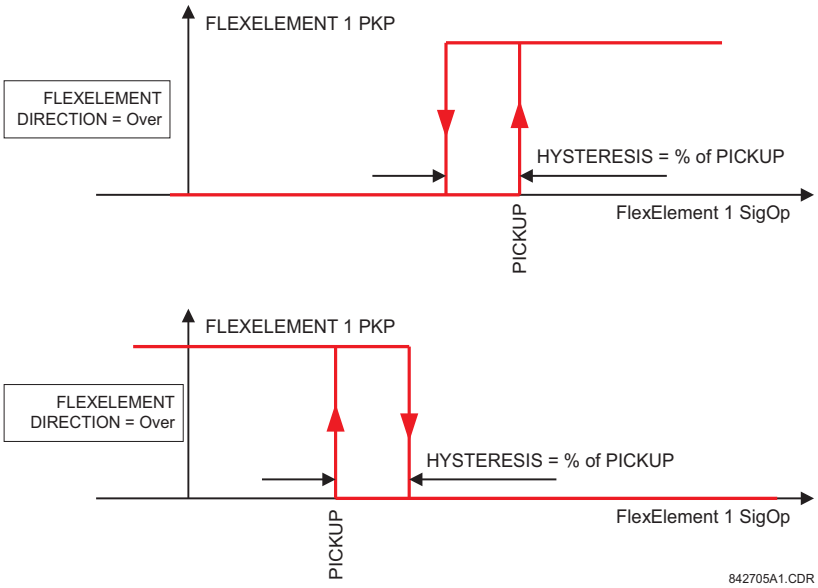

In conjunction with the **FLEXELEMENT 1 INPUT MODE** setting, the element can be programmed to provide two extra characteristics, as shown in the following figure.

Figure 5-106: FlexElement input mode setting

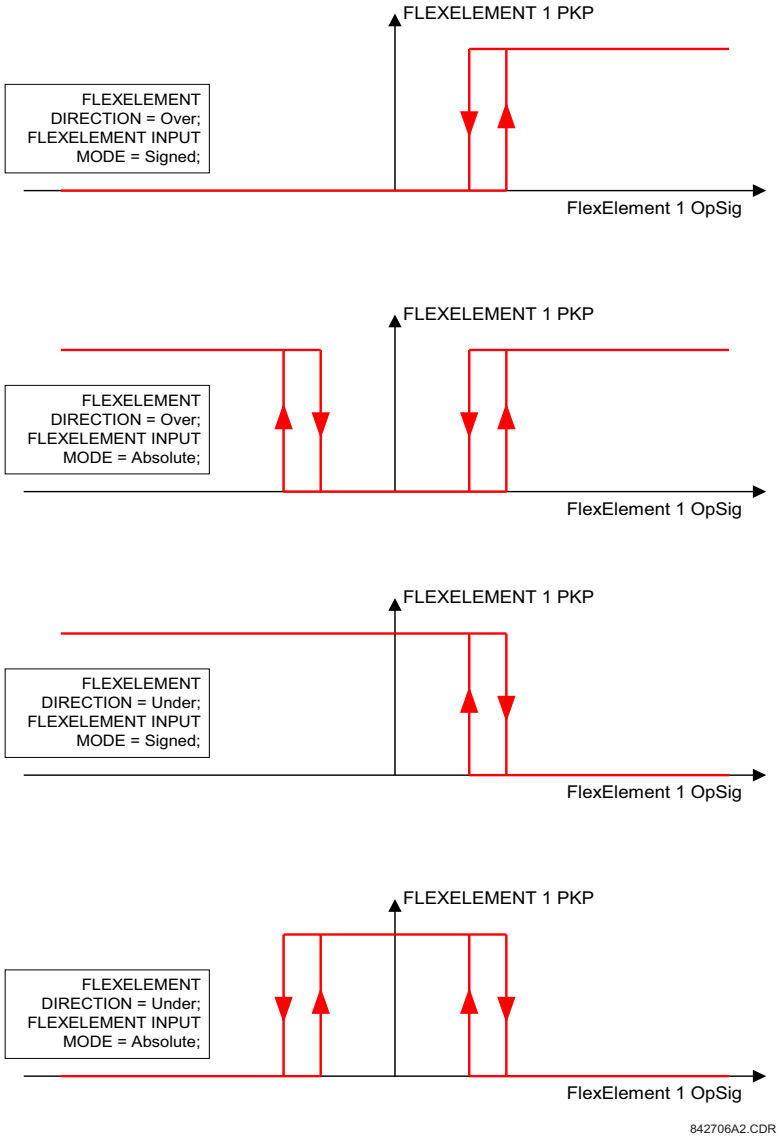

FLEXELEMENT 1 PICKUP — This setting specifies the operating threshold for the effective operating signal of the element. If set to "Over," the element picks up when the operating signal exceeds the **FLEXELEMENT 1 PICKUP** value. If set to "Under," the element picks up when the operating signal falls below the **FLEXELEMENT 1 PICKUP** value.

When using FlexElements for Voltage Elements, 1 pu is always equal to phase to ground voltage nominal secondary voltage, even if you select a phase to phase voltage as an operating quantity.

FLEXELEMENT 1 HYSTERESIS — This setting controls the element dropout. Notice that both the operating signal and the pickup threshold can be negative, facilitating applications such as reverse power alarm protection. The FlexElement can be programmed to work with all analog actual values measured by the relay. The **FLEXELEMENT 1 PICKUP** setting is entered in per-unit values using the following definitions of the base units.

Table 5-25: FlexElement base units

Unit	Description
BREAKER ACC ARCING AMPS (Brk X Acc Arc Amp A, B, and C)	BASE = 2000 $kA^2 \times$ cycle

Unit	Description
BREAKER ARCING AMPS (Brk X Arc Amp A, B, and C)	BASE = 1 $kA^2 \times$ cycle
DCmA	BASE = maximum value of the **DCMA INPUT MAX** setting for the two transducers configured under the +IN and –IN inputs
DELTA TIME	BASE = 1 µs
FREQUENCY	f_{BASE} = 1 Hz
PHASE ANGLE	φ_{BASE} = 360 degrees (see the UR angle referencing convention)
POWER FACTOR	PF_{BASE} = 1.00
RTDs	BASE = 100°C
SOURCE CURRENT	I_{BASE} = maximum nominal primary RMS value of the +IN and –IN inputs
SOURCE POWER	P_{BASE} = maximum value of $V_{BASE} \times I_{BASE}$ for the +IN and –IN inputs
SOURCE THD & HARMONICS	BASE = 1%
SOURCE VOLTAGE	V_{BASE} = maximum nominal primary RMS value of the +IN and –IN inputs

FLEXELEMENT 1 HYSTERESIS — This setting defines the pickup–dropout relation of the element by specifying the width of the hysteresis loop as a percentage of the pickup value as shown in the FlexElement Direction, Pickup, and Hysteresis diagram.

FLEXELEMENT 1 dt UNIT — Specifies the time unit for the setting **FLEXELEMENT 1 dt**. This setting is applicable only if **FLEXELEMENT 1 COMP MODE** is set to "Delta."

FLEXELEMENT 1 dt — Specifies duration of the time interval for the rate of change mode of operation. This setting is applicable only if **FLEXELEMENT 1 COMP MODE** is set to "Delta."

FLEXELEMENT 1 PKP DELAY — Specifies the pickup delay of the element.

FLEXELEMENT 1 RST DELAY — Specifies the reset delay of the element.

5

5.7.8 Non-volatile latches

SETTINGS ⇨⇩ FLEXLOGIC ⇨⇩ NON-VOLATILE LATCHES ⇨ LATCH 1(16)

■ **LATCH 1** ■	⇔	**LATCH 1 FUNCTION: Disabled**	Range: Disabled, Enabled
	⇩	**LATCH 1 ID: NV Latch 1**	Range: up to 20 alphanumeric characters
	⇩	**LATCH 1 TYPE: Reset Dominant**	Range: Reset Dominant, Set Dominant
	⇩	**LATCH 1 SET: Off**	Range: FlexLogic operand
	⇩	**LATCH 1 RESET: Off**	Range: FlexLogic operand
	⇩	**LATCH 1 TARGET: Self-reset**	Range: Self-reset, Latched, Disabled
	⇧	**LATCH 1 EVENTS: Disabled**	Range: Disabled, Enabled

The non-volatile latches provide a permanent logical flag that is stored safely and do not reset upon restart after the relay is powered down. Typical applications include sustaining operator commands or permanently blocking relay functions, such as Autorecloser, until a deliberate interface action resets the latch.

LATCH 1 TYPE — This setting characterizes Latch 1 to be Set- or Reset-dominant.

LATCH 1 SET — If asserted, the specified FlexLogic operands 'sets' Latch 1.

LATCH 1 RESET — If asserted, the specified FlexLogic operand 'resets' Latch 1.

Figure 5-107: Non-volatile latch operation table (N = 1 to 16) and logic

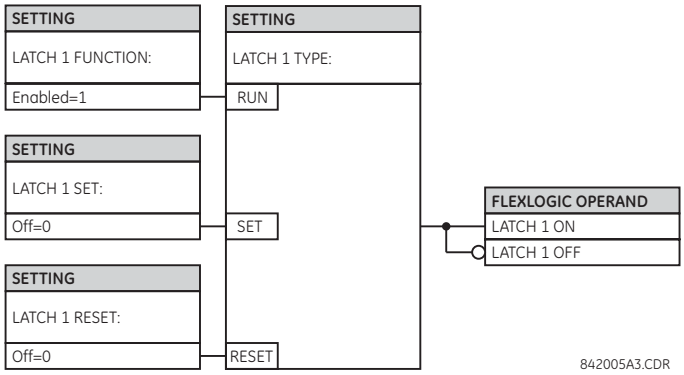

Latch n type	Latch n set	Latch n reset	Latch n on	Latch n off
Reset Dominant	ON	OFF	ON	OFF
	OFF	OFF	Previous State	Previous State
	ON	ON	OFF	ON
	OFF	ON	OFF	ON
Set Dominant	ON	OFF	ON	OFF
	ON	ON	ON	OFF
	OFF	OFF	Previous State	Previous State
	OFF	ON	OFF	ON

5

5.8 Grouped elements

5.8.1 Overview

Each protection element can be assigned up to six sets of settings with designations 1 to 6. The performance of these elements is defined by the active setting group at a given time. Multiple setting groups allow the user to conveniently change protection settings for different operating situations (for example, altered power system configuration or season of the year). The active setting group can be preset or selected in the **SETTING GROUPS** menu (see the Control Elements section later in this chapter). See also the Introduction to Elements section at the beginning of this chapter.

5.8.2 Setting group 1

SETTINGS ⇨⇩ GROUPED ELEMENTS ⇨ SETTING GROUP 1(6)

■ **SETTING GROUP 1** ■	⇔	■ **PHASE CURRENT** ■	See below
	⇩	■ **NEUTRAL CURRENT** ■	See page 5-236
	⇩	■ **GROUND CURRENT** ■	See page 5-248
	⇩	■ **NEGATIVE SEQUENCE CURRENT**	See page 5-251

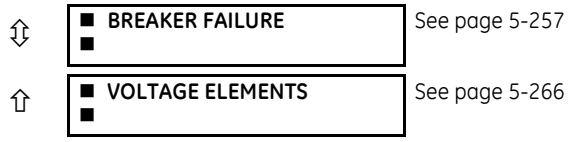

Each of the six setting group menus is identical. Setting group 1 (the default active group) is active automatically when no other group is active.

If the device incorrectly switches to group 1 after power cycling, upgrade the firmware to version 7.31 or later to correct this issue.

5.8.3 Phase current

5.8.3.1 Menu

SETTINGS ⇨⇩ GROUPED ELEMENTS ⇨ SETTING GROUP 1(6) ⇨⇩ PHASE CURRENT

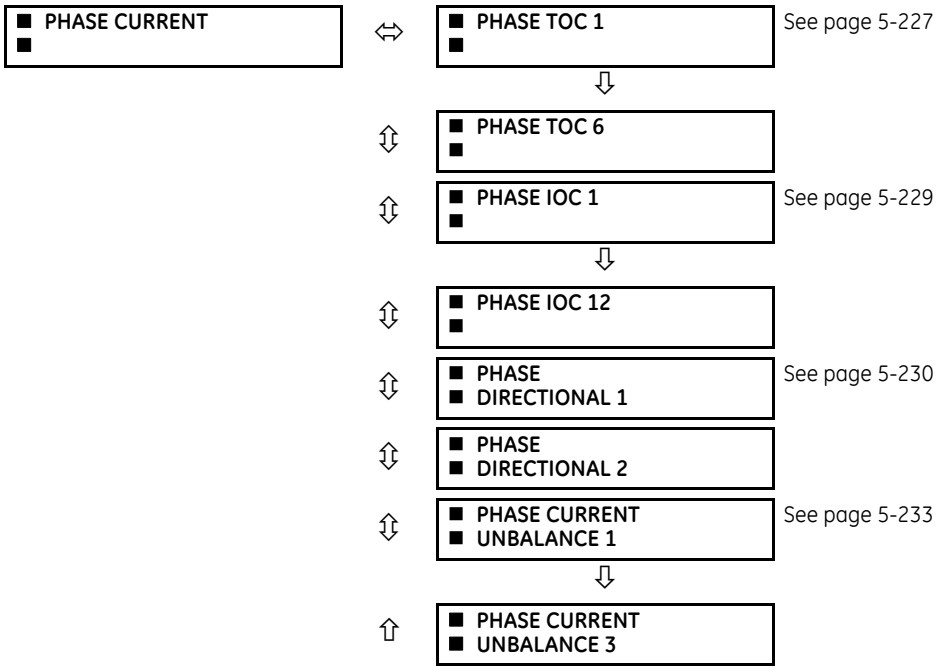

5.8.3.2 Inverse TOC curve characteristics

The inverse time overcurrent curves used by the time overcurrent elements are the IEEE, IEC, GE Type IAC, and I^2t standard curve shapes. This allows for simplified coordination with downstream devices.

If none of these curve shapes is adequate, FlexCurves can be used to customize the inverse time curve characteristics. The definite time curve is also an option that can be appropriate if only simple protection is required.

Table 5-26: Overcurrent curve types

IEEE	IEC	GE type IAC	Other
IEEE Extremely Inverse	IEC Curve A (BS142)	IAC Extremely Inverse	I^2t
IEEE Very Inverse	IEC Curve B (BS142)	IAC Very Inverse	FlexCurves A, B, C, and D
IEEE Moderately Inverse	IEC Curve C (BS142)	IAC Inverse	Recloser Curves
	IEC Short Inverse	IAC Short Inverse	Definite Time

A time dial multiplier setting allows selection of a multiple of the base curve shape (where the time dial multiplier = 1) with the curve shape (**CURVE**) setting. Unlike the electromechanical time dial equivalent, operate times are directly proportional to the time multiplier (**TD MULTIPLIER**) setting value. For example, all times for a multiplier of 10 are 10 times the multiplier 1 or base curve values. Setting the multiplier to zero results in an instantaneous response to all current levels above pickup.

Time overcurrent time calculations are made with an internal *energy capacity* memory variable. When this variable indicates that the energy capacity has reached 100%, a time overcurrent element operates. If less than 100% energy capacity is accumulated in this variable and the current falls below the dropout threshold of 97 to 98% of the pickup value, the variable must be reduced. Two methods of this resetting operation are available: "Instantaneous" and "Timed." The "Instantaneous" selection is intended for applications with other relays, such as most static relays, which set the energy capacity directly to zero when the current falls below the reset threshold. The "Timed" selection can be used where the relay must coordinate with electromechanical relays.

The URs calculate operate time corresponding to the values in the range of 1.03 to 20 multiples of the pickup current. Above 20 multiples of the pickup current, URs clamp the operate time to the value at a multiple of 20, resulting in the flat part of the characteristics. Reset time is calculated in the range of 0 to 0.97 multiples of the pickup current.

IEEE curves

The IEEE time overcurrent curve shapes conform to industry standards and the IEEE C37.112-1996 curve classifications for extremely, very, and moderately inverse curves. The IEEE curves are derived from the operate and reset time equations.

$$T = TDM \times \left[\frac{A}{\left(\frac{I}{I_{pickup}}\right)^{p} - 1} + B \right], \quad T_{RESET} = TDM \times \left[\frac{t_r}{1 - \left(\frac{I}{I_{pickup}}\right)^{2}} \right] \qquad \textbf{Eq. 5-7}$$

5

where

T = operate time (in seconds)
TDM = Multiplier setting
I = input current
I_{pickup} = Pickup Current setting
A, B, p = constants defined in the table
T_{RESET} = reset time in seconds (assuming energy capacity is 100% and RESET is "Timed")
t_r = characteristic constant defined in the table

Table 5-27: IEEE inverse time curve constants

IEEE curve shape	A	B	p	t_r
IEEE Extremely Inverse	28.2	0.1217	2.0000	29.1
IEEE Very Inverse	19.61	0.491	2.0000	21.6
IEEE Moderately Inverse	0.0515	0.1140	0.02000	4.85

Table 5-28: IEEE curve trip times (in seconds)

Multiplier (TDM)	Current (I / I_{pickup})									
	1.5	2.0	3.0	4.0	5.0	6.0	7.0	8.0	9.0	10.0
IEEE Extremely Inverse										
0.5	11.341	4.761	1.823	1.001	0.648	0.464	0.355	0.285	0.237	0.203
1.0	22.682	9.522	3.647	2.002	1.297	0.927	0.709	0.569	0.474	0.407
2.0	45.363	19.043	7.293	4.003	2.593	1.855	1.418	1.139	0.948	0.813
4.0	90.727	38.087	14.587	8.007	5.187	3.710	2.837	2.277	1.897	1.626
6.0	136.090	57.130	21.880	12.010	7.780	5.564	4.255	3.416	2.845	2.439
8.0	181.454	76.174	29.174	16.014	10.374	7.419	5.674	4.555	3.794	3.252
10.0	226.817	95.217	36.467	20.017	12.967	9.274	7.092	5.693	4.742	4.065
IEEE Very Inverse										

Multiplier (TDM)	Current (I / I_{pickup})									
	1.5	**2.0**	**3.0**	**4.0**	**5.0**	**6.0**	**7.0**	**8.0**	**9.0**	**10.0**
0.5	8.090	3.514	1.471	0.899	0.654	0.526	0.450	0.401	0.368	0.345
1.0	16.179	7.028	2.942	1.798	1.308	1.051	0.900	0.802	0.736	0.689
2.0	32.358	14.055	5.885	3.597	2.616	2.103	1.799	1.605	1.472	1.378
4.0	64.716	28.111	11.769	7.193	5.232	4.205	3.598	3.209	2.945	2.756
6.0	97.074	42.166	17.654	10.790	7.849	6.308	5.397	4.814	4.417	4.134
8.0	129.432	56.221	23.538	14.387	10.465	8.410	7.196	6.418	5.889	5.513
10.0	161.790	70.277	29.423	17.983	13.081	10.513	8.995	8.023	7.361	6.891
IEEE Moderately Inverse										
0.5	3.220	1.902	1.216	0.973	0.844	0.763	0.706	0.663	0.630	0.603
1.0	6.439	3.803	2.432	1.946	1.688	1.526	1.412	1.327	1.260	1.207
2.0	12.878	7.606	4.864	3.892	3.377	3.051	2.823	2.653	2.521	2.414
4.0	25.756	15.213	9.729	7.783	6.753	6.102	5.647	5.307	5.041	4.827
6.0	38.634	22.819	14.593	11.675	10.130	9.153	8.470	7.960	7.562	7.241
8.0	51.512	30.426	19.458	15.567	13.507	12.204	11.294	10.614	10.083	9.654
10.0	64.390	38.032	24.322	19.458	16.883	15.255	14.117	13.267	12.604	12.068

IEC curves

For European applications, the relay offers three standard curves defined in IEC 255-4 and British standard BS142. These are defined as IEC Curve A, IEC Curve B, and IEC Curve C. The IEC curves are derived by the operate and reset time equations.

$$T = TDM \times \left[\frac{K}{(I/I_{pickup})^E - 1}\right], \quad T_{RESET} = TDM \times \left[\frac{t_r}{1-(I/I_{pickup})^2}\right] \qquad \textbf{Eq. 5-8}$$

where

T = operate time (in seconds)
TDM = Multiplier setting
I = input current
I_{pickup} = Pickup Current setting
K, E = constants defined in the table
t_r = characteristic constant defined in the table
T_{RESET} = reset time in seconds (assuming energy capacity is 100% and **RESET** is "Timed")

Table 5-29: IEC (BS) inverse time curve constants

IEC (BS) curve shape	K	E	t_r
IEC Curve A (BS142)	0.140	0.020	9.7
IEC Curve B (BS142)	13.500	1.000	43.2
IEC Curve C (BS142)	80.000	2.000	58.2
IEC Short Inverse	0.050	0.040	0.500

Table 5-30: IEC curve trip times (in seconds)

Multiplier (TDM)	Current (I / I_{pickup})									
	1.5	**2.0**	**3.0**	**4.0**	**5.0**	**6.0**	**7.0**	**8.0**	**9.0**	**10.0**
IEC Curve A										
0.05	0.860	0.501	0.315	0.249	0.214	0.192	0.176	0.165	0.156	0.149
0.10	1.719	1.003	0.630	0.498	0.428	0.384	0.353	0.330	0.312	0.297
0.20	3.439	2.006	1.260	0.996	0.856	0.767	0.706	0.659	0.623	0.594

Multiplier (TDM)	Current (I / I_{pickup})									
	1.5	**2.0**	**3.0**	**4.0**	**5.0**	**6.0**	**7.0**	**8.0**	**9.0**	**10.0**
0.40	6.878	4.012	2.521	1.992	1.712	1.535	1.411	1.319	1.247	1.188
0.60	10.317	6.017	3.781	2.988	2.568	2.302	2.117	1.978	1.870	1.782
0.80	13.755	8.023	5.042	3.984	3.424	3.070	2.822	2.637	2.493	2.376
1.00	17.194	10.029	6.302	4.980	4.280	3.837	3.528	3.297	3.116	2.971
IEC Curve B										
0.05	1.350	0.675	0.338	0.225	0.169	0.135	0.113	0.096	0.084	0.075
0.10	2.700	1.350	0.675	0.450	0.338	0.270	0.225	0.193	0.169	0.150
0.20	5.400	2.700	1.350	0.900	0.675	0.540	0.450	0.386	0.338	0.300
0.40	10.800	5.400	2.700	1.800	1.350	1.080	0.900	0.771	0.675	0.600
0.60	16.200	8.100	4.050	2.700	2.025	1.620	1.350	1.157	1.013	0.900
0.80	21.600	10.800	5.400	3.600	2.700	2.160	1.800	1.543	1.350	1.200
1.00	27.000	13.500	6.750	4.500	3.375	2.700	2.250	1.929	1.688	1.500
IEC Curve C										
0.05	3.200	1.333	0.500	0.267	0.167	0.114	0.083	0.063	0.050	0.040
0.10	6.400	2.667	1.000	0.533	0.333	0.229	0.167	0.127	0.100	0.081
0.20	12.800	5.333	2.000	1.067	0.667	0.457	0.333	0.254	0.200	0.162
0.40	25.600	10.667	4.000	2.133	1.333	0.914	0.667	0.508	0.400	0.323
0.60	38.400	16.000	6.000	3.200	2.000	1.371	1.000	0.762	0.600	0.485
0.80	51.200	21.333	8.000	4.267	2.667	1.829	1.333	1.016	0.800	0.646
1.00	64.000	26.667	10.000	5.333	3.333	2.286	1.667	1.270	1.000	0.808
IEC Short Inverse										
0.05	0.153	0.089	0.056	0.044	0.038	0.034	0.031	0.029	0.027	0.026
0.10	0.306	0.178	0.111	0.088	0.075	0.067	0.062	0.058	0.054	0.052
0.20	0.612	0.356	0.223	0.175	0.150	0.135	0.124	0.115	0.109	0.104
0.40	1.223	0.711	0.445	0.351	0.301	0.269	0.247	0.231	0.218	0.207
0.60	1.835	1.067	0.668	0.526	0.451	0.404	0.371	0.346	0.327	0.311
0.80	2.446	1.423	0.890	0.702	0.602	0.538	0.494	0.461	0.435	0.415
1.00	3.058	1.778	1.113	0.877	0.752	0.673	0.618	0.576	0.544	0.518

IAC curves

The curves for the General Electric type IAC relay family are derived from the formulae:

$$T = TDM \times \left(A + \frac{B}{(I/I_{pkp}) - C} + \frac{D}{((I/I_{pkp}) - C)^2} + \frac{E}{((I/I_{pkp}) - C)^3} \right) \quad , \quad T_{RESET} = TDM \times \left[\frac{t_r}{1 - (I/I_{pkp})^2} \right] \qquad \textbf{Eq. 5-9}$$

where

T = operate time (in seconds)
TDM = Multiplier setting
I = Input current
I_{pkp} = Pickup Current setting
A to E = constants defined in the table
t_r = characteristic constant defined in the table
T_{RESET} = reset time in seconds (assuming energy capacity is 100% and RESET is “Timed”)

Table 5-31: GE type IAC inverse time curve constants

IAC curve shape	A	B	C	D	E	t_r
IAC Extreme Inverse	0.0040	0.6379	0.6200	1.7872	0.2461	6.008
IAC Very Inverse	0.0900	0.7955	0.1000	–1.2885	7.9586	4.678
IAC Inverse	0.2078	0.8630	0.8000	–0.4180	0.1947	0.990
IAC Short Inverse	0.0428	0.0609	0.6200	–0.0010	0.0221	0.222

Table 5-32: GE type IAC curve trip times

Multiplier (TDM)	Current (I / I_{pickup})									
	1.5	2.0	3.0	4.0	5.0	6.0	7.0	8.0	9.0	10.0
IAC Extremely Inverse										
0.5	1.699	0.749	0.303	0.178	0.123	0.093	0.074	0.062	0.053	0.046
1.0	3.398	1.498	0.606	0.356	0.246	0.186	0.149	0.124	0.106	0.093
2.0	6.796	2.997	1.212	0.711	0.491	0.372	0.298	0.248	0.212	0.185
4.0	13.591	5.993	2.423	1.422	0.983	0.744	0.595	0.495	0.424	0.370
6.0	20.387	8.990	3.635	2.133	1.474	1.115	0.893	0.743	0.636	0.556
8.0	27.183	11.987	4.846	2.844	1.966	1.487	1.191	0.991	0.848	0.741
10.0	33.979	14.983	6.058	3.555	2.457	1.859	1.488	1.239	1.060	0.926
IAC Very Inverse										
0.5	1.451	0.656	0.269	0.172	0.133	0.113	0.101	0.093	0.087	0.083
1.0	2.901	1.312	0.537	0.343	0.266	0.227	0.202	0.186	0.174	0.165
2.0	5.802	2.624	1.075	0.687	0.533	0.453	0.405	0.372	0.349	0.331
4.0	11.605	5.248	2.150	1.374	1.065	0.906	0.810	0.745	0.698	0.662
6.0	17.407	7.872	3.225	2.061	1.598	1.359	1.215	1.117	1.046	0.992
8.0	23.209	10.497	4.299	2.747	2.131	1.813	1.620	1.490	1.395	1.323
10.0	29.012	13.121	5.374	3.434	2.663	2.266	2.025	1.862	1.744	1.654
IAC Inverse										
0.5	0.578	0.375	0.266	0.221	0.196	0.180	0.168	0.160	0.154	0.148
1.0	1.155	0.749	0.532	0.443	0.392	0.360	0.337	0.320	0.307	0.297
2.0	2.310	1.499	1.064	0.885	0.784	0.719	0.674	0.640	0.614	0.594
4.0	4.621	2.997	2.128	1.770	1.569	1.439	1.348	1.280	1.229	1.188
6.0	6.931	4.496	3.192	2.656	2.353	2.158	2.022	1.921	1.843	1.781
8.0	9.242	5.995	4.256	3.541	3.138	2.878	2.695	2.561	2.457	2.375
10.0	11.552	7.494	5.320	4.426	3.922	3.597	3.369	3.201	3.072	2.969
IAC Short Inverse										
0.5	0.072	0.047	0.035	0.031	0.028	0.027	0.026	0.026	0.025	0.025
1.0	0.143	0.095	0.070	0.061	0.057	0.054	0.052	0.051	0.050	0.049
2.0	0.286	0.190	0.140	0.123	0.114	0.108	0.105	0.102	0.100	0.099
4.0	0.573	0.379	0.279	0.245	0.228	0.217	0.210	0.204	0.200	0.197
6.0	0.859	0.569	0.419	0.368	0.341	0.325	0.314	0.307	0.301	0.296
8.0	1.145	0.759	0.559	0.490	0.455	0.434	0.419	0.409	0.401	0.394
10.0	1.431	0.948	0.699	0.613	0.569	0.542	0.524	0.511	0.501	0.493

I^2t curves

The I^2t curves are derived as follows:

$$T = TDM \times \left[\frac{100}{\left(\frac{I}{I_{pickup}} \right)^2} \right], \quad T_{RESET} = TDM \times \left[\frac{100}{\left(\frac{I}{I_{pickup}} \right)^{-2}} \right] \qquad \textbf{Eq. 5-10}$$

where

T = Operate time (in seconds)
TDM = Multiplier setting
I = Input current
I_{pickup} = Pickup Current setting
T_{RESET} = reset time in seconds (assuming energy capacity is 100% and RESET is "Timed")

Table 5-33: I^2t curve trip times

Multiplier (TDM)	Current (I / I_{pickup})									
	1.5	**2.0**	**3.0**	**4.0**	**5.0**	**6.0**	**7.0**	**8.0**	**9.0**	**10.0**
0.01	0.44	0.25	0.11	0.06	0.04	0.03	0.02	0.02	0.01	0.01
0.10	4.44	2.50	1.11	0.63	0.40	0.28	0.20	0.16	0.12	0.10
1.00	44.44	25.00	11.11	6.25	4.00	2.78	2.04	1.56	1.23	1.00
10.00	444.44	250.00	111.11	62.50	40.00	27.78	20.41	15.63	12.35	10.00
100.00	4444.4	2500.0	1111.1	625.00	400.00	277.78	204.08	156.25	123.46	100.00
600.00	26666.7	15000.0	6666.7	3750.0	2400.0	1666.7	1224.5	937.50	740.74	600.00

5

FlexCurves

FlexCurves are described in the FlexCurves section later in this chapter. The curve shapes for the FlexCurves are derived from the formulae:

$$T = TDM \times \left[\text{FlexCurve Time at} \left(\frac{I}{I_{pickup}} \right) \right] \text{ when } \left(\frac{I}{I_{pickup}} \right) \geq 1.00 \qquad \textbf{Eq. 5-11}$$

$$T_{RESET} = TDM \times \left[\text{FlexCurve Time at} \left(\frac{I}{I_{pickup}} \right) \right] \text{ when } \left(\frac{I}{I_{pickup}} \right) \leq 0.98 \qquad \textbf{Eq. 5-12}$$

where

T = operate time (in seconds)
TDM = Multiplier setting
I = Input Current
I_{pickup} = Pickup Current setting
T_{RESET} = Reset Time in seconds (assuming energy capacity is 100% and **RESET**: Timed)

Definite time curve

The Definite Time curve shape operates as soon as the pickup level is exceeded for a specified period of time. The base definite time curve delay is in seconds. The curve multiplier of 0.00 to 600.00 makes this delay adjustable from instantaneous to 600.00 seconds in steps of 10 ms. The definite time curve shapes are defined as follows:

$$T = TDM \text{ in seconds, when } I > I_{pickup} \qquad \textbf{Eq. 5-13}$$

$$T_{RESET} = TDM \text{ in seconds} \qquad \textbf{Eq. 5-14}$$

where

T = Operate Time (in seconds)
TDM = Multiplier setting
I = Input Current
I_{pickup} = Pickup Current setting
T_{RESET} = Reset Time in seconds (assuming energy capacity is 100% and RESET: Timed)

Recloser curves

The C70 uses the FlexCurve feature to facilitate programming of 41 recloser curves. See the FlexCurves settings section earlier in this chapter for details.

5.8.3.3 Phase time overcurrent (ANSI 51P, IEC PTOC)

SETTINGS ⇨⇩ GROUPED ELEMENTS ⇨⇩ SETTING GROUP 1(6) ⇨ PHASE CURRENT ⇨ PHASE TOC1(6)

■ PHASE TOC 1 ■	⇔	PHASE TOC1 FUNCTION: Disabled	Range: Disabled, Enabled
	⇩	PHASE TOC1 SIGNAL SOURCE: SRC 1	Range: SRC 1, SRC 2, SRC 3, SRC 4, SRC 5, SRC 6
	⇩	PHASE TOC1 INPUT: Phasor	Range: Phasor, RMS
	⇩	PHASE TOC1 PICKUP: 1.000 pu	Range: 0.020 to 30.000 pu in steps of 0.001
	⇩	PHASE TOC1 CURVE: IEEE Mod Inv	Range: see Overcurrent Curve Types table
	⇩	PHASE TOC1 TD MULTIPLIER: 1.00	Range: 0.00 to 600.00 in steps of 0.01
	⇩	PHASE TOC1 RESET: Instantaneous	Range: Instantaneous, Timed
	⇩	PHASE TOC1 VOLTAGE RESTRAINT: Disabled	Range: Disabled, Enabled
	⇩	PHASE TOC1 BLOCK A: Off	Range: FlexLogic operand
	⇩	PHASE TOC1 BLOCK B: Off	Range: FlexLogic operand
	⇩	PHASE TOC1 BLOCK C: Off	Range: FlexLogic operand
	⇩	PHASE TOC1 TARGET: Self-reset	Range: Self-reset, Latched, Disabled
	⇧	PHASE TOC1 EVENTS: Disabled	Range: Disabled, Enabled

The phase time overcurrent element can provide a specified time-delay operating characteristic versus the applied current or be used as a simple definite time element. The phase current input quantities can be programmed as fundamental phasor magnitude or total waveform RMS magnitude as required by the application.

Two methods of resetting operation are available: “Timed” and “Instantaneous” (see the Inverse TOC Curve Characteristics section earlier for details on curve setup, trip times, and reset operation). When the element is blocked, the time accumulator resets according to the reset characteristic. For example, if the element reset characteristic is set to “Instantaneous” and the element is blocked, the time accumulator clears immediately.

The **PHASE TOC1 PICKUP** setting can be reduced dynamically by a voltage restraint feature (when enabled). This is accomplished via the multipliers (Mvr) corresponding to the phase-phase voltages of the voltage restraint characteristic curve (see the figure); the pickup level is calculated as Mvr times the **PHASE TOC1 PICKUP** setting. If the voltage restraint feature is disabled, the pickup level always remains at the setting value.

The Phase TOC element can be used as a basic thermal overload protection element, using I^2t curves. The thermal time characteristic with I^2t is based on the current squared, integrated over time during fault. The PHASE TOC 1 I2t RST operand is asserted indicating that protected apparatus is cooled down and can be safely put back into service.

Time to assert this operand after PHASE TOC 1 operated with I^2t curves is estimated using following formula.

$$t = \tau \times \ln\left(\left(\frac{I_{PKP}}{I_F}\right)^2\right) \qquad \textbf{Eq. 5-15}$$

where

τ is a time constant fixed to a 10 minute value

I_{PKP} is a pickup setting of TOC

I_F is a maximum phase fault current

Figure 5-108: Phase time overcurrent voltage restraint characteristic

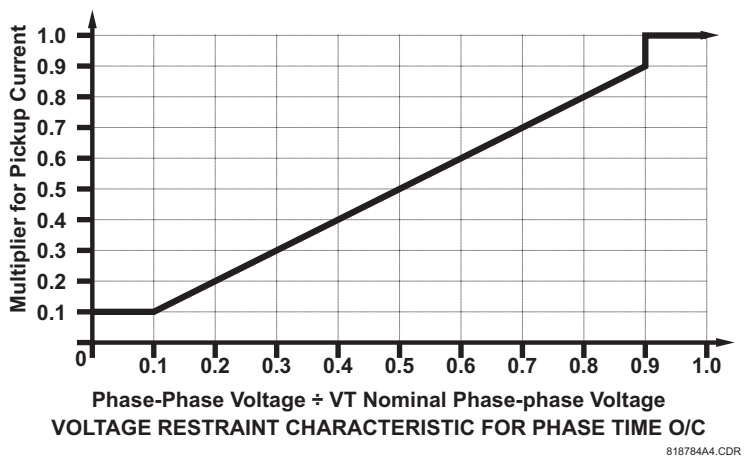

FUNCTION — This setting enables and disables the phase time overcurrent protection element.

SIGNAL SOURCE — Selects the signal source for the phase time overcurrent protection element.

INPUT — Selects how phase current input quantities are interpreted by the C70. Inputs can be selected as fundamental phasor magnitudes or total waveform RMS magnitudes as required by the application.

PICKUP — Specifies the phase time overcurrent pickup level in per-unit values.

CURVE — Selects the time inverse overcurrent curve style.

TD MULTIPLIER — Specifies a multiple of the base curve shape specified by the **CURVE** setting. Programming this value to zero results in an instantaneous response to all current levels above pickup.

RESET — The "Instantaneous" reset method is intended for applications with other relays, such as most static relays, which set the energy capacity directly to zero when the current falls below the reset threshold. The "Timed" reset method can be used where the relay must coordinate with electromechanical relays.

VOLTAGE RESTRAINT — Enables and disables the phase time overcurrent voltage restraint feature.

BLOCK A — Assertion of the operand assigned to this setting blocks phase A of the phase time overcurrent element.

EVENTS — Enables and disables the logging of phase time overcurrent events in the sequence of events recorder.

Figure 5-109: Phase time overcurrent 1 logic

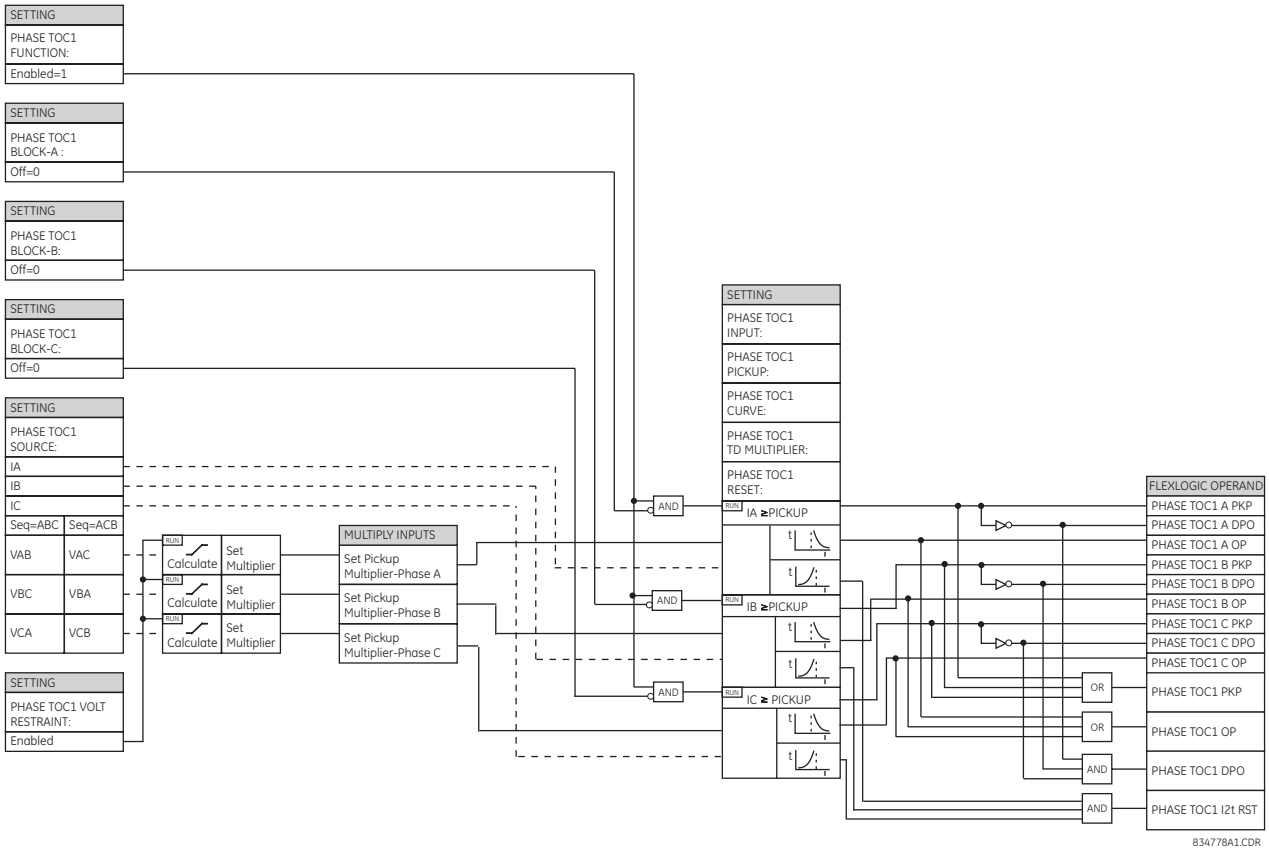

5.8.3.4 Phase instantaneous overcurrent (ANSI 50P, IEC PIOC)

SETTINGS ⇨⇩ GROUPED ELEMENTS ⇨ SETTING GROUP 1(6) ⇨ PHASE CURRENT ⇨ PHASE IOC 1(12)

■ **PHASE IOC 1** ■	⇔	**PHASE IOC1 FUNCTION: Disabled**	Range: Disabled, Enabled
	⇕	**PHASE IOC1 SIGNAL SOURCE: SRC 1**	Range: SRC 1, SRC 2, SRC 3, SRC 4, SRC 5, SRC 6
	⇕	**PHASE IOC1 PICKUP: 1.000 pu**	Range: 0.005 to 30.000 pu in steps of 0.001
	⇕	**PHASE IOC1 PICKUP DELAY: 0.00 s**	Range: 0.00 to 600.00 s in steps of 0.01
	⇕	**PHASE IOC1 RESET DELAY: 0.00 s**	Range: 0.00 to 600.00 s in steps of 0.01
	⇕	**PHASE IOC1 BLOCK A: Off**	Range: FlexLogic operand
		⇩	
	⇕	**PHASE IOC1 BLOCK C: Off**	Range: FlexLogic operand
	⇕	**PHASE IOC1 TARGET: Self-reset**	Range: Self-reset, Latched, Disabled
	⇧	**PHASE IOC1 EVENTS: Disabled**	Range: Disabled, Enabled

The phase instantaneous overcurrent element can be used as an instantaneous element with no intentional delay or as a definite time element. The input current is the fundamental phasor magnitude.

FUNCTION — This setting enables and disables the phase instantaneous overcurrent protection element.

SOURCE — Selects the signal source for the phase instantaneous overcurrent protection element.

PICKUP — Specifies the phase instantaneous overcurrent pickup level in per-unit values.

DELAY —Delays the assertion of the PHASE IOC OP operands. It is used to achieve timing coordination with other elements and relays.

RESET DELAY — Specifies a delay for the reset of the phase instantaneous overcurrent element between the operate output state and the return to logic 0 after the input passes outside the defined pickup range. This setting is used to ensure that the relay output contacts are closed long enough to ensure reception by downstream equipment.

BLOCK A — Assertion of the operand assigned to this setting block's phase A of the phase instantaneous overcurrent element.

EVENTS — Enables and disables the logging of phase instantaneous overcurrent events in the sequence of events recorder.

Figure 5-110: Phase instantaneous overcurrent 1 logic

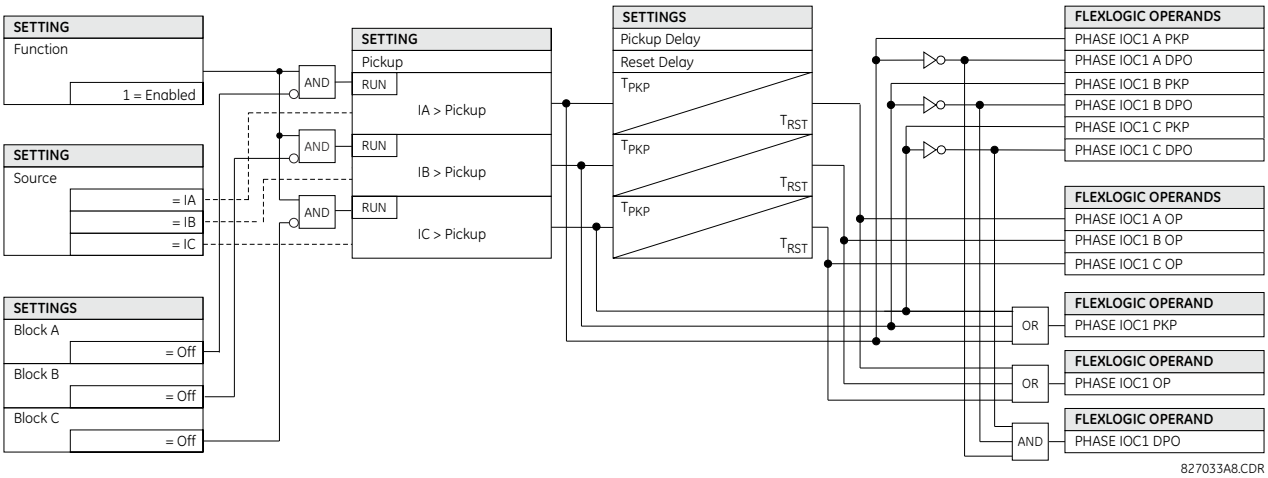

5.8.3.5 Phase directional overcurrent (ANSI 67P, IEC PDOC/PTOC)

SETTINGS ⇨⇩ GROUPED ELEMENTS ⇨ SETTING GROUP 1(6) ⇨ PHASE CURRENT ⇨ PHASE DIRECTIONAL 1(2)

■ PHASE ■ DIRECTIONAL 1	⇔	**PHASE DIR 1 FUNCTION: Disabled**	Range: Disabled, Enabled
	⇩	**PHASE DIR 1 SIGNAL SOURCE: SRC 1**	Range: SRC 1, SRC 2, SRC 3, SRC 4, SRC 5, SRC 6
	⇩	**PHASE DIR 1 BLOCK: Off**	Range: FlexLogic operand
	⇩	**PHASE DIR 1 ECA: 30°**	Range: 0 to 359° in steps of 1
	⇩	**PHASE DIR POL V1 THRESHOLD: 0.700 pu**	Range: 0.004 to 3.000 pu in steps of 0.001
	⇩	**PHASE DIR 1 BLOCK WHEN V MEM EXP: No**	Range: No, Yes
	⇩	**PHASE DIR 1 TARGET: Self-reset**	Range: Self-reset, Latched, Disabled
	⇧	**PHASE DIR 1 EVENTS: Disabled**	Range: Disabled, Enabled

NOTE

The TARGET setting is not user-selectable and forced to "Disabled". If Targets are required from directional elements, it can be achieved by assigning directional element output to a digital element, where targets selection can be used as required.

The phase directional elements (one for each of phases A, B, and C) determine the phase current flow direction for steady state and fault conditions and can be used to control the operation of the phase overcurrent elements via the **BLOCK** inputs of these elements.

Figure 5-111: Phase A directional polarization

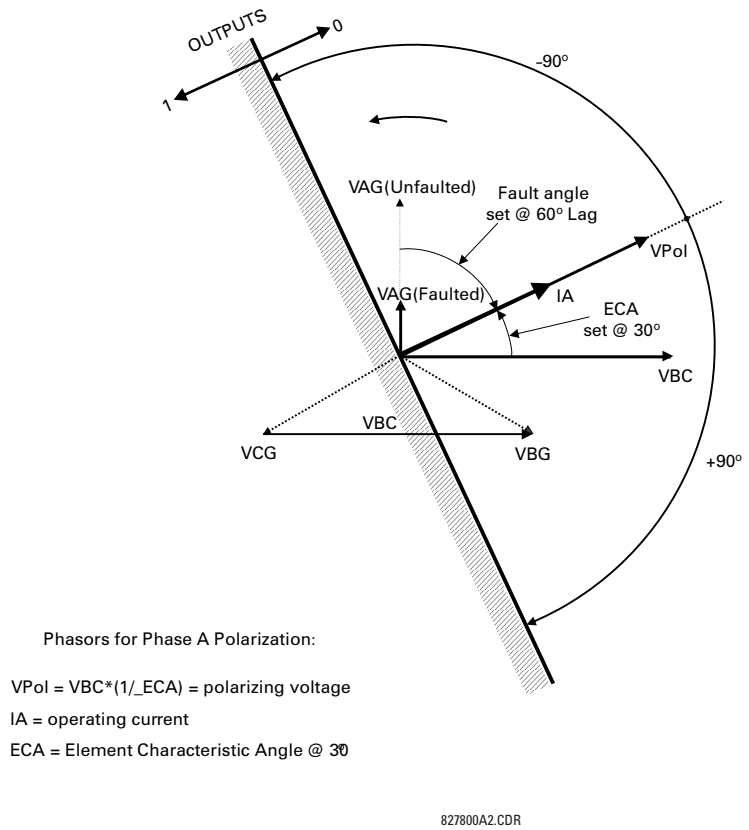

This element is intended to apply a block signal to an overcurrent element to prevent an operation when current is flowing in a particular direction. The direction of current flow is determined by measuring the phase angle between the current from the phase CTs and the line-line voltage from the VTs, based on the 90° or quadrature connection. If there is a requirement to supervise overcurrent elements for flows in opposite directions, such as can happen through a bus-tie breaker, program two phase directional elements with opposite element characteristic angle (ECA) settings.

To increase security for three phase faults very close to the VTs used to measure the polarizing voltage, a voltage memory feature is incorporated. This feature stores the polarizing voltage the moment before the voltage collapses, and uses it to determine direction. The voltage memory remains valid for one second after the voltage has collapsed.

The main component of the phase directional element is the phase angle comparator with two inputs: the operating signal (phase current) and the polarizing signal (the line voltage, shifted in the leading direction by the characteristic angle, ECA).

The table shows the operating and polarizing signals used for phase directional control.

Table 5-34: Operating and polarizing signals

Phase	Operating signal	Polarizing signal V_{pol}	
		ABC phase sequence	ACB phase sequence
A	angle of IA	angle of VBC × (1∠ECA)	angle of VCB × (1∠ECA)

Phase	Operating signal	Polarizing signal V_{pol}	
		ABC phase sequence	ACB phase sequence
B	angle of IB	angle of VCA × (1∠ECA)	angle of VAC × (1∠ECA)
C	angle of IC	angle of VAB × (1∠ECA)	angle of VBA × (1∠ECA)

Mode of operation

- When the function is "Disabled" or the operating current is below 5% × CT nominal, the element output is logic "0"
- When the function is "Enabled," the operating current is above 5% × CT nominal, and the polarizing voltage is above the **PRODUCT SETUP ⇨⇩ DISPLAY PROPERTIES ⇨⇩ VOLTAGE CUT-OFF LEVEL** value, the element output is dependent on the phase angle between the operating and polarizing signals:
  - The element output is logic "0" when the operating current is within polarizing voltage ±90°
  - For all other angles, the element output is logic "1"
- Once the voltage memory has expired, the phase overcurrent elements under directional control can be set to block or trip on overcurrent as follows:
  - When **BLOCK WHEN V MEM EXP** is set to "Yes," the directional element blocks the operation of any phase overcurrent element under directional control when voltage memory expires
  - When **BLOCK WHEN V MEM EXP** is set to "No," the directional element allows tripping of phase overcurrent elements under directional control when voltage memory expires

In all cases, directional blocking is permitted to resume when the polarizing voltage becomes greater than the polarizing voltage threshold.

5

Settings

PHASE DIR 1 FUNCTION — This setting enables and disables the phase directional overcurrent protection element.

PHASE DIR 1 SIGNAL SOURCE — This setting is used to select the source for the operating and polarizing signals. The operating current for the phase directional element is the phase current for the selected current source. The polarizing voltage is the line voltage from the phase VTs, based on the 90° or quadrature connection and shifted in the leading direction by the element characteristic angle (ECA).

PHASE DIR 1 BLOCK — Assertion of the operand assigned to this setting blocks operation of the phase directional overcurrent element.

PHASE DIR 1 ECA — This setting specifies the element characteristic angle, that is, the angle by which the polarizing voltage is shifted in the leading direction to achieve dependable operation. In the design of the UR-series elements, a block is applied to an element by asserting logic 1 at the blocking input. Program the phase directional overcurrent element using this setting so that the output is logic 1 for current in the non-tripping direction.

PHASE DIR 1 POL V THRESHOLD — This setting is used to establish the minimum level of voltage for which the phase angle measurement is healthy and reliable. Do not set this setting too low because the element can continue using the actual voltage already distorted by the fault instead of using healthy memory voltage—this can cause wrong directional discrimination.

PHASE DIR 1 BLOCK WHEN V MEM EXP — This setting is used to select the required operation upon expiration of voltage memory. When set to "Yes," the directional element blocks the operation of any phase overcurrent element under directional control, when voltage memory expires. When set to "No," the directional element allows tripping of phase overcurrent elements under directional control.

PHASE DIR 1 EVENTS — This setting enables and disables the logging of phase directional overcurrent events in the sequence of events recorder.

NOTE

The phase directional element responds to the forward load current. In the case of a following reverse fault, the element needs some time—in the order of 8 ms—to establish a blocking signal. Some protection elements, such as instantaneous overcurrent, respond to reverse faults before the blocking signal is established. Therefore, a coordination time of at least 10 ms must be added to all the instantaneous protection elements under the supervision of the phase directional element. If current reversal is of concern, a longer delay—in the order of 20 ms—is needed.

Figure 5-112: Phase directional logic

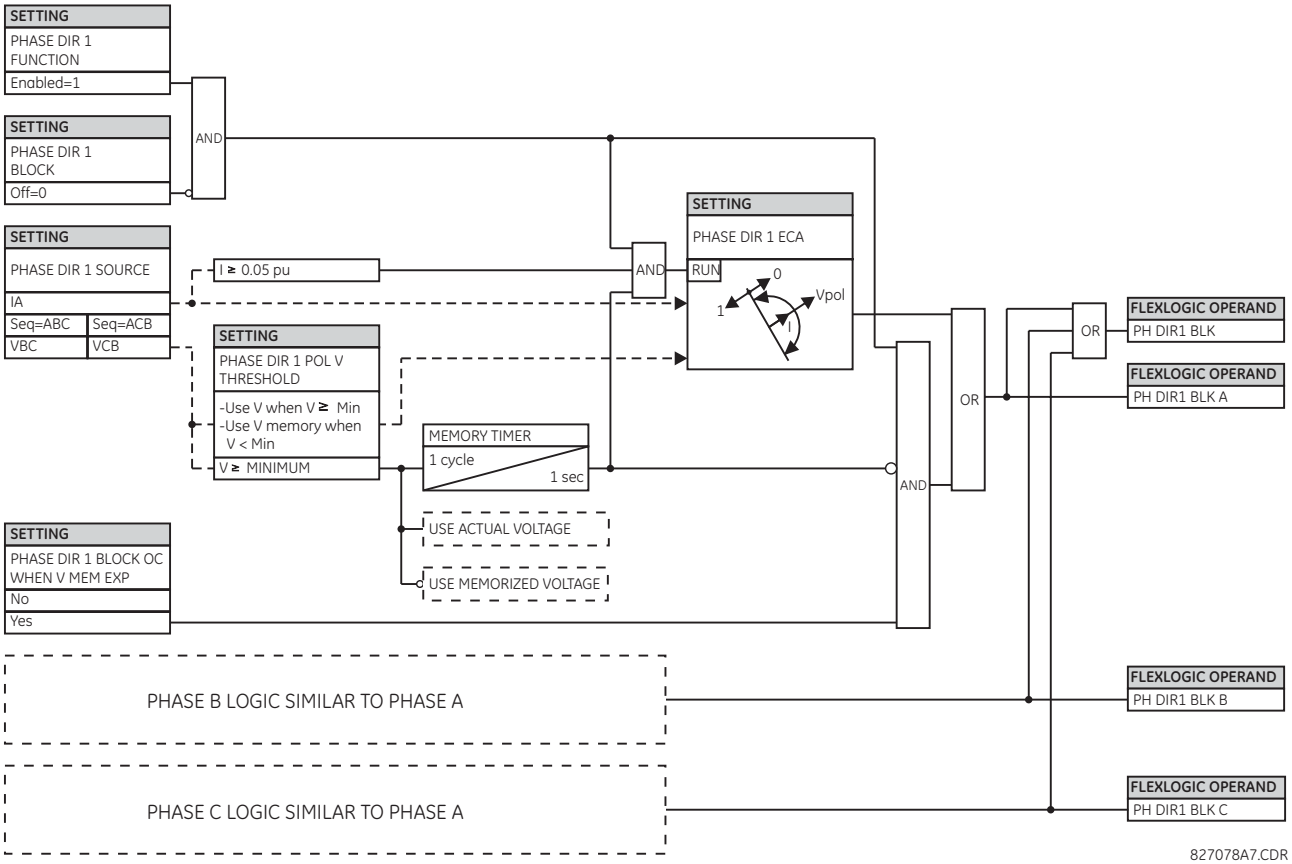

5.8.3.6 Phase current unbalance (ANSI 60P, IEC PVCB/PTOC)

SETTINGS ⇨⇩ GROUPED ELEMENTS ⇨ SETTING GROUP 1(6) ⇨⇩ PHASE CURRENT ⇨⇩ PHASE CURRENT UNBALANCE 1(3)

■ PHASE CURRENT ■ UNBALANCE 1	⇔	CUR UNBALCE 1 FUNCTION: Disabled	Range: Disabled, Enabled
	⇩	CUR UNBALCE 1 DIF SOURCE: SRC 1	Range: SRC 1, SRC 2, SRC 3, SRC 4, SRC 5, SRC 6
	⇩	CUR UNBALCE 1 BANK SOURCE: SRC 1	Range: SRC 1, SRC 2, SRC 3, SRC 4, SRC 5, SRC 6
	⇩	CUR UNBALCE 1 INHNT FACTOR A: 0.0000	Range: –0.1000 to 0.1000 in steps of 0.0001
		⇩	
	⇩	CUR UNBALCE 1 INHNT FACTOR C: 0.0000	Range: –0.1000 to 0.1000 in steps of 0.0001
	⇩	CUR UNBALCE 1 STG 1A PICKUP: 0.020 pu	Range: 0.001 to 5.000 pu in steps of 0.001
	⇩	CUR UNBALCE 1 STG 2A PICKUP: 0.030 pu	Range: 0.001 to 5.000 pu in steps of 0.001
	⇩	CUR UNBALCE 1 STG 3A PICKUP: 0.040 pu	Range: 0.001 to 5.000 pu in steps of 0.001

⇕	**CUR UNBALCE 1 STG 4A PICKUP: 0.050 pu**	Range: 0.001 to 5.000 pu in steps of 0.001
⇕	**CUR UNBALCE 1 STG 1B PICKUP: 0.020 pu**	Range: 0.001 to 5.000 pu in steps of 0.001
⇕	**CUR UNBALCE 1 STG 2B PICKUP: 0.030 pu**	Range: 0.001 to 5.000 pu in steps of 0.001
⇕	**CUR UNBALCE 1 STG 3B PICKUP: 0.040 pu**	Range: 0.001 to 5.000 pu in steps of 0.001
⇕	**CUR UNBALCE 1 STG 4B PICKUP: 0.050 pu**	Range: 0.001 to 5.000 pu in steps of 0.001
⇕	**CUR UNBALCE 1 STG 1C PICKUP: 0.020 pu**	Range: 0.001 to 5.000 pu in steps of 0.001
⇕	**CUR UNBALCE 1 STG 2C PICKUP: 0.030 pu**	Range: 0.001 to 5.000 pu in steps of 0.001
⇕	**CUR UNBALCE 1 STG 3C PICKUP: 0.040 pu**	Range: 0.001 to 5.000 pu in steps of 0.001
⇕	**CUR UNBALCE 1 STG 4C PICKUP: 0.050 pu**	Range: 0.001 to 5.000 pu in steps of 0.001
⇕	**CUR UNBALCE 1 STG 1 PKP DELAY: 30.00 s**	Range: 0.00 to 600.00 s in steps of 0.01
⇕	**CUR UNBALCE 1 STG 2 PKP DELAY: 10.00 s**	Range: 0.00 to 600.00 s in steps of 0.01
⇕	**CUR UNBALCE 1 STG 3 PKP DELAY: 1.00 s**	Range: 0.00 to 600.00 s in steps of 0.01
⇕	**CUR UNBALCE 1 STG 4 PKP DELAY: 0.20 s**	Range: 0.00 to 600.00 s in steps of 0.01
⇕	**CUR UNBALCE 1 DPO DELAY: 0.25 s**	Range: 0.00 to 600.00 s in steps of 0.01
⇕	**CUR UNBL 1 BLK STG1: Off**	Range: FlexLogic operand
	⇩	
⇕	**CUR UNBL 1 BLK STG4: Off**	Range: FlexLogic operand
⇕	**CUR UNBALCE 1 TARGET: Self-reset**	Range: Self-reset, Latched, Disabled
⇧	**CUR UNBALCE 1 EVENTS: Disabled**	Range: Disabled, Enabled

Up to three identical phase current unbalance elements, one per each CT/VT module configured in hardware, are provided.

The element responds to a differential current signal measured via window-type CTs as a vectorial current difference between two parallel banks. With the two capacitors in the same phase identical, the said differential current is zero. Small differences between the capacitors of a given phase result in a small circulating current. Subtracting an adequate portion of the total bank current in a given phase compensates for this inherent unbalance current.

The relay allows manual setting of the inherent unbalance factors, or automatically via the **COMMANDS** menu. For more information, see the Application of Settings chapter.

Figure 5-113: Phase current unbalance basic connections

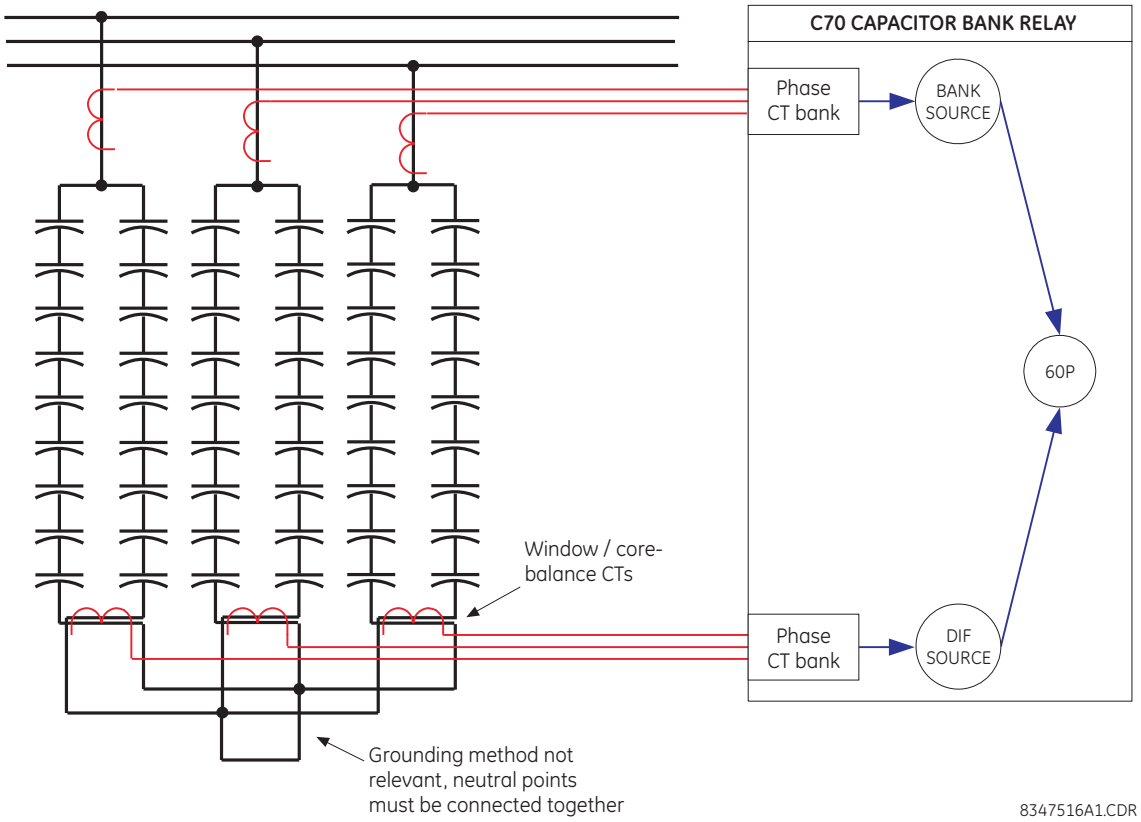

The following settings are available for all three elements.

CUR UNBALCE 1 DIF SOURCE — Indicate signal source that signifies the differential currents between the two parallel banks. In order to improve accuracy, a relatively low-ratio window CT can be used for instrumentation. CT primary and secondary ratings are entered under a separate menu. Directionality of wiring these current signals is not important for proper functioning of the feature as long as the sign of the factor compensating for the inherent unbalance is appropriate. For ease of analysis and consistency of relay records, wire all three currents with the same polarity.

CUR UNBALCE 1 BANK SOURCE — Indicate signal source that signifies the total current of the two parallel banks. Either the main CTs are placed in a way ensuring measurement of the total current, or the currents of individual banks are summed externally to the relay by paralleling the main CTs, or summed up internally to the relay using the configuration mechanism of sources. The total bank current is used for compensation for the inherent bank unbalance. CT primary and secondary ratings are entered under a separate menu. Directionality of wiring these current signals is not important for proper functioning of the feature as long as the sign of the factor compensating for the inherent unbalance is appropriate. For ease of analysis and consistency of relay records, wire all three currents with the same polarity. If any of the compensating factors is non-zero, the BANK SOURCE must have phase CT current configured for this function to run.

CUR UNBALCE 1 INHNT FACTOR A(B,C) — This setting specifies the compensating factor for the inherent unbalance between the two banks. Normally, the compensating factors are small numbers being a ratio of the difference between the two impedances, and the sum of the two impedances. For example, with 1% difference between the impedances, the factor is (1-0.99)/(1+0.99) = 0.005. The sign of the compensating factor depends on the polarity of wiring the differential signals, and on which of the two banks has the lower impedance. Quality of balancing the bank with a given value of this setting can be viewed under the **ACTUAL VALUES** menu. An auto-setting procedure is available under the **COMMANDS** menu to calculate the compensating factors automatically. Setting the compensating factors to zero effectively disables the compensation and turns this feature into a plain overcurrent element responding to the differential (split phase) currents.

CUR UNBALCE 1 STG 1A PICKUP to **CUR UNBALCE 1 STG 4C PICKUP** — These settings specify pickup thresholds for stages 1 through 4 in phases A through C in per-units (pu) of the nominal current of the differential source. A value of 1 pu is the nominal secondary current, or the nominal primary current, respectively, as configured under the differential source of this function.

CUR UNBALCE 1 STG 1 PKP DELAY to **CUR UNBALCE 1 STG 4 PKP DELAY** — This setting specifies the pickup time delay, individually per each stage of alarming/tripping. Each of the 12 comparators (four stages in three phases) uses an individual timer, but settings for these timers are controlled individually per each stage, not per phase. The timers use a common drop out time delay specified by the next setting.

CUR UNBALCE 1 DPO DELAY — This setting controls a drop-out delay for the operate FlexLogic operands. Individual stages apply individually configurable pickup delays, but use this common drop-out delay.

CUR UNBL 1 BLK STG1 to **CUR UNBL 1 BLK STG4** — These settings are used to block the function on a per-stage basis when required. At minimum this function is blocked when the two banks are not paralleled. When unblocked, the function becomes operational after five cycles of intentional delay. High-set instantaneous protection on energization can be provided by a separate instantaneous overcurrent function.

Figure 5-114: Phase current unbalance logic

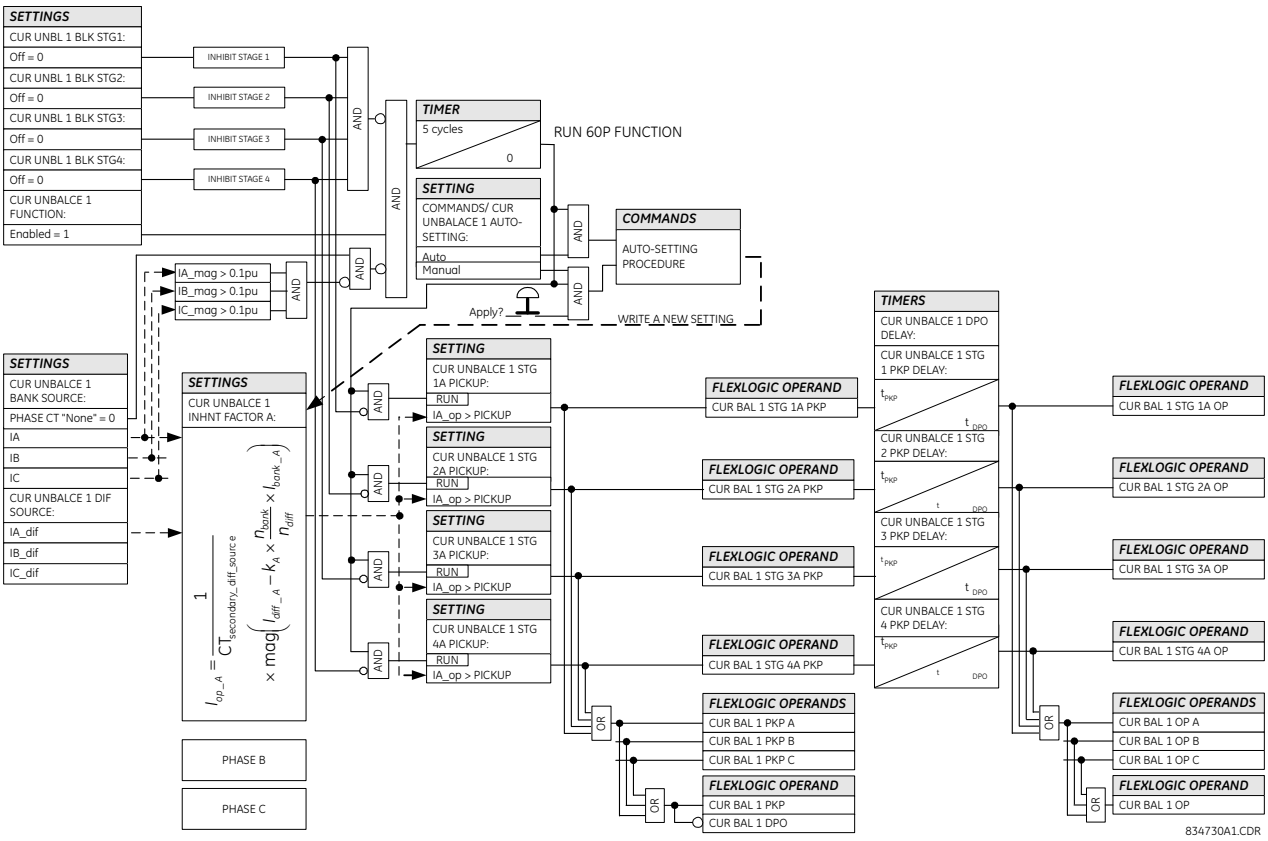

5.8.4 Neutral current

5.8.4.1 Menu

SETTINGS ⇨⇩ GROUPED ELEMENTS ⇨ SETTING GROUP 1(6) ⇨⇩ NEUTRAL CURRENT

■ NEUTRAL CURRENT ■	⇔	■ NEUTRAL TOC 1 ■	See below

⇩

⇕	■ NEUTRAL TOC 6 ■	
⇕	■ NEUTRAL IOC 1 ■	See page 5-238
	⇩	
⇕	■ NEUTRAL IOC 12 ■	
⇕	■ NEUTRAL ■ DIRECTIONAL OC1	See page 5-239
⇕	■ NEUTRAL CURRENT ■ UNBALANCE 1	See page 5-244
	⇩	
⇧	■ NEUTRAL CURRENT ■ UNBALANCE 3	

The C70 contains protection elements for neutral time overcurrent (ANSI device 51G), neutral instantaneous overcurrent (ANSI device 50G), and neutral current unbalance (ANSI device 60N). A maximum of six ground time overcurrent and 12 ground instantaneous overcurrent elements are available, dependent on the CT/VT modules ordered with the relay. Three neutral current unbalance elements are available.

5.8.4.2 Neutral time overcurrent (ANSI 51N, IEC PTOC)

SETTINGS ⇨⇩ GROUPED ELEMENTS ⇨ SETTING GROUP 1(6) ⇨⇩ NEUTRAL CURRENT ⇨ NEUTRAL TOC1(6)

■ NEUTRAL TOC 1 ■	⇔	NEUTRAL TOC1 FUNCTION: Disabled	Range: Disabled, Enabled
	⇕	NEUTRAL TOC1 SIGNAL SOURCE: SRC 1	Range: SRC 1, SRC 2, SRC 3, SRC 4, SRC 5, SRC 6
	⇕	NEUTRAL TOC1 INPUT: Phasor	Range: Phasor, RMS
	⇕	NEUTRAL TOC1 PICKUP: 1.000 pu	Range: 0.020 to 30.000 pu in steps of 0.001
	⇕	NEUTRAL TOC1 CURVE: IEEE Mod Inv	Range: see Overcurrent Curve Types table
	⇕	NEUTRAL TOC1 TD MULTIPLIER: 1.00	Range: 0.00 to 600.00 in steps of 0.01
	⇕	NEUTRAL TOC1 RESET: Instantaneous	Range: Instantaneous, Timed
	⇕	NEUTRAL TOC1 BLOCK: Off	Range: FlexLogic operand
	⇕	NEUTRAL TOC1 TARGET: Self-reset	Range: Self-reset, Latched, Disabled
	⇧	NEUTRAL TOC1 EVENTS: Disabled	Range: Disabled, Enabled

The neutral time overcurrent element can provide a desired time-delay operating characteristic versus the applied current or be used as a simple definite time element. The neutral current input value is a quantity calculated as 3Io from the phase currents and can be programmed as fundamental phasor magnitude or total waveform RMS magnitude as required by the application.

Two methods of resetting operation are available: “Timed” and “Instantaneous” (see the Inverse TOC Curve Characteristics section for details on curve setup, trip times, and reset operation). When the element is blocked, the time accumulator resets according to the reset characteristic. For example, if the element reset characteristic is set to “Instantaneous” and the element is blocked, the time accumulator clears immediately.

NEUTRAL TOC1 FUNCTION — This setting enables and disables the neutral time overcurrent protection element.

NEUTRAL TOC1 SIGNAL SOURCE — This setting selects the signal source for the neutral time overcurrent protection element.

NEUTRAL TOC1 INPUT — This setting selects how neutral current input quantities are interpreted by the C70. Inputs can be selected as fundamental phasor magnitudes or total waveform RMS magnitudes as required by the application.

NEUTRAL TOC1 PICKUP — This setting specifies the neutral time overcurrent pickup level in per-unit values.

NEUTRAL TOC1 CURVE — This setting selects the inverse time overcurrent curve style.

NEUTRAL TOC1 TD MULTIPLIER — This setting specifies a multiple of the base curve shape specified by the **CURVE** setting. Programming this value to zero results in an instantaneous response to all current levels above pickup.

NEUTRAL TOC1 RESET — The "Instantaneous" reset method is intended for applications with other relays, such as most static relays, which set the energy capacity directly to zero when the current falls below the reset threshold. The "Timed" reset method can be used where the relay must coordinate with electromechanical relays.

NEUTRAL TOC1 BLOCK — Assertion of the operand assigned to this setting blocks operation of the neutral time overcurrent element.

NEUTRAL TOC1 EVENTS — This setting enables and disables the logging of neutral time overcurrent events in the sequence of events recorder.

Figure 5-115: Neutral time overcurrent 1 logic

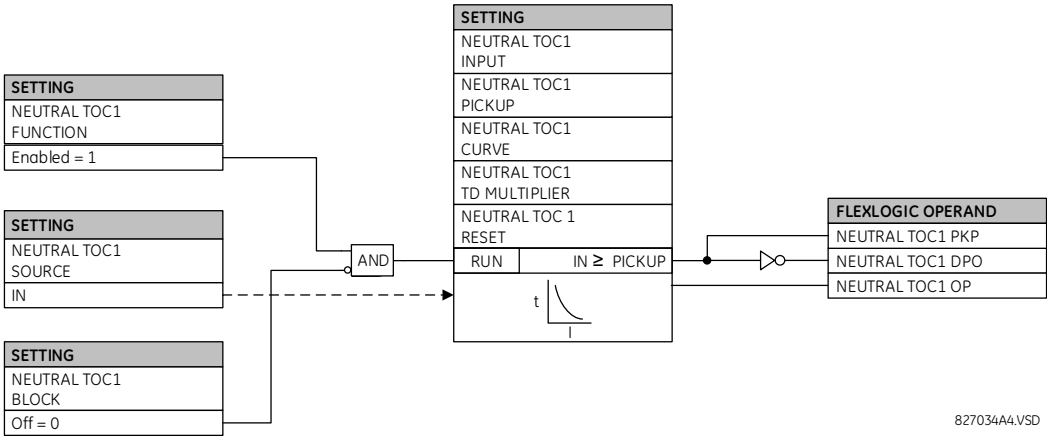

5.8.4.3 Neutral instantaneous overcurrent (ANSI 50N, IEC PIOC)

SETTINGS ⇨⇩ GROUPED ELEMENTS ⇨ SETTING GROUP 1(6) ⇨⇩ NEUTRAL CURRENT ⇨⇩ NEUTRAL IOC1(6)

■ NEUTRAL IOC 1 ■	⇔	NEUTRAL IOC1 FUNCTION: Disabled	Range: Disabled, Enabled
	⇩	NEUTRAL IOC1 SIGNAL SOURCE: SRC 1	Range: SRC 1, SRC 2, SRC 3, SRC 4, SRC 5, SRC 6
	⇩	NEUTRAL IOC1 PICKUP: 1.000 pu	Range: 0.020 to 30.000 pu in steps of 0.001
	⇩	NEUTRAL IOC1 PICKUP DELAY: 0.00 s	Range: 0.00 to 600.00 s in steps of 0.01
	⇩	NEUTRAL IOC1 RESET DELAY: 0.00 s	Range: 0.00 to 600.00 s in steps of 0.01
	⇩	NEUTRAL IOC1 BLOCK: Off	Range: FlexLogic operand
	⇩	NEUTRAL IOC1 TARGET: Self-reset	Range: Self-reset, Latched, Disabled
	⇩	NEUTRAL IOC1 EVENTS: Disabled	Range: Disabled, Enabled

The neutral instantaneous overcurrent element can be used as an instantaneous function with no intentional delay or as a definite time function. The element essentially responds to the magnitude of a neutral current fundamental frequency phasor calculated from the phase currents. A positive-sequence restraint is applied for better performance. A small portion (6.25%) of the positive-sequence current magnitude is subtracted from the zero-sequence current magnitude when forming the operating quantity of the element as follows:

$$I_{op} = 3 \times (|I_0| - K \times |I_1|) \text{ where } K = 1/16 \qquad \textbf{Eq. 5-16}$$

The positive-sequence restraint allows for more sensitive settings by counterbalancing spurious zero-sequence currents resulting from:

- System unbalances under heavy load conditions
- Transformation errors of current transformers (CTs) during double-line and three-phase faults
- Switch-off transients during double-line and three-phase faults

The positive-sequence restraint must be considered when testing for pickup accuracy and response time (multiple of pickup). The operating quantity depends on how test currents are injected into the relay, where single-phase injection is $I_{op} = 0.9375 \times I_{injected}$ and three-phase pure zero-sequence injection is $I_{op} = 3 \times I_{injected}$

NEUTRAL IOC1 FUNCTION — This setting enables and disables the neutral instantaneous overcurrent protection element.

NEUTRAL IOC1 SIGNAL SOURCE — This setting selects the signal source for the neutral instantaneous overcurrent protection element.

NEUTRAL IOC1 PICKUP — This setting specifies the neutral instantaneous overcurrent pickup level in per-unit values.

NEUTRAL IOC1 PICKUP DELAY — This setting delays the assertion of the NEUTRAL IOC OP operands. It is used to achieve timing coordination with other elements and relays.

NEUTRAL IOC1 RESET DELAY — This setting specifies a delay for the reset of the neutral instantaneous overcurrent element between the operate output state and the return to logic 0 after the input passes outside the defined pickup range. This setting is used to ensure that the relay output contacts are closed long enough to ensure reception by downstream equipment.a

NEUTRAL IOC1 BLOCK — Assertion of the operand assigned to this setting blocks operation of the neutral instantaneous overcurrent element.

NEUTRAL IOC1 EVENTS — This setting enables and disables the logging of neutral instantaneous overcurrent events in the sequence of events recorder.

Figure 5-116: Neutral IOC1 logic

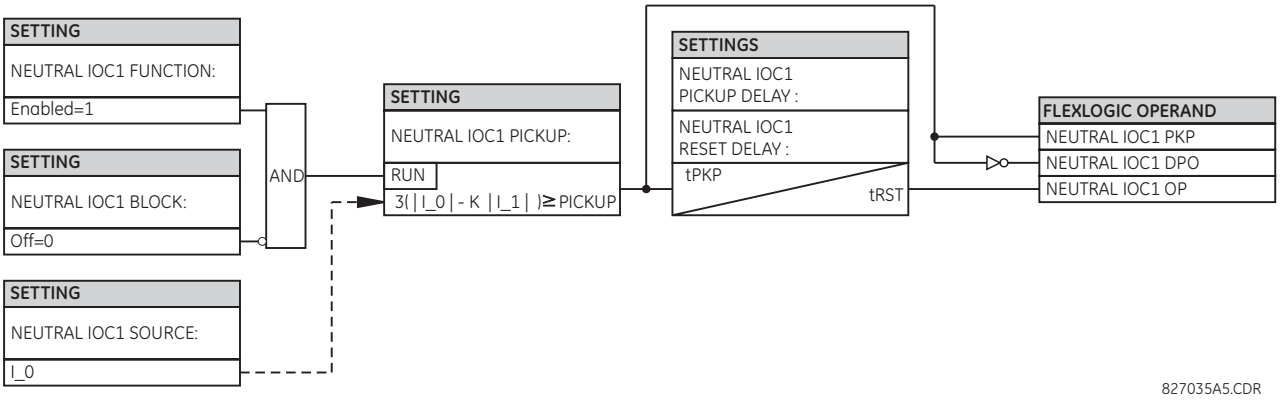

5.8.4.4 Neutral directional overcurrent (ANSI 67N, IEC PDEF/PTOC)

SETTINGS ⇨⇩ GROUPED ELEMENTS ⇨ SETTING GROUP 1(6) ⇨⇩ NEUTRAL CURRENT ⇨⇩ NEUTRAL DIRECTIONAL OC1

■ NEUTRAL ■ DIRECTIONAL OC1	⇔	NEUTRAL DIR OC1 FUNCTION: Disabled	Range: Disabled, Enabled

⇕	**NEUTRAL DIR OC 1 SOURCE: SRC 1**	Range: SRC 1, SRC 2, SRC 3, SRC 4, SRC 5, SRC 6
⇕	**NEUTRAL DIR OC1 POLARIZING: Voltage**	Range: Voltage, Current, Dual, Dual-V, Dual-I
⇕	**NEUTRAL DIR OC1 POL VOLT: Calculated V0**	Range: Calculated V0, Measured VX
⇕	**NEUTRAL DIR OC1 OP CURR: Calculated 3I0**	Range: Calculated 3I0, Measured IG
⇕	**NEUTRAL DIR OC1 POS-SEQ RESTRAINT: 0.063**	Range: 0.000 to 0.500 in steps of 0.001
⇕	**NEUTRAL DIR OC1 OFFSET: 0.00 Ω**	Range: 0.00 to 250.00 Ω in steps of 0.01
⇕	**NEUTRAL DIR OC1 FWD ECA: 75° Lag**	Range: –90 to 90° in steps of 1
⇕	**NEUTRAL DIR OC1 FWD LIMIT ANGLE: 90°**	Range: 40 to 90° in steps of 1
⇕	**NEUTRAL DIR OC1 FWD PICKUP: 0.050 pu**	Range: 0.006 to 30.000 pu in steps of 0.001
⇕	**NEUTRAL DIR OC1 REV LIMIT ANGLE: 90°**	Range: 40 to 90° in steps of 1
⇕	**NEUTRAL DIR OC1 REV PICKUP: 0.050 pu**	Range: 0.006 to 30.000 pu in steps of 0.001
⇕	**NEUTRAL DIR OC1 BLK: Off**	Range: FlexLogic operand
⇕	**NEUTRAL DIR OC1 TARGET: Self-reset**	Range: Self-reset, Latched, Disabled
⇧	**NEUTRAL DIR OC1 EVENTS: Disabled**	Range: Disabled, Enabled

The neutral directional overcurrent element provides both forward and reverse fault direction indications for the NEUTRAL DIR OC1 FWD and NEUTRAL DIR OC1 REV operands, respectively. The output operand is asserted if the magnitude of the operating current is above a pickup level (overcurrent unit) and the fault direction is seen as forward or reverse, respectively (directional unit).

The **overcurrent unit** responds to the magnitude of a fundamental frequency phasor of either the neutral current calculated from the phase currents or the ground current. There are separate pickup settings for the forward-looking and reverse-looking functions. If set to use the calculated 3I_0, the element applies a positive-sequence restraint for better performance: a small user-programmable portion of the positive-sequence current magnitude is subtracted from the zero-sequence current magnitude when forming the operating quantity.

$$I_{op} = 3 \times (|I_0| - K \times |I_1|) \qquad \textbf{Eq. 5-17}$$

The positive-sequence restraint allows for more sensitive settings by counterbalancing spurious zero-sequence currents resulting from

- System unbalances under heavy load conditions
- Transformation errors of current transformers (CTs) during double-line and three-phase faults
- Switch-off transients during double-line and three-phase faults

The positive-sequence restraint must be considered when testing for pickup accuracy and response time (multiple of pickup). The operating quantity depends on the way the test currents are injected into the relay (single-phase injection: $I_{op} = (1 - K) \times I_{injected}$; three-phase pure zero-sequence injection: $I_{op} = 3 \times I_{injected}$.

The positive-sequence restraint is removed for low currents. If the positive-sequence current is below 0.8 pu, the restraint is removed by changing the constant K to zero. This facilitates better response to high-resistance faults when the unbalance is very small and there is no danger of excessive CT errors as the current is low.

The **directional unit** uses the zero-sequence current (I_0) or ground current (IG) for fault direction discrimination and can be programmed to use either zero-sequence voltage ("Calculated V0" or "Measured VX"), ground current (IG), or both for polarizing. The zero-sequence current (I_0) must be greater than the **PRODUCT SETUP ⇨⇩ DISPLAY PROPERTIES ⇨⇩ CURRENT CUT-OFF LEVEL** setting value and IG must be greater than 0.05 pu to be validated as the operating quantity for directional current. The following tables define the neutral directional overcurrent element. V_0 is the zero-sequence voltage, I_0 is the zero-sequence current, ECA is the element characteristic angle, and IG is the ground current.

Table 5-35: Quantities for "calculated 3I0" configuration

Directional unit				Overcurrent unit
Polarizing mode	**Direction**	**Compared phasors**		
Voltage	Forward	–V_0 + Z_offset × I_0	I_0 × 1∠ECA	$I_{op} = 3 \times (\lvert I_0 \rvert - K \times \lvert I_1 \rvert)$ if $\lvert I_1 \rvert > 0.8$ pu $I_{op} = 3 \times (\lvert I_0 \rvert)$ if $\lvert I_1 \rvert \le 0.8$ pu
	Reverse	–V_0 + Z_offset × I_0	–I_0 × 1∠ECA	
Current	Forward	IG	I_0	
	Reverse	IG	–I_0	
Dual, Dual-V, Dual-I	Forward	–V_0 + Z_offset × I_0	I_0 × 1∠ECA	
		or		
		IG	I_0	
	Reverse	–V_0 + Z_offset × I_0	–I_0 × 1∠ECA	
		or		
		IG	–I_0	

Table 5-36: Quantities for "measured IG" configuration

Directional unit				Overcurrent unit
Polarizing mode	**Direction**	**Compared phasors**		
Voltage	Forward	–V_0 + Z_offset × IG/3	IG × 1∠ECA	$I_{op} = \lvert IG \rvert$
	Reverse	–V_0 + Z_offset × IG/3	–IG × 1∠ECA	

where

$$V_0 = \frac{1}{3}(VAG + VBG + VCG) = \text{zero sequence voltage}$$

$$I_0 = \frac{1}{3}IN = \frac{1}{3}(IA + IB + IC) = \text{zero sequence current}$$

ECA = element characteristic angle
IG = ground current
Z_offset is the offset impedance, for which magnitude is the OFFSET setting and angle is the FWD ECA

When **NEUTRAL DIR OC1 POL VOLT** is set to "Measured VX," one-third of this voltage is used in place of V_0. The following figure explains the usage of the voltage polarized directional unit of the element.

The figure shows the voltage-polarized phase angle comparator characteristics for a phase A to ground fault, with:

- ECA = 90° (element characteristic angle = centerline of operating characteristic)
- FWD LA = 80° (forward limit angle = the ± angular limit with the ECA for operation)
- REV LA = 80° (reverse limit angle = the ± angular limit with the ECA for operation)

Take the bias into account when using the neutral directional overcurrent element to directionalize other protection elements.

Figure 5-117: Neutral directional voltage-polarized characteristics

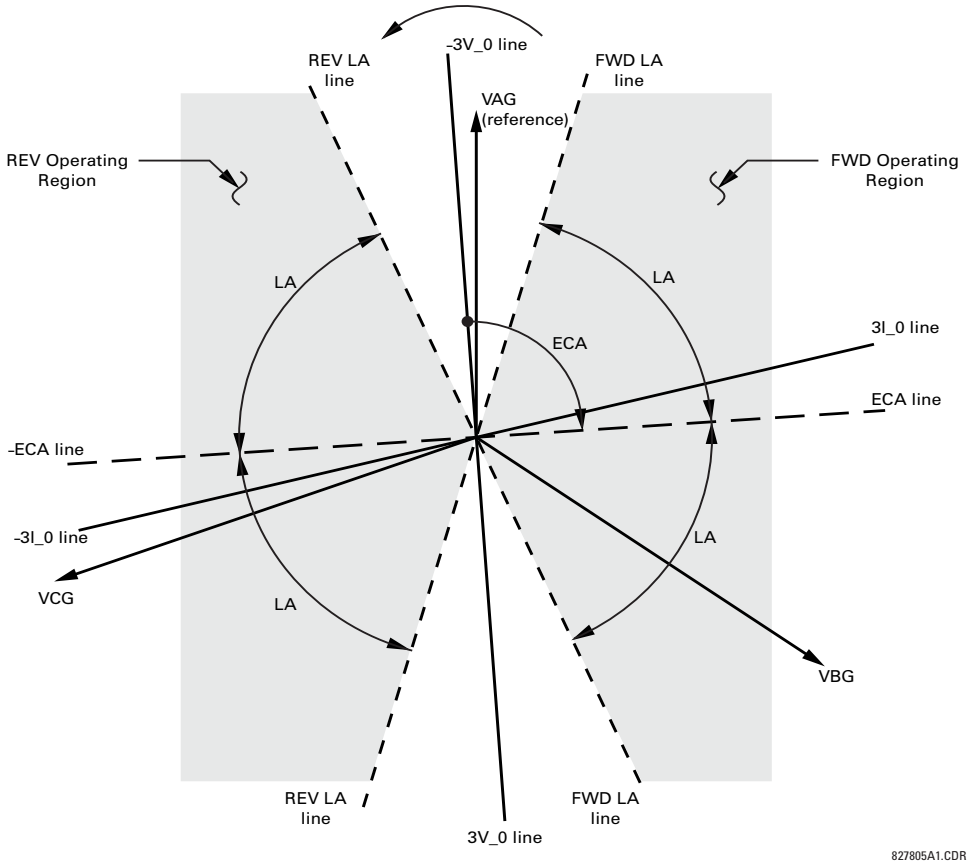

NEUTRAL DIR OC1 POLARIZING — This setting selects the polarizing mode for the directional unit.

- If "Voltage" polarizing is selected, the element uses the zero-sequence voltage angle for polarization. The user can use either the zero-sequence voltage V_0 calculated from the phase voltages, or the zero-sequence voltage supplied externally as the auxiliary voltage V_X, both from the **NEUTRAL DIR OC1 SOURCE**.

  The calculated V_0 can be used as polarizing voltage only if the voltage transformers are connected in Wye. The auxiliary voltage can be used as the polarizing voltage provided **SYSTEM SETUP ⇨ AC INPUTS ⇨⇩ VOLTAGE BANK ⇨⇩ AUXILIARY VT CONNECTION** is set to "Vn" and the auxiliary voltage is connected to a zero-sequence voltage source (such as broken delta connected secondary of VTs).

  The zero-sequence voltage V_0 must be greater than 0.02 pu to be validated for use as a polarizing signal. Additionally, when offset impedance is applied and zero-sequence current is above 0.2 pu, compensated zero-sequence voltage -V_0 + Z_offset × I_0 has to be above 0.02 pu in order to discriminate fault direction; otherwise when zero-sequence current is less than 0.2 pu, -V_0 is then used as the polarizing signal. If the polarizing signal is invalid, neither forward nor reverse indication is given.

- If "Current" polarizing is selected, the element uses the ground current angle connected externally and configured under **NEUTRAL OC1 SOURCE** for polarization. The ground CT must be connected between the ground and neutral point of an adequate local source of ground current. The ground current must be greater than 0.05 pu to be validated as a polarizing signal. If the polarizing signal is not valid, neither forward nor reverse indication is given. In addition, the zero-sequence current (I_0) must be greater than the **PRODUCT SETUP ⇨⇩ DISPLAY PROPERTIES ⇨⇩ CURRENT CUT-OFF LEVEL** setting value.

  For a choice of current polarizing, it is recommended that the polarizing signal be analyzed to ensure that a known direction is maintained irrespective of the fault location. For example, if using an autotransformer neutral current as a polarizing source, ensure that a reversal of the ground current does not occur for a high-side fault. Assume that the

low-side system impedance is minimal when checking for this condition. A similar situation arises for a wye/delta/wye transformer, where current in one transformer winding neutral can reverse when faults on both sides of the transformer are considered.

- If “Dual” polarizing is selected, the element performs both directional comparisons as described. A given direction is confirmed if either voltage or current comparators indicate so. If a conflicting (simultaneous forward and reverse) indication occurs, the forward direction overrides the reverse direction.
- If "Dual-V" polarizing is selected, "Voltage" polarizing is performed and "Current" polarizing is ignored if the voltage polarizing signal is valid; otherwise "Current" polarizing is performed if the current polarizing signal is valid. If neither of them is valid, neither forward nor reverse indication is given.
- If "Dual-I" polarizing is selected, "Current" polarizing is performed and "Voltage" polarizing is ignored if the current polarizing signal is valid; otherwise "Voltage" polarizing is performed if the voltage polarizing signal is valid. If neither of them is valid, neither forward nor reverse indication is given.

NEUTRAL DIR OC1 POL VOLT — Selects the polarizing voltage used by the directional unit when "Voltage," "Dual," "Dual-V," or "Dual-I" polarizing mode is set. The polarizing voltage can be programmed to be either the zero-sequence voltage calculated from the phase voltages ("Calculated V0") or supplied externally as an auxiliary voltage ("Measured VX").

NEUTRAL DIR OC1 OP CURR — This setting indicates whether the 3I_0 current calculated from the phase currents, or the ground current is used by this protection. This setting acts as a switch between the neutral and ground modes of operation (ANSI devices 67N and 67G). If set to “Calculated 3I0,” the element uses the phase currents and applies the positive-sequence restraint. If set to “Measured IG,” the element uses ground current supplied to the ground CT of the CT bank configured as **NEUTRAL DIR OC1 SOURCE**. If this setting is “Measured IG,” then the **NEUTRAL DIR OC1 POLARIZING** setting must be “Voltage”, as it is not possible to use the ground current as an operating and polarizing signal simultaneously. IG current has to be above 0.05 ps to be used as operate quantity.

NEUTRAL DIR OC1 POS-SEQ RESTRAINT — This setting controls the amount of the positive-sequence restraint. Set it to 0.063 for backward compatibility with firmware revision 3.40 and older. Set it to zero to remove the restraint. Set it higher if large system unbalances or poor CT performance are expected.

NEUTRAL DIR OC1 OFFSET — This setting specifies the offset impedance used by this protection. The primary application for the offset impedance is to guarantee correct identification of fault direction on series compensated lines. In regular applications, the offset impedance ensures proper operation even if the zero-sequence voltage at the relaying point is very small. If this is the intent, the offset impedance is not to be larger than the zero-sequence impedance of the protected circuit. Practically, it shall be several times smaller. Enter the offset impedance in secondary ohms.

NEUTRAL DIR OC1 FWD ECA — This setting defines the characteristic angle (ECA) for the forward direction in the "Voltage" polarizing mode. The "Current" polarizing mode uses a fixed ECA of 0°. The ECA in the reverse direction is the angle set for the forward direction shifted by 180°.

NEUTRAL DIR OC1 FWD LIMIT ANGLE — This setting defines a symmetrical (in both directions from the ECA) limit angle for the forward direction.

NEUTRAL DIR OC1 FWD PICKUP — This setting defines the pickup level for the overcurrent unit of the element in the forward direction. When selecting this setting, keep in mind that the design uses a positive-sequence restraint technique for the “Calculated 3I0” mode of operation.

NEUTRAL DIR OC1 REV LIMIT ANGLE — This setting defines a symmetrical (in both directions from the ECA) limit angle for the reverse direction.

NEUTRAL DIR OC1 REV PICKUP — This setting defines the pickup level for the overcurrent unit of the element in the reverse direction. When selecting this setting, keep in mind that the design uses a positive-sequence restraint technique for the “Calculated 3I0” mode of operation.

Figure 5-118: Neutral directional overcurrent logic

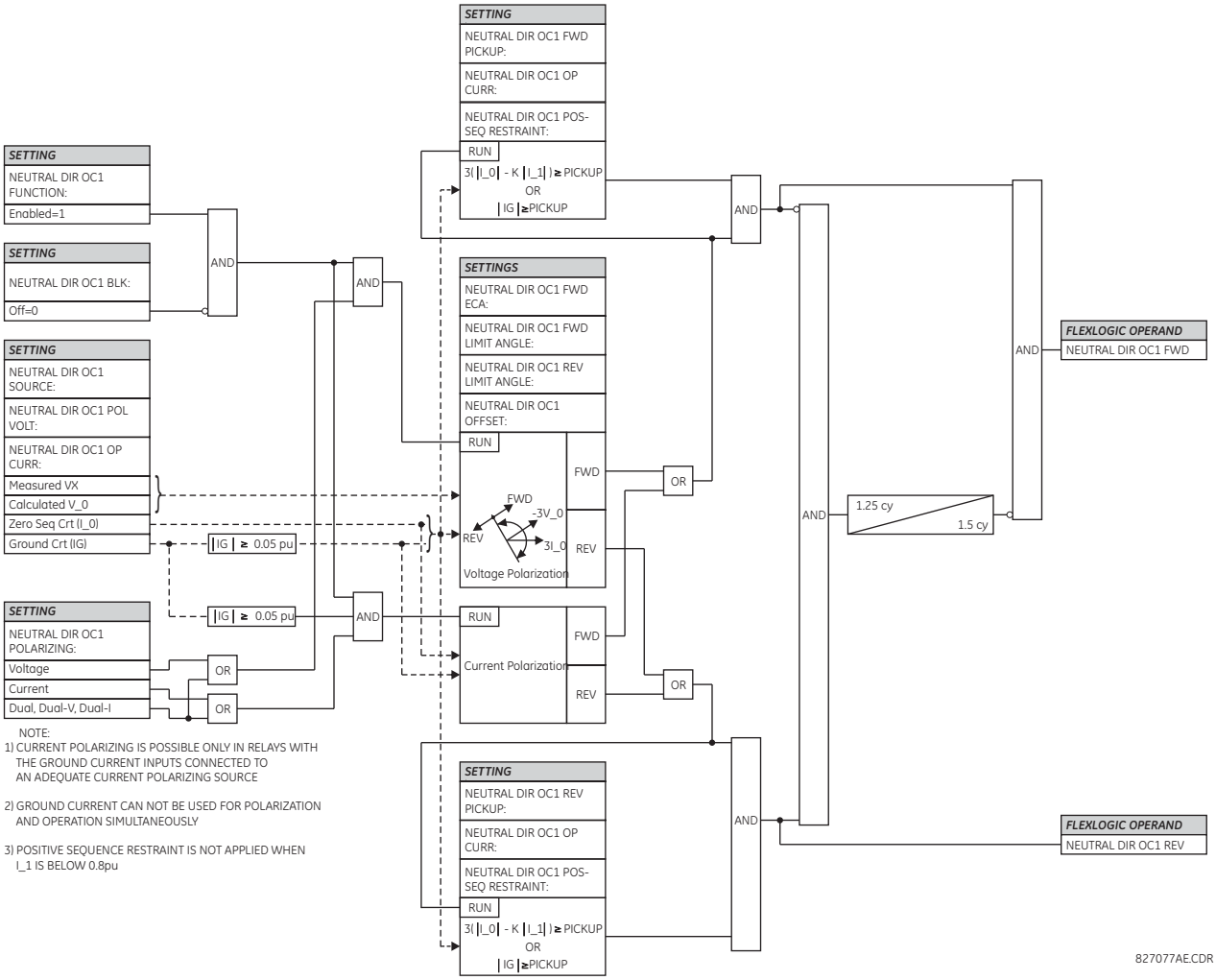

5.8.4.5 Neutral current unbalance (ANSI 60N, IEC PVCB/PTOC)

SETTINGS ⇨⇩ GROUPED ELEMENTS ⇨ SETTING GROUP 1(6) ⇨⇩ NEUTRAL CURRENT ⇨⇩ NEUTRAL CURRENT UNBALANCE 1(3)

■ NEUTRAL CURRENT ■ UNBALANCE 1	⇔	**NTRL CUR UNBALCE 1 FUNCTION: Disabled**	Range: Disabled, Enabled
	⇕	**NTRL CUR UNBALCE 1 BANK SOURCE: SRC 1**	Range: SRC 1, SRC 2, SRC 3, SRC 4, SRC 5, SRC 6
	⇕	**NTRL CUR UNBALCE 1 K MAG: 0.0000**	Range: 0.0000 to 0.1500 in steps of 0.0001
	⇕	**NTRL CUR UNBALCE 1 K ANG: 0°**	Range: 0 to 359° in steps of 1
	⇕	**NTRL CUR UNBALCE 1 STG1 PKP: 0.020 pu**	Range: 0.001 to 5.000 pu in steps of 0.001
	⇕	**NTRL CUR UNBALCE 1 STG1 SLOPE: 2.0%**	Range: 0.0 to 10.% in steps of 0.1
	⇕	**NTRL CUR UNBALCE 1 STG2 PKP: 0.030 pu**	Range: 0.001 to 5.000 pu in steps of 0.001

⇕	**NTRL CUR UNBALCE 1 STG2 SLOPE: 2.0%**	Range: 0.0 to 10.% in steps of 0.1
⇕	**NTRL CUR UNBALCE 1 STG3 PKP: 0.040 pu**	Range: 0.001 to 5.000 pu in steps of 0.001
⇕	**NTRL CUR UNBALCE 1 STG3 SLOPE: 2.0%**	Range: 0.0 to 10.% in steps of 0.1
⇕	**NTRL CUR UNBALCE 1 STG4 PKP: 0.050 pu**	Range: 0.001 to 5.000 pu in steps of 0.001
⇕	**NTRL CUR UNBALCE 1 STG4 SLOPE: 5.0%**	Range: 0.0 to 10.% in steps of 0.1
⇕	**NTRL CUR UNBALCE 1 STG1 DEL: 30.00 s**	Range: 0.00 to 600.00 s in steps of 0.01
⇕	**NTRL CUR UNBALCE 1 STG2 DEL: 10.00 s**	Range: 0.00 to 600.00 s in steps of 0.01
⇕	**NTRL CUR UNBALCE 1 STG3 DEL: 1.00 s**	Range: 0.00 to 600.00 s in steps of 0.01
⇕	**NTRL CUR UNBALCE 1 STG4 DEL: 0.20 s**	Range: 0.00 to 600.00 s in steps of 0.01
⇕	**NTRL CUR UNBALCE 1 DPO DELAY: 0.25 s**	Range: 0.00 to 600.00 s in steps of 0.01
⇕	**NTRL CUR 1 BLK STG1: Off**	Range: FlexLogic operand
⇕	**NTRL CUR 1 BLK STG2: Off**	Range: FlexLogic operand
⇕	**NTRL CUR 1 BLK STG3: Off**	Range: FlexLogic operand
⇕	**NTRL CUR 1 BLK STG4: Off**	Range: FlexLogic operand
⇕	**NTRL CUR UNBALCE 1 TARGET: Self-reset**	Range: Self-reset, Latched, Disabled
⇧	**NTRL CUR UNBALCE 1 EVENTS: Disabled**	Range: Disabled, Enabled

Up to three identical neutral current unbalance elements, one per each installed CT/VT module.

The neutral current unbalance element responds to a differential current signal measured as a vectorial current difference between neutral currents of parallel banks. In case of ungrounded banks, regular, preferably low-ratio CT can be used. In case of grounded banks, a window or core-balance CT shall be used for increased accuracy/sensitivity.

The function applies simplified compensation for the inherent bank unbalance. Accurate compensation requires three balancing factors that are difficult to measure in practical situations. Instead, a simple and practical compensation responding to both the positive-sequence current and negative-sequence current is applied. This method is easy to apply and remains accurate as long as the zero-sequence bank currents are relatively small. Under large zero-sequence bank currents, the applied method of compensation for the inherent bank unbalance is less accurate. The solution to this problem is to use a small portion of the zero-sequence current at the bank terminals to produce extra restraint and preserve high sensitivity of this protection method.

By setting both the slope and the inherent unbalance compensating factor to zero, one can apply the function as a plain overcurrent element responding to the split-phase neutral current.

The relay allows manual setting of the inherent unbalance factor or automatic setting via a dedicated command. For more information, see the Application of Settings chapter.

Figure 5-119: Neutral current unbalance connections

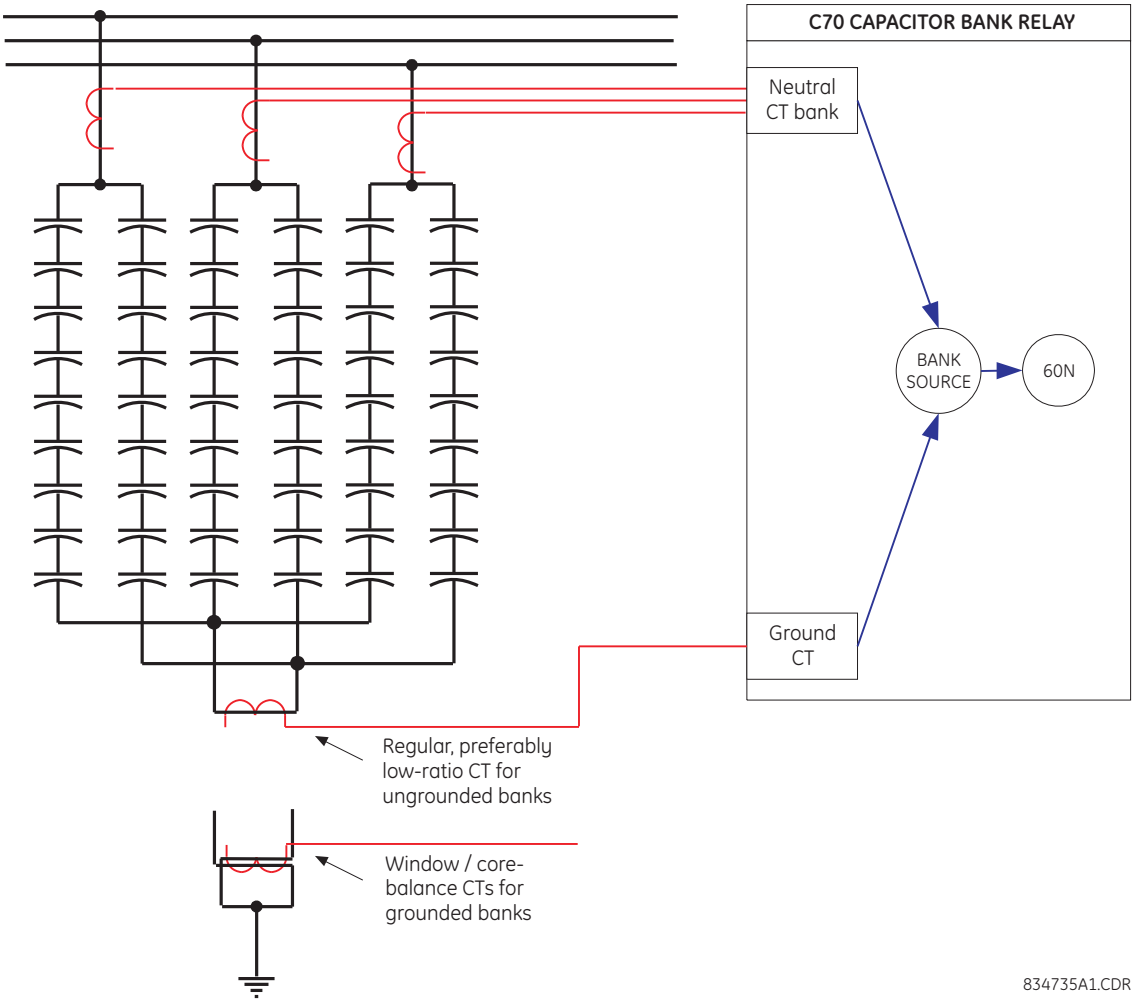

The following settings are available. They are for the neutral current unbalance 1 element. The same descriptions apply to the neutral current unbalance 2 and 3 elements.

NTRL CUR UNBALCE 1 BANK SOURCE — This setting indicates the signal source that signifies the split-phase neutral current in its ground current channel. At minimum the ground channel of this source must be set. If the factor compensating for inherent bank unbalance is set above zero signalling the intent of using the compensation, the phase currents of this source must be configured as well. Without the phase currents configured under this source, the function would run only if the magnitude of the inherent unbalance factor is set to zero.

To improve accuracy, a relatively low-ratio window CT can be used for instrumentation of the split-phase neutral current, and be wired to a 1 A or even sensitive ground relay input for extra sensitivity. CT primary and secondary ratings are entered under a separate menu. Directionality of wiring of the split-phase current is not important for proper functioning of the feature as long as the angle of the factor compensating for the inherent unbalance is set appropriately.

NTRL CUR UNBALCE 1 K MAG — This setting defines magnitude of the factor compensating for the inherent unbalance of the bank. Under balanced conditions, the amount of the spill current measured in the neutral connection between the banks is proportional to the positive-sequence component of the total current of the two banks. This setting defines the magnitude of the proportionality factor. Quality of balancing the bank with a given value of this setting can be viewed under **ACTUAL VALUES** menu. An automatic setting procedure is available via the **COMMANDS** menu to calculate the compensating factor automatically. Setting the compensating factor to zero effectively disables the compensation. If further the slope is set to zero as well, this feature becomes a plain overcurrent element responding to the neutral split-phase current.

NTRL CUR UNBALCE 1 K ANG — This setting defines angle of the factor compensating for the inherent unbalance of the bank. Under balanced conditions, the amount of the spill current measured in the neutral connection between the banks is proportional to the positive-sequence component of the total current of the two banks. This setting defines the angle of the proportionality factor. Quality of balancing the bank with a given value of this setting can be viewed under **ACTUAL VALUES** menu. An automatic setting procedure is available under the **COMMANDS** menu to calculate the compensating factor automatically.

NTRL CUR UNBALCE 1 STG1 PKP to **NTRL CUR UNBALCE 1 STG4 PKP** — These settings specify pickup thresholds for stages 1 through 4 in per-units (pu) of the nominal current of the ground current channel of the bank source. A value of 1 pu is the nominal secondary current, or the nominal primary current, respectively, as configured under the bank source of this function.

NTRL CUR UNBALCE 1 STG1 SLOPE to **NTRL CUR UNBALCE 1 STG4 SLOPE** — These settings specify the slopes for stages 1 through 4. The slope setting is applied if the phase CTs are configured under the bank source. The magnitude of the zero-sequence current is applied as a restraining signal. Typically few percent of slope is enough to ensure security of the function. The factor compensating for the inherent bank unbalance zeroes out the operating signal under relatively balanced bank currents. If the said currents contain a significant zero sequence component, the quality of compensation is lower, hence the need for the restraint, and this slope setting.

NTRL CUR UNBALCE 1 STG1 DEL to **NTRL CUR UNBALCE 1 STG4 DEL** — This setting specifies the pickup time delay, individually per each stage of alarming/tripping. The timers use a common drop out time delay specified by the next setting.

NTRL CUR UNBALCE 1 DPO DELAY — This setting controls a drop out delay for the operate FlexLogic operands. Individual stages apply individually configurable pickup delays, but use this common drop out delay.

NTRL CUR 1 BLK STG1 to **NTRL CUR 1 BLK STG4** — These settings are used to block the function on a per stage basis when required. At minimum this function shall be blocked when the two banks are not paralleled. Note that when unblocked, the function becomes operational after five cycles of intentional delay. High-set instantaneous protection on energization can be provided by a separate instantaneous overcurrent function.

Figure 5-120: Neutral current unbalance logic

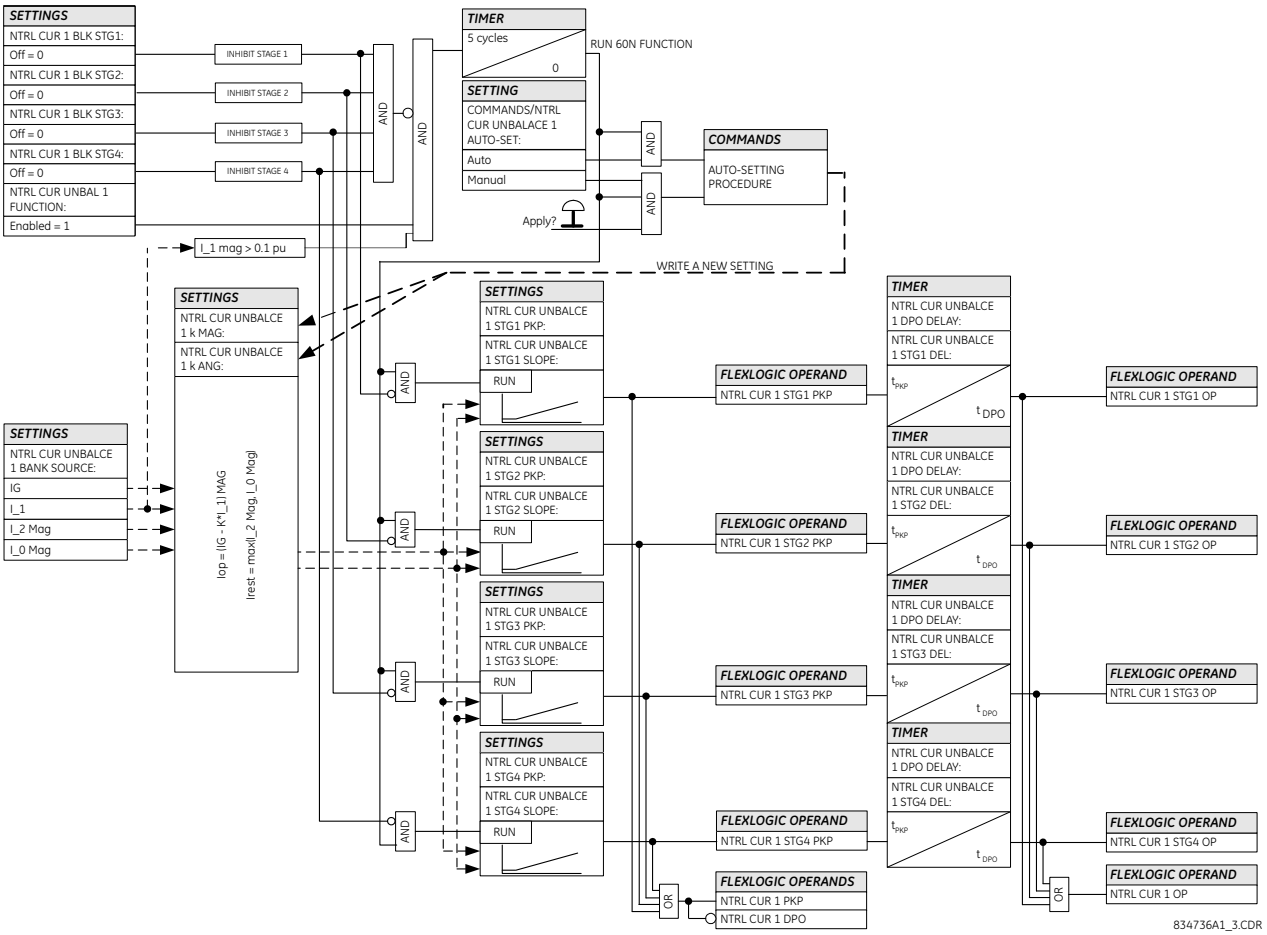

5.8.5 Ground current

5.8.5.1 Menu

SETTINGS ⇨⇩ GROUPED ELEMENTS ⇨ SETTING GROUP 1(6) ⇨⇩ GROUND CURRENT

■ GROUND CURRENT ■	⇔	■ GROUND TOC1 ■	See below
		⇩	
	⇕	■ GROUND TOC6 ■	
	⇕	■ GROUND IOC1 ■	See page 5-250
		⇩	
	⇧	■ GROUND IOC12 ■	

5.8.5.2 Ground time overcurrent (ANSI 51G, IEC PTOC)

SETTINGS ⇨⇩ GROUPED ELEMENTS ⇨ SETTING GROUP 1(6) ⇨⇩ GROUND CURRENT ⇨ GROUND TOC1(6)

■ GROUND TOC1 ■	⇔	GROUND TOC1 FUNCTION: Disabled	Range: Disabled, Enabled
	⇩	GROUND TOC1 SIGNAL SOURCE: SRC 1	Range: SRC 1, SRC 2, SRC 3, SRC 4, SRC 5, SRC 6
	⇩	GROUND TOC1 INPUT: Phasor	Range: Phasor, RMS
	⇩	GROUND TOC1 PICKUP: 1.000 pu	Range: 0.020 to 30.000 pu in steps of 0.001
	⇩	GROUND TOC1 CURVE: IEEE Mod Inv	Range: see the Overcurrent Curve Types table
	⇩	GROUND TOC1 TD MULTIPLIER: 1.00	Range: 0.00 to 600.00 in steps of 0.01
	⇩	GROUND TOC1 RESET: Instantaneous	Range: Instantaneous, Timed
	⇩	GROUND TOC1 BLOCK: Off	Range: FlexLogic operand
	⇩	GROUND TOC1 TARGET: Self-reset	Range: Self-reset, Latched, Disabled
	⇧	GROUND TOC1 EVENTS: Disabled	Range: Disabled, Enabled

This element can provide a required time-delay operating characteristic versus the applied current or be used as a simple definite time element. The ground current input value is the quantity measured by the ground input CT and is the fundamental phasor or RMS magnitude. Two methods of resetting operation are available: "Timed" and "Instantaneous" (see the Inverse TOC Curve Characteristics section for details). When the element is blocked, the time accumulator resets according to the reset characteristic. For example, if the element reset characteristic is set to "Instantaneous" and the element is blocked, the time accumulator clears immediately.

GROUND TOC1 FUNCTION — This setting enables and disables the ground time overcurrent protection element.

GROUND TOC1 SIGNAL SOURCE — This setting selects the signal source for the ground time overcurrent protection element.

GROUND TOC1 INPUT — This setting selects how ground current input quantities are interpreted by the C70. Inputs can be selected as fundamental phasor magnitudes or total waveform RMS magnitudes as required by the application.

GROUND TOC1 PICKUP — This setting specifies the ground time overcurrent pickup level in per-unit values.

GROUND TOC1 CURVE — This setting selects the inverse time overcurrent curve style.

GROUND TOC1 TD MULTIPLIER — This setting specifies a multiple of the base curve shape specified by the **CURVE** setting. Programming this value to zero results in an instantaneous response to all current levels above pickup.

GROUND TOC1 RESET — The "Instantaneous" reset method is intended for applications with other relays, such as most static relays, which set the energy capacity directly to zero when the current falls below the reset threshold. The "Timed" reset method can be used where the relay must coordinate with electromechanical relays.

GROUND TOC1 BLOCK — Assertion of the operand assigned to this setting blocks operation of the ground time overcurrent element.

GROUND TOC1 EVENTS — This setting enables and disables the logging of ground time overcurrent events in the sequence of events recorder.

NOTE

These elements measure the current that is connected to the ground channel of a CT/VT module. The conversion range of a standard channel is from 0.02 to 46 times the CT rating.

Figure 5-121: Ground TOC1 logic

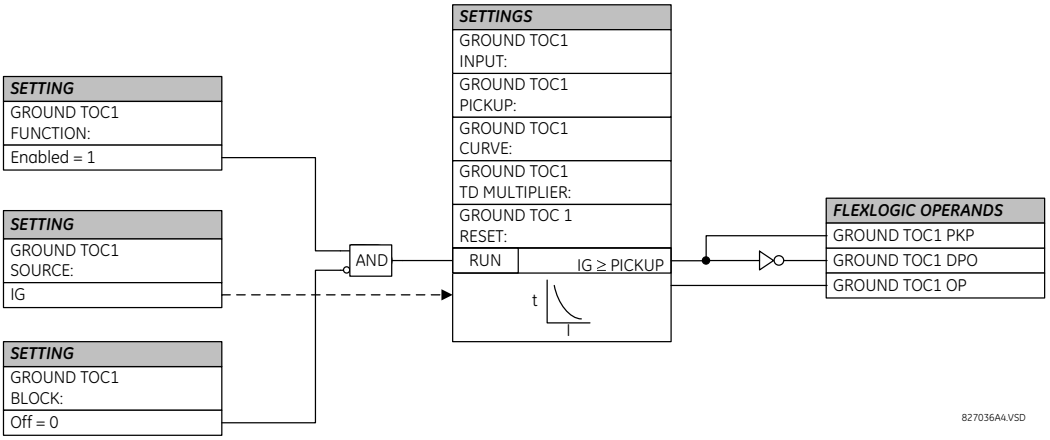

5.8.5.3 Ground instantaneous overcurrent (ANSI 50G, IEC PIOC)

SETTINGS ⇨⇩ GROUPED ELEMENTS ⇨ SETTING GROUP 1(6) ⇨⇩ GROUND CURRENT ⇨⇩ GROUND IOC1(12)

■ GROUND IOC1 ■	⇔	GROUND IOC 1 FUNCTION: Disabled	Range: Disabled, Enabled
	⇩	GROUND IOC 1 SIGNAL SOURCE: SRC 1	Range: SRC 1, SRC 2, SRC 3, SRC 4, SRC 5, SRC 6
	⇩	GROUND IOC 1 PICKUP: 1.000 pu	Range: 0.020 to 30.000 pu in steps of 0.001
	⇩	GROUND IOC 1 PICKUP DELAY: 0.00 s	Range: 0.00 to 600.00 s in steps of 0.01
	⇩	GROUND IOC 1 RESET DELAY: 0.00 s	Range: 0.00 to 600.00 s in steps of 0.01
	⇩	GROUND IOC 1 BLOCK: Off	Range: FlexLogic operand
	⇩	GROUND IOC 1 TARGET: Self-reset	Range: Self-reset, Latched, Disabled
	⇧	GROUND IOC 1 EVENTS: Disabled	Range: Disabled, Enabled

The ground instantaneous overcurrent element can be used as an instantaneous element with no intentional delay or as a definite time element. The ground current input is the quantity measured by the ground input CT and is the fundamental phasor magnitude.

NOTE

These elements measure the current that is connected to the ground channel of a CT/VT module. The conversion range of a standard channel is from 0.02 to 46 times the CT rating.

Figure 5-122: Ground IOC1 logic

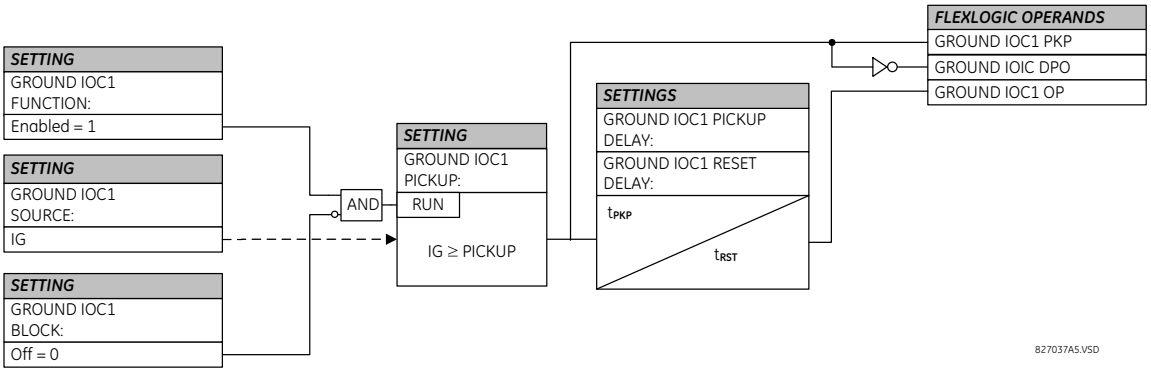

5.8.6 Negative sequence current

5.8.6.1 Menu

SETTINGS ⇨⇩ GROUPED ELEMENTS ⇨ SETTING GROUP 1(6) ⇨⇩ NEGATIVE SEQUENCE CURRENT

■ NEGATIVE SEQUENCE ■ CURRENT	⇔	■ NEG SEQ TOC1 ■	See below
	⇩	■ NEG SEQ TOC2 ■	
	⇩	■ NEG SEQ IOC1 ■	See page 5-252
	⇩	■ NEG SEQ IOC2 ■	
	⇩	■ NEG SEQ DIR OC1 ■	See page 5-253
	⇩	■ NEG SEQ DIR OC2 ■	

5.8.6.2 Negative sequence time overcurrent (ANSI 51Q, IEC PTOC)

SETTINGS ⇨⇩ GROUPED ELEMENTS ⇨ SETTING GROUP 1(6) ⇨⇩ NEGATIVE SEQUENCE CURRENT ⇨ NEG SEQ TOC1(2)

■ NEG SEQ TOC1 ■	⇔	NEG SEQ TOC1 FUNCTION: Disabled	Range: Disabled, Enabled
	⇩	NEG SEQ TOC1 SIGNAL SOURCE: SRC 1	Range: SRC 1, SRC 2, SRC 3, SRC 4, SRC 5, SRC 6
	⇩	NEG SEQ TOC1 PICKUP: 1.000 pu	Range: 0.020 to 30.000 pu in steps of 0.001
	⇩	NEG SEQ TOC1 CURVE: IEEE Mod Inv	Range: see Overcurrent Curve Types table
	⇩	NEG SEQ TOC1 TD MULTIPLIER: 1.00	Range: 0.00 to 600.00 in steps of 0.01
	⇩	NEG SEQ TOC1 RESET: Instantaneous	Range: Instantaneous, Timed
	⇩	NEG SEQ TOC1 BLOCK: Off	Range: FlexLogic operand

⇕	**NEG SEQ TOC1 TARGET: Self-reset**	Range: Self-reset, Latched, Disabled
⇧	**NEG SEQ TOC1 EVENTS: Disabled**	Range: Disabled, Enabled

The negative-sequence time overcurrent element can be used to determine and clear unbalance in the system. The input for calculating negative-sequence current is the fundamental phasor value.

Two methods of resetting operation are available; "Timed" and "Instantaneous" (see the Inverse TOC Curve Characteristics section earlier for details on curve setup, trip times and reset operation). When the element is blocked, the time accumulator resets according to the reset characteristic. For example, if the element reset characteristic is set to "Instantaneous" and the element is blocked, the time accumulator clears immediately.

Figure 5-123: Negative sequence TOC1 logic

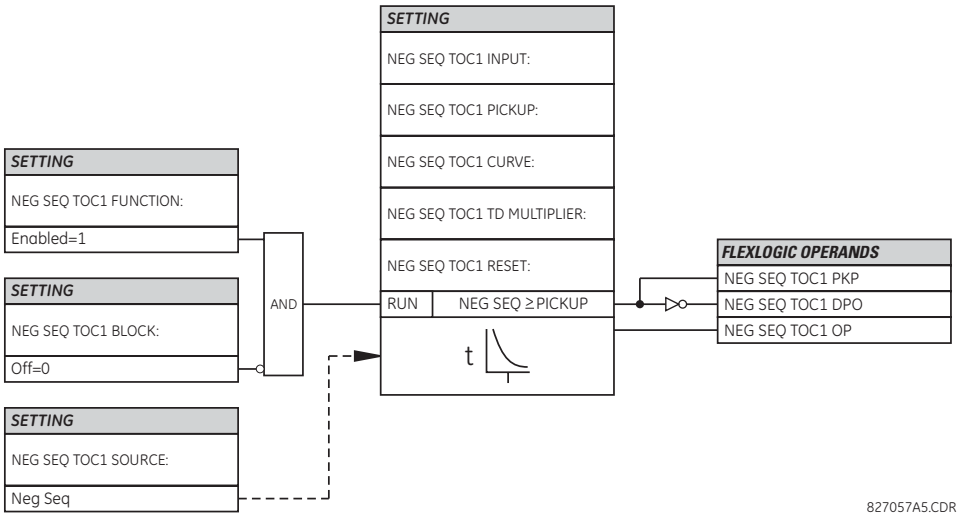

5.8.6.3 Negative sequence instantaneous overcurrent (ANSI 50Q, IEC PIOC)

SETTINGS ⇨⇩ GROUPED ELEMENTS ⇨ SETTING GROUP 1(6) ⇨⇩ NEGATIVE SEQUENCE CURRENT ⇨⇩ NEG SEQ OC1(2)

■ **NEG SEQ IOC1** ■	⇔	**NEG SEQ IOC1 FUNCTION: Disabled**	Range: Disabled, Enabled
	⇕	**NEG SEQ IOC1 SIGNAL SOURCE: SRC 1**	Range: SRC 1, SRC 2, SRC 3, SRC 4, SRC 5, SRC 6
	⇕	**NEG SEQ IOC1 PICKUP: 1.000 pu**	Range: 0.020 to 30.000 pu in steps of 0.001
	⇕	**NEG SEQ IOC1 PICKUP DELAY: 0.00 s**	Range: 0.00 to 600.00 s in steps of 0.01
	⇕	**NEG SEQ IOC1 RESET DELAY: 0.00 s**	Range: 0.00 to 600.00 s in steps of 0.01
	⇕	**NEG SEQ IOC1 BLOCK: Off**	Range: FlexLogic operand
	⇕	**NEG SEQ IOC1 TARGET: Self-reset**	Range: Self-reset, Latched, Disabled
	⇧	**NEG SEQ IOC1 EVENTS: Disabled**	Range: Disabled, Enabled

The negative-sequence instantaneous overcurrent element can be used as an instantaneous function with no intentional delay or as a definite time function. The element responds to the negative-sequence current fundamental frequency phasor magnitude (calculated from the phase currents) and applies a positive-sequence restraint for better performance: a small portion (12.5%) of the positive-sequence current magnitude is subtracted from the negative-sequence current magnitude when forming the operating quantity.

$$I_{op} = |I_2| - K \times |I_1| \text{ where } K = 1/8 \qquad \textbf{Eq. 5-18}$$

The positive-sequence restraint allows for more sensitive settings by counterbalancing spurious negative-sequence currents resulting from

- System unbalances under heavy load conditions
- Transformation errors of current transformers (CTs) during three-phase faults
- Fault inception and switch-off transients during three-phase faults

The positive-sequence restraint must be considered when testing for pickup accuracy and response time (multiple of pickup). The operating quantity depends on how the test currents are injected into the relay (single-phase injection: $I_{op} = 0.2917 \times I_{injected}$; three-phase injection, opposite rotation: $I_{op} = I_{injected}$).

Figure 5-124: Negative sequence IOC1 logic

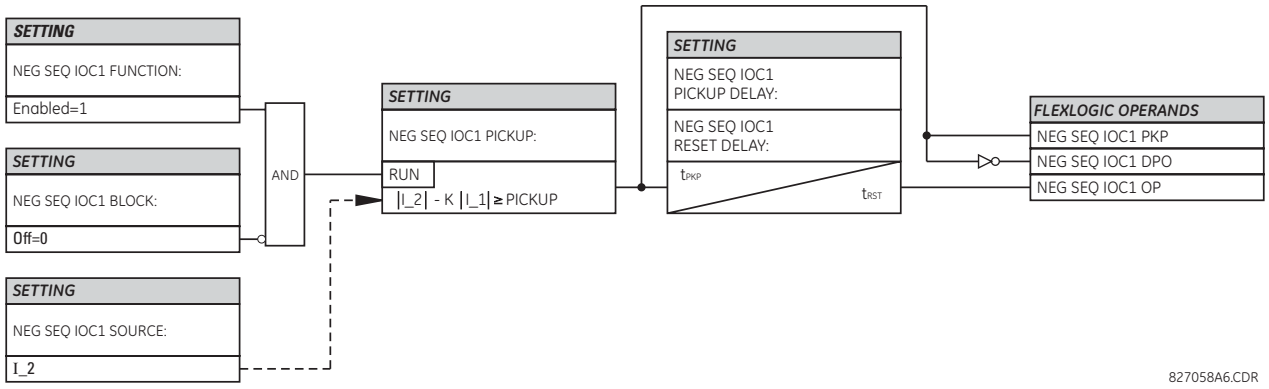

5.8.6.4 Negative sequence directional overcurrent (ANSI 67Q, IEC PDEF/PTOC)

SETTINGS ⇨⇩ GROUPED ELEMENTS ⇨ SETTING GROUP 1(6) ⇨⇩ NEGATIVE SEQUENCE CURRENT ⇨⇩ NEG SEQ DIR OC1(2)

■ **NEG SEQ DIR OC1** ■	⇔	**NEG SEQ DIR OC1 FUNCTION: Disabled**	Range: Disabled, Enabled
	⇩	**NEG SEQ DIR OC1 SOURCE: SRC 1**	Range: SRC 1, SRC 2, SRC 3, SRC 4, SRC 5, SRC 6
	⇩	**NEG SEQ DIR OC1 OFFSET: 0.00 Ω**	Range: 0.00 to 250.00 ohms in steps of 0.01
	⇩	**NEG SEQ DIR OC1 TYPE: Neg Sequence**	Range: Neg Sequence, Zero Sequence
	⇩	**NEG SEQ DIR OC1 POS-SEQ RESTRAINT: 0.063**	Range: 0.000 to 0.500 in steps of 0.001
	⇩	**NEG SEQ DIR OC1 FWD ECA: 75° Lag**	Range: 0 to 90° Lag in steps of 1
	⇩	**NEG SEQ DIR OC1 FWD LIMIT ANGLE: 90°**	Range: 40 to 90° in steps of 1
	⇩	**NEG SEQ DIR OC1 FWD PICKUP: 0.050 pu**	Range: 0.015 to 30.000 pu in steps of 0.005

⇕	**NEG SEQ DIR OC1 REV LIMIT ANGLE: 90°**	Range: 40 to 90° in steps of 1
⇕	**NEG SEQ DIR OC1 REV PICKUP: 0.050 pu**	Range: 0.015 to 30.000 pu in steps of 0.005
⇕	**NEG SEQ DIR OC1 BLK: Off**	Range: FlexLogic operand
⇕	**NEG SEQ DIR OC1 TARGET: Self-reset**	Range: Self-reset, Latched, Disabled
⇧	**NEG SEQ DIR OC1 EVENTS: Disabled**	Range: Disabled, Enabled

There are two negative-sequence directional overcurrent protection elements available. The element provides both forward and reverse fault direction indications through its output operands NEG SEQ DIR OC1 FWD and NEG SEQ DIR OC1 REV, respectively. The output operand is asserted if the magnitude of the operating current is above a pickup level (overcurrent unit) and the fault direction is seen as forward or reverse, respectively (directional unit).

The overcurrent unit of the element essentially responds to the magnitude of a fundamental frequency phasor of either the negative-sequence or neutral current as per user selection.

A positive-sequence restraint is applied for better performance: a small user-programmable portion of the positive-sequence current magnitude is subtracted from the negative or zero-sequence current magnitude, respectively, when forming the element operating quantity.

$$I_{op} = |I_2| - K \times |I_1| \quad \text{or} \quad I_{op} = 3 \times (|I_0| - K \times |I_1|) \qquad \textbf{Eq. 5-19}$$

5

The positive-sequence restraint allows for more sensitive settings by counterbalancing spurious negative-sequence and zero-sequence currents resulting from

- System unbalances under heavy load conditions
- Transformation errors of current transformers (CTs)
- Fault inception and switch-off transients

The positive-sequence restraint must be considered when testing for pickup accuracy and response time (multiple of pickup). The positive-sequence restraint is removed for low currents. If the positive-sequence current is less than 0.8 pu, then the restraint is removed by changing the constant K to zero. This results in better response to high-resistance faults when the unbalance is very small and there is no danger of excessive CT errors, since the current is low.

The operating quantity depends on the way the test currents are injected into the C70. For single phase injection

- $I_{op} = ⅓ \times (1 - K) \times I_{injected}$ for I_2 mode
- $I_{op} = (1 - K) \times I_{injected}$ for I_0 mode if I_1 > 0.8 pu

The directional unit uses the negative-sequence current (I_2) and negative-sequence voltage (V_2).

The following tables define the negative-sequence directional overcurrent element.

Table 5-37: Negative-sequence directional overcurrent unit

Mode	Operating current
Negative-sequence	$I_{op} = \|I_2\| - K \times I_1\|$
Zero-sequence	$I_{op} = 3 \times (\|I_0\| - K \times \|I_1\|)$ if $\|I_1\| > 0.8$ pu $I_{op} = 3 \times \|I_0\|$ if $\|I_1\| \le 0.8$ pu

Table 5-38: Negative-sequence directional unit

Direction	Compared phasors	
Forward	–V_2 + Z_offset × I_2	I_2 × 1∠ECA
Reverse	–V_2 + Z_offset × I_2	–(I_2 × 1∠ECA)

Z_offset is the offset impedance, for which magnitude is the OFFSET setting and angle is the FWD ECA.

The negative-sequence voltage must be greater than 0.02 pu to be validated for use as a polarizing signal. Additionally, when offset impedance is applied and negative-sequence current is above 0.2 pu, compensated negative-sequence voltage -V_2 + Z_offset x I_2 has to be above 0.02 pu in order to discriminate fault direction; otherwise when negative-sequence current is less than 0.2 pu, -V_2 is then used as the polarizing signal. If the polarizing signal is not validated, neither forward nor reverse indication is given. The following figure explains the usage of the voltage polarized directional unit of the element. It shows the phase angle comparator characteristics for a phase A to ground fault, with settings of

ECA = 75° (element characteristic angle = centerline of operating characteristic)
FWD LA = 80° (forward limit angle = ± the angular limit with the ECA for operation)
REV LA = 80° (reverse limit angle = ± the angular limit with the ECA for operation)

The element incorporates a current reversal logic: if the reverse direction is indicated for at least 1.25 of a power system cycle, the prospective forward indication is delayed by 1.5 of a power system cycle. The element emulates an electromechanical directional device. Larger operating and polarizing signals result in faster directional discrimination, bringing more security to the element operation.

Figure 5-125: Negative-sequence directional characteristic

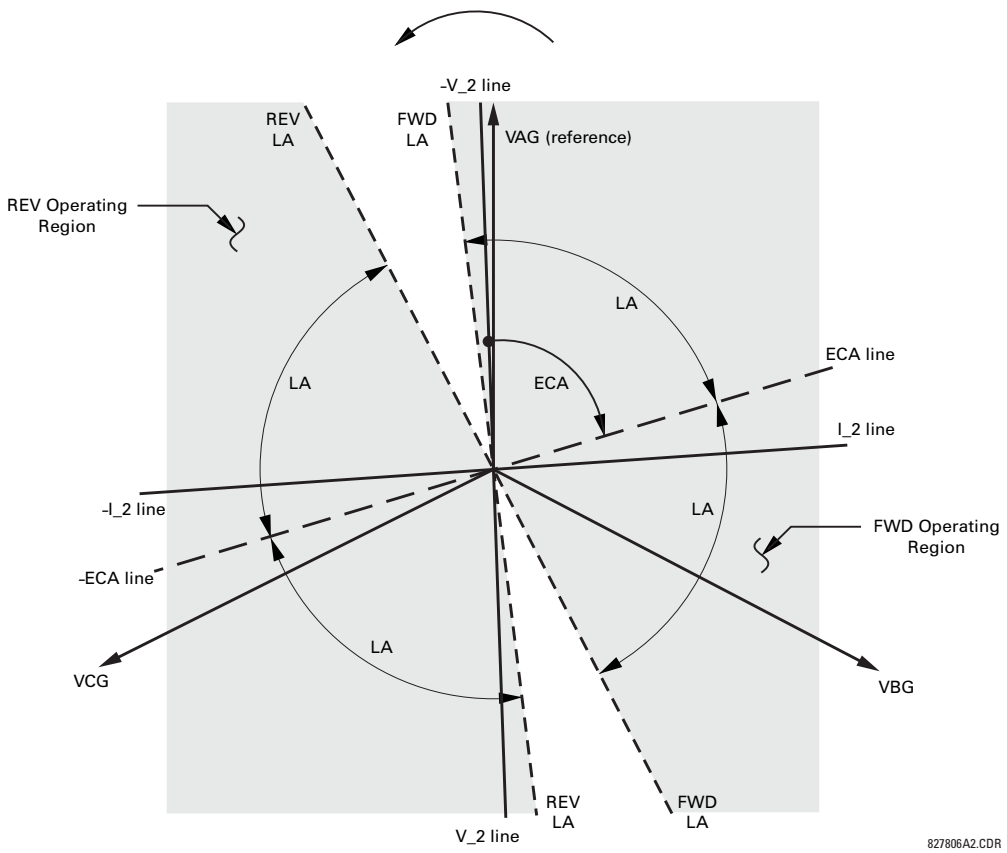

The forward-looking function is designed to be more secure compared to the reverse-looking function, so use the forward-looking function for the tripping direction. The reverse-looking function is faster compared to the forward-looking function, so use the reverse-looking function for the blocking direction. This allows for better protection coordination. Take this bias into account when using the negative-sequence directional overcurrent element to directionalize other protection elements. The negative-sequence current must be greater than the **PRODUCT SETUP** ⇨⇩ **DISPLAY PROPERTIES** ⇨⇩ **CURRENT CUT-OFF LEVEL** setting value.

Settings

NEG SEQ DIR OC1 OFFSET — Specifies the offset impedance used by this protection. The primary application for the offset impedance is to guarantee correct identification of fault direction on series compensated lines (see the Application of Settings chapter for information on how to calculate this setting). In regular applications, the offset impedance ensures

proper operation even if the negative-sequence voltage at the relaying point is very small. If this is the intent, the offset impedance shall not be larger than the negative-sequence impedance of the protected circuit. Practically, it is several times smaller. Enter the offset impedance in secondary ohms.

NEG SEQ DIR OC1 TYPE — Selects the operating mode for the overcurrent unit of the element. The choices are "Neg Sequence" and "Zero Sequence." In some applications it is advantageous to use a directional negative-sequence overcurrent function instead of a directional zero-sequence overcurrent function as inter-circuit mutual effects are minimized.

NEG SEQ DIR OC1 POS-SEQ RESTRAINT — Controls the positive-sequence restraint. Set it to 0.063 (in "Zero Sequence" mode) or 0.125 (in "Neg Sequence" mode) for backward compatibility with revisions 3.40 and earlier. Set it to zero to remove the restraint. Set it higher if large system unbalances or poor CT performance are expected.

NEG SEQ DIR OC1 FWD ECA — Select the element characteristic angle (ECA) for the forward direction. The element characteristic angle in the reverse direction is the angle set for the forward direction shifted by 180°.

NEG SEQ DIR OC1 FWD LIMIT ANGLE — Defines a symmetrical limit angle (in both directions from the ECA) for the forward direction.

NEG SEQ DIR OC1 FWD PICKUP — Defines the pickup level for the overcurrent unit in the forward direction. This pickup threshold applies to zero-sequence or negative-sequence current based on the **NEG SEQ DIR OC1 TYPE** setting. When specifying this setting, keep in mind that the design uses a positive-sequence restraint technique.

NEG SEQ DIR OC1 REV LIMIT ANGLE — Defines a symmetrical limit angle (in both directions from the ECA) for the reverse direction.

NEG SEQ DIR OC1 REV PICKUP — Defines the pickup level for the overcurrent unit in the reverse direction. This pickup threshold applies to zero-sequence or negative-sequence current based on the **NEG SEQ DIR OC1 TYPE** setting. When selecting this setting, keep in mind that the design uses a positive-sequence restraint technique.

5

Figure 5-126: Negative-sequence directional OC1 logic

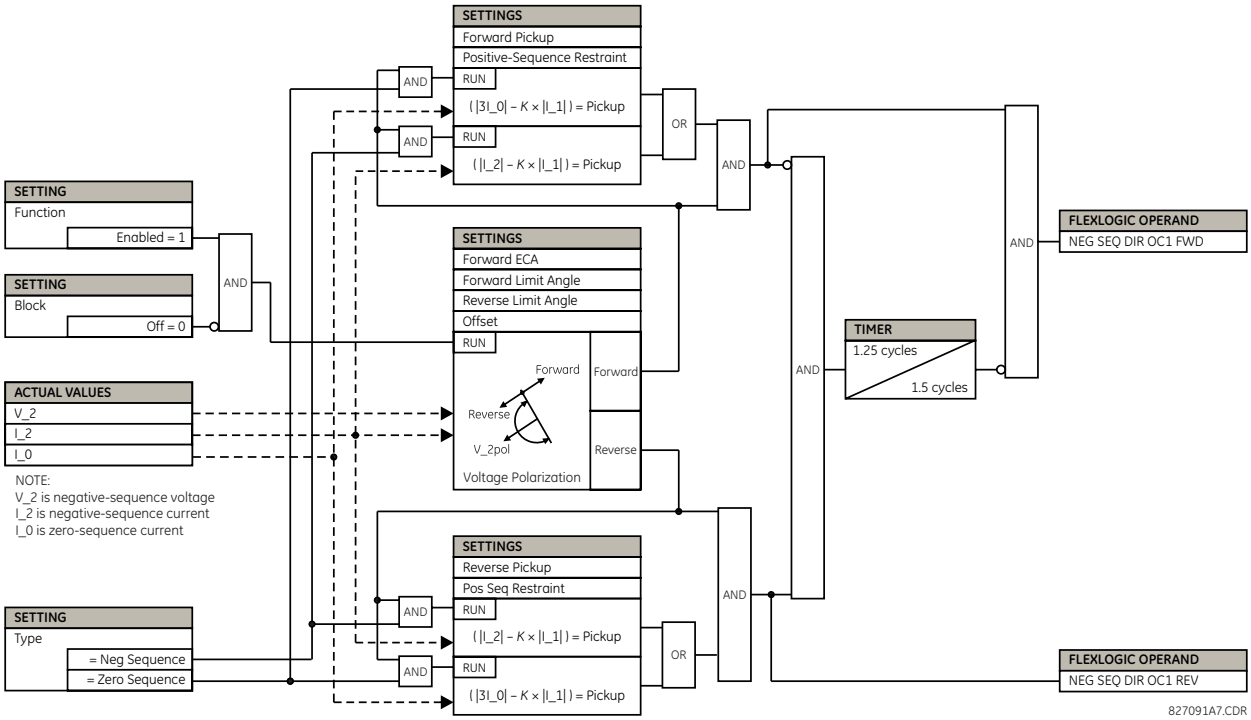

5.8.7 Breaker failure (ANSI 50BF)

SETTINGS ⇨⇩ GROUPED ELEMENTS ⇨ SETTING GROUP 1(6) ⇨ BREAKER FAILURE ⇨ BREAKER FAILURE 1(3)

■ BREAKER FAILURE 1 ■	⇔	BF 1 FUNCTION: Disabled	Range: Disabled, Enabled
	⇩	BF 1 MODE: 3-Pole	Range: 3-Pole, 1-Pole
	⇩	BF 1 SOURCE: SRC 1	Range: SRC 1, SRC 2, SRC 3, SRC 4, SRC 5, SRC 6
	⇩	BF 1 USE AMP SUPV: Yes	Range: Yes, No
	⇩	BF 1 USE SEAL-IN: Yes	Range: Yes, No
	⇩	BF 1 3-POLE INITIATE: Off	Range: FlexLogic operand
	⇩	BF 1 BLOCK: Off	Range: FlexLogic operand
	⇩	BF 1 RETRIP PICKUP DELAY: 0.033 s	Range: 0.000 to 65.535 s in steps of 0.001
	⇩	BF 1 PH AMP SUPV PICKUP: 1.050 pu	Range: 0.020 to 30.000 pu in steps of 0.001
	⇩	BF 1 N AMP SUPV PICKUP: 1.050 pu	Range: 0.020 to 30.000 pu in steps of 0.001
	⇩	BF 1 USE TIMER 1: Yes	Range: Yes, No
	⇩	BF 1 TIMER 1 PICKUP DELAY: 0.000 s	Range: 0.000 to 65.535 s in steps of 0.001
	⇩	BF 1 USE TIMER 2: Yes	Range: Yes, No
	⇩	BF 1 TIMER 2 PICKUP DELAY: 0.000 s	Range: 0.000 to 65.535 s in steps of 0.001
	⇩	BF 1 USE TIMER 3: Yes	Range: Yes, No
	⇩	BF 1 TIMER 3 PICKUP DELAY: 0.000 s	Range: 0.000 to 65.535 s in steps of 0.001
	⇩	BF 1 BKR POS1 ϕA/3P: Off	Range: FlexLogic operand
	⇩	BF 1 BKR POS2 ϕA/3P: Off	Range: FlexLogic operand
	⇩	BF 1 BKR TEST ON: Off	Range: FlexLogic operand
	⇩	BF 1 PH AMP HISET PICKUP: 1.050 pu	Range: 0.020 to 30.000 pu in steps of 0.001
	⇩	BF 1 N AMP HISET PICKUP: 1.050 pu	Range: 0.020 to 30.000 pu in steps of 0.001
	⇩	BF 1 PH AMP LOSET PICKUP: 1.050 pu	Range: 0.020 to 30.000 pu in steps of 0.001
	⇩	BF 1 N AMP LOSET PICKUP: 1.050 pu	Range: 0.020 to 30.000 pu in steps of 0.001

⇕	**BF 1 LOSET TIME DELAY: 0.000 s**	Range: 0.000 to 65.535 s in steps of 0.001
⇕	**BF 1 TRIP DROPOUT DELAY: 0.000 s**	Range: 0.000 to 65.535 s in steps of 0.001
⇕	**BF 1 TARGET: Self-reset**	Range: Self-reset, Latched, Disabled
⇕	**BF 1 EVENTS: Disabled**	Range: Disabled, Enabled
⇕	**BF 1 PH A INITIATE: Off**	Range: FlexLogic operand Valid only for 1-Pole breaker failure schemes
⇕	**BF 1 PH B INITIATE: Off**	Range: FlexLogic operand Valid only for 1-Pole breaker failure schemes
⇕	**BF 1 PH C INITIATE: Off**	Range: FlexLogic operand Valid only for 1-Pole breaker failure schemes
⇕	**BF 1 BKR POS1 ϕB: Off**	Range: FlexLogic operand Valid only for 1-Pole breaker failure schemes
⇕	**BF 1 BKR POS1 ϕC: Off**	Range: FlexLogic operand Valid only for 1-Pole breaker failure schemes
⇕	**BF 1 BKR POS2 ϕB: Off**	Range: FlexLogic operand Valid only for 1-Pole breaker failure schemes
⇑	**BF 1 BKR POS2 ϕC: Off**	Range: FlexLogic operand Valid only for 1-Pole breaker failure schemes

5

A breaker failure scheme determines that a breaker signaled to trip has not cleared a fault within a definite time, so further tripping action must be performed. Tripping from the breaker failure scheme trips all breakers, both local and remote, that can supply current to the faulted zone. Usually operation of a breaker failure element causes clearing of a larger section of the power system than the initial trip. Because breaker failure can result in tripping a large number of breakers and this affects system safety and stability, a very high level of security is required.

Two schemes are provided: one for three-pole tripping only (identified by the name "3BF") and one for three pole plus single-pole operation (identified by the name "1BF"). The philosophy used in these schemes is identical. The operation of a breaker failure element includes three stages: initiation, determination of a breaker failure condition, and output.

5.8.7.1 Stage 1: Initiation

A FlexLogic operand representing the protection trip signal initially sent to the breaker must be selected to initiate the scheme. The initiating signal is sealed-in if primary fault detection can reset before the breaker failure timers have finished timing. The seal-in is supervised by current level, so it is reset when the fault is cleared. If desired, an incomplete sequence seal-in reset can be implemented by using the initiating operand to also initiate a FlexLogic timer, set longer than any breaker failure timer, whose output operand is selected to block the breaker failure scheme.

Schemes can be initiated either directly or with current level supervision. It is particularly important in any application to decide if a current-supervised initiate is to be used. The use of a current-supervised initiate results in the breaker failure element not being initiated for a breaker that has very little or no current flowing through it, which can be the case for transformer faults. For those situations where it is required to maintain breaker fail coverage for fault levels below the **BF 1 PH AMP SUPV PICKUP** or the **BF 1 N AMP SUPV PICKUP** setting, do not use a current supervised initiate. Utilize this feature for those situations where coordinating margins can be reduced when high speed reclosing is used. Thus, if this choice is made, fault levels must always be above the supervision pickup levels for dependable operation of the breaker fail scheme. This can also occur in breaker-and-a-half or ring bus configurations where the first breaker closes into a fault; the protection trips and attempts to initiate breaker failure for the second breaker, which is in the process of closing, but does not yet have current flowing through it.

When the scheme is initiated, it sends a trip signal after a pickup delay to the breaker initially signaled to trip (this feature is usually described as re-trip). This reduces the possibility of widespread tripping that results from a declaration of a failed breaker.

5.8.7.2 Stage 2: Determination of a breaker failure condition

The schemes determine a breaker failure condition via three paths. Each of these paths is equipped with a time delay, after which a failed breaker is declared and trip signals are sent to all breakers required to clear the zone. The delayed paths are associated with breaker failure timers 1, 2, and 3, which are intended to have delays increasing with increasing timer numbers. These delayed paths are individually enabled to allow for maximum flexibility.

Timer 1 logic (early path) is supervised by a fast-operating breaker auxiliary contact. If the breaker is still closed (as indicated by the auxiliary contact) and fault current is detected after the delay interval, an output is issued. Operation of the breaker auxiliary switch indicates mechanical operation of the breaker. The continued presence of current indicates that the breaker has failed to interrupt the circuit.

Timer 2 logic (main path) is not supervised by a breaker auxiliary contact. If fault current is detected after the delay interval, an output is issued. This path is intended to detect a breaker that opens mechanically but fails to interrupt fault current; the logic therefore does not use a breaker auxiliary contact.

The timer 1 and 2 paths provide two levels of current supervision, high-set and low-set, that allow the supervision level to change from a current that flows before a breaker inserts an opening resistor into the faulted circuit to a lower level after resistor insertion. The high-set detector is enabled after timeout of timer 1 or 2, along with a timer that enables the low-set detector after its delay interval. The delay interval between high-set and low-set is the expected breaker opening time. Both current detectors provide a fast operating time for currents at small multiples of the pickup value. The overcurrent detectors are required to operate after the breaker failure delay interval in case current still flows through the breaker, and they are supervised by a fast reset element described as follows.

Timer 3 logic (slow path) is supervised by a breaker auxiliary contact and a control switch contact used to indicate that the breaker is in or out-of-service, disabling this path when the breaker is out-of-service for maintenance. There is no current level check in this logic as it is intended to detect low magnitude faults and it is therefore the slowest to operate.

5.8.7.3 Stage 3: Output

The outputs from the schemes are:

- FlexLogic operands that report on the operation of portions of the scheme
- FlexLogic operand used to re-trip the protected breaker
- FlexLogic operands that initiate tripping required to clear the faulted zone. The trip output can be sealed-in for an adjustable period.
- Target message indicating a failed breaker has been declared
- Illumination of the front panel Trip LED (and the Phase A, B, or C LED, if applicable)

5.8.7.4 Main path sequence

Figure 5-127: Breaker failure main path sequence

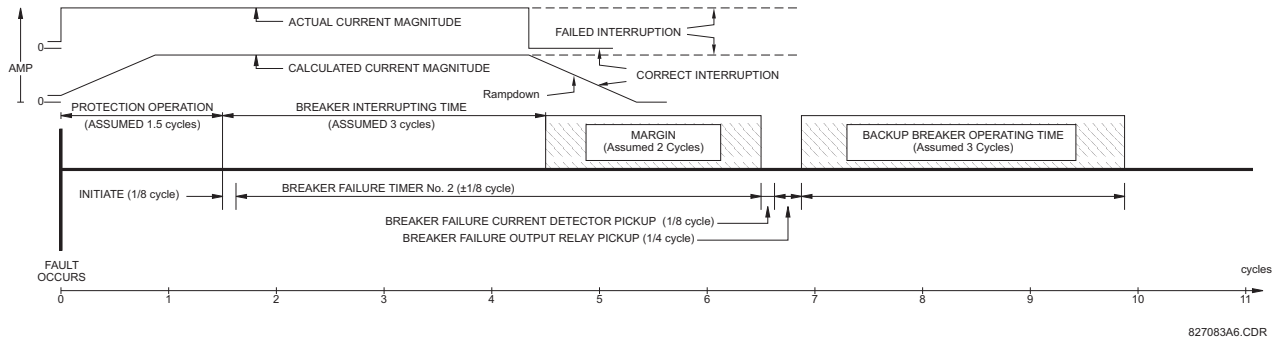

The current supervision elements reset in less than 0.7 of a power cycle for any multiple of pickup current as shown in the following figure.

Figure 5-128: Breaker failure overcurrent supervision reset time

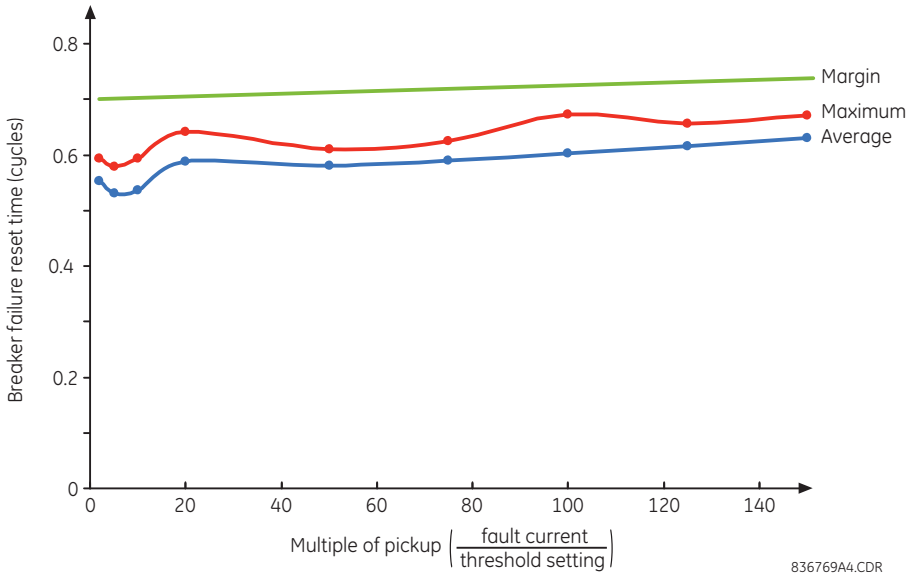

5.8.7.5 Settings

BF 1 MODE — This setting is used to select the breaker failure operating mode: single or three pole.

BF 1 USE AMP SUPV — If set to "Yes," the element is initiated if current flowing through the breaker is above the supervision pickup level.

BF 1 USE SEAL-IN — If set to "Yes," the element is sealed-in if current flowing through the breaker is above the supervision pickup level.

BF 1 3-POLE INITIATE — This setting selects the FlexLogic operand that initiates three-pole tripping of the breaker.

BF 1 RETRIP PICKUP DELAY — This setting specifies a pickup delay for the re-trip command. Set this delay longer than the possible spurious contact input activation duration due to transients or temporary DC grounds, taking into account the contact input de-bounce time to avoid re-trip operation for such transients.

BF 1 PH AMP SUPV PICKUP — This setting is used to set the phase current initiation and seal-in supervision level. Generally this setting detects the lowest expected fault current on the protected breaker. It can be set as low as necessary (lower than breaker resistor current or lower than load current)—high-set and low-set current supervision guarantee correct operation.

BF 1 N AMP SUPV PICKUP — This setting is used to set the neutral current initiate and seal-in supervision level. Generally this setting detects the lowest expected fault current on the protected breaker. Neutral current supervision is used only in the three phase scheme to provide increased sensitivity. This setting is valid only for three-pole tripping schemes.

BF 1 USE TIMER 1 — If set to "Yes," the early path is operational.

BF 1 TIMER 1 PICKUP DELAY — Timer 1 is set to the shortest time required for breaker auxiliary contact Status-1 to open, from the time the initial trip signal is applied to the breaker trip circuit, plus a safety margin.

BF 1 USE TIMER 2 — If set to "Yes," the main path is operational.

BF 1 TIMER 2 PICKUP DELAY — Timer 2 is set to the expected opening time of the breaker, plus a safety margin. This safety margin was historically intended to allow for measuring and timing errors in the breaker failure scheme equipment. In microprocessor relays this time is not significant. In C70 relays, which use a Fourier transform, the calculated current magnitude ramps-down to zero one power frequency cycle after the current is interrupted, however this lag does not need to be included in the overall margin duration due to a novel current supervision reset element, as it occurs after current interruption. As shown in the previous figure, this current supervision reset element guarantees breaker failure reset in less than 0.7 power cycles for any subsidence current and irrespective of the magnitude of the fault current.

Note that in bulk oil circuit breakers, the interrupting time for currents less than 25% of the interrupting rating can be significantly longer than the normal interrupting time.

BF 1 USE TIMER 3 — If set to "Yes," the Slow Path is operational.

BF 1 TIMER 3 PICKUP DELAY — Timer 3 is set to the same interval as timer 2, plus an increased safety margin. Because this path is intended to operate only for low level faults, the delay can be in the order of 300 to 500 ms.

BF 1 BKR POS1 ϕA/3P — This setting selects the FlexLogic operand that represents the protected breaker early-type auxiliary switch contact (52/a). When using the single-pole breaker failure scheme, this operand represents the protected breaker early-type auxiliary switch contact on pole A. This is normally a non-multiplied form-A contact. The contact can even be adjusted to have the shortest possible operating time.

BF 1 BKR POS2 ϕA/3P — This setting selects the FlexLogic operand that represents the breaker normal-type auxiliary switch contact (52/a). When using the single-pole breaker failure scheme, this operand represents the protected breaker auxiliary switch contact on pole A. This can be a multiplied contact.

BF 1 BKR TEST ON — This setting is used to select the FlexLogic operand that represents the breaker in-service/out-of-service switch set to the out-of-service position.

BF 1 PH AMP HISET PICKUP — This setting sets the phase current output supervision level. Generally this setting is to detect the lowest expected fault current on the protected breaker, before a breaker opening resistor is inserted.

BF 1 N AMP HISET PICKUP — This setting sets the neutral current output supervision level. Generally this setting is to detect the lowest expected fault current on the protected breaker, before a breaker opening resistor is inserted. Neutral current supervision is used only in the three pole scheme to provide increased sensitivity. This setting is valid only for three-pole breaker failure schemes.

BF 1 PH AMP LOSET PICKUP — This setting sets the phase current output supervision level. Generally this setting is to detect the lowest expected fault current on the protected breaker, after a breaker opening resistor is inserted (approximately 90% of the resistor current).

BF 1 N AMP LOSET PICKUP — This setting sets the neutral current output supervision level. Generally this setting is to detect the lowest expected fault current on the protected breaker, after a breaker opening resistor is inserted (approximately 90% of the resistor current). This setting is valid only for three-pole breaker failure schemes.

BF 1 LOSET TIME DELAY — Sets the pickup delay for current detection after opening resistor insertion.

BF 1 TRIP DROPOUT DELAY — This setting is used to set the period of time for which the trip output is sealed-in. This timer must be coordinated with the automatic reclosing scheme of the failed breaker, to which the breaker failure element sends a cancel reclosure signal. Reclosure of a remote breaker can also be prevented by holding a transfer trip signal on longer than the reclaim time.

BF 1 PH A INITIATE / BF1 PH B INITIATE / BF 1 PH C INITIATE — These settings select the FlexLogic operand to initiate phase A, B, or C single-pole tripping of the breaker and the phase A, B, or C portion of the scheme, accordingly. This setting is only valid for single-pole breaker failure schemes.

BF 1 BKR POS1 ϕB / BF1 BKR POS 1 ϕC — These settings select the FlexLogic operand to represents the protected breaker early-type auxiliary switch contact on poles B or C, accordingly. This contact is normally a non-multiplied Form-A contact. The contact can even be adjusted to have the shortest possible operating time. This setting is valid only for single-pole breaker failure schemes.

BF 1 BKR POS2 ϕB — Selects the FlexLogic operand that represents the protected breaker normal-type auxiliary switch contact on pole B (52/a). This can be a multiplied contact. This setting is valid only for single-pole breaker failure schemes.

BF 1 BKR POS2 ϕC — This setting selects the FlexLogic operand that represents the protected breaker normal-type auxiliary switch contact on pole C (52/a). This can be a multiplied contact. For single-pole operation, the scheme has the same overall general concept except that it provides re-tripping of each single pole of the protected breaker. The approach shown in the following single pole tripping diagram uses the initiating information to determine which pole is supposed to trip. The logic is segregated on a per-pole basis. The overcurrent detectors have ganged settings. This setting is valid only for single-pole breaker failure schemes.

Upon operation of the breaker failure element for a single pole trip command, a three-pole trip command needs to be given via output operand BKR FAIL 1 TRIP OP.

5.8.7.6 Logic

Figure 5-129: Single-pole breaker failure, initiate logic

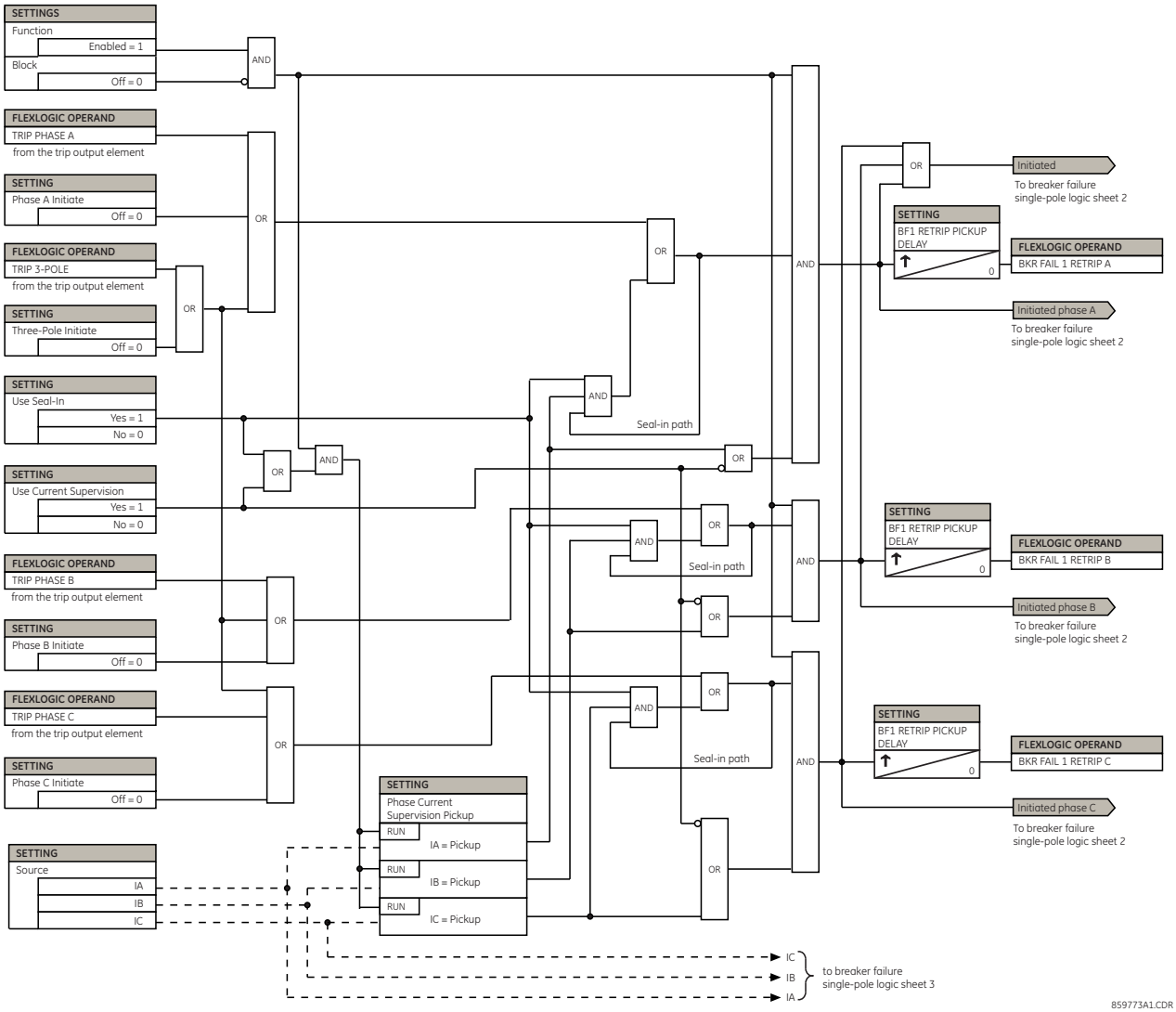

Figure 5-130: Single-pole breaker failure, timers logic

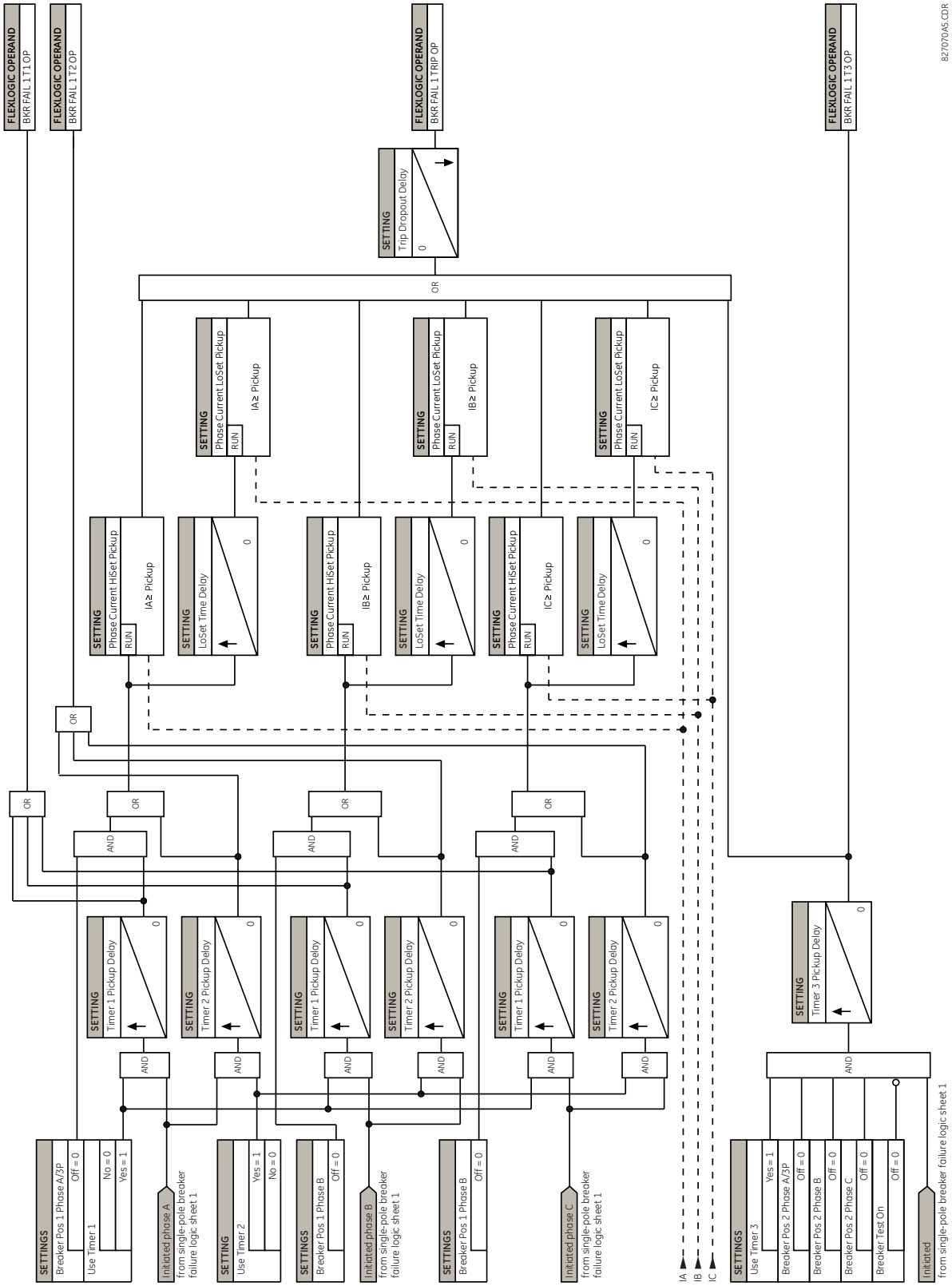

Figure 5-131: Three-pole breaker failure, initiate logic

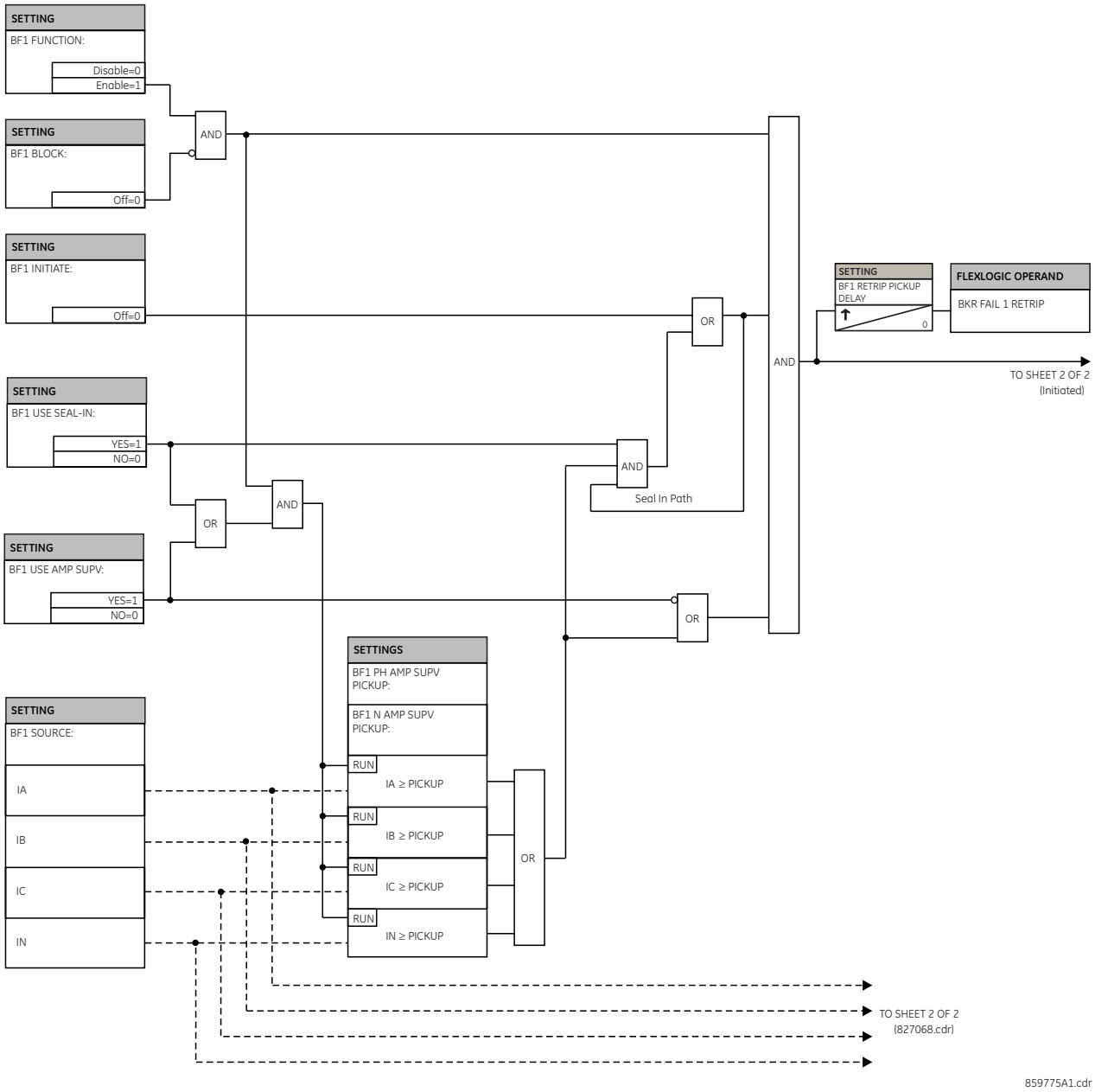

Figure 5-132: Three-pole breaker failure, timers logic

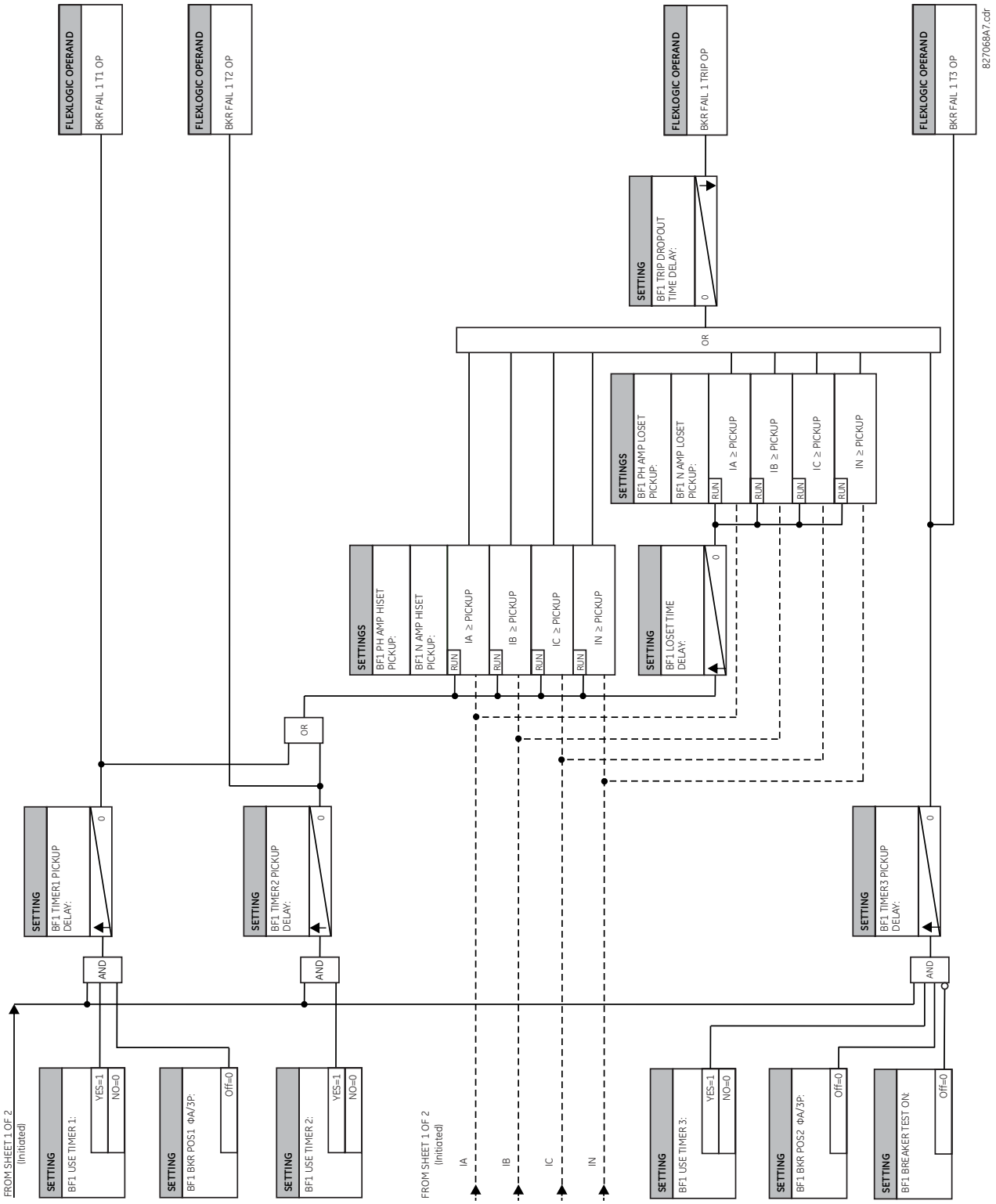

5.8.8 Voltage elements

5.8.8.1 Menu

SETTINGS ⇨⇩ GROUPED ELEMENTS ⇨ SETTING GROUP 1(6) ⇨⇩ VOLTAGE ELEMENTS

■ VOLTAGE ELEMENTS ■	⇔	■ PHASE ■ UNDERVOLTAGE1	See below
		⇩	
	⇕	■ PHASE ■ UNDERVOLTAGE3	
	⇕	■ PHASE ■ OVERVOLTAGE1	See page 5-268
		⇩	
	⇕	■ PHASE ■ OVERVOLTAGE3	
	⇕	■ NEUTRAL OV1 ■	See page 5-269
		⇩	
	⇕	■ NEUTRAL OV3 ■	
	⇕	■ NEG SEQ OV 1 ■	See page 5-270
		⇩	
	⇕	■ NEG SEQ OV 3 ■	
	⇕	■ AUXILIARY OV1 ■	See page 5-271
		⇩	
	⇕	■ AUXILIARY OV3 ■	
	⇕	■ VOLTAGE ■ DIFFERENTIAL 1	See page 5-272
		⇩	
	⇕	■ VOLTAGE ■ DIFFERENTIAL 3	
	⇕	■ BANK ■ OVERVOLTAGE	See page 5-275
	⇕	■ NEUTRAL VOLTAGE ■ UNBALANCE 1	See page 5-279
		⇩	
	⇑	■ NEUTRAL VOLTAGE ■ UNBALANCE 3	

These protection elements can be used for a variety of applications, such as

- **Undervoltage protection** — For voltage sensitive loads, such as induction motors, a drop in voltage increases the drawn current, which can cause dangerous overheating in the motor. The undervoltage protection feature can be used to either cause a trip or generate an alarm when the voltage drops below a specified voltage setting for a specified time delay.

- **Permissive functions** — The undervoltage feature can be used to block the functioning of external devices by operating an output relay when the voltage falls below the specified voltage setting. The undervoltage feature can also be used to block the functioning of other elements through the block feature of those elements.
- **Source transfer schemes** — In the event of an undervoltage, a transfer signal can be generated to transfer a load from its normal source to a standby or emergency power source.

The undervoltage elements can be programmed to have a definite time delay characteristic. The definite time curve operates when the voltage drops below the pickup level for a specified period of time. The time delay is adjustable from 0 to 600.00 seconds in steps of 0.01. The undervoltage elements can also be programmed to have an inverse time delay characteristic.

The undervoltage delay setting defines the family of curves shown as follows.

$$T = \frac{D}{\left(1 - \frac{V}{V_{pickup}}\right)} \qquad \textbf{Eq. 5-20}$$

where

T = operating time
D = undervoltage delay setting (D = 0.00 operates instantaneously)
V = secondary voltage applied to the relay
V_{pickup} = pickup level

Figure 5-133: Inverse time undervoltage curves

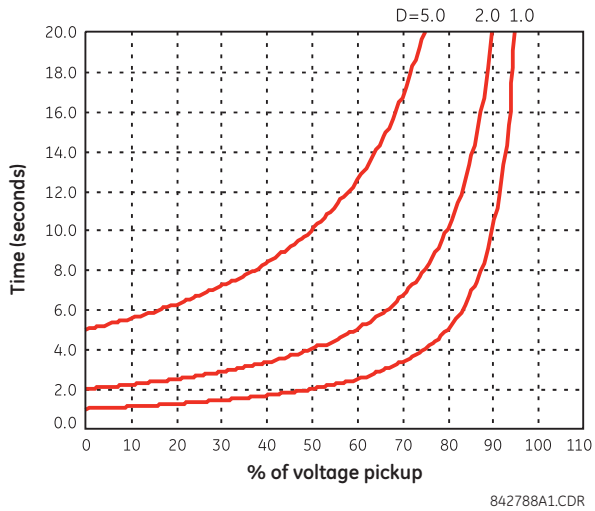

At 0% of pickup, the operating time equals the **PHASE UNDERVOLTAGE DELAY** setting.

5.8.8.2 Phase undervoltage (ANSI 27P, IEC PTUV)

SETTINGS ⇨⇩ GROUPED ELEMENTS ⇨ SETTING GROUP 1(6) ⇨⇩ VOLTAGE ELEMENTS ⇨ PHASE UNDERVOLTAGE1(3)

■ PHASE ■ UNDERVOLTAGE1	⇔	PHASE UV1 FUNCTION: Disabled	Range: Disabled, Enabled
	⇩	PHASE UV1 SIGNAL SOURCE: SRC 1	Range: SRC 1, SRC 2, SRC 3, SRC 4, SRC 5, SRC 6
	⇩	PHASE UV1 MODE: Phase to Ground	Range: Phase to Ground, Phase to Phase
	⇩	PHASE UV1 PICKUP: 1.000 pu	Range: 0.004 to 3.000 pu in steps of 0.001

⇕	**PHASE UV1 CURVE: Definite Time**	Range: Definite Time, Inverse Time
⇕	**PHASE UV1 DELAY: 1.00 s**	Range: 0.00 to 600.00 s in steps of 0.01
⇕	**PHASE UV1 MINIMUM VOLTAGE: 0.100 pu**	Range: 0.000 to 3.000 pu in steps of 0.001
⇕	**PHASE UV1 BLOCK: Off**	Range: FlexLogic operand
⇕	**PHASE UV1 TARGET: Self-reset**	Range: Self-reset, Latched, Disabled
⇧	**PHASE UV1 EVENTS: Disabled**	Range: Disabled, Enabled

One element is provided per each VT bank to a maximum of three.

This element is used to give a time-delay operating characteristic versus the applied fundamental voltage (phase-to-ground or phase-to-phase for wye VT connection, or phase-to-phase for delta VT connection) or as a definite time element. The element resets instantaneously if the applied voltage exceeds the dropout voltage. The delay setting selects the minimum operating time of the phase undervoltage. The minimum voltage setting selects the operating voltage below which the element is blocked (a setting of "0" allows a dead source to be considered a fault condition).

Figure 5-134: Phase undervoltage1 logic

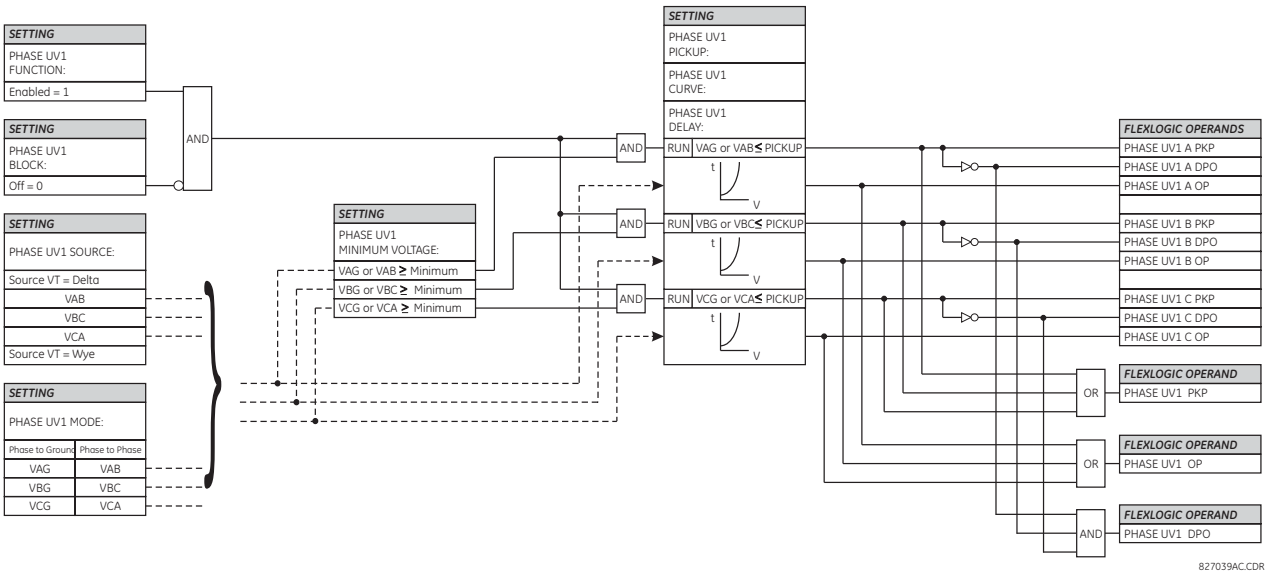

5.8.8.3 Phase overvoltage (ANSI 59P, IEC PTOV)

SETTINGS ⇨⇩ GROUPED ELEMENTS ⇨ SETTING GROUP 1(6) ⇨⇩ VOLTAGE ELEMENTS ⇨⇩ PHASE OVERVOLTAGE1(3)

■ **PHASE** ■ **OVERVOLTAGE1**	⇔	**PHASE OV1 FUNCTION: Disabled**	Range: Disabled, Enabled
	⇕	**PHASE OV1 SIGNAL SOURCE: SRC 1**	Range: SRC 1, SRC 2, SRC 3, SRC 4, SRC 5, SRC 6
	⇕	**PHASE OV1 PICKUP: 1.000 pu**	Range: 0.004 to 3.000 pu in steps of 0.001
	⇕	**PHASE OV1 PICKUP DELAY: 1.00 s**	Range: 0.00 to 600.00 s in steps of 0.01

⇕	**PHASE OV1 RESET DELAY: 1.00 s**	Range: 0.00 to 600.00 s in steps of 0.01
⇕	**PHASE OV1 BLOCK: Off**	Range: FlexLogic Operand
⇕	**PHASE OV1 TARGET: Self-reset**	Range: Self-reset, Latched, Disabled
⇧	**PHASE OV1 EVENTS: Disabled**	Range: Disabled, Enabled

A phase overvoltage element is used as an instantaneous element with no intentional time delay or as a definite time element. The input voltage is the phase-to-phase voltage, either measured directly from delta-connected VTs or as calculated from phase-to-ground (wye) connected VTs. The figure shows specific voltages to be used for each phase.

Figure 5-135: Phase overvoltage logic

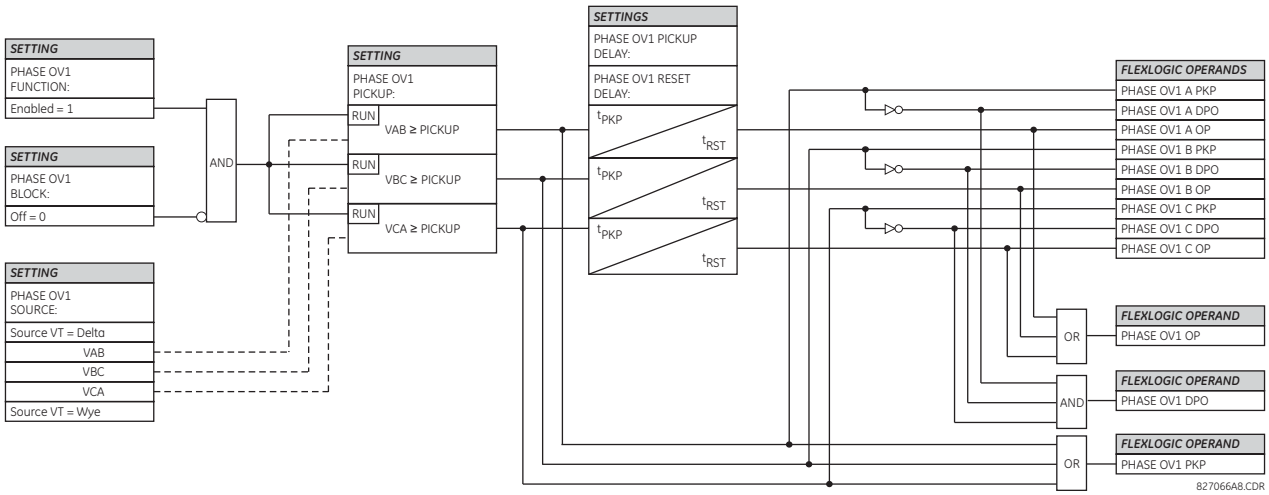

NOTE

If the source VT is wye-connected, then the phase overvoltage pickup condition is $V > \sqrt{3}$ x Pickup for V_{AB}, V_{BC}, and V_{CA}.

5.8.8.4 Neutral overvoltage (ANSI 59N, IEC PTOV)

SETTINGS ⇨⇩ GROUPED ELEMENTS ⇨ SETTING GROUP 1(6) ⇨⇩ VOLTAGE ELEMENTS ⇨⇩ NEUTRAL OV1(3)

■ **NEUTRAL OV1** ■	⇔	**NEUTRAL OV1 FUNCTION: Disabled**	Range: Disabled, Enabled
	⇕	**NEUTRAL OV1 SIGNAL SOURCE: SRC 1**	Range: SRC 1, SRC 2, SRC 3, SRC 4, SRC 5, SRC 6
	⇕	**NEUTRAL OV1 PICKUP: 0.300 pu**	Range: 0.004 to 3.000 pu in steps of 0.001
	⇕	**NEUTRAL OV1 CURVE: Definite Time**	Range: Definite Time, FlexCurve A, FlexCurve B, FlexCurve C
	⇕	**NEUTRAL OV1 PICKUP: DELAY: 1.00 s**	Range: 0.00 to 600.00 s in steps of 0.01
	⇕	**NEUTRAL OV1 RESET: DELAY: 1.00 s**	Range: 0.00 to 600.00 s in steps of 0.01
	⇕	**NEUTRAL OV1 BLOCK: Off**	Range: FlexLogic operand

⇕	**NEUTRAL OV1 TARGET: Self-reset**	Range: Self-reset, Latched, Disabled
⇧	**NEUTRAL OV1 EVENTS: Disabled**	Range: Disabled, Enabled

The neutral overvoltage element is used to detect asymmetrical system voltage condition due to a ground fault or to the loss of one or two phases of the source. The element responds to the system neutral voltage (3V_0), calculated from the phase voltages. The nominal secondary voltage of the phase voltage channels entered under **SETTINGS ⇨⇩ SYSTEM SETUP ⇨ AC INPUTS ⇨⇩ VOLTAGE BANK ⇨ PHASE VT SECONDARY** is the p.u. base used when setting the pickup level.

The neutral overvoltage element can provide a time-delayed operating characteristic versus the applied voltage (initialized from FlexCurves A, B, or C) or be used as a definite time element. The **NEUTRAL OV1 PICKUP DELAY** setting applies only if the **NEUTRAL OV1 CURVE** setting is "Definite Time." The source assigned to this element must be configured for a phase VT.

VT errors and normal voltage unbalance must be considered when setting this element. This function requires the VTs to be wye-connected.

Figure 5-136: Neutral overvoltage1 logic

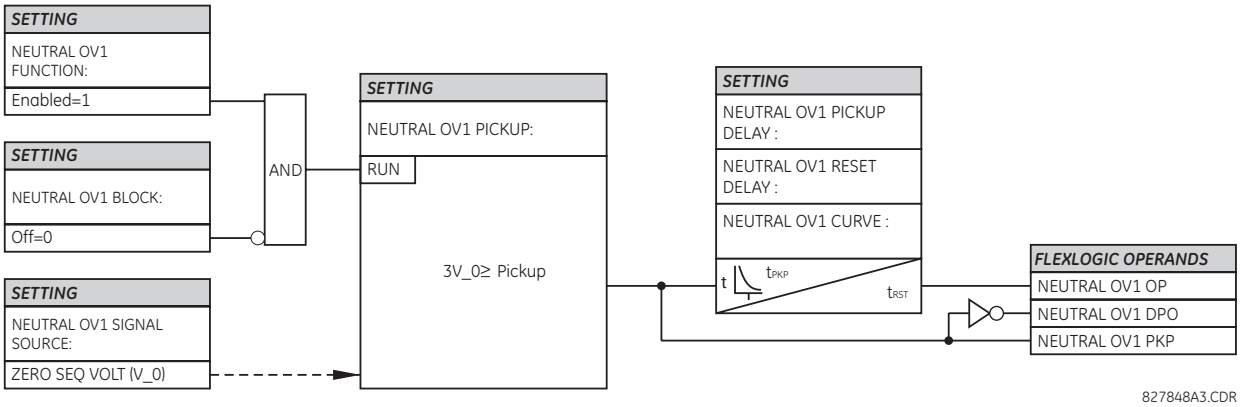

5.8.8.5 Negative-sequence overvoltage (ANSI 59Q, IEC PTOV)

SETTINGS ⇨⇩ GROUPED ELEMENTS ⇨ SETTING GROUP 1(6) ⇨⇩ VOLTAGE ELEMENTS ⇨⇩ NEG SEQ OV 1(3)

■ **NEG SEQ OV 1** ■	⇔	**NEG SEQ OV 1 FUNCTION: Disabled**	Range: Disabled, Enabled
	⇕	**NEG SEQ OV 1 SIGNAL SOURCE: SRC 1**	Range: SRC 1, SRC 2, SRC 3, SRC 4, SRC 5, SRC 6
	⇕	**NEG SEQ OV 1 PICKUP: 0.300 pu**	Range: 0.004 to 1.250 pu in steps of 0.001
	⇕	**NEG SEQ OV 1 PICKUP DELAY: 0.50 s**	Range: 0.00 to 600.00 s in steps of 0.01
	⇕	**NEG SEQ OV 1 RESET DELAY: 0.50 s**	Range: 0.00 to 600.00 s in steps of 0.01
	⇕	**NEG SEQ OV 1 BLOCK: Off**	Range: FlexLogic operand
	⇕	**NEG SEQ OV 1 TARGET: Self-reset**	Range: Self-reset, Latched, Disabled
	⇧	**NEG SEQ OV 1 EVENTS: Disabled**	Range: Disabled, Enabled

There is one negative-sequence overvoltage element available per CT bank, to a maximum of three.

Use the negative-sequence overvoltage element to detect loss of one or two phases of the source, a reversed phase sequence of voltage, or a non-symmetrical system voltage condition.

Figure 5-137: Negative-sequence overvoltage logic

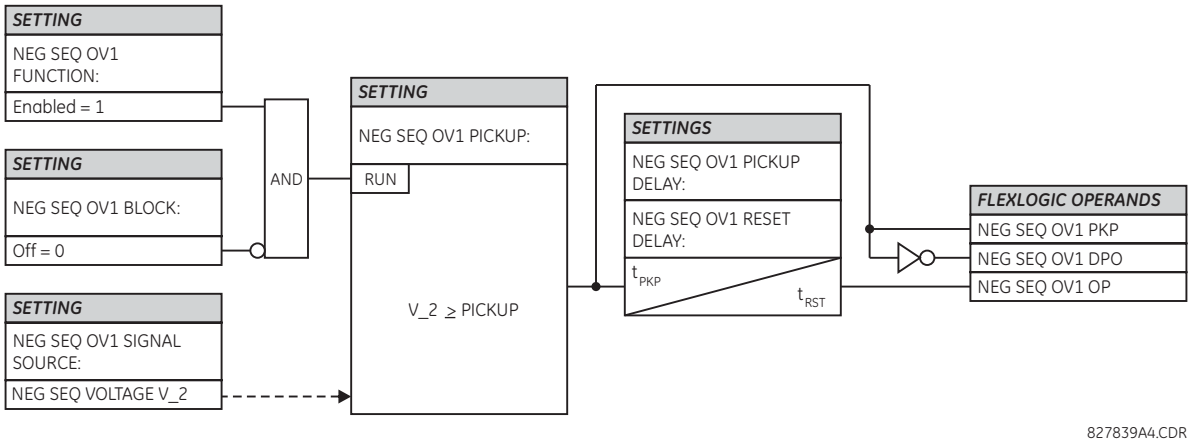

5.8.8.6 Auxiliary overvoltage (ANSI 59X, IEC PTOV)

SETTINGS ⇨⇩ GROUPED ELEMENTS ⇨ SETTING GROUP 1(6) ⇨⇩ VOLTAGE ELEMENTS ⇨⇩ AUXILIARY OV1(3)

■ **AUXILIARY OV1** ■	⇔	**AUX OV1 FUNCTION: Disabled**	Range: Disabled, Enabled
	⇩	**AUX OV1 SIGNAL SOURCE: SRC 1**	Range: SRC 1, SRC 2, SRC 3, SRC 4, SRC 5, SRC 6
	⇩	**AUX OV1 PICKUP: 0.300 pu**	Range: 0.004 to 3.000 pu in steps of 0.001
	⇩	**AUX OV1 PICKUP DELAY: 1.00 s**	Range: 0.00 to 600.00 s in steps of 0.01
	⇩	**AUX OV1 RESET DELAY: 1.00 s**	Range: 0.00 to 600.00 s in steps of 0.01
	⇩	**AUX OV1 BLOCK: Off**	Range: FlexLogic operand
	⇩	**AUX OV1 TARGET: Self-reset**	Range: Self-reset, Latched, Disabled
	⇩	**AUX OV1 EVENTS: Disabled**	Range: Disabled, Enabled

This element is intended for monitoring overvoltage conditions of the auxiliary voltage. The nominal secondary voltage of the auxiliary voltage channel entered under **SYSTEM SETUP ⇨ AC INPUTS ⇩⇨ VOLTAGE BANK X5 ⇩⇨ AUXILIARY VT X5 SECONDARY** is the per-unit (pu) base used when setting the pickup level.

Figure 5-138: Auxiliary overvoltage logic

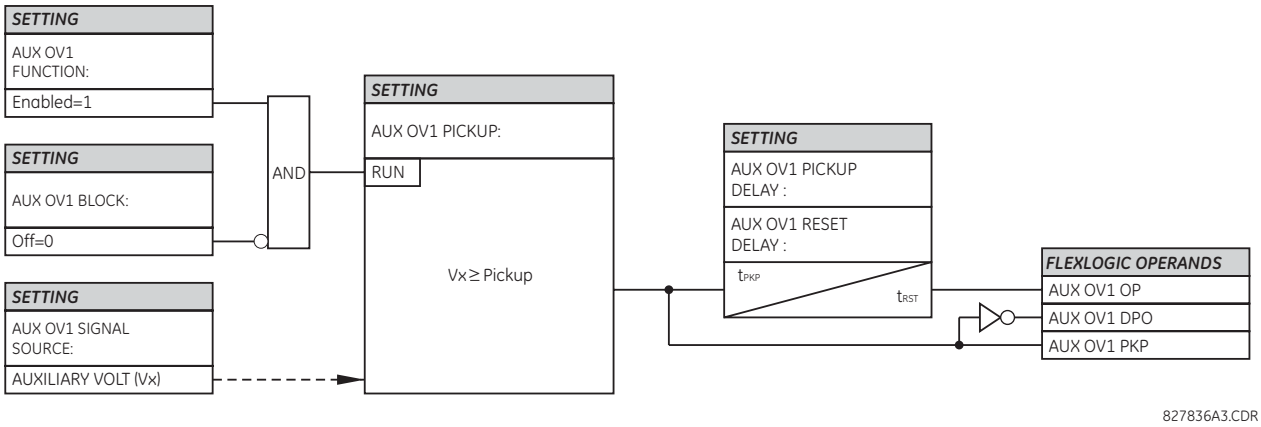

5.8.8.7 Bank voltage differential (ANSI 87V, IEC PDIF)

SETTINGS ⇨⇩ GROUPED ELEMENTS ⇨ SETTING GROUP 1(6) ⇨⇩ VOLTAGE ELEMENTS ⇨⇩ VOLTAGE DIFFERENTIAL 1(3)

■ VOLTAGE ■ DIFFERENTIAL 1	⇔	**VOLTAGE DIF 1 FUNCTION: Disabled**	Range: Disabled, Enabled
	⇕	**VOLTAGE DIF 1 BUS SOURCE: SRC 1**	Range: SRC 1, SRC 2, SRC 3, SRC 4, SRC 5, SRC 6
	⇕	**VOLTAGE DIF 1 TAP SOURCE: SRC 1**	Range: SRC 1, SRC 2, SRC 3, SRC 4, SRC 5, SRC 6
	⇕	**VOLTAGE DIF 1 BANK GROUND: Grounded**	Range: Grounded, Ungrounded
	⇕	**VOLTAGE DIF 1 MATCH FACTOR A: 2.0000**	Range: 0.5000 to 2000.0000 in steps of 0.0001
	⇕	**VOLTAGE DIF 1 MATCH FACTOR B: 2.0000**	Range: 0.5000 to 2000.0000 in steps of 0.0001
	⇕	**VOLTAGE DIF 1 MATCH FACTOR C: 2.0000**	Range: 0.5000 to 2000.0000 in steps of 0.0001
	⇕	**VOLTAGE DIF 1 STG 1A PICKUP: 0.010 pu**	Range: 0.001 to 1.000 pu in steps of 0.001
	⇕	**VOLTAGE DIF 1 STG 2A PICKUP: 0.020 pu**	Range: 0.001 to 1.000 pu in steps of 0.001
	⇕	**VOLTAGE DIF 1 STG 3A PICKUP: 0.030 pu**	Range: 0.001 to 1.000 pu in steps of 0.001
	⇕	**VOLTAGE DIF 1 STG 4A PICKUP: 0.040 pu**	Range: 0.001 to 1.000 pu in steps of 0.001
	⇕	**VOLTAGE DIF 1 STG 1B PICKUP: 0.010 pu**	Range: 0.001 to 1.000 pu in steps of 0.001
	⇕	**VOLTAGE DIF 1 STG 2B PICKUP: 0.020 pu**	Range: 0.001 to 1.000 pu in steps of 0.001
	⇕	**VOLTAGE DIF 1 STG 3B PICKUP: 0.030 pu**	Range: 0.001 to 1.000 pu in steps of 0.001
	⇕	**VOLTAGE DIF 1 STG 4B PICKUP: 0.040 pu**	Range: 0.001 to 1.000 pu in steps of 0.001

⇕	**VOLTAGE DIF 1 STG 1C PICKUP: 0.010 pu**	Range: 0.001 to 1.000 pu in steps of 0.001
⇕	**VOLTAGE DIF 1 STG 2C PICKUP: 0.020 pu**	Range: 0.001 to 1.000 pu in steps of 0.001
⇕	**VOLTAGE DIF 1 STG 3C PICKUP: 0.030 pu**	Range: 0.001 to 1.000 pu in steps of 0.001
⇕	**VOLTAGE DIF 1 STG 4C PICKUP: 0.040 pu**	Range: 0.001 to 1.000 pu in steps of 0.001
⇕	**VOLTAGE DIF 1 STG 1 PKP DELAY: 30.00 s**	Range: 0.00 to 600.00 s in steps of 0.01
⇕	**VOLTAGE DIF 1 STG 2 PKP DELAY: 10.00 s**	Range: 0.00 to 600.00 s in steps of 0.01
⇕	**VOLTAGE DIF 1 STG 3 PKP DELAY: 1.00 s**	Range: 0.00 to 600.00 s in steps of 0.01
⇕	**VOLTAGE DIF 1 STG 4 PKP DELAY: 0.20 s**	Range: 0.00 to 600.00 s in steps of 0.01
⇕	**VOLTAGE DIF 1 DPO DELAY: 0.25 s**	Range: 0.00 to 600.00 s in steps of 0.01
⇕	**VOLT DIF 1 BLK STG1: Off**	Range: FlexLogic operand
⇕	**VOLT DIF 1 BLK STG 2: Off**	Range: FlexLogic operand
⇕	**VOLT DIF 1 BLK STG 3: Off**	Range: FlexLogic operand
⇕	**VOLT DIF 1 BLK STG 4: Off**	Range: FlexLogic operand
⇕	**VOLT DIF 1 TARGET: Self-Reset**	Range: Self-reset, Latched, Disabled
⇧	**VOLT DIF 1 EVENTS: Disabled**	Range: Disabled, Enabled

Up to three identical voltage differential elements, one per each VT bank configured in hardware, are provided.

The element responds to a differential signal between magnitudes of the bus and tap voltages. The latter is scaled using a matching factor to account for the position of the tap. An automatic setting procedure is available under the **COMMAND** menu to calculate automatically the matching factor when installing the relay or after repairs of the bank.

Figure 5-139: Voltage differential basic connections

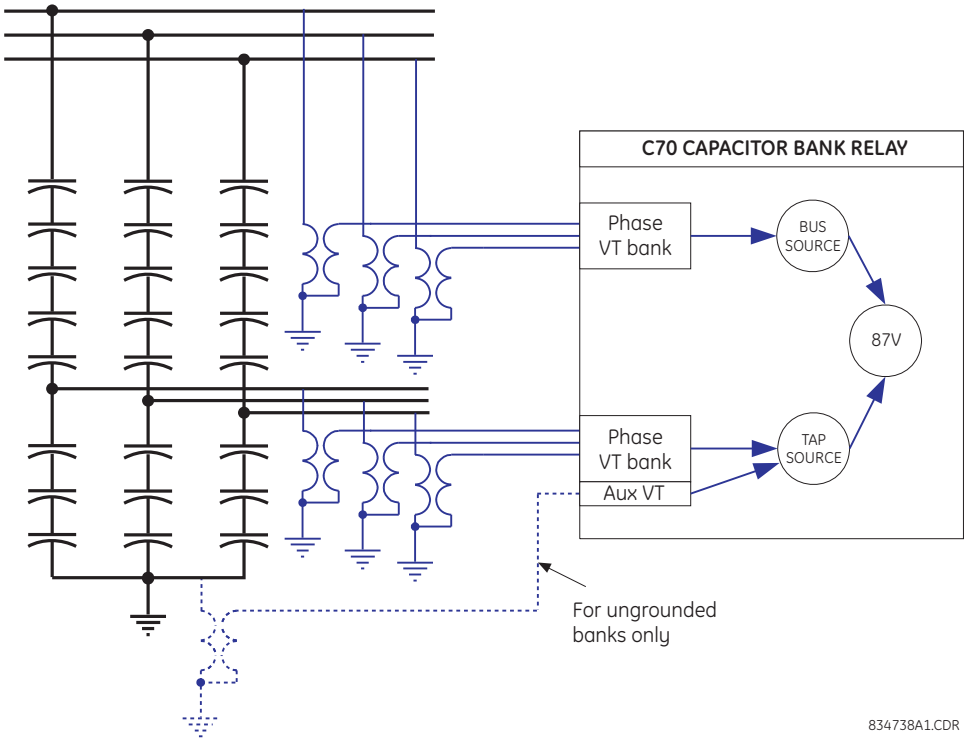

5

The function works with grounded and ungrounded banks. In the latter case, the neutral point voltage must be measured by the relay. For information, see the Application of Settings chapter.

The following settings are available for each voltage differential element.

VOLTAGE DIF 1 BUS SOURCE — Indicates signal source that signifies the bus voltage of the bank. The function uses this source as reference for pu settings of pickup thresholds, and scales the tap voltages to this signal level. The VT ratio and secondary nominal voltage are set under separate menu. Voltages of this source must be connected in wye for the function to operate.

VOLTAGE DIF 1 TAP SOURCE — Indicates signal source that signifies the tap voltage of the bank. The function scales this voltage to the bus level using the matching factor setting. The matching is performed on primary voltages, or per unit of the bus voltage. The VT ratio and secondary nominal voltage are set under separate menu. Voltages of this source must be connected in wye for the function to operate. If this function is used on ungrounded banks, the tap source must have the neutral point voltage of the bank configured under the auxiliary voltage channel. That auxiliary voltage must be labelled "Vn" under the VT setup menu.

VOLTAGE DIF 1 BANK GROUND — Indicates if the protected bank is grounded or ungrounded. In the latter case, the auxiliary voltage configured under the tap source is subtracted from the phase voltages of both the bus and tap. This results in the actual voltage drop along the capacitor string, and thus facilitates the voltage differential principle. The relay automatically compensates for different VT ratios and secondary voltages of the neutral point voltage and the bus and tap voltages.

VOLTAGE DIF 1 MATCH FACTOR A to **VOLTAGE DIF 1 MATCH FACTOR C** — Specifies the division ratio of the healthy bank, that is, the ratio between the bus and tap voltages (value greater than 1). The matching factor is applied as a multiplier for the primary tap voltage before comparing with the primary bus voltage. Quality of balancing the bank with a given value of this setting can be viewed under the **ACTUAL VALUES** menu. An automatic setting procedure is available under the **COMMANDS** menu to calculate the matching factors automatically.

VOLTAGE DIF 1 STG 1A PICKUP to **VOLTAGE DIF 1 STG 4C PICKUP** — Specify pickup thresholds for stages 1 through 4 for phases A to C in per-units (pu) of the nominal bus voltage. A value of 1 pu is a product of the nominal secondary voltage and VT ratio of the voltage bank configured under the bus source of this function. Four independent stages are provided for each phase of protection.

VOLTAGE DIF 1 STG 1 PKP DELAY — Specifies the pickup time delay, individually per each stage of alarming/tripping. Note that each of the 12 comparators (four stages in three phases) uses an individual timer, but settings for these timers are controlled individually per each stage, not per phase. The timers use a common drop-out time delay specified by the next setting.

VOLTAGE DIF 1 DPO DELAY — Controls a drop out delay for the operate FlexLogic operands. Note that individual stages apply individually configurable pickup delays, but use this common drop out delay.

VOLT DIF 1 BLK STG 1 to **VOLT DIF 1 BLK STG 4** — These inputs are used to block the function on a per stage basis when required. At minimum this function shall be blocked when the bank is offline, or else it operates unnecessarily. Either breaker position or undercurrent indication via any available instantaneous function, or a combination, can be used for blocking. Also consider the VT fuse fail condition from both the bus and tap VT. When unblocked, the function becomes operational after five cycles of intentional delay.

Figure 5-140: Voltage differential logic

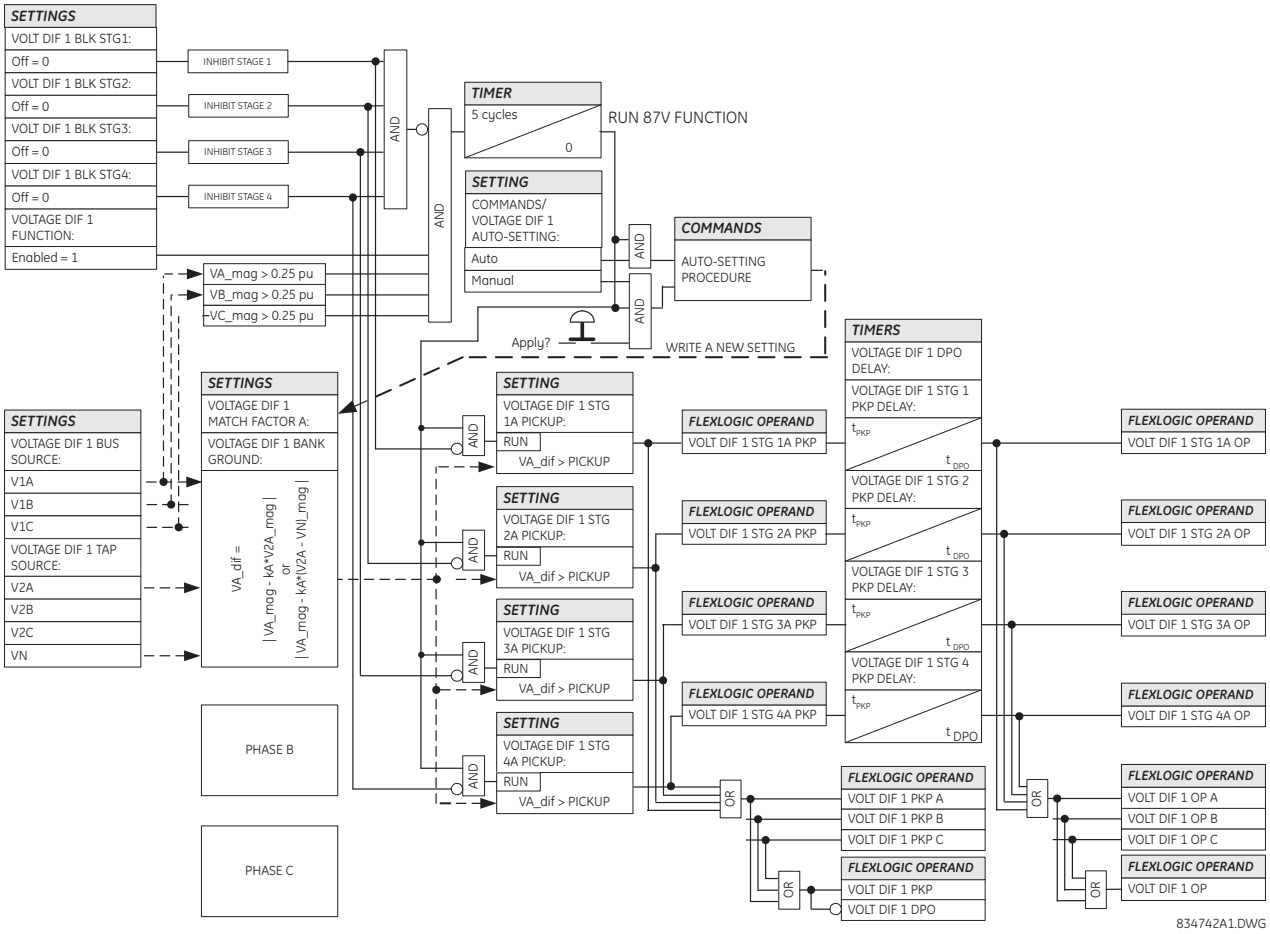

5.8.8.8 Bank phase overvoltage (ANSI 59B, IEC PTOV)

SETTINGS ⇨⇩ GROUPED ELEMENTS ⇨ SETTING GROUP 1(6) ⇨⇩ VOLTAGE ELEMENTS ⇨⇩ BANK OVERVOLTAGE ⇨ BANK OVERVOLTAGE 1(3)

■ **BANK OVERVOLTAGE 1** ■	⇔	**BANK OV 1 FUNCTION: Disabled**	Range: Disabled, Enabled
	⇩	**BANK OV 1 BUS SOURCE: SRC 1**	Range: SRC 1, SRC 2, SRC 3, SRC 4, SRC 5, SRC 6
	⇩	**BANK OV 1 NTRL SOURCE: SRC 1**	Range: SRC 1, SRC 2, SRC 3, SRC 4, SRC 5, SRC 6

⇕	**BANK OV 1 BANK GROUND: Grounded**	Range: Grounded, Ungrounded, Ungr w/o Vn
⇕	**BANK OV 1 CURVE: FlexCurve A**	Range: FlexCurve A, FlexCurve B, FlexCurve C, FlexCurve D
⇕	**BANK OV 1 CURVE TIME MULTIPLIER: 1.00**	Range: 1.00 to 10.00 in steps of 0.01
⇕	**BANK OV 1 STG 1A PICKUP: 1.050 pu**	Range: 0.800 to 2.000 pu in steps of 0.001
⇕	**BANK OV 1 STG 2A PICKUP: 1.100 pu**	Range: 0.800 to 2.000 pu in steps of 0.001
⇕	**BANK OV 1 STG 3A PICKUP: 1.200 pu**	Range: 0.800 to 2.000 pu in steps of 0.001
⇕	**BANK OV 1 STG 4A PICKUP: 1.050 pu**	Range: 0.800 to 2.000 pu in steps of 0.001
⇕	**BANK OV 1 STG 1B PICKUP: 1.050 pu**	Range: 0.800 to 2.000 pu in steps of 0.001
⇕	**BANK OV 1 STG 2B PICKUP: 1.100 pu**	Range: 0.800 to 2.000 pu in steps of 0.001
⇕	**BANK OV 1 STG 3B PICKUP: 1.200 pu**	Range: 0.800 to 2.000 pu in steps of 0.001
⇕	**BANK OV 1 STG 4B PICKUP: 1.050 pu**	Range: 0.800 to 2.000 pu in steps of 0.001
⇕	**BANK OV 1 STG 1C PICKUP: 1.050 pu**	Range: 0.800 to 2.000 pu in steps of 0.001
⇕	**BANK OV 1 STG 2C PICKUP: 1.100 pu**	Range: 0.800 to 2.000 pu in steps of 0.001
⇕	**BANK OV 1 STG 3C PICKUP: 1.200 pu**	Range: 0.800 to 2.000 pu in steps of 0.001
⇕	**BANK OV 1 STG 4C PICKUP: 1.050 pu**	Range: 0.800 to 2.000 pu in steps of 0.001
⇕	**BANK OV 1 STG 1 PKP DELAY: 60.00 s**	Range: 0.00 to 600.00 s in steps of 0.01
⇕	**BANK OV 1 STG 2 PKP DELAY: 10.00 s**	Range: 0.00 to 600.00 s in steps of 0.01
⇕	**BANK OV 1 STG 3 PKP DELAY: 2.00 s**	Range: 0.00 to 600.00 s in steps of 0.01
⇕	**BANK OV 1 STG 4 PKP DELAY: 0.20 s**	Range: 0.00 to 600.00 s in steps of 0.01
⇕	**BANK OV 1 DPO DELAY: 0.25 s**	Range: 0.00 to 600.00 s in steps of 0.01
⇕	**BANK OV 1 BLK: Off**	Range: FlexLogic operand
⇕	**BANK OV 1 TARGET: Self-Reset**	Range: Self-reset, Latched, Disabled
⇑	**BANK OV 1 EVENTS: Disabled**	Range: Disabled, Enabled

Up to three identical bank overvoltage elements, one per each VT bank configured in hardware, are provided.

The bank phase overvoltage element responds to voltages across the capacitors of the bank. Three stages of definite time operation, and one stage of inverse time operation are provided. Pickup thresholds of this function are adjustable on a per-phase basis. The shape of the inverse time curve is user-programmable (via FlexCurves™) with individual pickup levels and a multiplier common for all three phases. The definite time delays are individually programmable per stage.

The function works with grounded and ungrounded banks. With ungrounded banks, either the neutral point voltage is measured by the relay and used to derive the true bank voltage based on the bus and neutral-point voltages, or a simplified method to provide proper voltage protection is used responding to vector differences between the phase-to-phase voltages.

When fed from wye-connected VTs, the function responds to phase-to-ground voltages. When fed from delta-connected VTs, it responds to the vector difference between the phase-to-phase voltages.

The function responds to true RMS voltages to account for effects of harmonics (harmonics impacting losses in the capacitor, harmonics increasing peak values in the voltages compared with the filtered fundamental frequency magnitudes).

Figure 5-141: Bank overvoltage basic connections

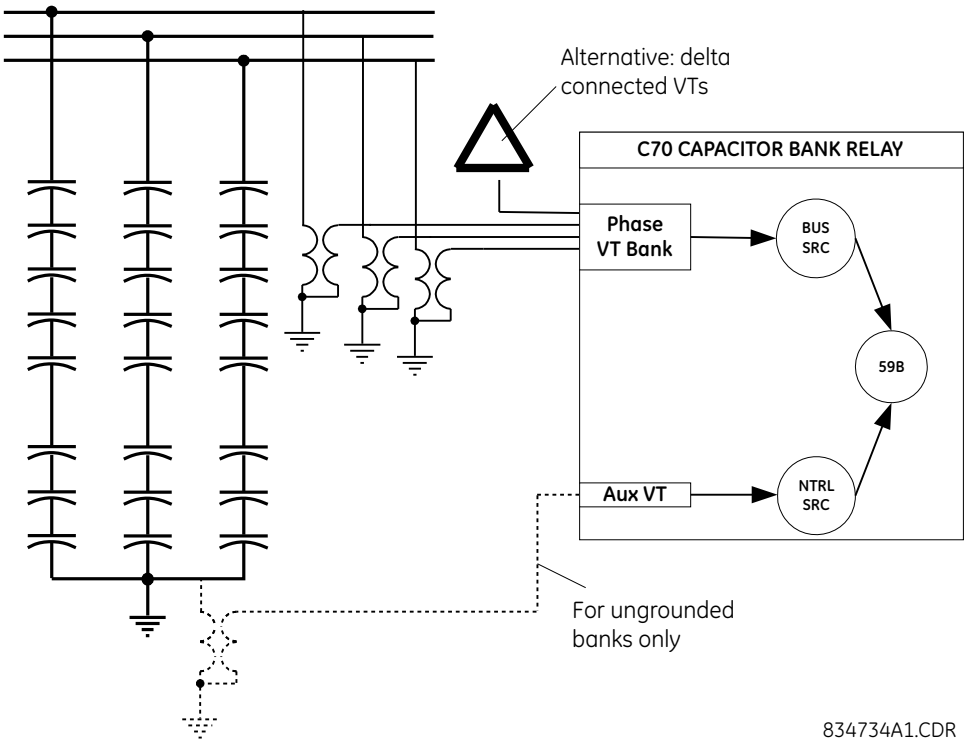

For more information, see the Application of Settings chapter.

The following settings are available for each bank phase overvoltage element.

BANK OV 1 BUS SOURCE — Indicates the signal source that signifies the bus voltage of the capacitor bank. The function uses this source as reference for per-unit (pu) settings of the pickup thresholds. The VT ratio and secondary nominal voltage are set under the **SETTINGS ⇨⇩ SYSTEM SETUP ⇨ AC INPUTS ⇨⇩ VOLTAGE BANK** menu.

BANK OV 1 NTRL SOURCE — Indicates the signal source that signifies the neutral-point voltage of the bank. The auxiliary voltage channel of this source is used, and must be labelled "Vn" under the VT setup menu. The neutral point voltage is used only when the function is applied to an ungrounded bank, to derive the true voltage drop across the capacitors. The VT ratio and secondary nominal voltage are set under the **SETTINGS ⇨⇩ SYSTEM SETUP ⇨ AC INPUTS ⇨⇩ VOLTAGE BANK** menu.

BANK OV 1 BANK GROUND — This setting indicates if the protected bank is grounded, ungrounded with the neutral point voltage measured, and ungrounded without the neutral point voltage. The relay automatically compensates for potentially different VT ratios and secondary voltages of the bus and neutral point voltages. The following table explains the operating signals of the function based on the input signals available to the relay.

Table 5-39: Operating signals based on input signals

VT connection	Bank configuration		
	Grounded	**Ungrounded**	**Ungrounded w/o VN**
Wye	Vop_A = VA Vop_B = VB Vop_C = VC	Vop_A = VA – VX Vop_B = VB – VX Vop_C = VC – VX	Vop_A = (VCA – VAB) / 3 Vop_B = (VAB – VBC) / 3 Vop_C = (VBC – VCA) / 3
Delta	Vop_A = (VCA – VAB) / 3 Vop_B = (VAB – VBC) / 3 Vop_C = (VBC – VCA) / 3		

BANK OV 1 CURVE — This setting specifies a FlexCurve used by the fourth inverse time stage of this function. FlexCurves are user-programmable on a point-by-point basis. This function applies a common curve shape in all three phases. However, the curve is specified as time versus multiple of pickup. With three individually programmable pickup values per phase one accommodates possible differences between individual phases of the bank even though a common curve shape is used.

Implementation of the inverse-time stage is based on the concept of a virtual disk emulating electromechanical relays. When above the pickup level, the function integrates towards the trip level at the rate dictated by the curve at a given multiple of pickup. When activated but with the operating signal below the pickup, the function integrates down toward a complete reset. This mode of operation assures dependability in situations when the voltage oscillates and causes stress to the protected capacitor in repetitive cycles each lasting too short to expire a straight timer. As a result of this implementation, the shape of the curve below multiple of pickup of 1 is important as it controls the speed of reset of a partially energized function.

BANK OV 1 STG 1A PICKUP to **BANK OV 1 STG 3C PICKUP** — Specify pickup thresholds for stages 1 through 3 in phases A through C in per-units (pu) of the nominal phase-to-ground bus voltage. A value of 1 pu is a product of the nominal secondary voltage and VT ratio of the voltage bank configured under the bus source of this function. With a delta VT configuration, a value of 1 pu is a product of the nominal secondary voltage and VT ratio divided by $\sqrt{3}$. Three independent stages of definite-time operation are provided for each phase of the bank.

BANK OV 1 STG 4A PICKUP to **BANK OV 1 STG 4C PICKUP** — Specify pickup thresholds for the inverse time stage 4 in phase A through C in per-units (pu) of the nominal phase-to-ground bus voltage. With a wye VT configuration, a value of 1 pu is a product of the nominal secondary voltage and VT ratio of the voltage bank configured under the bus source of this function. With a delta VT configuration, a value of 1 pu is a product of the nominal secondary voltage and VT ratio divided by $\sqrt{3}$. The inverse time stage uses a user-programmable FlexCurve selected by the **BANK OV 1 CURVE** setting.

BANK OV 1 STG 1 PKP DELAY to **BANK OV 1 STG 3 PKP DELAY** — Specify the pickup time delays for each definite time stage of alarming/tripping. Note that each of the nine comparators (three definite-time stages in three phases) uses an individual timer, but settings for these timers are controlled individually per each stage, not per phase. The timers use a common dropout time delay specified by the **BANK OV 1 DPO DELAY** setting.

BANK OV 1 DPO DELAY — This setting controls a dropout delay for the operate FlexLogic operands. Note that individual stages apply individually configurable pickup delays, but use this common dropout delay.

BANK OV 1 BLK — This input is used to block the function when required; in particular, when the bank is offline.

Figure 5-142: Bank phase overvoltage logic

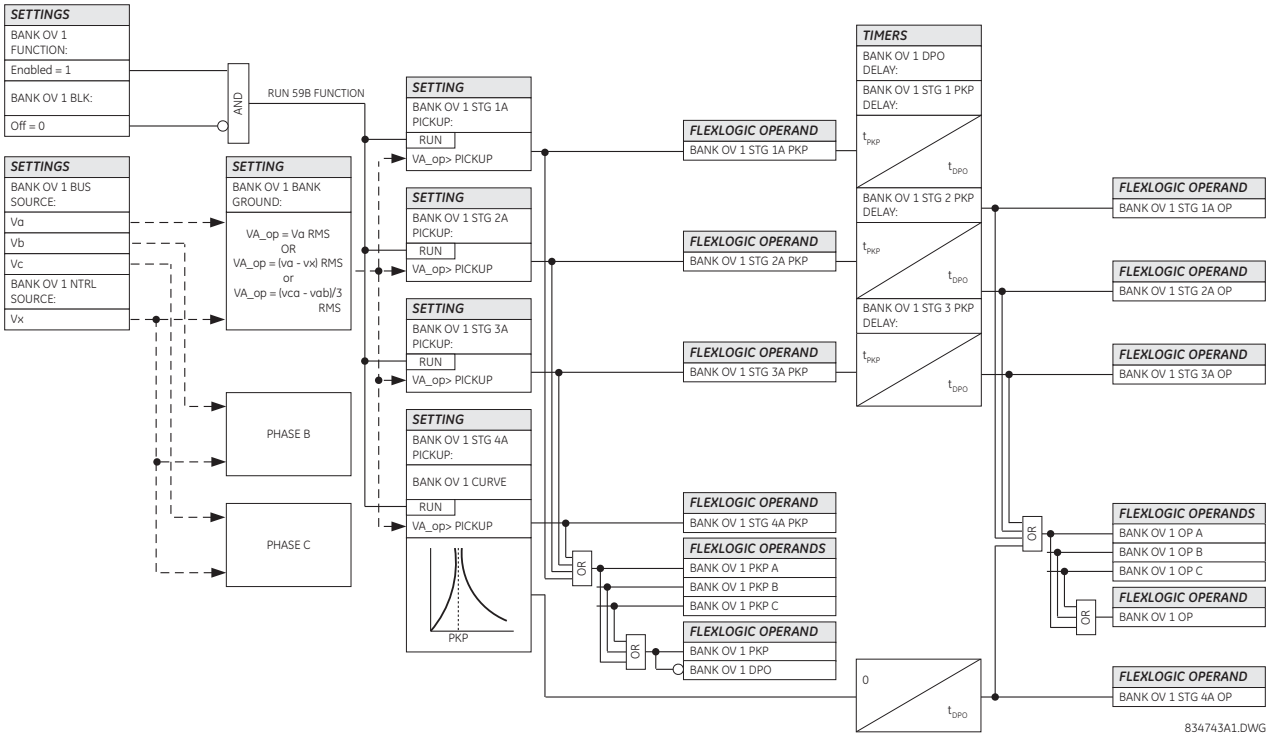

5.8.8.9 Neutral voltage unbalance (ANSI 59NU, IEC PVCB/PTOV)

SETTINGS ⇨⇩ GROUPED ELEMENTS ⇨ SETTING GROUP 1(6) ⇨⇩ VOLTAGE ELEMENTS ⇨⇩ NEUTRAL VOLTAGE UNBALANCE 1(3)

■ NEUTRAL VOLTAGE ■ UNBALANCE 1	⇔	NTRL VOL UNBAL 1 FUNCTION: Disabled	Range:	Disabled, Enabled
	⇩	NTRL VOL UNBAL 1 NTRL SOURCE: SRC 1	Range:	SRC 1, SRC 2, SRC 3, SRC 4, SRC 5, SRC 6
	⇩	NTRL VOL UNBAL 1 BUS SOURCE: SRC 1	Range:	SRC 1, SRC 2, SRC 3, SRC 4, SRC 5, SRC 6
	⇩	NTRL VOL UNBAL 1 BUS 3V0: Calculated	Range:	Calculated, Measured
	⇩	NTRL VOL UNBAL 1 GROUND: VT (ungrnd)	Range:	VT (ungrnd), CTxR (grnd)
	⇩	NTRL VOL UNBAL 1 AB RATIO: 1.0000	Range:	0.7500 to 1.2500 in steps of 0.0001
	⇩	NTRL VOL UNBAL 1 AC RATIO: 1.0000	Range:	0.7500 to 1.2500 in steps of 0.0001
	⇩	NTRL VOL UNBAL 1 STG 1 PKP: 0.010 pu	Range:	0.001 to 1.000 pu in steps of 0.001
	⇩	NTRL VOL UNBAL 1 STG 1 SLOPE: 0.0%	Range:	0.0 to 10.0% in steps of 0.1
	⇩	NTRL VOL UNBAL 1 STG 2 PKP: 0.020 pu	Range:	0.001 to 1.000 pu in steps of 0.001
	⇩	NTRL VOL UNBAL 1 STG 2 SLOPE: 0.0%	Range:	0.0 to 10.0% in steps of 0.1

⇕	**NTRL VOL UNBAL 1 STG 3 PKP: 0.020 pu**	Range: 0.001 to 1.000 pu in steps of 0.001
⇕	**NTRL VOL UNBAL 1 STG 3 SLOPE: 5.0%**	Range: 0.0 to 10.0% in steps of 0.1
⇕	**NTRL VOL UNBAL 1 STG 4 PKP: 0.030 pu**	Range: 0.001 to 1.000 pu in steps of 0.001
⇕	**NTRL VOL UNBAL 1 STG 4 SLOPE: 5.0%**	Range: 0.0 to 10.0% in steps of 0.1
⇕	**NTRL VOL UNBAL 1 STG 1 PKP DELAY: 30.00 s**	Range: 0.00 to 600.00 s in steps of 0.01
⇕	**NTRL VOL UNBAL 1 STG 2 PKP DELAY: 10.00 s**	Range: 0.00 to 600.00 s in steps of 0.01
⇕	**NTRL VOL UNBAL 1 STG 3 PKP DELAY: 1.00 s**	Range: 0.00 to 600.00 s in steps of 0.01
⇕	**NTRL VOL UNBAL 1 STG 4 PKP DELAY: 0.20 s**	Range: 0.00 to 600.00 s in steps of 0.01
⇕	**NTRL VOL UNBAL 1 DPO DELAY: 0.25 s**	Range: 0.00 to 600.00 s in steps of 0.01
⇕	**NTRL VOL 1 BLK STG1: Off**	Range: FlexLogic operand
⇕	**NTRL VOL 1 BLK STG2: Off**	Range: FlexLogic operand
⇕	**NTRL VOL 1 BLK STG3: Off**	Range: FlexLogic operand
⇕	**NTRL VOL 1 BLK STG4: Off**	Range: FlexLogic operand
⇕	**NTRL VOL UNBAL 1 TARGET: Self-Reset**	Range: Self-reset, Latched, Disabled
⇑	**NTRL VOL UNBAL 1 EVENTS: Disabled**	Range: Disabled, Enabled

Up to three identical neutral voltage unbalance elements, one per each VT bank configured in hardware, are provided.

The element responds to the voltage signal at the neutral point of the capacitor bank. The operating equations are properly compensated for both the system unbalance such as during close-in external faults, and the inherent bank unbalance. The bus zero-sequence voltage required for compensation of the system unbalance can be measured internally to the relay from phase voltages, or delivered as a 3V0 signal from an open-corner-delta VT via an auxiliary voltage channel of the relay.

Compensation for the inherent unbalance of the protected bank uses the B and C phase voltages, and thus this function requires wye connected phase VTs. The inherent unbalance is zeroed out using ratios of the reactances between the reference phase A, and the two other phases. An automatic setting procedure is available under the **COMMAND** menu to calculate the compensating factors automatically when installing the relay, or after repairs of the bank.

To enhance performance under large system unbalances when the neutral-point and system zero-sequence voltages can become significant, a concept of a restraint is introduced. The slope of the operating characteristic is user adjustable, and if required, it can be effectively removed yielding a straight compensated overvoltage function.

For information, see the Application of Settings chapter.

Figure 5-143: Neutral voltage unbalance basic connection

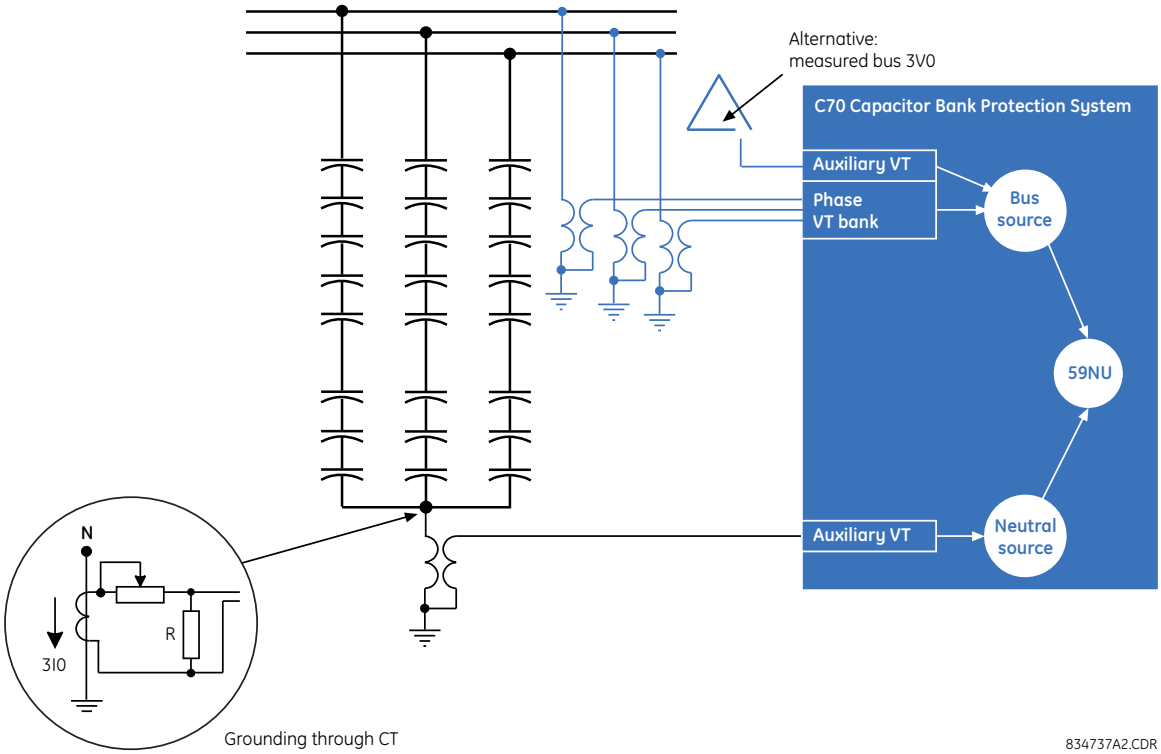

The following settings are available for all three neutral voltage unbalance elements.

NTRL VOL UNBAL 1 NTRL SOURCE — Indicates signal source that signifies the neutral-point voltage of the protected bank. This single-phase voltage is to be configured under the auxiliary VT channel. The VT ratio and secondary nominal voltage are set under separate menu. Nominal voltage of this auxiliary channel becomes a unit (1 pu) for the pickup settings of this function.

NTRL VOL UNBAL 1 BUS SOURCE — Indicates signal source that signifies the bus voltages of the bank. This source must have the phase voltages configured in order to facilitate compensation for the inherent unbalance of the bank. The zero-sequence voltage required for system unbalance compensation can be derived from the phase voltages, or delivered to the relay from an external source, typically a broken-delta VT (the selection is controlled by the next setting of this function). In the latter case, the 3V0 signal is expected and must be wired and configured under the auxiliary voltage channel of this source. This 3V0 voltage must be labelled as "Vn" under the VT configuration. The VT ratio and secondary nominal voltage are set under separate menu. Phase voltages of this source must be connected in wye for the function to operate. The function uses several voltages potentially produced by VTs of different ratios and nominal secondary values. The relay scales all the signals automatically for meaningful calculations.

NTRL VOL UNBAL 1 BUS 3V0 — Specifies the source of the bus zero-sequence voltage required for system unbalance compensation. If set to "Calculated", the relay would derive the zero-sequence voltage as a vector sum of the three phase voltages and will run the function if voltage in all three phases is greater than 0.25 pu. If set to "Measured", the relay expects the 3V0 signal (not a V0) to be wired to the relay under the auxiliary channel of the bus source, and labelled as "Vn". In this case, the voltage check to run this function is not performed.

NTRL VOL UNBAL 1 GROUND — Selects the grounding arrangement of the bank. For ungrounded banks, set it to "VT (ungrnd)". When the bank neutral is solidly grounded through the CT with a resistor in the CT secondary, set it as "CTxR (grnd)".

When the "CTxR (grnd)" value is selected, the measured bank neutral point voltage is shifted by 90° lagging to compensate for the angular difference between the bus neutral voltage and the voltage derived from the bank neutral point current. Choose the value of resistor R so the voltage measured by the auxiliary input of the relay matches bus V0 during system faults (for example, an SLG fault at the bus). This is accomplished by the following condition:

$$\frac{3V0_{BUS}}{n_{BUS_VT}} - \frac{3I0_{NTRL} \times R \times n_{NTRL_VT}}{n_{NTRL_CT} \times n_{BUS_VT}} = 0 \qquad \textbf{Eq. 5-21}$$

where

$V0_{BUS}$ is the bus primary zero-sequence voltage during system fault

$3I0_{NTRL}$ is the primary current in the bank neutral during system fault

n_{BUS_VT} is the bus VT ratio set in the source selected by the **NTRL VOL UNBAL 1 BUS SOURCE** setting

n_{NTRL_VT} is a neutral point VT ratio set in the source selected by the **NTRL VOL UNBAL 1 NTRL SOURCE** setting. If R can be chosen precisely, then n_{NTRL_VT} can be set same as n_{BUS_VT}. If R cannot be chosen precisely, then n_{NTRL_VT} is used to match zero-sequence voltage as per the equation above.

n_{NTRL_CT} is the CT ratio in the bank neutral

NTRL VOL UNBAL 1 AB RATIO — This setting compensates for the bank inherent unbalance. Physically this value is a ratio of the reactance in phase A divided by the reactance in phase B. Auto-setting procedure is available under the Commands menu to calculate this value automatically. When tuning this setting manually, after bank repairs, this ratio shall be increased or decreased from the nominal value of 1.00 depending on whether the A or B phase got affected by failures or repairs and whether a given reactance increased or decreased as a result of the failure or repair. Use this setting only when the **NTRL VOL UNBAL 1 BUS 3V0** setting is set as "Calculated."

NTRL VOL UNBAL 1 AC RATIO — Compensates for the bank inherent unbalance. Physically this value is a ratio of the reactance in phase A divided by the reactance in phase C. Auto-setting procedure is available under the Commands menu to calculate this value automatically. When tuning this setting manually, after bank repairs, this ratio shall be increased or decreased from the nominal value of 1.00 depending on whether the A or C phase got affected by failures or repairs and whether a given reactance increased or decreased as a result of the failure or repair. Use this setting only when the **NTRL VOL UNBAL 1 BUS 3V0** setting is set as "Calculated".

NTRL VOL UNBAL 1 STG 1 PKP to **NTRL VOL UNBAL 1 STG 1 PKP** — Specify pickup thresholds for stages 1 through 4 of the function in per-units (pu) of the nominal value of the neutral-point VT (the auxiliary channel of the neutral source).

NTRL VOL UNBAL 1 STG 1 SLOPE to **NTRL VOL UNBAL 1 STG 4 SLOPE** — Specify the slopes of the operating characteristic. Neglecting compensation for the inherent bank unbalance, the operating signal is a vectorial difference between the neutral point voltage and the zero-sequence bus voltage. Therefore, the optimum restraining signal is a vectorial sum of the two signals. During external ground faults, the two voltages are approximately in phase generating a large restraining signal being twice the zero-sequence voltage at the bus. A slope of few percent is typically sufficient to provide good security under large system unbalances. If a given stage is used with a time delay longer than the expected external fault duration, the slope may be reduced or eliminated. In general, the slope can be understood as a adaptive threshold, and the user is provided with three ways to control sensitivity and security: pickup, time delay and slope. See the Application of Settings chapter for information.

NTRL VOL UNBAL 1 STG 1 PKP DELAY to **NTRL VOL UNBAL 1 STG 4 PKP DELAY** — Specify the pickup time delays for each stage of alarming or tripping. Each of the four comparators (four stages) uses an individual pickup timer, but a common drop out time delay as specified by the next setting.

NTRL VOL UNBAL 1 DPO DELAY — Controls a drop out delay for the operate FlexLogic operands. Note that individual stages apply individually configurable pickup delays, but use this common drop out delay.

NTRL VOL 1 BLK STG1 to **NTRL VOL 1 BLK STG4** — These settings are used to block the function when required on a per-stage basis. At minimum this function shall be blocked when the bank is off-line, or else it will operate unnecessarily during external ground faults and/or natural system unbalance if set sensitive. Either breaker position or undercurrent indication via any available instantaneous overcurrent function, or a combination, may be used for blocking. Note that when unblocked, the function becomes operational after five cycles of intentional delay. Optionally only the sensitive stages are blocked, and one stage set high enough to ride through possible problems is left operational. This stage can be used for abnormal conditions such as a failure of one pole of the breaker to close. The function becomes blocked if all four blocking inputs are asserted. The individual blocking inputs inhibit the associated stages of the function.

Figure 5-144: Neutral voltage unbalance logic

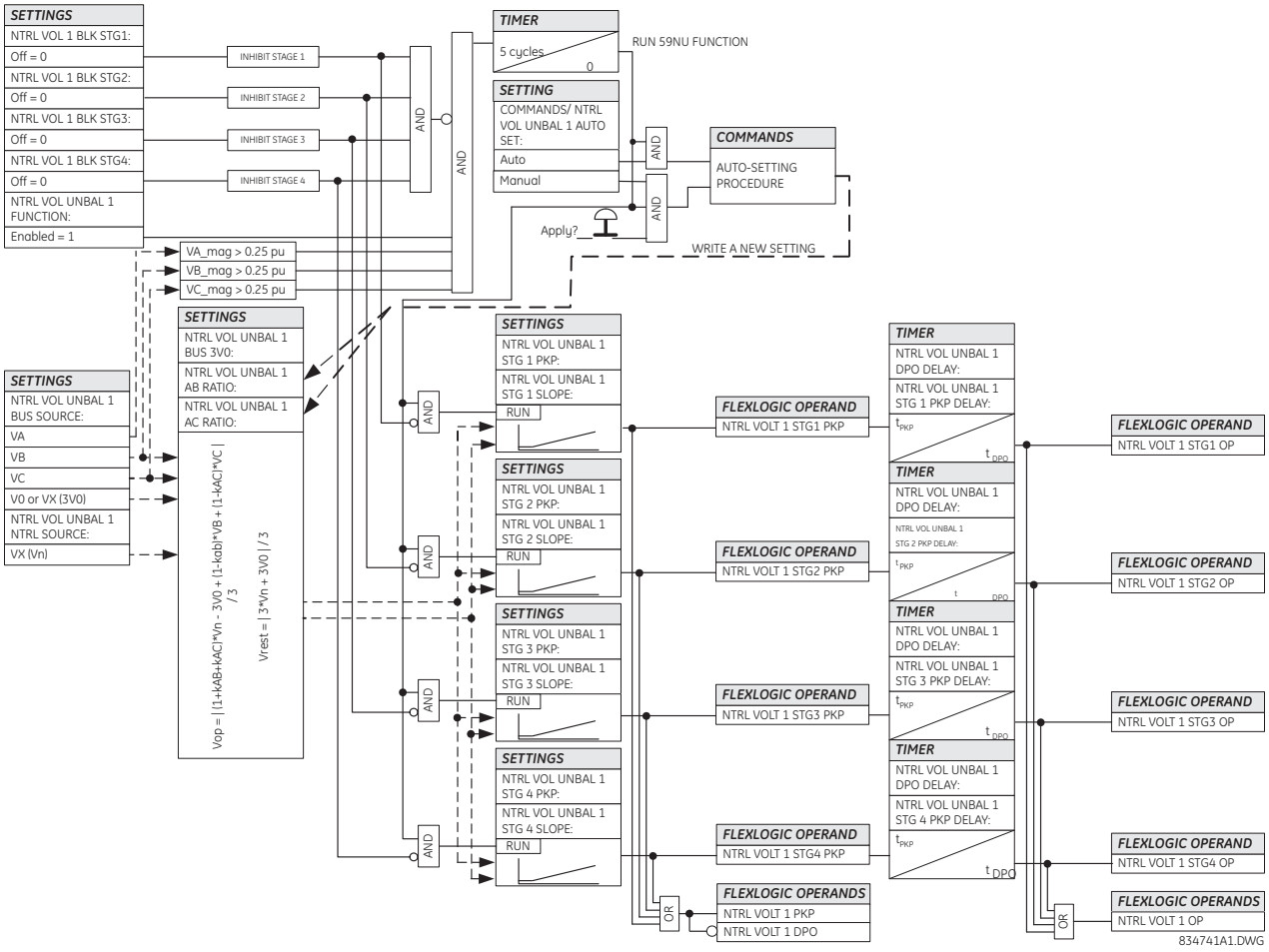

5.9 Control elements

5.9.1 Overview

Control elements are used for control rather than protection. See the Introduction to Elements section at the beginning of this chapter for information.

5.9.2 Trip bus

SETTINGS ⇨⇩ CONTROL ELEMENTS ⇨ TRIP BUS ⇨⇩ TRIP BUS 1(6)

■ **TRIP BUS 1** ■	⇔	**TRIP BUS 1 FUNCTION: Disabled**	Range: Enabled, Disabled
	⇕	**TRIP BUS 1 BLOCK: Off**	Range: FlexLogic operand
	⇕	**TRIP BUS 1 PICKUP DELAY: 0.00 s**	Range: 0.00 to 600.00 s in steps of 0.01
	⇕	**TRIP BUS 1 RESET DELAY: 0.00 s**	Range: 0.00 to 600.00 s in steps of 0.01

⇕	**TRIP BUS 1 INPUT 1: Off**	Range: FlexLogic operand
⇕	**TRIP BUS 1 INPUT 16: Off**	Range: FlexLogic operand
⇕	**TRIP BUS 1 LATCHING: Disabled**	Range: Enabled, Disabled
⇕	**TRIP BUS 1 RESET: Off**	Range: FlexLogic operand
⇕	**TRIP BUS 1: TARGET: Self-reset**	Range: Self-reset, Latched, Disabled
⇧	**TRIP BUS 1 EVENTS: Disabled**	Range: Enabled, Disabled

The trip bus element allows aggregating outputs of protection and control elements without using FlexLogic and assigning them a simple and effective manner. Each trip bus can be assigned for either trip or alarm actions. Simple trip conditioning such as latch, delay, and seal-in delay are available.

The easiest way to assign element outputs to a trip bus is through the EnerVista software under **Settings > Protection Summary**. Navigate to a specific protection or control protection element and check the bus box by hovering over the blank check box and selecting an option that displays. Once the required element is selected for a specific bus, a list of element operate-type operands are displayed and can be assigned to a trip bus. If more than one operate-type operand is required, it can be assigned directly from the trip bus menu.

5

Figure 5-145: Trip bus fields in the protection summary

Protection Summary // Quick Connect: Quick Connect Device: Settings

Save | Restore | Default | Reset | VIEW ALL mode

GROUPED ELEMENTS	TB1	TB2	TB3	TB4	TB5		GROUP 1	GROUP 2	GROUP 3	GROUP 4	GROUP 5	GROUP 6
Current Differential	☐	☐	☐	☐	☐	☐	Disabled	Disabled	Disabled	Disabled	Disabled	Disabled
Stub Bus	☐	☐	☐	☐	☐	☐	Disabled	Disabled	Disabled	Disabled	Disabled	Disabled
Line Pickup	☐	☐	☐	☐	☐	☐	Disabled	Disabled	Disabled	Disabled	Disabled	Disabled
Phase Distance Z 1	☐	☐	☐	☐	☐	☐	Disabled	Disabled	Disabled	Disabled	Disabled	Disabled
Phase Distance Z 2	☐	☐	☐	☐	☐	☐	Disabled	Disabled	Disabled	Disabled	Disabled	Disabled
Phase Distance Z 3	☐	☐	☐	☐	☐	☐	Disabled	Disabled	Disabled	Disabled	Disabled	Disabled
Ground Distance Z 1	☐	☐	☐	☐	☐	☐	Disabled	Disabled	Disabled	Disabled	Disabled	Disabled
Ground Distance Z 2	☐	☐	☐	☐	☐	☐	Disabled	Disabled	Disabled	Disabled	Disabled	Disabled
Ground Distance Z 3	☐	☐	☐	☐	☐	☐	Disabled	Disabled	Disabled	Disabled	Disabled	Disabled
Power Swing	☐	☐	☐	☐	☐	☐	Disabled	Disabled	Disabled	Disabled	Disabled	Disabled
Load Encroachment	☐	☐	☐	☐	☐	☐	Disabled	Disabled	Disabled	Disabled	Disabled	Disabled
Phase TOC 1	☐	☐	☐	☐	☐	☐	Disabled	Disabled	Disabled	Disabled	Disabled	Disabled
Phase TOC 2	☐	☐	☐	☐	☐	☐	Disabled	Disabled	Disabled	Disabled	Disabled	Disabled
Phase TOC 3	☐	☐	☐	☐	☐	☐	Disabled	Disabled	Disabled	Disabled	Disabled	Disabled
Phase TOC 4	☐	☐	☐	☐	☐	☐	Disabled	Disabled	Disabled	Disabled	Disabled	Disabled

Quick Connect Device

The following settings are available.

TRIP BUS 1 BLOCK — The trip bus output is blocked when the operand assigned to this setting is asserted.

TRIP BUS 1 PICKUP DELAY — This setting specifies a time delay to produce an output depending on how output is used.

TRIP BUS 1 RESET DELAY — This setting specifies a time delay to reset an output command. Set the time delay long enough to allow the breaker or contactor to perform a required action.

TRIP BUS 1 INPUT 1 to **TRIP BUS 1 INPUT 16** — These settings select a FlexLogic operand to be assigned as an input to the trip bus.

TRIP BUS 1 LATCHING — This setting enables or disables latching of the trip bus output. This is typically used when lockout is required or user acknowledgement of the relay response is required.

TRIP BUS 1 RESET — The trip bus output is reset when the operand assigned to this setting is asserted. Note that the RESET OP operand is pre-wired to the reset gate of the latch, As such, a reset command from the front panel interface or via communications resets the trip bus output.

Figure 5-146: Trip bus logic

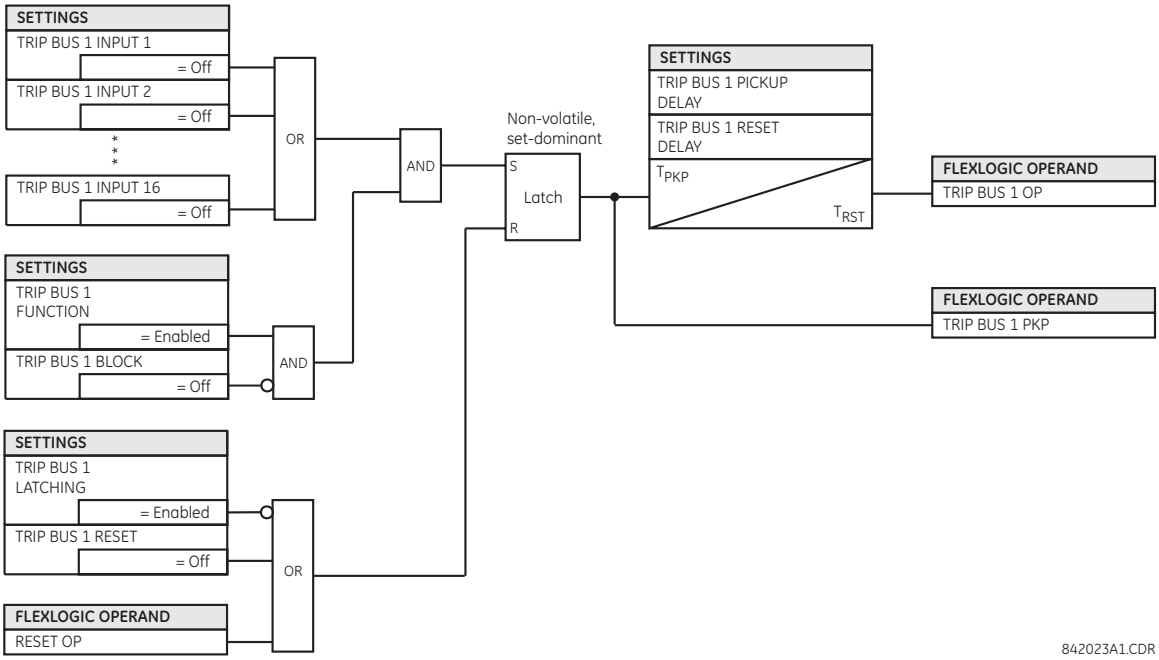

5.9.3 Setting groups

SETTINGS ⇨⇩ CONTROL ELEMENTS ⇨ SETTING GROUPS

■ **SETTING GROUPS** ■	⇔	**SETTING GROUPS FUNCTION: Disabled**	Range: Disabled, Enabled
	⇩	**Control Mode: Local**	Range: Local, IEC61850 Client
	⇩	**SETTING GROUPS BLK: Off**	Range: FlexLogic operand
	⇩	**GROUP 2 ACTIVATE ON: Off**	Range: FlexLogic operand
		⇩	
	⇩	**GROUP 6 ACTIVATE ON: Off**	Range: FlexLogic operand
	⇩	**GROUP 1 NAME:**	Range: up to 16 alphanumeric characters
		⇩	
	⇩	**GROUP 6 NAME:**	Range: up to 16 alphanumeric characters
	⇩	**SETTING GROUP EVENTS: Disabled**	Range: Disabled, Enabled

The setting groups menu controls the activation and deactivation of up to six groups of settings in the **GROUPED ELEMENTS** settings menu. The active setting group can be indicated on the front display of the C70 by configuring User-Programmable LEDs to display the state of the SETTING GROUP ACT FlexLogic operands.

On a setting group change, protection elements are blocked temporarily to allow the relay to re-initialize with the new settings. The duration of the block depends on relay configuration and can last up to four cycles. The actual block duration on the group switching can be verified by the PROTSUPV operand.

SETTING GROUPS FUNCTION — When Enabled, allows setting groups other than group 1 (the default active group) to be activated. When Disabled, the default setting group is forced active. When changed from Disabled to Enabled, it resets the active setting group to 1 independent of the **Control Mode** setting.

Control Mode — This setting displays when IEC 61850 is used by the C70. It selects the active setting group selection control mode. When set to "Local," active setting group selection is based on the FlexLogic operand states selected by **GROUP ACTIVATE ON** settings and the SelectActiveSG request from an IEC 61850 client generates a negative response. When set to "IEC61850 Client," the SelectActiveSG request from an IEC 61850 client selects the active setting group and the FlexLogic operand states of the **GROUP ACTIVATE ON** settings are ignored/not used.

The logic diagram shows the active setting group selection behavior based on the **Control Mode** setting.

When the **Control Mode** is "Local," the priority scheme makes active the highest numbered group selected by the **GROUP ACTIVATE ON** settings. The most recent active group selection is preserved while the C70 is powered down or reset.

When the **Control Mode** is "IEC61850 Client," the SelectActiveSG selection has an initial value that can be set on a CID file download by the IEC 61850 setting Initial Setting Group. See the **Settings > Product Setup > Communications > IEC 61850 protocol > Setting Groups** section earlier for details. The most recent SelectActiveSG selection is preserved while the C70 is powered down or reset. If it becomes necessary to cancel the SelectActiveSG selection without using a SelectActiveSG service request, change the **SETTING GROUPS FUNCTION** setting to Disabled. This resets the SelectActiveSG selection to 1.

When the **Control Mode** is changed, the current active setting group selection is preserved.

Figure 5-147: Logic diagram for Control Mode setting

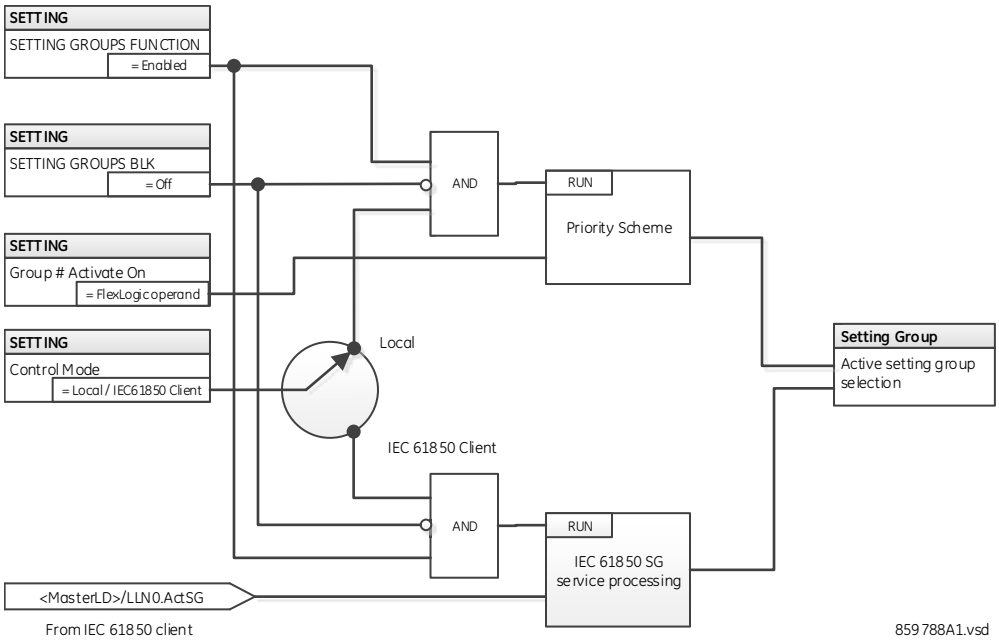

NOTE

Active setting group selection can be made either by IEC 61850 MMS SelectActiveSG service or Local by the FlexLogic operand states selected by **GROUP # ACTIVATE ON** settings. Simultaneous setting group control is not permissible.

SETTING GROUPS BLK — Prevents the active setting group from changing when the selected FlexLogic operand is "On." This can be useful in applications where it is undesirable to change the settings under certain conditions, such as during a control sequence.

GROUP 2 ACTIVATE ON to **GROUP 6 ACTIVATE ON** — Selects a FlexLogic operand which, when set, makes the particular setting group active for use by any grouped element. A priority scheme ensures that only one group is active at a given time — the highest-numbered group that is activated by its **ACTIVATE ON** parameter takes priority over the lower-numbered groups. There is no activate on setting for group 1 (the default active group), because group 1 automatically becomes active if no other group is active.

The settings are read-only with default values when the **Control Mode** setting is set to "IEC61850 Client."

A setting group selection can also be made by the IEC 61850 MMS service SelectActiveSG to the control block @Master/LLN0.SGCB. An active group selection can be done either by SelectActiveSG service from a IEC 61850 client or by **GROUP ACTIVATE ON** settings, but mixed operation is not allowed.

An initial setting group value is initialized to the **GROUP ACTIVATE ON** setting value on C70 reboot immediately following the receipt of a valid CID file.

SETTING GROUP 1 NAME to **SETTING GROUP 6 NAME** — Allows the user to assign a name to each of the six settings groups. Once programmed, this name appears on the second line of the **GROUPED ELEMENTS ⇨ SETTING GROUP 1(6)** menu display.

The relay can be set up via a FlexLogic equation to receive requests to activate or de-activate a particular non-default settings group. The following FlexLogic equation (see the following figure) illustrates requests via remote communications (for example, VIRTUAL INPUT 1 ON) or from a local contact input (for example, CONTACT IP 1 ON) to initiate the use of a particular settings group, and requests from several overcurrent pickup measuring elements to inhibit the use of the particular settings group. The assigned VIRTUAL OUTPUT 1 operand is used to control the "On" state of a particular settings group.

Figure 5-148: Example of FlexLogic control of a setting group

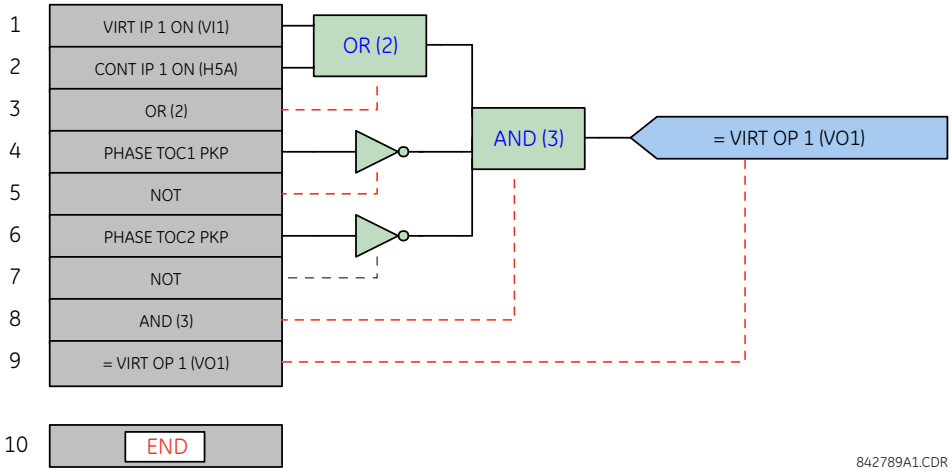

5.9.4 Selector switch

SETTINGS ⇨⇩ CONTROL ELEMENTS ⇨ SELECTOR SWITCH ⇨ SELECTOR SWITCH 1(2)

■ **SELECTOR SWITCH 1** ■	⇔	**SELECTOR 1 FUNCTION:** **Disabled**	Range: Disabled, Enabled
	⇩	**SELECTOR 1 FULL** **RANGE: 7**	Range: 1 to 7 in steps of 1
	⇩	**SELECTOR 1 TIME-OUT:** **5.0 s**	Range: 3.0 to 60.0 s in steps of 0.1
	⇩	**SELECTOR 1 STEP-UP:** **Off**	Range: FlexLogic operand
	⇩	**SELECTOR 1 STEP-UP** **MODE: Time-out**	Range: Time-out, Acknowledge

⇕	**SELECTOR 1 ACK: Off**	Range: FlexLogic operand
⇕	**SELECTOR 1 3BIT A0: Off**	Range: FlexLogic operand
⇕	**SELECTOR 1 3BIT A1: Off**	Range: FlexLogic operand
⇕	**SELECTOR 1 3BIT A2: Off**	Range: FlexLogic operand
⇕	**SELECTOR 1 3BIT MODE: Time-out**	Range: Time-out, Acknowledge
⇕	**SELECTOR 1 3BIT ACK: Off**	Range: FlexLogic operand
⇕	**SELECTOR 1 POWER-UP MODE: Restore**	Range: Restore, Synchronize, Sync/Restore
⇕	**SELECTOR 1 TARGETS: Self-reset**	Range: Self-reset, Latched, Disabled
⇧	**SELECTOR 1 EVENTS: Disabled**	Range: Disabled, Enabled

The selector switch element is intended to replace a mechanical selector switch. Typical applications include setting group control or control of multiple logic sub-circuits in user-programmable logic.

The element provides for two control inputs. The step-up control allows stepping through selector position one step at a time with each pulse of the control input, such as a user-programmable pushbutton. The three-bit control input allows setting the selector to the position defined by a three-bit word.

The element allows pre-selecting a new position without applying it. The pre-selected position gets applied either after time-out or upon acknowledgement via separate inputs (user setting). The selector position is stored in non-volatile memory. Upon power-up, either the previous position is restored or the relay synchronizes to the current three-bit word (user setting). Basic alarm functionality alerts the user under abnormal conditions; for example, the three-bit control input being out of range.

A selector switch runs every two power cycles.

SELECTOR 1 FULL RANGE — This setting defines the upper position of the selector. When stepping up through available positions of the selector, the upper position wraps up to the lower position (position 1). When using a direct three-bit control word for programming the selector to a desired position, the change would take place only if the control word is within the range of 1 to the **SELECTOR FULL RANGE**. If the control word is outside the range, an alarm is established by setting the SELECTOR ALARM FlexLogic operand for three seconds.

SELECTOR 1 TIME-OUT — This setting defines the time-out period for the selector. This value is used by the relay in the following two ways. When the **SELECTOR STEP-UP MODE** is "Time-out," the setting specifies the required period of inactivity of the control input after which the pre-selected position is automatically applied. When the **SELECTOR STEP-UP MODE** is "Acknowledge," the setting specifies the period of time for the acknowledging input to appear. The timer is re-started by any activity of the control input. The acknowledging input must come before the **SELECTOR 1 TIME-OUT** timer expires; otherwise, the change does not take place and an alarm is set.

SELECTOR 1 STEP-UP — This setting specifies a control input for the selector switch. The switch is shifted to a new position at each rising edge of this signal. The position changes incrementally, wrapping up from the last (**SELECTOR 1 FULL RANGE**) to the first (position 1). Consecutive pulses of this control operand must not occur faster than every 50 ms. After each rising edge of the assigned operand, the time-out timer is restarted and the SELECTOR SWITCH 1: POS Z CHNG INITIATED target message is displayed, where Z the pre-selected position. The message is displayed for the time specified by the **FLASH MESSAGE TIME** setting. The pre-selected position is applied after the selector times out ("Time-out" mode), or when the acknowledging signal appears before the element times out ("Acknowledge" mode). When the new position is applied, the relay displays the SELECTOR SWITCH 1: POSITION Z IN USE message. Typically, a user-programmable pushbutton is configured as the stepping up control input.

SELECTOR 1 STEP-UP MODE — This setting defines the selector mode of operation. When set to "Time-out," the selector changes its position after a pre-defined period of inactivity at the control input. The change is automatic and does not require any explicit confirmation of the intent to change the selector's position. When set to "Acknowledge," the selector changes its position only after the intent is confirmed through a separate acknowledging signal. If the acknowledging signal does not appear within a pre-defined period of time, the selector does not accept the change and an alarm is established by setting the SELECTOR STP ALARM output FlexLogic operand for three seconds.

SELECTOR 1 ACK — This setting specifies an acknowledging input for the stepping up control input. The pre-selected position is applied on the rising edge of the assigned operand. This setting is active only under "Acknowledge" mode of operation. The acknowledging signal must appear within the time defined by the **SELECTOR 1 TIME-OUT** setting after the last activity of the control input. A user-programmable pushbutton is typically configured as the acknowledging input.

SELECTOR 1 3BIT A0, **A1**, and **A2** — These settings specify a three-bit control input of the selector. The three-bit control word pre-selects the position using the following encoding convention:

A2	A1	A0	Position
0	0	0	rest
0	0	1	1
0	1	0	2
0	1	1	3
1	0	0	4
1	0	1	5
1	1	0	6
1	1	1	7

The "rest" position (0, 0, 0) does not generate an action and is intended for situations when the device generating the three-bit control word is having a problem. When **SELECTOR 1 3BIT MODE** is "Time-out," the pre-selected position is applied in **SELECTOR 1 TIME-OUT** seconds after the last activity of the three-bit input. When **SELECTOR 1 3BIT MODE** is "Acknowledge," the pre-selected position is applied on the rising edge of the **SELECTOR 1 3BIT ACK** acknowledging input.

The stepping up control input (**SELECTOR 1 STEP-UP**) and the three-bit control inputs (**SELECTOR 1 3BIT A0** through **A2**) lock-out mutually: once the stepping up sequence is initiated, the three-bit control input is inactive; once the three-bit control sequence is initiated, the stepping up input is inactive.

SELECTOR 1 3BIT MODE — This setting defines the selector mode of operation. When set to "Time-out," the selector changes its position after a pre-defined period of inactivity at the control input. The change is automatic and does not require explicit confirmation to change the selector position. When set to "Acknowledge," the selector changes its position only after confirmation via a separate acknowledging signal. If the acknowledging signal does not appear within a pre-defined period of time, the selector rejects the change and an alarm established by invoking the SELECTOR BIT ALARM FlexLogic operand for three seconds.

SELECTOR 1 3BIT ACK — This setting specifies an acknowledging input for the three-bit control input. The pre-selected position is applied on the rising edge of the assigned FlexLogic operand. This setting is active only under the "Acknowledge" mode of operation. The acknowledging signal must appear within the time defined by the **SELECTOR TIME-OUT** setting after the last activity of the three-bit control inputs. Note that the stepping up control input and three-bit control input have independent acknowledging signals (**SELECTOR 1 ACK** and **SELECTOR 1 3BIT ACK**, accordingly).

SELECTOR 1 POWER-UP MODE — This setting specifies the element behavior on power up of the relay.

When set to "Restore," the last position of the selector (stored in the non-volatile memory) is restored after powering up the relay. If the position restored from memory is out of range, position 0 (no output operand selected) is applied and an alarm is set (**SELECTOR 1 PWR ALARM**).

When set to "Synchronize," the selector switch acts as follows. For two power cycles, the selector applies position 0 to the switch and activates **SELECTOR 1 PWR ALARM**. After two power cycles expire, the selector synchronizes to the position dictated by the three-bit control input. This operation does not wait for time-out or the acknowledging input. When the synchronization attempt is unsuccessful (that is, the three-bit input is not available (0,0,0) or out of range), then the selector switch output is set to position 0 (no output operand selected) and an alarm is established (**SELECTOR 1 PWR ALARM**).

The operation of "Synch/Restore" mode is similar to the "Synchronize" mode. The only difference is that after an unsuccessful synchronization attempt, the switch attempts to restore the position stored in the relay memory. The "Synch/Restore" mode is useful for applications where the selector switch is employed to change the setting group in redundant (two relay) protection schemes.

SELECTOR 1 EVENTS — If enabled, the following events are logged:

Event name	Description
SELECTOR 1 POS Z	Selector 1 changed its position to Z
SELECTOR 1 STP ALARM	The selector position pre-selected via the stepping up control input has not been confirmed before the time out
SELECTOR 1 BIT ALARM	The selector position pre-selected via the three-bit control input has not been confirmed before the time out

The following figures illustrate the operation of the selector switch. In these diagrams, "T" represents a time-out setting.

Figure 5-149: Time-out mode

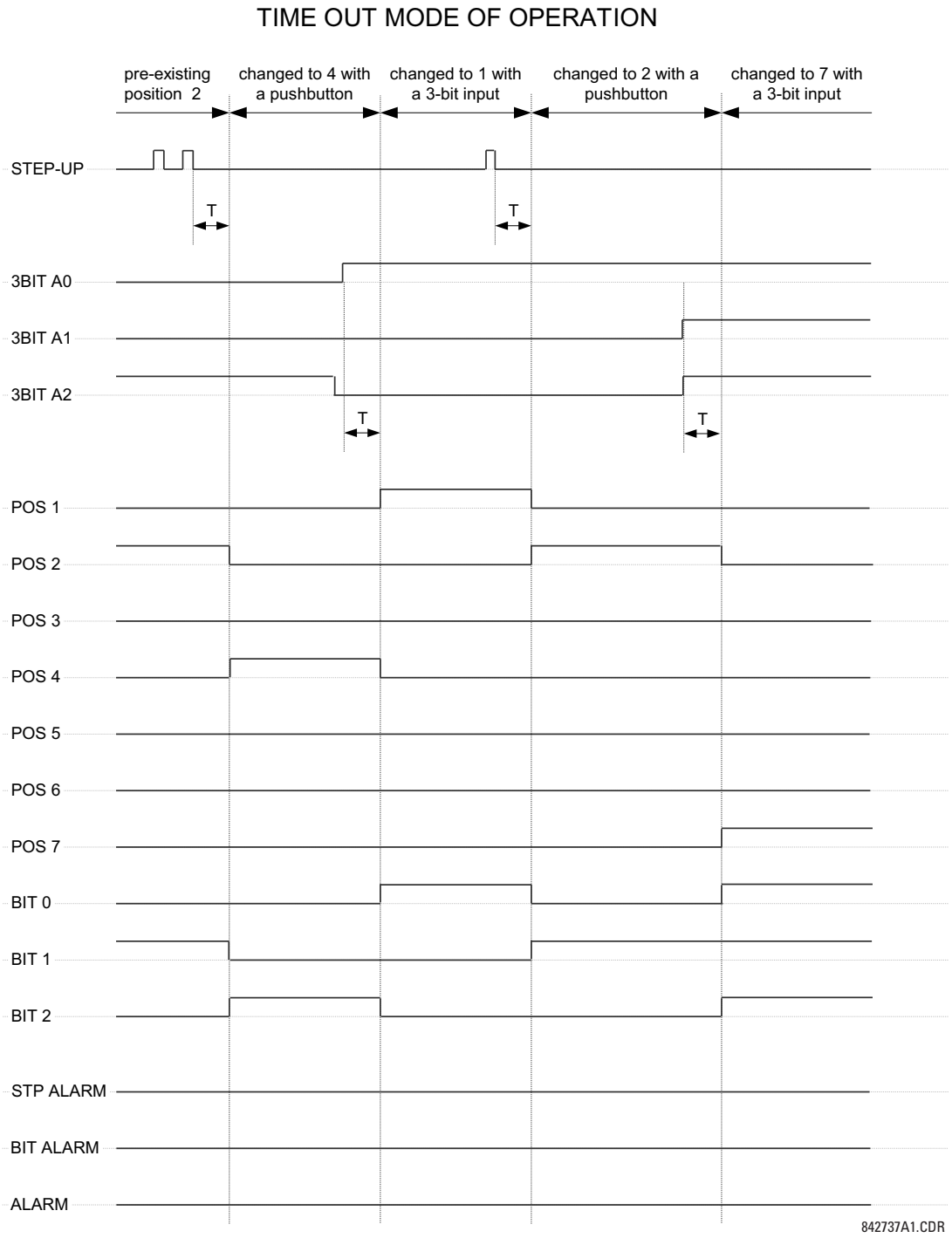

Figure 5-150: Acknowledge mode

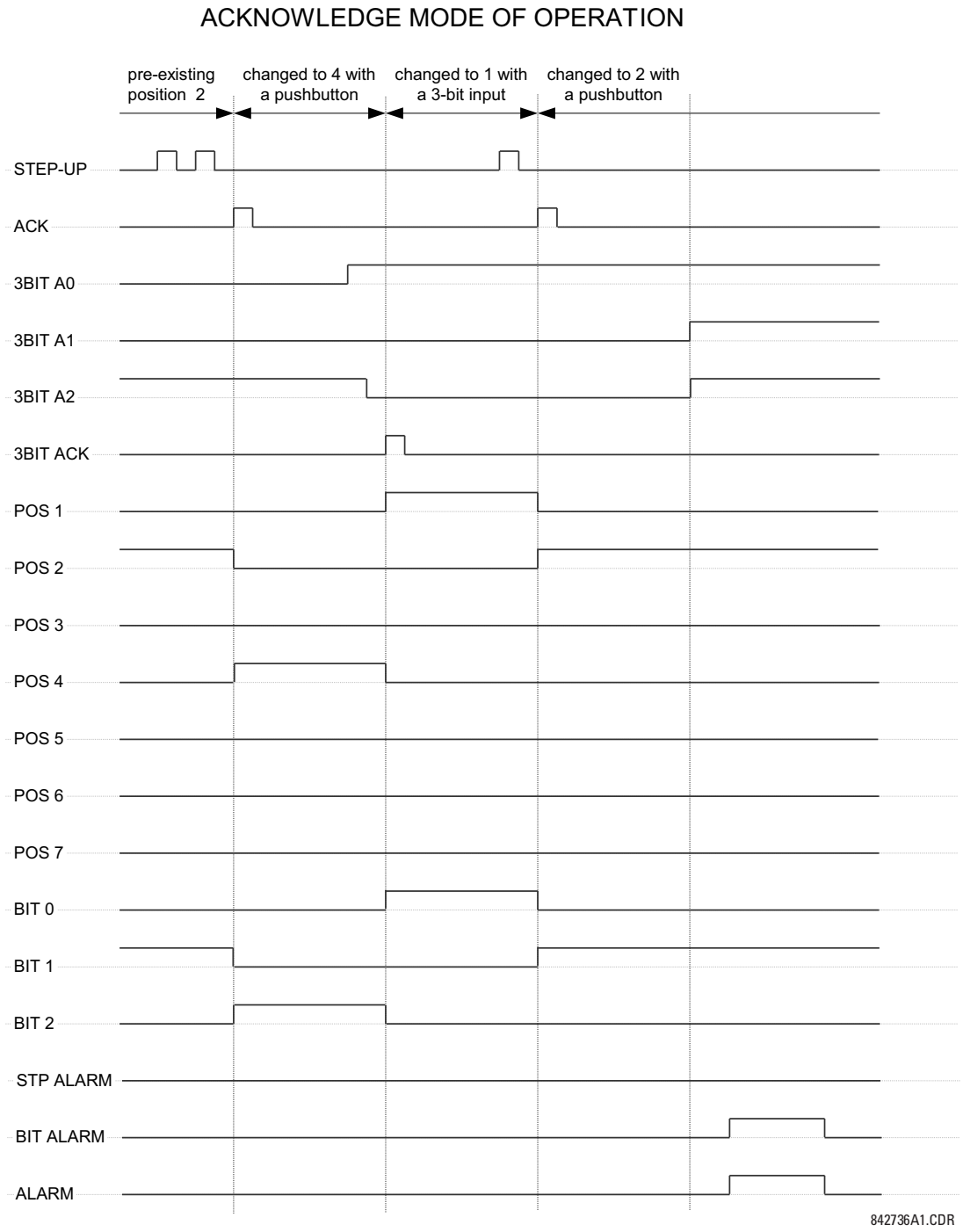

Application example

Consider an application where the selector switch is used to control setting groups 1 through 4 in the relay. The setting groups are to be controlled from both user-programmable pushbutton 1 and from an external device via contact inputs 1 through 3. The active setting group is to be available as an encoded three-bit word to the external device and SCADA via output contacts 1 through 3. The pre-selected setting group is to be applied automatically after five seconds of inactivity of the control inputs. When the relay powers up, it is to synchronize the setting group to the three-bit control input.

Make the following changes to setting group control in the **SETTINGS ⇨⇩ CONTROL ELEMENTS ⇨ SETTING GROUPS** menu:

FUNCTION: "Enabled"
Block: "Off"
GROUP 2 ACTIVATE ON: "SELECTOR 1 POS 2"
GROUP 3 ACTIVATE ON: "SELECTOR 1 POS 3"
GROUP 4 ACTIVATE ON: "SELECTOR 1 POS 4"
GROUP 5 ACTIVATE ON: "Off"
GROUP 6 ACTIVATE ON: "Off"

Make the following changes to selector switch element in the **SETTINGS ⇨⇩ CONTROL ELEMENTS ⇨⇩ SELECTOR SWITCH ⇨ SELECTOR SWITCH 1** menu to assign control to user programmable pushbutton 1 and contact inputs 1 through 3:

SELECTOR 1 FUNCTION: "Enabled"
SELECTOR 1 FULL-RANGE: "4"
SELECTOR 1 STEP-UP MODE: "Time-out"
SELECTOR 1 TIME-OUT: "5.0 s"
SELECTOR 1 STEP-UP: "PUSHBUTTON 1 ON"
SELECTOR 1 ACK: "Off"
SELECTOR 1 3BIT A0: "CONT IP 1 ON"
SELECTOR 1 3BIT A1: "CONT IP 2 ON"
SELECTOR 1 3BIT A2: "CONT IP 3 ON"
SELECTOR 1 3BIT MODE: "Time-out"
SELECTOR 1 3BIT ACK: "Off"
SELECTOR 1 POWER-UP MODE: "Synchronize"

Now, assign the contact output operation (assume the H6E module) to the selector switch element by making the following changes in the **SETTINGS ⇨⇩ INPUTS/OUTPUTS ⇨⇩ CONTACT OUTPUTS** menu:

OUTPUT H1 OPERATE: "SELECTOR 1 BIT 0"
OUTPUT H2 OPERATE: "SELECTOR 1 BIT 1"
OUTPUT H3 OPERATE: "SELECTOR 1 BIT 2"

Finally, assign configure user-programmable pushbutton 1 by making the following changes in the **SETTINGS ⇨ PRODUCT SETUP ⇨⇩ USER-PROGRAMMABLE PUSHBUTTONS ⇨ USER PUSHBUTTON 1** menu:

PUSHBUTTON 1 FUNCTION: "Self-reset"
PUSHBUTTON 1 DROP-OUT TIME: "0.10 s"

The figure shows the logic for the selector switch.

Figure 5-151: Selector switch logic

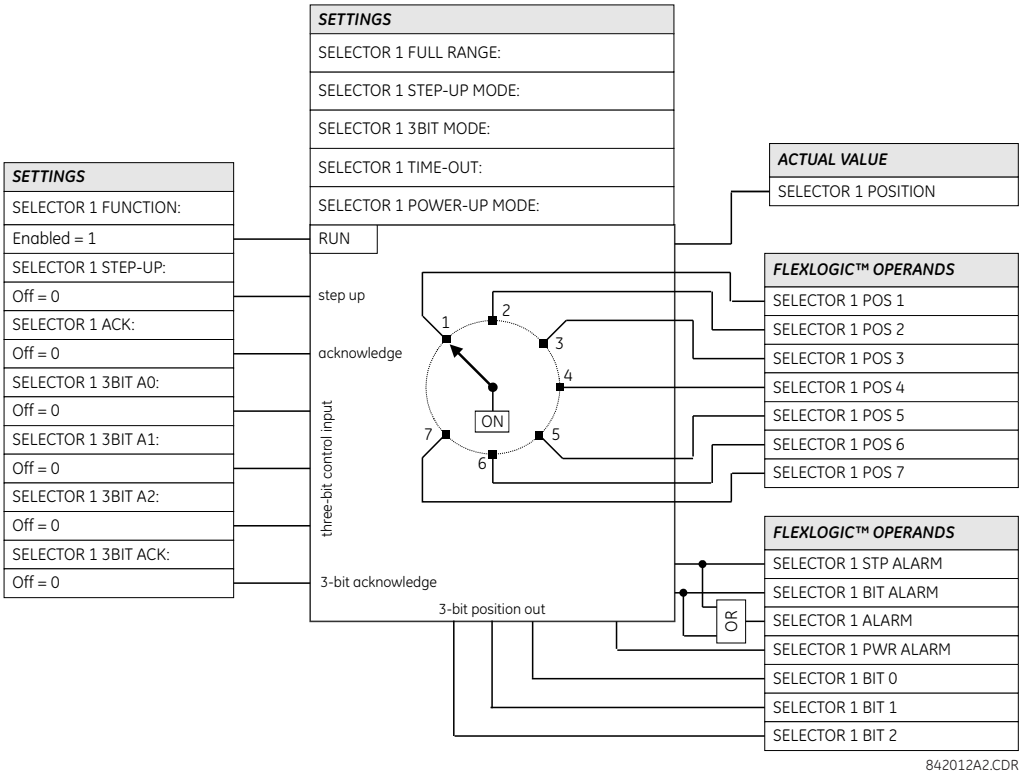

5.9.5 Capacitor control

SETTINGS ⇨⇩ CONTROL ELEMENTS ⇨⇩ CAPACITOR CONTROL ⇨ CAP 1(3) CONTROL

■ CAP 1 CONTROL ■	⇔	CAP 1 CTRL FUNCTION: Disabled	Range: Disabled, Enabled
	⇕	CAP 1 SET REMOTE 1: Off	Range: FlexLogic operand
	⇕	CAP 1 SET REMOTE 2: Off	Range: FlexLogic operand
	⇕	CAP 1 SET LOCAL 1: Off	Range: FlexLogic operand
	⇕	CAP 1 SET LOCAL 2: Off	Range: FlexLogic operand
	⇕	CAP 1 RMT CTRL EN: Off	Range: FlexLogic operand
	⇕	CAP 1 LCL CTRL EN: Off	Range: FlexLogic operand
	⇕	CAP 1 RMT SET AUTO: Off	Range: FlexLogic operand
	⇕	CAP 1 LCL SET AUTO: Off	Range: FlexLogic operand
	⇕	CAP 1 RMT SET MAN: Off	Range: FlexLogic operand

CAP 1 LCL SET MAN: Off	Range:	FlexLogic operand
CAP 1 TRIP 1: Off	Range:	FlexLogic operand
⇩		
CAP 1 TRIP 6: Off	Range:	FlexLogic operand
CAP 1 SWITCH TO MANUAL ON TRIP: Yes	Range:	Yes, No
CAP 1 AUTO CTRL EN: Off	Range:	FlexLogic operand
CAP 1 LOCAL OPEN: Off	Range:	FlexLogic operand
CAP 1 AUTO OPEN: Off	Range:	FlexLogic operand
CAP 1 BKR OPEN 52b: Off	Range:	FlexLogic operand
CAP 1 TRIP SEAL-IN DELAY: 0.400 s	Range:	0.000 to 60.000 s in steps of 0.001
CAP 1 REMOTE CLOSE: Off	Range:	FlexLogic operand
CAP 1 LOCAL CLOSE: Off	Range:	FlexLogic operand
CAP 1 AUTO CLOSE: Off	Range:	FlexLogic operand
CAP 1 BKR CLSD 52a: Off	Range:	FlexLogic operand
CAP 1 DISCHARGE DELAY: 300 s	Range:	0 to 3600 s in steps of 1
CAP 1 CLOSE SEAL-IN DELAY: 0.400 s	Range:	0.000 to 60.000 s in steps of 0.001
CAP 1 BKR CLOSE BLK: Off	Range:	FlexLogic operand
CAP 1 CLS OVERRIDE: Off	Range:	FlexLogic operand
CAP 1 TARGETS: Self-reset	Range:	Self-reset, Latched, Disabled
CAP 1 EVENTS: Disabled	Range:	Disabled, Enabled

SOFTWARE OPTION

The C70 is provided with optional capacity bank control. This feature is specified as an option at the time of ordering. See the Order Codes section in chapter 2 for details.

The capacitor control element gathers on/off commands from various sources and executes them, while maintaining remote/local and auto/manual control rights. Local control refers to control from the front panel of the relay. Remote control refers to control via communications from outside of the relay, an on-site interface, and/or from an off-site control center. There is flexibility to support other configurations.

This element provides a user-programmable time delay that inhibits closing after the bank has been switched out of service until the bank has had time to discharge any trapped charge. If the capacitor were to be closed with trapped charge of opposite polarity from the system voltage at that instant, larger than normal transients would occur. A FlexAnalog value is available to inform the time remaining before the next permissible close operation.

Seal-in is provided to stretch short input commands to lengths suitable for breaker control. An interlock prevents simultaneous trip and close output, which can result in breaker pumping. To prevent a continuous close input from causing reclosing of the breaker following a trip command, the interlock is sealed-in for the duration of any close input.

A provision is provided to force the auto/manual mode to manual on protection operation. This prevents the capacitor automatic switching scheme from attempting to close a faulted capacitor. A setting controls the automatic switchover to manual upon the protection trip.

The following settings are available for each capacitor control element.

CAP 1 CTRL FUNCTION — This setting is used to enable the element. When disabled, the remote/local latch is forced to local, the auto/manual latch is forced to manual, the trip and close command outputs are forced off, and their seal-in latches and timers are reset.

CAP 1 SET REMOTE 1(2) — Sets one or two FlexLogic operands to select the remote mode. It is expected that one of these settings is programmed to a pushbutton "on" operand. This allows a local operator to hand over control to remote operators. Where appropriate, the other one of these settings can be set to a virtual input. This allows remote operators to grant themselves control rights.

CAP 1 SET LOCAL 1(2) — Similar to previous setting, but selects local mode.

CAP 1 RMT CTRL EN — Selects a FlexLogic operand to enable remote auto/manual and open/close control. It is expected to be set to CAP 1 IN REMOTE to obtain the baseline functionality, but variations via FlexLogic are possible. For example, if it is required that remote control is always available, this setting can be set to "On."

5

CAP 1 LCL CTRL EN — Similar to previous setting, but enables local controls. Expected to be set to CAP 1 IN LOCAL.

CAP 1 RMT SET AUTO — Selects a FlexLogic operand that selects auto mode when remote control is enabled. It is expected to be set to a virtual input to enables HMI/SCADA access via one of the supported protocols.

CAP 1 LCL SET AUTO — Similar to previous setting, but expected to be set to a pushbutton "on" operand.

CAP 1 RMT SET MAN — Similar to the **CAP RMT SET AUTO** setting, but selects manual mode.

CAP 1 LCL SET MAN — Similar to the **CAP LCL SET AUTO** setting, but selects manual mode.

CAP 1 TRIP 1(6) — Selects up to six FlexLogic operands to activate the CAP 1 BKR TRIP operand, no matter what control modes prevail. Expected to be set to the appropriate protection element operate operand.

CAP 1 SWITCH TO MANUAL ON TRIP — Allows control of the auto/manual mode when issuing a trip command. When set to "Yes," the element switches to manual mode upon tripping the bank from protection.

CAP 1 AUTO CTRL EN — Selects a FlexLogic operand to enable automatic open/close control. It is expected to be set to CAP 1 IN AUTO to obtain the baseline functionality, but variations are possible.

CAP 1 MAN CTRL EN — Similar to previous setting, but enables manual controls. Expected to be set to CAP 1 IN MAN.

CAP 1 REMOTE OPEN — Selects a FlexLogic operand to activate the CAP 1 BKR TRIP operand when both remote and manual control are enabled. It is expected to be set to a virtual input, and that the contact output wired to the capacitor breaker trip coil is set to CAP 1 BKR TRIP.

CAP 1 LOCAL OPEN — Similar to previous setting, but requires both local and manual control to be enabled. Expected to be set to a pushbutton "on" operand.

CAP 1 AUTO OPEN — Similar to previous setting, but requires automatic control to be enabled. Expected to be set to the open command of the voltage regulator either built-in or customer via FlexLogic.

CAP 1 BKR OPEN 52b — Selects a FlexLogic operand that cancels the trip seal-in. Expected to be set to the contact input to which a contact is wired that is closed when the capacitor breaker is open. When both 52a and 52b contacts are used for security, the appropriate filtering logic possibly including discrepancy alarming can be programmed in FlexLogic, and the resulting virtual output can be configured under this setting.

CAP 1 TRIP SEAL-IN DELAY — Sets a maximum trip seal-in duration for where the **CAP 1 BKR OPEN 52b** setting is not configured or fails to operate.

CAP 1 REMOTE CLOSE — Similar to the **CAP 1 REMOTE OPEN** setting, but closes the breaker.

CAP 1 LOCAL CLOSE — Similar to the **CAP 1 LOCAL OPEN** setting, but closes the breaker.

CAP 1 AUTO CLOSE — Similar to the **CAP 1 AUTO OPEN** setting, but closes the breaker.

CAP 1 BKR CLSD 52a — Similar to the **CAP 1 BKR OPEN 52b** setting, but cancels the close seal-in, and is expected to be set to a contact that is closed when the breaker is closed. The selected operand also triggers the **CAP 1 DISCHARGE TIME**. When both 52a and 52b contacts are used for security, the appropriate filtering logic possibly including discrepancy alarming can be programmed in FlexLogic, and the resulting virtual output can be configured under this setting.

CAP 1 CLOSE SEAL-IN DELAY — Sets a maximum close seal-in duration for where the **CAP BKR CLSD 52a** setting is not configured or fails to operate.

CAP 1 DISCHARGE TIME — Sets a time delay that inhibits closing after the bank has been switched out-of-service (the **CAP BKR CLSD 52a** setting goes low or trip command terminates) until the bank has had time to discharge any trapped charge. The correct value for this setting depends on the specifics of the capacitor installation.

CAP 1 BKR CLOSE BLK — Selects a FlexLogic operand that triggers the CAP 1 BKR CLOSE interlock logic. Its signal is expected to originate from capacitor breaker trips external to the relay, and thus not otherwise able to block relay closing (for example, from the opposite group's capacitor protection).

CAP 1 CLS OVERRIDE — Selects a FlexLogic operand that overrides all inhibits for the breaker close command and allows the CLOSE command to be issued from any source as per the logic diagram.

Figure 5-152: Capacitor bank control logic

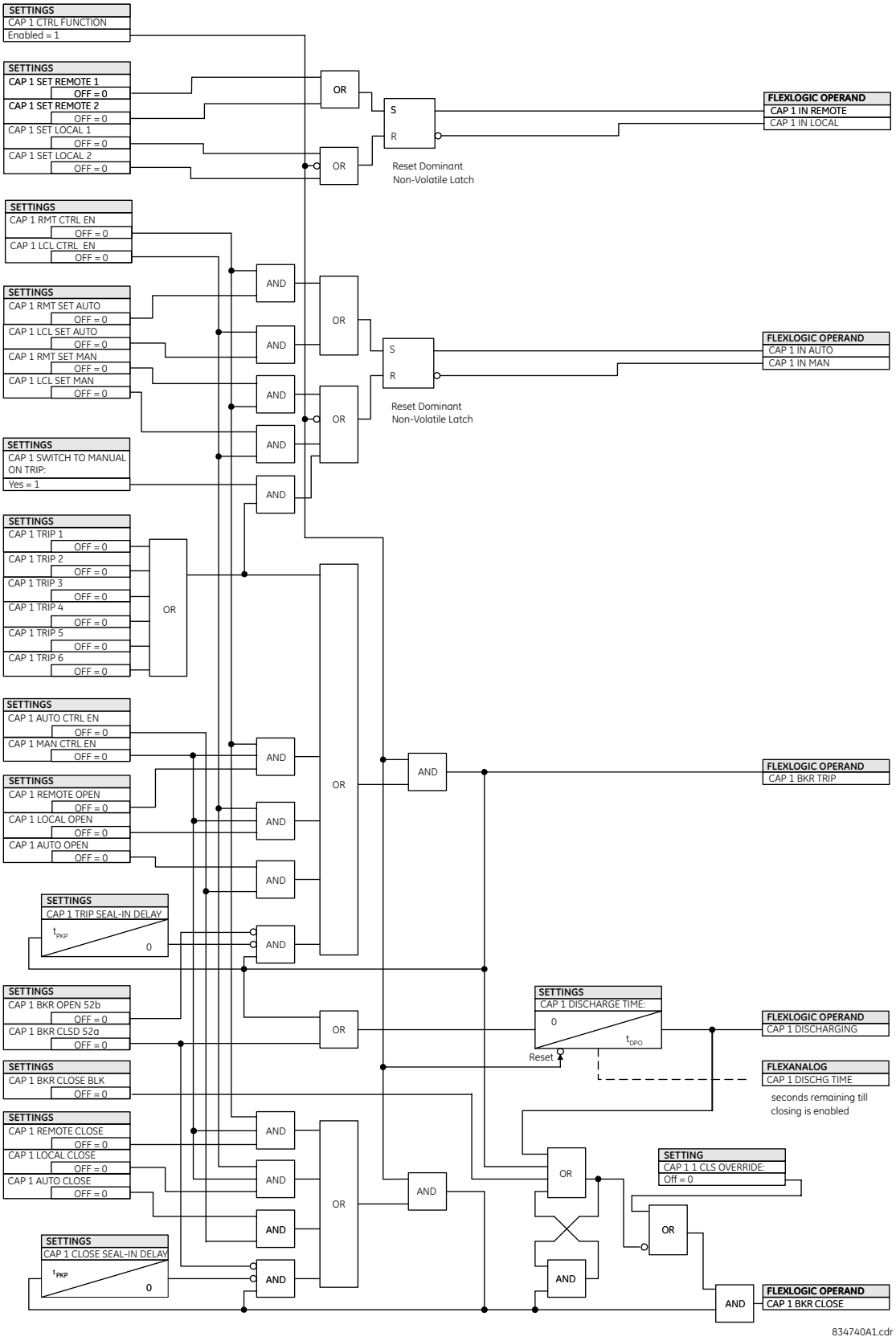

5.9.6 Time of day timers

SETTINGS ⇨⇩ CONTROL ELEMENTS ⇨⇩ TIME OF DAY TIMERS ⇨ TIME OF DAY TIMER1(5)

■ TIME OF DAY TIMER1 ■	⇔	TIME OF DAY TIMER1 FUNCTION: Disabled	Range: Disabled, Enabled
	⇩	TIME OF DAY TIMER1 START TIME: 00:00	Range: 00:00 to 23:59 in steps of 00:01
	⇩	TIME OF DAY TIMER1 STOP TIME: 23:59	Range: 00:00 to 23:59 in steps of 00:01
	⇩	TIME OF DAY TIMER1 TARGETS: Self-reset	Range: Self-reset, Latched, Disabled
	⇧	TIME OF DAY TIMER1 EVENTS: Disabled	Range: Disabled, Enabled

The time of day timer function provides the ability to program control actions based on real time. There are five identical timers, each with an independent start and stop time setting. Each timer is on when the C70 real-time clock/calendar value is later than its programmed start time, and earlier than its programmed stop time. The timers wrap around 24 hours, as the figure shows.

Figure 5-153: Time of day timer example

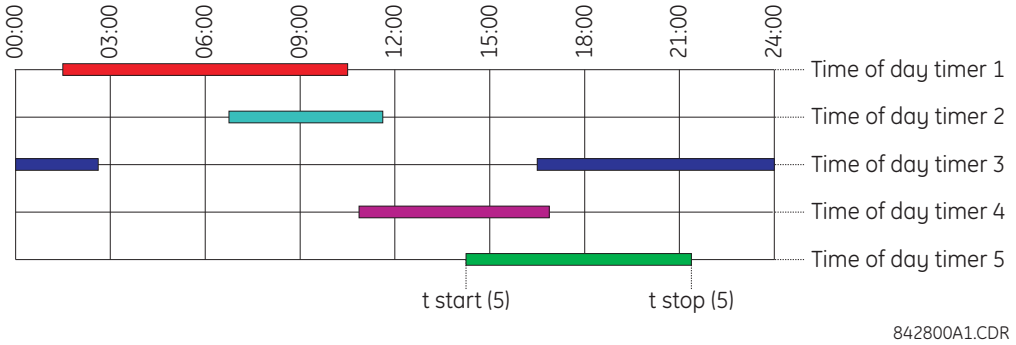

The TIME OF DAY 1 ON FlexLogic operand follows the state of the timers. In addition, one-second pulses are generated on the TIME OF DAY 1 START and TIME OF DAY 1 STOP FlexLogic operands when the timers turn on and off, respectively (see the following figure). These operands can be combined in FlexLogic with the day and month FlexLogic operands and/or with FlexElements operating on the DAYOFYEAR, DAYOFMONTH, and SECONDOFDAY FlexAnalog parameters to create virtually any time and date condition for custom time or season-based control actions. To activate these FlexAnalog parameters, enable at least one time of day timer.

Figure 5-154: Close/open/maintain control via FlexLogic operands

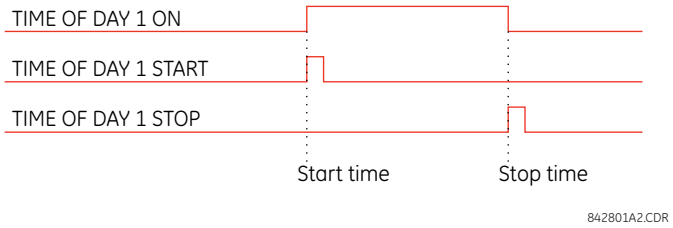

If the relay is connected to an external clock that follows daylight savings time changes, take care that the changes do not result in undesired operation.

The following settings are available for each time of day timer element.

TIME OF DAY TIMER1 START TIME — Used to program the relay clock/calendar value for which the timer turns on.

TIME OF DAY TIMER1 STOP TIME — Used to program the relay clock/calendar value for which the timer turns off.

TIME OF DAY TIMER1 EVENTS — If enabled, the TIME OF DAY 1 ON and TIME OF DAY 1 OFF events are logged.

Figure 5-155: Time of day timer logic

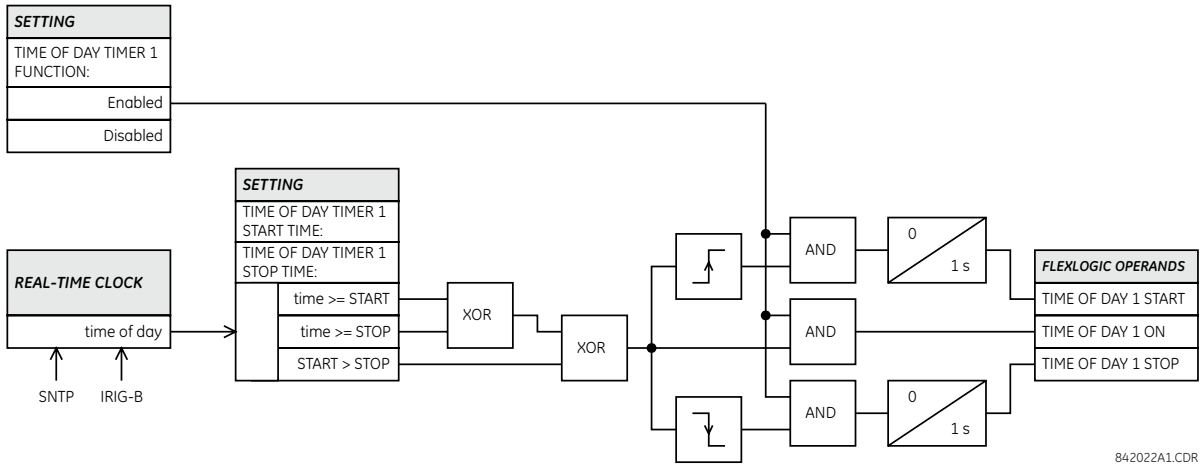

5.9.7 Automatic voltage regulator

SETTINGS ⇨⇩ CONTROL ELEMENTS ⇨⇩ AUTOMATIC VOLTAGE REGULATOR ⇨ AUTOMATIC VOLTAGE REGULATOR 1(3)

■ AUTOMATIC VOLTAGE ■ REGULATOR 1	⇔	**AVR 1 FUNCTION: Disabled**	Range: Disabled, Enabled
	⇩	**AVR 1 SOURCE: SRC 1**	Range: SRC 1, SRC 2, SRC 3, SRC 4, SRC 5, SRC 6
	⇩	**AVR 1 MINIMUM VOLTAGE: 0.500 pu**	Range: 0.500 to 1.500 pu in steps of 0.001
	⇩	**AVR 1 CONTROL MODE: Voltage**	Range: Voltage, VAR
	⇩	**AVR 1 VOLT OPERATING SIGNAL: V1**	Range: Vab, Vbc, Vca, Vaver, V1, Vaux, Vag, Vbg, Vcg
	⇩	**AVR 1 VOLT LEVEL TO CLOSE: 0.950 pu**	Range: 0.750 to 1.500 pu in steps of 0.001
	⇩	**AVR 1 VOLT LEVEL TO OPEN: 1.050 pu**	Range: 0.750 to 1.500 pu in steps of 0.001
	⇩	**AVR 1 VOLT DROP COMPENS Z: 0.00 Ω**	Range: 0 to 250.00 ohms in steps of 0.01
	⇩	**AVR 1 VOLT DROP COMPENS RCA: 75°**	Range: 30 to 90° in steps of 1
	⇩	**AVR 1 VAR LEVEL TO CLOSE: 0.500 pu**	Range: –1.500 to 1.500 pu in steps of 0.001
	⇩	**AVR 1 VAR LEVEL TO OPEN: -0.500 pu**	Range: –1.500 to 1.500 pu in steps of 0.001
	⇩	**AVR 1 POWER FACTOR LIMIT: 1.00**	Range: 0.50 to 1.00 pu in steps of 0.01
	⇩	**AVR 1 VAR OPEN MODE: Minimize No. of Ops.**	Range: Minimize Uptime, Minimize No. of Ops.

⇕	**AVR 1 DELAY BEFORE CLOSE: 1.000 s**	Range: 0.000 to 65.353 s in steps of 0.001
⇕	**AVR 1 DELAY BEFORE OPEN: 1.000 s**	Range: 0.000 to 65.353 s in steps of 0.001
⇕	**AVR 1 BLOCK: Off**	Range: FlexLogic operand
⇕	**AVR 1 TARGET: Self-reset**	Range: Self-reset, Latched, Disabled
⇧	**AVR 1 EVENTS: Disabled**	Range: Disabled, Enabled

The automatic voltage regulator element (AVR) is intended to switch a static capacitor bank breaker open and closed to regulate system voltage, load voltage, power factor, or reactive power. The figure shows some applications.

Figure 5-156: Applications of the capacitor automatic voltage regulator function

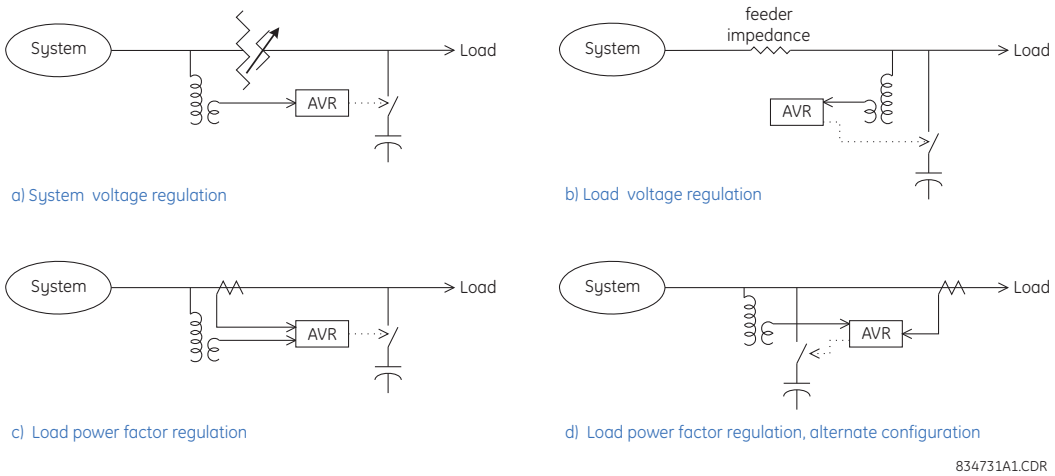

Up to three identical automatic voltage regulator elements are provided, allowing the relay to be used with capacitor banks divided into sections for finer compensation steps, to provide switching speed dependent on the extent of the voltage or power deviation, or to provide different settings depending on a user-programmable factor such as time of day.

Each element can be set to operate in either "Voltage" mode or "VAR" mode. The voltage mode can be used with relatively short time delay settings as a system stability aid, or with longer time delay settings to assist in the regulation of steady state voltage. When the voltage decreases to the volts level to close setting, after the set close delay the capacitor is closed, raising the voltage. When the voltage increases to the level to open setting, after the set open delay the capacitor is opened, lowering the voltage. The load drop compensation feature can be used to effectively sense the voltage at a location remote from the relay.

The "VAR" mode can be used to regulate the var and power factor of a load to reduce transmission and distribution costs. If the capacitor deployment objective is to minimize system power losses, set the power factor limit to 1.000 to disable it and set the var open and close levels symmetrically about zero reactive power, with a difference between levels equal to the reactive power produced by the capacitor plus margin. Larger margins result in less frequent switching.

If on the other hand the deployment objective is solely to minimize power factor rate charges, set the power factor limit to the value at which power factor penalties are incurred, typically 0.9. Set the var close level to the vars that would flow should the power factor be at the limit when at the minimum expected kW demand. The open command characteristics can be selected to suit whether the preference is to minimize the amount of time the capacitor is online or to minimize the number of capacitor close operations. For the former preference, set the var open mode to "Minimize Uptime" and set the var open level below the close level by an amount equal to the capacitor var rating plus margin. For the latter preference, set the var open mode to "Minimize No. of Ops" (minimize number of operations) and set the var open level to the negative of the close level.

Figure 5-157: Automatic voltage regulator pickup characteristics in "VAR" mode

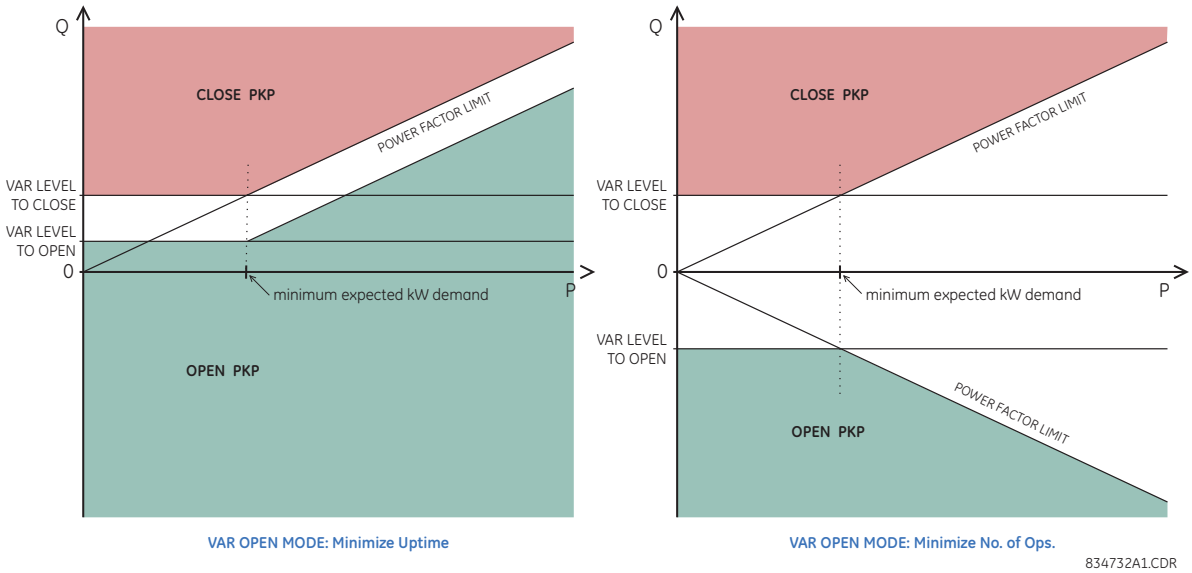

Take care that the settings do not result in the capacitor being continuously cycled close and open. In the voltage mode, set the close voltage settings lower than the open voltage setting by more than the voltage change expected from capacitor switching, plus margin. Similarly in the "VAR" mode, set the close var setting higher than the open var setting by more than the expected var change due to capacitor switching, plus margin. For configurations where the capacitor current is not included in the measured current, there can still be a measured var change due to loads whose power factor increases with increasing voltage. In general, the larger the margin, the less the capacitor is switched.

Set delays long enough to avoid undesired operations on transient conditions. Depending on the application, this can include operations for noise hits, for transient voltage depressions accompanying successful fault clearance, and short-term voltage conditions pending automatic reclosure. Delays can also be used to time co-ordinate the switching of multiple capacitor banks, or sections of the same bank.

The following settings are available.

AVR 1 SOURCE — This setting selects signal source of the control variables of interest. In case of voltage control applications, the selected source needs to have the appropriate voltages configured for proper operation. For example, when using positive-sequence voltage as a control variable, phase voltages must be configured under the source; or when using single-phase auxiliary voltage, the auxiliary source voltage must be configured. In case of "VAR" mode and of voltage mode with voltage drop compensation, the indicated source must be configured with phase voltages and currents into the regulated load or bus, and should include the capacitor current. If the source indicated here does not support the control variable selected, the function will restrain itself from operating, and assert neither the close or open command.

AVR 1 MINIMUM VOLTAGE — This value sets the minimum voltage for capacitor switching, to discriminate against loss of voltage. For voltage mode, this setting applies to the voltage selected for control. For "VAR" mode, this setting applies to the positive sequence voltage.

AVR 1 CONTROL MODE — This setting selects either voltage control for voltage regulation applications, or var control for power factor/reactive power regulation applications.

AVR 1 VOLT OPERATING SIGNAL — When the control mode is voltage, this setting is used to select whether the AVR responds to an individual phase-to-phase voltage or phase-to-ground voltage, the average of the three phase-to-phase voltages, the positive sequence voltage, or the auxiliary RMS voltage. The ability to select the same voltage quantity as is used by other AVRs facilitates coordination with those AVRs.

AVR 1 VOLT LEVEL TO CLOSE — In the voltage mode, this setting specifies the voltage level at or below which to issue the close command.

AVR 1 VOLT LEVEL TO OPEN — In the voltage mode, this setting specifies the voltage level at or above which to issue the open command. The following figure illustrates voltage control level settings.

Figure 5-158: Close and open levels when controlling voltage or VARs

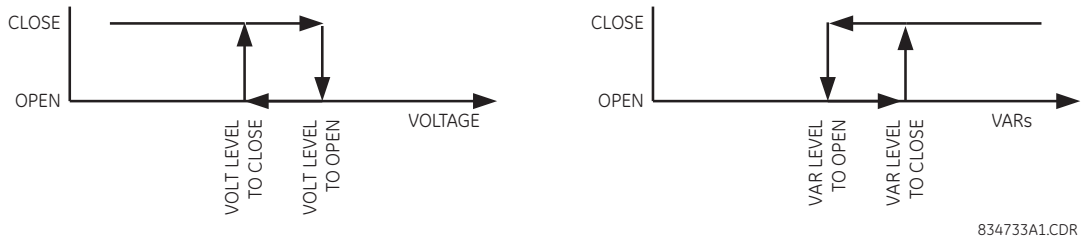

AVR 1 VOLT DROP COMPENS Z — In the voltage mode, this setting allows compensating for voltage drop on the line when the relay measuring point is located upstream of the load. Positive-sequence line impedance is entered in secondary ohms. Compensation cannot exceed 20% of the nominal phase voltage.

AVR 1 VOLT DROP COMPENS RCA — In the voltage mode, this setting specifies the angle of the line impedance for voltage drop calculations.

AVR 1 VAR LEVEL TO CLOSE — In the "VAR" mode, this setting specifies level for the three-phase reactive power level at or above which to issue the close command. The 1 pu value is the product of the nominal primary phase-to-phase voltage, the CT primary, and $\sqrt{3}$. When the source current is an internal summation of two or more CT bank currents, the largest CT primary is used to define the 1 pu value for this setting.

AVR 1 VAR LEVEL TO OPEN — In the "VAR" mode, this setting specifies level for the three-phase reactive power level at or below which to issue the OPEN command. The 1 pu value is defined as for the **VAR LEVEL TO CLOSE** setting.

AVR 1 POWER FACTOR LIMIT — In the "VAR" mode, this setting specifies the power factor below which close commands are allowed. Also affects open commands as shown in the above figure. If set to "1.00", the power factor has no effect.

AVR 1 VAR OPEN MODE — Selects the close command characteristic, either "Minimize No. of Ops." (minimize number of operations) or "Minimize Uptime", as described earlier in the Automatic Voltage Regulator Pickup Characteristics in "VAR" Mode diagram.

AVR 1 DELAY BEFORE CLOSE — Specifies delay before issuing the close command, and is used to coordinate with other regulators, or to ride through abnormal system conditions such as faults or re-close sequences.

AVR 1 DELAY BEFORE OPEN — Specifies delay before issuing the open command, and is used to coordinate with other regulators, or to ride through abnormal system conditions such as faults or re-close sequences.

AVR 1 BLOCK — Specifies a dynamic blocking condition. When blocked the element resets its output flags and internal timers. VT fuse fail is a typical application.

Figure 5-159: Automatic voltage regulator logic

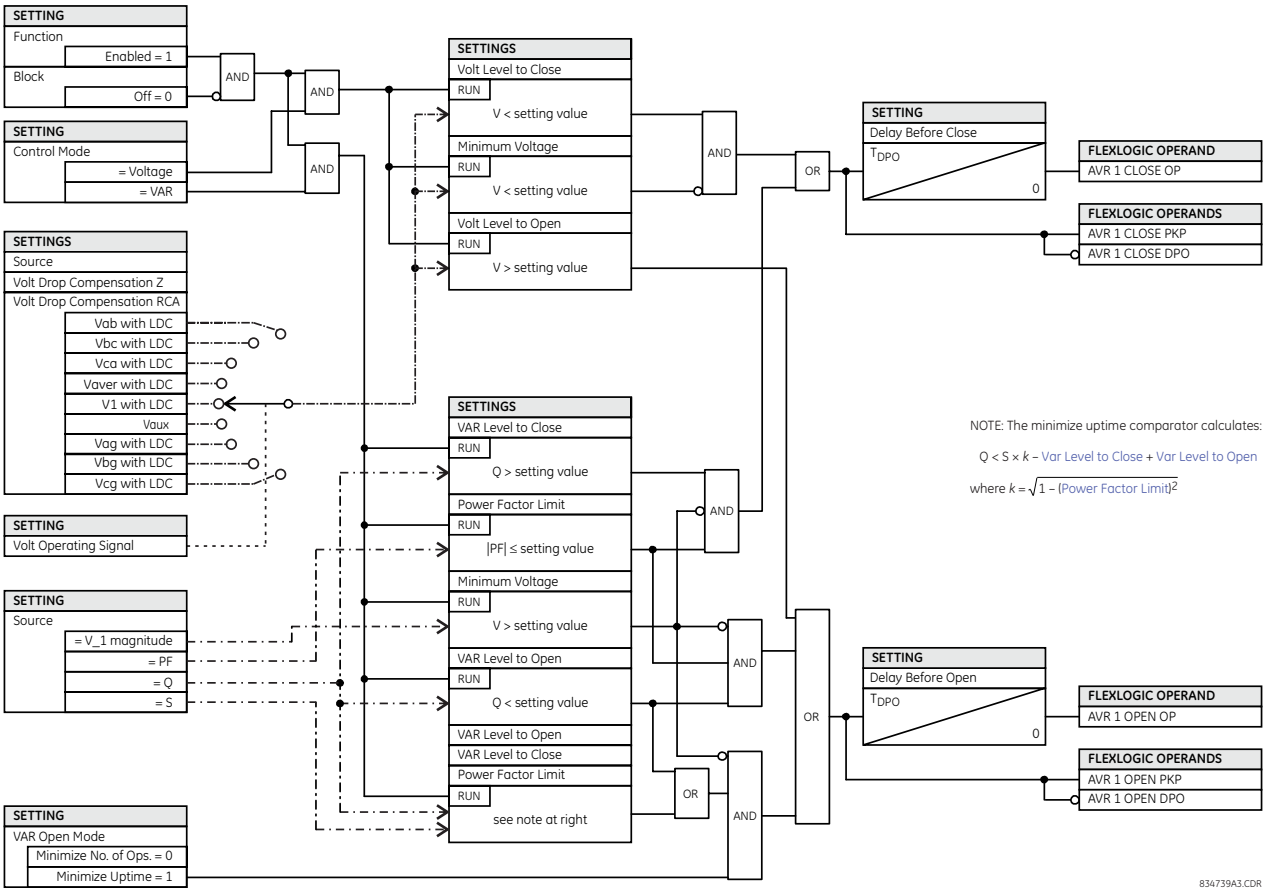

5.9.8 Digital elements

SETTINGS ⇨⇩ CONTROL ELEMENTS ⇨⇩ DIGITAL ELEMENTS ⇨ DIGITAL ELEMENT 1(96)

■ DIGITAL ELEMENT 1 ■	⇔	DIGITAL ELEMENT 1 FUNCTION: Disabled	Range: Disabled, Enabled
	⇩	DIG ELEM 1 NAME: Dig Element 1	Range: up to 16 alphanumeric characters
	⇩	DIG ELEM 1 INPUT: Off	Range: FlexLogic operand
	⇩	DIG ELEM 1 PICKUP DELAY: 0.000 s	Range: 0.000 to 999999.999 s in steps of 0.001
	⇩	DIG ELEM 1 RESET DELAY: 0.000 s	Range: 0.000 to 999999.999 s in steps of 0.001
	⇩	DIGITAL ELEMENT 1 PICKUP LED: Enabled	Range: Disabled, Enabled
	⇩	DIG ELEM 1 BLOCK: Off	Range: FlexLogic operand
	⇩	DIGITAL ELEMENT 1 TARGET: Self-reset	Range: Self-reset, Latched, Disabled
	⇩	DIGITAL ELEMENT 1 EVENTS: Disabled	Range: Disabled, Enabled

NOTE

Digital elements run once per power system cycle.

As such they can easily fail to react to an input signal or a block signal with a duration less than one power system cycle. This also means that digital element output can react up to one power system cycle later than the pickup and reset delay settings indicate.

Do not use digital elements with transient signals, such as communications commands. Do not use digital elements where random delays of up to one cycle cannot be tolerated, such as in high speed protection.

There are 96 identical digital elements available, numbered 1 to 96. A digital element can monitor any FlexLogic operand and present a target message and/or enable events recording depending on the output operand state. The digital element settings include a name to be referenced in any target message, a blocking input from any selected FlexLogic operand, and a timer for pickup and reset delays for the output operand.

DIGITAL ELEMENT 1 INPUT — Selects a FlexLogic operand to be monitored by the digital element.

DIGITAL ELEMENT 1 PICKUP DELAY — Sets the required time delay from element pickup to element operation. If a pickup delay is not required, set to "0," To avoid nuisance alarms, set the delay greater than the operating time of the breaker.

DIGITAL ELEMENT 1 RESET DELAY — Sets the time delay to reset. If a reset delay is not required, set to "0."

DIGITAL ELEMENT 1 PICKUP LED — This setting enables or disabled the digital element pickup LED. When set to "Disabled," the operation of the pickup LED is blocked.

Figure 5-160: Digital element logic

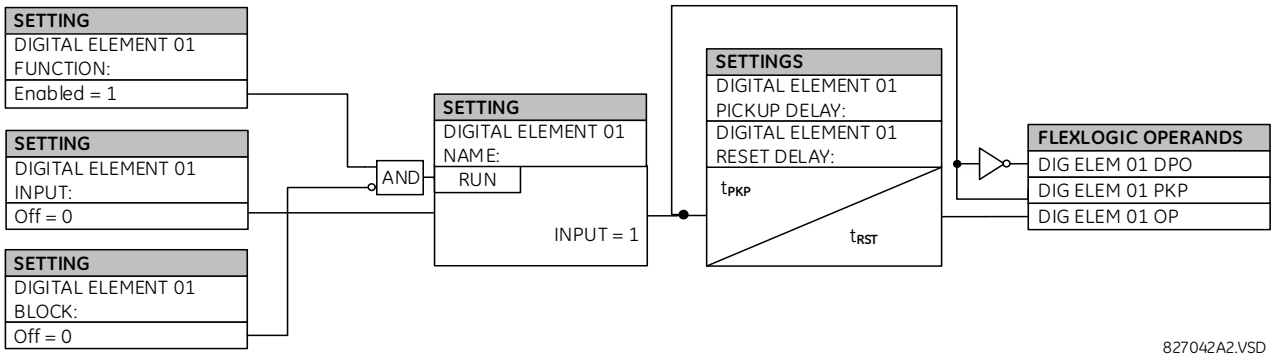

Circuit monitoring applications

Some versions of the digital input modules include an active voltage monitor circuit connected across form-A contacts. The voltage monitor circuit limits the trickle current through the output circuit (see technical specifications for form-A).

As long as the current through the voltage monitor is above a threshold (see technical specifications for form-A), the Cont Op 1 VOn FlexLogic operand is set (for contact input 1—corresponding operands exist for each contact output). If the output circuit has a high resistance or the DC current is interrupted, the trickle current drops below the threshold and the Cont Op 1 VOff FlexLogic operand is set. Consequently, the state of these operands can be used as indicators of the integrity of the circuits in which form-A contacts are inserted.

Example 1: Breaker trip circuit integrity monitoring

In many applications it is desired to monitor the breaker trip circuit integrity so that problems can be detected before a trip operation is required. The circuit is considered to be healthy when the voltage monitor connected across the trip output contact detects a low level of current, well below the operating current of the breaker trip coil. If the circuit presents a high resistance, the trickle current falls below the monitor threshold, and an alarm is declared.

In most breaker control circuits, the trip coil is connected in series with a breaker auxiliary contact that is open when the breaker is open (see figure). To prevent unwanted alarms in this situation, the trip circuit monitoring logic must include the breaker position.

Figure 5-161: Trip circuit example 1

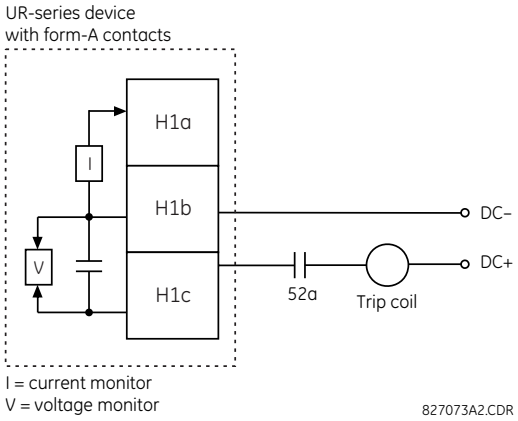

Assume the output contact H1 is a trip contact. Using the contact output settings, this output is given an ID name; for example, "Cont Op 1." Assume a 52a breaker auxiliary contact is connected to contact input H5a to monitor breaker status. Using the contact input settings, this input is given an ID name, for example, "Cont Ip 1," and is set "On" when the breaker is closed. The settings to use digital element 1 to monitor the breaker trip circuit are indicated (EnerVista example shown).

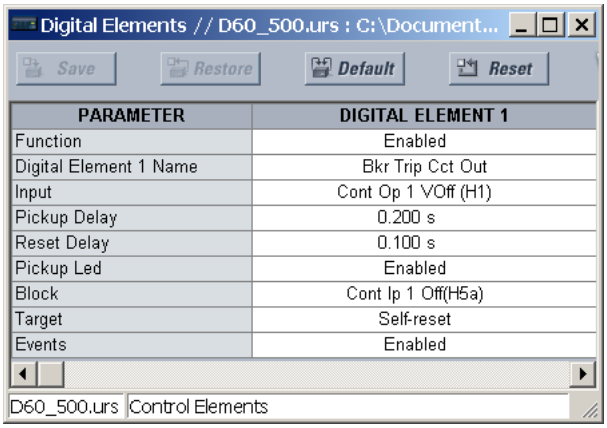

PARAMETER	DIGITAL ELEMENT 1
Function	Enabled
Digital Element 1 Name	Bkr Trip Cct Out
Input	Cont Op 1 VOff (H1)
Pickup Delay	0.200 s
Reset Delay	0.100 s
Pickup Led	Enabled
Block	Cont Ip 1 Off(H5a)
Target	Self-reset
Events	Enabled

Example 2: Breaker trip circuit integrity monitoring

If it is required to monitor the trip circuit continuously, independent of the breaker position (open or closed), a method to maintain the monitoring current flow through the trip circuit when the breaker is open must be provided (as shown in the following figure). This can be achieved by connecting a suitable resistor (see figure) across the auxiliary contact in the trip circuit. In this case, it is not required to supervise the monitoring circuit with the breaker position – the **BLOCK** setting is selected to "Off." In this case, the settings are as follows (EnerVista example shown).

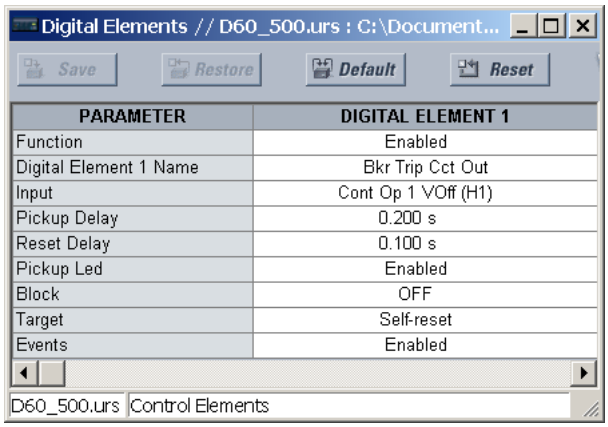

PARAMETER	DIGITAL ELEMENT 1
Function	Enabled
Digital Element 1 Name	Bkr Trip Cct Out
Input	Cont Op 1 VOff (H1)
Pickup Delay	0.200 s
Reset Delay	0.100 s
Pickup Led	Enabled
Block	OFF
Target	Self-reset
Events	Enabled

Figure 5-162: Trip circuit example 2

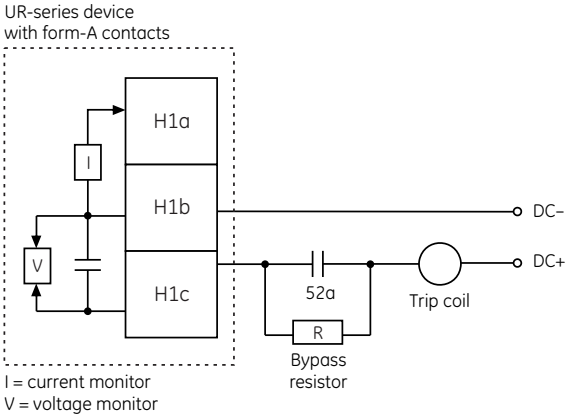

Values for resistor "R"

Power supply	Resistance	Power
24 V DC	1000 O	2 W
30 V DC	5000 O	2 W
48 V DC	10000 O	2 W
110 V DC	25000 O	5 W
125 V DC	25000 O	5 W
250 V DC	50000 O	5 W

827074A3.CDR

NOTE

The wiring connection for two examples above is applicable to both form-A contacts with voltage monitoring and solid-state contact with voltage monitoring.

5.9.9 Digital counters

SETTINGS ⇨⇩ CONTROL ELEMENTS ⇨⇩ DIGITAL COUNTERS ⇨⇩ COUNTER 1(8)

■ COUNTER 1 ■	⇔	COUNTER 1 FUNCTION: Disabled	Range: Disabled, Enabled
	⇩	COUNTER 1 NAME: Counter 1	Range: up to 12 alphanumeric characters
	⇩	COUNTER 1 UNITS:	Range: up to six alphanumeric characters
	⇩	COUNTER 1 PRESET: 0	Range: –2,147,483,648 to +2,147,483,647

⇕	**COUNTER 1 COMPARE: 0**	Range: –2,147,483,648 to +2,147,483,647
⇕	**COUNTER 1 UP: Off**	Range: FlexLogic operand
⇕	**COUNTER 1 DOWN: Off**	Range: FlexLogic operand
⇕	**COUNTER 1 BLOCK: Off**	Range: FlexLogic operand
⇕	**CNT1 SET TO PRESET: Off**	Range: FlexLogic operand
⇕	**COUNTER 1 RESET: Off**	Range: FlexLogic operand
⇕	**COUNT1 FREEZE/RESET: Off**	Range: FlexLogic operand
⇧	**COUNT1 FREEZE/COUNT: Off**	Range: FlexLogic operand

There are eight identical digital counters, numbered from 1 to 8. A digital counter counts the number of state transitions from Logic 0 to Logic 1. The counter is used to count operations such as the pickups of an element, the changes of state of an external contact (for example, breaker auxiliary switch), or pulses from a watt-hour meter.

COUNTER 1 UNITS — Assigns a label to identify the unit of measure pertaining to the digital transitions to be counted. The units label appears in the corresponding actual values status.

COUNTER 1 PRESET — Sets the count to a required preset value before counting operations begin, as in the case where a substitute relay is to be installed in place of an in-service relay, or while the counter is running.

COUNTER 1 COMPARE — Sets the value to which the accumulated count value is compared. Three FlexLogic output operands are provided to indicate if the present value is 'more than (HI)', 'equal to (EQL)', or 'less than (LO)' the set value.

COUNTER 1 UP — Selects the FlexLogic operand for incrementing the counter. If an enabled UP input is received when the accumulated value is at the limit of +2,147,483,647 counts, the counter rolls over to –2,147,483,648.

COUNTER 1 DOWN — Selects the FlexLogic operand for decrementing the counter. If an enabled DOWN input is received when the accumulated value is at the limit of –2,147,483,648 counts, the counter rolls over to +2,147,483,647.

COUNTER 1 BLOCK — Selects the FlexLogic operand for blocking the counting operation. All counter operands are blocked.

CNT1 SET TO PRESET — Selects the FlexLogic operand used to set the count to the preset value. The counter sets to the preset value in the following situations:

- When the counter is enabled and the **CNT1 SET TO PRESET** operand has the value 1 (when the counter is enabled and **CNT1 SET TO PRESET** operand is 0, the counter sets to 0)
- When the counter is running and the **CNT1 SET TO PRESET** operand changes the state from 0 to 1 (**CNT1 SET TO PRESET** changing from 1 to 0 while the counter is running has no effect on the count)
- When a reset or reset/freeze command is sent to the counter and the **CNT1 SET TO PRESET** operand has the value 1 (when a reset or reset/freeze command is sent to the counter and the **CNT1 SET TO PRESET** operand has the value 0, the counter sets to 0)

COUNTER 1 RESET — Selects the FlexLogic operand for setting the count to either "0" or the preset value depending on the state of the **CNT1 SET TO PRESET** operand.

COUNTER 1 FREEZE/RESET — Selects the FlexLogic operand for capturing (freezing) the accumulated count value into a separate register with the date and time of the operation, and resetting the count to "0."

COUNTER 1 FREEZE/COUNT — Selects the FlexLogic operand for capturing (freezing) the accumulated count value into a separate register with the date and time of the operation, and continuing counting. The present accumulated value and captured frozen value with the associated date/time stamp are available as actual values. If control power is interrupted, the accumulated and frozen values are saved into non-volatile memory during the power-down operation.

Figure 5-163: Digital counter logic

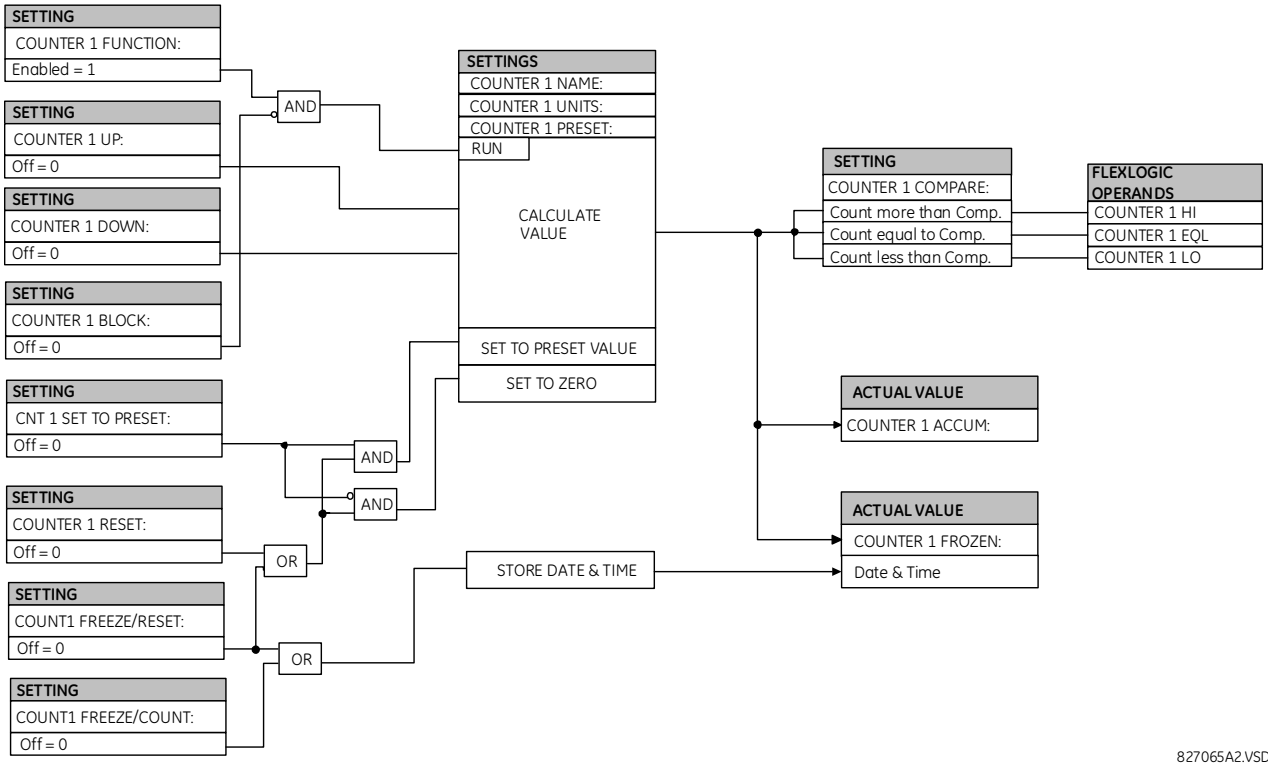

5.9.10 Monitoring elements

5.9.10.1 Menu

SETTINGS ⇨⇩ CONTROL ELEMENTS ⇨⇩ MONITORING ELEMENTS

■ MONITORING ■ ELEMENTS	⇔	■ BREAKER 1 ■ ARCING CURRENT	See below
		⇩	
	⇕	■ BREAKER 3 ■ ARCING CURRENT	
	⇕	■ BREAKER ■ FLASHOVER 1	See page 5-313
	⇕	■ BREAKER RESTRIKE 1 ■	See page 5-318
		⇩	
	⇕	■ BREAKER RESTRIKE 3 ■	
	⇕	■ VT FUSE FAILURE 1 ■	See page 5-320
		⇩	
	⇕	■ VT FUSE FAILURE 6 ■	
	⇧	■ THERMAL OVERLOAD ■ PROTECTION	See page 5-322

5.9.10.2 Breaker arcing current

SETTINGS ⇨⇩ CONTROL ELEMENTS ⇨⇩ MONITORING ELEMENTS ⇨ BREAKER 1(3) ARCING CURRENT

■ BREAKER 1 ■ ARCING CURRENT	⇔	BKR 1 ARC AMP FUNCTION: Disabled	Range: Disabled, Enabled
	⇩	BKR 1 ARC AMP SOURCE: SRC 1	Range: SRC 1, SRC 2, SRC 3, SRC 4, SRC 5, SRC 6
	⇩	BKR 1 ARC AMP INT-A: Off	Range: FlexLogic operand
	⇩	BKR 1 ARC AMP INT-C: Off	Range: FlexLogic operand
	⇩	BKR 1 ARC AMP DELAY: 0.000 s	Range: 0.000 to 65.535 s in steps of 0.001
	⇩	BKR 1 ARC AMP LIMIT: 1000 kA2-cyc	Range: 0 to 50000 kA^2-cycle in steps of 1
	⇩	BKR 1 INTERRUPTION RATING: 31.5 kA	Range: 0.0 to 100.0 kA in steps of 0.1
	⇩	BKR 1 CLR ARC AMPS: Off	Range: FlexLogic operand
	⇩	BKR 1 ARC AMP BLOCK: Off	Range: FlexLogic operand
	⇩	BKR 1 ARC AMP TARGET: Self-reset	Range: Self-reset, Latched, Disabled
	⇩	BKR 1 ARC AMP EVENTS: Disabled	Range: Disabled, Enabled

There is one breaker arcing current element available per CT bank, with a minimum of two elements.

This element calculates an estimate of the per-phase wear on the breaker contacts by measuring and integrating the current squared passing through the breaker contacts as an arc. These per-phase values are added to accumulated totals for each phase and compared to a programmed threshold value. When the threshold is exceeded in any phase, the relay can set an output operand to "1." The accumulated value for each phase can be displayed as an actual value.

The operation of the scheme is shown in the following logic diagram. The same output operand that is selected to operate the output relay used to trip the breaker, indicating a tripping sequence has begun, is used to initiate this feature. A time delay is introduced between initiation and the starting of integration to prevent integration of current flow through the breaker before the contacts have parted. This interval includes the operating time of the output relay, any other auxiliary relays, and the breaker mechanism. For maximum measurement accuracy, measure the interval between change-of-state of the operand (from 0 to 1) and contact separation for the specific installation. Integration of the measured current continues for 100 ms, which is expected to include the total arcing period.

The feature is programmed to perform fault duration calculations. Fault duration is defined as a time between operation of the disturbance detector occurring before initiation of this feature, and reset of an internal low-set overcurrent function. Correction is implemented to account for a non-zero reset time of the overcurrent function.

Breaker arcing currents and fault duration values are available under the **ACTUAL VALUES ⇨⇩ RECORDS ⇨⇩ MAINTENANCE ⇨ BREAKER 1(3)** menus.

BKR 1 ARC AMP INT-A(C) — Select the same output operands that are configured to operate the output relays used to trip the breaker. In three-pole tripping applications, configure the same operand to initiate arcing current calculations for poles A, B, and C of the breaker. In single-pole tripping applications, configure per-pole tripping operands to initiate the calculations for the poles that are actually tripped.

BKR 1 ARC AMP DELAY — This setting is used to program the delay interval between the time the tripping sequence is initiated and the time the breaker contacts are expected to part, starting the integration of the measured current.

BKR 1 ARC AMP LIMIT — Selects the threshold value above which the output operand is set.

BKR 1 CLR ARC AMPS — Selects a FlexLogic Operand to clear the accumulated I^2t values (kA^2-cycle), reset fault duration items (breaker operating time), clear ARCING AMPS (kA^2-cycle) and AMP MAX (kA) values of the last event.

BKR 1 INTERUPTION RATING — This setting specifies the maximum symmetrical interruption rating of the circuit breaker.

Figure 5-164: Arcing current measurement

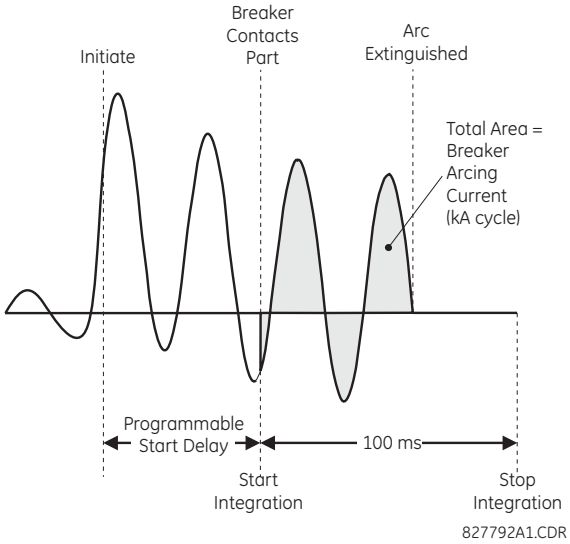

5

Figure 5-165: Breaker arcing current logic

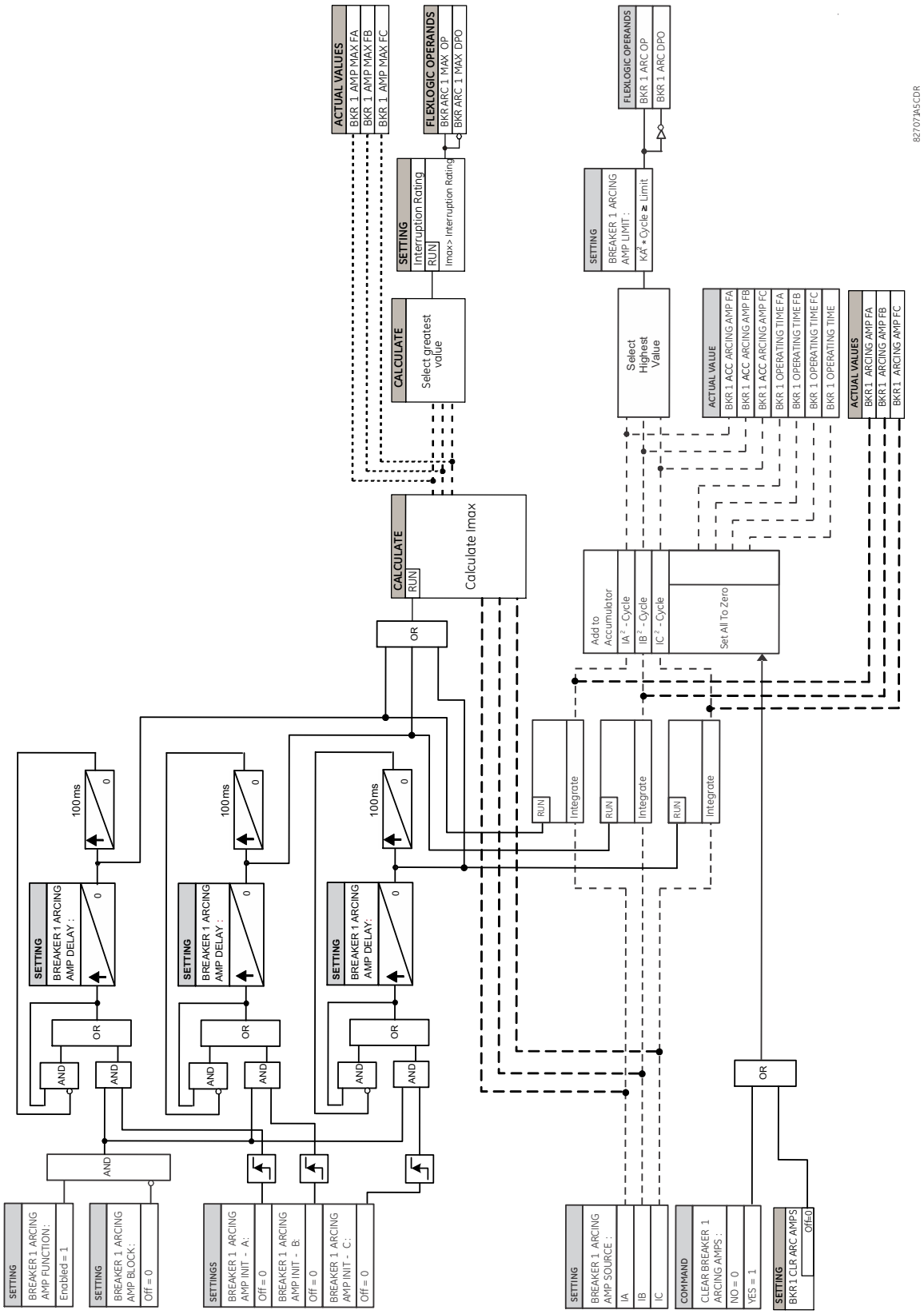

5.9.10.3 Breaker flashover

SETTINGS ⇨⇩ CONTROL ELEMENTS ⇨⇩ MONITORING ELEMENTS ⇨⇩ BREAKER FLASHOVER 1

■ BREAKER ■ FLASHOVER 1	⇔	**BRK 1 FLSHOVR FUNCTION: Disabled**	Range: Disabled, Enabled
	⇩	**BRK 1 FLSHOVR SIDE 1 SRC: SRC 1**	Range: SRC 1, SRC 2, SRC 3, SRC 4, SRC 5, SRC 6
	⇩	**BRK 1 FLSHOVR SIDE 2 SRC: None**	Range: None, SRC 1, SRC 2, SRC 3, SRC 4, SRC 5, SRC 6
	⇩	**BRK 1 STATUS CLSD A: Off**	Range: FlexLogic operand
	⇩	**BRK 1 STATUS CLSD C: Off**	Range: FlexLogic operand
	⇩	**BRK 1 FLSHOVR V PKP: 0.850 pu**	Range: 0.004 to 1.500 pu in steps of 0.001
	⇩	**BRK 1 FLSHOVR DIFF V PKP: 1000 V**	Range: 0 to 100000 V in steps of 1
	⇩	**BRK 1 FLSHOVR AMP PKP: 0.600 pu**	Range: 0.020 to 1.500 pu in steps of 0.001
	⇩	**BRK 1 FLSHOVR PKP DELAY: 0.100 s**	Range: 0.000 to 65.535 s in steps of 0.001
	⇩	**BRK 1 FLSHOVR SPV A: Off**	Range: FlexLogic operand
	⇩	**BRK 1 FLSHOVR SPV C: Off**	Range: FlexLogic operand
	⇩	**BRK 1 FLSHOVR BLOCK: Off**	Range: FlexLogic operand
	⇩	**BRK 1 FLSHOVR TARGET: Self-reset**	Range: Self-reset, Latched, Disabled
	⇧	**BRK 1 FLSHOVR EVENTS: Disabled**	Range: Disabled, Enabled

The detection of the breaker flashover is based on the following conditions:

- Breaker open,
- When phase voltage measured from either side of the breaker is greater than the setting,
- Measured current through the breaker is greater than the pickup setting, and
- Voltage difference across the breaker drops below the pickup setting (only applicable to six VTs application)

Furthermore, the scheme is applicable for cases where one or two sets of three-phase voltages are available across the breaker, as follows:

- One set of three-phase voltages is available across the breaker (three VTs application)
- Two sets of three-phase voltages are available across the breaker (six VTs application)

Three VT breaker flashover application

When only one set of VTs is available across the breaker, set the **BRK 1 FLSHOVR SIDE 2 SRC** setting to "None."

NOTE

Voltages must be present prior to flashover conditions. If the three VTs are placed after the breaker on the line (or feeder), and the downstream breaker is open, the measured voltage is zero and the flashover element is not initiated.

The flashover detection resets if the current drops below **BRK 1 FLSHOVR AMP PKP**, the breaker closes, or the FlexLogic operand selected by **BRK 1 FLSHOVR SPV A** changes to high. It is recommended to use the supervision **BRK 1 FLSHOVR SPV A** setting, and select a trip operand that does not allow the flashover element to pick up prior to the trip.

The flashover detection can be used for external alarm, re-tripping the breaker, or energizing the lockout relay.

Consider the following configuration:

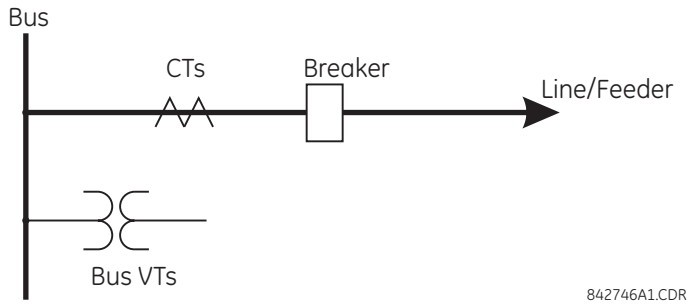

The source 1 (SRC1) phase currents are feeder CTs and phase voltages are bus VTs, and Contact Input 1 is set as Breaker 52a contact. The conditions prior to flashover detection are:

- 52a status = 0
- VAg is greater than the **BRK 1 FLSHOVR V PKP** setting
- IA is below **BRK 1 FLSHOVR AMP PKP** (ideally, IA = 0)

The conditions at flashover detection are:

- 52a status = 0
- VAg is greater or lesser than the **BRK 1 FLSHOVR V PKP** setting
- IA is greater than the **BRK 1 FLSHOVR AMP PKP** setting

Six VT breaker flashover application

In a six-VT application, the VTs located on both sides of a breaker are available. When the breaker is open, the voltage difference across the breaker is the rated voltage if the line is not energized from the remote end, or it can be two times the rated voltage at the time of synchronization if the line is energized from the remote. At the occurrence of breaker flashover, the voltage difference across breaker drops and current greater than **BRK 1 FLSHOVR AMP PKP** starts flowing through the breaker. These conditions are also true for a normal closed operation of a breaker where the voltage difference across breaker is practically zero and load current flows through the breaker. To distinguish between breaker flashover and normal closed operation of breaker, the Breaker Status is utilized.

In a six-VT configuration, if the voltages from VTs located on one of the sides of breaker disappear due to VT fuse failure or other reason, a three-VT configuration can provide the breaker flashover detection. If however, the blocking of breaker flashover detection is wanted under voltage loss on one side condition, then it can be done by applying the appropriate FlexLogic operand to the **BRK FLSHOVR BLOCK** setting.

Consider the following configuration:

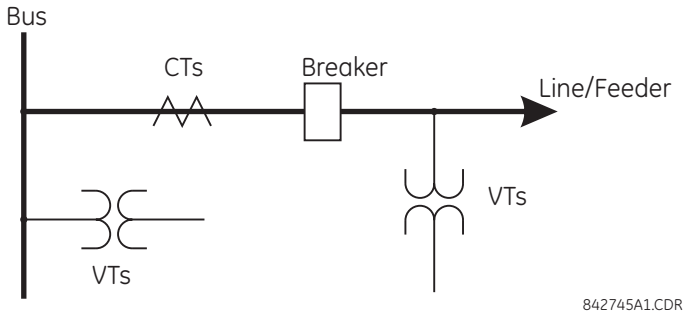

The source 1 (SRC1) phase currents are CTs and phase voltages are bus VTs. The source 2 (SRC2) phase voltages are line VTs. Contact input 1 is set as the breaker 52a contact (optional).

The conditions prior to flashover detection are:

- 52a status = 0
- VAg or Vag greater than the **BRK 1 FLSHOVR V PKP** setting
- IA is below **BRK 1 FLSHOVR AMP PKP** (ideally, IA = 0)
- ΔVA is greater than the **BRK 1 FLSHOVR DIFF V PKP** setting

The conditions at flashover detection are:

- 52a status = 0
- VAg or Vag greater or lesser than the **BRK 1 FLSHOVR V PKP** setting
- IA is greater than the **BRK 1 FLSHOVR AMP PKP** setting
- ΔVA is less than the **BRK 1 FLSHOVR DIFF V PKP** setting

NOTE

The element operates only when phase-to-ground voltages are connected to relay terminals. The flashover element does not operate if delta voltages are applied.

Settings

BRK 1 FLSHOVR SIDE 1 SRC — This setting specifies a signal source used to provide three-phase voltages and three-phase currents from one side of the current breaker. The source selected as a setting and must be configured with breaker phase voltages and currents, even if only three VTs are available across the breaker.

BRK 1 FLSHOVR SIDE 2 SRC — This setting specifies a signal source used to provide another set of three phase voltages whenever six VTs are available across the breaker. For a three-VT application, set this setting to "None."

BRK 1 STATUS CLSD A to **BRK 1 STATUS CLSD C** — These settings specify FlexLogic operands to indicate the closed status of the breaker. A separate FlexLogic operand can be selected to detect individual breaker pole status and provide flashover detection. The recommended setting is 52a breaker contact or another operand defining the breaker poles closed status.

NOTE

Leaving this setting off, meaning not configuring any FlexLogic to indicated Closed Breaker leads to maloperation of the element.

BRK 1 FLSHOVR V PKP — This setting specifies a pickup level for the phase voltages from one or both sides of the breaker. If six VTs are available, opening the breaker leads to two possible combinations – live voltages from only one side of the breaker, or live voltages from both sides of the breaker. The detection of voltage above the selected value on either side of the breaker sets the scheme ready for flashover detection. Set **BRK FLSHOVR V PKP** to 85 to 90% of the nominal voltage.

BRK 1 FLSHOVR DIFF V PKP — This setting specifies a pickup level for the phase voltage difference when two VTs per phase are available across the breaker. Set this setting to be lower than the monitored voltage difference that is observed when closed or opened breaker resistors are left in service. The setting is selected as primary volts difference between the sources.

BRK 1 FLSHOVR AMP PKP — This setting specifies the normal load current which can flow through the breaker. Depending on the flashover protection application, the flashover current can vary from levels of the charging current when the line is not loaded to well above the maximum line (feeder) load (line/feeder connected to load).

BRK 1 FLSHOVR SPV A to **BRK 1 FLSHOVR SPV C** — These settings specify FlexLogic operands (per breaker pole) that supervise the operation of the element per phase. Supervision can be provided by operation of other protection elements, breaker failure, and close and trip commands. A six-cycle time delay applies after the selected FlexLogic operand resets.

BRK FLSHOVR PKP DELAY — This setting specifies the time delay to operate after a pickup condition is detected. Do not set it too long else the flashover current can disappear before its detection.

Figure 5-166: Breaker flashover logic

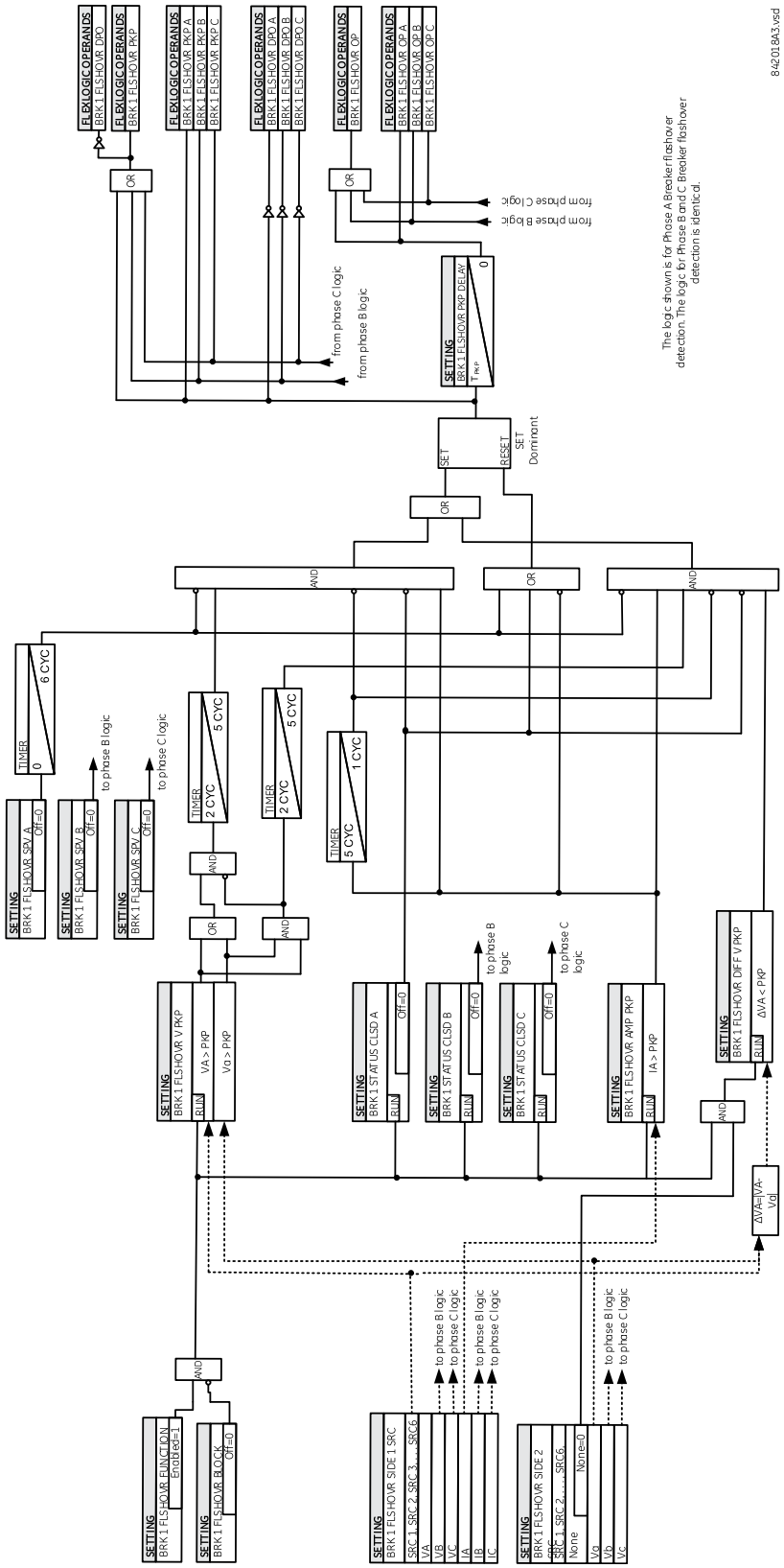

5.9.10.4 Breaker restrike

SETTINGS ⇨⇩ CONTROL ELEMENTS ⇨⇩ MONITORING ELEMENTS ⇨⇩ BREAKER RESTRIKE 1(3)

■ BREAKER RESTRIKE 1 ■	⇔	BREAKER RESTRIKE 1 FUNCTION: Disabled	Range: Disabled, Enabled
	⇩	BRK RESTRIKE 1 BLOCK: Off	Range: FlexLogic operand
	⇩	BREAKER RESTRIKE 1 SOURCE: SRC 1	Range: SRC 1, SRC 2, SRC 3, SRC 4, SRC 5, SRC 6
	⇩	BREAKER RESTRIKE 1 PICKUP: 0.50 pu	Range: 0.10 to 2.00 pu in steps of 0.01
	⇩	BREAKER RESTRIKE 1 RST DELAY: 0.100 s	Range: 0.000 to 65.535 s in steps of 0.001
	⇩	BREAKER RESTRIKE 1 HF DETECT: Enabled	Range: Disabled, Enabled
	⇩	BRK RSTR 1 BRK OPEN: Off	Range: FlexLogic operand
	⇩	BRK RSTR 1 OPEN CMD: Off	Range: FlexLogic operand
	⇩	BRK RSTR 1 CLS CMD: Off	Range: FlexLogic operand
	⇩	BREAKER RESTRIKE 1 TARGET: Self-reset	Range: Self-reset, Latched, Disabled
	⇧	BREAKER RESTRIKE 1 EVENTS: Disabled	Range: Disabled, Enabled

5

One breaker restrike element is provided for each DSP in the C70.

According to IEEE standard C37.100 entitled IEEE Standard Definitions for Power Switchgear, restrike is defined as "a resumption of current between the contacts of a switching device during an opening operation after an interval of zero current of ¼ cycle at normal frequency or longer."

Figure 5-167: Typical restrike waveform and detection flag

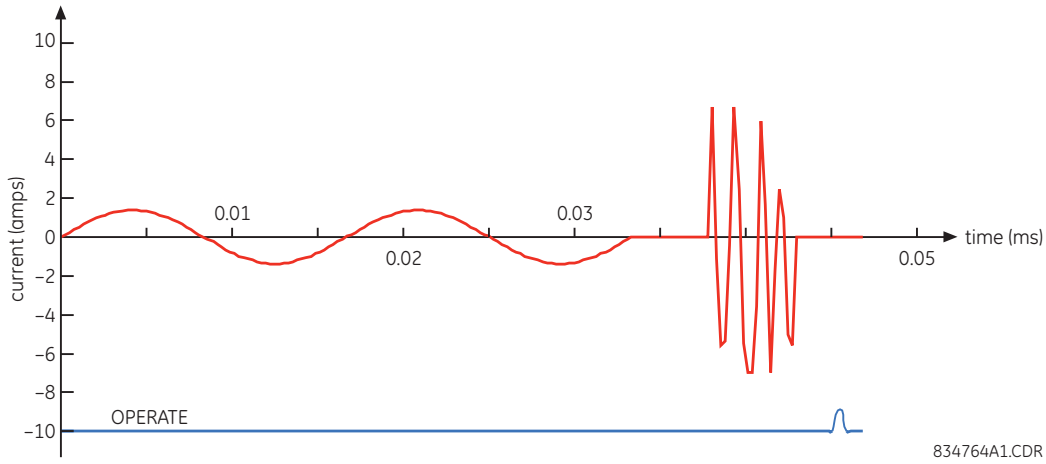

The breaker restrike algorithm responds to a successful interruption of the phase current following a declaration of capacitor bank offline as per the breaker pole indication. If a high-frequency or system frequency current with a magnitude greater than the threshold is resumed at least ¼ of a cycle later than the phase current interruption, then a

breaker restrike condition is declared in the corresponding phase and the BRK RESTRIKE 1 OP operand asserts for a short period of time. The user can add counters and other logic to facilitate the decision making process as to the appropriate actions upon detecting a single restrike or a series of consecutive restrikes.

A restrike event (FlexLogic operand) is declared if all of the following hold:

- The current is initially interrupted
- The breaker status is open
- An elevated high frequency current condition occurs (if the **BREAKER RESTRIKE 1 HF DETECT** setting is Enabled, otherwise the condition is bypassed), and
- The current subsequently drops out again

The algorithm is illustrated in the following state machine diagram.

Figure 5-168: Algorithm illustration of state machine to detect restrike

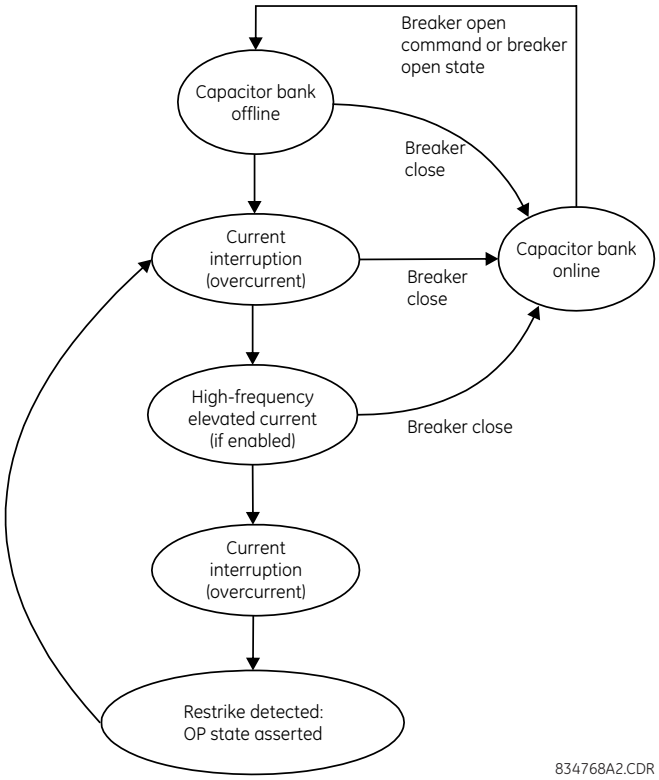

In this way, a distinction is made between a self-extinguishing restrike and permanent breaker failure condition. The latter can be detected by the breaker failure function or a regular instantaneous overcurrent element. Also, a fast succession of restrikes is picked up by breaker failure or instantaneous overcurrent protection.

The following settings are available for each element.

BREAKER RESTRIKE 1 FUNCTION — Enables and disables operation of the breaker restrike detection element.

BRK RESTRIKE 1 BLOCK — Blocks operation of the breaker restrike detection element.

BREAKER RESTRIKE 1 SOURCE — Selects the source of the current for this element. This source must have a valid CT bank assigned.

BREAKER RESTRIKE 1 PICKUP — Specifies the pickup level of the overcurrent detector in per-unit values of CT nominal current.

BREAKER RESTRIKE 1 RST DELAY — Specifies the reset delay for this element. When set to "0 ms," then FlexLogic operand is picked up for only 1/8th of the power cycle.

BREAKER RESTRIKE 1 HF DETECT — Enables/disables high-frequency (HF) pattern detection when breaker restrike occurs. High-frequency pattern is typical for capacitor bank, cables, and long transmission lines applications.

BRK RSTR 1 BRK OPEN — Assigns a FlexLogic operand indicating the open position of the breaker. It must be logic "1" when the breaker is open. It is important to assign either 52 contact with this setting or breaker close command with **BRK RSTR 1 CLS CMD** setting to give clear indication to the relay about breaker status.

BRK RSTR 1 OPEN CMD — Assigns a FlexLogic operand indicating a breaker open command. It must be logic "1" when the breaker is opened, either manually or from protection logic.

BRK RSTR 1 CLS CMD — Assigns a FlexLogic operand indicating a breaker close command. It must be logic "1" when the breaker is closed.

Figure 5-169: Breaker restrike logic

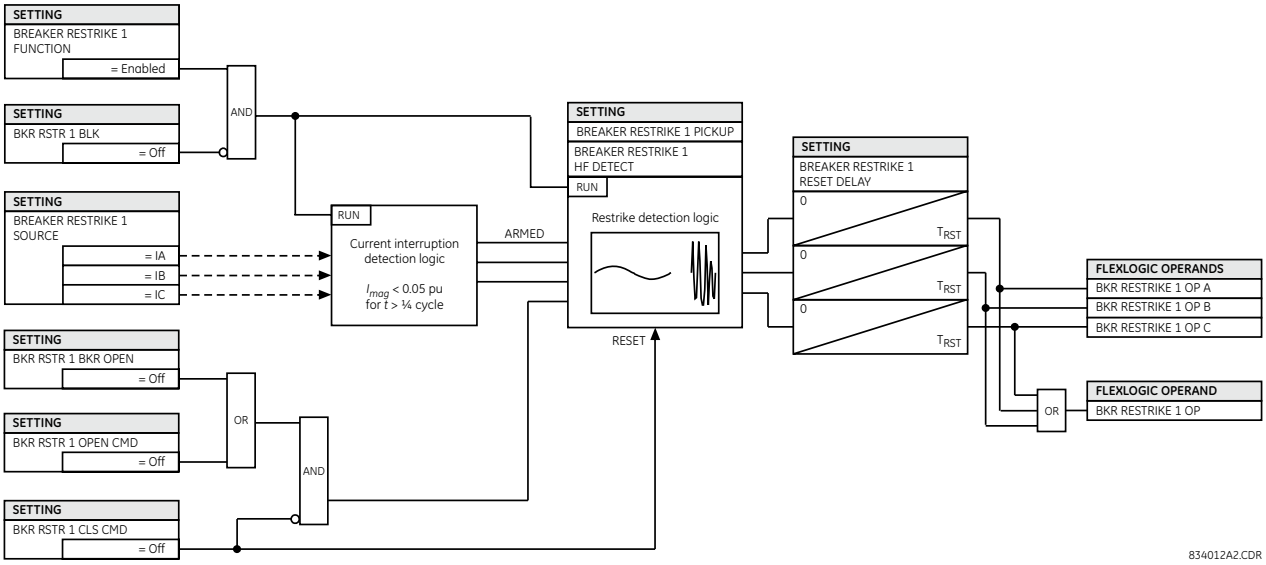

5.9.10.5 VT fuse failure

SETTINGS ⇨⇩ CONTROL ELEMENTS ⇨⇩ MONITORING ELEMENTS ⇨⇩ VT FUSE FAILURE 1(6)

■ **VT FUSE FAILURE 1** ■	⇔	**VT FUSE FAILURE 1 FUNCTION: Disabled**	Range: Disabled, Enabled
	⇩	**VT FUSE FAILURE 1 ALARM DELAY: 1.000 s**	Range: 0.000 to 65.535 s in steps of 0.001
	⇩	**NEUTRAL WIRE OPEN 1 DETECTION: Disabled**	Range: Disabled, Enabled
	⇩	**NEUTRAL WIRE OPEN 1 3 HARM PKP: 0.100 pu**	Range: 0.004 to 3.000 pu in steps of 0.001

Every signal source includes a fuse failure scheme.

The VT fuse failure detector is used to raise an alarm and/or block elements that operate incorrectly for a full or partial loss of AC potential caused by one or more blown fuses. Some elements that can be blocked (via the BLOCK input) are distance, voltage restrained overcurrent, and directional current.

There are two classes of fuse failure that occur:

- Class A — Loss of one or two phases
- Class B — Loss of all three phases

Different means of detection are required for each class. An indication of class A failures is a significant level of negative-sequence voltage, whereas an indication of class B failures is when positive sequence current is present and there is an insignificant amount of positive sequence voltage. Also, a rapid decrease in the phase voltages magnitude from a healthy voltage level without disturbance in current can indicate VT fuse fail conditions. These noted indications of fuse failure can also be present when faults are present on the system, so a means of detecting faults and inhibiting fuse failure declarations during these events is provided.

Once the fuse failure condition is declared, it is sealed-in until the cause that generated it disappears.

An additional condition is introduced to inhibit a fuse failure declaration when the monitored circuit is de-energized; positive-sequence voltage and current are both below threshold levels.

VT FUSE FAILURE 1 FUNCTION — Enables and disables the fuse failure feature for Source 1 VT Fuse Fail.

NEUTRAL WIRE OPEN 1 DETECTION — Enables and disables the VT neutral wire open detection function. When the VT is connected in Delta, do not enable this function because there is no neutral wire for Delta connected VT.

NEUTRAL WIRE OPEN 1 3 HRAM PKP — Specifies the pickup level of 3rd harmonic of 3V0 signal for the **NEUTRAL WIRE OPEN DETECTION** logic to pick up.

Base voltage for this element is **PHASE VT SECONDARY** setting in the case of WYE VTs and (**PHASE VT SECONDARY**)/ $\sqrt{3}$ in case of DELTA VTs. The setting is found under **SETTINGS ⇨⇩ SYSTEM SETUP ⇨ AC INPUTS ⇨⇩ VOLTAGE BANK ⇨ PHASE VT SECONDARY**.

Figure 5-170: VT fuse fail logic

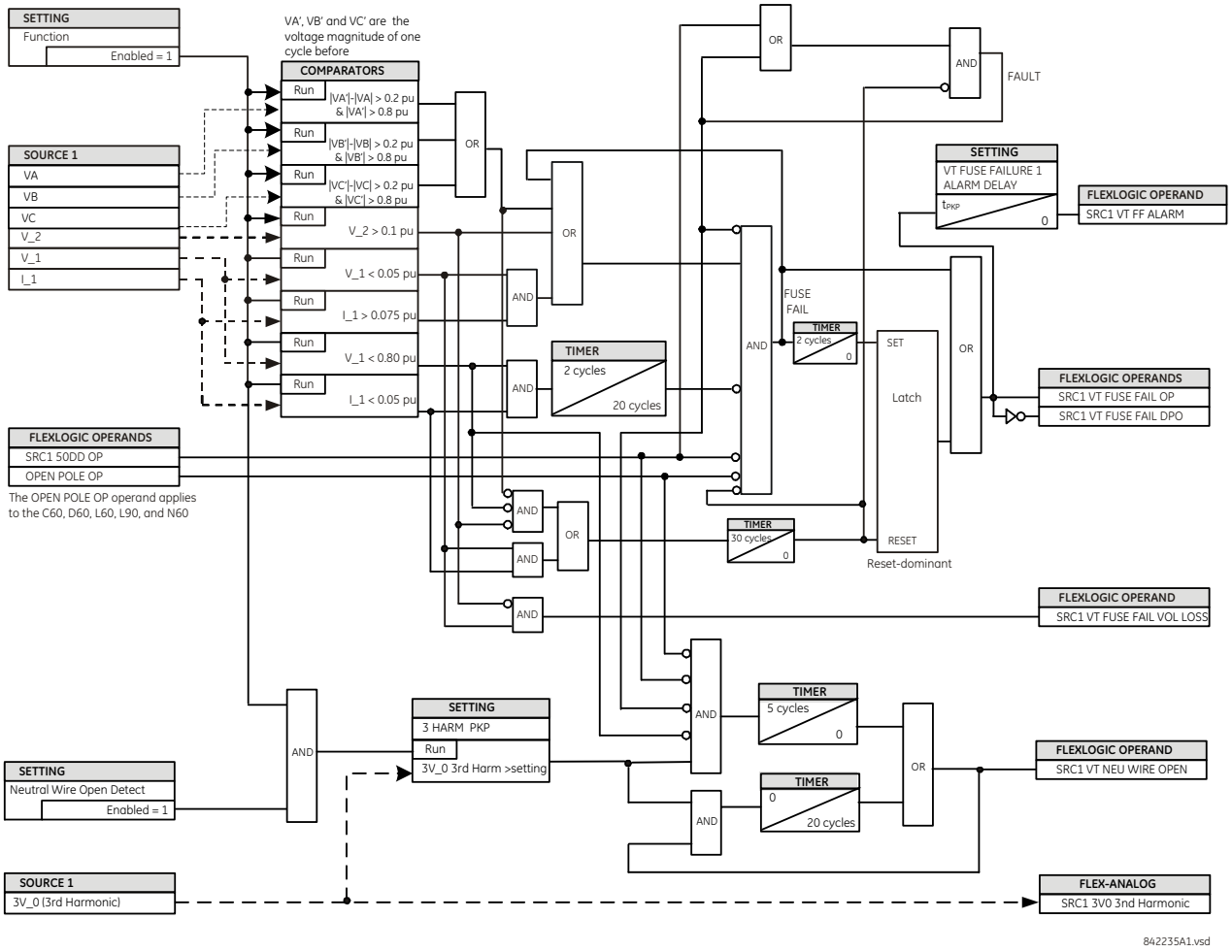

5.9.10.6 Thermal overload protection (ANSI 49)

SETTINGS ⇨⇩ CONTROL ELEMENTS ⇨⇩ MONITORING ELEMENTS ⇨⇩ THERMAL OVERLOAD PROTECTION ⇨⇩ THERMAL PROTECTION 1(2)

■ THERMAL ■ PROTECTION 1	⇔	**THERMAL PROTECTION 1 FUNCTION: Disabled**	Range: Disabled, Enabled
	⇩	**THERMAL PROTECTION 1 SOURCE: SRC1**	Range: SRC 1, SRC 2, SRC 3, SRC 4, SRC 5, SRC 6
	⇩	**THERMAL PROTECTION 1 BASE CURR: 0.80 pu**	Range: 0.20 to 3.00 pu in steps of 0.01
	⇩	**THERMAL PROTECTION 1 k FACTOR: 1.10**	Range: 1.00 to 1.20 in steps of 0.05
	⇩	**THERM PROT 1 TRIP TIME CONST: 45 min**	Range: 0 to 1000 min. in steps of 1
	⇩	**THERM PROT 1 RESET TIME CONST: 45 min**	Range: 0 to 1000 min. in steps of 1
	⇩	**THERM PROT 1 MINIM RESET TIME: 20 min**	Range: 0 to 1000 min. in steps of 1
	⇩	**THERM PROT 1 RESET: Off**	Range: FlexLogic operand
	⇩	**THERM PROT 1 BLOCK: Off**	Range: FlexLogic operand
	⇩	**THERMAL PROTECTION 1 TARGET: Self-reset**	Range: Self-reset, Latched, Disabled
	⇧	**THERMAL PROTECTION 1 EVENTS: Disabled**	Range: Disabled, Enabled

The thermal overload protection element corresponds to the IEC 255-8 standard and is used to detect thermal overload conditions in protected power system elements. Choosing an appropriate time constant element can be used to protect different elements of the power system. The cold curve characteristic is applied when the estimated I_p current is less than 10% of the base current. If I_p current is greater or equal than 10% than the base current, then the hot curve characteristic is applied. I_p current is estimated with a fixed time constant for both cooling and heating that reaches to the final value in two seconds on a step change (either step up or step down) signal.

The IEC255-8 cold curve is defined as follows:

$$t_{op} = \tau_{op} \times \ln\left(\frac{I^2}{I^2 - (k \times I_B)^2}\right) \qquad \textbf{Eq. 5-22}$$

The IEC255-8 hot curve is defined as follows:

$$t_{op} = \tau_{op} \times \ln\left(\frac{I^2 - I_p^2}{I^2 - (k \times I_B)^2}\right) \qquad \textbf{Eq. 5-23}$$

where

t_{op} = time to operate
τ_{op} = thermal protection trip time constant
I = measured overload RMS current
I_p = measured load RMS current before overload occurs
k = IEC 255-8 k-factor applied to I_B, defining maximum permissible current above nominal current
I_B = protected element base (nominal) current

To ensure element accuracy for high overcurrent conditions, the maximum value of $I/(k \times I_B)$ is limited to 8, even when realistically it is exceeding this value.

The reset time of the thermal overload protection element is also time delayed using following formula:

$$t_{rst} = \tau_{rst} \times \ln\left(\frac{(k \times I_B)^2}{\left|I^2 - (k \times I_B)^2\right|}\right) + T_{min}$$

Eq. 5-24

where

τ_{rst} = thermal protection trip time constant
T_{min} = a minimum reset time setting

Figure 5-171: IEC 255-8 sample operate and reset curves

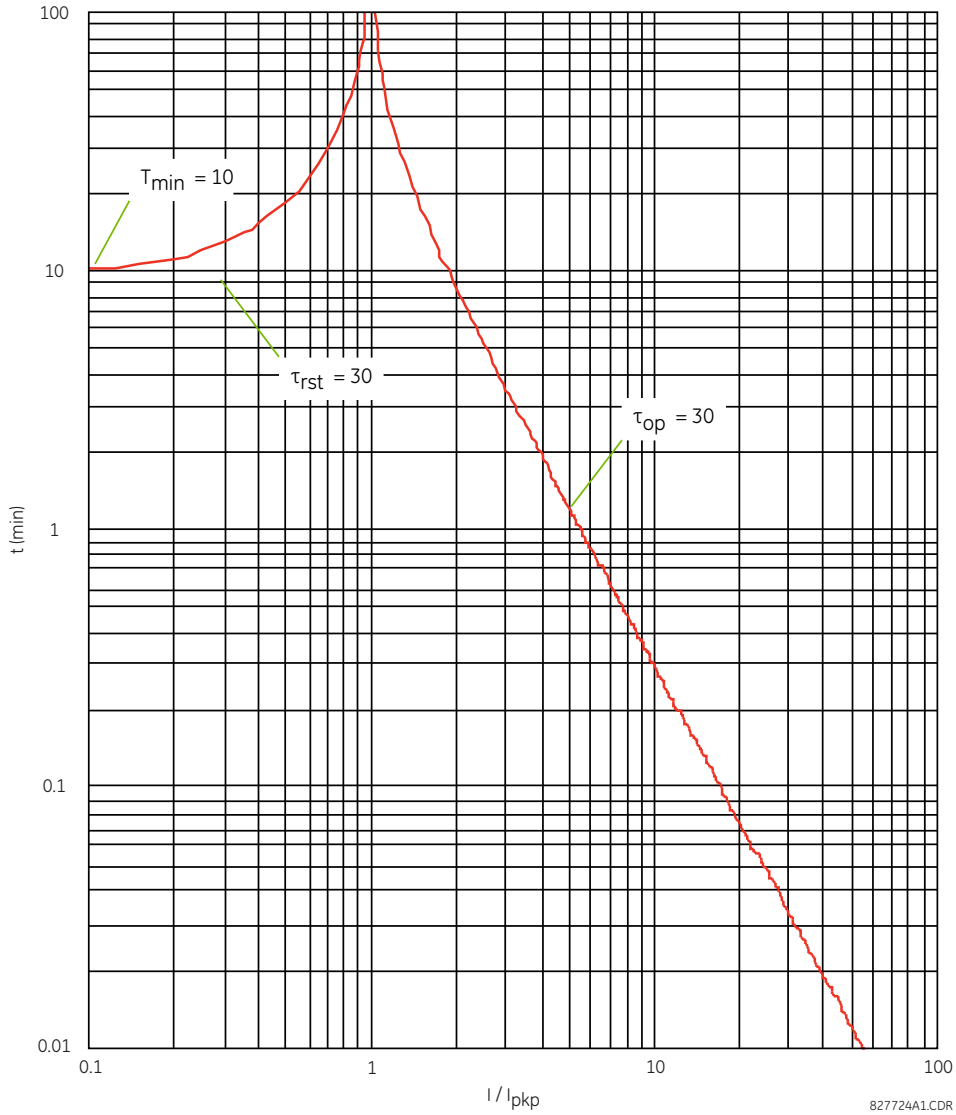

The thermal overload protection element estimates accumulated thermal energy E using the following equations calculated each power cycle. When current is greater than the pickup level, $I_n > k \times I_B$, element starts increasing the thermal energy:

$$E_n = E_{n-1} + \frac{\Delta t}{t_{op(In)}}$$

Eq. 5-25

When current is less than the dropout level, $I_n > 0.97 \times k \times I_B$, the element starts decreasing the thermal energy:

$$E_n = E_{n-1} - \frac{\Delta t}{t_{rst(In)}} \qquad \textbf{Eq. 5-26}$$

where

Δt is the power cycle duration
n is the power cycle index
$t_{op(In)}$ is the trip time calculated at index n as per the IEC255-8 cold curve or hot curve equations
$t_{rst(In)}$ is the reset time calculated at index n as per the reset time equation
I_n is the measured overload RMS current at index n
E_n is the accumulated energy at index n
E_{n-1} is the accumulated energy at index n – 1

The thermal overload protection element removes the THERMAL PROT 1 OP output operand when E < 0.05. In case of emergency, the thermal memory and THERMAL PROT 1 OP output operand can be reset using **THERM PROT 1 RESET** setting. All calculations are performed per phase. If the accumulated energy reaches value 1 in any phase, the thermal overload protection element operates and only resets when energy is less than 0.05 in all three phases.

Table 5-40: Typical time constants

Protected equipment	Time constant	Minimum reset time
Capacitor bank	10 minutes	30 minutes
Overhead line	10 minutes	20 minutes
Air-core reactor	40 minutes	30 minutes
Busbar	60 minutes	20 minutes
Underground cable	20 to 60 minutes	60 minutes

The figure shows the logic for the thermal overload protection element.

Figure 5-172: Thermal overload protection logic

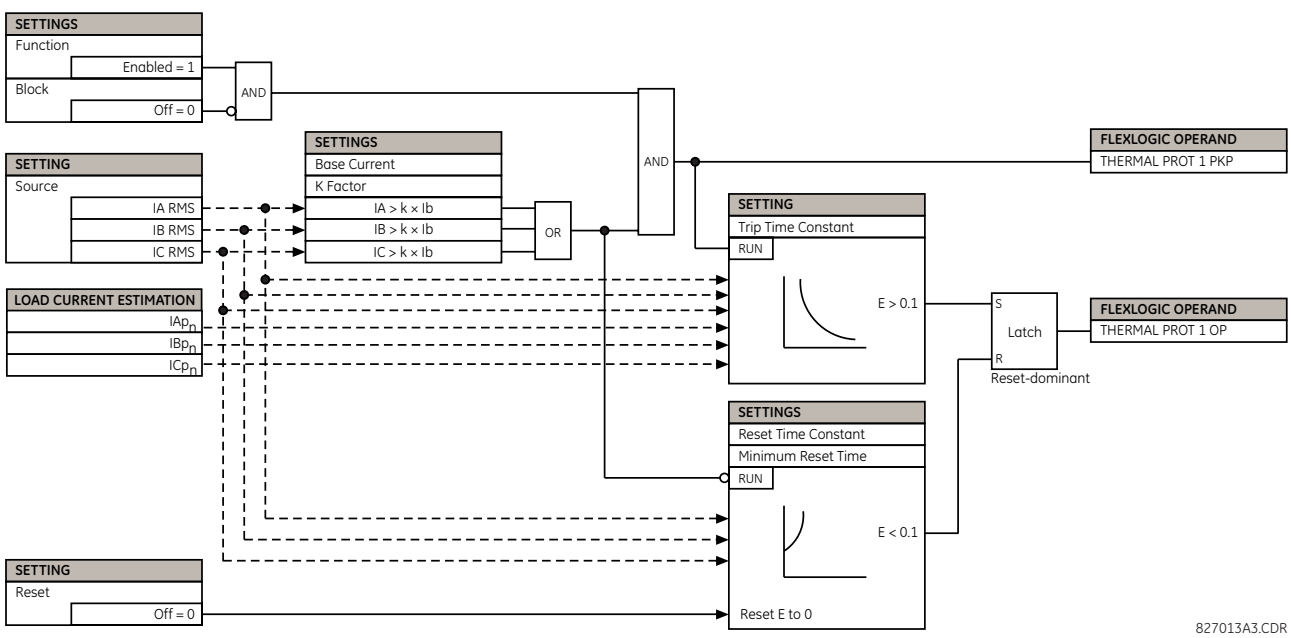

5.10 Inputs/outputs

5.10.1 Contact inputs

SETTINGS ⇨⇩ INPUTS / OUTPUTS ⇨ CONTACT INPUTS

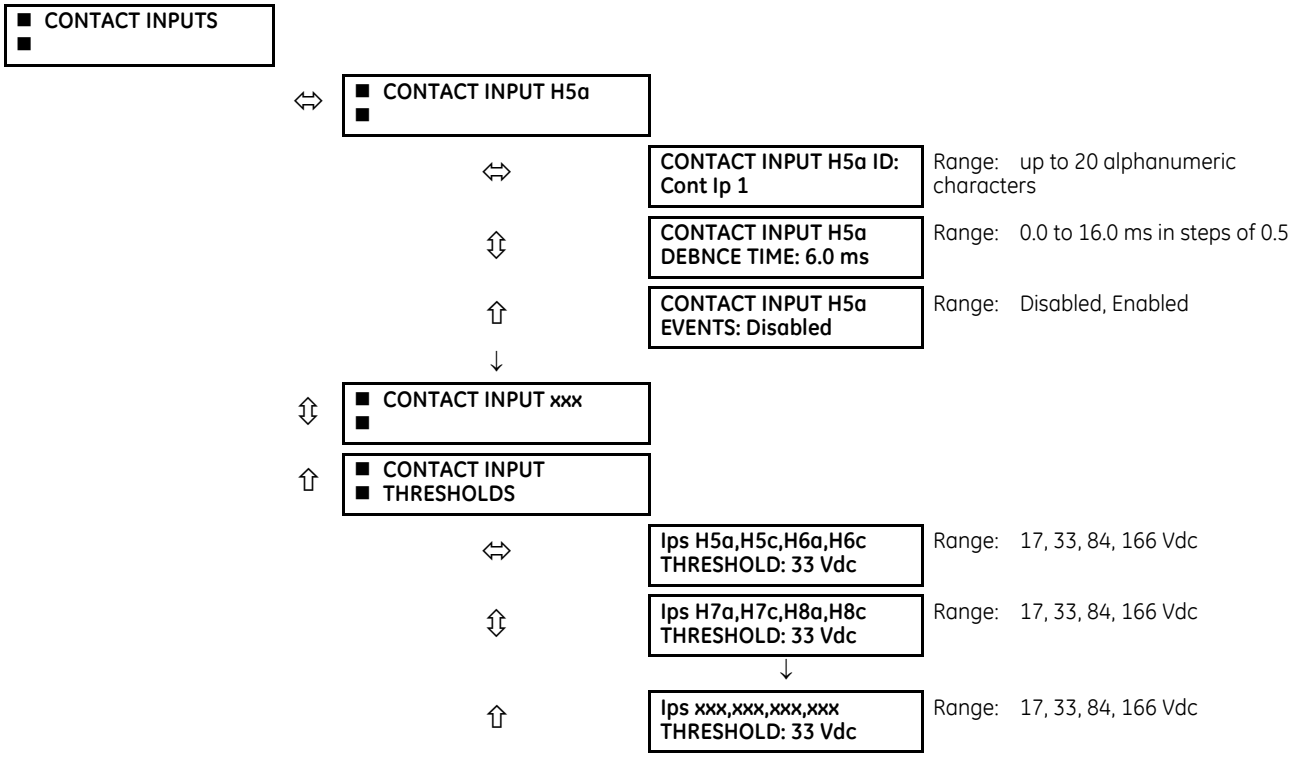

Contact inputs and outputs are digital signals associated with connections to hard-wired contacts. Wet and dry contacts are supported.

The contact inputs menu contains configuration settings for each contact input as well as voltage thresholds for each group of four contact inputs. Upon startup, the relay processor determines (from an assessment of the installed modules) which contact inputs are available and then display settings for only those inputs.

An alphanumeric ID can be assigned to a contact input for diagnostic, setting, and event recording purposes. The CONTACT IP X On (Logic 1) FlexLogic operand corresponds to contact input "X" being closed, while CONTACT IP X Off corresponds to contact input "X" being open. The **CONTACT INPUT DEBNCE TIME** defines the time required for the contact to overcome 'contact bouncing' conditions. As this time differs for different contact types and manufacturers, set it as a maximum contact debounce time (per manufacturer specifications) plus some margin to ensure proper operation. If **CONTACT INPUT EVENTS** is set to "Enabled," every change in the contact input state triggers an event.

A raw status is scanned for all Contact Inputs synchronously at the constant rate of 0.5 ms as shown in the following figure. The DC input voltage is compared to a user-settable threshold. A new contact input state must be maintained for a user-settable debounce time in order for the Product to validate the new contact state. In the following figure, the debounce time is set at 2.5 ms; thus the 6th sample in a row validates the change of state (mark no. 1 in the diagram). Once validated (de-bounced), the contact input asserts a corresponding FlexLogic operand and logs an event as per user setting.

A time stamp of the first sample in the sequence that validates the new state is used when logging the change of the contact input into the Event Recorder (mark no. 2 in the figure).

Protection and control elements, as well as FlexLogic equations and timers, are executed eight times in a power system cycle. The protection pass duration is controlled by the frequency tracking mechanism. The FlexLogic operand reflecting the debounced state of the contact is updated at the protection pass following the validation (marks no. 3 and 4 on the figure that follows). The update is performed at the beginning of the protection pass so all protection and control functions, as well as FlexLogic equations, are fed with the updated states of the contact inputs.

The FlexLogic operand response time to the contact input change is equal to the debounce time setting plus up to one protection pass (variable and depending on system frequency if frequency tracking enabled). If the change of state occurs just after a protection pass, the recognition is delayed until the subsequent protection pass; that is, by the entire duration of the protection pass. If the change occurs just prior to a protection pass, the state is recognized immediately. Statistically a delay of half the protection pass is expected. Owing to the 0.5 ms scan rate, the time resolution for the input contact is below 1 ms.

For example, eight protection passes per cycle on a 60 Hz system correspond to a protection pass every 2.1 ms. With a contact debounce time setting of 3.0 ms, the FlexLogic operand-assert time limits are: 3.0 + 0.0 = 3.0 ms and 3.0 + 2.1 = 5.1 ms. These time limits depend on how soon the protection pass runs after the debouncing time.

Regardless of the contact debounce time setting, the contact input event is time-stamped with a 1 ms accuracy using the time of the first scan corresponding to the new state (mark no. 2 shown). Therefore, the time stamp reflects a change in the DC voltage across the contact input terminals that was not accidental as it was subsequently validated using the debounce timer. Keep in mind that the associated FlexLogic operand is asserted/de-asserted later, after validating the change.

The debounce algorithm is symmetrical: the same procedure and debounce time are used to filter the LOW-HIGH (marks no.1, 2, 3, and 4 in the figure) and HIGH-LOW (marks no. 5, 6, 7, and 8) transitions.

Figure 5-173: Input contact debouncing mechanism and time stamp sample timing

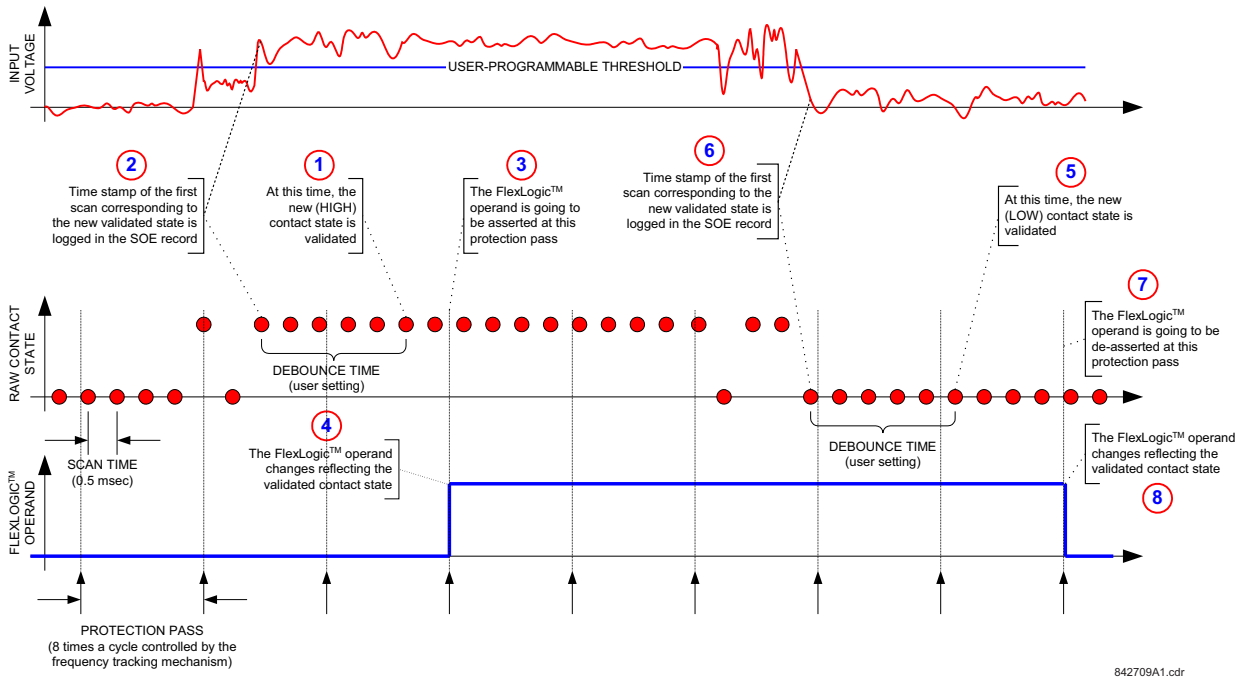

Contact inputs are isolated in groups of four to allow connection of wet contacts from different voltage sources for each group. The **CONTACT INPUT THRESHOLDS** determine the minimum voltage required to detect a closed contact input. This value is selected according to the following criteria: 17 for 24 V sources, 33 for 48 V sources, 84 for 110 to 125 V sources and 166 for 250 V sources.

For example, to use contact input H5a as a status input from the breaker 52b contact to seal-in the trip relay and record it in the Event Records menu, make the following settings changes:

CONTACT INPUT H5a ID: "Breaker Closed (52b)"
CONTACT INPUT H5a EVENTS: "Enabled"

Note that the 52b contact is closed when the breaker is open and open when the breaker is closed.

5.10.2 Virtual inputs

SETTINGS ⇨⇩ INPUTS/OUTPUTS ⇨⇩ VIRTUAL INPUTS ⇨ VIRTUAL INPUT 1(128)

■ **VIRTUAL INPUT 1** ■	⇔	**VIRTUAL INPUT 1** **FUNCTION: Disabled**	Range: Disabled, Enabled
	⇩	**VIRTUAL INPUT 1 ID:** **Virt Ip 1**	Range: up to 20 alphanumeric characters
	⇩	**VIRTUAL INPUT 1** **TYPE: Latched**	Range: Self-Reset, Latched
	⇩	**VIRTUAL INPUT 1** **EVENTS: Disabled**	Range: Disabled, Enabled

The virtual inputs and outputs are digital signals associated with UR-series internal logic signals. Virtual inputs include signals generated by the local user interface. The virtual outputs are outputs of FlexLogic equations used to customize the device. Virtual outputs can also serve as virtual inputs to FlexLogic equations.

The virtual inputs can be individually programmed to respond to input signals from the keypad (via the **COMMANDS** menu) and communications protocols. All virtual input operands are defaulted to "Off" (logic 0) unless the appropriate input signal is received.

If the **VIRTUAL INPUT x FUNCTION** is to "Disabled," the input is forced to off (logic 0) regardless of any attempt to alter the input. If set to "Enabled," the input operates as shown on the logic diagram and generates output FlexLogic operands in response to received input signals and the applied settings.

There are two types of operation: self-reset and latched. If **VIRTUAL INPUT x type** is "Self-Reset," when the input signal transits from off to on, the output operand is set to on for only one evaluation of the FlexLogic equations and then return to off. If set to "Latched," the virtual input sets the state of the output operand to the same state as the most recent received input.

The self-reset operating mode generates the output operand for a single evaluation of the FlexLogic equations. If the operand is to be used anywhere other than internally in a FlexLogic equation, it likely needs to be lengthened in time. A FlexLogic timer with a delayed reset can perform this function.

Figure 5-174: Virtual inputs logic

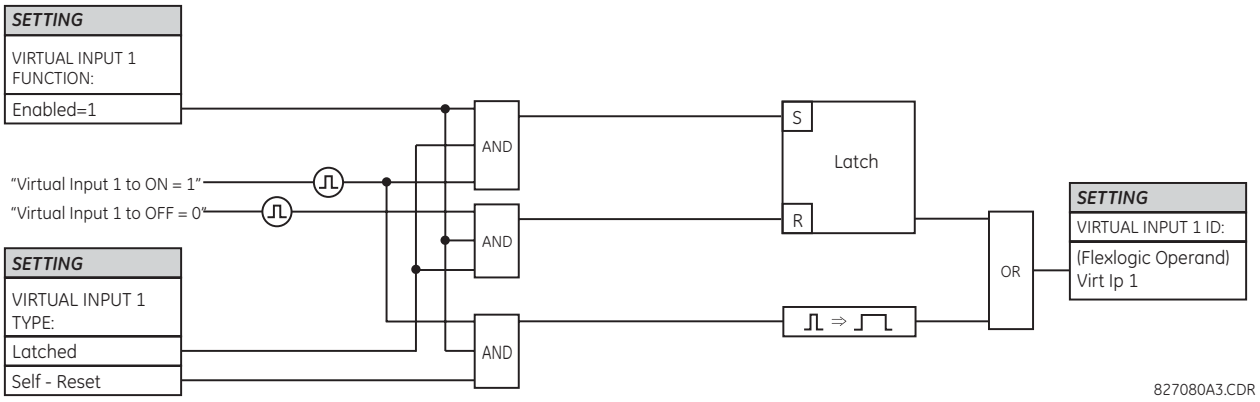

5.10.3 Contact outputs

5.10.3.1 Digital outputs

SETTINGS ⇨⇩ INPUTS/OUTPUTS ⇨⇩ CONTACT OUTPUTS ⇨⇩ CONTACT OUTPUT H1

■ **CONTACT OUTPUT H1** ■	⇔	**CONTACT OUTPUT H1 ID** **Cont Op 1**	Range: up to 20 alphanumeric characters
	⇩	**OUTPUT H1 OPERATE:** **Off**	Range: FlexLogic operand
	⇩	**OUTPUT H1 SEAL-IN:** **Off**	Range: FlexLogic operand
	⇧	**CONTACT OUTPUT H1** **EVENTS: Enabled**	Range: Disabled, Enabled

A contact inputs and outputs are digital signals associated with connections to hard-wired contacts. Wet and dry contacts are supported.

Upon startup of the relay, the main processor determines from an assessment of the modules installed in the chassis which contact outputs are available and then presents the settings for only these outputs. Where the contact input is non-latching, the settings are as shown.

An ID can be assigned to each contact output. The signal that can OPERATE a contact output can be any FlexLogic operand (virtual output, element state, contact input, or virtual input). An additional FlexLogic operand can be used to SEAL-IN the relay. Any change of state of a contact output can be logged as an Event if programmed to do so.

For example, the trip circuit current is monitored by providing a current threshold detector in series with some Form-A contacts (see the trip circuit example in the Digital Elements section). The monitor sets a flag (see the specifications for Form-A). The name of the FlexLogic operand set by the monitor, consists of the output relay designation, followed by the name of the flag; for example, Cont OP 1 IOn.

In most breaker control circuits, the trip coil is connected in series with a breaker auxiliary contact used to interrupt current flow after the breaker has tripped, to prevent damage to the less robust initiating contact. This can be done by monitoring an auxiliary contact on the breaker which opens when the breaker has tripped, but this scheme is subject to incorrect operation caused by differences in timing between breaker auxiliary contact change-of-state and interruption of current in the trip circuit. The most dependable protection of the initiating contact is provided by directly measuring current in the tripping circuit, and using this parameter to control resetting of the initiating relay. This scheme is often called trip seal-in.

This can be realized using the Cont OP 1 IOn FlexLogic operand to seal-in the contact output as follows:

CONTACT OUTPUT H1 ID: "Cont Op 1"
OUTPUT H1 OPERATE: any suitable FlexLogic operand
OUTPUT H1 SEAL-IN: "Cont Op 1 IOn"
CONTACT OUTPUT H1 EVENTS: "Enabled"

Figure 5-175: Contact input/output module type 6A contact 1 logic

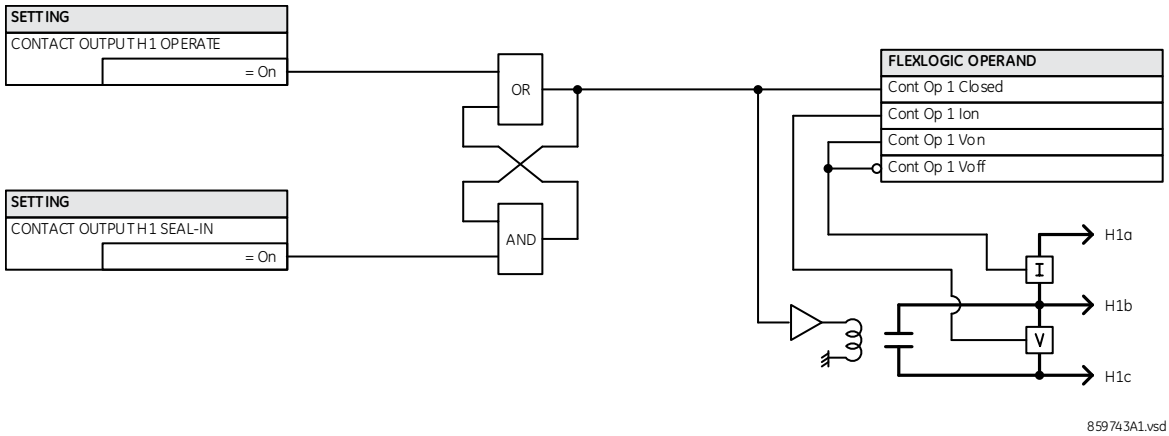

5.10.3.2 Latching outputs

SETTINGS ⇨⇩ INPUTS/OUTPUTS ⇨⇩ CONTACT OUTPUTS ⇨ CONTACT OUTPUT H1a

■ **CONTACT OUTPUT H1a** ■	⇔	**CONTACT OUTPUT H1a ID** **L-Cont Op 1**	Range: up to 20 alphanumeric characters
	⇩	**OUTPUT H1a OPERATE:** **Off**	Range: FlexLogic operand
	⇩	**OUTPUT H1a RESET:** **Off**	Range: FlexLogic operand
	⇩	**OUTPUT H1a SEAL-IN:** **Off**	Range: FlexLogic operand
	⇩	**OUTPUT H1a TYPE:** **Operate-dominant**	Range: Operate-dominant, Reset-dominant
	⇧	**CONTACT OUTPUT H1a** **EVENTS: Disabled**	Range: Disabled, Enabled

The latching output contacts are mechanically bi-stable and controlled by two separate (open and close) coils. As such they retain their position even if the relay is not powered up. The relay recognizes all latching output contact cards and populates the setting menu accordingly. On power up, the relay reads positions of the latching contacts from the hardware before executing any other functions of the relay (such as protection and control features or FlexLogic).

The latching output modules, either as part of the relay or as individual modules, are shipped from the factory with all latching contacts open. It is highly recommended to double-check the programming and positions of the latching contacts when replacing a module.

Since the relay asserts the output contact and reads back its position, it is possible to incorporate self-monitoring capabilities for the latching outputs. If any latching outputs exhibits a discrepancy, the LATCHING OUTPUT ERROR self-test error is declared. The error is signaled by the LATCHING OUT ERROR FlexLogic operand, event, and target message.

Settings shown use H1a as an example. The menu varies; not all fields shown display.

OUTPUT H1a OPERATE — This setting specifies a FlexLogic operand to operate the 'close coil' of the contact. The relay seals-in this input to safely close the contact. Once the contact is closed and the **RESET** input is logic 0 (off), any activity of the **OPERATE** input, such as subsequent chattering, does not have any effect. With both the **OPERATE** and **RESET** inputs active (logic 1), the response of the latching contact is specified by the **OUTPUT H1a TYPE** setting.

OUTPUT H1a RESET or SEAL-IN — This setting specifies a FlexLogic operand to operate the 'trip coil' of the contact. The relay seals-in this input to safely open the contact. Once the contact is opened and the **OPERATE** input is logic 0 (off), any activity of the **RESET** input, such as subsequent chattering, does not have any effect. With both the **OPERATE** and **RESET** inputs active (logic 1), the response of the latching contact is specified by the **OUTPUT H1a TYPE** setting.

OUTPUT H1a TYPE — This setting specifies the contact response under conflicting control inputs; that is, when both the **OPERATE** and **RESET** signals are applied. With both control inputs applied simultaneously, the contact closes if set to "Operate-dominant" and opens if set to "Reset-dominant."

Figure 5-176: Contact input/output module type 4L contact 1 logic

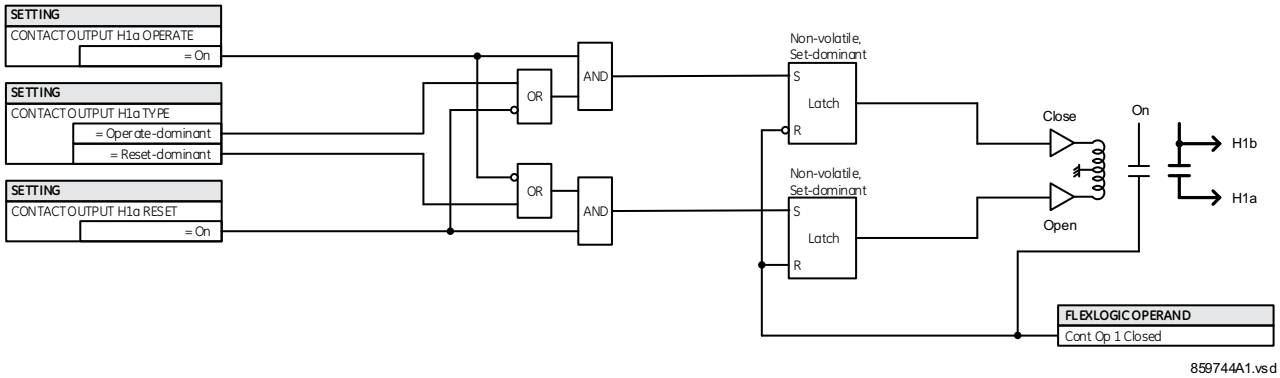

Application example 1

A latching output contact H1a is to be controlled from two user-programmable pushbuttons (buttons number 1 and 2). The following settings are applied.

Program the Latching Outputs by making the following changes in the **SETTINGS ⇨⇩ INPUTS/OUTPUTS ⇨⇩ CONTACT OUTPUTS ⇨ CONTACT OUTPUT H1a** menu (assuming an H4L module):

OUTPUT H1a OPERATE: "PUSHBUTTON 1 ON"
OUTPUT H1a RESET: "PUSHBUTTON 2 ON"

Program the pushbuttons by making the following changes in the **PRODUCT SETUP ⇨⇩ USER-PROGRAMMABLE PUSHBUTTONS ⇨⇩ USER PUSHBUTTON 1** and **USER PUSHBUTTON 2** menus:

PUSHBUTTON 1 FUNCTION: "Self-reset"
PUSHBTN 1 DROP-OUT TIME: "0.00 s"
PUSHBUTTON 2 FUNCTION: "Self-reset"
PUSHBTN 2 DROP-OUT TIME: "0.00 s"

Application example 2

A relay, having two latching contacts H1a and H1c, is to be programmed. The H1a contact is to be a Type-a contact, while the H1c contact is to be a Type-b contact (Type-a means closed after exercising the operate input; Type-b means closed after exercising the reset input). The relay is to be controlled from virtual outputs: VO1 to operate and VO2 to reset.

Program the Latching Outputs by making the following changes in the **SETTINGS ⇨⇩ INPUTS/OUTPUTS ⇨⇩ CONTACT OUTPUTS ⇨ CONTACT OUTPUT H1a** and **CONTACT OUTPUT H1c** menus (assuming an H4L module):

OUTPUT H1a OPERATE: "VO1"
OUTPUT H1a RESET: "VO2"
OUTPUT H1c OPERATE: "VO2"
OUTPUT H1c RESET: "VO1"

Since the two physical contacts in this example are mechanically separated and have individual control inputs, they do not operate at exactly the same time. A discrepancy in the range of a fraction of a maximum operating time can occur. Therefore, a pair of contacts programmed to be a multi-contact relay do not guarantee any specific sequence of operation (such as make before break). If required, the sequence of operation must be programmed explicitly by delaying some of the control inputs as shown in the next application example.

Application example 3

A make before break functionality must be added to the preceding example. An overlap of 20 ms is required to implement this functionality.

Write the following FlexLogic equation (EnerVista example shown).

FlexLogic Equation Editor // D60_490.urs : C:\Program Files\GE Multilin\EnerVist...

Save | Restore | Default

FLEXLOGIC ENTRY	TYPE	SYNTAX
View Graphic	View	View
FlexLogic Entry 1	Virtual Outputs On	Virt Op 1 On (VO1)
FlexLogic Entry 2	TIMER	Timer 1
FlexLogic Entry 3	Assign Virtual Output	= Virt Op 3 (VO3)
FlexLogic Entry 4	Virtual Outputs On	Virt Op 2 On (VO2)
FlexLogic Entry 5	TIMER	Timer 2
FlexLogic Entry 6	Assign Virtual Output	= Virt Op 4 (VO4)
FlexLogic Entry 7	End of List	

D60_490.urs FlexLogic

Set both timers (Timer 1 and Timer 2) to 20 ms pickup and 0 ms dropout.

Program the Latching Outputs by making the following changes in the **SETTINGS ⇨⇩ INPUTS/OUTPUTS ⇨⇩ CONTACT OUTPUTS ⇨ CONTACT OUTPUT H1a** and **CONTACT OUTPUT H1c** menus (assuming an H4L module):

OUTPUT H1a OPERATE: "VO1"
OUTPUT H1a RESET: "VO4"
OUTPUT H1c OPERATE: "VO2"
OUTPUT H1c RESET: "VO3"

Application example 4

A latching contact H1a is to be controlled from a single virtual output VO1. The contact is to remain closed as long as VO1 is high, and is to remain opened when VO1 is low. Program the relay as follows.

Write the following FlexLogic equation (EnerVista example shown).

FlexLogic Equation Editor // D60_490.urs : C:\Program Files\GE Multilin\EnerVist...

Save | Restore | Default | Reset

FLEXLOGIC ENTRY	TYPE	SYNTAX
View Graphic	View	View
FlexLogic Entry 1	Virtual Outputs On	Virt Op 1 On (VO1)
FlexLogic Entry 2	NOT	1 Input
FlexLogic Entry 3	Assign Virtual Output	= Virt Op 2 (VO2)
FlexLogic Entry 4	End of List	

D60_490.urs FlexLogic

Program the Latching Outputs by making the following changes in the **SETTINGS ⇨⇩ INPUTS/OUTPUTS ⇨⇩ CONTACT OUTPUTS ⇨ CONTACT OUTPUT H1a** menu (assuming an H4L module):

OUTPUT H1a OPERATE: "VO1"
OUTPUT H1a RESET: "VO2"

5.10.4 Virtual outputs

SETTINGS ⇨⇩ INPUTS/OUTPUTS ⇨⇩ VIRTUAL OUTPUTS ⇨ VIRTUAL OUTPUT 1(128)

■ **VIRTUAL OUTPUT 1** ■	⇔	**VIRTUAL OUTPUT 1 ID** **Virt Op 1**	Range: up to 20 alphanumeric characters
	⇧	**VIRTUAL OUTPUT 1** **EVENTS: Disabled**	Range: Disabled, Enabled

The virtual inputs and outputs are digital signals associated with UR-series internal logic signals. Virtual inputs include signals generated by the local user interface. The virtual outputs are outputs of FlexLogic equations used to customize the device. Virtual outputs can also serve as virtual inputs to FlexLogic equations.

The virtual outputs can be assigned using FlexLogic. If not assigned, the output is forced to 'OFF' (Logic 0). An ID also can be assigned to each virtual output. Virtual outputs are resolved in each pass through the evaluation of the FlexLogic equations. Any change of state of a virtual output can be logged as an event if programmed to do so.

For example, if Virtual Output 1 is the trip signal from FlexLogic and the trip relay is used to signal events, the settings is programmed as follows:

VIRTUAL OUTPUT 1 ID: "Trip"
VIRTUAL OUTPUT 1 EVENTS: "Disabled"

5.10.5 Resetting

5.10.5.1 Enhanced and basic front panels

SETTINGS ⇨⇩ INPUTS/OUTPUTS ⇨⇩ RESETTING

■ **RESETTING** ■	⇔	**RESET OPERAND:** **Off**	Range: FlexLogic operand

5.10.5.2 Graphical front panel

SETTINGS ⇨⇩ INPUTS/OUTPUTS ⇨⇩ RESETTING

■ **RESETTING** ■	⇔	**RESET OPERAND:** **Off**	Range: FlexLogic operand
	⇧	**RESET ANNUNCIATOR:** **Off**	Range: FlexLogic operand

Some events can be programmed to latch the front panel LED event indicators, target messages, and/or graphical front panel annunciator windows. Once set, the latching mechanism holds the latched indicators, messages, or windows in the set state after the initiating condition has cleared until a **RESET** command is received to return these latches (not including FlexLogic latches) to the reset state where the initiating condition has cleared. The **RESET** command can be sent from the front panel **RESET** button, a remote device via a communications channel, or any selected operand. The Modbus execute function 05h with operation code 1 command is also available to perform the same function as the front panel **RESET** key.

RESET OPERAND — The three sources of **RESET** commands each activates the RESET OP FlexLogic operand. Each individual source of a **RESET** command also activates its individual operand RESET OP (PUSHBUTTON), RESET OP (COMMS), or RESET OP (OPERAND) to identify the source of the command. Each of these three operands generates an event in the event record when activated. The **RESET OPERAND** setting here selects the operand that activates the RESET OP (OPERAND) operand.

RESET ANNUNCIATOR — Used to select a FlexLogic operand that when activated acknowledges/resets all annunciator windows on the graphical front panel. The other methods to acknowledge/reset annunciator windows include:

- On the displayed page, press the **RESET** pushbutton with none of the annunciator windows selected to acknowledge/reset all annunciator windows on that page
- To acknowledge/reset a specific annunciator window, use the Up, Down, Left and Right pushbuttons to select the window, and press the **RESET** or **ENTER** pushbutton
- All annunciator windows can be reset remotely by programming a Virtual Input (for example Virtual Input 1) as the input to the **RESET ANNUNCIATOR** setting. Then the Modbus execute function 05h with operation code 1000h command (or function 10h with address 400h) is used to set the state of Virtual Input 1.

For the **RESET ANNUNCIATOR** setting, the RESET ANCTR OP FlexLogic operand is activated by the two sources of **RESET** command, operand source and manual source. Each individual source of a **RESET ANNUNCIATOR** command also activates its individual operand RESET OP (OPRD) or RESET ANCTR OP (MNUL) to identify the source of the command. Each of these two operands generates an event in the event record when activated. The setting here selects the operand that activates the RESET ANCTR OP (OPRD) operand. The **RESET** pushbutton on the front panel or the reset command from the software activates the RESET ANCTR OP (MNUL) operand.

5.10.6 Direct inputs and outputs

5.10.6.1 Direct inputs

SETTINGS ⇨⇩ INPUTS/OUTPUTS ⇨⇩ DIRECT INPUTS ⇨ DIRECT INPUT 1(32)

■ DIRECT INPUT 1 ■	⇔	DIRECT INPUT 1 NAME: Dir Ip 1	Range: up to 12 alphanumeric characters
	⇩	DIRECT INPUT 1 DEVICE ID: 0	Range: 0 to 16
	⇩	DIRECT INPUT 1 BIT NUMBER: 0	Range: 0 to 32
	⇩	DIRECT INPUT 1 DEFAULT: Off	Range: On, Off, Latest/On, Latest/Off
	⇧	DIRECT INPUT 1 EVENTS: Disabled	Range: Enabled, Disabled

These settings specify how the direct input information is processed.

DIRECT INPUT 1 NAME — This setting allows the user to assign a descriptive name to the direct input.

DIRECT INPUT 1 DEVICE ID — Represents the source of direct input 1. The specified direct input is driven by the device identified here.

DIRECT INPUT 1 BIT NUMBER — The bit number to extract the state for direct input 1. Direct Input 1 is driven by the bit identified as **DIRECT INPUT 1 BIT NUMBER**. This corresponds to the direct output number of the sending device.

DIRECT INPUT 1 DEFAULT STATE — Represents the state of the direct input when the associated direct device is offline. The following choices are available:

- On — Defaults the input to Logic 1
- Off — Defaults the input to Logic 0
- Latest/On — Freezes the input in case of lost communications. When the latest state is not known, such as after relay power-up but before the first communication exchange, the input defaults to Logic 1. When communication resumes, the input becomes fully operational.
- Latest/Off — Freezes the input in case of lost communications. When the latest state is not known, such as after relay power-up but before the first communication exchange, the input defaults to Logic 0. When communication resumes, the input becomes fully operational.

5.10.6.2 Direct outputs

SETTINGS ⇨⇩ INPUTS/OUTPUTS ⇨⇩ DIRECT OUTPUTS ⇨ DIRECT OUTPUT 1(32)

■ DIRECT OUTPUT 1 ■	⇔	DIRECT OUT 1 NAME: Dir Out 1	Range: up to 12 alphanumeric characters
	⇩	DIRECT OUT 1 OPERAND: Off	Range: FlexLogic operand
	⇧	DIRECT OUTPUT 1 EVENTS: Disabled	Range: Enabled, Disabled

DIRECT OUT 1 NAME — This setting allows the user to assign a descriptive name to the direct output.

DIR OUT 1 OPERAND — This sets the FlexLogic operand that determines the state of this direct output.

5.10.6.3 Application examples

The examples introduced in the earlier Direct Inputs and Outputs section (part of the Product Setup section) are continued here to illustrate usage of the direct inputs and outputs.

Example 1: Extending input/output capabilities of a UR relay

Consider an application that requires additional quantities of contact inputs or output contacts or lines of programmable logic that exceed the capabilities of a single UR-series chassis. The problem is solved by adding an extra UR-series IED, such as the C30, to satisfy the additional inputs/outputs and programmable logic requirements. The figure shows that two IEDs are connected via single-channel digital communication cards.

Figure 5-177: Input and output extension via direct inputs and outputs

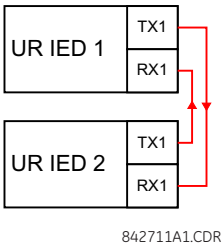

Assume that contact input 1 from UR IED 2 is to be used by UR IED 1. The following settings are applied (Direct Input 5 and bit number 12 are used, as an example).

UR IED 1:

DIRECT INPUT 5 DEVICE ID = "2"
DIRECT INPUT 5 BIT NUMBER = "12"

UR IED 2:

DIRECT OUT 12 OPERAND = "Cont Ip 1 On"

The Cont Ip 1 On operand of UR IED 2 is now available in UR IED 1 as DIRECT INPUT 5 ON.

5

Example 2: Interlocking busbar protection

A simple interlocking busbar protection scheme can be accomplished by sending a blocking signal from downstream devices, say 2, 3 and 4, to the upstream device that monitors a single incomer of the busbar, as shown in the figure.

Figure 5-178: Sample interlocking busbar protection scheme

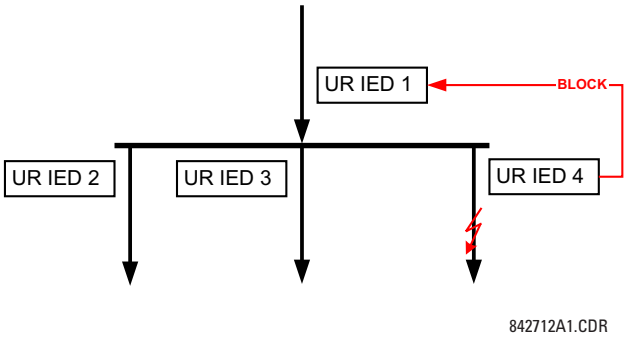

Assume that Phase Instantaneous Overcurrent 1 is used by Devices 2, 3, and 4 to block Device 1. If not blocked, Device 1 trips the bus upon detecting a fault and applying a short coordination time delay.

The following settings are applied (assume Bit 3 is used by all 3 devices to send the blocking signal and Direct Inputs 7, 8, and 9 are used by the receiving device to monitor the three blocking signals).

UR IED 2:

DIRECT OUT 3 OPERAND: "PHASE IOC1 OP"

UR IED 3:

DIRECT OUT 3 OPERAND: "PHASE IOC1 OP"

UR IED 4:

DIRECT OUT 3 OPERAND: "PHASE IOC1 OP"

UR IED 1:

DIRECT INPUT 7 DEVICE ID: "2"
DIRECT INPUT 7 BIT NUMBER: "3"
DIRECT INPUT 7 DEFAULT STATE: select "On" for security, select "Off" for dependability

DIRECT INPUT 8 DEVICE ID: "3"
DIRECT INPUT 8 BIT NUMBER: "3"
DIRECT INPUT 8 DEFAULT STATE: select "On" for security, select "Off" for dependability

DIRECT INPUT 9 DEVICE ID: "4"
DIRECT INPUT 9 BIT NUMBER: "3"
DIRECT INPUT 9 DEFAULT STATE: select "On" for security, select "Off" for dependability

Now the three blocking signals are available in UR IED 1 as DIRECT INPUT 7 ON, DIRECT INPUT 8 ON, and DIRECT INPUT 9 ON. Upon losing communications or a device, the scheme is inclined to block (if any default state is set to “On”), or to trip the bus on any overcurrent condition (all default states set to “Off”).

Example 3: Pilot-aided schemes

Consider a three-terminal line protection application shown in the following figure.

Figure 5-179: Three-terminal line application

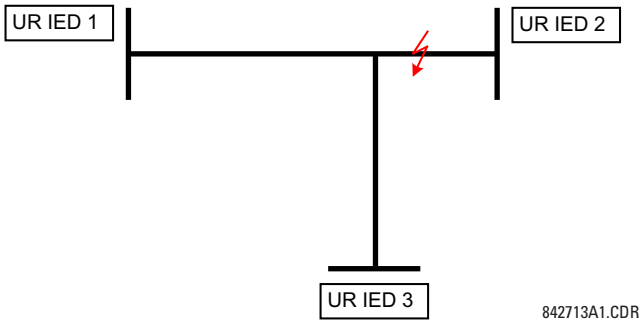

Assume the Hybrid Permissive Overreaching Transfer Trip (Hybrid POTT) scheme is applied using the architecture shown as follows. The scheme output operand HYB POTT TX1 is used to key the permission.

Figure 5-180: Single-channel open-loop configuration

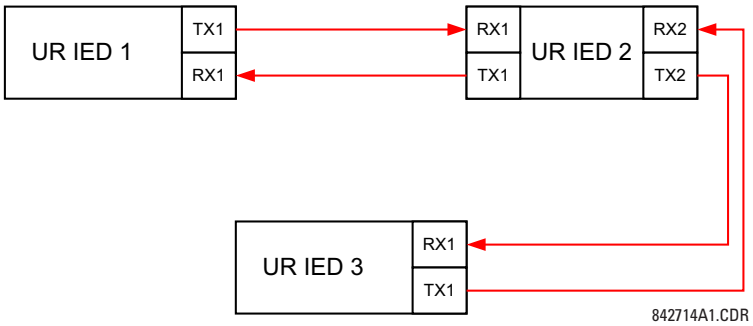

In this architecture, Devices 1 and 3 do not communicate directly. Therefore, Device 2 must act as a "bridge." The following settings are applied:

UR IEC 1:

DIRECT OUT 2 OPERAND: "HYB POTT TX1"
DIRECT INPUT 5 DEVICE ID: "2"
DIRECT INPUT 5 BIT NUMBER: "2" (this is a message from IED 2)
DIRECT INPUT 6 DEVICE ID: "2"
DIRECT INPUT 6 BIT NUMBER: "4" (effectively, this is a message from IED 3)

UR IED 3:

DIRECT OUT 2 OPERAND: "HYB POTT TX1"
DIRECT INPUT 5 DEVICE ID: "2"
DIRECT INPUT 5 BIT NUMBER: "2" (this is a message from IED 2)
DIRECT INPUT 6 DEVICE ID: "2"
DIRECT INPUT 6 BIT NUMBER: "3" (effectively, this is a message from IED 1)

UR IED 2:

DIRECT INPUT 5 DEVICE ID: "1"
DIRECT INPUT 5 BIT NUMBER: "2"
DIRECT INPUT 6 DEVICE ID: "3"
DIRECT INPUT 6 BIT NUMBER: "2"
DIRECT OUT 2 OPERAND: "HYB POTT TX1"
DIRECT OUT 3 OPERAND: "DIRECT INPUT 5" (forward a message from 1 to 3)
DIRECT OUT 4 OPERAND: "DIRECT INPUT 6" (forward a message from 3 to 1)

The figure shows the signal flow among the three IEDs.

Figure 5-181: Signal flow for direct input and output

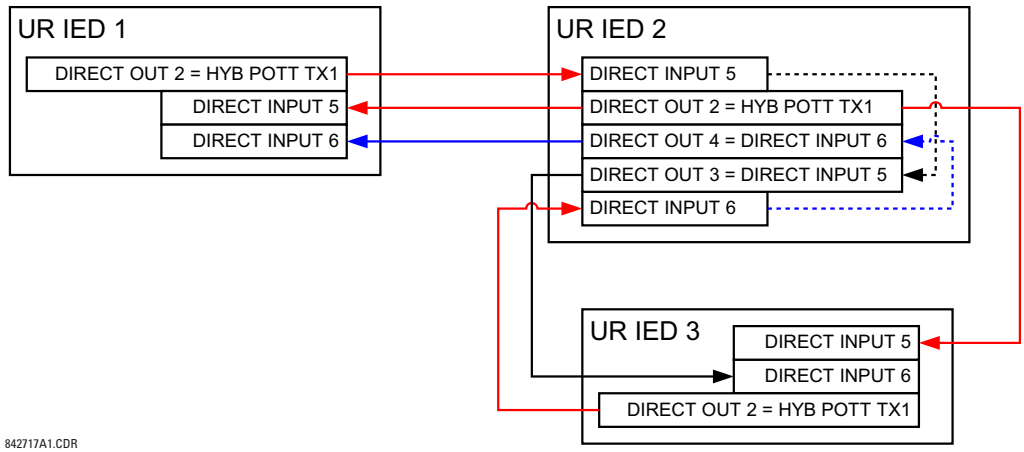

In three-terminal applications, both the remote terminals must grant permission to trip. Therefore, at each terminal, direct inputs 5 and 6 are ANDed in FlexLogic and the resulting operand configured as the permission to trip (**HYB POTT RX1** setting).

5.10.7 Teleprotection

5.10.7.1 Overview

The relay provides 16 teleprotection inputs on communications channel 1 (numbered 1-1 through 1-16) and 16 teleprotection inputs on communications channel 2 (on two-terminals two-channel and three-terminal systems only, numbered 2-1 through 2-16). The remote relay connected to channels 1 and 2 of the local relay is programmed by assigning FlexLogic operands to be sent via the selected communications channel. This allows the user to create distributed protection and control schemes via dedicated communications channels. Some examples are directional comparison pilot schemes and direct transfer tripping. Note that failures of communications channels affect teleprotection functionality. The teleprotection function must be enabled to utilize the inputs.

5.10.7.2 Teleprotection inputs

SETTINGS ⇨⇩ INPUTS/OUTPUTS ⇨⇩ TELEPROTECTION ⇨ TELEPROT INPUTS

■ TELEPROT INPUTS ■	⇔	TELEPROT INPUT 1-1 DEFAULT: Off	Range: Off, On, Latest/Off, Latest/On
		⇩	
	⇕	TELEPROT INPUT 1-16 DEFAULT: Off	Range: Off, On, Latest/Off, Latest/On
	⇕	TELEPROT INPUT 2-1 DEFAULT: Off	Range: Off, On, Latest/Off, Latest/On
		⇩	
	⇧	TELEPROT INPUT 2-16 DEFAULT: Off	Range: Off, On, Latest/Off, Latest/On

Setting the **TELEPROT INPUT ~~ DEFAULT** setting to "On" defaults the input to logic 1 when the channel fails. A value of "Off" defaults the input to logic 0 when the channel fails.

The "Latest/On" and "Latest/Off" values freeze the input in case of lost communications. If the latest state is not known, such as after relay power-up but before the first communication exchange, then the input defaults to logic 1 for "Latest/On" and logic 0 for "Latest/Off."

5.10.7.3 Teleprotection outputs

SETTINGS ⇨⇩ INPUTS/OUTPUTS ⇨⇩ TELEPROTECTION ⇨⇩ TELEPROT OUTPUTS

■ TELEPROT OUTPUTS ■	⇔	TELEPROT OUTPUT 1-1: Off	Range: FlexLogic operand
		⇩	
	⇕	TELEPROT OUTPUT 1-16: Off	Range: FlexLogic operand
	⇕	TELEPROT OUTPUT 2-1: Off	Range: FlexLogic operand
		⇩	
	⇧	TELEPROT OUTPUT 2-16: Off	Range: FlexLogic operand

As the following figure demonstrates, processing of the teleprotection inputs/outputs is dependent on the number of communication channels and terminals. On two-terminal two-channel systems, they are processed continuously on each channel and mapped separately per channel. Therefore, to achieve redundancy, the user must assign the same operand on both channels (teleprotection outputs at the sending end or corresponding teleprotection inputs at the receiving end). On three-terminal two-channel systems, redundancy is achieved by programming signal re-transmittal in the case of channel failure between any pair of relays.

Figure 5-182: Teleprotection input/output processing

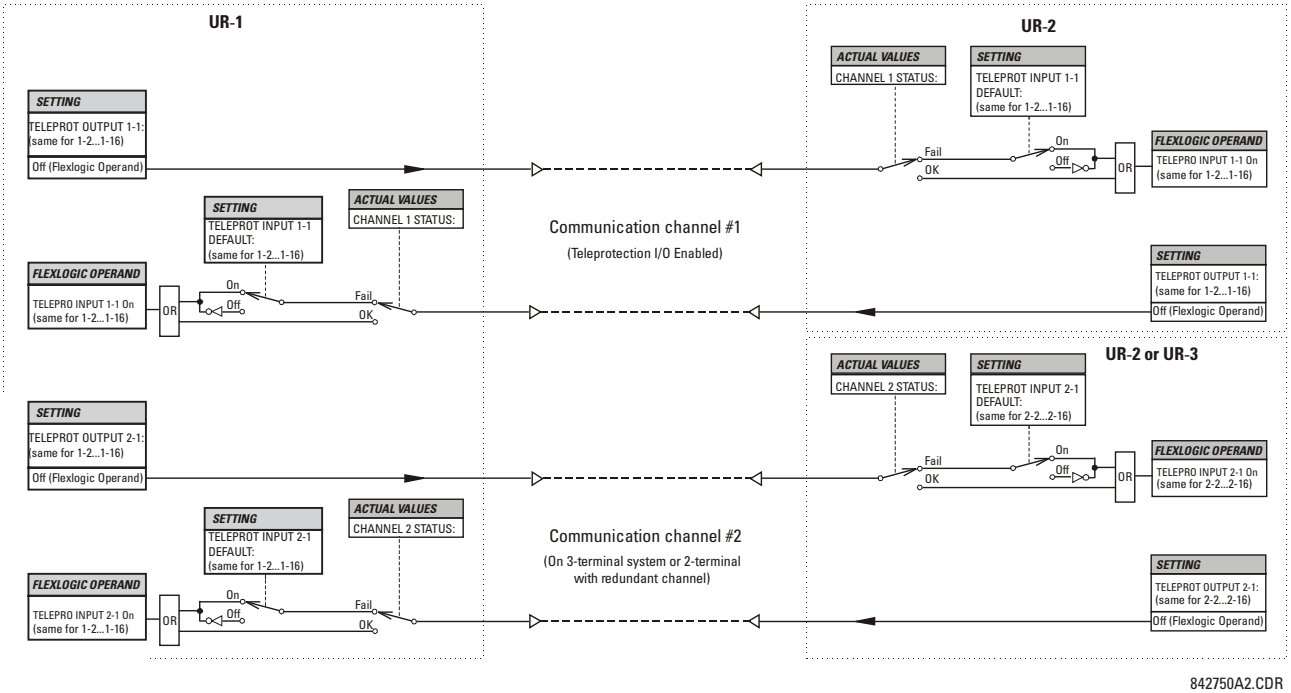

5

5.11 Transducer inputs/outputs

5.11.1 DCmA inputs

SETTINGS ⇨⇩ TRANSDUCER I/O ⇨⇩ DCMA INPUTS ⇨ DCMA INPUT F1(U8)

■ DCMA INPUT F1 ■	⇔	DCMA INPUT F1 FUNCTION: Disabled	Range: Disabled, Enabled
	⇩	DCMA INPUT F1 ID: DCMA Ip 1	Range: up to 20 alphanumeric characters
	⇩	DCMA INPUT F1 UNITS: µA	Range: six alphanumeric characters
	⇩	DCMA INPUT F1 RANGE: 0 to -1 mA	Range: 0 to –1 mA, 0 to +1 mA, –1 to +1 mA, 0 to 5 mA, 0 to 10mA, 0 to 20 mA, 4 to 20 m
	⇩	DCMA INPUT F1 MIN VALUE: 0.000	Range: –9999.999 to +9999.999 in steps of 0.001
	⇧	DCMA INPUT F1 MAX VALUE: 0.000	Range: –9999.999 to +9999.999 in steps of 0.001

SOFTWARE OPTION

The C70 is provided with optional DCmA capability, specified at the time of ordering.

Hardware and software are provided to receive signals from external transducers and to convert these signals into a digital format for use as required. The relay accepts inputs in the range of –1 to +20 mA DC, suitable for use with most common transducer output ranges; all inputs are assumed to be linear over the complete range. Hardware details are contained in chapter 3.

Before the DCmA input signal can be used, the value of the signal measured by the relay must be converted to the range and quantity of the external transducer primary input parameter, such as DC voltage or temperature. The relay simplifies this process by internally scaling the output from the external transducer and displaying the actual primary parameter.

DCmA input channels are arranged in a manner similar to CT and VT channels. Configure the individual channels with the settings shown here.

The channels are arranged in sub-modules of two channels, numbered from 1 through 8 from top to bottom. On power-up, the relay automatically generates configuration settings for every channel, based on the order code, in the same general manner that is used for CTs and VTs. Each channel is assigned a slot letter followed by the row number, 1 through 8 inclusive, which is used as the channel number. The relay generates an actual value for each available input channel.

Settings are generated automatically for every channel available in the specific relay as shown above for the first channel of a type 5F transducer module installed in slot F.

The function of the channel can be "Enabled" or "Disabled." If "Disabled," no actual values are created for the channel. An alphanumeric "ID" is assigned to each channel; this ID is included in the channel actual value, along with the programmed units associated with the parameter measured by the transducer, such as volts, °C, megawatts, and so on. This ID is also used to reference the channel as the input parameter to features designed to measure this type of parameter. The **DCMA INPUT F1 RANGE** setting specifies the mA DC range of the transducer connected to the input channel.

The **DCMA INPUT F1 MIN VALUE** and **DCMA INPUT F1 MAX VALUE** settings are used to program the span of the transducer in primary units. For example, a temperature transducer might have a span from 0 to 250 °C; in this case the **DCMA INPUT F1 MIN VALUE** value is "0" and the **DCMA INPUT F1 MAX VALUE** value is "250." Another example is a watts transducer with a span from –20 to +180 MW; in this case the **DCMA INPUT F1 MIN VALUE** value is "–20" and the **DCMA INPUT F1 MAX VALUE** value is "180." Intermediate values between the minimum and maximum values are scaled linearly.

5.11.2 RTD inputs

SETTINGS ⇨⇩ TRANSDUCER I/O ⇨⇩ RTD INPUTS ⇨ RTD INPUT F1(U8)

■ RTD INPUT F1 ■	⇔	RTD INPUT F1 FUNCTION: Disabled	Range: Disabled, Enabled
	⇩	RTD INPUT F1 ID: RTD Ip 1	Range: up to 20 alphanumeric characters
	⇩	RTD INPUT F1 TYPE: 100Ω Platinum	Range: 100Ω Nickel, 10Ω Copper, 100Ω Platinum, 120Ω Nickel

Hardware and software is provided to receive signals from external resistance temperature detectors and convert these signals into a digital format for use as required. These channels are intended to be connected to any of the RTD types in common use. Specific hardware details are contained in chapter 3.

RTD input channels are arranged in a manner similar to CT and VT channels. The user configures individual channels with the settings shown here.

The channels are arranged in sub-modules of two channels, numbered from 1 through 8 from top to bottom. On power-up, the relay automatically generates configuration settings for every channel, based on the order code, in the same general manner that is used for CTs and VTs. Each channel is assigned a slot letter followed by the row number, 1 through 8 inclusive, which is used as the channel number. The relay generates an actual value for each available input channel.

Settings are automatically generated for every channel available in the specific relay as shown above for the first channel of a type 5C transducer module installed in the first available slot.

The function of the channel can be either "Enabled" or "Disabled." If "Disabled," there is not an actual value created for the channel. An alphanumeric ID is assigned to the channel; this ID is included in the channel actual values. It is also used to reference the channel as the input parameter to features designed to measure this type of parameter. Selecting the type of RTD connected to the channel configures the channel.

Actions based on RTD overtemperature, such as trips or alarms, are done in conjunction with the FlexElements feature. In FlexElements, the operate level is scaled to a base of 100°C. For example, a trip level of 150°C is achieved by setting the operate level at 1.5 pu. FlexElement operands are available to FlexLogic for further interlocking or to operate an output contact directly.

See the following table for reference temperature values for each RTD type.

Table 5-41: RTD temperature vs. resistance

Temperature		Resistance (in ohms)			
°C	°F	100 Ω Pt (DIN 43760)	120 Ω Ni	100 Ω Ni	10 Ω Cu
–50	–58	80.31	86.17	71.81	7.10
–40	–40	84.27	92.76	77.30	7.49
–30	–22	88.22	99.41	82.84	7.88
–20	–4	92.16	106.15	88.45	8.26
–10	14	96.09	113.00	94.17	8.65
0	32	100.00	120.00	100.00	9.04
10	50	103.90	127.17	105.97	9.42
20	68	107.79	134.52	112.10	9.81
30	86	111.67	142.06	118.38	10.19
40	104	115.54	149.79	124.82	10.58
50	122	119.39	157.74	131.45	10.97
60	140	123.24	165.90	138.25	11.35
70	158	127.07	174.25	145.20	11.74
80	176	130.89	182.84	152.37	12.12
90	194	134.70	191.64	159.70	12.51
100	212	138.50	200.64	167.20	12.90
110	230	142.29	209.85	174.87	13.28
120	248	146.06	219.29	182.75	13.67
130	266	149.82	228.96	190.80	14.06
140	284	153.58	238.85	199.04	14.44
150	302	157.32	248.95	207.45	14.83
160	320	161.04	259.30	216.08	15.22
170	338	164.76	269.91	224.92	15.61
180	356	168.47	280.77	233.97	16.00
190	374	172.46	291.96	243.30	16.39
200	392	175.84	303.46	252.88	16.78
210	410	179.51	315.31	262.76	17.17
220	428	183.17	327.54	272.94	17.56
230	446	186.82	340.14	283.45	17.95
240	464	190.45	353.14	294.28	18.34
250	482	194.08	366.53	305.44	18.73

5.11.3 DCmA outputs

SETTINGS ⇨⇩ TRANSDUCER I/O ⇨⇩ DCMA OUTPUTS ⇨ DCMA OUTPUT F1(U8)

■ DCMA OUTPUT F1 ■	⇔	DCMA OUTPUT F1 SOURCE: Off	Range: Off, any analog actual value parameter
	⇩	DCMA OUTPUT F1 RANGE: –1 to 1 mA	Range: –1 to 1 mA, 0 to 1 mA, 4 to 20 mA
	⇩	DCMA OUTPUT F1 MIN VAL: 0.000 pu	Range: –90.000 to 90.000 pu in steps of 0.001
	⇧	DCMA OUTPUT F1 MAX VAL: 1.000 pu	Range: –90.000 to 90.000 pu in steps of 0.001

Hardware and software is provided to generate DCmA signals that allow interfacing with external equipment. Hardware details are contained in chapter 3. The DCmA output channels are arranged in a manner similar to transducer input or CT and VT channels. The user configures individual channels with the settings as follows.

The channels are arranged in sub-modules of two channels, numbered 1 through 8 from top to bottom. On power-up, the relay automatically generates configuration settings for every channel, based on the order code, in the same manner used for CTs and VTs. Each channel is assigned a slot letter followed by the row number, 1 through 8 inclusive, which is used as the channel number.

Both the output range and a signal driving a given output are user-programmable via the following settings menu (an example for channel M5 is shown).

The relay checks the driving signal (*x* in equations below) for the minimum and maximum limits, and subsequently re-scales so the limits defined as **MIN VAL** and **MAX VAL** match the output range of the hardware defined as **RANGE**. The following equation is applied:

$$I_{out} = \begin{cases} I_{min} & \text{if } x < \textbf{MIN VAL} \\ I_{max} & \text{if } x > \textbf{MAX VAL} \\ k(x - \textbf{MIN VAL}) + I_{min} & \text{otherwise} \end{cases} \qquad \textbf{Eq. 5-27}$$

where

x is a driving signal specified by the **SOURCE** setting
I_{min} and I_{max} are defined by the **RANGE** setting
k is a scaling constant calculated as:

$$k = \frac{I_{max} - I_{min}}{\textbf{MAX VAL} - \textbf{MIN VAL}} \qquad \textbf{Eq. 5-28}$$

The feature is intentionally inhibited if the **MAX VAL** and **MIN VAL** settings are entered incorrectly, for example when **MAX VAL** – **MIN VAL** < 0.1 pu. The resulting characteristic is illustrated in the following figure.

Figure 5-183: DCmA output characteristic

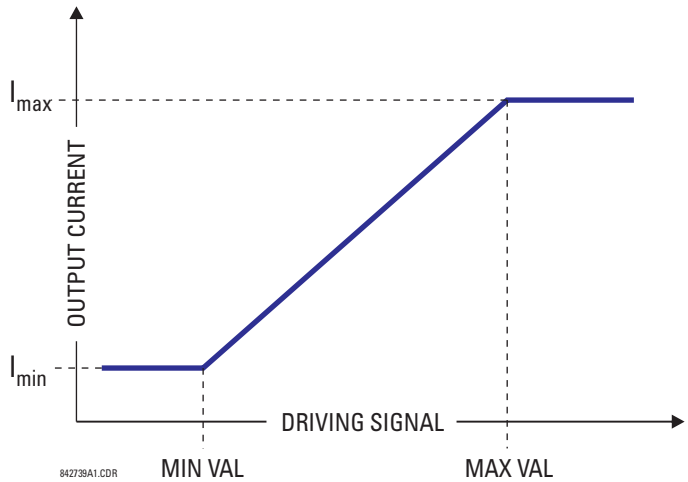

Settings

DCMA OUTPUT F1 SOURCE — This setting specifies an internal analog value to drive the analog output. Actual values (FlexAnalog parameters) such as power, current amplitude, voltage amplitude, power factor, etc. can be configured as sources driving DCmA outputs. See Appendix A for a list of FlexAnalog parameters.

DCMA OUTPUT F1 RANGE — This setting allows selection of the output range. Each DCmA channel can be set independently to work with different ranges. The three most commonly used output ranges are available.

DCMA OUTPUT F1 MIN VAL — This setting allows setting the minimum limit for the signal that drives the output. This setting is used to control the mapping between an internal analog value and the output current. The setting is entered in per-unit values. The base units are defined in the same manner as the FlexElement base units.

DCMA OUTPUT F1 MAX VAL — This setting allows setting the maximum limit for the signal that drives the output. This setting is used to control the mapping between an internal analog value and the output current. The setting is entered in per-unit values. The base units are defined in the same manner as the FlexElement base units.

NOTE

The **DCMA OUTPUT F1 MIN VAL** and **DCMA OUTPUT F1 MAX VAL** settings are ignored for power factor base units (that is, if the **DCMA OUTPUT F1 SOURCE** is set to FlexAnalog value based on power factor measurement).

Three application examples follow.

Example: Power monitoring

A three phase active power on a 13.8 kV system measured via UR-series relay source 1 is to be monitored by the DCmA H1 output of the range of –1 to 1 mA. The following settings are applied on the relay: CT ratio = 1200:5, VT secondary 115, VT connection is delta, and VT ratio = 120. The nominal current is 800 A primary and the nominal power factor is 0.90. The power is to be monitored in both importing and exporting directions and allow for 20% overload compared to the nominal.

The nominal three-phase power is:

$$P = \sqrt{3} \times 13.8\ \text{kV} \times 0.8\ \text{kA} \times 0.9 = 17.21\ \text{MW} \qquad \textbf{Eq. 5-29}$$

The three-phase power with 20% overload margin is:

$$P_{max} = 1.2 \times 17.21\ \text{MW} = 20.65\ \text{MW} \qquad \textbf{Eq. 5-30}$$

The base unit for power (refer to the FlexElements section in this chapter for additional details) is:

$$P_{BASE} = 115\ \text{V} \times 120 \times 1.2\ \text{kA} = 16.56\ \text{MW} \qquad \textbf{Eq. 5-31}$$

The minimum and maximum power values to be monitored (in pu) are:

$$\text{minimum power} = \frac{-20.65\ \text{MW}}{16.56\ \text{MW}} = -1.247\ \text{pu}, \quad \text{maximum power} = \frac{20.65\ \text{MW}}{16.56\ \text{MW}} = 1.247\ \text{pu} \qquad \textbf{Eq. 5-32}$$

The following settings are entered:

DCMA OUTPUT H1 SOURCE: "SRC 1 P"
DCMA OUTPUT H1 RANGE: "–1 to 1 mA"
DCMA OUTPUT H1 MIN VAl: "–1.247 pu"
DCMA OUTPUT H1 MAX VAL: "1.247 pu"

With the above settings, the output will represent the power with the scale of 1 mA per 20.65 MW. The worst-case error for this application can be calculated by superimposing the following two sources of error:

- ±0.5% of the full scale for the analog output module, or ±0.005 x (1-(-1)) x 20.65 MW = ±0.207 MW
- ±1% of reading error for the active power at power factor of 0.9

For example at the reading of 20 MW, the worst-case error is 0.01 × 20 MW + 0.207 MW = 0.407 MW.

Example: Current monitoring

The phase A current (true RMS value) is to be monitored via the H2 current output working with the range from 4 to 20 mA. The CT ratio is 5000:5 and the maximum load current is 4200 A. The current is to be monitored from 0 A upwards, allowing for 50% overload.

The phase current with the 50% overload margin is:

$$I_{max} = 1.5 \times 4.2\ \text{kA} = 6.3\ \text{kA} \qquad \textbf{Eq. 5-33}$$

The base unit for current (see the FlexElements section in this chapter for additional details) is:

$$I_{BASE} = 5 \text{ kA} \quad \textbf{Eq. 5-34}$$

The minimum and maximum power values to be monitored (in pu) are:

$$\text{minimum current} = \frac{0 \text{ kA}}{5 \text{ kA}} = 0 \text{ pu}, \quad \text{maximum current} = \frac{6.3 \text{ kA}}{5 \text{ kA}} = 1.26 \text{ pu} \quad \textbf{Eq. 5-35}$$

The following settings are entered:

DCMA OUTPUT H2 SOURCE: "SRC 1 Ia RMS"
DCMA OUTPUT H2 RANGE: "4 to 20 mA"
DCMA OUTPUT H2 MIN VAL: "0.000 pu"
DCMA OUTPUT H2 MAX VAL: "1.260 pu"

The worst-case error for this application can be calculated by superimposing the following two sources of error:

- ±0.5% of the full scale for the analog output module, or ±0.005 x (20 - 4) x 6.3 kA = ±0.504 kA
- ±0.25% of reading or ±0.1% of rated (whichever is greater) for currents between 0.1 and 2.0 of nominal

For example, at the reading of 4.2 kA, the worst-case error is max(0.0025 × 4.2 kA, 0.001 × 5 kA) + 0.504 kA = 0.515 kA.

Example: Voltage monitoring

A positive-sequence voltage on a 400 kV system measured via source 2 is to be monitored by the DCmA H3 output with a range of 0 to 1 mA. The VT secondary setting is 66.4 V, the VT ratio setting is 6024, and the VT connection setting is "Delta." The voltage is to be monitored in the range from 70% to 110% of nominal.

The minimum and maximum positive-sequence voltages to be monitored are:

$$V_{min} = 0.7 \times \frac{400 \text{ kV}}{\sqrt{3}} = 161.66 \text{ kV}, \quad V_{max} = 1.1 \times \frac{400 \text{ kV}}{\sqrt{3}} = 254.03 \text{ kV} \quad \textbf{Eq. 5-36}$$

The base unit for voltage (see the FlexElements section in this chapter for additional details) is:

$$V_{BASE} = 0.0664 \text{ kV} \times 6024 = 400 \text{ kV} \quad \textbf{Eq. 5-37}$$

The minimum and maximum voltage values to be monitored (in pu) are:

$$\text{minimum voltage} = \frac{161.66 \text{ kV}}{400 \text{ kV}} = 0.404 \text{ pu}, \quad \text{maximum voltage} = \frac{254.03 \text{ kV}}{400 \text{ kV}} = 0.635 \text{ pu} \quad \textbf{Eq. 5-38}$$

The following settings are entered:

DCMA OUTPUT H3 SOURCE: "SRC 2 V_1 mag"
DCMA OUTPUT H3 RANGE: "0 to 1 mA"
DCMA OUTPUT H3 MIN VAL: "0.404 pu"
DCMA OUTPUT H3 MAX VAL: "0.635 pu"

The limit settings differ from the expected 0.7 pu and 1.1 pu because the relay calculates the positive-sequence quantities scaled to the phase-to-ground voltages, even if the VTs are connected in "Delta" (see the Metering Conventions section in chapter 6), while at the same time the VT nominal voltage is 1 pu for the settings. Consequently the settings required in this example differ from naturally expected by the factor of $\sqrt{3}$.

The worst-case error for this application could be calculated by superimposing the following two sources of error:

- ±0.5% of the full scale for the analog output module, or ± 0.005 x (1-0) x 254.03 kV = ±1.27 kV
- ±0.5% of reading

For example, under nominal conditions, the positive-sequence reads 230.94 kV and the worst-case error is 0.005 × 230.94 kV + 1.27 kV = 2.42 kV.

5.12 Testing

5.12.1 IED mode config

SETTINGS ⇨⇩ TESTING ⇨ IED MODE CONFIG

■ **IED MODE CONFIG** ■	⇔	**IED MODE:** **On**	Range: On, Test, Test-Blocked
	⇩	**TEST MODE INPUT:** **Off**	Range: FlexLogic operand
	⇩	**TEST-BLK MODE INPUT:** **Off**	Range: FlexLogic operand
	⇩	**MODE CTRL VIA MMS:** **On**	Range: FlexLogic operand (displays with IEC 61850)
	⇩	**CONTACT I/O FORCING:** **On**	Range: FlexLogic operand
	⇧	**IED BEHAVIOR:** **On**	Range: On, Test, Test-Blocked

The C70 provides a test facility to verify the functionality of contact inputs and outputs, some communication functions and the Phasor Measurement Unit (PMU, where applicable), using simulated conditions. It is accessible in the software and graphical front panel.

IED MODE — Can be in one of three states: On, Test, or Test-Blocked. In UR 7.7 and later, as outlined in the Simulation section that follows, the UR test mode and GOOSE simulation mode are isolated, and they no longer depend on the mode setting here.

The On mode is for normal in service operation; the relay protection, control, and communication function is normal. Test features are disabled, except channel tests and PMU tests remain usable when provided. In On mode, the front panel Test Mode LED is off.

The Test-Blocked mode allows the relay to be placed quickly in a state where the relay cannot negatively impact the power system or other parts of the substation automation system. This is to allow changing settings, loading new firmware, changing hardware modules, and changing communication connections. As far as practical all relay output signals are blocked. Contact outputs are de-energized, latching outputs are frozen. Commands to HardFiber Bricks are blocked. The test bit of quality attribute of values that can be output via IEC 61850 services is set to "TRUE." The validity bit of the quality attribute of the data sent via IEC 61850 services is set to "GOOD" if no major error is active. Direct I/O channel tests and PMU tests are usable on applicable models. In Test-Blocked mode, the front panel Test Mode LED is on.

The Test mode is for testing involving forcing relay operation by test signal injection and verifying correct relay output. This mode is also for tests to verify the relay outputs (both contact and communications) have the intended impact on specific power system devices or on specific other substation automation devices. Contact outputs can be selectively enabled or forced as described in the Force Contact Inputs and Force Contact Outputs sections that follow. Shared outputs to Bricks have their test mode flag raised, which results in their value only being accepted by relays also in forcible Test mode. The test bit and validity bit of the quality attribute of data sent via IEC 61850 services are set as "TRUE" and "GOOD" respectively. In Test mode, the front panel Test Mode LED flashes.

Otherwise, the UR remains fully operational while in the Test mode, allowing for various testing procedures. In particular, the protection and control elements, and FlexLogic function normally. Other than the IEC 61850 protocol, communications based inputs and outputs remain fully operational. The test procedure must take this into account. Direct I/O channel tests and PMU tests are usable on applicable models.

When set to Test mode and the operand selected by the **CONTACT I/O FORCING** setting is "On"

- If the **FORCE Cont Ip #** setting is set to Open or Closed, the respective quality attribute of the data sent via IEC 61850 services is set to q.source = "substituted"
- If the **FORCE Cont Op #** setting is set to Energized, De-energized, or Freeze, the respective quality attribute of the data sent via IEC 61850 services is set to q.source = "substituted"

When the Breaker Status is substituted manually from a graphical front panel, the respective quality attribute of the breaker position data sett via IEC 61850 services is set to q.source = "substituted."

The **IED MODE** setting can be selected through

- Front panel
- EnerVista UR Setup software
- FlexLogic operands
- IEC 61850 control to LLN0.Mod
- "INITIATE TEST MODE ON SIM" setting (under **SIMULATION > SUBSCRIBE TO SIMULATED VALUES** menu)

TEST MODE INPUT — This setting selects a FlexLogic operand that can put the UR into Test mode as per the logic diagram. Any FlexLogic operand can be assigned to enable forcible Test mode, that is driven by any remote inputs, logic outputs, front panel (user-programmable push buttons), and so on.

TEST-BLK MODE INPUT — This setting selects a FlexLogic operand that can put the UR into Test-Blocked mode as per the logic diagram. Any FlexLogic operand can be assigned to enable test isolated mode, that is driven by any remote inputs, logic outputs, front panel (user-programmable push buttons) and so on.

MODE CTRL VIA MMS — This setting selects a FlexLogic operand for an IEC 61850 client to control the IED mode. When the operand is low/off, IED mode control from the IEC 61850 client is disabled, and the control request to LLN0.Mod.ctlVal returns return a negative response. When high/on, IED mode control by an IEC 61850 client is accepted.

CONTACT I/O FORCING — When in Test mode, the operand selected by this setting dictates further response of the UR to testing conditions, as described in the Force Contact Inputs and Force Contact Outputs sections that follow. When no operand is specified in this setting, forcing of inputs and outputs during Test mode are not available. Following restart or power-up, this setting remains at the last value.

The test mode state is indicated on the relay front panel by a combination of the Test Mode LED indicator, the In-Service LED indicator, and by the critical fail relay, as shown in the table.

Table 5-42: Test mode operation

IED MODE setting	In-Service LED	Test Mode LED	Critical fail relay	CONTACT I/O FORCING setting	Contact input and output behavior
On	Unaffected	Off	Normal	No effect	Normal
Test-Blocked	Off	On	De-energized	No effect	Contact outputs disabled
Test	Off	Flashing	De-energized	Off	Normal
				On	Controlled by forcing features

IED BEHAVIOR — Displays the actual behavior of the IED based on different inputs to control the **IED MODE**. Note that the test mode can be changed through the front panel, EnerVista software, FlexLogic operands, IEC 61850 control to LLN0.Mod, and **INITIATE TEST MODE ON SIM** setting, with the following behavior.

Table 5-43: IED fields based on input

Change to IED MODE	Behavior
Using front panel	**IED MODE** and **IED BEHAVIOR** change in software
Using software	**IED MODE** and **IED BEHAVIOR** change on front panel
Using operand	**IED MODE** does not change in software or front panel, **IED BEHAVIOR** reflects change
Using **INITIATE TEST MODE ON SIM** setting	**IED MODE** and **IED BEHAVIOR** do not change in software or front panel

5.12.1.1 IED mode process

The **IED MODE** setting is changed to Test or Test-Blocked (depending upon the selected setting value for "INITIATE TEST MODE ON SIM") when the relay is put into simulation mode. After this, the **IED MODE** is controlled by the **TESTING ⇨ IED MODE CONFIG** menu.

The **IED MODE** selection is illustrated in the logic diagram.

The SR Latch that drives the UR into Test mode or On mode are reset-dominant, which means that Test-Blocked mode has the highest priority over Test and On modes, when simultaneous commands are active. For example, if both the FlexLogic operands assigned to the **TEST MODE INPUT** and **TEST-BLK MODE INPUT** settings are ON, then the **IED MODE** is Test-Blocked.

If Any Major error FlexLogic operand is set, then **IED MODE** is set to Test-Blocked.

Following UR restart or power-up, the **IED MODE** remains latched at the last value, until change is trigged by another input/command.

When the relay simulation mode is enabled (LPHD.Sim.stVal = TRUE), the "INITIATE TEST MODE ON SIM" setting triggers respective test mode. If the relay is already in Test or Test-Blocked mode, the priority scheme defined in the **IED MODE** processing logic decides the resulting IED mode.

In summary, enabling the Test or Test-Blocked mode in the **TESTING ⇨ IED MODE CONFIG** menu has no impact on the simulation mode. However, enabling the simulation mode triggers the respective test mode selected by the "INITIATE TEST MODE ON SIM" setting and the resulting IED mode is decided by the **IED MODE** process logic diagram. Once the simulation mode is enabled, the user can switch independently among IED modes using the **IED MODE CONFIG** settings while the simulation mode continues.

As shown in the logic diagram, the "INITIATE TEST MODE ON SIM" setting triggers the respective IED mode only when the relay is entering into simulation mode (meaning on the positive edge trigger of RLY IN SIM MODE FlexLogic operand) or there is a change in the "INITIATE TEST MODE ON SIM" setting value. Once simulation mode is enabled, any command to change the IED Mode triggers the respective IED mode. When the simulation mode is disabled, the test mode initiated by "INITIATE TEST MODE ON SIM" setting resets.

Figure 5-184: IED mode processing logic

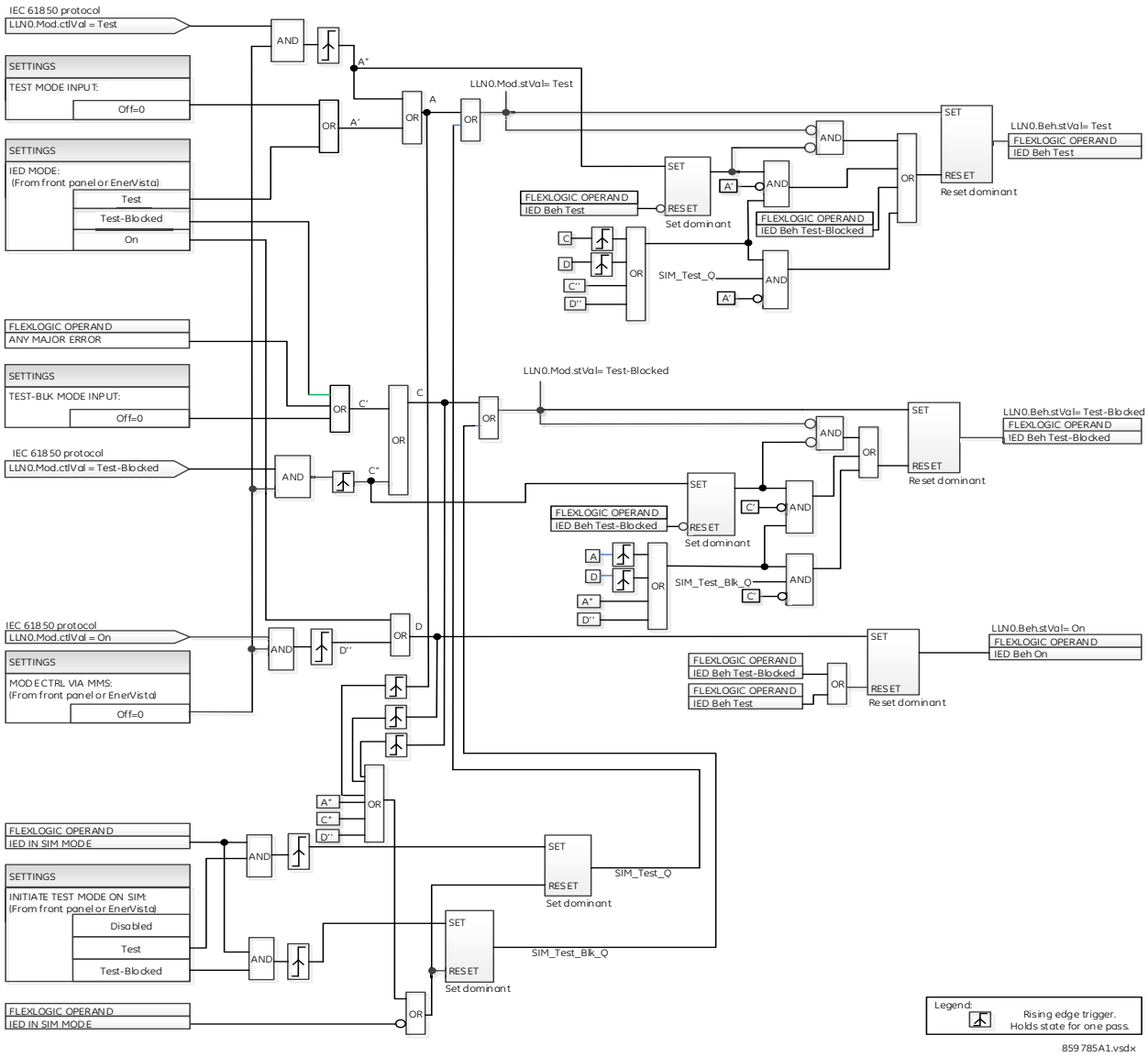

5.12.2 Force contact inputs

SETTINGS ⇨⇩ TESTING ⇨⇩ FORCE CONTACT INPUTS

■ **FORCE CONTACT INPUTS**	⇔	**FORCE Cont Ip 1 Normal**	Range: Normal, Open, Closed
	⇩	**FORCE Cont Ip 2 Normal**	Range: Normal, Open, Closed
	⇩		
	⇧	**FORCE Cont Ip xx Normal**	Range: Normal, Open, Closed

The force contact inputs feature provides a method of performing checks on the function of all contact inputs. While in Test mode, the relay contact inputs can be pre-programmed to respond in the following ways:

- If set to "Normal," the input remains fully operational. It is controlled by the voltage across its input terminals and can be turned on and off by external circuitry. Select this value if a given input must be operational during the test. This includes, for example, an input initiating the test, or being a part of a user pre-programmed test sequence.
- If set to "Open," the input is forced to report as opened (Logic 0) while the operand selected by **CONTACT I/O FORCING** setting is On, regardless of the voltage across the input terminals. While the selected operand is Off, the input behaves as it does when in service.
- If set to "Closed," the input is forced to report as closed (Logic 1) while the operand selected by **CONTACT I/O FORCING** setting is On regardless of the voltage across the input terminals. While the selected operand is Off, the input behaves as it does when in service.

NOTE

Following a restart or power-up, the force contact input and force contact output settings revert to Normal state.

5.12.3 Force contact outputs

SETTINGS ⇨⇩ TESTING ⇨⇩ FORCE CONTACT OUTPUTS

■ FORCE CONTACT ■ OUTPUTS	⇔	FORCE Cont Op 1 Normal	Range: Normal, Energized, De-energized, Freeze
	⇩	FORCE Cont Op 2 Normal	Range: Normal, Energized, De-energized, Freeze
	⇩		
	⇧	FORCE Cont Op xx Normal	Range: Normal, Energized, De-energized, Freeze

The force contact outputs feature provides a method of performing checks on the function of all contact outputs.

While in Test mode, the relay contact outputs can be pre-programmed to respond in the following ways:

- If set to "Normal," the contact output remains fully operational. It operates when its control operand is logic 1 and resets when its control operand is logic 0.
- If set to "Energized," the output closes and remains closed while the operand selected by the **CONTACT I/O FORCING** setting is On, regardless of the status of the operand configured to control the output contact. While the selected operand is Off, the output behaves as it does when in service.
- If set to "De-energized," the output opens and remains opened while the operand selected by the **CONTACT I/O FORCING** setting is On, regardless of the status of the operand configured to control the output contact. While the selected operand is Off, the output behaves as it does when in service.
- If set to "Freeze," the output retains its position at the instant before the **IED MODE** was Test and the operand selected by the **CONTACT I/O FORCING** setting was On, regardless of later changes in the status of the operand configured to control the output contact. While the selected operand is Off, the output behaves as it does when in service.

NOTE

On power-up or restart, the force contact input and force contact output settings revert to Normal state.

5.13 Simulation

SETTINGS ⇨⇩ SIMULATION

■ SETTINGS ■ SIMULATION	⇔	■ SUBSCRIBE TO ■ SIMULATED VALUES	See below
	⇧	■ PUBLISH ■ SIMULATED VALUES	See page 5-350

5.13.1 Subscribe to simulated values

SETTINGS ⇨⇩ SIMULATION ⇨ SUBSCRIBE TO SIMULATED VALUES

■ SUBSCRIBE TO ■ SIMULATED VALUES	⇔	SIMULATION MODE: Disabled	Range: Disabled, Enabled
	⇩	SIM MODE INPUT: Off	Range: FlexLogic operand
	⇩	SIM CTRL VIA MMS: On	Range: FlexLogic operand
	⇩	INITIATE TEST MODE ON SIM: Test-Blocked	Range: Disabled, Test, Test-Blocked
	⇧	SIMULATION MODE STATUS: Disabled	Range: Disabled, Enabled

SOFTWARE OPTION

The C70 is provided with optional IEC 61850 communications that include simulation. The option is specified at the time of ordering. The field reads "Unavailable" when IEC 61850 is not present.

Prior to UR 7.7, when the UR **TEST MODE FUNCTION** is set to "Test-Blocked" or "Test," the sim bit in the header of all transmitted GOOSE messages is set to "TRUE," so that the UR plays the simulator role during the testing and commissioning phases. The "Sim" data attribute in the relay is set (<MasterLD>/LPHD1.Sim.stVal = TRUE), so that if GOOSE messages are received with the "simulation" flag set, these are used in place of the normal messages. The quality attribute values that are transmitted via GOOSE services are set to "valid" + "test."

In UR 7.7 and later, the UR test mode and GOOSE simulation mode are isolated. The sim bit in the transmitted GOOSE messages and the relay "Sim" attribute (<MasterLD>/LPHD1.Sim.stVal) are controlled via new Modbus settings and MMS control requests. They no longer depend on the UR **TEST MODE FUNCTION** or **IED MODE**.

The settings also display in the software when the C70 is set to IEC 61850 Edition 2. When using IEC 61850 Edition 1, the settings are read-only.

SIMULATION MODE — When set to Disabled, the relay "Sim" attribute (<MasterLD>/LPHD1.Sim.StVal) is set to False and the GOOSE/SV messages received with simulation flag/bit set are ignored.

When set to Enabled, the relay "Sim" attribute (<MasterLD>/LPHD1.Sim.StVal) is set to True, so that if GOOSE/SV messages are received with the "simulation" flag/bit set, these are used in place of the normal messages.

SV messages has a simulation bit in the Reserved 1 field.

SIM MODE INPUT — This setting selects a FlexLogic operand. When set, the relay Simulation mode is enabled and, if the messages (either GOOSE or SV) are received with the simulation bit true, messages from simulation devices are used in place of actual messages. Any FlexLogic operand can be assigned to enable simulation mode, that is, driven by any remote inputs, logic outputs, front panel (user-programmable pushbuttons), and so on.

SIM CTRL VIA MMS — This setting selects a FlexLogic operand for the IEC 61850 client to control the simulation mode.

When set to Off, simulation mode selection via IEC 61850 client is disabled and control request to LPHD.Sim.ctlVal returns return negative response.

When set to On, simulation mode selection via IEC 61850 client is accepted.

This setting can be set from the front panel, EnerVista UR Setup software, FlexLogic operand, and IEC61850 control to LPHD.Sim.ctlVal.

INITIATE TEST MODE ON SIM — This setting initiates the selected test mode when simulation mode is enabled.

When set to Disabled, any command (from an IEC 61850 client, front panel, or Flex Operand) to set the simulation mode enables the Sim mode irrespective of the current IED mode.

When set to Test or Test-Blocked, any command to set the simulation mode selects respective test mode, if the relay is not already in Test or Test-Blocked mode. If the relay is already in Test or Test-Blocked mode by any user command (from IEC 61850 client, front panel, or Flex Operand), the respective priority defined in test mode processing decides the resultant test mode.

In summary, enabling the Test or Test-Blocked mode via the **IED MODE** setting (from front panel or EnerVista), via a IEC61850 client command to LLN0.Mod.ctlVal, or via **TEST MODE INPUT** and **TEST-BLK MODE INPUT** settings (FlexLogic operands) has no impact on the simulation mode. However, enabling the simulation mode using the **SIMULATION MODE** setting (from front panel or EnerVista), via an IEC61850 client command to LPHD.Sim.ctlVal, or via **SIM MODE INPUT** setting (FlexLogic operand) enables the selected test mode by the **INITIATE TEST MODE ON SIM** setting. A user can independently disable the test or test-blocked mode by any specified command type, but the relay simulation mode continues and accepts the simulated values in place of actual values until the simulation mode is disabled.

SIMULATION MODE STATUS — This is an actual value that indicates the present simulation mode of the relay.

Figure 5-185: Simulation mode logic

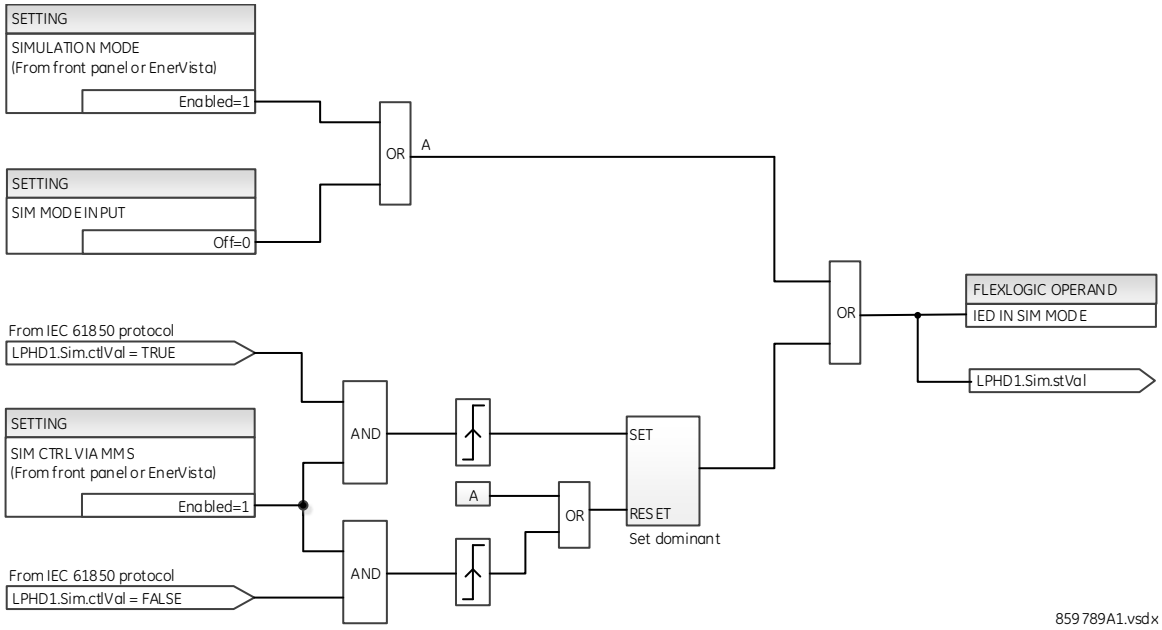

5.13.2 Publish simulated values

SETTINGS ⇨⇩ SIMULATION ⇨⇩ PUBLISH SIMULATED VALUES

■ **PUBLISH** ■ **SIMULATED VALUES**	⇔	**TxGOOSE SIM MODE:** **Disabled**	Range: Disabled, Enabled
	⇩	**SIM Q.VALIDITY:** **NONE**	Range: NONE, GOOD, INVALID, QUESTIONABLE
	⇧	**SIM Q.TEST:** **NONE**	Range: NONE, TRUE, FALSE

TxGOOSE SIM MODE — When set to Disabled, the sim bits in all transmitted GOOSE messages are set to FALSE.

When set to Enabled, the sim bits in all transmitted GOOSE messages are set to TRUE.

This setting can be modified through the front panel, EnerVista UR Setup software, IEC 61850 client control to <MasterLD>/LPHD1.TxGoSim.

SIM Q.VALIDITY — This setting simulates the validity bits of the quality attribute values included in all transmitted GOOSE messages. When set to NONE, the q.Validity bits are set based on the logical node behavior value. When set to any other value, the q.Validity bits of quality attributes included in all transmitted GOOSE messages are set to the selected value.

This setting is used when **TxGOOSE SIM MODE** is set to Enabled. It can be modified through the front panel and EnerVista UR Setup software.

SIM Q.TEST — This setting simulates the Test bit of the quality attribute values included in all transmitted GOOSE messages. When set to NONE, the q.Test bit is set based on the relay **TEST MODE FUNCTION** / **IED MODE**. When set to any other value, the q.Test bit of quality attributes included in all transmitted GOOSE messages is set to the selected value.

This setting is used when **TxGOOSE SIM MODE** is set to Enabled. It can be modified through the front panel and EnerVista UR Setup software.

C70 Capacitor Bank Protection and Control System

Chapter 6: Actual values

This chapter outlines viewing of data on the front panel, software, and/or web browser.

6.1 Actual values menu

■■ ACTUAL VALUES ■■ FRONT PANEL	⇔	■ ■	Access in EnerVista See page 6-3
⇩			
■■ ACTUAL VALUES ■■ STATUS	⇔	■ IED ■	See page 6-5
⇩	⇕	■ CONTACT INPUTS ■	See page 6-5
	⇕	■ VIRTUAL INPUTS ■	See page 6-5
	⇕	■ RxGOOSE BOOLEANS ■	See page 6-5
	⇕	■ RxGOOSE DPS ■	See page 6-6
	⇕	■ TELEPROTECTION ■ INPUTS	See page 6-6
	⇕	■ CONTACT OUTPUTS ■	See page 6-6
	⇕	■ VIRTUAL OUTPUTS ■	See page 6-7
	⇕	■ RxGOOSE STATUS ■	See page 6-7
	⇕	■ RxGOOSE ■ STATISTICS	See page 6-7
	⇕	■ DIGITAL COUNTERS ■	See page 6-8

	⇕	■ SELECTOR SWITCHES ■	See page 6-8
	⇕	■ FLEX STATES ■	See page 6-8
	⇕	■ TIME OF DAY TIMERS ■	See page 6-8
	⇕	■ ETHERNET ■	See page 6-9
	⇕	■ REAL TIME CLOCK ■ SYNCHRONIZING	See page 6-9
	⇕	■ DIRECT INPUTS ■	See page 6-10
	⇕	■ DIRECT DEVICES ■ STATUS	See page 6-10
	⇕	■ TELEPROT CH TESTS ■	See page 6-11
	⇕	■ COMM STATUS ■ REMAINING CONNECT	See page 6-11
	⇕	■ PRP STATUS ■	See page 6-12
	⇕	■ TxGOOSE STATUS ■	See page 6-12
⇧	⇧	■ PROTOCOL ■	See page 6-13
■■ ACTUAL VALUES ■■ METERING	⇔	■ SOURCE SRC 1 ■	See page 6-17
⇩	⇕	■ SOURCE SRC 2 ■	
	⇕	■ SOURCE SRC 3 ■	
	⇕	■ SOURCE SRC 4 ■	
	⇕	■ SOURCE SRC 5 ■	
	⇕	■ SOURCE SRC 6 ■	
	⇕	■ TRACKING FREQUENCY ■	See page 6-21
	⇕	■ FLEXELEMENTS ■	See page 6-22
	⇕	■ CAPACITOR CONTROL ■	See page 6-22
	⇕	■ CAPACITOR ■ BANK	See page 6-22
	⇕	■ RxGOOSE Analogs ■	See page 6-24
	⇕	■ TRANSDUCER I/O ■ DCMA INPUTS	See page 6-24

⇧	⇧	■ TRANSDUCER I/O ■ RTD INPUTS	See page 6-24
■■ ACTUAL VALUES ■■ REMOTE RESOURCES	⇔	■ FIELD UNIT U1 ■ ID: U 1	See page 6-24
		⇩	
⇧	⇧	■ FIELD UNIT U8 ■ ID: U 8	
■■ ACTUAL VALUES ■■ PB MODULE	⇔	■ GENERAL STATUS ■	See page 6-25
⇩	⇧⇩	■ RxSV Status ■	See page 6-25
⇧	⇧	■ TIME SYNC ■	See page 6-26
■■ ACTUAL VALUES ■■ RECORDS	⇔	■ USER PROGRAMMABLE ■ FAULT REPORTS	See page 6-28
⇩	⇧⇩	■ EVENT RECORDS ■	See page 6-28
	⇧⇩	■ OSCILLOGRAPHY ■	See page 6-30
	⇧⇩	■ DATA LOGGER ■	See page 6-31
⇧	⇧	■ MAINTENANCE ■	See page 6-31
■■ ACTUAL VALUES ■■ PRODUCT INFO	⇔	■ MODEL INFORMATION ■	See page 6-32
	⇧	■ FIRMWARE REVISIONS ■	See page 6-32

For status reporting, 'On' represents Logic 1 and 'Off' represents Logic 0.

6

6.2 Front panel

6.2.1 Enhanced and basic front panels

The front panel can be viewed and used in the EnerVista software, for example to view an error message displayed on the front panel. Settings cannot be changed in this interface.

To view the front panel in EnerVista software:

1. Click **Actual Values > Front Panel**.
2. Click the pushbutton or LCD area to enlarge it.

Figure 6-1: Front panel use in the software (C60 shown)

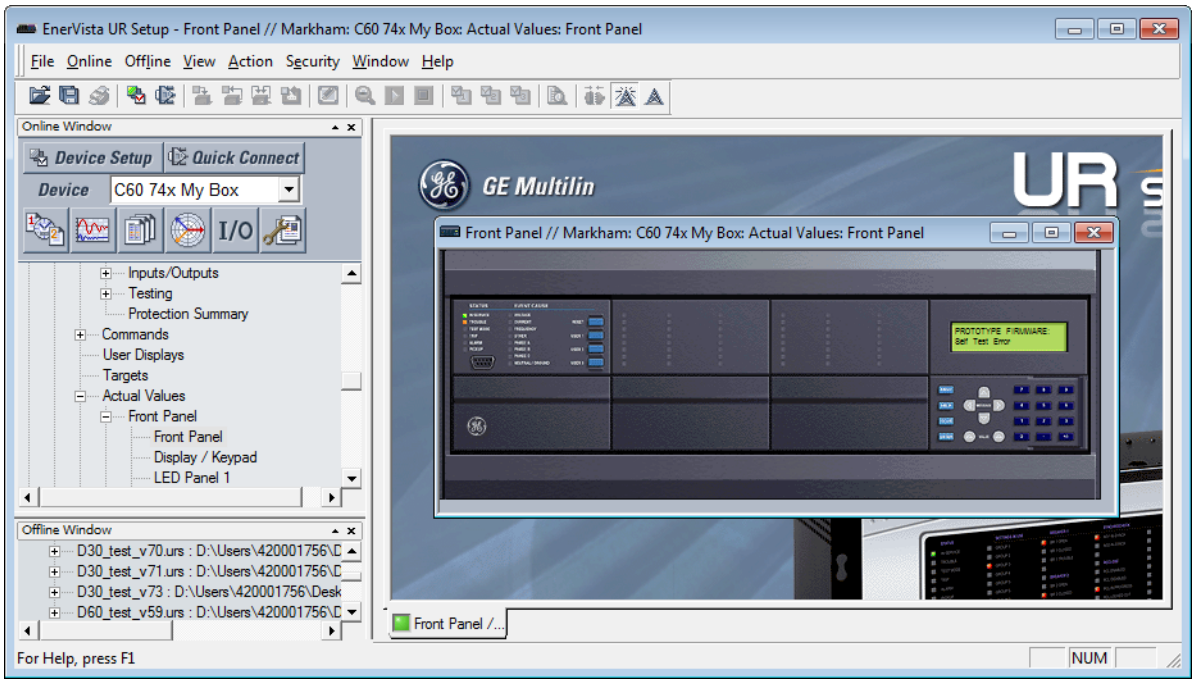

6.2.2 Graphical front panel

SOFTWARE OPTION

The graphical front panel is a hardware option.

Annunciator alarms can be acknowledged and reset, and LEDs and pushbuttons can be viewed.

To view alarms for the graphical front panel in EnerVista:

1. Access **Actual Values > Graphical Panel > Annunciator Panel**. Alarms are listed, allowing remote acknowledgement/ reset.
2. Click the **Acknowledge** or **Reset** button for an alarm.

Figure 6-2: Annunciator alarms displayed in the software)

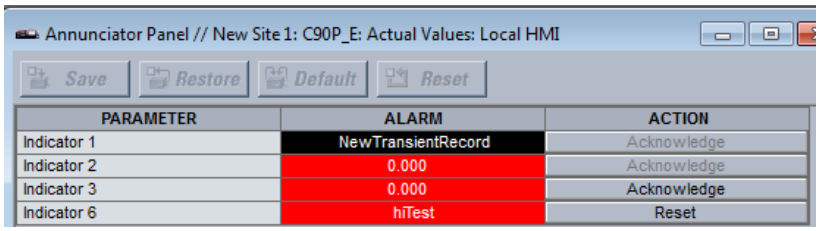

To view LEDs and pushbuttons on the graphical front panel in EnerVista:

1. Access **Actual Values > Graphical Panel > LEDs** or **Pushbuttons**. The window displays.

6.3 Status

6.3.1 IED

ACTUAL VALUES ⇨ STATUS ⇨⇩ IED

■ IED ■	⇔	IED BEHAVIOUR: On	Range: On, Test, Test-Blocked
	⇧	SIMULATION MODE STATUS: Disabled	Range: Disabled, Enabled Displays with IEC 61850

IED BEHAVIOUR — Displays the **SETTINGS ⇨⇩ TESTING ⇨⇩ IED MODE CONFIG ⇨⇩ IED MODE** value.

SIMULATION MODE STATUS — Displays the **SETTINGS ⇨⇩ SIMULATION ⇨ SUBSCRIBE TO SIMULATED VALUES ⇨ SIMULATION MODE** value, meaning if simulation mode is enabled or disabled on a device.

6.3.2 Contact inputs

ACTUAL VALUES ⇨ STATUS ⇨ CONTACT INPUTS

■ CONTACT INPUTS ■	⇔	Cont Ip 1 Off	Range: On, Off
		⇩	
	⇧	Cont Ip xx Off	Range: On, Off

The present status of the contact inputs is shown here. The first line of a message display indicates the ID of the contact input. For example, 'Cont Ip 1' refers to the contact input in terms of the default name-array index. The second line of the display indicates the logic state of the contact input.

6.3.3 Virtual inputs

ACTUAL VALUES ⇨ STATUS ⇨⇩ VIRTUAL INPUTS

■ VIRTUAL INPUTS ■	⇔	Virt Ip 1 Off	Range: On, Off
		⇩	
	⇧	Virt Ip 128 Off	Range: On, Off

The present status of the 128 virtual inputs is shown here. The first line of a message display indicates the ID of the virtual input. For example, 'Virt Ip 1' refers to the virtual input in terms of the default name. The second line of the display indicates the logic state of the virtual input.

6.3.4 RxGOOSE boolean inputs

ACTUAL VALUES ⇨ STATUS ⇨⇩ RxGOOSE BOOLEANS

■ RxGOOSE BOOLEANS ■	⇔	RxGOOSE BOOLEAN 1 STATUS: Off	Range: On, Off
		⇩	
	⇧	RxGOOSE BOOLEAN 256 STATUS: Off	Range: On, Off

This menu displays when the product includes an IEC 61850 software option.

6.3.5 RxGOOSE DPS inputs

ACTUAL VALUES ⇨ STATUS ⇨⇩ RxGOOSE DPS

■ RxGOOSE DPS ■	⇔	RxGOOSE DPS 1 Status: intermediate	Range: On, Off, intermediate, Bad
		⇩	
	⇧	RxGOOSE DPS 16 Status: intermediate	Range: On, Off, intermediate, Bad

This menu displays when the product includes an IEC 61850 software option.

6.3.6 Teleprotection inputs

ACTUAL VALUES ⇨ STATUS ⇨⇩ TELEPROTECTION INPUTS

■ TELEPROTECTION ■ INPUTS	⇔	TELEPROTECTION INPUT 1-1: Off	Range: On, Off
		⇩	
	⇧⇩	TELEPROTECTION INPUT 1-16: Off	Range: On, Off
	⇧⇩	TELEPROTECTION INPUT 2-1: Off	Range: On, Off
		⇩	
	⇧	TELEPROTECTION INPUT 2-16: Off	Range: On, Off

The present state of teleprotection inputs from communication channels 1 and 2 are shown here. The state displayed is that of corresponding remote output unless the channel is declared failed.

6.3.7 Contact outputs

ACTUAL VALUES ⇨ STATUS ⇨⇩ CONTACT OUTPUTS

■ CONTACT OUTPUTS ■	⇔	Cont Op 1 Off	Range: On, Off, VOff, VOn, IOn, IOff
		⇩	
	⇧	Cont Op xx Off	Range: On, Off, VOff, VOn, IOn, IOff

The present state of the contact outputs is shown here. The first line of a message display indicates the ID of the contact output. For example, 'Cont Op 1' refers to the contact output in terms of the default name-array index. The second line of the display indicates the logic state of the contact output.

For form-A contact outputs, the state of the voltage and current detectors is displayed as Off, VOff, IOff, On, IOn, and VOn. For form-C contact outputs, the state is displayed as Off or On.

6.3.8 Virtual outputs

ACTUAL VALUES ⇨ STATUS ⇨⇩ VIRTUAL OUTPUTS

■ VIRTUAL OUTPUTS ■	⇔	Virt Op 1 Off	Range: On, Off
		⇩	
	⇧	Virt Op 128 Off	Range: On, Off

The present state of up to 128 virtual outputs is shown here. The first line of a message display indicates the ID of the virtual output. For example, 'Virt Op 1' refers to the virtual output in terms of the default name-array index. The second line of the display indicates the logic state of the virtual output, as calculated by the FlexLogic equation for that output.

6.3.9 RxGOOSE status

ACTUAL VALUES ⇨ STATUS ⇨⇩ RxGOOSE STATUS

■ RxGOOSE ■ STATUS	⇔	All RxGOOSE Online: Yes	Range: Yes, No
	⇩	RxGOOSE 1 Status: Offline	Range: Online, Offline
		⇩	
	⇧	RxGOOSE 64 Status: Offline	Range: Online, Offline

This menu displays when the product includes an IEC 61850 software option.

The **All RxGOOSE Online** actual value does not consider RxGOOSE that are not configured or are not used by any RxGOOSE Input.

6

6.3.10 RxGOOSE statistics

ACTUAL VALUES ⇨ STATUS ⇨⇩ RxGOOSE STATISTICS ⇨⇩ RxGOOSE 1(64)

■ RxGOOSE 1 ■	⇔	RxGOOSE 1 stNum 0	Range: 0 up to 4,294,967,295
	⇧	RxGOOSE 1 sqNum 0	Range: 0 up to 4,294,967,295

This menu displays when the product includes an IEC 61850 software option.

stNum — State number. The most recently received value in GOOSE message field stNum. The publisher increments stNum each time that the state of one or more of the GOOSE message members is sent with a revised value.

sqNum — Sequence number. The most recently received value in GOOSE message field sqNum. The publisher sets sqNum to zero each time the state of one or more of the GOOSE message members is sent with a new value, and it increments it whenever a GOOSE message is resent without any member value change.

6.3.11 Digital counters

ACTUAL VALUES ⇨ STATUS ⇨⇩ DIGITAL COUNTERS ⇨ DIGITAL COUNTERS Counter 1(8)

■ DIGITAL COUNTERS ■ Counter 1	⇔	Counter 1 ACCUM: 0	
	⇩	Counter 1 FROZEN: 0	
	⇩	Counter 1 FROZEN: 1970/01/01 00:00:00	Range: YYYY/MM/DD HH:MM:SS
	⇩	Counter 1 MICROS: 0	Range: 0 to 4294967295 in steps of 1

The present status of the eight digital counters displays here. The status of each counter, with the user-defined counter name, includes the accumulated and frozen counts (the count units label also appears). Also included, is the date and time stamp for the frozen count. The **COUNTER 1 MICROS** value refers to the microsecond portion of the time stamp.

6.3.12 Selector switches

ACTUAL VALUES ⇨ STATUS ⇨⇩ SELECTOR SWITCHES

■ SELECTOR SWITCHES ■	⇔	SELECTOR SWITCH 1 POSITION: 0/7	Range: Current Position / 7
	⇩	SELECTOR SWITCH 2 POSITION: 0/7	Range: Current Position / 7

The display shows both the current position and the full range. The current position only (an integer from 0 through 7) is the actual value.

6

6.3.13 Flex States

ACTUAL VALUES ⇨ STATUS ⇨⇩ FLEX STATES

■ FLEX STATES ■	⇔	PARAM 1: Off Off	Range: On, Off
	⇩		
	⇩	PARAM 256: Off Off	Range: On, Off

There are 256 FlexState™ bits available. The second line value indicates the state of the given FlexState bit.

6.3.14 Time of day timers

ACTUAL VALUES ⇨ STATUS ⇨⇩ TIME OF DAY TIMERS

■ TIME OF DAY TIMERS ■	⇔	TIME OF DAY TIMER 1: Off	Range: On, Off
	⇩	TIME OF DAY TIMER 2: Off	Range: On, Off
	⇩	TIME OF DAY TIMER 3: Off	Range: On, Off
	⇩	TIME OF DAY TIMER 4: Off	Range: On, Off
	⇩	TIME OF DAY TIMER 5: Off	Range: On, Off

This menu displays the current state of each time of day timer.

6.3.15 Ethernet

ACTUAL VALUES ⇨ STATUS ⇨⇩ ETHERNET

■ ETHERNET ■	⇔	ETHERNET PRI LINK STATUS: Fail	Range: Fail, OK
	⇩	ETHERNET SEC LINK STATUS: OK	Range: Fail, OK
	⇧	ETHERNET TER LINK STATUS: Fail	Range: Fail, OK

These values indicate the status of the first, second, and third Ethernet ports.

6.3.16 Real time clock synchronizing

ACTUAL VALUES ⇨ STATUS ⇨⇩ REAL TIME CLOCK SYNCHRONIZING

■ REAL TIME CLOCK ■ SYNCHRONIZING	⇔	RTC SYNC SOURCE: None	Range: None, Port 1(3) PTP Clock, IRIG-B, Other, Process Bus Module Clock, SNTP1, SNTP2
	⇩	GRANDMASTER ID: 0000000000000000	Range: any 8 octet value
	⇩	ACCURACY: 999999999 ns	Range: 0 to 999,999,999 ns
	⇩	PORT 1 PTP STATE: No Signal	Range: Disabled, No Signal, Calibrating, Synch'd (No Pdelay), Synchronized
	⇩	PORT 2 PTP STATE: No Signal	Range: Disabled, No Signal, Calibrating, Synch'd (No Pdelay), Synchronized
	⇩	PORT 3 PTP STATE: No Signal	Range: Disabled, No Signal, Calibrating, Synch'd (No Pdelay), Synchronized
	⇧	PTP - IRIG-B DELTA: 500000000 ns	Range: -500,000,000 to +500,000,000 ns

SOFTWARE OPTION

This menu displays when the product includes an IEEE 1588 software option.

RTC SYNC SOURCE — The time synchronizing source the relay is using at present. Possible sources include Port 1 PTP Clock to Port 3 PTP Clock. A value of Other means a less precise source (IEC 103, IEC 104, Modbus, DNP). An actual value displays when the relay includes the IEEE 1588 software option.

GRANDMASTER ID — The grandmasterIdentity code being received from the present PTP grandmaster, if any. When the relay is not using any PTP grandmaster, this actual value is zero. The grandmasterIdentity code is specified by PTP to be globally unique, so one can always know which clock is grandmaster in a system with multiple grandmaster-capable clocks.

ACCURACY — The estimated maximum time error at present in the RTC, considering the quality information imbedded in the received time signal. The value 999,999,999 indicates that the magnitude of the estimated error is one second or more, or that the error cannot be estimated.

PORT 1...3 PTP STATE — The present state of the port's PTP clock. The PTP clock state is:

- **Disabled** if the port's function setting is Disabled
- **No Signal** if enabled but no signal from an active master has been found and selected
- **Calibrating** if an active master has been selected but lock is not at present established

- **Synch'd (No Pdelay)** if the port is synchronized, but the peer delay mechanism is non-operational
- **Synchronized** if synchronized

PTP - IRIG-B DELTA — The time difference, measured in nanoseconds, between the fractional seconds portion of the time being received via PTP and that being received via IRIG-B. A positive value indicates that PTP time is fast compared to IRIG-B time.

6.3.17 Direct inputs

ACTUAL VALUES ⇨ STATUS ⇨⇩ DIRECT INPUTS

```
■ DIRECT INPUTS
■
```

⇔

```
AVERAGE MSG RETURN
TIME CH1:  0 ms
```

⇕

```
UNRETURNED MSG
COUNT CH1:        0
```

⇕

```
CRC FAIL COUNT
CH1:       0
```

⇕

```
AVERAGE MSG RETURN
TIME CH2:  0 ms
```

⇕

```
UNRETURNED MSG
COUNT CH2:        0
```

⇕

```
CRC FAIL COUNT
CH2:       0
```

⇕

```
DIRECT INPUT  1
On
```

⇩

⇧

```
DIRECT INPUT 32
On
```

6

The **AVERAGE MSG RETURN TIME** is the time taken for direct output messages to return to the sender in a direct input/output ring configuration (this value is not applicable for non-ring configurations). This is a rolling average calculated for the last ten messages. There are two return times for dual-channel communications modules.

The **UNRETURNED MSG COUNT** values (one per communications channel) count the direct output messages that do not make the trip around the communications ring. The **CRC FAIL COUNT** values (one per communications channel) count the direct output messages that have been received but fail the CRC check. High values for either of these counts can indicate on a problem with wiring, the communication channel, or one or more relays. The **UNRETURNED MSG COUNT** and **CRC FAIL COUNT** values can be cleared using the **CLEAR DIRECT I/O COUNTERS** command.

The **DIRECT INPUT 1** to **DIRECT INPUT (32)** values represent the state of each direct input.

6.3.18 Direct devices status

ACTUAL VALUES ⇨ STATUS ⇨⇩ DIRECT DEVICES STATUS

```
■ DIRECT DEVICES
■ STATUS
```

⇔

```
DIRECT DEVICE 1
STATUS:  Offline
```

Range: Offline, Online

⇩

⇧

```
DIRECT DEVICE 16
STATUS:  Offline
```

Range: Offline, Online

These actual values represent the state of direct devices 1 through 16.

6.3.19 Teleprotection channel tests

ACTUAL VALUES ⇨ STATUS ⇨⇩ TELEPROT CH TESTS

■ TELEPROT CH TESTS ■	⇔	CHANNEL 1 STATUS: n/a	Range: n/a, FAIL, OK
	⇩	CHANNEL 1 LOST PACKETS: 1	Range: 1 to 65535 in steps of 1
	⇩	CHANNEL 2 STATUS: n/a	Range: n/a, FAIL, OK
	⇩	CHANNEL 2 LOST PACKETS: 1	Range: 1 to 65535 in steps of 1
	⇧	VALIDITY OF CHANNEL CONFIGURATION: FAIL	Range: n/a, FAIL, OK

The status information for two channels is shown here.

CHANNEL 1 STATUS — This represents the receiver status of each channel. If the value is "OK," teleprotection is enabled and data is being received from the remote terminal; If the value is "FAIL," teleprotection enabled and data is not being received from the remote terminal. If "n/a," teleprotection is disabled.

CHANNEL 1 LOST PACKETS — Data is transmitted to the remote terminals in data packets at a rate of two packets per cycle. The number of lost packets represents data packets lost in transmission; this count can be reset to 0 through the **COMMANDS ⇨⇩ CLEAR RECORDS** menu.

VALIDITY OF CHANNEL CONFIGURATION — This value displays the current state of the communications channel identification check, and hence validity. If a remote relay ID does not match the programmed ID at the local relay, the "FAIL" message displays. The "N/A" value appears if the local relay ID is set to a default value of "0," the channel is failed, or if the teleprotection inputs/outputs are not enabled.

6.3.20 Remaining connection status

ACTUAL VALUES ⇨ STATUS ⇨⇩ COMM STATUS REMAINING CONNECT

■ COMM STATUS ■ REMAINING CONNECT	⇔	MMS TCP (max 5) 5	Range: 0 to 5
	⇩	Modbus TCP (max 4) 4	Range: 0 to 4
	⇩	DNP TCP (max 2) 2	Range: 0 to 2
	⇩	IEC-104 TCP (max 2) 2	Range: 0 to 2
	⇧	SFTP (max 4) 4	Range: 0 to 4

These values specify the remaining number of TCP connections still available for each protocol. The display depends on the options applicable to your device. Each time a connection is used, the remaining number of connections decrements. When released, the remaining number of connections increments. If no connection is made over the specific protocol, the number equals the maximum number available for the specific protocol.

For example, the maximum number of Modbus TCP connections is 4. Once an EnerVista session is opened on a computer connected to the UR over Ethernet, the Modbus TCP status shows 3. If the EnerVista application is closed, the Modbus TCP status shows 4.

For the graphical front panel, the remaining connections refer to TCP connections only.

MMS TCP — The number of IEC 61850 connections remaining.

6.3.21 Parallel Redundancy Protocol (PRP)

The Parallel Redundancy Protocol (PRP) defines a redundancy protocol for high availability in substation automation networks.

ACTUAL VALUES ⇨ STATUS ⇨⇩ PRP STATUS

■ **PRP STATUS** ■	⇔	**Total Rx Port A:** 0	Range: 0 to 4G, blank if PRP disabled
	⇩	**Total Rx Port B:** 0	Range: 0 to 4G, blank if PRP disabled
	⇩	**Mismatches Port A:** 0	Range: 0 to 4G, blank if PRP disabled
	⇩	**Mismatches Port B:** 0	Range: 0 to 4G, blank if PRP disabled
	⇧	**Total Errors:** 0	Range: 0 to 4G, blank if PRP disabled

SOFTWARE OPTION

This menu displays when the product includes a PRP software option.

Total Received Port A is a counter for total messages received (either from DANPs or from SANs) on Port A.

Total Received Port B is a counter for total messages received (either from DANPs or from SANs) on Port B.

Total Errors is a counter for total messages received with an error (bad port code, frame length too short).

Mismatches Port A is a counter for total messages received with an error on Port A (PRP frame, but port received through and LAN ID in the frame do not match).

Mismatches Port B is a counter for total messages received with an error on Port B (PRP frame, but port received through and LAN ID in the frame do not match).

6

6.3.22 TxGOOSE status

ACTUAL VALUES ⇨ STATUS ⇨⇩ TxGOOSE STATUS

■ **TxGOOSE STATUS** ■	⇔	**R-TxGOOSE 1** **ARP: Off**	Range: On, Off
	⇩		
	⇧	**R-TxGOOSE 16** **ARP: Off**	Range: On, Off

SOFTWARE OPTION

This menu displays when the product includes an IEC 61850 software option.

This status is relevant to R-GOOSE reception when configured for SSM or ASM reception modes. It is not relevant for GOOSE or for R-GOOSE in unicast reception mode.

ARP — The unicast mode of R-GOOSE transmission requires Address Resolution Protocol (ARP) for the resolution of the network layer address into the MAC layer address. R-TxGOOSE## ARP status On indicates that ARP responses are being received and the destination MAC address for R-GOOSE transmissions has been obtained. This status remains Off if TxGOOSE## is not configured for R-GOOSE. It also remains Off if setting R-TxGOOSE1 DST IP is set to a multicast address. In the case where setting R-TxGOOSE1 DST IP is configured with a unicast address and this status indicates Off, TxGOOSE## transmission will be off, and therefore communication network diagnosis needs to be carried out.

This status is only applicable for R-GOOSE transmission with setting R-TxGOOSE1 DST IP set to a unicast IP address. It is not applicable for GOOSE or for R-GOOSE when setting R-TxGOOSE1 DST IP is multicast.

6.3.23 Protocol

ACTUAL VALUES ⇨ STATUS ⇨⇩ PROTOCOL

■ **PROTOCOL** ■	⇔	**IEC61850 EDITION:** **Edition2**	Range: Edition1, Edition2

This menu displays when the product includes an IEC 61850 software option.

Displays the IEC 61850 edition currently being used, as set under **Settings > Product Setup > Communications > Protocol > IEC61850 SCL Edition**. This value displays only on the front panel.

6.4 Metering

6.4.1 Metering conventions

6.4.1.1 UR convention for measuring power and energy

The figure illustrates the conventions established for use in UR devices.

6

Figure 6-3: Flow direction of signed values for watts and VARs

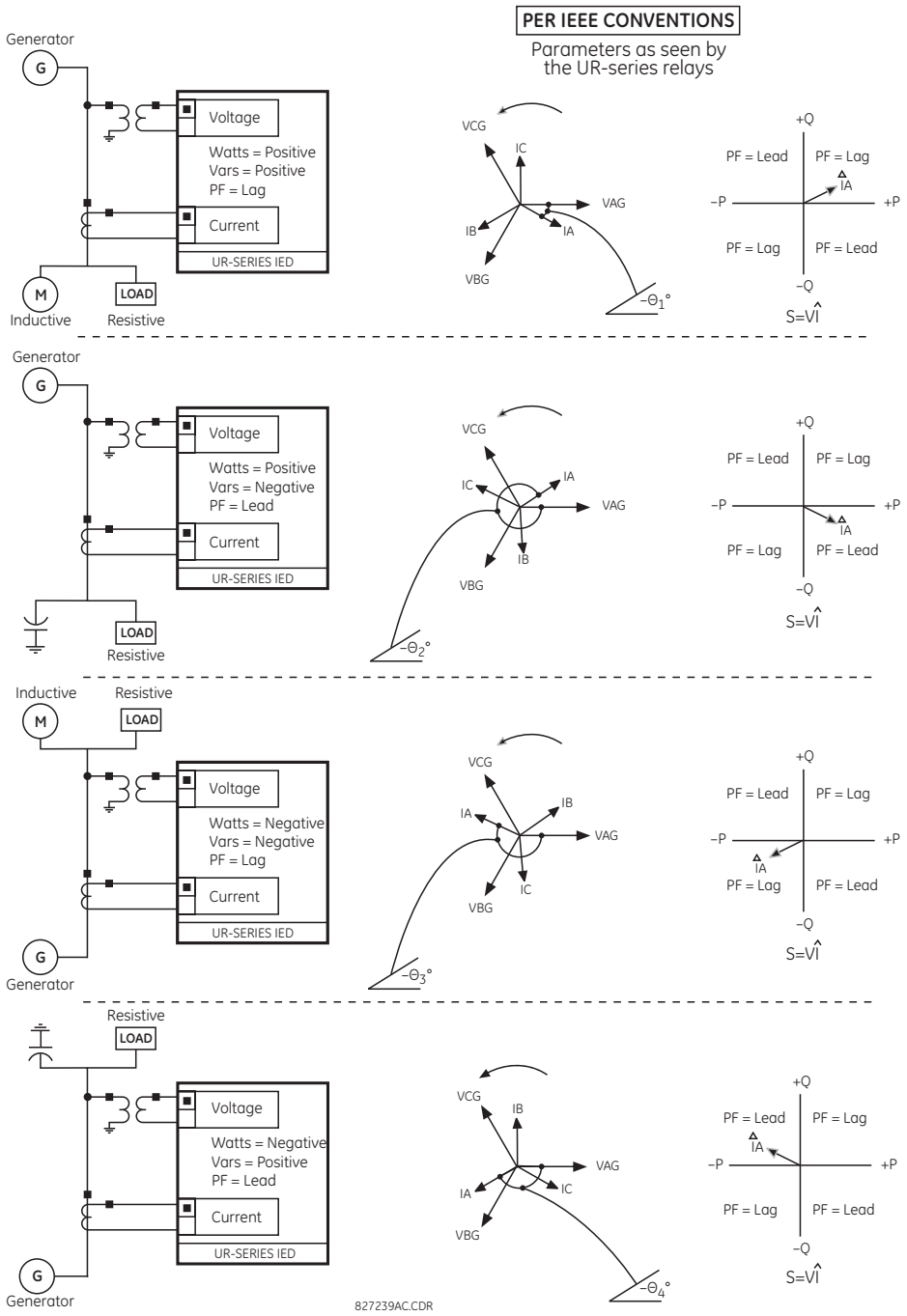

6.4.1.2 UR convention for measuring phase angles

All phasors calculated by URs and used for protection, control and metering functions are rotating phasors that maintain the correct phase angle relationships with each other at all times.

For display and oscillography purposes, all phasor angles in a given relay are referred to an AC input channel pre-selected by the **SETTINGS ⇨⇩ SYSTEM SETUP ⇨⇩ POWER SYSTEM ⇨⇩ FREQUENCY AND PHASE REFERENCE** setting. This setting defines a particular AC signal source to be used as the reference.

The relay first determines if any "Phase VT" bank is indicated in the source. If it is, voltage channel VA of that bank is used as the angle reference. Otherwise, the relay determines if any "Aux VT" bank is indicated; if it is, the auxiliary voltage channel of that bank is used as the angle reference. If neither of the two conditions is satisfied, then two more steps of this hierarchical procedure to determine the reference signal include "Phase CT" bank and "Ground CT" bank.

If the AC signal pre-selected by the relay upon configuration is not measurable, the phase angles are not referenced. The phase angles are assigned as positive in the leading direction, and are presented as negative in the lagging direction, to more closely align with power system metering conventions. The figure illustrates this.

Figure 6-4: UR phase angle measurement convention

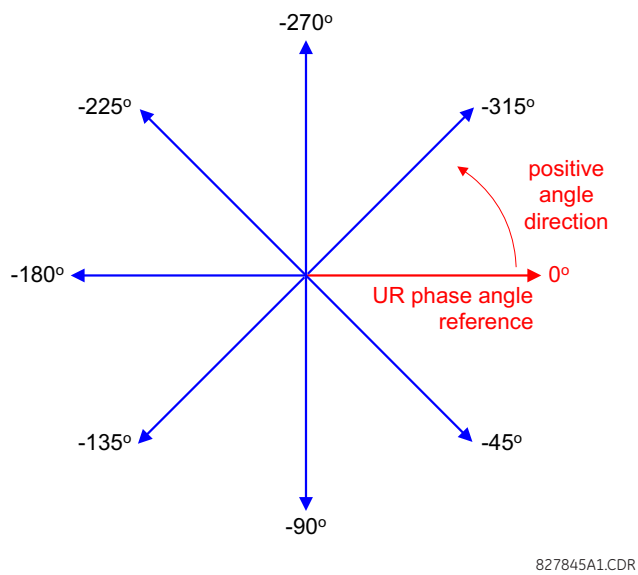

6.4.1.3 UR convention for measuring symmetrical components

The URs calculate voltage symmetrical components for the power system phase A line-to-neutral voltage, and symmetrical components of the currents for the power system phase A current. Owing to the above definition, phase angle relations between the symmetrical currents and voltages stay the same irrespective of the connection of instrument transformers. This is important for setting directional protection elements that use symmetrical voltages.

For display and oscillography purposes the phase angles of symmetrical components are referenced to a common reference as described in the previous sub-section.

WYE-connected instrument transformers

- ABC phase rotation:

$$V_0 = \frac{1}{3}(V_{AG} + V_{BG} + V_{CG})$$

$$V_1 = \frac{1}{3}(V_{AG} + aV_{BG} + a^2V_{CG})$$

$$V_2 = \frac{1}{3}(V_{AG} + a^2V_{BG} + aV_{CG})$$

- ACB phase rotation:

$$V_0 = \frac{1}{3}(V_{AG} + V_{BG} + V_{CG})$$

$$V_1 = \frac{1}{3}(V_{AG} + a^2V_{BG} + aV_{CG})$$

$$V_2 = \frac{1}{3}(V_{AG} + aV_{BG} + a^2V_{CG})$$

The above equations apply to currents as well.

DELTA-connected instrument transformers

- ABC phase rotation:

$$V_0 = N/A$$
$$V_1 = \frac{1\angle -30^\circ}{3\sqrt{3}}(V_{AB} + aV_{BC} + a^2V_{CA})$$
$$V_2 = \frac{1\angle 30^\circ}{3\sqrt{3}}(V_{AB} + a^2V_{BC} + aV_{CA})$$

- ACB phase rotation:

$$V_0 = N/A$$
$$V_1 = \frac{1\angle 30^\circ}{3\sqrt{3}}(V_{AB} + a^2V_{BC} + aV_{CA})$$
$$V_2 = \frac{1\angle -30^\circ}{3\sqrt{3}}(V_{AB} + aV_{BC} + a^2V_{CA})$$

The zero-sequence voltage is not measurable under the Delta connection of instrument transformers and is defaulted to zero. The table below shows an example of symmetrical components calculations for the ABC phase rotation.

Table 6-1: Symmetrical components calculation example

SYSTEM VOLTAGES, sec. V *						VT conn.	relay INPUTS, sec. V			SYMM. COMP, sec. V		
V_{AG}	V_{BG}	V_{CG}	V_{AB}	V_{BC}	V_{CA}		F5ac	F6ac	F7ac	V_0	V_1	V_2
13.9 ∠0°	76.2 ∠–125°	79.7 ∠–250°	84.9 ∠–313°	138.3 ∠–97°	85.4 ∠–241°	WYE	13.9 ∠0°	76.2 ∠–125°	79.7 ∠–250°	19.5 ∠–192°	56.5 ∠–7°	23.3 ∠–187°
UNKNOWN (only V_1 and V_2 can be determined)			84.9 ∠0°	138.3 ∠–144°	85.4 ∠–288°	DELTA	84.9 ∠0°	138.3 ∠–144°	85.4 ∠–288°	N/A	56.5 ∠–54°	23.3 ∠–234°

* The power system voltages are phase-referenced – for simplicity – to V_{AG} and V_{AB}, respectively. This, however, is a relative matter. It is important to remember that the C70 displays are always referenced as specified under **SETTINGS ⇨⇩ SYSTEM SETUP ⇨⇩ POWER SYSTEM ⇨⇩ FREQUENCY AND PHASE REFERENCE**.

The example above is illustrated in the following figure.

Figure 6-5: Measurement convention for symmetrical components

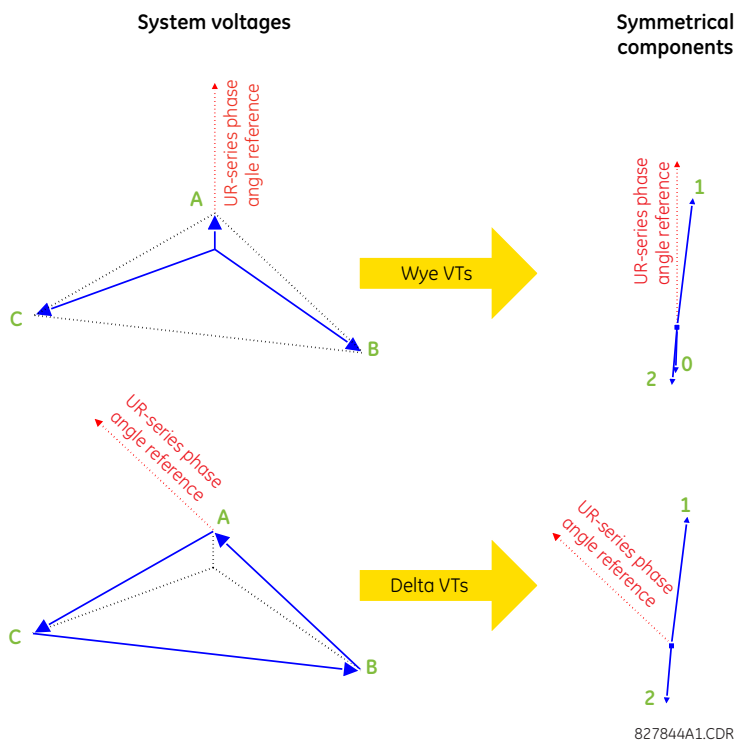

6.4.2 Sources

6.4.2.1 Menu

ACTUAL VALUES ⇨⇩ METERING ⇨⇩ SOURCE SRC 1

■ SOURCE SRC 1 ■	⇔	■ PHASE CURRENT ■ SRC 1	See below
	⇩	■ GROUND CURRENT ■ SRC 1	See page 6-18
	⇩	■ PHASE VOLTAGE ■ SRC 1	See page 6-18
	⇩	■ AUXILIARY VOLTAGE ■ SRC 1	See page 6-19
	⇩	■ POWER ■ SRC 1	See page 6-19
	⇩	■ FREQUENCY ■ SRC 1	See page 6-20
	⇩	■ CURRENT HARMONICS ■ SRC 1	See page 6-20
	⇧	■ VOLTAGE HARMONICS ■ SRC 1	See page 6-21

This menu displays the metered values available for each source.

Metered values presented for each source depend on the phase and auxiliary VTs and phase and ground CTs assignments for this particular source. For example, if no phase VT is assigned to this source, then any voltage, energy, and power values are unavailable.

6.4.2.2 Phase current metering

ACTUAL VALUES ⇨⇩ METERING ⇨ SOURCE SRC 1 ⇨ PHASE CURRENT

■ PHASE CURRENT ■ SRC 1	⇔	SRC 1 RMS Ia: 0.000 b: 0.000 c: 0.000 kA
	⇩	SRC 1 RMS Ia: 0.000 kA
	⇩	SRC 1 RMS Ib: 0.000 kA
	⇩	SRC 1 RMS Ic: 0.000 kA
	⇩	SRC 1 RMS In: 0.000 kA
	⇩	SRC 1 PHASOR Ia: 0.000 kA 0.0°
	⇩	SRC 1 PHASOR Ib: 0.000 kA 0.0°
	⇩	SRC 1 PHASOR Ic: 0.000 kA 0.0°
	⇩	SRC 1 PHASOR In: 0.000 kA 0.0°
	⇩	SRC 1 ZERO SEQ I0: 0.000 kA 0.0°

```
⇕  SRC 1  POS SEQ I1:
    0.000  kA      0.0°

⇧  SRC 1  NEG SEQ I2:
    0.000  kA      0.0°
```

The metered phase current values are displayed in this menu. The "SRC 1" text gets replaced by whatever name was programmed by the user for the associated source (see **SETTINGS ⇨⇩ SYSTEM SETUP ⇨⇩ SIGNAL SOURCES**).

6.4.2.3 Ground current metering

ACTUAL VALUES ⇨⇩ METERING ⇨ SOURCE SRC 1 ⇨ GROUND CURRENT

```
■ GROUND CURRENT
■ SRC 1

⇔  SRC 1  RMS Ig:
    0.0  A

⇕  SRC 1  PHASOR Ig:
    0.0  A      0.0°

⇧  SRC 1  PHASOR Igd:
    0.000  kA      0.0°
```

The metered ground current values are displayed in this menu. The "SRC 1" text is replaced by the name programmed by the user for the associated source (see **SETTINGS ⇨⇩ SYSTEM SETUP ⇨⇩ SIGNAL SOURCES**).

6.4.2.4 Phase voltage metering

ACTUAL VALUES ⇨⇩ METERING ⇨ SOURCE SRC 1 ⇨ PHASE VOLTAGE

```
■ PHASE VOLTAGE
■ SRC 1

⇔  SRC 1  RMS Vag:
    0.0  V

⇕  SRC 1  RMS Vbg:
    0.0  V

⇕  SRC 1  RMS Vcg:
    0.0  V

⇕  SRC 1  PHASOR Vag:
    0.0  V      0.0°

⇕  SRC 1  PHASOR Vbg:
    0.0  V      0.0°

⇕  SRC 1  PHASOR Vcg:
    0.0  V      0.0°

⇕  SRC 1  RMS Vab:
    0.0  V

⇕  SRC 1  RMS Vbc:
    0.0  V

⇕  SRC 1  RMS Vca:
    0.0  V

⇕  SRC 1  PHASOR Vab:
    0.0  V      0.0°

⇕  SRC 1  PHASOR Vbc:
    0.0  V      0.0°

⇕  SRC 1  PHASOR Vca:
    0.0  V      0.0°

⇕  SRC 1  ZERO SEQ V0:
    0.0  V      0.0°
```

```
⇕  SRC 1  POS SEQ V1:
     0.0  V      0.0°

⇧  SRC 1  NEG SEQ V2:
     0.0  V      0.0°
```

The metered phase voltage values are displayed in this menu. The "SRC 1" text is replaced by the name programmed by the user for the associated source (see **SETTINGS ⇨⇩ SYSTEM SETUP ⇨⇩ SIGNAL SOURCES**).

6.4.2.5 Auxiliary voltage metering

ACTUAL VALUES ⇨⇩ METERING ⇨ SOURCE SRC 1 ⇨⇩ AUXILIARY VOLTAGE

```
■ AUXILIARY VOLTAGE
■ SRC 1

⇔  SRC 1  RMS Vx:
    0.00  V

⇧  SRC 1  PHASOR Vx:
    0.00  V      0.0°
```

The metered auxiliary voltage values are displayed in this menu. The "SRC 1" text is replaced by the name programmed by the user for the associated source (see **SETTINGS ⇨⇩ SYSTEM SETUP ⇨⇩ SIGNAL SOURCES**).

6.4.2.6 Power metering

ACTUAL VALUES ⇨⇩ METERING ⇨ SOURCE SRC 1 ⇨⇩ POWER

```
■ POWER
■ SRC 1

⇔  SRC 1  REAL POWER
   3ϕ:   0.0  kW

⇕  SRC 1  REAL POWER
   ϕa:   0.0  kW

⇕  SRC 1  REAL POWER
   ϕb:   0.0  kW

⇕  SRC 1  REAL POWER
   ϕc:   0.0  kW

⇕  SRC 1  REACTIVE PWR
   3ϕ:   0.0  kvar

⇕  SRC 1  REACTIVE PWR
   ϕa:   0.0  kvar

⇕  SRC 1  REACTIVE PWR
   ϕb:   0.0  kvar

⇕  SRC 1  REACTIVE PWR
   ϕc:   0.0  kvar

⇕  SRC 1  APPARENT PWR
   3ϕ:   0.0  kVA

⇕  SRC 1  APPARENT PWR
   ϕa:   0.0  kVA

⇕  SRC 1  APPARENT PWR
   ϕb:   0.0  kVA

⇕  SRC 1  APPARENT PWR
   ϕc:   0.0  kVA

⇕  SRC 1  POWER FACTOR
   3ϕ:    1.000

⇕  SRC 1  POWER FACTOR
   ϕa:    1.000
```

6

```
⇕  SRC 1  POWER FACTOR
   ϕb:     1.000

⇧  SRC 1  POWER FACTOR
   ϕc:     1.000
```

This menu displays metered values for real, reactive, and apparent power, as well as power factor. The "SRC 1" text is replaced by the name programmed by the user for the associated source (see **SETTINGS ⇨⇩ SYSTEM SETUP ⇨⇩ SIGNAL SOURCES**).

When VTs are configured in wye, the C70 calculates power in each phase and three-phase power is measured as

$$S = V_A \times \hat{I}_A + V_B \times \hat{I}_B + V_C \times \hat{I}_C \qquad \textbf{Eq. 6-1}$$

When VTs are configured in delta, the C70 does not calculate power in each phase and three-phase power is measured as

$$S = V_{AB} \times \hat{I}_A + V_{CB} \times \hat{I}_C \qquad \textbf{Eq. 6-2}$$

where

S is the apparent power

V_A, V_B, V_C, I_A, I_B, I_C are phase voltage and phase current phasors

V_{AB} and V_{CB} are phase-to-phase voltage phasors

$\hat{I}$ is the conjugate of I

6.4.2.7 Frequency metering

ACTUAL VALUES ⇨⇩ METERING ⇨ SOURCE SRC 1 ⇨⇩ FREQUENCY

```
■ FREQUENCY
■ SRC 1
```

⇔

```
SRC 1  FREQUENCY:
 0.000 Hz
```

The metered frequency values are displayed in this menu. The "SRC 1" text is replaced by the name programmed by the user for the associated source (see **SETTINGS ⇨⇩ SYSTEM SETUP ⇨⇩ SIGNAL SOURCES**).

SOURCE FREQUENCY is measured via software-implemented zero-crossing detection of an AC signal. The signal is either a Clarke transformation of three-phase voltages or currents, auxiliary voltage, or ground current as per source configuration (see the **SYSTEM SETUP ⇨⇩ POWER SYSTEM** settings). The signal used for frequency estimation is low-pass filtered. The final frequency measurement is passed through a validation filter that eliminates false readings due to signal distortions and transients.

6.4.2.8 Current harmonics and THD metering

ACTUAL VALUES ⇨⇩ METERING ⇨ SOURCE SRC 1 ⇨⇩ CURRENT HARMONICS

```
■ CURRENT HARMONICS
■ SRC 1
```

```
⇔  SRC 1   THD Ia:  0.0
   Ib:  0.0 Ic:  0.0%

⇕  SRC 1   2ND Ia:  0.0
   Ib:  0.0 Ic:  0.0%

⇕  SRC 1   3RD Ia:  0.0
   Ib:  0.0 Ic:  0.0%
                ⇩
⇧  SRC 1  25TH Ia:  0.0
   Ib:  0.0 Ic:  0.0%
```

This menu displays metered current harmonics values. The "SRC 1" text is replaced by the name was programmed for the associated source (see **SETTINGS ⇨⇩ SYSTEM SETUP ⇨⇩ SIGNAL SOURCES**). Current harmonics are measured for each source for the total harmonic distortion (THD) and 2nd to 25th harmonics per phase.

6.4.2.9 Voltage harmonics and THD metering

ACTUAL VALUES ⇨⇩ METERING ⇨ SOURCE SRC 1 ⇨⇩ VOLTAGE HARMONICS

```
■ VOLTAGE HARMONICS      ⇔   SRC 1   THD Va:  0.0
■ SRC 1                      Vb:  0.0 Vc:  0.0%
                         ⇕   SRC 1   2ND Va:  0.0
                             Vb:  0.0 Vc:  0.0%
                         ⇕   SRC 1   3RD Va:  0.0
                             Vb:  0.0 Vc:  0.0%
                                      ⇩
                         ⇧   SRC 1  25TH Va:  0.0
                             Vb:  0.0 Vc:  0.0%
```

This menu displays metered voltage harmonics values. The "SRC 1" text is replaced by the programmed name for the associated source (see the **SETTINGS ⇨⇩ SYSTEM SETUP ⇨⇩ SIGNAL SOURCES** menu).

To extract the 2nd to 25th voltage harmonics, each harmonic is computed on a per-phase basis, where:

N = 64 is the number of samples per cycle
$\omega_0 = 2\pi f$ is the angular frequency based on the system frequency (50 or 60 Hz)
k = 1, 2,..., N – 1 is the index over one cycle for the Fast Fourier Transform (FFT)
m is the last sample number for the sliding window
h = 1, 2,..., 25 is the harmonic number

The short-time Fourier transform is applied to the unfiltered signal:

$$F_{real}(m,h) = \frac{2}{N}\sum_k (f(m-k)\cdot\cos(h\cdot\omega_0\cdot t(k)))$$

$$F_{imag}(m,h) = \frac{2}{N}\sum_k (f(m-k)\cdot\sin(h\cdot\omega_0\cdot t(k)))$$

$$F_{ampl}(m,h) = \sqrt{F_{real}(m,h)^2 + F_{imag}(m,h)^2} \qquad \textbf{Eq. 6-3}$$

The harmonics are a percentage of the fundamental signal obtained as a ratio of harmonic amplitude to fundamental amplitude multiplied by 100%. The total harmonic distortion (THD) is the ratio of the total harmonic content to the fundamental:

$$THD = \sqrt{F_2^2 + F_3^2 + \ldots + F_{25}^2} \qquad \textbf{Eq. 6-4}$$

NOTE

Voltage harmonics are calculated only for Wye connected phase VTs. Ensure that the **SYSTEM SETUP ⇨ AC INPUTS ⇨⇩ VOLTAGE BANK F5 ⇨⇩ PHASE VT XX CONNECTION** setting is "Wye" to enable voltage harmonics metering.

6.4.3 Tracking frequency

ACTUAL VALUES ⇨⇩ METERING ⇨⇩ TRACKING FREQUENCY

```
■ TRACKING FREQUENCY     ⇔   TRACKING FREQUENCY:
■                            60.00 Hz
```

The tracking frequency displays here. The frequency is tracked based on the selection of the reference source with the **FREQUENCY AND PHASE REFERENCE** setting in the **SETTINGS ⇨⇩ SYSTEM SETUP ⇨⇩ POWER SYSTEM** menu. See the Power System section of chapter 5 for details.

6.4.4 FlexElements

ACTUAL VALUES ⇨⇩ METERING ⇨⇩ FLEXELEMENTS ⇨ FLEXELEMENT 1(16)

■ FLEXELEMENT 1 ■	⇔	FLEXELEMENT 1 OpSig: 0.000

The operating signals for the FlexElements are displayed in pu values using the following definitions of the base units.

Table 6-2: FlexElement base units

Base unit	Description
BREAKER ACC ARCING AMPS (Brk X Acc Arc Amp A, B, and C)	BASE = 2000 $kA^2 \times$ cycle
BREAKER ARCING AMPS (Brk X Arc Amp A, B, and C)	BASE = 1 $kA^2 \times$ cycle
DCmA	BASE = maximum value of the **DCMA INPUT MAX** setting for the two transducers configured under the +IN and –IN inputs.
FREQUENCY	f_{BASE} = 1 Hz
PHASE ANGLE	φ_{BASE} = 360 degrees (see the UR angle referencing convention)
POWER FACTOR	PF_{BASE} = 1.00
RTDs	BASE = 100°C
SOURCE CURRENT	I_{BASE} = maximum nominal primary RMS value of the +IN and –IN inputs
SOURCE POWER	P_{BASE} = maximum value of $V_{BASE} \times I_{BASE}$ for the +IN and –IN inputs
SOURCE THD & HARMONICS	BASE = 1%
SOURCE VOLTAGE	V_{BASE} = maximum nominal primary RMS value of the +IN and –IN inputs

6.4.5 Capacitor control

ACTUAL VALUES ⇨⇩ METERING ⇨⇩ CAPACITOR CONTROL

■ CAPACITOR CONTROL ■	⇔	CAP 1 DISCHARGE TIME: 0 s
		⇩
	⇧	CAP 3 DISCHARGE TIME: 0 s

These values indicate the time remaining before the next permissible close operation for each of the three capacitor banks.

6.4.6 Capacitor bank

6.4.6.1 Menu

ACTUAL VALUES ⇨⇩ METERING ⇨⇩ CAPACITOR BANK

■ CAPACITOR ■ BANK	⇔	■ VOLTAGE ■ DIFFERENTIAL	See below
	⇩	■ NEUTRAL VOLTAGE ■ UNBALANCE	See page 6-23
	⇩	■ NEUTRAL CURRENT ■ UNBALANCE	See page 6-23
	⇧	■ PHASE CURRENT ■ UNBALANCE	See page 6-23

The capacitor bank menu contains the actual values for the voltage differential, neutral voltage unbalance, phase current unbalance, and neutral current unbalance elements.

6.4.6.2 Voltage differential

ACTUAL VALUES ⇨⇩ METERING ⇨⇩ CAPACITOR BANK ⇨ VOLTAGE DIFFERENTIAL ⇨ VOLTAGE DIFFERENTIAL 1(3)

■ VOLTAGE ■ DIFFERENTIAL 1	⇔	Bus Va: 0.0000 pu Dif Va: 0.0000 pu
	⇩	Bus Vb: 0.0000 pu Dif Vb: 0.0000 pu
	⇧	Bus Vc: 0.0000 pu Dif Vc: 0.0000 pu

These actual values display the bus and differential signals in per-unit values of the nominal bus voltage for phases A, B, and C.

6.4.6.3 Neutral voltage unbalance

ACTUAL VALUES ⇨⇩ METERING ⇨⇩ CAPACITOR BANK ⇨ NEUTRAL VOLTAGE... ⇨ NEUTRAL VOLTAGE UNBALANCE 1(3)

■ VOLTAGE VOLTAGE ■ UNBALANCE 1	⇔	NEUTRAL-POINT Vx: 0.0000 pu / 0.0°
	⇩	BUS V0: 0.0000 pu / 0.0°
	⇧	Vop: 0.0000 pu Vrest: 0.0000 pu

This menu displays the magnitudes (in pu) and angles of the neutral point and bus V0 voltages for the neutral voltage unbalance elements. The magnitudes of the compensating operating voltage and restraining voltage (in pu) also display.

6.4.6.4 Neutral current unbalance

ACTUAL VALUES ⇨⇩ METERING ⇨⇩ CAPACITOR BANK ⇨ NEUTRAL CURRENT... ⇨ NEUTRAL CURRENT UNBALANCE 1(3)

■ NEUTRAL CURRENT ■ UNBALANCE 1	⇔	Raw INsp: 0.0000 pu Comp Iop: 0.0000 pu

This menu displays the magnitudes of the raw neutral split-phase current and compensated operating current (in per-units of the ground CT input).

6.4.6.5 Phase current unbalance

ACTUAL VALUES ⇨⇩ METERING ⇨⇩ CAPACITOR BANK ⇨ PHASE CURRENT... ⇨ PHASE CURRENT UNBALANCE 1(3)

■ PHASE CURRENT ■ UNBALANCE 1	⇔	Raw Id A: 0.0000 pu Cm Iop A: 0.0000 pu
	⇩	Raw Id B: 0.0000 pu Cm Iop B: 0.0000 pu
	⇧	Raw Id C: 0.0000 pu Cm Iop C: 0.0000 pu

This menu displays the magnitudes of the raw differential current and compensated operating currents (in per-units of the differential CT) for each phase.

6.4.7 RxGOOSE analogs

ACTUAL VALUES ⇨⇩ METERING ⇨⇩ RxGOOSE Analogs

■ RxGOOSE ■ Analogs	⇔	RxGOOSE Analog 1 0.000
		⇩
	⇧	RxGOOSE Analog 32 0.000

SOFTWARE OPTION

This menu displays when the product includes an IEC 61850 software option.

The RxGOOSE Analog values display in this menu. The RxGOOSE Analog values are received via IEC 61850 GOOSE messages sent from other devices.

6.4.8 Transducer inputs/outputs

ACTUAL VALUES ⇨⇩ METERING ⇨⇩ TRANSDUCER I/O DCMA INPUTS ⇨ DCMA INPUT xx

■ DCMA INPUT xx ■	⇔	DCMA INPUT xx 0.000 mA

Actual values for each DCmA input channel that is enabled are displayed with the top line as the programmed channel ID and the bottom line as the value followed by the programmed units.

ACTUAL VALUES ⇨⇩ METERING ⇨⇩ TRANSDUCER I/O RTD INPUTS ⇨ RTD INPUT xx

■ RTD INPUT xx ■	⇔	RTD INPUT xx -50 °C

Actual values for each RTD input channel that is enabled are displayed with the top line as the programmed channel ID and the bottom line as the value.

6

6.5 Remote resources

6.5.1 Field unit

ACTUAL VALUES ⇨⇩ REMOTE RESOURCES ⇨⇩ FIELD UNIT U1(U8)

■ FIELD UNIT U1 ■ ID: U 1	⇔	FIELD UNIT STATUS: DISABLED	Range: Disabled, Enabled
	⇕	BRICK SERIAL NUMBER:	
	⇕	BRICK ORDER CODE: CC-05	
	⇕	BRICK DIGITAL CORE: 0	
	⇕	LOCAL TRANSCEIVER: TX POWER: 0.0 dBm	
	⇕	BRICK TRANSCEIVER RX POWER: 0.0 dBm	

⇩	BRICK TRANSCEIVER RX POWER: 0.0 dBm
⇧	LOCAL TRANSCEIVER RX POWER: 0.0 dBm

This menu displays when using a Process Bus Module for a HardFiber Brick.

6.6 Process Bus Module

6.6.1 General status

ACTUAL VALUES ⇨⇩ PB MODULE ⇨ GENERAL STATUS

■ GENERAL STATUS ■	⇔	NETWORK CONFIG: INDEPENDENT	Range: INDEPENDENT, PRP, HSR, Dual HSR
	⇩	Port 1a Status: Disabled	Range: Disabled, Enabled, Active
	⇧	Port 4b Status: Disabled	Range: Disabled, Enabled, Active

These menus display when the product includes a Process Bus Module with order code 85, 86, or 87. The actual values display on the front panel and software. Additional values display in a web browser; enter the IP address of the relay and access the **Process Card Menu**.

Ports applicable to the Process Bus Module display. The example shows all eight ports.

The information also displays in a web browser under **Process Card Menu > Process Card Port Information**.

6.6.2 RxSV status

ACTUAL VALUES ⇨⇩ PB MODULE ⇨⇩ RxSV Status

■ RxSV Status ■	⇔	All RxSV Online: No	Range: Yes, No
	⇩	■ RxSV 1 ■	See below
	⇧	■ RxSV 8 ■	

ACTUAL VALUES ⇨⇩ PB MODULE ⇨⇩ RxSV Status ⇨ RxSV1(8)

■ RxSV 1 ■	⇔	SV 1 Status: Off	Range: Off, On, Not Configured
	⇩	SV 1 Sync Status: Local	Range: Local, Global, No Sync
	⇩	SV 1 Sim Flag: Off	Range: Off, On
	⇩	SV 1 Delay: 0 us	Range: us
	⇧	SV 1 Missed Frames: No	Range: Yes, No

⇕	**SV 1 Ch 1 Quality:** **0**	Range: 0000000000000
	⇩	
⇧	**SV 1 Ch16 Quality:** **0**	

Additional actual values for sampled values display in a web browser. Enter the IP address of the relay and access **Process Card Menu > Process Card Diagnostics**, for which the following fields are explained.

All SV diagnostics are volatile and are cleared when power is cycled.

Sample Value processing delay...Min Delay — The minimum time delay in received sample values. The accuracy threshold of this diagnostics is within 1/8 of a power system cycle.

Sample Value processing delay...Max Delay — The maximum time delay in received sample values. The accuracy threshold of this diagnostics is within 1/8 of a power system cycle.

Sample Value processing delay...Avg Delay — The average time delay for received sample values. A delay up to about 1.5 milliseconds (1500 µsec) is normal. The accuracy threshold of this diagnostics is within 1/8 of a power system cycle.

SV Delay Alarm Counter — The number of times that sampled values from a configured SV stream are delayed for more than the **Settings > Process Bus Module > General > SV Delay Alarm** setting. Counters wrap around when they reach 4294967295.

Sample Estimation Counter — The number of times that the relay used an internal estimation algorithm to substitute a missing sample value. Counters wrap around when they reach 4294967295.

Stream Status — The status of a configured SV stream. If the **Settings > Process Bus Module > SV Stream Config > SV Stream** setting is set to Disabled, this value is shown as Disabled. If the setting is set to IEC 61850-9-2LE or IEC 61869-9 and received sample values are accepted by the relay, this value is shown as Online. If received sample values are rejected, or sample values are lost (frames not received), stream status changes to Offline.

Latest Unacceptable Quality — Time stamp of the latest sample value with unacceptable quality, in any data item in a dataset. This time stamp has 1/8 of a power system cycle accuracy threshold.

Latest Sim Bit Change — The time stamp of latest change in simulation bit status of the received RxSV# messages. This time stamp has 1/8 of a power system cycle accuracy threshold.

SmpSync Latest Update Time — The time stamp of the latest sample value for which the SmpSync attribute was different from the previous samples. This value determines when the time source that sample value stream is synchronized to has changed. This time stamp has 1/8 of a power system cycle accuracy threshold.

SmpSync Changes in Past 24hrs — The number of times the SmpSync attribute in the sample value messages from this stream has changed in the past 24 hours. This counter is updated every hour. Counters wrap around when they reach 4294967295. The accuracy of this metric is 1.5 hours over a 24-hour period.

Sample Estimate Fail-Last 10s — The number of times that three or more out of five consecutive samples has been lost in the last 10 seconds. This counter is updated every second. Counters wrap around when they reach 4294967295.

Sample Value Trouble Counter — The number of times that the SV Stream Trouble minor self-test error is detected by the Process Bus Module. Counters wrap around when they reach 4294967295.

6.6.3 Clock synchronizing

ACTUAL VALUES ⇨⇩ PB MODULE ⇨⇩ TIME SYNC

■ **TIME SYNC** ■	⇔	**Sync Source:** **None**	Range: CPU Clock, SV Sync Stream, PBM Clock, None
	⇕	**Grandmaster ID:** **00000000000000000**	Range: any 8 octet value
	⇧	**Accuracy:** **0 ns**	Range: 0 to 999,999,999 ns

Additional actual values for time are available under **Actual Values > Status > Real Time Clock Synchronizing**.

Sync Source — This is the time synchronizing source that the UR Process Bus Module is using at present. It displays CPU Clock when the 1 pulse per second (PPS) signal from the main CPU drives the Process Bus Module clock. It displays None when the Process Bus Module clock free runs. It displays SV Sync Stream when the Process Bus Module clock is synchronized to the configured reference stream. It displays PBM Clock when the Process Bus Module clock is synchronized to a PTP grandmaster clock. The time synchronizing source itself is set using **SETTINGS ⇨ PRODUCT SETUP ⇨⇩ REAL TIME CLOCK** and **SETTINGS ⇨⇩ PROCESS BUS MODULE ⇨ PBM PTP ⇨ PTP FUNCTION**. If the latter is not set, then the **Sync Source** displays None even when the **REAL TIME CLOCK** setting is configured.

Grandmaster ID — This is the grandmaster clock (grandmasterIdentity) of the present PTP network if any. When the UR Process Bus Module is not using any PTP grandmaster, this actual value is set to the ID of that relay and the relay is acting as grandmaster in the network. The ID code is specified by PTP to be globally unique, so one can always know which clock is grandmaster in a system with multiple grandmaster-capable clocks.

Accuracy — This is the estimated time error based on the clockAccuracy information embedded in the received time signal. This actual value indicates the grandmaster clock accuracy. The clockAccuracy enumeration information received from the grandmaster is translated into nanoseconds as specified in the following table. The value 999,999,999 indicates that the magnitude of the estimated error is one second or more, or that the error cannot be estimated. The value 999,999,999 is used if the clockAccuracy received from grandmaster is in the ranges: 00 - 1F and 2F - FF. If the relay is the grandmaster, the actual value indicates the estimated accuracy of the local clock and the same information is embedded in the transmitted PTP messages. See defaultDS.clockQuality.clockAccuracy for more information.

Table 6-3: Clock accuracy

Value (hex)	Specification
00-1F	Reserved
20	The time is accurate to within 25 ns
21	The time is accurate to within 100 ns
22	The time is accurate to within 250 ns
23	The time is accurate to within 1 µs
24	The time is accurate to within 2.5 µs
25	The time is accurate to within 10 µs
26	The time is accurate to within 25 µs
27	The time is accurate to within 100 µs
28	The time is accurate to within 250 µs
29	The time is accurate to within 1 ms
2A	The time is accurate to within 2.5 ms
2B	The time is accurate to within 10 ms
2C	The time is accurate to within 25 ms
2D	The time is accurate to within 100 ms
2E	The time is accurate to within 250 ms
2F	The time is accurate to within 1 s
30	The time is accurate to within 10 s
31	The time is accurate to greater than 10 s
32-7F	Reserved
80-FD	For use by alternate PTP profiles
FE	Unknown
FF	Reserved

6.6.4 PRP

Actual values for the Parallel Redundancy Protocol (PRP) display in a web browser. Enter the IP address of the relay and access the **Process Card Menu > Process Card PRP Statistics**, which displays only when PRP is used.

PRP Status — PRP is Enabled if **Settings > Process Bus Module > General > Network Config** is set to PRP, else it is Disabled.

Total Rx Port A — Counter indicating the number of frames received on port A, for example port 1a.

Total Rx Port B — Counter indicating the number of frames received on port B, for example port 1b.

Total Tx Port A — Counter indicating the number of frames sent on port A, for example port 1a.

Total Tx Port B — Counter indicating the number of frames sent on port B, for example port 1b.

Mismatches Port A — Counter indicating the number of erroneous frames received on port A, for example port 1a.

Mismatches Port B — Counter indicating the number of erroneous frames received on port B, for example port 1b.

Duplicates Removed Port A — Number of PRP duplicate frames received from port A and discarded, for example port 1a.

Duplicates Removed Port B — Number of PRP duplicate frames received from port B and discarded, for example port 1b.

6.6.5 HSR

Actual values for High-Availability Seamless Redundancy (HSR) display in a web browser. Enter the IP address of the relay and access the **Process Card Menu > Process Card HSR Statistics**, which displays only when HSR is used.

HSR1 Status — Status of the first ring, either enabled or disabled. Enabled when redundancy is set to HSR or Dual-HSR.

HSR2 Status — Status of the second ring, either enabled or disabled. Enabled when redundancy is set to HSR or Dual-HSR.

Total Rx Port A — Counter indicating the number of frames received on port A, for example port 1a.

Total Rx Port B — Counter indicating the number of frames received on port B for example port 1b.

Total Tx Port A — Counter indicating the number of frames sent on port A, for example port 1a.

Total Tx Port B — Counter indicating the number of frames sent on port B, for example port 1b.

Duplicates Removed Port A — Number of HSR duplicate frames received from port A and discarded, for example port 1a.

Duplicates Removed Port B — Number of HSR duplicate frames received from port B and discarded, for example port 1b.

6.7 Records

6

6.7.1 User programmable fault reports

ACTUAL VALUES ⇨⇩ RECORDS ⇨⇩ USER PROGRAMMABLE FAULT REPORTS

```
■ USER PROGRAMMABLE      ⇔   NEWEST RECORD
■ FAULT REPORTS              NUMBER:        0

                         ⇕   LAST CLEARED DATE:
                             2019/07/26 14:23:57

                         ⇧   LAST REPORT DATE:
                             1970/01/01 00:00:00
```

This menu displays the user-programmable fault report actual values. See the User-Programmable Fault Report section in chapter 5 for information on this feature.

6.7.2 Event records

6.7.2.1 Enhanced and basic front panels

ACTUAL VALUES ⇨⇩ RECORDS ⇨ EVENT RECORDS

```
■ EVENT RECORDS          ⇔   EVENT: XXX
■                            XXX
                             ⇩
```

Date and time stamps

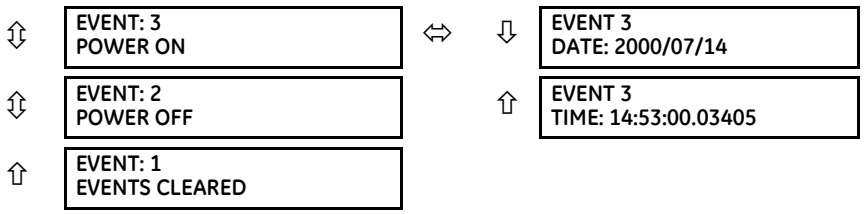

The event records menu shows the contextual data associated with up to the last 1024 events, listed in chronological order from most recent to oldest. When all 1024 event records have been filled, the oldest record is removed as a new record is added. Each event record shows the event identifier/sequence number, cause, and date/time stamp associated with the event trigger. See the **COMMANDS ⇨⇩ CLEAR RECORDS** menu for clearing event records.

Only major output operands generate events, not every operand. Elements that assert output per phase, for example, log operating phase output only without asserting the common three-phase operand event.

See also the system log (syslog) information in the previous chapter.

The event records are viewable in the software and in a web browser. The figure shows the event records in the software.

Figure 6-6: Event records viewed in EnerVista software

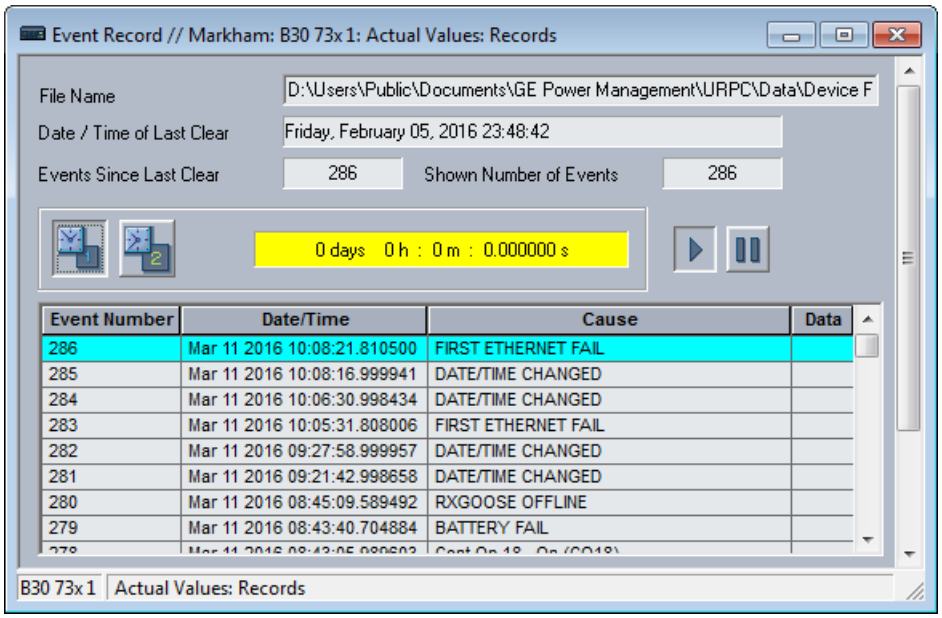

To view events in a web browser:

1. Enter the IP address of the device.

To download an oscillography waveform:

1. Click the **Oscillography** icon in the **Data** column (not shown in the figure).

6.7.2.2 Graphical front panel

To display the event records page, press the **Home** pushbutton then the **Event Record** Tab pushbutton.

The newest event is always at the top.

Up and Down pushbuttons move the event selector up and down. When the selector is at the bottom of the display, the Down pushbutton also scrolls the page, and similarly when the active selector is at the top of the display the Up pushbutton scroll the page.

A selected event is highlighted in yellow and becomes active by pressing the Up or Down pushbutton.

There are two event markers, one green, the other cyan. To mark some an event, use the Up and Down pushbuttons to select it (highlight in yellow), then press the green or cyan Mark Event Tab pushbutton. The mark color hides the selector until the selector is moved. A field at the top of the page shows the interval between the two marks.

Figure 6-7: Event record

\\Event Record 29-Jun-17 11:56:33 AM

Most recent event number	38	Time between marks	0d 0h : 0m : 35.012364s

Event ID	Date/Time	Cause
38	29-Jun-17 10:17:56.117582	WRONG TRANSCEIVER
37	29-Jun-17 10:17:56.117582	POWER ON
36	29-Jun-17 10:17:21.105218	POWER OFF
35	29-Jun-17 10:17:21.105218	REBOOT COMMAND
34	29-Jun-17 10:01:41.074062	FLASH PROGRAMMING
33	29-Jun-17 09:49:33.711569	RESET ANCTR OP(MNUL)
32	29-Jun-17 09:49:12.946980	RESET ANCTR OP(MNUL)
31	29-Jun-17 09:47:51.344902	RESET ANCTR OP(MNUL)
30	29-Jun-17 09:41:34.117044	WRONG TRANSCEIVER
29	29-Jun-17 09:41:34.117044	POWER ON

Mark Event | Mark Event | | Page Up | Page Down

6.7.3 Oscillography

6.7.3.1 Enhanced and basic front panels

ACTUAL VALUES ⇨⇩ RECORDS ⇨⇩ OSCILLOGRAPHY

■ **OSCILLOGRAPHY** ■	⇔	**FORCE TRIGGER?** **No**	Range: No, Yes
	⇩	**NUMBER OF TRIGGERS:** **0**	
	⇩	**AVAILABLE RECORDS:** **0**	
	⇩	**CYCLES PER RECORD:** **0**	
	⇧	**LAST CLEARED DATE:** **2019/07/14 15:40:16**	

This menu allows the user to view the number of triggers involved and number of oscillography traces available. The cycles per record value is calculated to account for the fixed amount of data storage for oscillography. See the Oscillography section of chapter 5 for details.

A trigger can be forced here at any time by setting "Yes" to the FORCE TRIGGER? command. See the **COMMANDS ⇨⇩ CLEAR RECORDS** menu for information on clearing the oscillography records.

To view a waveform:

2. Access **Actual Values > Records > Oscillography** in the EnerVista software.
3. In the window that opens, select the record number. The highest number is the most recent record (Newest Record Number).
4. Click the **Read** button to get the waveform. When available, waveforms are displayed graphically, and otherwise error messages display.
5. In the waveform window that opens, you can save the file, for example with the CFG extension.

6.7.4 Data logger

ACTUAL VALUES ⇨⇩ RECORDS ⇨⇩ DATA LOGGER

■ DATA LOGGER ■	⇔	OLDEST SAMPLE TIME: 2019/01/14 13:45:51
	⇧	NEWEST SAMPLE TIME: 2019/01/14 15:21:19

The **OLDEST SAMPLE TIME** represents the time at which the oldest available samples were taken. It is static until the log gets full, at which time it starts counting at the defined sampling rate.

The **NEWEST SAMPLE TIME** represents the time the most recent samples were taken. It counts up at the defined sampling rate. If the data logger channels are defined, then both values are static.

See the **COMMANDS ⇨⇩ CLEAR RECORDS** menu for clearing data logger records.

6.7.5 Breaker maintenance

ACTUAL VALUES ⇨⇩ RECORDS ⇨⇩ MAINTENANCE ⇨ BREAKER 1(3)

■ BREAKER 1 ■	⇔	BKR 1 ACC ARCING AMP ϕA: 0.00 kA2-cyc
	⇩	BKR 1 ACC ARCING AMP ϕB: 0.00 kA2-cyc
	⇩	BKR 1 ACC ARCING AMP ϕC: 0.00 kA2-cyc
	⇩	BKR 1 OPERATING TIME ϕA: 0 ms
	⇩	BKR 1 OPERATING TIME ϕB: 0 ms
	⇩	BKR 1 OPERATING TIME ϕC: 0 ms
	⇩	BKR 1 OPERATING TIME: 0 ms
	⇩	BKR 1 ARCING AMP ϕA: 0.00 kA2-cyc
	⇩	BKR 1 ARCING AMP ϕB: 0.00 kA2-cyc
	⇩	BKR 1 ARCING AMP ϕC: 0.00 kA2-cyc
	⇩	BKR 1 AMP MAX ϕA: 0.00 kA
	⇩	BKR 1 AMP MAX ϕB: 0.00 kA
	⇧	BKR 1 AMP MAX ϕC: 0.00 kA

There is an identical menu for each of the breakers.

The **BKR 1 ACC ARCING AMP** values are in units of kA^2-cycles. See the **COMMANDS ⇨⇩ CLEAR RECORDS** menu for clearing breaker arcing current records.

The **BREAKER OPERATING TIME** is defined as the slowest operating time of breaker poles that were initiated to open.

All of the values are stored in non-volatile memory and retained with power cycling.

6.8 Product information

6.8.1 Model information

ACTUAL VALUES ⇨⇩ PRODUCT INFO ⇨ MODEL INFORMATION

■ MODEL INFORMATION ■	⇔	ORDER CODE LINE 1: C70-A00-AAA-A0A-A0A-	Range: standard GE order code format
	⇩	ORDER CODE LINE 2: A0A-A0A-A0A	Range: up to 20 alphanumeric characters
	⇩	ORDER CODE LINE 3:	Range: up to 20 alphanumeric characters
	⇩	ORDER CODE LINE 4:	Range: up to 20 alphanumeric characters
	⇩	SERIAL NUMBER:	Range: standard GE serial number format
	⇩	ETHERNET MAC ADDRESS 000000000000	Range: standard Ethernet MAC address format
	⇩	MANUFACTURING DATE:	Range: YYYY/MM/DD HH:MM:SS
	⇩	OPERATING TIME: 0:00:00	Range: HH:MM:SS
	⇩	PMU FEATURE ACTIVE: No	Range: Yes, No
	⇩	CT/ VT ADVANCED DIAG ACTIVE: No	Range: Yes, No
	⇩	LAST SETTING CHANGE: 2019/01/01 23:11:19	Range: YYYY/MM/DD HH:MM:SS
	⇧	PBM MAC ADDRESS: 664422113344	Range: YYYY/MM/DD HH:MM:SS

The order code, serial number, Ethernet MAC address, date and time of manufacture, and operating time are shown here. The rear panel on the device contains similar information. The information is read-only in the software and modifiable on the front panel. For example, the order code can be corrected using the front panel.

ETHERNET MAC ADDRESS — UR devices with firmware 7.0x and above have three Ethernet ports that can be used on three networks. The MAC address displays for port 1. The MAC address for port 2 is one higher. The MAC address for port 3 is one higher than port 2. In redundant mode, the MAC addresses for ports 2 and 3 are the same as port 2.

PBM MAC ADDRESS — The MAC address for the Process Bus Module.

6.8.2 Firmware revisions

6.8.2.1 Enhanced and basic front panels

ACTUAL VALUES ⇨⇩ PRODUCT INFO ⇨ FIRMWARE REVISIONS

■ FIRMWARE REVISIONS ■	⇔	C70 REVISION: 7.9x	Range: 0.00 to 655.35 Revision number of the application firmware.
	⇩	MODIFICATION FILE NUMBER: 0	Range: 0 to 65535 (ID of the MOD FILE) Value is 0 for each standard firmware release.

⇕	**BOOT PROGRAM REVISION: 7.02**	Range: 0.00 to 655.35 Revision number of the boot program firmware.
⇕	**FRONT PANEL PROGRAM REVISION: 2.01**	Range: 0.00 to 655.35 Revision number of front panel program firmware.
⇕	**COMPILE DATE: 2019/09/15 04:55:16**	Range: YYYY/MM/DD HH:MM:SS Date and time when product firmware was built.
⇕	**BOOT DATE: 2017/09/15 16:41:32**	Range: YYYY/MM/DD HH:MM:SS Date and time when the boot program was built.
⇕	**PROCESS BUS BOOT REVISION: 0.00**	Range: 0.00 to 655.35
⇕	**PB BOOT DATE: 2018/09/15 04:55:16**	Range: YYYY/MM/DD HH:MM:SS
⇕	**PROCESS BUS REVISION: 7.9x**	Range: 0.00 to 655.35
⇕	**PROCESS BUS DATE: 2018/09/15 04:55:16**	Range: YYYY/MM/DD HH:MM:SS
⇕	**PB CVSOC FPGA REVISION: 0.00**	Range: 0.00 to 655.35
⇕	**PB CVFPGA FPGA REVISION: 0.00**	Range: 0.00 to 655.35
⇕	**PB CVFPGA SIGN: 33272**	Range:
⇕	**FPGA PROGRAM REVISION: 02.02**	Range: 0.00 to 655.35 Revision number for FPGA.
⇧	**FPGA DATE: 2016/09/15 16:41:32**	Range: YYYY/MM/DD HH:MM:SS Date and time when the FPGA was built.

The shown data is illustrative only. A modification file number of 0 indicates that, currently, no modifications have been installed. PB and process bus refer to the Process Bus Module.

6.8.2.2 Graphical front panel

With a graphical front panel (GFP), the following additional items display in the software.

⇕	**GFP PROGRAM REVISION: 7.80**	Range: 0.00 to 655.35
⇕	**GFP COMPILE DATE: 2018/09/15 04:55:16**	Range: YYYY/MM/DD HH:MM:SS
⇕	**GFP BOOT PROGRAM REVISION: 655.35**	Range: 0.00 to 655.35
⇕	**GFP BOOT COMP. DATE: 2016/09/15 04:55:16**	Range: YYYY/MM/DD HH:MM:SS

C70 Capacitor Bank Protection and Control System

Chapter 7: Commands and targets

This chapter outlines the Commands and Targets menus and self-tests/error messages. Commands related to the IEC 61850 protocol are outlined in the IEC 61850 section of the Settings chapter. Log/error messages for IEC 61850 are outlined in the UR Family Communications Guide.

7.1 Commands menu

```
  COMMANDS
  ⇩
⇩ ■■ COMMANDS
  ■■ VIRTUAL INPUTS
⇕ ■■ COMMANDS
  ■■ CLEAR RECORDS
⇕ ■■ COMMANDS
  ■■ SET DATE AND TIME
⇕ ■■ COMMANDS
  ■■ RELAY MAINTENANCE
⇕ ■■ CAPACITOR BANK
  ■■ AUTO-SETTING
⇧ ■■ COMMANDS
  ■■ SECURITY
```

The commands menu contains relay directives intended for operations personnel. All commands can be protected from unauthorized access via the command password; see the Security section of chapter 5 for details. The following flash message appears after successfully command entry.

```
COMMAND
EXECUTED
```

7.1.1 Virtual inputs

COMMANDS ⇨ VIRTUAL INPUTS

■■ COMMANDS ■■ VIRTUAL INPUTS	⇔	Virt Ip 1 Off	Range: Off, On
	⇕	Virt Ip 2 Off	Range: Off, On
	⇩		
	⇧	Virt Ip 128 Off	Range: Off, On

The states of up to 128 virtual inputs are changed here. The first line of the display indicates the ID of the virtual input. The second line indicates the current or selected status of the virtual input. This status is a state off (logic 0) or on (logic 1).

7.1.2 Clear records

COMMANDS ⇨ CLEAR RECORDS

■■ COMMANDS ■■ CLEAR RECORDS	⇔	CLEAR USER FAULT REPORTS? No	Range: No, Yes
	⇕	CLEAR EVENT RECORDS? No	Range: No, Yes
	⇕	CLEAR OSCILLOGRAPHY? No	Range: No, Yes
	⇕	CLEAR DATA LOGGER? No	Range: No, Yes
	⇕	CLEAR UNAUTHORIZED ACCESS? No	Range: No, Yes
	⇕	CLEAR DIRECT I/O COUNTERS? No	Range: No, Yes. Valid only for units with Direct Input/Output module.
	⇕	CLEAR TELEPROTECT COUNTERS? No	Range: No, Yes
	⇕	■ CLEAR IEC61850 ■ XWSI OPCNT	See below
	⇕	■ CLEAR IEC61850 ■ XCBR OPCNT	See below
	⇕	CLEAR SV DIAGNOSTICS? No	Range: No, Yes
	⇧	CLEAR ALL RELAY RECORDS? No	Range: No, Yes

This menu contains commands for clearing historical data such as the event records. Data is cleared by changing a command setting to "Yes" and pressing the **ENTER** key. After clearing data, the command setting automatically reverts to "No."

CLEAR PBM DIAGNOSTICS — Clears the sampled value diagnostics information for a non-HardFiber Process Bus Module. All other Process Bus Module diagnostics information is reset up relay power cycling, such as HSR and PTP.

COMMANDS ⇨ CLEAR RECORDS ⇨⇩ CLEAR IEC61850 XWSI OPCNT

■ CLEAR IEC61850 ■ XWSI OPCNT	⇔	CLEAR XSWI 1 OpCnt? No	Range: No, Yes
		⇩	

7

⇧	CLEAR XSWI 24 OpCnt? No	Range: No, Yes

COMMANDS ⇨ CLEAR RECORDS ⇨⇩ CLEAR IEC61850 XCBR OPCNT

■ CLEAR IEC61850 ■ XCBR OPCNT	⇔	CLEAR XCBR 1 OpCnt? No	Range: No, Yes
		⇩	
	⇧	CLEAR XCBR 8 OpCnt? No	Range: No, Yes

The Clear XSWI commands clear the disconnect operation counters for each phase and the three-phase counter. Similarly, the Clear XCBR commands clear the circuit breaker operation counters for each phase and the three-phase counter.

7.1.3 Set date and time

COMMANDS ⇨⇩ SET DATE AND TIME

■■ COMMANDS ■■ SET DATE AND TIME	⇔	SET DATE AND TIME: 2000/01/14 13:47:03	Range: YYYY/MM/DD HH:MM:SS

The date and time can be entered on the front panel keypad. The time setting is based on the 24-hour clock. The complete date, as a minimum, must be entered to allow execution of this command. The new time and date take effect when the **ENTER** key is pressed.

The clock also can be synchronized to the local computer time among several UR devices. Use the **Synchronize Devices** entry in the Online Window area of the EnerVista software. (Click the button at the top of the window that opens.)

When the relay is synchronizing to an external time source such as PTP, IRIG-B, or SNTP, the manually entered time or the manually synchronized time is over-written.

The timescale of the entered time is local time, including daylight savings time where and when applicable.

7.1.4 Relay maintenance

COMMANDS ⇨⇩ RELAY MAINTENANCE

■■ COMMANDS ■■ RELAY MAINTENANCE	⇔	PERFORM LAMP TEST? No	Range: No, Yes
	⇩	PERFORM LCD TEST? Off	Range: Off, Red, Green, Blue, White & Text Pattern, Black & Text Pattern, TV Test Pattern
	⇩	PERFORM PUSHBUTTON TEST? No	Range: No, Yes
	⇩	UPDATE ORDER CODE? No	Range: No, Yes
	⇩	REBOOT RELAY? No	Range: No, Yes
	⇩	SERVICE COMMAND 0	Range: 0, 101, 20511
	⇧	SAVE VOLATILE DATA? No	Range: No, Yes

This menu contains commands for relay maintenance purposes. Commands for the lamp test and order code are activated by changing a command setting to "Yes" and pressing the **ENTER** key. The command setting then automatically reverts to "No." The service command is activated by entering a numerical code and pressing the **ENTER** key.

Not all commands display in the software; use the front panel when required.

PERFORM LAMP TEST — Turns on all front panel LEDs and display pixels for a short duration.

PERFORM LCD TEST — This command detects either stuck-ON or stuck-OFF pixels (dead pixels) in the display screen on the graphical front panel. RED/GREEN/BLUE is to display the solid background color in the whole screen. WHITE & TEXT PATTERN shows the white background and black texts. BLACK & TEXT PATTERN shows the black background and white texts. TV TEST PATTERN displays a standard television test pattern (SMPTE color bars). The test screen can be canceled by pressing any pushbutton or after 30 seconds of inactivity.

PERFORM PUSHBUTTON TEST — This command tests the pushbuttons on the graphical front panel. During testing, press the corresponding pushbutton according to the prompt text. A failure message is given if the expected action is not detected in one minute. Holding the **ESCAPE** button for five seconds to interrupt the test sequence. The designated function of a specific pushbutton is bypassed in the test.

UPDATE ORDER CODE — Use this command to read and update the order code, for example when hardware modules have been changed inside the relay. It causes the relay to scan the backplane for the modules and update the order code to match. All settings are defaulted with an update. When an update occurs, the following message displays and the relay restarts.

```
UPDATING...
PLEASE WAIT
```

There is no impact if there have been no changes to the hardware modules. When an update does not occur, the ORDER CODE NOT UPDATED message displays.

REBOOT RELAY — Restarts the relay so that changes to configuration settings can take effect. In most cases, if changes are made to the configuration settings these changes do not take effect unless the relay is rebooted.

NOTE

With the CyberSentry option, the Administrator and Operator roles can initiate the Reboot Relay command.

SERVICE COMMAND — Performs specific C70 service actions. Presently, there are two service actions available. Code "20511" returns all settings to their factory default value and restarts the relay (then you re-enter IP address, restart, set unit to "Programmed"). Code “101” is used to clear factory diagnostic information stored in the non-volatile memory. If a code other than these two is entered, the command is ignored and no action is taken. Various self-checking diagnostics are performed in the background while the C70 is running, and diagnostic information is stored on the non-volatile memory from time to time based on the self-checking result. Although the diagnostic information is cleared before the C70 is shipped from the factory, the user can want to clear the diagnostic information for themselves under certain circumstances. For example, you clear diagnostic information after replacement of hardware. Once the diagnostic information is cleared, all self-checking variables are reset to their initial state and diagnostics restart from scratch.

SAVE VOLATILE DATA — Saves this data to compact flash memory prior to shutdown. This allows the saved data to be as recent as possible instead of relying on the periodic timer to save the data.

7.1.5 Capacitor bank automatic setting

7.1.5.1 Menu

■■ CAPACITOR BANK ■■ AUTO-SETTING	⇔	■ VOLTAGE ■ DIFFERENTIAL	See below
	⇩	■ NEUTRAL VOLTAGE ■ UNBALANCE	See page 7-6
	⇧	■ PHASE CURRENT ■ UNBALANCE	See page 7-7
	⇩	■ NEUTRAL CURRENT ■ UNBALANCE	See page 7-8

The relay provides for automatic calculations of proper balancing (matching) factors of the sensitive capacitor bank protection functions. The following screens display the suggested values of the balancing factors and prompt the user to apply them. If applied from this command level, a given value is placed into the setting file and applied instantaneously in all setting groups of the relay with the same source as the active group during the auto-setting procedure.

7.1.5.2 Voltage differential

COMMANDS ⇨ CAPACITOR BANK AUTO SETTING ⇨ VOLTAGE DIFFERENTIAL ⇨ VOLTAGE DIFFERENITAL 1(3)

■ VOLTAGE ■ DIFFERENTIAL 1	⇔	VOLTAGE DIF 1 AUTO SETTING: Disabled	Range: Disabled, Manual, Auto
	⇩	V DIF 1A k=####.#### APPLY IN PHS A? No	Range: Yes, No
	⇩	V DIF 1A k=####.#### APPLY IN PHS B? No	Range: Yes, No
	⇧	V DIF 1A k=####.#### APPLY IN PHS C? No	Range: Yes, No

Use the automatic setting feature when the capacitor bank is online and the 87V function is enabled. For security reasons, consider applying less sensitive settings during the auto-setting process. Switching temporarily to a different setting group with less sensitive pickup thresholds is a way to provide the extra security.

The feature can be used with a manual acceptance of the auto-calculated coefficients (the **VOLTAGE DIF 1 AUTO SETTING** command switched to "Manual"), or with an automatic acceptance of the calculated factors (the **VOLTAGE DIF 1 AUTO SETTING** command switched to "Auto").

The feature is used as follows.

Application with manual supervision of the automatically calculated factors

When the **VOLTAGE DIF 1 AUTO SETTING** command is switched to "Manual", the auto-setting screens, one for each phase, display the values that balance best the function in a given phase and prompt for permission to apply the calculated value as a new setting. When confirmed, the auto-selected value gets applied to all setting groups configured with the same source as the active group during the auto-setting procedure.

After consent to apply the calculated coefficient is received, the "k =?.???? APPLIED" confirmation message displays for the duration of the flash message time in the second line of the screen. The time-out period is provided for the field staff to make a note of the newly applied coefficient. However, it is possible to navigate from this screen immediately. The new setting values can be viewed under the setting menu at any time.

After the process finishes, it is recommended to disable the auto-setting feature. If not disabled by the user, the feature disables itself when user-initiated front panel interface activity ceases and the C70 display dims itself.

Certain security conditions are checked during the auto-setting process. This includes deviation from the nominal frequency and verifying that the magnitudes of all three bus voltages are between 0.85 and 1.15 pu. If these conditions are violated. the SUPV FAIL message displays in the second line.

If the voltage differential function is disabled or blocked, then the auto-setting process is not functional and the 87V NOT RUNNING message displays in the second line.

Application with automatic supervision of the automatically calculated factors

When the **VOLTAGE DIF 1 AUTO SETTING** command is switched to "Auto," the process of calculating and applying the balancing coefficients is fully automatic. Typical applications require setting this function to "Auto" with the bank de-energized, then energizing the capacitor bank. When the bank is energized and the five-cycle timer of the 87V function expires, the balancing coefficients are calculated and automatically applied. After the new balancing factors are applied, the function switches automatically from "Auto" to "Disabled" and 87V becomes operational. In essence, when in the "Auto" mode, the user confirmation is processed immediately after the balancing values become available. The C70 does not display the applied coefficients in "Auto" mode; rather, they are be viewed in the **SETTINGS** menu.

If the supervisory conditions are not satisfied in the "Auto" mode within the time specified by the **DEFAULT MESSAGE TIMEOUT** setting, the AUTO FAIL message displays and the 87V function starts running with the pre-existing settings for the balancing factors.

The advantage of automatically calculating factors is that the bank is immediately protected after energization. However, due to energization inrush and distortion of voltages, the factors may not be accurate enough for the most sensitive stages. Therefore, it is good practice to block the most sensitive stages on energization, manually adjust the factors to reduce the differential signal, and then enable the most sensitive stages.

7.1.5.3 Neutral voltage unbalance

COMMANDS ⇨ CAPACITOR BANK AUTO SETTING ⇨ NEUTRAL VOLTAGE UNBALANCE ⇨ NEUTRAL VOLTAGE UNBALANCE 1(3)

■ NEUTRAL VOLTAGE ■ UNBALANCE 1	⇔	NTRL VOL UNBAL 1 AUTO SET: Disabled	Range: Disabled, Manual, Auto
	⇩	XA/XB RATIO k=0.0000 APPLY? No	Range: Yes, No
	⇧	XA/XC RATIO k=0.0000 APPLY? No	Range: Yes, No

Use the auto-setting feature when the capacitor bank is online and the 59NU function is enabled. For security reasons, consider applying less sensitive settings during the auto-setting process. Switching temporarily to a different setting group with less sensitive pickup thresholds is a method to provide the extra security.

This feature can be used with a manual acceptance of the auto-calculated coefficients (the **NTRL VOL UNBAL 1 AUTO SET** command switched to "Manual"), or with an automatic acceptance of the calculated factors (the **NTRL VOL UNBAL 1 AUTO SET** command switched to "Auto").

The feature is used as follows.

Manual supervision of automatically calculated factors

When the **NTRL VOL UNBAL 1 AUTO SET** command is switched to "Manual," the auto-setting screens (one for each of the two factors) display values that best balance the function and prompt for permission to apply the calculated value as a new setting. When confirmed, the auto-selected value is applied to all setting groups having same source as the active group during auto-setting procedure. Both ratios (XA / XB and XA / XC) must be set correctly to clear the inherent bank unbalance. After consent to apply the calculated coefficient is received via the keypad, the "k =?.???? APPLIED" confirmation message idisplays for the duration of the flash message time. The time-out period is intended for field staff to make note of the newly applied coefficient. However, it is possible to immediately navigate from this screen. The new setting values can be viewed in the **SETTINGS** menu at any time.

After the process finishes, it is recommended to disable the auto-setting feature. If not manually disabled, the feature automatically disables itself when user-initiated front panel interface activity ceases and the C70 display is dimmed.

Certain security conditions are checked during the auto-setting process, such as the frequency deviation from the nominal frequency and the magnitude of the positive-sequence current above 0.1 pu. If any of these conditions are violated, the SUPV FAIL message displays in the second line.

If the neutral voltage unbalance function is disabled or blocked, the auto-setting process is not functional and the 59NU NOT RUNNING message displays in the second line.

Automatic supervision of automatically calculated factors

When the **NTRL VOL UNBAL 1 AUTO SET** command is switched to "Auto", the process of calculating and applying the balancing coefficients is fully automatic. Typical applications require setting this function to "Auto" with the bank de-energized, then energizing the capacitor bank. After the function is set to "Auto," it expects to read valid input signals as a result of bank energization within the display flash message time duration to calculate and apply factors; otherwise, the function is returned to "Disabled." When the bank is energized and the five-cycle timer of the 59NU function expires, the balancing coefficients are calculated and automatically applied. When the new balancing factors are applied, the function switches automatically from "Auto" to "Disabled" and the 59NU function becomes operational. In essence, when in the "Auto" mode, the confirmation command executes automatically immediately after the balancing values are available. The C70 does not display the applied coefficients in the "Auto" mode; rather, they are be viewed in the **SETTINGS** menu.

When the supervisory conditions are not satisfied in "Auto" mode, the AUTO FAIL message displays and the 59NU function starts running with the pre-existing settings for the balancing factors.

7.1.5.4 Phase current unbalance

COMMANDS ⇨ CAPACITOR BANK AUTO SETTING ⇨ PHASE CURRENT UNBALANCE ⇨ PHASE CURRENT UNBALANCE 1(3)

■ PHASE CURRENT ■ UNBALANCE 1	⇔	CUR UNBALACE 1 AUTO SETTING: Disabled	Range: Disabled, Manual, Auto
	⇕	CUR UNB 1A k=0.0000 APPLY IN PHS A? No	Range: Yes, No
	⇕	CUR UNB 1A k=0.0000 APPLY IN PHS B? No	Range: Yes, No
	⇑	CUR UNB 1A k=0.0000 APPLY IN PHS C? No	Range: Yes, No

Use the auto-setting feature when the capacitor bank is online and the 60P function is enabled. For security reasons, apply less sensitive settings during the auto-setting process. Switching temporarily to an alternate setting group with less sensitive pickup thresholds is a method to provide the extra security.

The feature can be used with by manual accepting the auto-calculated coefficients (the **CUR UNBALACE 1 AUTO SETTING** command switched to "Manual") or by automatic acceptance of the calculated factors (the **CUR UNBALACE 1 AUTO SETTING** command switched to "Auto").

The feature is used as follows.

Application with manual supervision of the automatically calculated factors

When the **CUR UNBALACE 1 AUTO SETTING** command is switched to "Manual," the auto-setting screens (one for each phase) display values that best balance the function in a given phase and prompt for permission to apply the calculated value as a new setting. When confirmed, the auto-selected value is applied to all setting groups having same source as active group during the auto-setting procedure. The balancing factors can be either positive or negative, depending on which of the two banks has a lower impedance, and on the polarity of the differential CTs connected to the relay.

After user consent to apply the calculated coefficient is received, the "k =?.???? APPLIED" confirmation message displays for the duration of the flash message time. The timeout period allows field staff to make note of the newly applied coefficient. However, it is possible to immediately navigate from this screen. The new setting values can be viewed in the **SETTINGS** menu at any time.

After the process finishes, it is recommended to disable the auto-setting feature. If not disabled, the feature automatically disables itself when user-initiated front panel interface activity ceases and the C70 display is dimmed.

Certain security conditions are checked during the auto-setting process, such as frequency deviation from the nominal and the magnitude of the phase currents above 0.1 pu. If any of these conditions are violated, the SUPV FAIL message displays in the second line.

If the phase unbalance function is disabled or blocked, the auto-setting process is not functional and the 60P NOT RUNNING message displays in the second line.

Application with automatic supervision of the automatically calculated factors

When the **CUR UNBALACE 1 AUTO SETTING** command is switched to "Manual," the process of calculating and applying the balancing coefficients is fully automatic. Typical applications require setting this function to "Auto" with the bank de-energized, then subsequently energizing the capacitor bank. If the function is set to "Auto," it expects to read valid input signals as a result of bank energization within the flash message duration time to calculate and apply factors. Otherwise, the value is switched backed to "Disabled." When the bank is energized and the five-cycle timer of the 60P function expires, the balancing coefficients are calculated and automatically applied. After the new balancing factors are applied, the auto-setting function switches "Auto" to "Disabled" and the 60P element becomes operational. When in "Auto" mode, the automatic confirmation command executes immediately after the balancing values are available. The C70 does not display the applied coefficients in "Auto" mode; rather, they can be viewed in the **SETTINGS** menu.

If the supervisory conditions are not satisfied in the "Auto" mode within time defined by the **DEFAULT MESSAGE TIMEOUT** setting, the AUTO FAIL message displays and the 60P function starts running with the pre-existing settings for the balancing factors.

7.1.5.5 Neutral current unbalance

COMMANDS ⇨ CAPACITOR BANK AUTO SETTING ⇨ NEUTRAL CURRENT UNBALANCE ⇨ NEUTRAL CURRENT UNBALANCE 1(3)

■ NEUTRAL CURRENT ■ UNBALANCE 1	⇔	NTRL CUR UNBALANCE 1 AUTO-SET: Disabled	Range: Disabled, Manual, Auto
	⇩	NTRL CUR 1 k=0.0000 APPLY MAGNITUDE? No	Range: Yes, No
	⇧	NTRL CUR 1 k=0° APPLY ANGLE? No	Range: Yes, No

Use the auto-setting feature when the capacitor bank is online and the 60N function is enabled. For security reasons, apply less sensitive settings during the auto-setting process. Temporarily switching to an alternate setting group with less sensitive pickup thresholds is a method of providing the extra security.

The feature can be used with manual acceptance of the auto-calculated coefficients (the **NTRL CUR UNBALANCE 1 AUTO-SET** command switched to "Manual"), or with automatic acceptance of the calculated factors (the **NTRL CUR UNBALANCE 1 AUTO-SET** command switched to "Auto").

The feature is used as follows.

Application with manual supervision of the automatically calculated factors

When the **NTRL CUR UNBALANCE 1 AUTO-SET** command is switched to "Manual," the auto-setting screens (one for magnitude and one for angle of the compensating factor) display the values that best balance the function and prompt for permission to apply the calculated value as a new setting. When confirmed, the auto-selected value is applied to all setting groups.

After user consent to apply the calculated coefficient is received, the "k =?.???? APPLIED" confirmation message displays for the duration of the flash message time. The timeout period allows field staff to make note of the newly applied coefficient. However, it is possible to immediately navigate from this screen. The new setting values can be viewed in the **SETTINGS** menu at any time.

After the process finishes, it is recommended to disable the auto-setting feature. If not disabled by the user, the feature is automatically disabled when user-initiated front panel interface activity ceases and the C70 display is dimmed.

Certain security conditions are checked during the auto-setting process. If these conditions are violated, the SUPV FAIL message displays in the second line.

If the neutral voltage unbalance function is disabled or blocked, the auto-setting process is not functional and the 60N NOT RUNNING message displays in the second line.

Application with automatic supervision of the automatically calculated factors

When the **NTRL CUR UNBALANCE 1 AUTO-SET** command is switched to "Auto," the process of calculating and applying the balancing coefficients is fully automatic. Typical applications require setting this function to "Auto" with the bank de-energized, then subsequently energizing the capacitor bank. After the function is set to "Auto," it expects to read valid input signals as a result of bank energization within the display flash message time duration to calculate and apply factors. Otherwise, the function is switched backed to "Disabled." When the bank is energized and the five-cycle timer of the 60N function expires, the balancing coefficients are calculated and automatically applied. After the new balancing factors are applied, the auto-setting function switches automatically from "Auto" to "Disabled," and the 60N element becomes operational. In essence, when in "Auto" mode, the confirmation command executes automatically immediately after the balancing values become available. The C70 does not display the applied coefficients in the "Auto" mode; instead, they can be viewed in the **SETTINGS** menu.

If the supervisory conditions are not satisfied in the "Auto" mode within time defined by the **DEFAULT MESSAGE TIMEOUT** setting, the AUTO FAIL message displays and the 60N function starts running with the pre-existing settings for the balancing factors.

7.1.6 Security

COMMANDS ⇨⇩ SECURITY

■■ SECURITY ■■	⇔	ADMINISTRATOR LOGOFF: No	Range: Yes, No
	⇩	ENGINEER LOGOFF: No	Range: Yes, No
	⇩	OPERATOR LOGOFF: No	Range: Yes, No
	⇧	CLEAR SECURITY DATA: No	Range: Yes, No

With the CyberSentry option, this setting is available to enable or disable the following commands.

ADMINISTRATOR LOGOFF — Selecting 'Yes' allows the Supervisor to forcefully logoff an administrator session.

ENGINEER LOGOFF — Selecting 'Yes' allows the Supervisor to forcefully logoff an engineer session.

OPERATOR LOGOFF — Selecting 'Yes' allows the Supervisor to forcefully logoff an operator session.

CLEAR SECURITY DATA — Selecting 'Yes' allows the Supervisor to forcefully clear all the security logs and clears all the operands associated with the self-tests.

7

7.2 Targets menu

	TARGETS	
	⇩	
⇩	PHASE TOC4 OP: A B -	Displayed only if targets for this element are active. Example shown.
⇩	DIGITAL ELEMENT 48: LATCHED	Displayed only if targets for this element are active. Example shown.
	⇩	
⇧		

A target enables the EnerVista UR Setup software to monitor automatically and display the status of any active target messages of all the devices inserted into that site.

Each C70 element with a TARGET setting has a target message that when activated by its element is displayed in sequence with any other currently active target messages in the **TARGETS** menu. In the example shown, the Phase TOC4 and Digital Element 48 target settings are active and so have their targets displayed. The down arrow below the two elements indicates that there can be other active elements beyond these two.

For more information, see the description of target messages in the next section, and the Introduction to Elements section in the Settings chapter for instructions on TARGET setting.

When no targets are active, the display reads **NO ACTIVE TARGETS**.

7.2.1 Target messages

When there are no active targets, the first target to become active causes the display to immediately default to that message. If there are active targets and the user is navigating through other messages, and when the default message timer times out (i.e. the keypad has not been used for a determined period of time), the display again defaults back to the target message.

The range of variables for the target messages is described below. Phase information is included if applicable. If a target message status changes, the status with the highest priority displays.

Table 7-1: Target message priority status

Priority	Active status	Description
1	OP	element operated and still picked up
2	PKP	element picked up and timed out
3	LATCHED	element had operated but has dropped out

If a self test error is detected, a message appears indicating the cause of the error. For example UNIT NOT PROGRAMMED indicates that the minimal relay settings have not been programmed.

7.2.2 Relay self-tests

7.2.2.1 Description

The relay performs a number of self-test diagnostic checks to ensure device integrity. The two types of self-tests (major and minor) are listed in the following tables. When either type of error occurs, the Trouble LED Indicator turns on and a target message displays. All errors record an event in the event recorder. Latched errors can be cleared by pressing the **RESET** key, providing the condition is no longer present.

Major self-test errors also result in the following:

- The critical fail relay on the power supply module de-energizes
- All other output relays de-energize and are prevented from further operation
- The front panel In Service LED indicator turns off
- A RELAY OUT OF SERVICE event is recorded

To view error messages in EnerVista software:

1. Access **Actual Values > Records > Event Records**.

Messages display on the front panel with one or two lines of text. An example is as follows. In the tables that follow, messages are grouped using the first line of text. For example, MAINTENANCE ALERT, then a row for 4L Discrepancy, then a row for Bad IRIG-B Signal.

MAINTENANCE ALERT:
4L Discrepancy

MAINTENANCE ALERT: **Bad IRIG-B Signal**

7.2.2.2 Major self-test error messages

The major self-test errors are outlined in this section.

Table 7-2: Major self-test errors

Error	Latched?	Description	Test frequency	Action
DIAGNOSTIC FAILURE ___: Self Test Error	No	Internal recovery failure detected	Upon recovery	Extract a Service Report through UR Setup software. Contact technical support and supply details of the failure code on the display.
EQUIPMENT MISMATCH: *2nd line detail*	No	The number or type of installed hardware modules does not match the order code stored in the C70. An example is when a basic front panel is installed and the order code on the C70 expects a graphical front panel. As another example, "Card F8L Missing" means that hardware module 8L is missing from slot F inside the UR device.	On power up. Afterwards, the backplane is checked for missing cards every five seconds	Check all modules against the order code, ensure they are inserted properly, and cycle control power. If a module has intentionally been added or removed, refresh the order code under **Device Setup**. If the problem persists, contact the factory.
FLEXLOGIC ERROR: *2nd line detail*	No	A FlexLogic equation is incorrect	Event driven, performed whenever FlexLogic equations are modified	Finish all equation editing and use self tests to debug any errors.
RAM FILESYSTEM FAIL: Self-Test Error	Yes	The relay failed to create the RAM file system	On relay startup	Contact factory service
SYSTEM FAILURE ___: *2nd line detail*	Yes	Relay system failure detected	Continuous	Extract a Service Report through UR Setup software. Contact technical support and supply details of the failure code on the display.
SYSTEM FAILURE: Card F8L	Yes	This is an indication that the DSP module has failed. The slot and DSP type are indicated in the message.		The recommendation is to replace this DSP. Extract a Service Report through UR Setup software and provide it to GE customer service.
TO INSTALL SETTINGS: CHECK LOG AND REBOOT	Yes	Certain settings require a reboot to be applied, for example DNP settings, IEC 104 settings. After a CID file was send to the relay, a manual reboot of the relay is required to apply those settings that require a reboot	A new CID is sent and it includes changes in settings that require a reboot to be applied	Restart relay

Error	Latched?	Description	Test frequency	Action
UNIT NOT PROGRAMMED: Check Settings	No	The **PRODUCT SETUP ⇨⇩ INSTALLATION ⇨ RELAY SETTINGS** setting indicates the C70 is not programmed	On power up and whenever the **PRODUCT SETUP ⇨⇩ INSTALLATION ⇨ RELAY SETTINGS** setting is altered	Program all settings and then set **PRODUCT SETUP ⇨⇩ INSTALLATION ⇨ RELAY SETTINGS** to "Programmed"

7.2.2.3 Minor self-test error messages

Most of the minor self-test errors can be disabled. See the settings in the User-programmable Self-tests section in chapter 5.

Table 7-3: Minor self-test errors

Error	Latched?	Description	Test frequency	Action
DIAGNOSTIC ALARM COP: Self-test Error	Yes	This is a preliminary warning that transient errors were detected in the coprocessor. The relay remains operational but some elements can operate slightly delayed.	Module or feature dependent	Extract a Service Report through UR Setup software and provide it to GE customer service
DIAGNOSTIC ALARM DSP: Card F8L	Yes	This is a preliminary warning that there is something wrong with a DSP. The slot and DSP type is indicated in the message.	Every protection pass	Extract a Service Report through UR Setup software and provide it to GE customer service
DIAGNOSTICS FAILURE	Yes	This is a warning that there is something wrong with the DSP/coprocessor subsystem. The source of the problem is unknown as there are multiple contributors.	Every protection pass	Extract a Service Report through UR Setup software and provide it to GE customer service
DIRECT DEVICE OFF: COMM Path Incomplete	No	A direct device is configured but not connected	Every second	Check direct input and output configuration and wiring
DOS PARTITION ALARM: SELF-TEST ERROR		There is a problem with the Compact Flash memory in the CPU module	On relay power-up and afterwards once every 24 hours	Contact the factory
LOW ON MEMORY: *with 2nd line detail*	Yes	The relay periodically checks the amount of free RAM memory available and the amount of free stack available for each task against pre-defined thresholds. The second line of the self-test indicates which of the tests failed. It asserts this self-test if those tests fail.	Every five seconds	Contact the factory
MAINTENANCE ALERT: 4L Discrepancy	No	A discrepancy has been detected between the actual and desired state of a latching contact output of an installed type "4L" module	Upon initiation of a contact output state change	Verify the state of the output contact and contact the factory if the problem persists

Error	Latched?	Description	Test frequency	Action
Bad IRIG-B Signal	No	A bad IRIG-B input signal has been detected	Monitored whenever an IRIG-B signal is received	Ensure the following: - The IRIG-B cable is properly connected. - Proper cable functionality (that is, check for physical damage or perform a continuity test). - The IRIG-B receiver is functioning. - Check the input signal level (it can be less than specification). If none of these apply, then contact the factory.
Bad PB PTP Signal Bad PTP Signal	No	No PTP enabled port has good PTP signal input	Activated when no acceptable signal is being received	Ensure the following: - The Ethernet cable(s) are properly connected. - At least one PTP grandmaster-capable clock is functioning. - If a strict power profile (PP) is enabled, that entire network is PP compliant. - The network is delivering PTP messages to the relay.
Direct Ring Break	No	Direct input and output settings are configured for a ring, but the connection is not in a ring	Every second	Check direct input and output configuration and wiring
FIRST ETHERNET FAIL SECOND ETHERNET FAIL THIRD ETHERNET FAIL	Yes	A link loss detection on an Ethernet port. The link loss is due to unplugging the cable or the switch port being down.		Check the connection
Front Panel Trouble	No	The graphical front panel is not responsive for more than five seconds. The relay is still protecting, and the main CPU is not affected by this self-test.	Every second	Contact the factory
GFP Version Mismatch	No	The graphical front panel firmware revision is not synchronized with that of the CPU module in the relay	Whenever connection is established between the graphical front panel and the CPU module in the relay	Perform a UR firmware upgrade with the graphical front panel connected to the CPU module in the relay. It can be done using any communication interface (Ethernet or USB). This synchronizes the graphical firmware revision with that of the relay. If trouble persists, contact the factory.
GGIO Ind xxx oscill	No	A data item in a configurable GOOSE data set is oscillating	Upon scanning of each configurable GOOSE data set	The "xxx" text denotes the data item that has been detected as oscillating. Evaluate all logic pertaining to this item.
Oscillatory GOOSE	No	A data item in a configurable GOOSE data set is oscillating	Upon scanning of each configurable GOOSE data set	Evaluate all logic pertaining to this item
Replace Battery	Yes	The battery is weak or not functioning. It powers the real time clock. This message displays as Battery Fail in the event records. When the battery weakness reaches a critical level, the message displays persistently on the front panel and no front panel key navigation is possible.	Every five seconds. The error message displays after 60 seconds if the problem persists.	Replace the battery as outlined in the Maintenance chapter. To minimize the disruption until battery replacement, temporarily disable the battery fail function under **Settings > Product Setup > User-Programmable Self Tests**.

Error	Latched?	Description	Test frequency	Action
SFP MODULE # FAIL	No	A faulty small form-factor pluggable port (SFP) or unplugging of the SFP generates this self test message		The web page "SFP Transceiver Information" described in the previous row applies for this self test as well. The "SFP Module Fail" has higher priority and it suppresses the "Ethernet Fail" target message. The "SFP MODULE FAIL FUNCTION" setting enables/disables this self test. The target for this self test is priority-based, with the third one being the highest priority. For example, if all three SFP modules fail, then the third SFP target is activated. If the third SFP module failure resolves, then the second SFP target is activated.
SNTP Failure	No	The SNTP server is not responding	Every 10 to 60 seconds	Check that Ethernet cable(s) are properly connected. Check that configuration for the SNTP server corresponds to the actual server settings. Check connectivity to the server (ping the server IP address). Check that UR settings for both SNTP servers are configured with different IP addresses and port numbers.
PBEthPort-# Offline		Process Bus Module Ethernet port failure. Error registers when an enabled port fails.	Every five seconds	Check connection to network switch/ Merging Unit and network switch
PB SFP Module # Fail		Small form-factor pluggable port (SFP) at back of Process Bus Module is faulty or unplugged	Every five seconds	Connect or replace with same SFP type
PROTOTYPE FIRMWARE: Self Test Error		Seen until the build is tagged as being 'release candidate' or 'gold' build	Seen on startup and then continuous	Update firmware to either of these builds
RRTD COMM FAIL: Self Test Error	No	Communications with remote RTD unit (RRTD) or GPM-F failed for longer than 10 seconds	Runs only if "Com2 Usage" is set to RRTD or RRTD&GPM-F. Checked every five seconds.	Check COM2 port settings, check RS485 cables
RxGOOSE FAIL: Missing messages	No	One or more RxGOOSE messages are not being received	The self-test is activated when no message is received within the expected time interval, which is the time-to-live time in the previous message. This time can be from milliseconds to minutes.	Check GOOSE setup
RxGOOSE OFFLINE: COMM Path Incomplete	No	One or more RxGOOSE messages are not responding	Event driven. The test is performed when a device programmed to receive GOOSE messages stops receiving. This can be from 1 to 60 seconds, depending on GOOSE packets.	Check GOOSE setup

Error	Latched?	Description	Test frequency	Action
SETTINGS SAVE ERROR: Contact Factory	Yes	The relay failed to store the settings to the flash memory	When a setting is changed	Contact the factory
STORAGE MEDIA ALARM: Self Test Error	No	The CPU module fails to read from or write to the Compact Flash (CF) card inside the module. The CF card stores certain non-volatile data, such as event records, oscillography and datalogger records, fault report values, and non-volatile actual values. Settings are not stored in CF and hence are unaffected by this self-test.	On power up. Afterwards, every time the CPU accesses the CF card for reading or writing	Contact the factory
SV# STREAM TROUBLE	Yes	Asserted when 1. "3 out of 5 lost" errors are detected 2. No sampled values have been received for ~2 power cycles 3. Mismatch of test mode or simulation bit between UR and subscribed SV streams 4. Merging units subscribed by UR are not synchronized to the same grandmaster and the drift is ~2 power cycles 5. Sampled values subscribed by the relay are not synchronized according to the Setting "SmpSynch Check" defined in the relay 6. Quality of the received sampled values is not acceptable (either the quality is invalid, or questionable with Quality Check=Reject Questionable)	Every protection pass	Check: 1. Connection between Merging Unit (MU) and relay 2. SV stream configuration in the relay is matching the SV stream, for example check svID and confRev fields 3. Check the **Actual Values > PB Module > RXSV status> rxsv1(16)** page in the EnerVista software to verify the Sync Status, Quality, and delays of the received sampled values and troubleshoot accordingly 4. Check that all merging units subscribed by the UR are synchronized according to the **SmpSynch Check** setting
SYSTEM EXCEPTION: Press RESET key	Yes	Abnormal restart from modules being removed or inserted while the C70 is powered-up, when there is an abnormal DC supply, or as a result of internal relay failure.	Event driven	Contact the factory
TEMP MONITOR: OVER TEMPERATURE	Yes	The ambient temperature is greater than the maximum operating temperature (+80°C)	Every hour	Remove the C70 from service and install in a location that meets operating temperature standards
UNIT NOT CALIBRATED: *with 2nd line DSP slot number detail*	Yes	DSP module is not calibrated or calibration data is out of range	On relay startup	The respective DSP module has to be replaced, contact factory service
VOLTAGE MONITOR: *with 2nd line detail* Power Supply 12V Low Power Supply 12V High Power Supply 5V Low Power Supply 5V High	Yes	The relay detected a problem with the internal voltage rails for longer than 25 seconds	Every five seconds	Contact GE customer service

Error	Latched?	Description	Test frequency	Action
WRONG TRANSCEIVER: Self Test Error	Yes	The type of SFP does not match the CPU type. The SFP is a silver device that plugs into the rear of the CPU module. T-type CPU = All ports support fiber SFPs only U-type CPU = Maintenance port needs RJ45 SFP and the other two ports fiber SFPs V-type CPU = All ports support RJ45 SFPs only The consequence of an incorrect SFP can range from damage to the C70 to no power information for the C70 on its web page (enter IP address in a web browser, then click the **SFP Transceiver Information** — only the type of SFP displays and not power data).		A web page "SFP Transceiver Information" is provided. This page displays the type of the SFP in it. This data is to be used with the CPU type to know the cause of the problem.

7.2.2.4 HardFiber major self-test error messages

In addition to those provided by the standard UR-series devices, the UR devices implement HardFiber self-tests. These are listed here. Any abnormal diagnostic condition indicated by the LEDs or the critical failure relay also results in a self-test message, so troubleshooting is described here. For other relays, such at the B95^{Plus}, see that product's instruction manual.

Table 7-4: HardFiber major self-test errors

Error	Description	Severity	Action
EQUIPMENT MISMATCH	The number or type of installed hardware modules does not match the order code stored in the CPU. The standard UR-series Equipment Mismatch self-test is extended to cover the possible presence of a Process Card.	Protection is not available and all contact outputs and shared outputs are de-asserted	Check all modules against the order code. Ensure they are inserted properly, and cycle the control power. If a module has intentionally been added or removed use the Update Order Code command to notify the relay that the current module configuration is correct.
MODULE FAILURE	UR-series device module hardware failure detected	Protection is not available and all contact outputs and shared outputs are de-asserted	Contact the factory and supply the failure code noted in the display. Text in the message identifies the failed module (for example, H81). If operated on a Process Card failure, the Module Fail self-test seals-in (latches) till the UR-series device is restarted.
PROCESS BUS FAILURE	Mission critical data is not available via the process bus. An AC quantity is considered critical if both AC bank origins and the crosschecking settings are other than None. This self-test is also initiated by an AC input discrepancy being detected. See the description in the **Crosschecking** setting in the HardFiber manual for further information. In addition, this self-test can be initiated by user logic responding to loss of critical contact input/output or other data using the **Process Bus Failure Operand** user-programmable self-test setting. This setting is located in the **Settings > Product Setup > User-Programmable Self Test** menu.	Protection is not available and all contact outputs and shared outputs are de-asserted	First rectify any Process Bus Trouble and Brick Trouble self-test errors. Check the actual value of the operand referenced by the Process Bus Failure Operand setting, and if "On," determine the cause and rectify. If the problem persists with the foregoing all clear, the cause must be an AC input discrepancy, which is typically the result of problems in the input signals to the Bricks, or faults in the Brick input conditioning hardware. If the error was annunciated the first time significant signal was encountered, suspect the former cause and check the copper connections external to the Brick. Where multiple UR-series devices have self-test errors, look for common causes. To further isolate AC input discrepancy errors, put the relay in test-isolated mode, then one by one, temporally change an AC bank Crosschecking setting to None, until the Process Bus Failure clears. Once the problem AC bank has been identified, the values from each of the two Bricks can be examined individually by temporarily mapping each to an AC bank with a single origin.

7.2.2.5 HardFiber minor self-test error messages

Table 7-5: HardFiber minor self-test errors

Error	Description	Severity	Action
BRICK TROUBLE	Brick internal self-testing has detected trouble internal to the Brick	This self-test error does not directly inhibit protection. However, some or all of the affected Brick inputs/ outputs may not be available to the UR device.	Check the Brick environment for over/under temperatures and the voltage of its power source. If the ambient temperature and supply voltage are within Brick specifications, consult the factory. Troubles resulting from a Brick output failing to respond to an output command can only be detected while the command is active, and so in this case the target is latched. A latched target can be unlatched by pressing the front panel reset key if the command has ended, however the output can still be non-functional.
PROCESS BUS TROUBLE	Communications problems with one or more Bricks. The text of the message identifies the affected field units. This self-test is initiated by low received signal levels at either the Brick or Process Card end, and by the sustained failure to receive poll responses from the proper Brick.	This self-test error does not directly inhibit protection. However, the affected Brick inputs/outputs may not be available to the UR device.	Check the field unit actual values. An indication of equipment mismatch means that messages are being received from a Brick, but there is a discrepancy between the settings and the actual Brick serial number, order code, and/or core number. Check that the correct core on the correct Brick is patched through to the correct Process Card port, and that the field unit settings are correct. An indication of communications loss means that no messages are being received. Check that the patching is correct, and that the Brick has power. If that is not the problem, use a professional optical fiber connector cleaning kit to clean both sides of all optical fiber connections from the Process Card through to the affected Brick. If the problem continues after cleaning, consult the factory.
RTD TROUBLE: Self Test Error	The Brick is reporting that the sensed RTD field connection does not match that of an RTD or the reported DC input value is outside of the RTD temperature range, greater than 250°C (likely open sensor circuit fault) or less than -50°C (likely shorted sensor fault).	Not latched	Check field RTD settings and connections
TDR TROUBLE: Self Test Error	The Brick is reporting that the sensed transducer field connection does not match that of a transducer, or the reported DC input value is outside of the set transducer input range, or the minimum value setting is equal to the maximum value setting.	Not latched	Check field transducer settings and connections

C70 Capacitor Bank Protection and Control System

Chapter 8: Application of settings

This chapter provides example(s) of use.

8.1 Arrangement of shunt capacitor banks

8.1.1 Overview

The appropriate protection is dependent on the capacitor bank type, configuration, CTs and VTs location and connections. IEEE Standard C37.99-2000: Guide for Protection of Shunt Capacitor Banks specifies methods used for protecting different types of banks.

There are four types of arrangements and individual capacitors connections used to form a capacitor bank.

- Externally fused capacitors
- Internally fused capacitors
- Fuseless capacitors
- Unfused capacitors

These arrangements are described in the following sections.

8.1.2 Externally fused capacitors

An individual fuse, externally mounted between the capacitor unit and the capacitor bank fuse bus, protects each capacitor unit. The capacitor unit can be designed for a relatively high voltage since the external fuse is capable of interrupting a high-voltage fault. However, the kvar rating of the individual capacitor unit is usually smaller because a minimum number of parallel units are required to limit the voltage rise on remaining units and thus allow the bank to remain in service with a capacitor can out of service. A capacitor bank using fused capacitors is configured using one or more series groups of parallel-connected capacitor units per-phase, as shown.

Figure 8-1: Externally fused shunt capacitor bank and capacitor unit

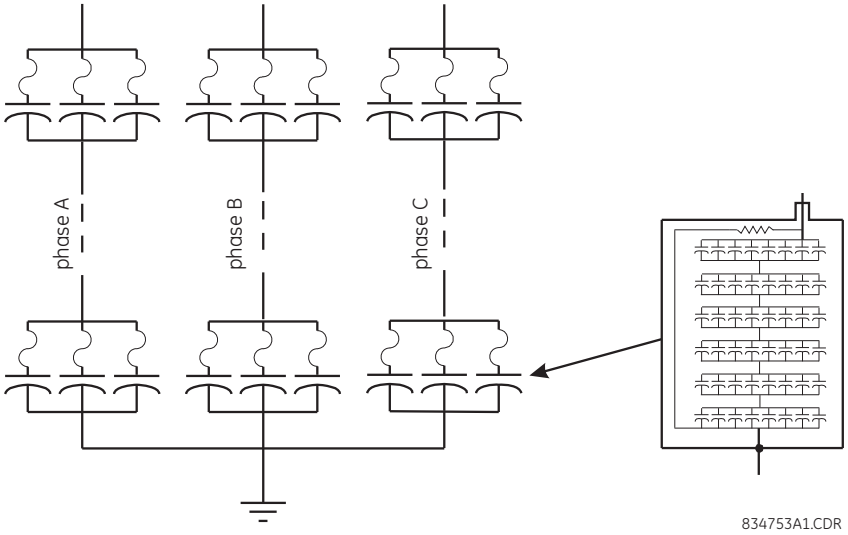

8.1.3 Internally fused capacitors

Each capacitor element is fused inside the capacitor unit. A simplified fuse is a piece of wire sized to melt under the fault current, and encapsulated in a wrapper able to withstand the heat produced by the arc during the current interruption. Upon the capacitor failure, the fuse removes the affected element only. The other elements, connected in parallel in the same group, remain in service but with a slightly higher voltage across them.

The figure illustrates a typical capacitor bank utilizing internally fused capacitor units. In general, banks employing internally fused capacitor units are configured with fewer capacitor units in parallel, and more series groups of units than are used in banks employing externally fused capacitor units. The capacitor units are built larger because the entire unit is not expected to fail.

Figure 8-2: Internally fused shunt capacitor bank and capacitor unit

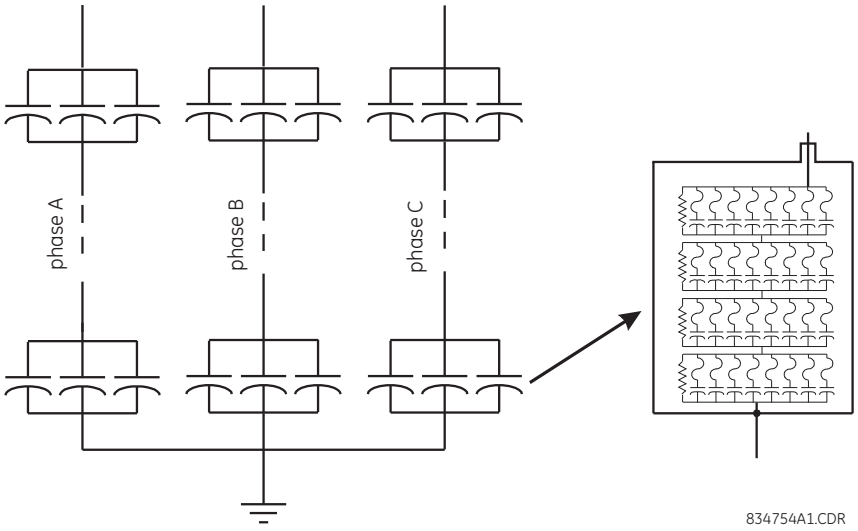

8.1.4 Fuseless capacitors

A fuseless capacitor bank typically is the most prevalent design. The capacitor units in the bank are connected in series strings between phase and neutral. The higher the bank voltage, the more capacitor elements in series.

The expected failure of the capacitor unit element is a short circuit, where the remaining capacitor elements absorb the additional voltage. For example, if there are six capacitor units in series and each unit has eight element groups in series, then there is a total of 48 element groups in the string. If one capacitor element fails, this element is shorted and the voltage across the remaining elements is 48 / 47 of the previous value, or about 2% higher. The capacitor bank remains in service; however, successive failures of elements aggravate the problem and eventually lead to the removal of the bank.

The fuseless design is usually applied for applications at or above 34.5 kV where each string has more than 10 elements in series to ensure the remaining elements do not exceed 110% rating if an element in the string shorts.

Figure 8-3: Fuseless shunt capacitor bank and series string

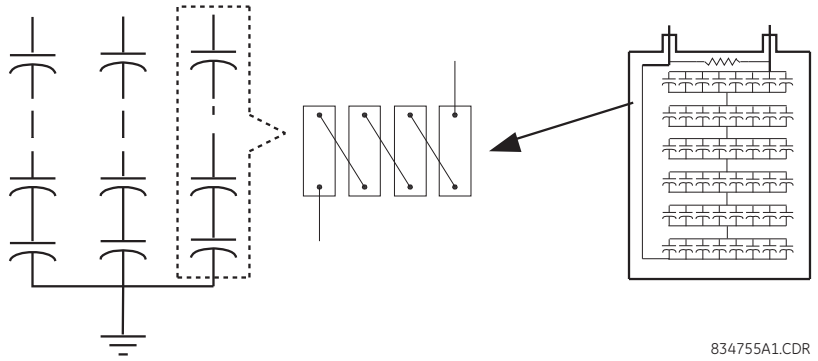

8.1.5 Unfused capacitors

Contrary to the fuseless configuration, where the units are connected in series, the unfused shunt capacitor bank uses a series or parallel connection of capacitor units. The unfused approach is normally used on banks below 34.5 kV, where series strings of capacitor units are not practical, or on higher voltage banks with modest parallel energy. This design does not require as many capacitor units in parallel as an externally fused bank.

8.2 Connections of shunt capacitor banks

8.2.1 Grounded wye-connected banks

Grounded wye capacitor banks are a series and parallel-connected capacitor units per-phase and provide a low impedance path to ground. This offers some protection from surge overvoltages and transient overcurrents.

When a capacitor bank becomes too large, making the parallel energy of a series group too high for the capacitor units or fuses (greater than 4650 kvar), the bank can be split into two wye sections. The characteristics of the grounded double wye are similar to a grounded single wye bank. Connect the two neutrals directly with a single path to ground.

The double-wye design facilitates better protection methods. Even with inherent unbalances, the two banks respond similarly to system events, and therefore, methods based on comparing one split-phase versus the other are more sensitive and less prone to system events (phase current balance technique, for example).

8.2.2 Ungrounded wye-connected banks

Ungrounded wye banks do not permit zero sequence currents, third harmonic currents, or large capacitor discharge currents during system ground faults (phase-to-phase faults can still occur and results in large discharge currents). Another advantage is that overvoltages appearing at the CT secondaries are not as high as in the case of grounded banks. However, the neutral should be insulated for full line voltage because it is momentarily at phase potential when the bank is switched or when one capacitor unit fails in a bank configured with a single group of units.

8.2.3 Delta connected banks

Delta-connected banks are generally used only at distribution voltages and are configured with a single series group of capacitors rated at line-to-line voltage. With only one series group of units, no overvoltage occurs across the remaining capacitor units from the isolation of a faulted capacitor unit.

8.2.4 H-configuration

Some larger banks use an H-configuration in each phase with a current transformer connected between the two legs to compare the current down each leg. As long as all capacitors are balanced, no current flows through the current transformer. If a capacitor fuse operates or an element shorts, some current flows through the current transformer. This bridge connection facilitates very sensitive protection. The H-arrangement is used on large banks with many capacitor units in parallel.

8.2.5 Tapped configuration

Some larger banks use a tapped configuration in each phase with voltage transformers connected from the phase to ground and from the tap to ground. As long as no fuses have opened and no elements have shorted, the ratio of these two voltages remains constant. The ratio changes with any capacitor failure in the phase, providing sensitive protection.

8.2.6 Summary

The figure summarizes the grounded wye, ungrounded wye, delta, H-bridge, and tapped connection types for capacitor banks.

Figure 8-4: Capacitor bank connections

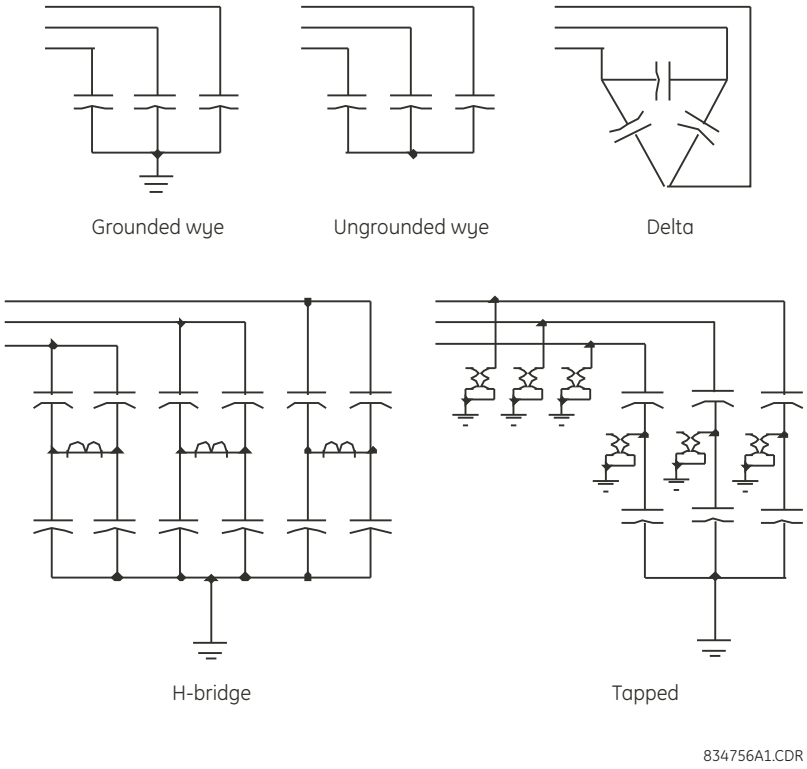

8.3 Protection methods for capacitor banks

8.3.1 Overview

The protection of shunt capacitor banks involves both bank and system protection schemes.

Bank protection schemes are provided for faults within the capacitor bank itself. Bank protection include items such as a means to disconnect a faulted capacitor unit or capacitor elements, a means to initiate a shutdown of the bank in case of faults that can lead to a catastrophic failure, and alarms to indicate unbalance within the bank.

System protection schemes are provided to protect the capacitor bank from stresses caused by the system and to protect the substation and system from stresses that can be caused by the operation of the capacitor bank. System protection includes items such as a means to limit overvoltage and excessive transient overcurrents, and to disconnect the bank in the event of a major fault within the capacitor installation. System protection can also include alarms and methods to disconnect the entire shunt capacitor bank to prevent further damage to the capacitors due to abnormal system conditions.

In externally fused capacitor banks, several capacitor element breakdowns can occur before the fuse removes the entire unit. The external fuse operates when a capacitor unit becomes (essentially) short circuited, isolating the faulted unit. Unbalance protection removes the bank from service when the resulting overvoltage becomes excessive on the remaining healthy capacitor units.

Internally fused capacitors have individual capacitor elements within a capacitor unit that are disconnected when an element breakdown occurs. The risk of successive faults is minimized because the fuse isolates the faulty element within a few cycles. Unbalance protection removes the bank from service when the resulting unbalanced voltage becomes excessive on the remaining healthy capacitor elements or units.

For fuseless or unfused capacitor banks, a failed element is short-circuited by the weld that naturally occurs at the point of failure. Unbalance protection removes the bank from service when the resulting voltage becomes excessive on the remaining healthy capacitor elements or units.

8.3.2 Capacitor unbalance protection

8.3.2.1 Connections

Unbalance protection utilizes the unbalance that occurs in a normally balanced capacitor bank to detect an abnormality and initiate appropriate action. The most important function is to promptly remove the bank from service for any fault that can result in further damage. Capacitor unbalance protection is provided in many ways, depending on the capacitor bank arrangement.

A variety of unbalance protection schemes can be applied with the C70 for internally fused, externally fused, fuseless, or unfused shunt capacitor banks, as shown in the rest of this section.

The following figure illustrates a single capacitor bank, ungrounded, with no tap available. In this case, a single CT/VT module is required.

Figure 8-5: Single bank, ungrounded, no tap available

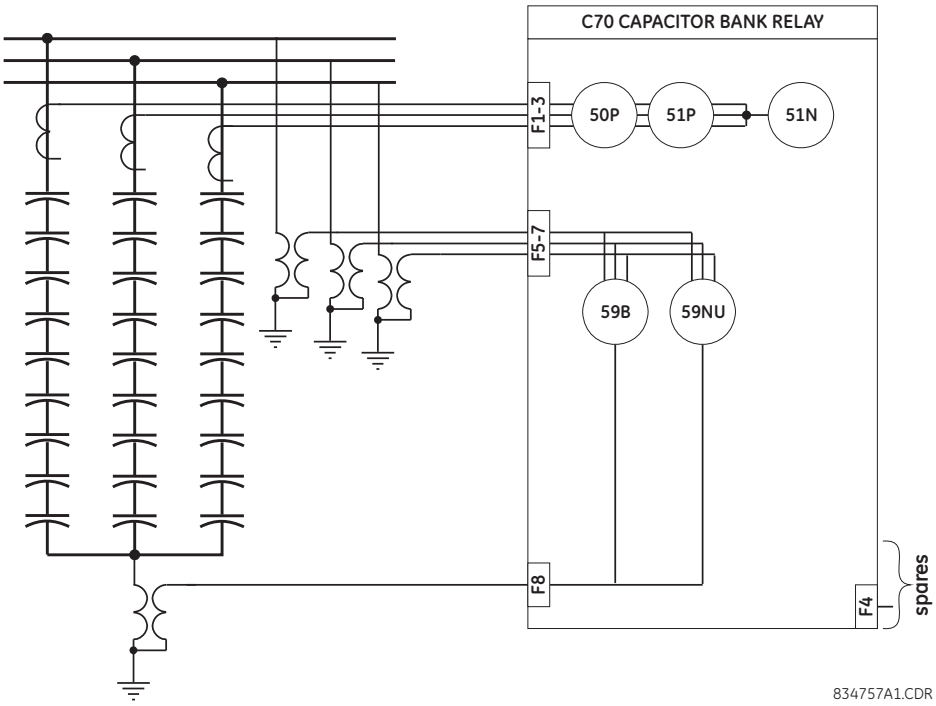

The following figure illustrates a single capacitor bank, ungrounded, with a tap. In this case, two CT/VT modules are required.

Figure 8-6: Single bank, ungrounded, with a tap

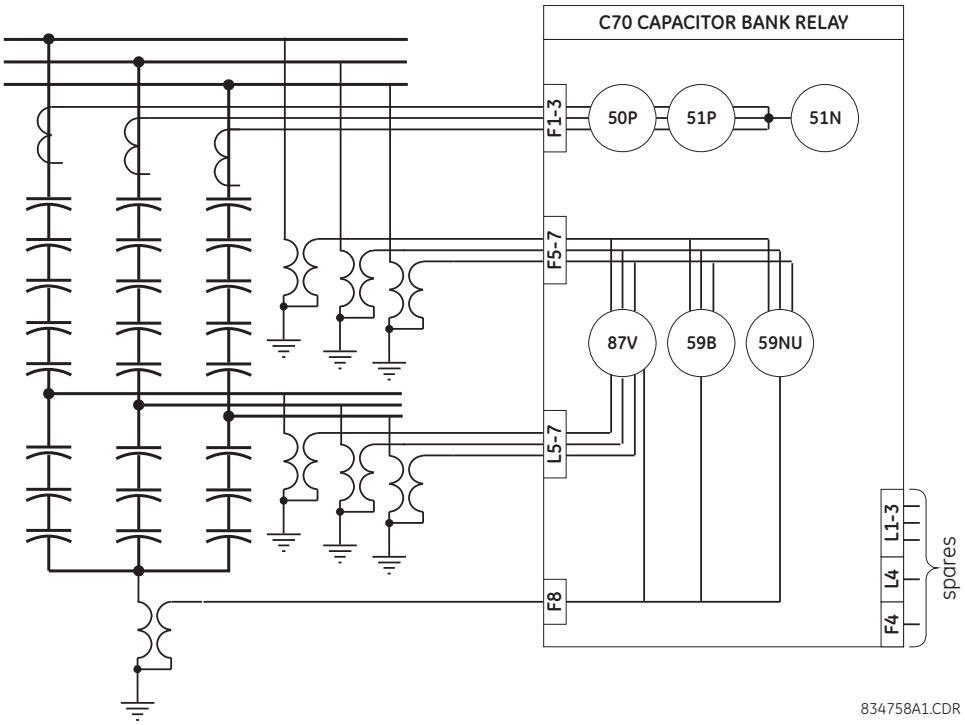

8

Figure 8-7: Single bank, grounded, with a tap

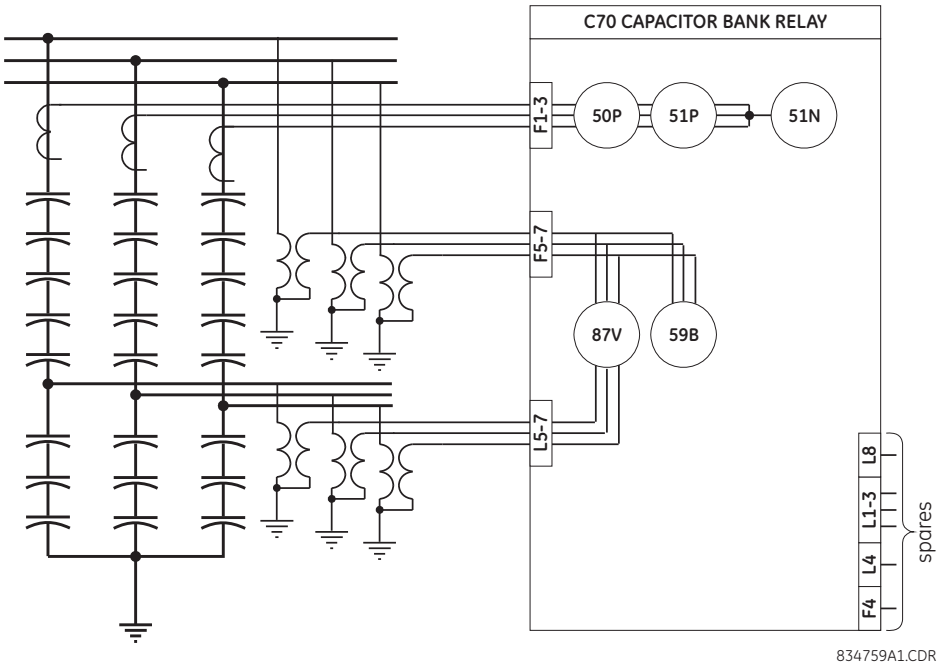

The following figure illustrates parallel capacitor banks, ungrounded, no tap available, and with current unbalance protection. In this case, two CT/VT modules are required.

Figure 8-8: Parallel banks, ungrounded, no tap available, current unbalance protection

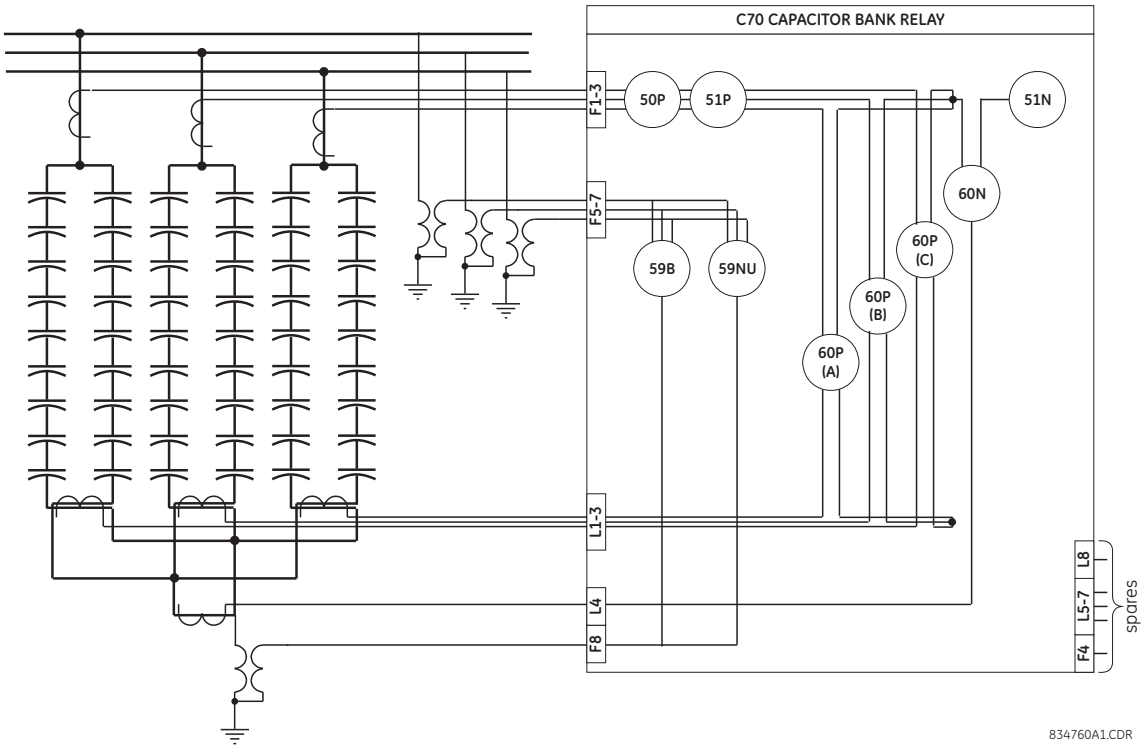

The following figure illustrates parallel capacitor banks, grounded, no tap available, and with current unbalance protection. In this case, two CT/VT modules are required.

Figure 8-9: Parallel banks, grounded, no tap available, current balance protection

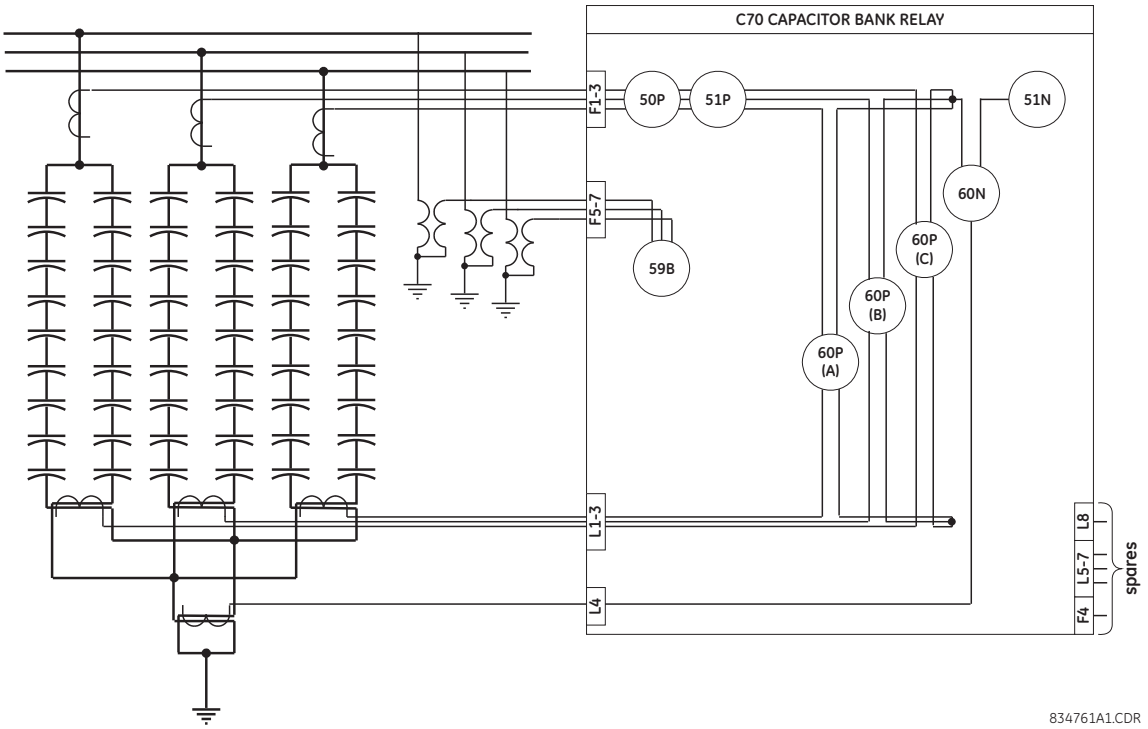

The following figure illustrates parallel capacitor banks, grounded, no tap available, with current unbalance protection and high-side CTs for each bank. In this case, two CT/VT modules are required.

Figure 8-10: Parallel banks, grounded, no tap, with current balance protection and high-side CTs

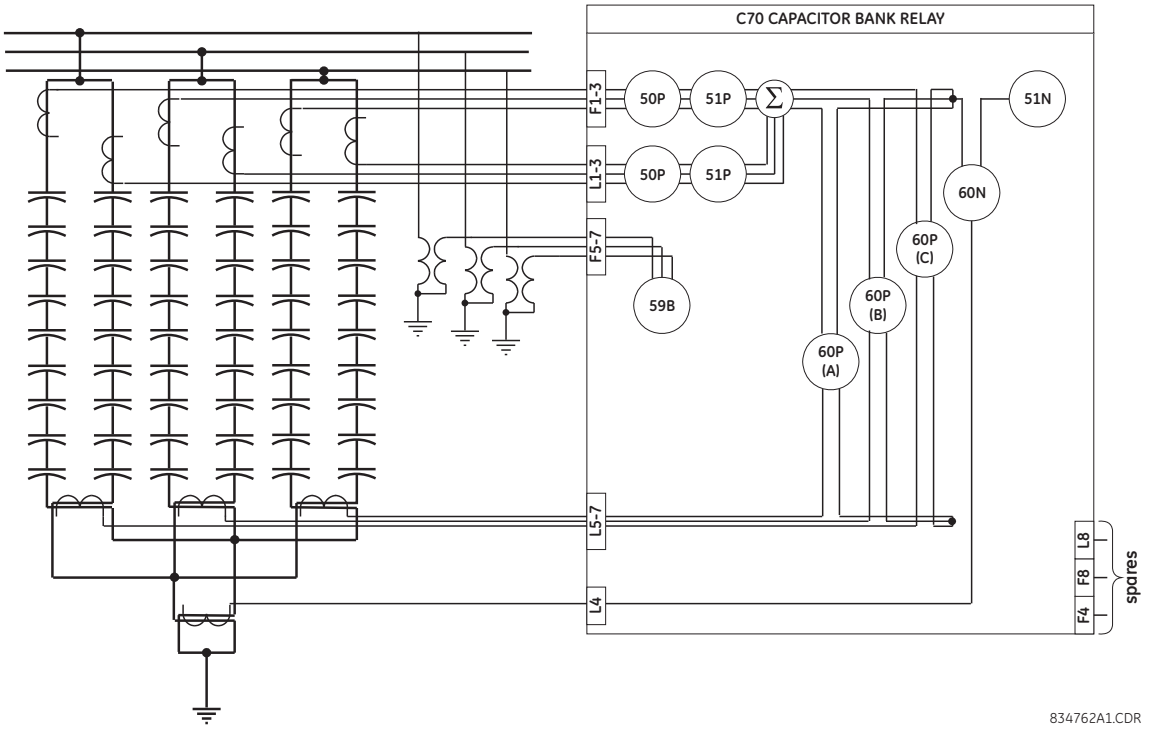

8

The following figure illustrates parallel capacitor banks, grounded, with taps and current unbalance protection. In this case, three CT/VT modules are required.

Figure 8-11: Parallel banks, grounded, with taps and current unbalance protection

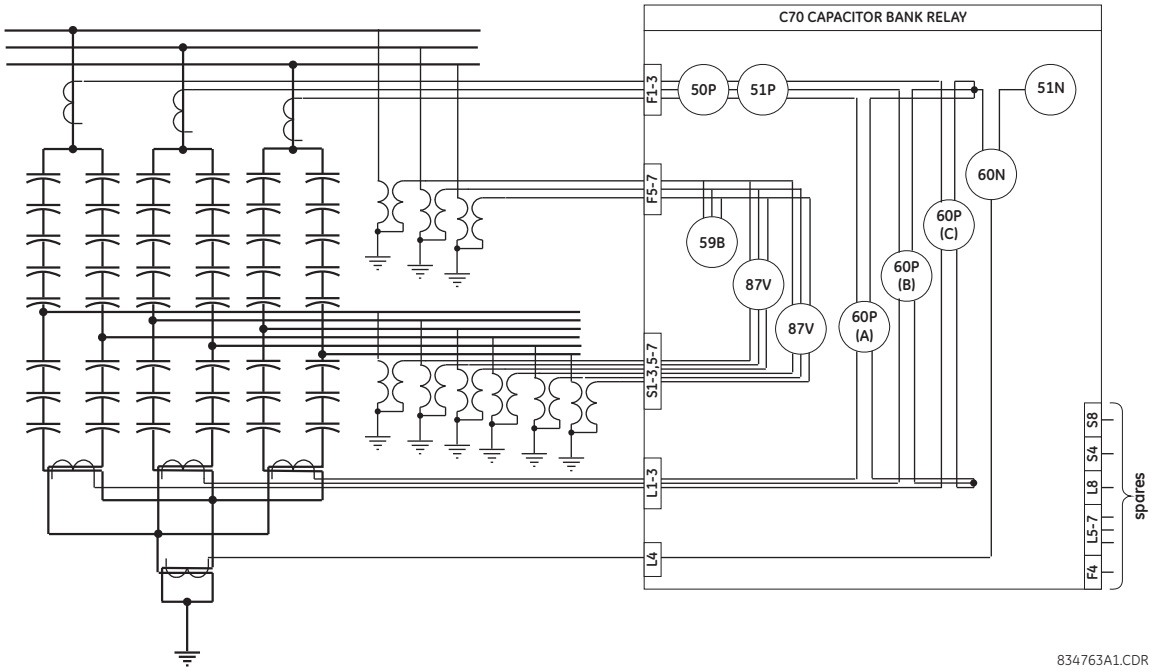

The normal functions of unbalance relaying are as follows:

- Trip the bank promptly if an unbalance indicates the possible presence of external arcing or a cascading fault within the capacitor bank
- Provide early unbalance alarm signal(s) to indicate the operation of fuses (internally or externally fused capacitors) or failure of capacitor elements (fuseless or unfused capacitors)
- Trip the bank for unbalances that are large enough to indicate that continuing operation can result in the following:
  - Damage to remaining good capacitor units or elements from overvoltage
  - Fuse malfunction
  - Inappropriate filter operation (for capacitor banks that are a part of a harmonic filter)
  - Other undesirable consequences

Note that there can be undetectable failure modes for each type of unbalance protection. These need to be backed up by other types of protection.

8.3.2.2 Unbalance trip element considerations

Note the following points when using the unbalance trip element.

- Minimize the unbalance trip element time delay to reduce damage from an arcing fault within the bank structure and prevent exposure of the remaining capacitor units to overvoltage conditions beyond their permissible limits. For a single-phase or an open-phase condition, keep the time delay short enough to avoid damage to the current transformer or voltage transformer and to the relay system.
- Have enough time delay on the unbalance trip element to avoid false operations due to inrush, system ground faults, switching of nearby equipment, and non-simultaneous pole operation of the energizing switch. For most applications, 0.1 seconds is adequate. For unbalance relaying systems that operate on a system voltage unbalance (ground fault), a delay slightly longer than the upstream protection fault clearing time is required to avoid tripping due to a system fault. Longer delays increase the probability of catastrophic bank failure.

- With grounded capacitor banks, the failure of one pole of the switching device or the single phasing from a blown bank fuse allows zero sequence currents to flow in system ground relays. Coordinate capacitor bank relaying, including the operating time of the switching device, with the operation of the system ground relays to avoid tripping system load.
- The unbalance trip element can need to be delayed to account for the settling time of the protection system on initial energization and for the transient response of certain capacitor voltage transformers, and so on, which can be a part of the unbalance protection system
- The unbalance trip scheme can include a lockout feature to prevent inadvertent closing of the capacitor bank switching device if an unbalance trip has occurred
- To allow for the effects of inherent unbalance, set the unbalance element trip to operate at a signal level halfway between the critical step and the next lower step. The critical step is the number of fuse operations or shorted elements that cause an overvoltage on healthy capacitor units in excess of 110% of the capacitor unit rated voltage or the capacitor unit manufacturer's recommended maximum continuous operating voltage. In addition, for internally fused capacitor units, the critical step can be the number of internal fuse operations at which tripping should occur as recommended by the capacitor manufacturer.
- If switch failure or single phasing due to a blown main fuse can result in the continuous voltage exceeding the relay or VT rating, configure additional elements in the relay to trip the bank for this condition
- The unbalance element detects only the unbalance in the capacitor bank and in supply voltage and does not respond to capacitor overvoltage due to a balanced system voltage above nominal. Configure the bank phase overvoltage to trip the bank for this condition.
- Use the maximum system operating voltage, with capacitor bank energized, for setting unbalance relays

8.3.2.3 Unbalance alarm element considerations

To allow for the effects of inherent unbalance within the bank, set the unbalance relay alarm to operate at about one-half the level of the unbalance signal determined by the calculated alarm condition based on an idealized bank. Set the alarm with sufficient time delay to override external disturbances.

8.3.3 Protection for rack faults (arc-over within capacitor banks)

The most effective protection for an arc-over within the capacitor bank is provided by a fast unbalance element. A short time delay for the unbalance elements minimizes the damage caused by rack faults. Intentional delays as short as 0.05 seconds have been used. This short unbalance time delay, however, should not be less than the maximum clearing time of the capacitor-unit or element fuse. Although the unbalance trip element is the most effective protection for arc detection of a series section, do not rely on the neutral voltage type of unbalance element for rack fault protection on capacitor banks where all three phases are not well separated.

Negative sequence elements can be used for inter-phase fault detection as they can be set to be more sensitive than phase overcurrent relays, but tripping should be delayed to coordinate with the other relays in the system. A setting of 10% of the rated capacitor current, taking into consideration the maximum system voltage unbalance and the maximum capacitance variation together with a time delay setting of 15 to 25 cycles, can provide adequate coordination for faults external to the bank. However, it may not prevent damage due to arcing faults within the bank structure.

8.3.4 Overvoltage

The capacitor bank and other equipment in the vicinity can be subject to overvoltages resulting from abnormal system operating conditions. If the system voltage exceeds the capacitor or equipment capability with the capacitor bank on line, remove the bank with minimum time delay. Removing the capacitor bank from the system lowers the system voltage in the vicinity of the capacitor, reducing the overvoltage on other system elements.

Especially for very large EHV capacitor banks, it is advisable to install three-phase overvoltage protection (ANSI 59B) to trip the bank quickly for extreme overvoltage conditions. To avoid nuisance tripping during transient overvoltage conditions, in some cases, tripping is delayed by a timer. The C70 provides inverse time overvoltage characteristics required to decrease tripping time for large overvoltages.

Because this tripping is not due to a fault within the capacitor bank, the capacitor bank is not locked out.

8.3.5 Overcurrent

Phase and neutral time overcurrent elements can be applied with normal settings without encountering false operations due to inrush currents. The desirable minimum pickup is 135% of nominal phase current for grounded wye banks or 125% for ungrounded banks. Set the instantaneous elements (if used) high to override inrush or outrush transients.

For effectively grounded systems with grounded wye capacitor banks, the high-frequency outrush current into an external ground fault does not normally operate the 51N ground element. The unbalanced capacitor bank load current caused by an external ground fault can be sufficient to cause the element to pick up and trip the capacitor bank if the 51N is set too low. To prevent this inadvertent tripping, the trip of the 51N element is normally set above the capacitor phase current.

8.3.6 Loss of bus voltage

In some cases, it is necessary to trip a shunt capacitor bank if the supply bus voltage is lost. Two conditions that need to be considered are:

- Re-energizing a bank with a trapped charge
- Energizing a capacitor bank without parallel load through a previously unenergized transformer

The undervoltage element (ANSI device 27B) detects loss of system voltage and trip the capacitor bank after a time delay. This delay prevents tripping of the bank for system faults external to the bank. Set the undervoltage element so that the element does not operate for voltages that require the capacitor bank to remain in service. Because this tripping is also not due to a fault within the capacitor bank (like system overvoltage tripping), the bank is not locked out.

8.4 Settings example

8.4.1 Overview

Consider protection of a capacitor bank with the following characteristics:

- V_{LL} = 138 kV fuseless
- Q_B = 21 Mvar
- Two parallel strings (S = 2) in each phase with N = 7 capacitor units rated Q_C = 500 kvar, V_C = 11.62 kV
- Each capacitor unit consisting of n = 6 series capacitors

The figure shows details. Phase capacitors are connected to ground through a neutral capacitor rated Q_{CN} = 167 kvar, V_{CN} = 0.825 kV.

Figure 8-12: Sample capacitor bank configuration

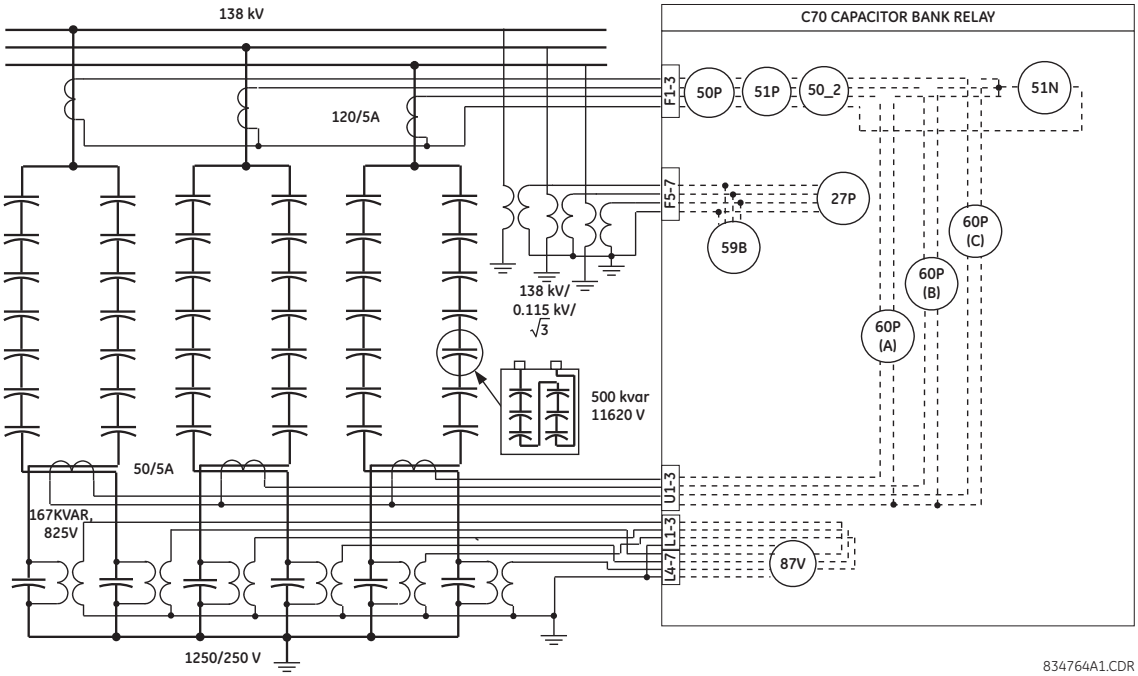

Based on the bank configuration, CT connections, and VTs connections, a C70 model is chosen with three CT/VT modules: two type 8L modules (in slots F and U) and one type 8V module (in slot M) to provide following protection functionality.

- Negative-sequence instantaneous overcurrent (ANSI 50_2) to provide fast backup protection against arcing within capacitor bank
- Phase overvoltage (ANSI 59B) to provide protection against overvoltages
- Bank overcurrent protection, phase instantaneous overcurrent (ANSI 50P), neutral instantaneous overcurrent (ANSI 50N) and phase time overcurrent (ANSI 51P) to provide protection against major faults within the capacitor bank
- Bank undervoltage (ANSI 27P) to detect loss of bus voltage and trip the bank
- Voltage differential (ANSI 87V) to detect failure of one or more capacitor elements in a given string. Three voltage differential elements can be set for this application: one between two tap voltages (ANSI 87V-1) and two between the bus voltage and tap voltage in both strings (ANSI 87V-2 and 87V-3).
- Phase current unbalance (ANSI 60P) to detect failure of one or more capacitor elements in a given string

8.4.2 VT and CT setup

The CT and VT connections are shown in the previous figure. The CT channels are connected as follows:

- The type 8L CT/VT module F1 to F3 three-phase CT channels are connected to the bus side three-phase CTs with a 120 / 5 A ratio
- The type 8L CT/VT module U1 to U3 three-phase CT channels are connected to the neutral side window CTs with a 50 / 5 A ratio

The following settings are applied in the EnerVista UR Setup software.

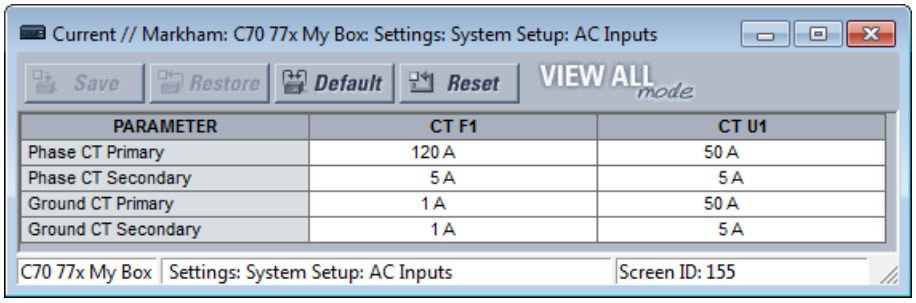

PARAMETER	CT F1	CT U1
Phase CT Primary	120 A	50 A
Phase CT Secondary	5 A	5 A
Ground CT Primary	1 A	50 A
Ground CT Secondary	1 A	5 A

The VT channels are connected as follows:

- The type 8L CT/VT module F5 to F7 three-phase VT channels are connected to the bus side three-phase VTs with a 138 / 0.115 kV ratio
- The type 8V CT/VT module M1 to M3 and M5 to M7 three-phase VT channels are connected to two tap VTs with a 1.25 / 0.25 kV ratio. The nominal voltage is calculated below for normal bank conditions and a nominal system voltage of 138 kV (see impedance calculations the following sub-section).

The nominal bus phase VT voltage is:

$$V_{tap(bus)} = \frac{13800}{\sqrt{3}} = 79674.34 \text{ V} \qquad \textbf{Eq. 8-1}$$

The nominal tap VT voltage is:

$$V_{tap(nominal)} = \frac{138000 \times Z_C^b}{\sqrt{3} \times Z_C^t} = \frac{13800 \times 4.08}{\sqrt{3} \times 1894.42} = 171.41 \text{ V} \qquad \textbf{Eq. 8-2}$$

Therefore, the tap VT secondary voltage is set as:

$$V_{tap(secondary)} = \frac{V_{tap(nominal)}}{N_{tap(VT)}} = \frac{171.41 \text{ V}}{5} = 34.28 \text{ V} \qquad \textbf{Eq. 8-3}$$

Where the VT ratio $N_{tap(VT)}$ is calculated as:

$$N_{tap(VT)} = \frac{125 \text{ kV}}{0.25 \text{ kV}} = 5 \qquad \textbf{Eq. 8-4}$$

The following settings are applied in the EnerVista UR Setup software.

Voltage // Markham: C70 77x My Box: Settings: System Setup: AC Inputs

Save | Restore | Default | Reset | VIEW ALL mode

PARAMETER	VT F5	VT M1	VT M5
Phase VT Connection	Wye	Wye	Wye
Phase VT Secondary	66.4 V	34.3 V	34.3 V
Phase VT Ratio	1200.00 :1	5.00 :1	5.00 :1
Auxiliary VT Connection	Vag	Vag	Vag
Auxiliary VT Secondary	66.4 V	66.3 V	66.4 V
Auxiliary VT Ratio	1.00 :1	1.00 :1	1.00 :1

C70 77x My Box | Settings: System Setup: AC Inputs | Screen ID: 168

8.4.3 Source assignment

The following sources must be assigned for the protection functions indicated:

- Source 1 (bus) is assigned with CT and VT banks connected to the bus, providing a signal source for overcurrent, phase current unbalance, overvoltage, and undervoltage functions
- Source 2 (tap 1) and source 3 (tap 2) are assigned with the VT banks and split window CT bank connected to the tap point of two strings of the bank, providing a signal source for the voltage differential and phase unbalance functions

The CT and VT connections shown in the earlier figure are assigned the following values in EnerVista UR Setup.

Signal Sources // Markham: C70 77x My Box: Settings: System Setup

Save | Restore | Default | Reset | VIEW ALL mode

PARAMETER	SOURCE 1	SOURCE 2	SOURCE 3
Name	Bus	Tap 1	Tap 2
Phase CT	F1	U1	U1
Ground CT	None	None	None
Phase VT	F5	M1	M5
Aux VT	None	None	None

C70 77x My Box | Settings: System Setup | Screen ID: 162

8.4.4 Bank unbalance calculations

The following values are used in unbalance calculations.

The impedance of one capacitor can:

$$Z_C^c = \frac{V_C^2}{Q_C} = \frac{(11.62\ V)^2}{500 \times 10^{-3}\ vars} = 270.05\Omega \qquad \textbf{Eq. 8-5}$$

The impedance of one capacitor element, with $n = 6$ capacitor elements per can:

$$Z_C^e = \frac{Z_C^c}{n} = \frac{270.05\Omega}{6} = 45.01\Omega \qquad \textbf{Eq. 8-6}$$

The impedance of the top healthy capacitor string:

$$Z_C^s = Z_C^c \times N = 270.05\Omega \times 7 = 1890.34\Omega \qquad \textbf{Eq. 8-7}$$

The impedance of the bottom capacitor can:

$$Z_C^b = \frac{V_{CN}^2}{Q_{CN}} = \frac{(0.825\ V)^2}{0.167\ var} = 4.08\ \Omega$$ **Eq. 8-8**

The total impedance of the healthy capacitor string:

$$Z_C^t = Z_C^s + Z_C^b = 1890.34\Omega + 4.08\Omega = 1894.42\Omega$$ **Eq. 8-9**

The maximum rated line-to-neutral system voltage:

$$V_{max} = V_C \times N + \frac{V_C \times N}{Z_C^s} \times Z_C^b = 11620\ V \times 7 + \frac{11620\ V \times 7}{1890.34\Omega} \times 4.08\ \Omega = 81515.37\ V$$ **Eq. 8-10**

The maximum rated phase current of the healthy bank:

$$I_{max} = \frac{V_{max}}{Z_C^t/2} = \frac{81515.37\ V}{1894.92\Omega/2} = 86.06\ A$$ **Eq. 8-11**

The maximum rated voltage across the healthy top section:

$$V_{top} = \frac{V_{max} \times Z_C^s}{Z_C^t} = \frac{81515.37\ V \times 1890.34\Omega}{1894.92\Omega} = 81340.40\ V$$ **Eq. 8-12**

The maximum rated voltage across the healthy bottom section:

$$V_{bottom} = \frac{V_{max} \times Z_C^b}{Z_C^t} = \frac{81515.37\ V \times 4.08\ \Omega}{1894.92\Omega} = 175.37\ V$$ **Eq. 8-13**

The voltage distribution factor for the healthy perfectly balanced bank for the 87V-2 and 87V-3 elements:

$$K_{tap} = \frac{V_{top}}{V_{bottom}} = \frac{81340.40\ V}{175.37\ V} = 463.8194$$ **Eq. 8-14**

The impedance of the string for the failed capacitors elements (for one failed element, $n_f = 1$:

$$Z_C^{sf} = Z_C^e(N \times n - n_f) + Z_C^b = 45.01\Omega \times (7 \times 6 - 1) + 4.08\ \Omega = 1849.41\Omega$$ **Eq. 8-15**

The voltage at the tap in the section with one failed capacitor element in the string:

$$V_{tap2} = \frac{V_{max} \times Z_C^b}{Z_C^{sf}} = \frac{81515.37\ V \times 4.08\ \Omega}{1849.91\ \Omega} = 179.64\ V$$ **Eq. 8-16**

The voltage of the top section with one capacitor element failed:

$$V_{top} = V_{max} - V_{tap2}$$ **Eq. 8-17**

The overvoltage at the affected capacitors with one capacitor element failed:

$$OV = \frac{V_{f(top)} \times N \times n}{V_{top} \times (N \times n - n_f)} = \frac{81335.74\ V \times 7 \times 6}{81340.40\ V \times (7 \times 6 - 1)} = 1.024\ pu$$ **Eq. 8-18**

The differential voltage between two taps with one failed capacitor element in the upper string, assuming *K* = 1 for 87V-1, in per-unit values is:

$$V_{diff(tap)} = \left|\frac{V_{tap1} - 1 \times V_{tap2}}{VT_{nom(tap)}}\right| = \left|\frac{175.374\ V - 1 \times 179.64\ V}{171.59\ V}\right| = 0.0249\ pu \qquad \textbf{Eq. 8-19}$$

The differential voltage between the bus voltage and the tap with one failed capacitor element in the upper string, assuming *K* = 1, for 87V-3 in per-unit values is:

$$V_{diff(string)} = \left|\frac{V_{f(top)} - K_{tap} \times V_{tap2}}{VT_{nom(bus)}}\right| = \left|\frac{175.374\ V - 463.8194 \times 179.64\ V}{79674.34\ V}\right| = 0.0249\ pu \qquad \textbf{Eq. 8-20}$$

The unbalance current in the window type CT between two strings with one failed capacitor element in the upper string:

$$I_{unbal} = \left|\frac{V_{max}}{Z_C^{sf} \times CT_{tap}} - \frac{V_{max}}{Z_C^{s} \times CT_{tap}}\right| = \left|\frac{81515.37\ V}{1845.33\Omega \times 50} - \frac{81515.37\ V}{1890.34\Omega \times 50}\right| = 0.0209\ pu \qquad \textbf{Eq. 8-21}$$

The following table summarizes the calculated values for the number of failed capacitors used to set the protection elements.

Table 8-1: Unbalance values for maximum system conditions

n_f	Z_C^s	Z_C^{sf}	V_{tap1}	V_{tap2}	V_{top}	OV	$V_{diff(tap)}$	$V_{diff(string)}$	I_{unbal}
0	1894.42 Ω	1894.42 Ω	175.37 V	175.37 V	81340.00 V	1.000 pu	0.0000 pu	0.0000 pu	0.0000 pu
1	1894.42 Ω	1849.41 Ω	175.37 V	179.64 V	81335.73 V	1.024 pu	0.0249 pu	0.0249 pu	0.0209 pu
2	1894.42 Ω	1804.40 Ω	175.37 V	184.12 V	81331.25 V	1.050 pu	0.0510 pu	0.0510 pu	0.0429 pu
3	1894.42 Ω	1759.39 Ω	175.37 V	188.83 V	81326.54 V	1.077 pu	0.0785 pu	0.0785 pu	0.0660 pu
4	1894.42 Ω	1714.38 Ω	175.37 V	193.79 V	81321.58 V	1.105 pu	0.1074 pu	0.1074 pu	0.0904 pu
5	1894.42 Ω	1669.38 Ω	175.37 V	199.01 V	81316.36 V	1.135 pu	0.1379 pu	0.1379 pu	0.1160 pu
6	1894.42 Ω	1624.37 Ω	175.37 V	204.52 V	81310.85 V	1.167 pu	0.1701 pu	0.1701 pu	0.1431 pu
7	1894.42 Ω	1579.36 Ω	175.37 V	210.35 V	81305.02 V	1.200 pu	0.2041 pu	0.2041 pu	0.1717 pu
8	1894.42 Ω	1534.35 Ω	175.37 V	216.52 V	81298.85 V	1.235 pu	0.2401 pu	0.2401 pu	0.2020 pu
9	1894.42 Ω	1489.34 Ω	175.37 V	223.07 V	81292.30 V	1.273 pu	0.2783 pu	0.2783 pu	0.2341 pu
10	1894.42 Ω	1444.34 Ω	175.37 V	230.02 V	81285.35 V	1.313 pu	0.3188 pu	0.3188 pu	0.2682 pu

To check the limits of protection sensitivity, the same calculations are repeated for the minimum system conditions, which are considered to be 0.85 pu of nominal system voltage.

The minimum line to neutral system voltage is:

$$V_{min} = \frac{0.85 \times V_{nom}}{\sqrt{3}} = \frac{0.85 \times 138000\ V}{\sqrt{3}} = 67723\ V \qquad \textbf{Eq. 8-22}$$

The following table summarizes the unbalance values during minimum system conditions.

Table 8-2: Unbalance values for minimum system conditions

n_f	Z_C^s	Z_C^{sf}	V_{tap1}	V_{tap2}	V_{top}	OV	$V_{diff(tap)}$	$V_{diff(string)}$	I_{unbal}
0	1894.42 Ω	1894.42 Ω	145.70 V	145.70 V	67577.30 V	1.000 pu	0.0000 pu	0.0000 pu	0.0000 pu
1	1894.42 Ω	1849.41 Ω	145.70 V	149.24 V	67573.76 V	1.024 pu	0.0207 pu	0.0207 pu	0.0174 pu
2	1894.42 Ω	1804.40 Ω	145.70 V	152.97 V	67570.03 V	1.050 pu	0.0424 pu	0.0424 pu	0.0357 pu
3	1894.42 Ω	1759.39 Ω	145.70 V	156.88 V	67566.12 V	1.077 pu	0.0652 pu	0.0652 pu	0.0549 pu
4	1894.42 Ω	1714.38 Ω	145.70 V	161.00 V	67562.00 V	1.105 pu	0.0893 pu	0.0893 pu	0.0751 pu
5	1894.42 Ω	1669.38 Ω	145.70 V	165.34 V	67557.66 V	1.135 pu	0.1146 pu	0.1146 pu	0.0964 pu
6	1894.42 Ω	1624.37 Ω	145.70 V	169.92 V	67553.08 V	1.167 pu	0.1413 pu	0.1413 pu	0.1189 pu
7	1894.42 Ω	1579.36 Ω	145.70 V	174.76 V	67548.24 V	1.200 pu	0.1696 pu	0.1696 pu	0.1426 pu
8	1894.42 Ω	1534.35 Ω	145.70 V	179.89 V	67543.11 V	1.235 pu	0.1995 pu	0.1995 pu	0.1678 pu
9	1894.42 Ω	1489.34 Ω	145.70 V	185.32 V	67537.68 V	1.273 pu	0.2312 pu	0.2312 pu	0.1945 pu
10	1894.42 Ω	1444.34 Ω	145.70 V	191.10 V	67531.90 V	1.313 pu	0.2649 pu	0.2649 pu	0.2228 pu

The balance values during minimum operating conditions can be used to check sensitivity.

8.4.5 Bank voltage differential settings

The bank configuration, CT location, and VT locations allow applying three voltage differential elements:

- An 87V-1 differential element measuring the differential voltage between the two bottom taps
- An 87V-2 differential element measuring the differential voltage between the upper capacitor string and bottom capacitor can for string 1
- An 87V-3 differential element measuring the differential voltage between the upper capacitor string and bottom capacitor can for string 2

Two voltage differential (87V) stages provide trip and alarm levels during capacitor unit failures in each differential element. The capacitor units are subject to overvoltage if one or more capacitors units are shorted out. The voltage differential trip pickup setting is programmed for value of 110% of capacitor rated voltage. As seen from the previous Unbalance Values for Maximum System Conditions table, a failure of four capacitor elements causes a 10.5% overvoltage.

The pickup setting for the stage 1 differential alarm element is chosen for one element failure.

$$87V\ alarm = 0.9V_{diff(f1_max)} = 0.9 \times 0.0249\ pu = 0.0224\ pu \qquad \textbf{Eq. 8-23}$$

The alarm delay is set to 10 seconds to avoid alarming during transient conditions.

The pickup setting for the stage 2 differential trip element is programmed as the differential voltage during maximum system conditions midway between the third and fourth capacitor element failure differential voltages.

$$87V\ trip = \frac{V_{diff(f4_max)} + V_{diff(f3_max)}}{2} = \frac{0.1074\ pu + 0.0785\ pu}{2} = 0.093\ pu \qquad \textbf{Eq. 8-24}$$

Therefore, the trip delay is set to 50 ms.

The following setting values for the voltage differential 1 element between two tap voltages are programmed in the EnerVista UR Setup software.

Voltage Differential // C70_520.urs : C:\Documents and Settings...

Save | Restore | Default | Reset | VIEW ALL mode

SETTING	PARAMETER
Voltage Differential 1 Function	Enabled
Voltage Differential 1 Bus Source	Tap 1 (SRC 2)
Voltage Differential 1 Tap Source	Tap 2 (SRC 3)
Voltage Differential 1 Bank Ground	Grounded
Voltage Differential 1 Match Factor A	1.0000
Voltage Differential 1 Match Factor B	1.0000
Voltage Differential 1 Match Factor C	1.0000
Voltage Differential 1 Stage 1A Pickup	0.022 pu
Voltage Differential 1 Stage 2A Pickup	0.093 pu
Voltage Differential 1 Stage 3A Pickup	0.250 pu
Voltage Differential 1 Stage 4A Pickup	0.250 pu
Voltage Differential 1 Stage 1B Pickup	0.022 pu
Voltage Differential 1 Stage 2B Pickup	0.093 pu
Voltage Differential 1 Stage 3B Pickup	0.250 pu
Voltage Differential 1 Stage 4B Pickup	0.250 pu
Voltage Differential 1 Stage 1C Pickup	0.022 pu
Voltage Differential 1 Stage 2C Pickup	0.093 pu
Voltage Differential 1 Stage 3C Pickup	0.250 pu
Voltage Differential 1 Stage 4C Pickup	0.250 pu
Voltage Differential 1 Stage 1 Pickup Delay	10.00 s
Voltage Differential 1 Stage 2 Pickup Delay	0.05 s
Voltage Differential 1 Stage 3 Pickup Delay	1.00 s
Voltage Differential 1 Stage 4 Pickup Delay	0.20 s
Voltage Differential 1 DPO Delay	0.25 s
Voltage Differential 1 Stg 1 Block	VTFF 87V-1 On (VO1)
Voltage Differential 1 Stg 2 Block	VTFF 87V-2 On (VO2)
Voltage Differential 1 Stg 3 Block	OFF
Voltage Differential 1 Stg 4 Block	OFF
Voltage Differential 1 Target	Self-reset
Voltage Differential 1 Events	Disabled

C70_520.urs | Grouped Elements: Group 1: Voltage Elements

Note that match factor shown above assumes perfect bank balance. This must be adjusted when the bank is energized during the differential function auto-setting procedure tune up.

The voltage differential element must be blocked during a VT fuse failure at any tap. The voltage differential element is dependent on both source VTs. These VTs must be blocked if one or both of them has a VT fuse failure condition. Therefore, as shown in the following figure, a blocking input for each element is created with FlexLogic.

Figure 8-13: Voltage differential blocking during VT fuse failure

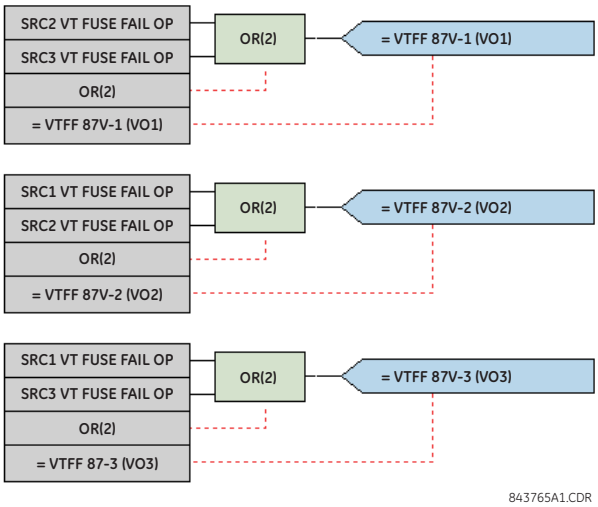

The 87V-2 and 87V-3 differential elements for the strings against tap voltage are created in a similar manner. In these cases, the K factor is different, reflecting the voltage division of K = 463.8194 between the string and tap capacitor voltages.

8.4.6 Bank phase current unbalance settings

Two phase current unbalance (ANSI 60P) stages are used to provide trip and alarm levels during capacitor unit failures in each differential element.

The pickup setting for the stage 1 phase current unbalance alarm element is programmed for one element failure.

$$60P\ \text{alarm} = 0.9 I_{unbal(f1_max)} = 0.9 \times 0.0209\ \text{pu} = 0.019\ \text{pu} \qquad \textbf{Eq. 8-25}$$

Therefore, the alarm delay is specified as 10 seconds. The following setting values are programmed in the EnerVista UR Setup software.

Phase Unbalance // Markham: C70 77x My Box: Settings: Grouped Elem...

Save | Restore | Default | Reset | VIEW ALL mode

SETTING	PARAMETER
Phase Current Unbalance 1 Function	Enabled
Phase Current Unbalance 1 Dif Source	Tap 1 (SRC 2)
Phase Current Unbalance 1 Bank Source	Bus (SRC 1)
Phase Current Unbalance 1 Inhnt Factor A	0.0000
Phase Current Unbalance 1 Inhnt Factor B	0.0000
Phase Current Unbalance 1 Inhnt Factor C	0.0000
Phase Current Unbalance 1 Stg 1A Pickup	0.019 pu
Phase Current Unbalance 1 Stg 2A Pickup	0.078 pu
Phase Current Unbalance 1 Stg 3A Pickup	2.000 pu
Phase Current Unbalance 1 Stg 4A Pickup	2.000 pu
Phase Current Unbalance 1 Stg 1B Pickup	0.019 pu
Phase Current Unbalance 1 Stg 2B Pickup	0.078 pu
Phase Current Unbalance 1 Stg 3B Pickup	2.000 pu
Phase Current Unbalance 1 Stg 4B Pickup	2.000 pu
Phase Current Unbalance 1 Stg 1C Pickup	0.019 pu
Phase Current Unbalance 1 Stg 2C Pickup	0.078 pu
Phase Current Unbalance 1 Stg 3C Pickup	2.000 pu
Phase Current Unbalance 1 Stg 4C Pickup	2.000 pu
Phase Current Unbalance 1 Stg 1 Pkp Delay	10.00 s
Phase Current Unbalance 1 Stg 2 Pkp Delay	0.05 s
Phase Current Unbalance 1 Stg 3 Pkp Delay	50.00 s
Phase Current Unbalance 1 Stg 4 Pkp Delay	50.00 s
Phase Current Unbalance 1 Dpo Delay	0.25 s
Phase Current Unbalance 1 Stg 1 Block	OFF
Phase Current Unbalance 1 Stg 2 Block	OFF
Phase Current Unbalance 1 Stg 3 Block	OFF
Phase Current Unbalance 1 Stg 4 Block	OFF
Phase Current Unbalance 1 Target	Self-reset
Phase Current Unbalance 1 Events	Disabled

C70 77x My Box | Settings: Grouped Elements: Group 1: Phase Curr | Screen ID: 216

The pickup setting for the stage 2 current unbalance trip element is specified as the unbalance current during maximum system conditions midway between the third and fourth capacitor element failure unbalance currents.

$$60P\ trip = \frac{I_{unbal(f4_max)} + I_{unbal(f3_max)}}{2} = \frac{0.0904\ pu + 0.0660\ pu}{2} = 0.078\ pu \qquad \textbf{Eq. 8-26}$$

Therefore, the trip delay is chosen 50 ms.

8

8.4.7 Bank phase overvoltage settings

To protect the capacitor bank from overvoltage resulting from abnormal system conditions, the capability of the bank to withstand transient overvoltages must be evaluated according to the IEEE 1036-1992 standard or to manufacturer specifications. For example, consider the following manufacturer overvoltage data:

- 2 pu overvoltage toleration for 0.25 second
- 1.5 pu overvoltage toleration for 15 seconds
- 1.25 pu overvoltage toleration for 5 minutes

When the relay settings are calculated, the number of prospective overvoltage transients stressing the capacitor insulation during the bank lifetime must be taken into account. As such, it is preferable to set the relay conservatively.

Based on the manufacturer overvoltage data outlined, three overvoltage trip stages are applied using a factor of 0.9 for the stage pickup overvoltage levels and half of the allowable time outlined.

$$\begin{aligned} \text{59B pickup (stage 1)} &= 0.9 \times 1.25 = 1.125 \text{ pu} \\ \text{59B pickup (stage 2)} &= 0.9 \times 1.5 = 1.35 \text{ pu} \\ \text{59B pickup (stage 3)} &= 0.9 \times 2 = 1.80 \text{ pu} \end{aligned} \quad \textbf{Eq. 8-27}$$

$$\begin{aligned} \text{59B delay (stage 1)} &= 0.5 \times 5 \times 60 = 150 \text{ seconds} \\ \text{59B delay (stage 2)} &= 0.5 \times 15 = 7.5 \text{ seconds} \\ \text{59B delay (stage 3)} &= 0.5 \times 0.25 = 0.125 \text{ seconds} \end{aligned} \quad \textbf{Eq. 8-28}$$

The following setting values are programmed in the EnerVista UR Setup software.

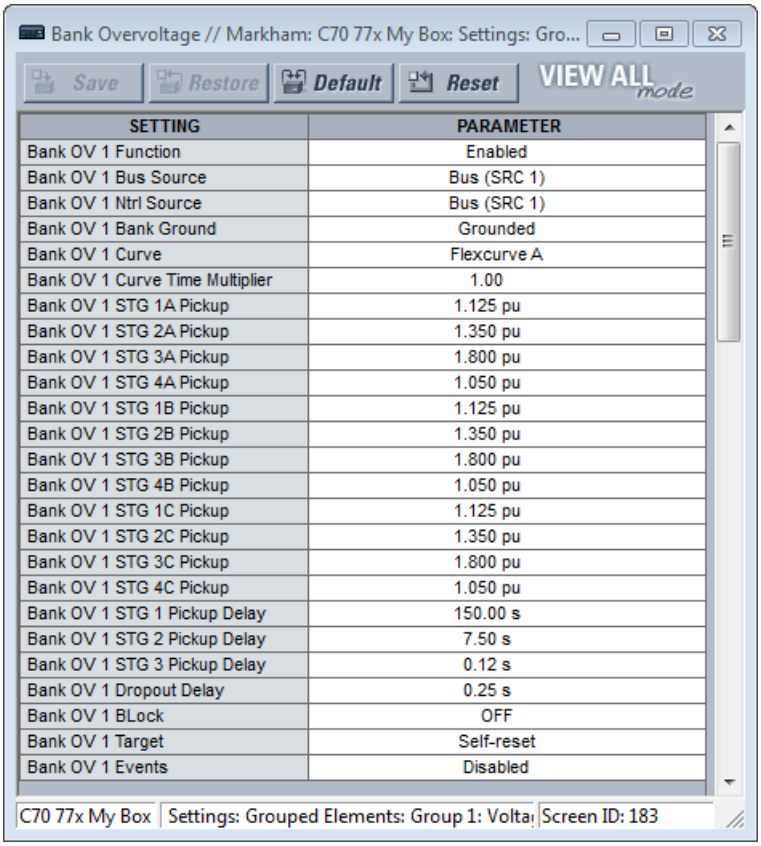

SETTING	PARAMETER
Bank OV 1 Function	Enabled
Bank OV 1 Bus Source	Bus (SRC 1)
Bank OV 1 Ntrl Source	Bus (SRC 1)
Bank OV 1 Bank Ground	Grounded
Bank OV 1 Curve	Flexcurve A
Bank OV 1 Curve Time Multiplier	1.00
Bank OV 1 STG 1A Pickup	1.125 pu
Bank OV 1 STG 2A Pickup	1.350 pu
Bank OV 1 STG 3A Pickup	1.800 pu
Bank OV 1 STG 4A Pickup	1.050 pu
Bank OV 1 STG 1B Pickup	1.125 pu
Bank OV 1 STG 2B Pickup	1.350 pu
Bank OV 1 STG 3B Pickup	1.800 pu
Bank OV 1 STG 4B Pickup	1.050 pu
Bank OV 1 STG 1C Pickup	1.125 pu
Bank OV 1 STG 2C Pickup	1.350 pu
Bank OV 1 STG 3C Pickup	1.800 pu
Bank OV 1 STG 4C Pickup	1.050 pu
Bank OV 1 STG 1 Pickup Delay	150.00 s
Bank OV 1 STG 2 Pickup Delay	7.50 s
Bank OV 1 STG 3 Pickup Delay	0.12 s
Bank OV 1 Dropout Delay	0.25 s
Bank OV 1 BLock	OFF
Bank OV 1 Target	Self-reset
Bank OV 1 Events	Disabled

8.4.8 Bank phase undervoltage settings

Bank undervoltage protection is required to take bank out-of-service when the supply bus voltage is lost. The pickup setting is specified as 0.7 pu with a time delay of 1 second, based on maximum fault clearing time. The bank undervoltage element is blocked during VT fuse fail conditions.

The following setting values are programmed in the EnerVista UR Setup software.

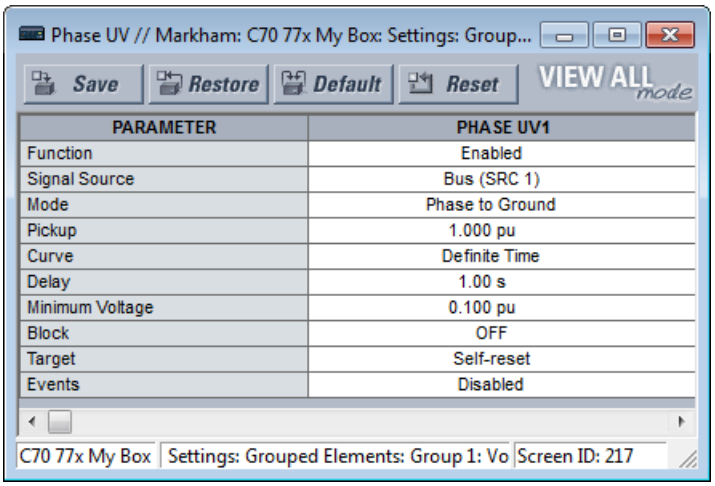

PARAMETER	PHASE UV1
Function	Enabled
Signal Source	Bus (SRC 1)
Mode	Phase to Ground
Pickup	1.000 pu
Curve	Definite Time
Delay	1.00 s
Minimum Voltage	0.100 pu
Block	OFF
Target	Self-reset
Events	Disabled

8.4.9 Bank overcurrent protection

Bank overcurrent protection is required to protect capacitor banks against major faults, such as line-to-line or line-to-ground faults. Set overcurrent protection to be as low and as fast as possible, with only enough delay to avoid tripping on external system disturbances.

During bank energization, the capacitor charge current inrush can cause significant neutral currents approaching the bank phase current levels. Also, during a system SLG fault, unbalanced bank neutral currents can be as high as bank phase currents. Because of these considerations, the neutral time overcurrent pickup is programmed equal to the phase time overcurrent pickup and is set to 1.25 pu. Specify the delay for these elements to be longer than the maximum system fault clearing time (for example 0.5 second).

The phase instantaneous overcurrent element can be set to a value three to four times the capacitor bank rated current to override back-to-back bank switching.

Negative-sequence instantaneous overcurrent protection is required to provide backup protection for phase current unbalance during rack faults in the banks where phase capacitors are not well separated. Programming the negative-sequence instantaneous overcurrent pickup at 10% of the nominal bank phase current with a delay of 250 to 400 ms typically provides adequate coordination for faults external to the bank and protection for internal rack faults.

C70 Capacitor Bank Protection and Control System

Chapter 9: Theory of operation

This chapter outlines advanced information on operation.

9.1 Overview

9.1.1 General operation

Static capacitor banks are constructed with a large number of individual capacitor elements connected in a series/parallel arrangement designed to distribute the system voltage equally among the elements. Equal distribution of voltage is important as the rate of internal insulation degradation is a highly non-linear function of element voltage, with degradation accelerating very rapidly with overvoltage greater than 10%. To obtain balanced voltages in spite of manufacturing tolerances in the capacitance of the elements, the elements are positioned in the bank according to their actual capacitance such that parallel groups have a uniform total capacitance, and a good voltage balance is obtained. However, once in service, individual elements can fail randomly upsetting the balance, increasing the stress on other elements, and causing their early failure. Early failure of an element due to unbalanced voltage predictably further unbalances the bank, leading to cascading failure.

The purpose of capacitor unbalance protection is to detect unbalance caused by element failures as soon as practical, and to either alarm the condition so that repair can be scheduled for a convenient time, or to automatically remove the bank from service to prevent deterioration in the healthy elements pending repair. A brut force method is to directly measure the voltage across each element, operating on detecting an abnormally high voltage on any element. However, this approach is seldom economic due to the large number of voltage transducers required. Thus, the C70 supports various other methods, the suitability of each dependant on the capacitor bank configuration, and on the VTs and CTs available.

The challenge faced by all capacitor unbalance protections not using the brut force method is the increased sensitivity required due to the less than ideal number of monitoring points, and compensation for the increased effects of inherent unbalance due to manufacturing tolerance and due to system voltage unbalance.

9.1.2 Bank phase overvoltage (ANSI 59B)

The capacitor unbalance protection functions discussed in the following sections are intended to detect failures in the capacitor bank itself that can result in a few capacitor elements being overstressed. However, these unbalance protection functions do not detect overstressed elements in a healthy bank that can result from external problems. Protection against overstressing elements from system overvoltages is instead provided by the bank phase overvoltage protection.

Ideally, a bank overvoltage protection measures the voltage across each capacitor string, allowing an accurate inference of the voltage across each element in the string, assuming that the string voltage is equally divided across the elements. This is readily done in grounded wye capacitor banks by simply measuring the three system phase-to-ground voltages. For instance, assuming that the bank is healthy, the elements shown in the grounded banks of the following figure are each stressed at one-ninth of system phase-to-ground voltage, allowing the inference that the elements are overstressed when the system phase-to-ground voltage exceeds nine times the element safe operating voltage limit. The true RMS value of these phase-to-ground quantities are what the bank phase overvoltage protection measures when the bus source is set for wye VTs and the bank overvoltage protection ground setpoint is set to grounded.

Figure 9-1: Bank overvoltage protection for grounded and ungrounded banks

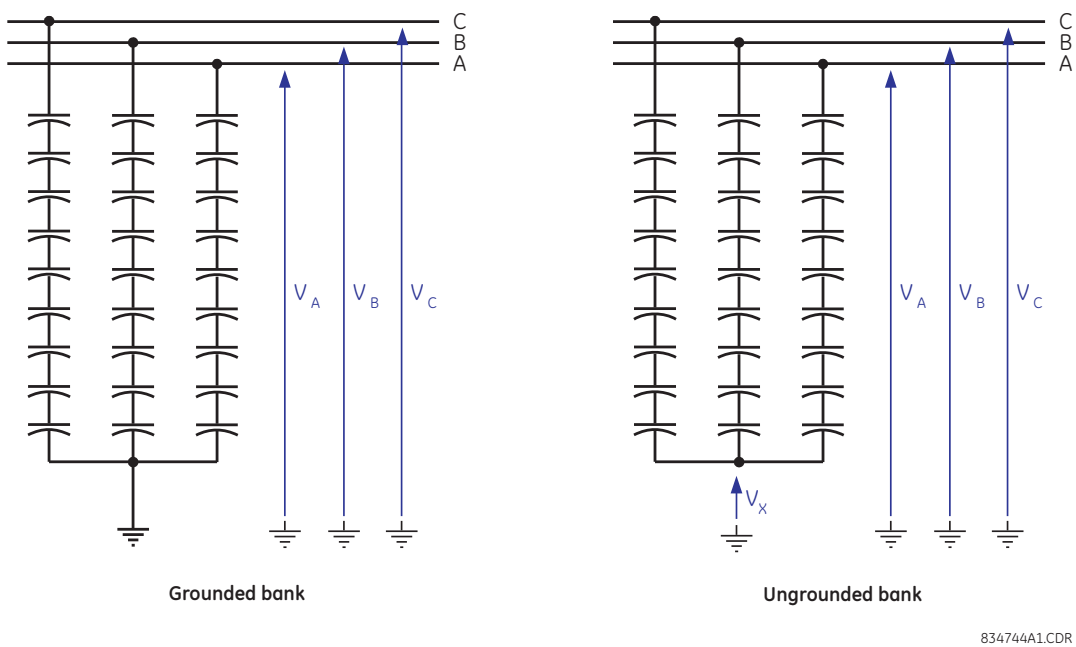

For a capacitor bank that is ungrounded, the voltage across the string is equal to the difference between the system phase-to-ground voltage and the bank neutral voltage. Elements shown in the ungrounded banks in the preceding figure are overstressed when the following quantities exceed nine times the element safe operating voltage limit.

$$|V_A - V_X|_{RMS},\ |V_B - V_X|_{RMS},\ \text{or}\ |V_C - V_X|_{RMS} \qquad \textbf{Eq. 9-1}$$

These quantities are what the bank phase overvoltage protection measures when the bus source is set for wye VTs, the auxiliary channel of the neutral source is set for a neutral voltage, and the bank overvoltage protection ground setpoint is set to ungrounded.

When the neutral voltage of an ungrounded wye capacitor bank is not measured or you do not want to use the neutral voltage measurement, the string voltage can still be determined using the assumption that the bank is balanced. For an balanced ungrounded bank the neutral voltage V_X is:

$$V_X = \frac{1}{3}(V_A + V_B + V_C) \qquad \textbf{Eq. 9-2}$$

As such, the A-string voltage is:

$$\begin{aligned} |V_A - V_X|_{RMS} &= \left|V_A - \frac{1}{3}(V_A + V_B + V_C)\right|_{RMS} \\ &= \frac{1}{3}|2V_A - V_B - V_C|_{RMS} \\ &= \frac{1}{3}|V_{AB} - V_{CA}|_{RMS} \end{aligned} \qquad \textbf{Eq. 9-3}$$

9

Similarly, the B-string and C-string voltages are:

$$\frac{1}{3}\left|V_{BC} - V_{AB}\right|_{RMS} \quad \text{and} \quad \frac{1}{3}\left|V_{CA} - V_{BC}\right|_{RMS} \qquad \textbf{Eq. 9-4}$$

These quantities are what the bank phase overvoltage protection measures when the bus source is set for wye VTs, and the bank overvoltage protection ground setpoint is set to "Ungrd w/o Vn."

In applications where the bus VTs are delta-connected, the bus phase-to-ground voltages and therefore the bus zero sequence voltage are unknown. However, as shown in the preceding equations, string voltages can be determined for an ungrounded balanced bank using only phase-to-phase bus voltages. In the case of a grounded bank, we can calculate that the A-string voltage is:

$$\begin{aligned} \left|V_A\right|_{RMS} &= \frac{1}{3}\left|3V_A + (V_B - V_B) + (V_C - V_C)\right|_{RMS} \\ &= \frac{1}{3}\left|V_A - V_B - V_C + V_A + (V_A + V_B + V_C)\right|_{RMS} \\ &= \frac{1}{3}\left|V_{AB} - V_{CA} + 3V_0\right|_{RMS} \end{aligned} \qquad \textbf{Eq. 9-5}$$

If we make the assumption that the zero-sequence voltage is negligible, which is reasonable when the system is normal (non-faulted), then the string voltages for grounded banks are the same as for the ungrounded balanced banks:

$$\frac{1}{3}\left|V_{AB} - V_{CA}\right|_{RMS}, \frac{1}{3}\left|V_{BC} - V_{AB}\right|_{RMS}, \text{ or } \frac{1}{3}\left|V_{CA} - V_{BC}\right|_{RMS} \qquad \textbf{Eq. 9-6}$$

These quantities are what the bank phase overvoltage protection measures whenever the bus source is set for delta VTs.

9.1.3 Voltage differential (ANSI 87V)

9.1.3.1 Operating principle

The voltage differential function is based on a voltage divider principle. A healthy capacitor string has a constant and known match factor between its full tap (typically the bus voltage) and an auxiliary tap used by the protection. Any single element failure results in a difference between the measured factor and its value when the bank is healthy. The protection can be used on both grounded and ungrounded banks. For ungrounded banks, the neutral point voltage (V_X) must be measured by the relay and used to derive the voltage across the string.

Figure 9-2: Voltage differential application to grounded and ungrounded banks

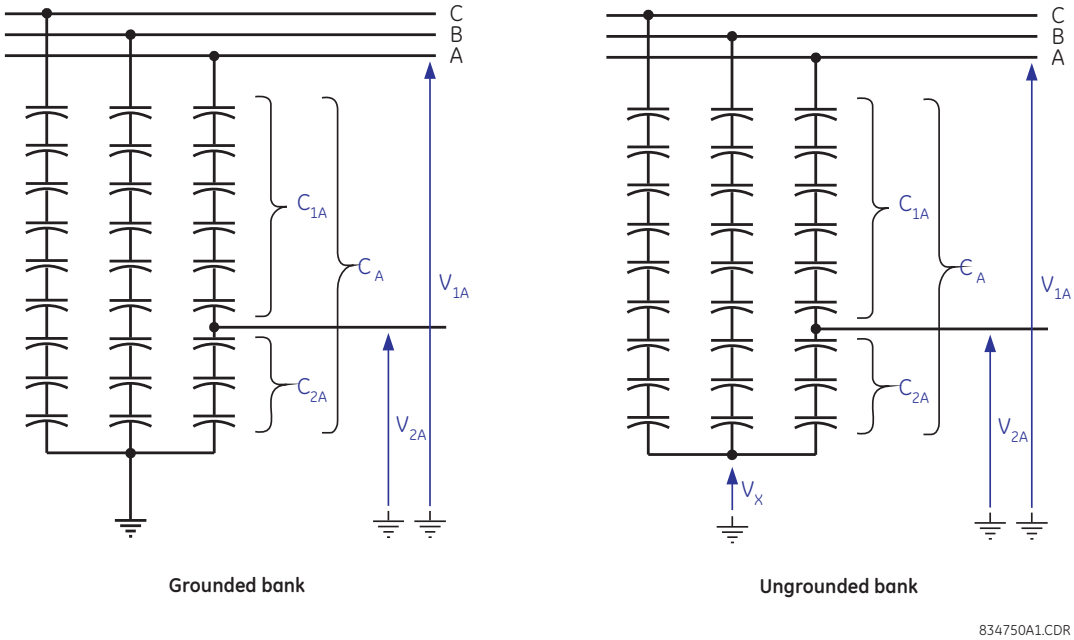

The voltage differential protection uses the following operating signal for grounded banks:

$$V_{OP(A)} = |V_{1A} - k_A V_{2A}| \qquad \textbf{Eq. 9-7}$$

The voltage differential protection uses the following operating signal for ungrounded banks:

$$V_{OP(A)} = |(V_{1A} - V_X) - k_A(V_{2A} - V_X)| \qquad \textbf{Eq. 9-8}$$

In these equations, k_A is a match factor setting for the A-leg of the bank. The voltages are as defined in the preceding figure and are in per-unit values on the nominal bus phase-to-ground voltage base. The first equation is implemented using primary voltage magnitudes, while the second equation is implemented using primary voltage phasors. The protection operates when the operate signal is greater than the set pickup level for the set pickup delay.

Identical relations apply to phases B and C.

Sensitivity is the key performance parameter. The applied comparator uses a simple integration method in addition to the standard hysteresis approach, to deal with chattering of the operating signal at the boundary of operation.

9.1.3.2 Balanced case

To understand how the voltage differential protection works, consider for simplicity the following grounded bank operating equation:

$$V_{OP(A)} = |V_{1A} - k_A V_{2A}| \qquad \textbf{Eq. 9-9}$$

The ungrounded case is similar except that all voltages have V_X subtracted. If the initial factory balanced A-leg string has an initial capacitance of C_A, divided into sub-strings with initial capacitances of C_{1A} and C_{2A}, and the bank is energized with system phase-to-ground voltage V_{Spg}, then the string forms a voltage divider and the initial measured voltages are:

$$V_{1A} = V_{Spg} \qquad \textbf{Eq. 9-10}$$

$$V_{2A} = V_{Spg} \times \frac{C_A}{C_{2A}} \qquad \textbf{Eq. 9-11}$$

9

Substituting these results into the first equation, the initial operating signal is:

$$\begin{aligned} V_{OP(A)} &= \left|V_{1A} - k_A V_{2A}\right| \\ &= \left|V_{Spg} - k_A V_{Spg} \times \frac{C_A}{C_{2A}}\right| \\ &= V_{Spg} \times \left|1 - k_A \times \frac{C_A}{C_{2A}}\right| \end{aligned}$$

Eq. 9-12

The match factor setting k_A is chosen as:

$$k_A = \frac{C_{2A}}{C_A}$$

Eq. 9-13

Therefore, as can be seen from the previous two equations, the initial operating signal is zero.

9.1.3.3 Sensitivity

Now consider the consequences of an element failure in the upper sub-string of leg A, making a small capacitance change in C_{1A}. The effect on the operating signal can be calculated by taking the derivative of equation 9-12 with respect to C_A, holding C_{2A} constant. In the general case, the derivative of the absolute value function is messy, but in our case where the initial value is zero, the derivative of the absolute function is simply the absolute value of the derivative of its argument. The derivative is thus:

$$\begin{aligned} \frac{d}{dC_A} V_{OP(1A)} &= V_{Spg} \times \left|\frac{d}{dC_A}\left(1 - k_A \frac{C_A}{C_{2A}}\right)\right| \\ &= V_{Spg} \times \left|-\frac{k_A}{C_{2A}}\right| \\ &= V_{Spg} \times \frac{k_A}{C_{2A}} \end{aligned}$$

Eq. 9-14

Substituting equation 9-13, we have:

$$\frac{d}{dC_A} V_{OP(1A)} = V_{Spg} \times \frac{1}{C_A} \quad \text{or} \quad dV_{OP(1A)} = V_{Spg} \times \frac{dC_A}{C_A}$$

Eq. 9-15

This can be written as:

$$V_{OP(1A)}(pu) = V_{Spg}(pu) \times \Delta C_A(pu)$$

Eq. 9-16

In this equation, ΔC_A(pu) is the capacitance change as a per-unit of the leg capacitance, V_{Spg} is the system phase-to-ground voltage, and $V_{OP(1A)}$(pu) is the operating signal resulting from the failure in the upper sub-string. Both voltages are in per-unit of nominal bus phase-to-ground voltage, so V_{Spg} can be taken as 1 when the system is normal (not faulted). Note however that under external fault conditions, sensitivity can be much different from the non-fault sensitivity.

Instead of a failure in the upper sub-string, now suppose a failure in the lower sub-string. The same approach is used, except to make the algebra easier, the initial operating signal is converted to be in terms of C_{1A} using:

$$C_A = \frac{C_{1A} C_{2A}}{C_{1A} + C_{2A}} \quad \text{or} \quad C_{2A} = \frac{C_A C_{1A}}{C_{1A} - C_A}$$

Eq. 9-17

In this case, we have:

$$V_{OP(A)} = V_{Spg} \times \left| 1 - k_A \times \frac{C_A}{C_{2A}} \right| = V_{Spg} \times \left| 1 - k_A \times \frac{C_{1A} - C_A}{C_{1A}} \right| \quad \textbf{Eq. 9-18}$$

The derivative is thus:

$$\frac{d}{dC_A} V_{OP(2A)} = V_{Spg} \times \left| \frac{d}{dC_A} \left(1 - k_A \frac{C_{1A} - C_A}{C_{1A}} \right) \right| = V_{Spg} \times \left| \frac{k_A}{C_{1A}} \right| = V_{Spg} \times \frac{k_A}{C_{1A}} \quad \textbf{Eq. 9-19}$$

Substituting equation 9-17 into equation 9-13, we have:

$$k_A = \frac{C_{2A}}{C_A} = \frac{C_{1A}}{C_{1A} - C_A} \quad \text{or} \quad C_{1A} = k_A C_{1A} - k_A C_A \quad \textbf{Eq. 9-20}$$

Therefore:

$$C_{1A} = \frac{k_A C_A}{k_A - 1} \quad \textbf{Eq. 9-21}$$

Substituting this value into equation 9-19, we get:

$$\frac{d}{dC_A} V_{OP(2A)} = V_{Spg} \times \frac{k_A}{C_{1A}} = V_{Spg} \times \frac{k_A - 1}{C_A} \quad \textbf{Eq. 9-22}$$

Or alternately,

$$dV_{OP(2A)} = V_{Spg} \times (k_A - 1) \times \frac{dC_A}{C_A} \quad \textbf{Eq. 9-23}$$

The value can be expressed as:

$$V_{OP(2A)}(pu) = V_{Spg}(pu) \times (k_A - 1) \times \Delta C_A(pu) \quad \textbf{Eq. 9-24}$$

In this equation, $\Delta C_A(pu)$ is the capacitance change as a per-unit of the leg capacitance, V_{Spg} is the system phase-to-ground voltage, and $V_{OP(2A)}(pu)$ is the operating signal resulting from the failure in the lower sub-string. Both voltages are in per-unit of nominal bus phase-to-ground voltage, so V_{Spg} can be taken as 1 when the system is normal (not faulted). Note however that under external fault conditions sensitivity can be much different from the non-fault sensitivity.

In practice, k_A is no less than 2.0 as the tap is no more than half way up the phase string. Comparing equation 9-16 with equation 9-24, it can be seen that $V_{OP(2A)}(pu) \geq V_{OP(1A)}(pu)$, and thus that an element failure in the lower substring produces a operating signal no smaller than the same failure in the upper sub-string. Thus $V_{OP(1A)}(pu)$ represents the worse case sensitivity. A failure resulting in a 0.01 pu capacitance change in the leg capacitance results in an operating signal of at least 0.01 pu of bus phase-to-ground voltage.

9.1.3.4 Auto-setting

While a capacitor bank can be designed to have a tap at say the mid-point or the one-third point, manufacturing tolerances result in the actual tap ratio being slightly different from the design target. To prevent a spurious component in the operating signal, the match factor settings must correspond to the actual rather than the design tap ratio. As a convenient alternative to manually determining the optimum match factor settings, the relay can automatically calculate these settings from its own measurements while the capacitor is in-service, as described in the Commands and Targets chapter. The C70 sets the operate signal to zero in equation 9.7 or 9.8 and solves for the match factor k_A using the average of several successive voltage measurements. This technique has the further advantage that it to a large degree compensates for instrumentation error. However, the assumption made here is that when the auto-set command is executed, the capacitor is in an acceptably balanced state, wherein the operating signal ought to be zero. Following the auto-set command, the protection measures changes from the state that existed at the time the auto-set command executed.

9.1.4 Compensated bank neutral voltage unbalance (ANSI 59NU)

9.1.4.1 Operating principle

The neutral voltage unbalance function is applicable to ungrounded banks. Fundamentally, this function responds to an overvoltage condition of the neutral-point voltage. If the capacitor bank and the power system voltages are balanced, the neutral-point voltage is zero. If a capacitor element in the bank fails, then the bank becomes unbalanced and the neutral voltage increases.

The operate signal for the neutral voltage unbalance protection is:

$$V_{OP} = \frac{1}{3}\left|V_X(1 + k_{AB} + k_{AC}) - 3V_0 + V_B(1 - k_{AB}) + V_C(1 - k_{AC})\right| \qquad \textbf{Eq. 9-25}$$

The restraint signal for the neutral voltage unbalance protection is:

$$V_{REST} = \left|V_X + V_0\right| \qquad \textbf{Eq. 9-26}$$

In these equations, k_{AB} and k_{AC} represent capacitor bank unbalance ratio settings. The voltages are as defined in the following figure and are expressed in per-units of the nominal value of the neutral-point VT.

These equations involve phasors, not magnitudes. That is, the vector sum of the voltages is created by the protection function implementing the method.

The neutral voltage unbalance protection operates when the operate signal is greater than the set pickup level and the operate signal is greater than the set percentage of the restraint signal, all for the set pickup delay.

Sensitivity is the key performance parameter. The applied comparator uses a simple integration method in addition to the standard hysteresis approach to deal with chattering of the operating signal at the boundary of operation. In addition, a slope characteristic is used to deal with measurement errors for the involved voltages under large system unbalances, such as during a close-in external fault.

Figure 9-3: Compensated bank neutral overvoltage application

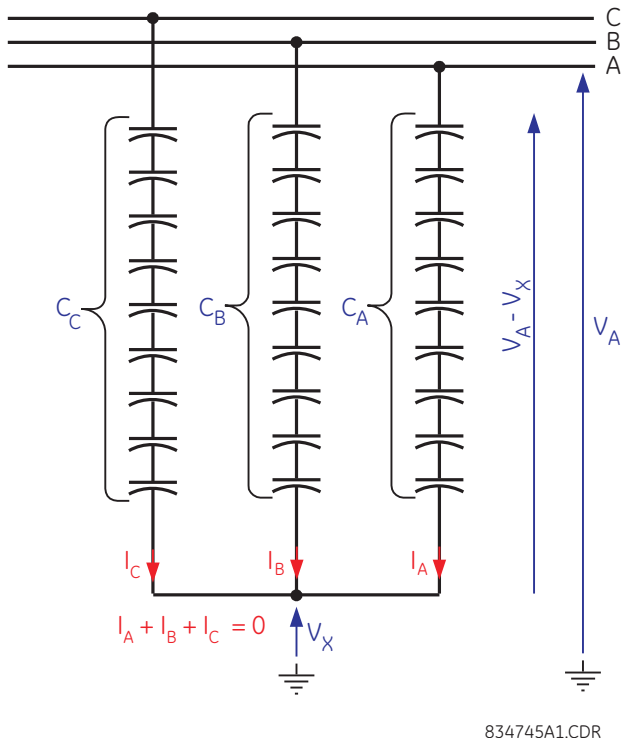

9.1.4.2 Balanced case

To understand neutral voltage unbalance protection, we can start with Kirchhoff's current law for the neutral node of the bank:

$$I_A + I_B + I_C = j\omega C_A(V_A - V_X) + j\omega C_B(V_B - V_X) + j\omega C_C(V_C - V_X) = 0 \qquad \textbf{Eq. 9-27}$$

This expression can be rearranged as follows.

$$\begin{aligned} -V_X(C_A + C_B + C_C) + V_A C_A + V_B C_B + V_C C_C &= 0 \\ \Rightarrow -V_X(C_A + C_B + C_C) + V_A C_A + V_B C_A + V_C C_A + V_B C_B - V_B C_A + V_C C_C - V_C C_A &= 0 \\ \Rightarrow -V_X(C_A + C_B + C_C) + C_A(V_A + V_B + V_C) + V_B(C_B - C_A) + V_C(C_C - C_A) &= 0 \end{aligned} \qquad \textbf{Eq. 9-28}$$

Multiplying both sides by $-1 / C_A$ and substituting the sum of the phase voltages with $3V_0$ yields:

$$V_X\left(1 + \frac{C_B + C_C}{C_A}\right) - 3V_0 + V_B\left(1 - \frac{C_B}{C_A}\right) + V_C\left(1 - \frac{C_C}{C_A}\right) = 0 \qquad \textbf{Eq. 9-29}$$

As the left hand side of this equation is equal to zero, we can subtract it from the expression inside the absolute value brackets in equation 9.25 to get:

$$\begin{aligned} V_{OP} &= \frac{1}{3}\left|V_X(1 + k_{AB} + k_{AC}) - 3V_0 + V_B(1 - k_{AB}) + V_C(1 - k_{AC}) - V_X\left(1 + \frac{C_B + C_C}{C_A}\right) + 3V_0 - V_B\left(1 - \frac{C_B}{C_A}\right) - V_C\left(1 - \frac{C_C}{C_A}\right)\right| \\ &= \frac{1}{3}\left|V_X\left(k_{AB} - \frac{C_B}{C_A} + k_{AC} - \frac{C_C}{C_A}\right) + V_B\left(\frac{C_B}{C_A} - k_{AB}\right) + V_C\left(\frac{C_C}{C_A} - k_{AC}\right)\right| \end{aligned} \qquad \textbf{Eq. 9-30}$$

9

The unbalance ratio k-values that reflect the initial or inherent bank unbalance are chosen as:

$$k_{AB} = \frac{C_B}{C_A},\ k_{AC} = \frac{C_C}{C_A} \qquad \textbf{Eq. 9-31}$$

Therefore, as seen from the previous two equations, the initial operating signal is zero.

Note that the ratios of the capacitances between phase A and the two other phases are close to unity, and therefore the correcting factors in equation 9.25 for the B and C-phase voltages are small numbers, while the factor for the V_X voltage is close to 3. If so, equation 9.25 takes a familiar simplified form:

$$V_{OP} = |V_X - V_0| \qquad \textbf{Eq. 9-32}$$

The V_0 term in the operate equation can be either the neutral component in the bus voltages (one-third of the vectorial sum of the phase voltages calculated by the relay), or directly measured neutral voltage component (open-corner-delta VT voltage).

9.1.4.3 Sensitivity

Now consider the consequences of a capacitor element failure in one leg, most conveniently leg C, making a small capacitance change in leg-C capacitance. The effect on the operating signal can be calculated by taking the derivative of equation 9.25 with respect to C_C. In the general case, the derivative of the absolute value function is messy, but in our case where the initial value is zero, the derivative of the absolute function is simply the absolute value of the derivative of its argument. As such, the derivative is:

$$\begin{aligned}\frac{d}{dC_C}V_{OP} &= \frac{1}{3}\frac{d}{dC_C}\left|(V_X(1+k_{AB}+k_{AC}) - 3V_0 + V_B(1-k_{AB}) + V_C(1-k_{AC}))\right| \\ &= \frac{1}{3}\left|(1+k_{AB}+k_{AC})\frac{dV_X}{dC_C}\right|\end{aligned} \qquad \textbf{Eq. 9-33}$$

Recall equation 9.29:

$$V_X\left(1+\frac{C_B+C_C}{C_A}\right) - 3V_0 + V_B\left(1-\frac{C_B}{C_A}\right) + V_C\left(1-\frac{C_C}{C_A}\right) = 0 \qquad \textbf{Eq. 9-34}$$

Differentiating this gives:

$$\begin{aligned}\frac{dV_X}{dC_C}\left(1+\frac{C_B+C_C}{C_A}\right) + V_X\left(\frac{1}{C_A}\right) - V_C\left(\frac{1}{C_A}\right) &= 0 \\ \Rightarrow \frac{d}{dC_C}V_X &= -\frac{V_X - V_C}{C_A\left(1+\frac{C_B+C_C}{C_A}\right)} \\ \Rightarrow \frac{d}{dC_C}V_X &= -\frac{V_X - V_C}{C_A(1+k_{AB}+k_{AC})}\end{aligned} \qquad \textbf{Eq. 9-35}$$

Substituting for V_X from equation 9.34 gives:

$$\frac{d}{dC_C}V_X = \frac{3V_0 - V_B(1-k_{AB}) - V_C(2+k_{AB})}{C_A(1+k_{AB}+k_{AC})^2} \qquad \textbf{Eq. 9-36}$$

9

This can be substituted into equation 9.33 to obtain:

$$\frac{d}{dC_C}V_{OP} = \frac{1}{3}\left|(1 + k_{AB} + k_{AC})\frac{dV_X}{dC_C}\right| = \frac{1}{3}\left|\frac{3V_0 - V_B(1 - k_{AB}) - V_C(2 + k_{AB})}{C_A(1 + k_{AB} + k_{AC})}\right| \quad \textbf{Eq. 9-37}$$

For our purposes, $C_A \cong C_B \cong C_C$, so $k_{AB} \cong 1$ and $k_{AC} \cong 1$. This results in:

$$\frac{d}{dC_C}V_{OP} \cong \frac{1}{3}\left|\frac{V_C - V_0}{C_C}\right| = \frac{1}{3} \times \frac{1}{C_C} \times |V_C - V_0| \quad \textbf{Eq. 9-38}$$

Under normal system conditions (non-fault), $V_C >> V_0$, and V_C is the system phase-to-ground voltage. The system voltage V_{Spg}, which by convention is on the bus voltage base, converted to the base of nominal value of the neutral-point VT used in these equations, is:

$$\frac{n_{bus_phs}}{n_{ntrl_aux}} \times V_{Spg} \quad \textbf{Eq. 9-39}$$

This gives:

$$\frac{d}{dC_C}V_{OP} \cong \frac{1}{3} \times \frac{1}{C_C} \times \frac{n_{bus_phs}}{n_{ntrl_aux}} \times V_{Spg}$$

$$dV_{OP} \cong \frac{1}{3} \times \frac{n_{bus_phs}}{n_{ntrl_aux}} \times V_{Spg} \times \frac{dC_C}{C_C} \quad \textbf{Eq. 9-40}$$

This can be written as:

$$V_{OP}(pu) \cong \frac{1}{3} \times \frac{n_{bus_phs}}{n_{ntrl_aux}} \times V_{Spg} \times \Delta C(pu) \quad \textbf{Eq. 9-41}$$

In these equations, $\Delta C(pu)$ is the capacitance change as a per-unit of the leg capacitance, and $V_{OP}(pu)$ is the operating signal resulting from the failure in per-unit of the nominal value of the neutral-point VT. V_{Spg} is the system phase-to-ground voltage in per-unit of the nominal system phase-to-ground voltage, so can be taken as 1 when the system is normal (not faulted). Note however that under external fault conditions sensitivity can be much different from the non-fault sensitivity. n_{bus_phs} and n_{ntrl_aux} are the VT ratios of the phase VT bank of the bus source and of the auxiliary VT channel of the neutral source, respectively.

Note that under external fault conditions sensitivity can be much different form the non-fault sensitivity. To prevent mis-operation, use a restraint and/or coordinating time delay.

9.1.4.4 Restraint

Severe system voltage unbalance, such as can occur during near-by bolted ground faults, can exacerbate measurement error in V_X or V_0, resulting in spurious operating signal. In addition, as discussed, the sensitivity can be affected. To prevent operation under these conditions, percent restraint supervision is provided using a restraint signal that is the magnitude of the vector sum of V_X and V_0, defined as follows.

$$V_{REST} = |V_X + V_0| \quad \textbf{Eq. 9-42}$$

During external ground faults, these two voltages are approximately in phase generating a large restraining signal being twice the zero-sequence voltage at the bus. A slope of few percent is typically sufficient to provide good security under large system unbalances.

Figure 9-4: Neutral overvoltage restraint

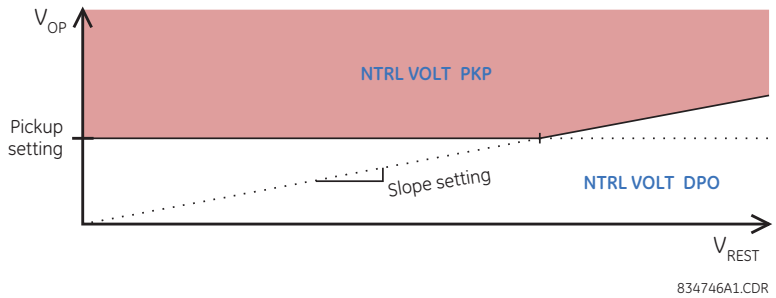

9.1.4.5 Auto-setting command

As a convenient alternative to manually determining the unbalance ratio settings, the relay can automatically calculate these settings from its own measurements while the capacitor is in-service, as described in the Commands and Targets chapter. The technique the relay uses is to set the operate signal variable in equation 9.25 to zero and solve for the unbalance ratio k-values using the average of several successive measurements of the voltages.

Determination of the two k-values using only one equation is possible as the k-values are known to be real-valued, so the complex-valued equation can be separated into real and imaginary parts, with the same two k-values in each. A solution exists as long as the cross product of the B and C-phase voltages is non-zero; that is, the capacitor bank is in-service. However, the assumption made here is that when the auto-set command is executed, the capacitor is in an acceptably balanced state, wherein the operating signal ought to be zero. Following the auto-set command, the protection measures changes from the state that existed at the time the auto-set command executed.

9.1.5 Phase current unbalance (ANSI 60P)

9.1.5.1 Operating principle

The phase current unbalance function is based on the balance between interconnected and nominally identical phase strings, and is applicable to both grounded and ungrounded installations. A window CT measuring the vectorial difference between the two phase currents is required for each phase as shown. While the two phase strings are actually identical, the measured current is zero. The failure of an element in either string results in a difference current, which is sensed by the relay. However, with the two strings slightly mismatched due to manufacturing tolerances, an inherent difference current can be present. Compensation for this inherent unbalance current is available to increase the sensitivity of the function.

The phase current unbalance function uses the following operate signal:

$$I_{OP(A)} = |I_{DIF(A)} - k_A I_A| \qquad \textbf{Eq. 9-43}$$

In this equation, k_A is the capacitor bank leg-A inherent unbalance factor setting. The currents are as defined in the following figure and are in per-unit on the nominal current of the differential source. This equation involves phasors, not magnitudes; that is, the vector sum of the currents is created by the protection function implementing the method.

Figure 9-5: Phase current unbalance application

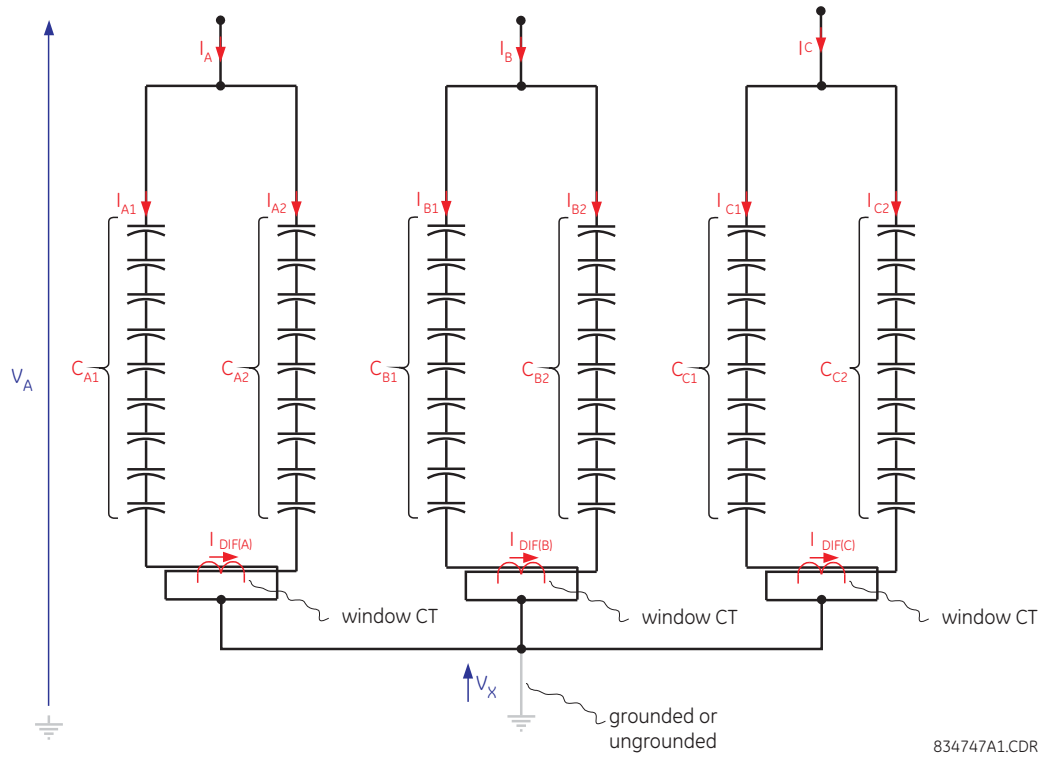

The protection operates when the operate signal is greater than the set pickup level for the set pickup delay. Identical relations apply to phases B and C.

Sensitivity is the key performance parameter. The applied comparator uses a simple integration method in addition to the standard hysteresis approach, to deal with chattering of the operating signal at the boundary of operation.

9.1.5.2 Balanced case

To understand phase current unbalance protection, first note that the currents are driven by the individual admittances in each string:

$$I_{A1} = \frac{j\omega C_{A1}(V_A - V_X)}{I_{base}}; \quad I_{A2} = \frac{j\omega C_{A2}(V_A - V_X)}{I_{base}} \qquad \textbf{Eq. 9-44}$$

In these equations, I_{base} represents the differential CT primary current rating. This places the string currents on the same per-unit base used by the C70. Voltages are expressed in primary volts, capacitances in Farads, and frequency in radians per second.

The differential current is the vector difference between the two currents:

$$\begin{aligned} I_{DIF(A)} &= I_{A1} - I_{A2} \\ &= \frac{j\omega(V_A - V_X)(C_{A1} - C_{A2})}{I_{base}} \end{aligned} \qquad \textbf{Eq. 9-45}$$

The total phase current is the vector sum of the two currents:

$$\begin{aligned} I_A &= I_{A1} + I_{A2} \\ &= \frac{j\omega(V_A - V_X)(C_{A1} + C_{A2})}{I_{base}} \end{aligned} \qquad \textbf{Eq. 9-46}$$

Inserting equation 9.46 into equation 9.45, to eliminate the voltages, we get:

$$I_{DIF(A)} = I_A \times \frac{C_{A1} - C_{A2}}{C_{A1} + C_{A2}} \qquad \textbf{Eq. 9-47}$$

Inserting this value into equation 9.43, we have:

$$\begin{aligned} I_{OP(A)} &= \left| I_{DIF(A)} - k_A I_A \right| \\ &= \left| I_A \times \frac{C_{A1} - C_{A2}}{C_{A1} + C_{A2}} - k_A I_A \right| \end{aligned} \qquad \textbf{Eq. 9-48}$$

The capacitor bank leg-A inherent unbalance factor setting k_A is chosen to be:

$$k_A = \frac{C_{A1} - C_{A2}}{C_{A1} + C_{A2}} \qquad \textbf{Eq. 9-49}$$

As can be seen from the previous two equations, the initial operating signal is zero.

9.1.5.3 Sensitivity

Now consider the consequences of an element failure in a typical string, say string A1, making a small capacitance change in C_{A1} capacitance. The effect on the operating signal can be calculated by taking the derivative of equation 9.48 with respect to C_{A1}.

In the general case, the derivative of the absolute value function is messy, but in our case where the initial value is zero, the derivative of the absolute function is simply the absolute value of the derivative of its argument. We assume here that I_A is constant, which investigation has shown results in negligible error. The derivative is thus:

$$\begin{aligned} \frac{d}{dC_{A1}} I_{OP(A)} &= \left| \frac{d}{dC_{A1}} \left(I_A \times \frac{C_{A1} - C_{A2}}{C_{A1} + C_{A2}} - k_A I_A \right) \right| \\ &= \left| I_A \times \frac{(C_{A1} + C_{A2}) - (C_{A1} - C_{A2})}{(C_{A1} + C_{A2})^2} \right| \\ &= \left| I_A \right| \times \frac{2C_{A2}}{(C_{A1} + C_{A2})^2} \\ &\cong \frac{I_A}{2} \times \frac{1}{C_{A1}} \end{aligned} \qquad \textbf{Eq. 9-50}$$

The last step assumes $C_{A1} \cong C_{A2}$ and replaces the phase current vector with its magnitude. This can be written as:

$$dI_{OP(A)} = \frac{I_A}{2} \times \frac{dC_{A1}}{C_{A1}} \qquad \textbf{Eq. 9-51}$$

Alternatively, we can say:

$$I_{OP(A)}(pu) = \frac{I_A}{2} \times \Delta C(pu) \qquad \textbf{Eq. 9-52}$$

where $\Delta C(pu)$ represents the capacitance change as a per-unit of the string capacitance, and $I_{OP(A)}(pu)$ represents the operating signal resulting from the failure in per-unit of the nominal current of the differential source. I_A is phase A terminal current on the same base. When the system is normal (no fault), I_A can be taken as the capacitor bank rated primary per-phase current I_{rated} converted to the differential source base. For example, $I_A = I_{rated} / I_{base}$, where I_{base} is again the differential CT primary current rating, or:

$$I_{OP(A)}(pu) = \frac{I_{rated}}{2 I_{base}} \times \Delta C(pu) \qquad \textbf{Eq. 9-53}$$

Note that under external fault conditions, sensitivity can be much different from the non-fault sensitivity.

9.1.5.4 Auto-setting

As a convenient alternative to manually determining inherent unbalance factor settings, the relay can automatically calculate these settings from its own measurements while the capacitor is in-service, as described in the Commands chapter. The technique that the relay uses is to set the operate signal variable to zero in equation 9.43 and solve for the inherent unbalance factor k_A using the average of several successive measurements of the currents. However, the assumption made here is that when the auto-set command is executed, the capacitor is in an acceptably balanced state, wherein the operating signal ought to be zero. Following the auto-set command, the protection measures changes from the state that existed at the time the auto-set command executed.

9.1.6 Neutral current unbalance (ANSI 60N)

9.1.6.1 Operating principle

The neutral current unbalance function is based on the balance between interconnected neutral currents of two parallel banks, and is applicable to both grounded and ungrounded installations. This section deals first with grounded applications, with a section at the end that discusses the differences with ungrounded applications. A window CT measuring the vector difference between the two neutral currents is required for grounded-wye configurations.

If the two banks were identical, then the inter-neutral current is zero. The failure of an element in either bank then results in inter-neutral current, which is sensed by the relay. However, with the two banks slightly mismatched due to manufacturing tolerances, a circulating zero-sequence current can be present. Compensation for this inherent unbalance current is available to increase the sensitivity of the function.

Figure 9-6: Neutral current unbalance application

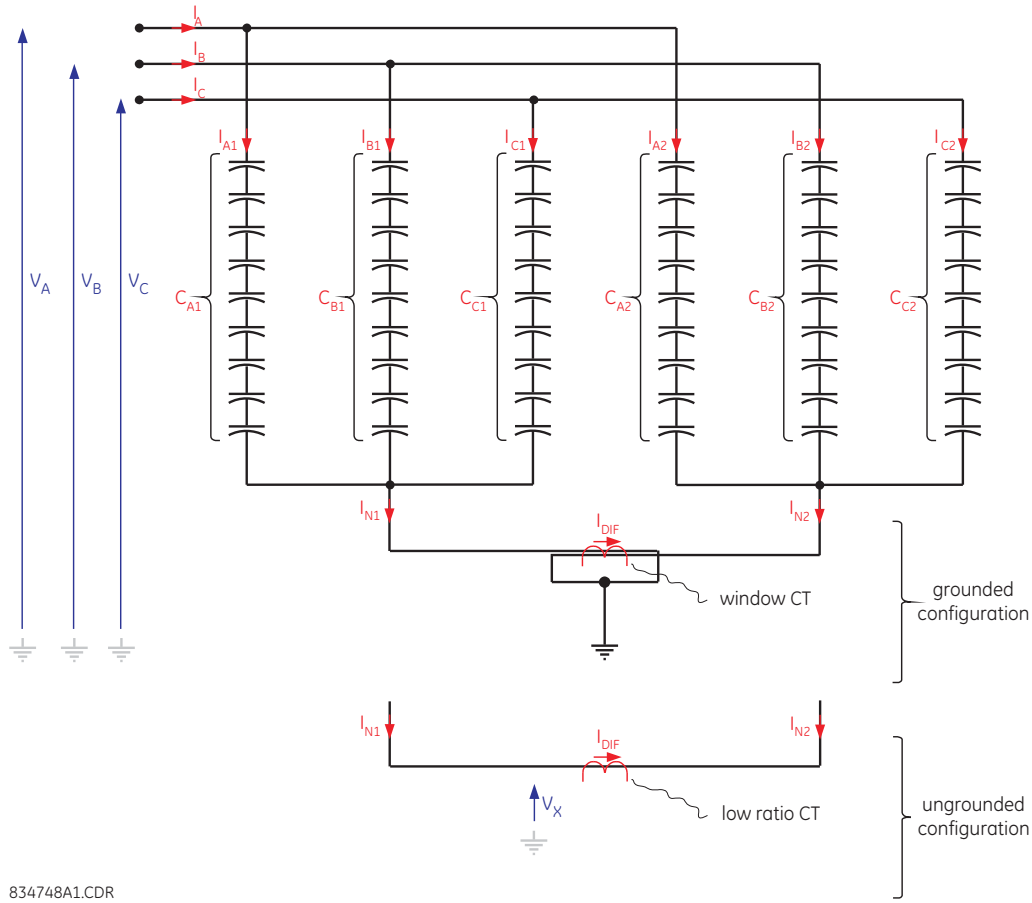

The neutral current unbalance protection uses the following operate signal:

$$I_{OP} = \left| I_{DIF} - k_1 I_1 - k_1^* I_2 \right| \qquad \textbf{Eq. 9-54}$$

The neutral current unbalance protection uses the following restraint signal:

$$I_{REST} = \left| I_0 \right| \qquad \textbf{Eq. 9-55}$$

where k_1 represents the vector capacitor bank positive sequence inherent unbalance factor setting, and k_1* represents the complex conjugate of k_1. The currents are as defined in the figure and are in per-unit values of the nominal current of the bank source ground current channel.

These equations involve phasors, not magnitudes; that is, the vector sum of the currents is created by the protection function implementing the method. The protection operates when the operate signal is greater than the set pickup level for the set pickup delay.

Sensitivity is the key performance parameter. The applied comparator uses a simple integration method in addition to the standard hysteresis approach, to deal with chattering of the operating signal at the boundary of operation.

9.1.6.2 Balanced case

The currents in the neutral current unbalance protection are driven by the individual admittances in each string:

$$I_{A1} = \frac{V_A \times j\omega C_{A1}}{I_{base}}; \quad I_{A2} = \frac{V_A \times j\omega C_{A2}}{I_{base}}$$
$$I_{B1} = \frac{V_B \times j\omega C_{B1}}{I_{base}}; \quad I_{B2} = \frac{V_B \times j\omega C_{B2}}{I_{base}}$$
$$I_{C1} = \frac{V_C \times j\omega C_{C1}}{I_{base}}; \quad I_{C2} = \frac{V_C \times j\omega C_{C2}}{I_{base}}$$

Eq. 9-56

In these equations, I_{base} represents the differential CT primary current rating, inserted here to put the string currents on the same per-unit base used by the relay. Voltages are in primary volts, capacitances in Farads, and frequency in radians per second.

The two neutral currents can be derived from these equations, as follows:

$$I_{N1} = I_{A1} + I_{B1} + I_{C1} = \frac{j\omega C_{A1}V_A + j\omega C_{B1}V_B + j\omega C_{C1}V_C}{I_{base}}$$
$$I_{N2} = I_{A2} + I_{B2} + I_{C2} = \frac{j\omega C_{A2}V_A + j\omega C_{B2}V_B + j\omega C_{C2}V_C}{I_{base}}$$

Eq. 9-57

The differential current is the vector difference between the two currents. By subtracting I_{N2} from I_{N1}, one obtains:

$$I_{DIF} = I_{N1} - I_{N2}$$
$$= \frac{j\omega[V_A(C_{A1} - C_{A2}) + V_B(C_{B1} - C_{B2}) + V_C(C_{C1} - C_{C2})]}{I_{base}}$$

Eq. 9-58

At the same time the total currents in each phase are driven by the total admittance of the two banks in each phase:

$$I_A = I_{A1} + I_{A2} = \frac{j\omega V_A(C_{A1} + C_{A2})}{I_{base}}$$
$$I_B = I_{B1} + I_{B2} = \frac{j\omega V_B(C_{B1} + C_{B2})}{I_{base}}$$
$$I_C = I_{C1} + I_{C2} = \frac{j\omega V_C(C_{C1} + C_{C2})}{I_{base}}$$

Eq. 9-59

Inserting the equations above into equation 9.58 so as to eliminate the voltages:

$$I_{DIF} = \frac{j\omega[V_A(C_{A1} - C_{A2}) + V_B(C_{B1} - C_{B2}) + V_C(C_{C1} - C_{C2})]}{I_{base}}$$
$$= I_A \times \frac{C_{A1} - C_{A2}}{C_{A1} + C_{A2}} + I_B \times \frac{C_{B1} - C_{B2}}{C_{B1} + C_{B2}} + I_C \times \frac{C_{C1} - C_{C2}}{C_{C1} + C_{C2}}$$

Eq. 9-60

Label k_A, k_B, and k_C as follows:

$$k_A = \frac{C_{A1} - C_{A2}}{C_{A1} + C_{A2}}, \quad k_B = \frac{C_{B1} - C_{B2}}{C_{B1} + C_{B2}}, \quad k_C = \frac{C_{C1} - C_{C2}}{C_{C1} + C_{C2}}$$

Eq. 9-61

Also, convert from phase coordinates into sequence components as follows, and equation 9.60 becomes:

$$\begin{aligned} I_{DIF} &= k_A(I_1 + I_2 + I_0) + k_B(\hat{a}^2 I_1 + \hat{a} I_2 + I_0) + k_C(\hat{a} I_1 + \hat{a}^2 I_2 + I_0) \\ &= I_1(k_A + \hat{a}^2 k_B + \hat{a} k_C) + I_2(k_A + \hat{a} k_B + \hat{a}^2 k_C) + I_0(k_A + k_B + k_C) \end{aligned} \quad \textbf{Eq. 9-62}$$

Substituting this into equation 9.54, we get:

$$\begin{aligned} I_{OP} &= \left| I_{DIF} - (k_1 I_1 - k_1^* I_2) \right| \\ &= \left| I_1(k_A + \hat{a}^2 k_B + \hat{a} k_C) + I_2(k_A + \hat{a} k_B + \hat{a}^2 k_C) + I_0(k_A + k_B + k_C) - k_1 I_1 - k_1^* I_2 \right| \\ &= \left| I_1(k_A + \hat{a}^2 k_B + \hat{a} k_C - k_1) + I_2(k_A + \hat{a} k_B + \hat{a}^2 k_C - k_1^*) + I_0(k_A + k_B + k_C) \right| \\ &= \left| I_1(k_A + \hat{a}^2 k_B + \hat{a} k_C - k_1) + I_2(k_A + \hat{a}^2 k_B + \hat{a} k_C - k_1)^* + I_0(k_A + k_B + k_C) \right| \end{aligned} \quad \textbf{Eq. 9-63}$$

The capacitor bank positive sequence inherent unbalance factor setting k_1 is chosen to be:

$$\begin{aligned} k_1 &= k_A + \hat{a}^2 k_B + \hat{a} k_C \\ &= \frac{C_{A1} - C_{A2}}{C_{A1} + C_{A2}} + \hat{a}^2 \frac{C_{B1} - C_{B2}}{C_{B1} + C_{B2}} + \hat{a} \frac{C_{C1} - C_{C2}}{C_{C1} + C_{C2}} \end{aligned} \quad \textbf{Eq. 9-64}$$

This allows the first and second terms in the I_{OP} equation to vanish. The last term, being the product of two small numbers, virtually vanishes as well. Under normal system conditions (non-fault), the zero-sequence voltage and thus the zero-sequence current is small. The k_A, k_B, and k_C value involve the difference between two capacitances that are factory matched, and so are also small. In addition, it is very likely that they are of varying signs, and thus their sum is doubly small. Thus the initial operating signal under normal operating conditions is seen to be virtually zero.

9.1.6.3 Sensitivity

Now consider the consequences of an element failure in a typical string, say string A1, making a small capacitance change in the C_{A1} capacitance. The effect on the operating signal can be calculated by taking the derivative of equation 9.63 with respect to C_{A1}.

In the general case, the derivative of the absolute value function is messy, but in our case where the initial value is zero, the derivative of the absolute function is simply the absolute value of the derivative of its argument. We assume here that the currents remain constant, which investigation has shown results in negligible error. The derivative is thus:

$$\begin{aligned} \frac{d}{dC_{A1}} I_{OP} &= \left| \frac{d}{dC_{A1}} \left(I_1(k_A + \hat{a}^2 k_B + \hat{a} k_C - k_1) + I_2(k_A + \hat{a}^2 k_B + \hat{a} k_C - k_1)^* + I_0(k_A + k_B + k_C) \right) \right| \\ &= \left| \frac{dk_A}{dC_{A1}} I_1 + \frac{dk_A}{dC_{A1}} I_2 + \frac{dk_A}{dC_{A1}} I_0 \right| \\ &= \left| \frac{dk_A}{dC_{A1}} I_A \right| \\ &= \left| \frac{(C_{A1} + C_{A2}) - (C_{A1} - C_{A2})}{(C_{A1} + C_{A2})^2} I_A \right| \\ &= \frac{2 C_{A2} I_A}{(C_{A1} + C_{A2})^2} \\ &\cong \frac{I_A}{2} \times \frac{1}{C_{A1}} \end{aligned} \quad \textbf{Eq. 9-65}$$

9

The final step assumes $C_{A1} \cong C_{A2}$ and replaces the phase current vector with its magnitude. This can be written as:

$$dI_{OP} = \frac{I_A}{2} \times \frac{dC_{A1}}{C_{A1}} \qquad \textbf{Eq. 9-66}$$

Alternately, we can say:

$$I_{OP}(pu) = \frac{I_A}{2} \times \Delta C(pu) \qquad \textbf{Eq. 9-67}$$

where $\Delta C(pu)$ represents the capacitance change as a per-unit value of the string capacitance, and $I_{OP}(pu)$ represents the operating signal resulting from the failure in per-unit of the nominal current of the differential source. I_A represents the phase A terminal current on the same base. When the system is normal (no fault), I_A can be taken as the capacitor bank's rated primary per-phase current I_{rated} converted to the differential source base. For example, $I_A = I_{rated} / I_{base}$, where I_{base} is again the differential CT primary current rating, or with system normal:

$$I_{OP}(pu) = \frac{I_{rated}}{2I_{base}} \times \Delta C(pu) \qquad \textbf{Eq. 9-68}$$

Note that under external fault conditions, sensitivity can be much different from the non-fault sensitivity.

9.1.6.4 Restraint

Severe system voltage unbalance, such as can occur during near-by bolted ground faults, can exacerbate measurement error, resulting in spurious operating signal. To prevent operation under these conditions, percent restraint supervision is applied using a restraint signal that is the magnitude of the zero-sequence current.

Typically, a few percent of slope is enough to ensure security of the function. The factor compensating for the inherent bank unbalance zeroes out the operating signal under relatively balanced bank currents. If the said currents contain a significant zero sequence component, the quality of compensation is lower, hence the need for the restraint, and this slope setting.

Figure 9-7: Neutral current unbalance restraint

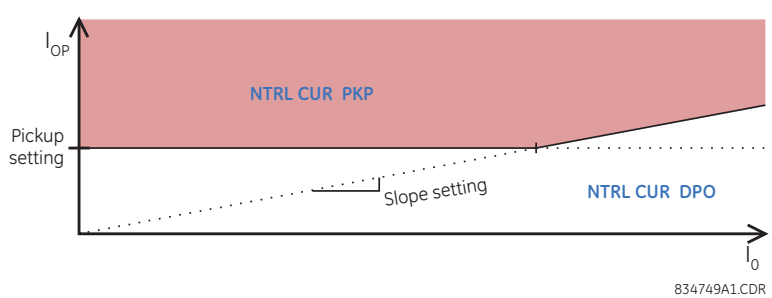

9.1.6.5 Auto-setting

As a convenient alternative to manually determining the unbalance k-factor settings, the relay can automatically calculate these settings from its own measurements while the capacitor is in-service, as described in the Commands and Targets chapter. The technique that the relay uses is to set the operate signal variable to zero in equation 9.54 and solve for the unbalance factor k_1 using the average of several successive measurements of the currents.

However, the assumption made here is that when the auto-set command is executed, the capacitor is in an acceptably balanced state, wherein the operating signal ought to be zero. Following the auto-set command, the protection measures changes from the state that existed at the time the auto-set command executed.

9.1.6.6 Application to ungrounded capacitor banks

The forgoing discussion of the neutral current balance protection applied to the ground configuration. When applied to ungrounded configurations, all of it applies, with the following exceptions:

- The phase voltages in equations 9.54 through 9.59 must have the neutral voltage V_X subtracted. However, as these voltages are eventually eliminated from the calculations, the outcome is unaffected.
- A low ratio CT can be used for ungrounded-wye configurations in place of a window type CT as there is no requirement to form the difference of the primary neutral currents
- Whereas with the grounded configuration $I_{DIF} = I_{N1} - I_{N2}$, with the ungrounded configuration $I_{DIF} = I_{N1} = -I_{N2}$. This results in the $-C_{A2}$, $-C_{B2}$, and $-C_{C2}$ terms disappearing from equations 9.58 through 9.65. This results in the following changes.

  Equation 9.64 becomes:

$$\begin{aligned} k_1 &= k_A + \hat{a}^2 k_B + \hat{a} k_C \\ &= \frac{C_{A1}}{C_{A1} + C_{A2}} + \hat{a}^2 \frac{C_{B1}}{C_{B1} + C_{B2}} + \hat{a} \frac{C_{C1}}{C_{C1} + C_{C2}} \end{aligned}$$

Eq. 9-69

  Equation 9.65 becomes:

$$\begin{aligned} \frac{d}{dC_{A1}} I_{OP} &= \left| \frac{(C_{A1} + C_{A2}) - C_{A1}}{(C_{A1} + C_{A2})^2} I_A \right| \\ &= \frac{C_{A2} I_A}{(C_{A1} + C_{A2})^2} \\ &\cong \frac{I_A}{4} \times \frac{1}{C_{A1}} \end{aligned}$$

Eq. 9-70

  Equation 9.67 becomes:

$$I_{OP}(pu) = \frac{I_A}{4} \times \Delta C(pu)$$

Eq. 9-71

  Equation 9.68 becomes:

$$I_{OP}(pu) = \frac{I_{rated}}{4 I_{base}} \times \Delta C(pu)$$

Eq. 9-72

  Note that in the ungrounded case, the operating signal is half of that for the grounded case.
- With the grounded configuration, the two banks must be nominally identical. With the ungrounded configuration the two banks need not be the identical though each ideally are balanced. In this situation, the base for $\Delta C(pu)$ is the capacitance of the string that has the element failure, so the larger bank has a lower sensitivity than the smaller bank.

C70 Capacitor Bank Protection and Control System

Chapter 10: Maintenance

This chapter outlines monitoring, maintenance, repair, storage, and disposal of the hardware and software.

10.1 Monitoring

Devices and data can be monitored.

10.1.1 Devices with Site Targets

To view an overview of devices:

1. Access the **Site Targets** item in the Online Window area, below the list of devices. It can take a few minutes for all devices to be read.
2. Acknowledge any messages for unaccessible devices. The Site Targets window opens when done.

Figure 10-1: Site Targets window

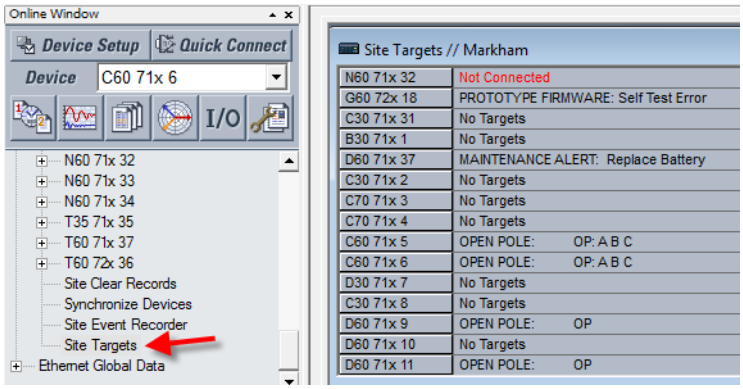

10.1.2 Data with Modbus Analyzer

Use the Modbus Analyzer under **Maintenance > Modbus Analyzer** to monitor the values of the UR device. Use the Modbus memory map addresses outlined in the UR Family Communications Guide for the entries.

The upper part of the window displays values. The lower part of the window is for factory service use.

The first row in the figure shows that Contact Output 1 operation is being monitored. Its Modbus address is CAFA. The actual value read from the device is 0, which means that it is off.

The second row in the figure shows the Contact Output 1 Name. It has a Modbus address of CAF0 and a default value of "Cont Op 1." None of **Selection** column settings render this value because they present the information based on numbering systems.

Figure 10-2: Modbus Analyzer used to monitor actual values on a UR

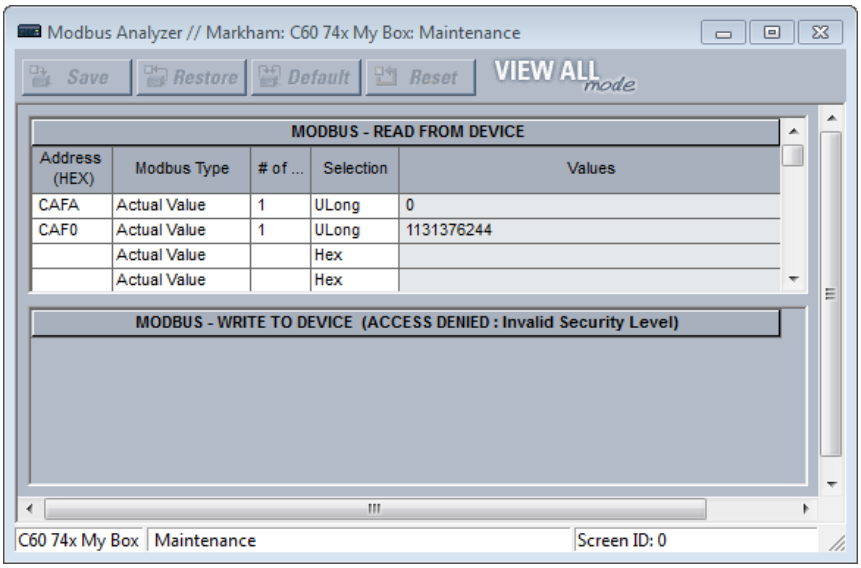

Address (HEX) — Modbus address in hexadecimal. See the Modbus memory map in the UR Family Communications Guide or in the web interface (enter IP address of UR device in a web browser). Convert the decimal address in the Modbus memory map to hexadecimal.

Modbus Type
Actual Value — To read the data in the UR device
Setting — To read a setting in the UR device
Coil — To read a command in the UR device

 # of — Element, input, or output to read. An example is 1 for Contact Output 1.

Selection (examples demonstrate various ways to represent 0)
Hex — A decimal numbering system based on 16 possible values, from 0 to 9 and A to F. An example is 0x0000.
Char — A single unicode character, such as C. An example is 0.
Int — A 32-bit number, either positive or negative. An example is 0.
UInt — Unsigned 32-bit integer, which means that it cannot be negative but can be twice as large as a signed integer. An example is 0.
Long — A 64-bit number, either positive or negative. An example is 0.
ULong — Unsigned 64-bit number, which means that it cannot be negative but can be twice as large as a signed 64-bit number. An example is 0.
Float — A numbering system with no fixed number of digits before or after the decimal point. An example is 0.000000.
Binary — A numbering system using 0 and 1. An example is 0000-0000-0000-0000.

Entries are not saved when closing the window.

10.2 General maintenance

The C70 requires minimal maintenance. As a microprocessor-based relay, its characteristics do not change over time. Expected service life is 20 years for UR devices manufactured June 2014 or later when applied in a controlled indoor environment and electrical conditions within specification.

While the C70 performs continual self-tests, it is recommended that maintenance be scheduled with other system maintenance. This maintenance can involve in-service, out-of-service, or unscheduled maintenance.

10.2.1 In-service maintenance

1. Visual verification of the analog values integrity, such as voltage and current (in comparison to other devices on the corresponding system).
2. Visual verification of active alarms, relay display messages, and LED indications.
3. LED test.
4. Visual inspection for any damage, corrosion, dust, or loose wires.
5. Event recorder file download with further events analysis.

10.2.2 Out-of-service maintenance

1. Check wiring connections for firmness.
2. Analog values (currents, voltages, RTDs, analog inputs) injection test and metering accuracy verification. Calibrated test equipment is required.
3. Protection elements setting verification (analog values injection or visual verification of setting file entries against relay settings schedule).
4. Contact inputs and outputs verification. This test can be conducted by direct change of state forcing or as part of the system functional testing.
5. Visual inspection for any damage, corrosion, or dust.
6. Event recorder file download with further events analysis.
7. LED Test and pushbutton continuity check.

NOTICE To avoid deterioration of electrolytic capacitors, power up units that are stored in a de-energized state once per year, for one hour continuously.

10.2.3 Unscheduled maintenance (system interruption)

View the event recorder and oscillography or fault report for correct operation of inputs, outputs, and elements.

10.3 Retrieve files

Data, oscillography, log, events, routing, ARP, and other files can be transferred using the EnerVista software to a computer or to a USB flash drive when using the graphical front panel. These files can be requested by technical support staff.

To retrieve a file using EnerVista software:

1. If the CyberSentry option is enabled, log in to the EnerVista software using the Administrator role.
2. In the Online Window area of EnerVista, access **Maintenance > Retrieve File**. The window opens.
3. Note the destination folder to which the file is to be saved at the top and change it if required. You can copy the path or open the folder for convenience at this time.
4. Select the file to download from the UR device.

5. Click the **Read File** button. The file is saved to the destination folder. The EnerVista window remains open to download additional files.

To retrieve a file using a USB drive:

1. Insert the USB drive into the bottom USB port on the graphical front panel. The page displays on the front panel.
2. Using the Up or Down pushbuttons on the front panel, select the file.
3. Press the **COPY** pushbutton. The files are copied from the C70 to the USB drive.

NOTICE Do not unplug the USB drive while copying is in progress, else the USB drive can be compromised.

4. When done, to exit unplug the USB drive or press the **ESCAPE** pushbutton.

10.3.1 CyberSentry security event files

CyberSentry security events are available in the following two files: SECURITY_EVENTS.CSV and SETTING_CHANGES.LOG.

10.3.1.1 Security events file

The figure shows the content for the SECURITY_EVENTS.CSV file.

Figure 10-3: Security events file

	A	B	C	D	E	F	G	H	I	J
1	FORMAT	EVENT_INFO_1	Event Number	Data/Time	Username	IP Address	Role	Activity Value	Change Method	
2		EVENT_INFO_1	71	Feb 08 2016 10:07:20.893820	Observer	10.14.127.1	0	14	5	
3		EVENT_INFO_1	72	Feb 08 2016 10:07:20.931321	Observer	10.14.127.1	0	15	5	
4		EVENT_INFO_1	73	Feb 08 2016 10:07:41.314660	Administrator	10.14.127.1	1	14	5	
5		EVENT_INFO_1	74	Feb 08 2016 10:07:54.383404	Administrator	10.14.127.1	1	10	5	
6		EVENT_INFO_1	75	Feb 08 2016 10:07:58.187574	Administrator	10.14.127.1	1	9	5	
7		EVENT_INFO_1	76	Feb 08 2016 10:08:01.991740	Administrator	10.14.127.1	1	6	5	
8		EVENT_INFO_1	77	Feb 08 2016 10:08:42.908413	Administrator	10.14.127.1	1	6	5	
9		EVENT_INFO_1	78	Feb 08 2016 10:08:43.493822	Administrator	10.14.127.1	1	6	5	
10		EVENT_INFO_1	79	Feb 08 2016 10:09:46.908404	Administrator	10.14.127.1	1	6	5	
11		EVENT_INFO_1	80	Feb 08 2016 10:14:44.958406	Keypad	0.0.0.0	3	14	1	

Time — Local time.

Activity — The actual security event.

1 = Authentication Failed
2 = User Lockout
3 = FW Upgrade
4 = FW Lock
5 = Settings Lock
6 = Settings Change, this can fill the entire event log. Hence it is supported by the already existing SETTINGS_CHANGE.LOG file. This event is not required.
7 = Clear Oscillography command
8 = Clear Data Logger command
9 = Clear Demand Records command
10 = Clear Energy command
11 = Reset Unauthorized Access
12 = Clear Teleprotection Counters
13 = Clear All Records
14 = Role Log out
15 = Role Log in

Change Method — Format code F229 for the settings control change method.

0 = None
1 = Keypad
2 = Front port
3 = COM1 (not used)
4 = COM2 (RS485)
5 = Ethernet

10.3.1.2 Setting changes file

The SETTING_CHANGES.LOG file stores all the setting changes. A total of 1024 events are stored in a circular buffer in non-volatile memory.

Figure 10-4: Setting changes file

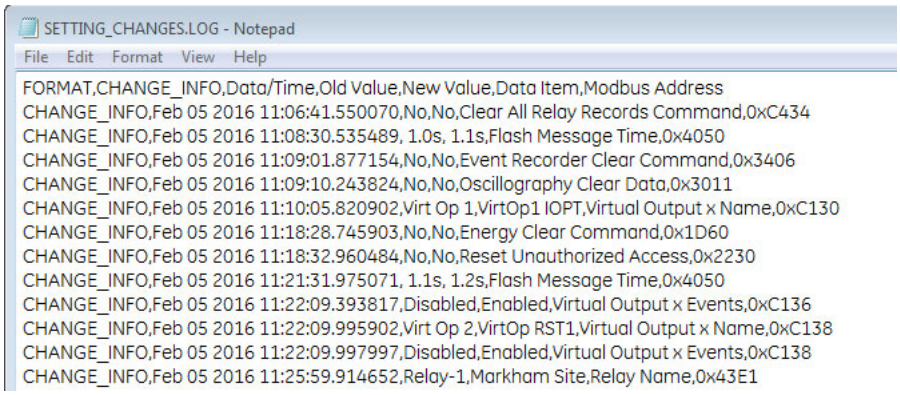

```
SETTING_CHANGES.LOG - Notepad
File  Edit  Format  View  Help
FORMAT,CHANGE_INFO,Data/Time,Old Value,New Value,Data Item,Modbus Address
CHANGE_INFO,Feb 05 2016 11:06:41.550070,No,No,Clear All Relay Records Command,0xC434
CHANGE_INFO,Feb 05 2016 11:08:30.535489, 1.0s, 1.1s,Flash Message Time,0x4050
CHANGE_INFO,Feb 05 2016 11:09:01.877154,No,No,Event Recorder Clear Command,0x3406
CHANGE_INFO,Feb 05 2016 11:09:10.243824,No,No,Oscillography Clear Data,0x3011
CHANGE_INFO,Feb 05 2016 11:10:05.820902,Virt Op 1,VirtOp1 IOPT,Virtual Output x Name,0xC130
CHANGE_INFO,Feb 05 2016 11:18:28.745903,No,No,Energy Clear Command,0x1D60
CHANGE_INFO,Feb 05 2016 11:18:32.960484,No,No,Reset Unauthorized Access,0x2230
CHANGE_INFO,Feb 05 2016 11:21:31.975071, 1.1s, 1.2s,Flash Message Time,0x4050
CHANGE_INFO,Feb 05 2016 11:22:09.393817,Disabled,Enabled,Virtual Output x Events,0xC136
CHANGE_INFO,Feb 05 2016 11:22:09.995902,Virt Op 2,VirtOp RST1,Virtual Output x Name,0xC138
CHANGE_INFO,Feb 05 2016 11:22:09.997997,Disabled,Enabled,Virtual Output x Events,0xC138
CHANGE_INFO,Feb 05 2016 11:25:59.914652,Relay-1,Markham Site,Relay Name,0x43E1
```

10.4 Convert device settings

Settings files can be upgraded or downgraded to other firmware versions. For example, version 7.4 settings can be upgraded to version 7.6.

Settings are reset to factory default upon conversion. For a graphical front panel, for example when upgrading from version 7.6 to 7.7, single-line diagrams and cells configured for the Metering Editor are defaulted, while other graphical front panel settings are retained.

When converting a settings file from version 7.20 or earlier to 7.70 or later, any IEC 61850 settings are defaulted, and Edition 2 is used.

When converting a settings file from version since 7.30 inclusive to 7.70 or later, any IEC 61850 settings are converted and Edition 2 is used.

When converting a settings file with IEC 61850 Edition 1 to version 7.80 or later with a non-HardFiber Process Bus Module (order code 85, 86, or 87), conversion does not take place and an error message displays. The Process Bus Module does not support Edition 1.

To convert settings:

1. If not already in the Offline Window area, right-click the online device in the EnerVista software and select the **Add Device to Offline Window** option. This copies the settings to the Offline Window area. Any message about file repair usually means that settings were missing in the original file and have been added with default values to the new file.
2. Make a copy of the settings file in the Offline Window area by right-clicking the file and selecting **Duplicate Device**. A copy of the file is made and the file name start with "Copy of." Optionally rename the file by right-clicking it and selecting the **Rename Device** option.
3. Convert the settings by right-clicking one of the files in the Offline Window and selecting the **Convert Device Settings** option.

   If the option does not display, click the **Admin > User Management** menu item and enable the **Update Info** check box for the user. Save.

Or if the option does not display, click the **Admin > User Management** menu item and enable the **Enable Security** check box. Save. Select the **Admin > User Login** menu item. Enter "Administrator" for the user and enter the password. (Contact GE Grid Solutions if you do not know the default password.)

GE recommends converting settings in firmware steps, for example when converting from 6.0 to 7.4x, convert first to 7.0 then 7.4 in order to follow embedded conversion rules and keep settings.

The settings convert and a report generates.

Figure 10-5: Upgrade settings

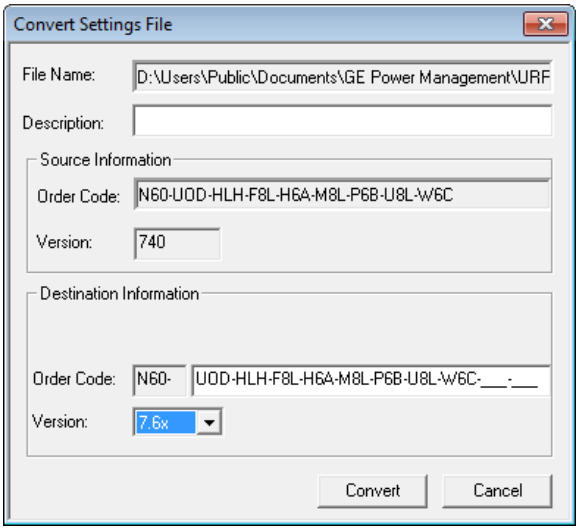

4. Review the conversion report. The values of all settings that have been defaulted during conversion are not listed in the conversion report; to find the value of a setting before conversion, inspect the device backup file made before conversion.

   In the example shown here, settings have been reset to factory defaults and several settings are new in firmware version 7.6 under **Settings > System Setup > Switches** and **Breakers**.

Figure 10-6: Conversion report

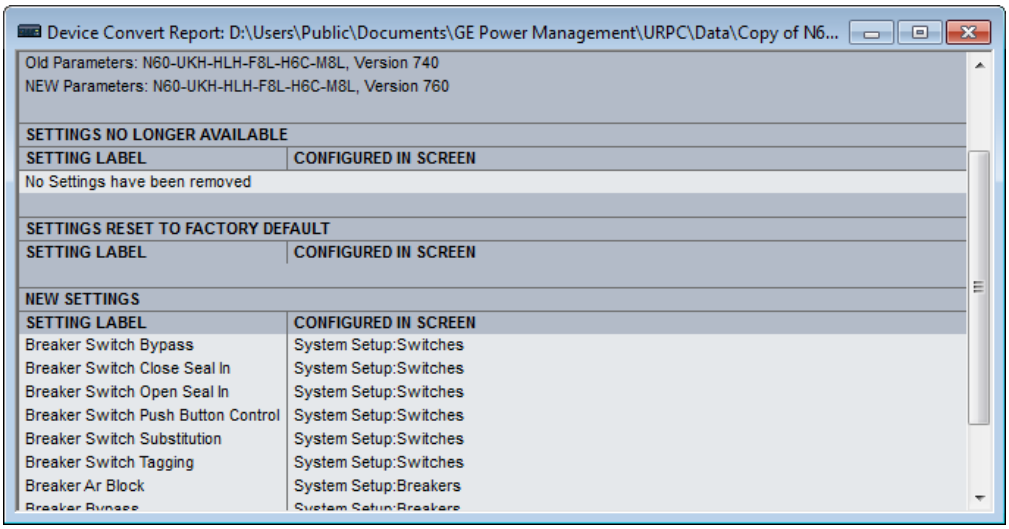

5. Change settings in the new file, for example by looking at the original file.
6. Write the converted file to the device, for example by dragging and dropping from the Offline Window to the Online Window.

7. Check settings and operation.

10.5 Copy settings to other device

Settings from one C70 device can be copied to another C70 device for rapid deployment. The order codes and IEC 61850 edition must match. See the Settings File section at the beginning of the Interfaces chapter for a list of settings not deployed.

1. Right-click the device in the Online window and select the **Add Device to Offline Window** option. A window opens.
2. Check the file path and name the file, then click the **Receive** button. An example is to save the files in D:\Users\Public\Public Documents\GE Power Management\URPC\Data\ and to name the source device C70_Deployment. At the prompt, confirm the action. The settings are saved in .cid, .icd, and .urs files, and the entry displays in the Offline window area.
3. Right-click the device in the Offline window area and select the **Duplicate Device** option. The device is copied with a prefix of "Copy of." Multiple duplicates results in files being named "Copy of Copy of" for example, which can be avoided by deleting the folder copies from the path shown on mouse-over.
4. Right-click the copied device and rename it.
5. Right-click the copied device and select the **Edit Device Properties** option. Make the changes for the new device.
6. Send the file to new device by dragging and dropping it into the Online Window area. Or right-click and select the **Write Settings to Device** option.
7. Update the remaining settings, such as IP address.

10.6 Compare settings

Settings are comparable against default values and between two UR devices.

Some of the IEC 61850 settings use floating point data, which guarantees accurate representation of real numbers up to seven digits. Numbers with more than seven digits are approximated within a certain precision. This can result in differences between what is entered and what is saved, and for example results in differences shown on a settings comparison report.

When comparing two settings files with the graphical front panel, all graphical front panel features are compared except for the single-line diagrams.

10.6.1 Compare against defaults

1. Right-click the device in the Offline Window area and select **Compare Settings With Defaults**. The file generates and the number of differences displays.
2. To save the report, click **File > Save As**, select the TXT, PDF, or CSV format from the drop-down list, and enter a name for the file.

In the figure, the first entry is from the device, while the second is the default value.

Figure 10-7: Device settings compared with default values

```
137,  File1 , Trip Bus Input, 1__1__3, 1 (ON)
138,  File2 , Trip Bus Input, 1__1__3, 0 (OFF)
139,  File1 , Virtual Output Events, 1__64__1, 0 (Disabled)
140,  File2 , Virtual Output Events, 1__64__1, 1 (Enabled)
141,  File1 , Virtual Output Name, 1__64__1, Virt Op 64
142,  File2 , Virtual Output Name, 1__64__1, Osc Trigger
```

10.6.2 Compare two devices

Preferences are set under **File > Preferences** as follows:

- **Comparison Report: Sequential File 1, File 2 Layout** — When disabled (default), the report shows only what differs, as shown in the previous figure. When enabled, the report indicates differences by device.

Figure 10-8: Device settings compared between two devices, displayed sequentially

```
1,  File2 , Existing 7.40 IEC61850 settings removed., ____, New IEC61850 settings added with default values.
2,  File2 , Bkr Phase A Open, 1__1__1, 0 (OFF)
3,  File2 , Bkr Phase B Open, 1__1__1, 0 (OFF)
4,  File2 , Bkr Phase C Open, 1__1__1, 0 (OFF)
5,  File2 , Breaker Restrike Block, 1__1__1, 0 (OFF)
6,  File2 , Breaker Restrike Block, 1__2__1, 0 (OFF)
7,  File2 , Breaker Restrike Brk Open, 1__1__1, 0 (OFF)
8,  File2 , Breaker Restrike Brk Open, 1__2__1, 0 (OFF)
9,  File2 , Breaker Restrike Cls Cmd, 1__1__1, 0 (OFF)
10  File2 , Breaker Restrike Cls Cmd, 1__2__1, 0 (OFF)
```

There are two ways to compare devices: devices in the Offline area or between Online and Offline devices.

To compare settings of two devices in the Offline Window area:

1. Right-click a first device in the Offline Window area and select **Compare Two Devices**.
2. In the window that opens, select a second device and click the **Receive** button. The file generates and the number of differences displays.
3. To save the report, click **File > Save As**, select the TXT, PDF, or CSV format from the drop-down list, and enter a name for the file.

To compare settings between Online and Offline devices:

1. Right-click a device in the Online Window area and select **Compare with Device**.
2. In the window that opens, enter a path/file name at the bottom o f the window.
3. Select the second device.
4. Click the **OK** button. The file generates, and the differences are highlighted in red, which is for the first device.

10.7 Back up and restore settings

Back up a copy of the in-service settings for each commissioned UR device, so as to revert to the commissioned settings after inadvertent, unauthorized, or temporary setting changes are made, after the settings defaulted due to firmware upgrade, or when the device has to be replaced. This section describes how to backup settings to a file and how to use that file to restore the settings to the original relay or to a replacement relay.

For reference, settings can saved with **Online > Print Device Information** and **Online > Export Device Information**. They cannot be restored using these options.

10.7.1 Back up settings

The following file types can be saved:

- URS — UR settings file — When the IEC 61850 option is not present
- IID — Instantiated IED capability description file — Actual settings on UR
- ICD — IED Capability Description file — Default settings on UR
- CID — Configured IED description file — Settings sent to the UR (may or may not contain the present settings)

UR device settings can be saved in a backup URS file using the EnerVista UR Setup software. The URS file is the standard UR settings file. For an introduction to settings files in the URS format, see the beginning of the Interfaces chapter.

When the IEC 61850 option is present, the settings can be saved alternatively in a backup IID file either using the EnerVista UR Setup software in online mode or by using any of the supported file transfer protocols. The IID file is one of several IEC 61850 Substation Configuration Language (SCL) file types; see the IEC 61850 chapter in the UR Series Communications Guide for an introduction to SCL.

"TBD" displays when a setting in a modeled element is configured with a non-modeled operand. For example, Phase IOC is modeled in a firmware release, while the LED operands are not modeled. If the block setting of the Phase IOC is configured with LED operands, its displays as TBD in IID and CID files, the web interface, or in an MMS client.

The options that display in the EnerVista software when right-clicking depend on device options.

Preferences are set in the **File > Preferences > IEC 61850** menu. There are two options as follows:

- **Preserve custom attributes when importing SCD/CID files** — Applies to the **Add Device to Offline Window** option. When enabled, the IID file also is to be copied to the computer. The IID file that is retrieved from the relay is therefore assumed to be in synchronization with the resulting .urs file, and in fact in this situation the IID file on the computer is a copy of the IID file that was read from the online device. When disabled, the IID file on the computer is to be left unchanged. The location of the IID file is C:\ProgramData\GE Power Management\urpc\Offline, for example.
- **Do not update IID file when updating SCL files** — When enabled (default), an IID file is not to be created on the computer and if one is already present there, it is neither removed nor updated. Have this option enabled when you want to keep the IID file from the UR device instead of from another tool. The location of the file is C:\ProgramData\GE Power Management\urpc\Offline, for example.

An Environment backup stores a list of sites and devices in the Online and Offline Window areas. Settings files are not contained within the environment file. If a settings file is moved, renamed, or deleted after the backup, it is removed from the Offline Window during the restore.

To save a settings file in the URS format in EnerVista Online Window:

1. In EnerVista, connect to the device in the Online Window area.
2. Right-click the device name in the Online Window area and select **Add Device to Offline Window**. A window opens.
3. Select or enter a file name and location, and click the **Receive** button. A .urs file is created in the Offline Window area.

To create a new settings file in the URS format in EnerVista Offline Window:

1. In EnerVista, right-click in the Offline Window area and select **New Device**. A window opens.
2. Change the file name at the end of the **Path** field, keeping the .urs extension.
3. From the **Associate File with Device** drop-down list, select the UR device. Other fields complete automatically. Otherwise, when you do not select a device from the drop-down list, all fields need to be completed manually and only devices that match the entered order code and version display in the list.
4. The **Serial # Lock** field is the serial number of the intended device. It ensures that the settings file is sent only to the specific relay that matches the serial number.
5. Click the **OK** button to create the .urs file in the Offline Window area.

To save settings in the IID format in EnerVista Online Window:

1. In EnerVista, connect to the device in the Online Window area.
2. Right-click the device name in the Online Window area and select **Read IID File**. The option is not present when the device does not have the IEC 61850 option. A window opens when successful.
3. Select or enter a file name and location, and click the **Receive** button. A .iid file is created.

To save settings in the IID format in EnerVista Offline Window:

1. In EnerVista, right-click the device in the Offline Window area.
2. Select the **Create IID File** option for firmware below 7.3. The option is not always available. Select the **Save As** option for firmware 7.3 and later, and select the IID option from drop-down list.

No file is generated. The IID file on the computer is copied to the location specified.

3. If the **Do not update IID file when updating SCL files** preference is enabled under **File > Preferences > IEC 61850**, then a message displays to that effect. This means that there is no IID file available on the computer to be copied, so a new one is generated.

To save settings in the IID format using TFTP:

1. On a computer on the same subnetwork as the UR device, open a command window.
2. Enter

```
TFTP <IP address> GET ur.iid <destination>
```

where

<IP address> is the IP address of the UR device
ur.iid is the internal name of the IID file in the UR device
<destination> is the path and file name of the IID file. If omitted, the file is saved as ur.iid in the command window default directory.

An example is

```
TFTP 192.168.1.101 GET ur.iid Feeder1.iid
```

To save settings in the ICD format in EnerVista Online Window:

1. In EnerVista, right-click the device in the Online Window area.
2. Select the **Read ICD File** option. A window opens.
3. Enter a path/name for the file, and click the **Save** button.

To save settings in the ICD format in EnerVista Offline Window:

1. In EnerVista, right-click the device in the Offline Window area.
2. Select the **Create ICD File** option. Or select the **Save As** option, and select the ICD option from drop-down list.

   You can be prompted to specify if the file is for firmware version 7.12 or later.

   The file is saved to the location specified.

To save settings in the CID format in EnerVista Online Window:

1. In EnerVista, right-click the device in the Online Window area.
2. Select the **Read ICD File** option. A window opens.
3. Enter a path/name for the file, and click the **Save** button.

To save settings in the CID format in EnerVista Offline Window:

1. In EnerVista, right-click the device in the Offline Window area.
2. Select the **Save As** option, which displays for firmware 7.3 and later, and select the CID option from the drop-down list.

   The file is copied from the computer to the location specified.

To save list of sites and devices with an Environment backup:

1. In EnerVista, click **File > Environment > Backup**. A window opens.
2. Name and save the .ENV file.

10.7.2 Restore settings

UR device settings can be restored to the values they were at when a URS backup file was created using the EnerVista UR Setup software. When the IEC 61850 option is present, the settings can alternatively be to the values they were at when an IID type backup was created either using the EnerVista UR Setup software in online mode or by using any of the supported file transfer protocols. Note that TFTP cannot be used here, as TFTP "put" mode is disabled for security reasons.

To restore completely, a few settings need to be entered manually either via EnerVista UR Setup or via the UR device front panel. If the restore operation is to be via Ethernet, first the UR device must have its IP address settings entered via the front panel. These are located at **SETTINGS ⇨ PRODUCT SETUP ⇨⇩ COMMUNICATIONS ⇨⇩ NETWORK 1(3)** and **SETTINGS ⇨ PRODUCT SETUP ⇨⇩ COMMUNICATIONS ⇨⇩ IPv4 ROUTE TABLE 1(6) ⇨ DEFAULT IPv4 ROUTE ⇨ GATEWAY ADDRESS**.

When importing a file, it cannot have a blank numeric value. All numeric values must be non-blank, otherwise the file is rejected.

URS and IID procedures are outlined here.

To restore settings from a URS file:

1. In EnerVista, connect to the device in the Online Window area.
2. Right-click the .urs file in the Offline Window area and select **Add Device from File** to locate a file, and/or drag-and-drop the file from the Offline Window area to the device in the Online Window area.

Figure 10-9: Restoring a URS settings file

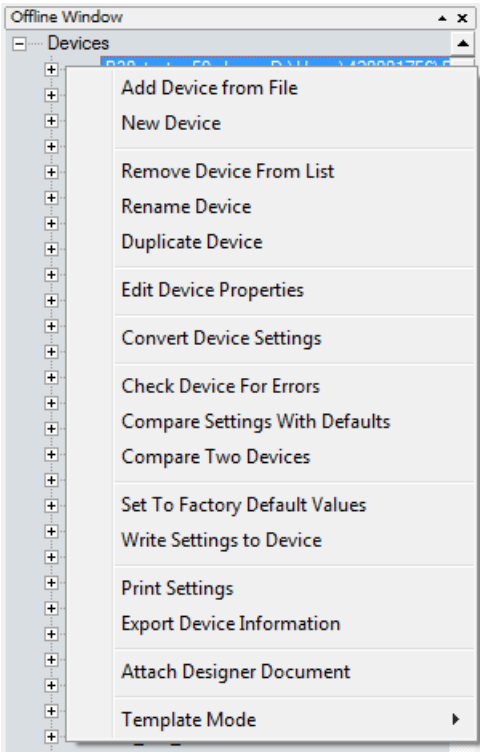

3. Two prompts are possible, first that the URS file does not include the complete IEC 61850 configuration and that it needs to be recreated if you continue. This means that the URS file is from UR version 7.30 or higher, has the IEC 61850 software option in the order code, but any IEC 61850 content will be compromised and will need to be configured.

   Second, a message can display that the URS file is part of a device folder and to use the device's CID file. This means that the URS file is from UR version 7.3 or higher, has the IEC 61850 software option in the order code, and is part of the device folder. The user is trying to add a URS file from inside a device's folder. Instead, the user needs to use the CID file from the device folder.

   These messages display because the roles of the protection engineer and network engineer can be separate. The former can require a URS file, while the latter can require stored Modbus settings and protection schemes.

4. Manually copy the remaining settings, outlined as follows.

To restore settings from an IID file using EnerVista software:

1. In Windows, make a copy of the .iid backup file, and change the extension to .cid on the new copy.
2. In the Online Window area of the UR EnerVista Setup software, connect to the device to establish communication.
3. In the Offline Window area, right-click **Devices** and select **Import Devices from SCD**.

Figure 10-10: Importing an SCD or CID file

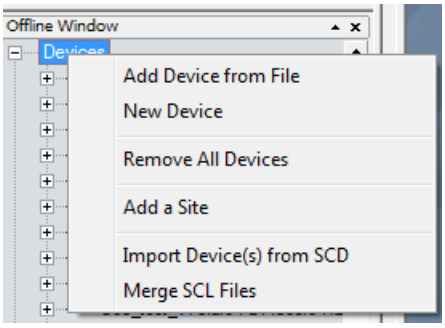

4. Navigate to and select the file with .cid extension. When prompted, enter a file name to give to an intermediate URS file. The URS file is added to the Offline Window area.
5. Drag the imported file in the Offline Window to the device in the Online Window. Note that the **RELAY SETTINGS** value also is written to a device, and the accepting relay is put into "Programmed" or "Not Programmed" mode as configured in the offline file.
6. Manually copy the remaining settings, outlined as follows.

To restore settings from an IID using SFTP:

1. Close EnerVista UR Setup software.
2. In Windows, make a copy of the .iid backup file, and change the extension to .cid on the new copy.
3. On a computer on the same subnetwork as the UR device, open an SFTP client application, such as WinSCP. Note that TFTP cannot be used here.
4. Use the device's IP address as the host name.
5. If the device has the CyberSentry option, use the User Name of "Administrator" or "Engineer," and the password programmed for the selected role. The default password is "ChangeMe1#" (without quotation marks). Log in to the device.
6. If the device does not have the CyberSentry option, use the User Name of "Setting," and the password programmed for the Setting role. The default password is "ChangeMe1#" (without quotation marks). Log in to the device.
7. Upload the backup file copy with the .cid extension. WinSCP uses drag-and-drop or copy-and-paste for this file transfer.
8. Manually copy the remaining settings, outlined as follows.

To manually copy remaining settings:

1. Settings listed in section 4.1.2 Settings Files are not transferred to the UR device with settings files. Enter them manually either via the front panel or via EnerVista UR Setup software. The values that these settings had at the time the backup was created are contained within the backup file, accessed through EnerVista UR Setup software.

To restore the list of sites and devices from an Environment backup:

1. In EnerVista, click **File > Environment > Restore**. A window opens.

2. Select the .ENV file to restore.

10.8 Upgrade software

In general, the latest releases of the EnerVista software can be used with all firmware versions. For example, EnerVista software released for UR 7.4 can be used to access multiple UR devices that have version 7.4x, 7.2x, and 6.0x firmware installed.

Existing installations do not need to be uninstalled before upgrade.

You can also downgrade the software; use the same procedure.

To upgrade the EnerVista software:

1. If a beta version of the EnerVista UR Setup software is installed, uninstall it, for example using the Windows Control Panel.
2. For Windows 10, disconnect any USB cable to the C70, else the UR USB drivers do no install correctly.
3. Download the latest EnerVista software and/or firmware from http://www.gegridsolutions.com/app/ViewFiles.aspx?prod=urfamily&type=7
4. Double-click the file and complete the wizard. The software installs.
5. Access the software and check the version number under **Help > About**. If the new version does not display, try uninstalling the software and reinstalling the new versions.
6. For Windows 10, to finish installing the UR USB driver, open **Device Manager > Ports**, then plug in the USB cable (to connect the relay and computer). A new port starting with "GE Virtual Serial Port" is available. If available, click the **OK** button to complete the installation.

   If not available, uninstall the existing GE USB driver in the **Device Manager > Ports**. (Right-click and "Uninstall.")

   When complete, unplug and re-plug the USB cable connecting the UR device. The "GE Virtual Serial Port" driver is now available.

A message can display about a version not being supported. An example is when upgrading from version 7.12K to 7.4x. The 7.12K entry is removed from the Offline Window area.

A message can display in the EnerVista software upon launch that "a device from the environment was not recognized." This means that a device is online and its firmware version conflicts with the software version. In the example shown, a C60 with firmware version 7.5x is online, but the software version is 7.3x. Updating removed incompatible files and changed the device to version 7.3x, after which you need to make the order codes consistent as outlined next.

Figure 10-11: Mismatch in order code between software and device

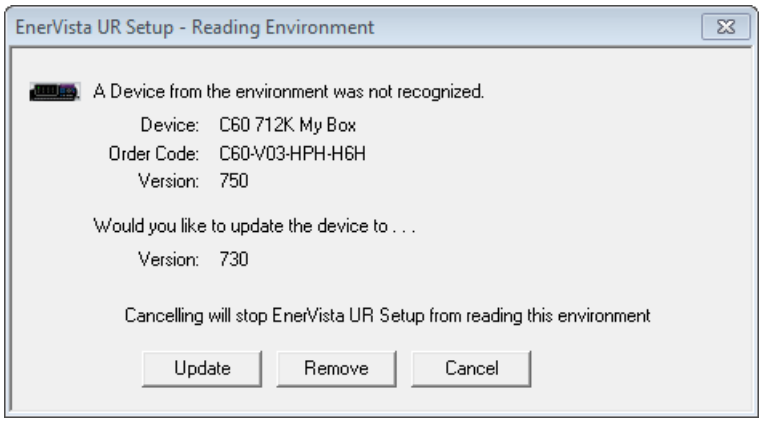

To make the order codes consistent:

1. In EnerVista, click the **Device Setup** button. The window opens.
2. Expand the entry for the UR device.

3. Click the **Read Order Code** button. The order code and version of the device are populated to the software.
4. Click the **OK** button to save the change.

10.9 Upgrade firmware

If upgrading both EnerVista software and C70 firmware, upgrade the software first.

The firmware of the C70 device can be upgraded, locally or remotely, using the EnerVista software.

Upgrades are possible for the same release (such as 7.01 to 7.02) and from one firmware version to another (such as 7.2 to 7.3). When upgrading to another firmware version, check the release notes on the GE Multilin website for compatibility.

If you are upgrading from version 7.0 or 7.1 to 7.2 or later, some CPU modules require a new boot version. Update this first.

Address equipment mismatch error before upgrade. For example, if you have a basic front panel attached and the order code in the device is for a graphical front panel, the upgrade only works with a graphical front panel.

You can also downgrade firmware; use the same procedure.

Upgrading the firmware takes the relay out of service. At the end of the upgrade, the relay restores the "In Service" state that existed before the upgrade.

To upgrade the firmware using EnerVista software:

1. If required, download the boot file and/or firmware from http://www.gegridsolutions.com/app/ViewFiles.aspx?prod=urfamily&type=7
   The firmware is a .SFD file. The boot file is a .bin file.

1. Navigate to **Settings > Product Setup > Security** and ensure that the **Remote Setting Authorized** and **Local Setting Authorized** settings are "ON." On the front panel of the device, the path is **SETTINGS ⇨ PRODUCT SETUP ⇨ SECURITY ⇨⇩ DUAL PERMISSION SECURITY ACCESS**.

   If using CyberSentry security, also ensure that the relay and firmware are not locked under the **Settings > Product Setup > Security > Supervisory** settings. A Supervisor role is required for these settings.
2. In EnerVista, back up the device settings by right-clicking the device and selecting **Add Device to Offline Window**. In the window that displays, select an existing file to overwrite, or enter a name for a new settings file and optionally a location for the new file. Click the **Receive** button to start the backup.

   If an "Incompatible device order codes or versions" message displays, it means that you are trying to overwrite a file for another product. You access the **Convert Device Settings** option by right-clicking the file in the **Offline Window** area at the lower left. GE recommends converting settings in firmware steps, for example when converting from 6.0 to 7.4x, convert first to 7.0 then 7.4 in order to follow embedded conversion rules and keep settings. Note that the values of all settings that have been defaulted during conversion are not listed in the conversion report; to find the value of a setting before conversion, inspect the device backups made before conversion.
3. In EnerVista, navigate to **Maintenance > Update Firmware**.

   First select the boot file if applicable, locating the .bin file, and proceed. Restart the device, the EnerVista software, and refresh the order code in EnerVista under the **Device Setup** button.

   To update the firmware, click **Maintenance > Update Firmware**, select the firmware update by locating the .SFD file, and proceed with the update.

   When asked if upgrading over the Internet, the difference is the flash memory buffer size each time the software sends data to the relay. Yes means that the flash memory buffer size is 256 bytes. No means that it is 1024 bytes, which is faster.

   If a warning message displays about the firmware not being supported by the EnerVista software, it means that the firmware is a later version than the software. Upgrade the software to the same or later version as the firmware, then try again.

   If an "Unable to put relay in flash mode" message displays, set the **Settings > Product Setup > Security > Dual Permission Security Access > Remote Setting Authorized** and **Local Setting Authorized** settings to "ON" and try again.

When the update is finished, the relay restarts automatically. The upgrade process takes about 20 minutes when using a graphical front panel because of writing to the front panel.

4. Restart the EnerVista software, and refresh the order code in EnerVista under the **Device Setup** button.
5. Verify the boot and firmware version while the device is starting up or in EnerVista under **Actual Values > Product Info > Firmware Revisions**. The boot revision is not the same as the firmware revision, and the firmware revision reflects the UR release, for example firmware revision 7.40 is UR release 7.40.
6. Set the device to "programmed" under **Settings > Product Setup > Installation**. A self-test error displays on the device until this is done.
7. If you changed the **Remote Setting Authorized**, the **Local Setting Authorized** settings, or relay lock settings, return them to their previous settings.
8. To apply any previously saved settings, right-click the saved settings file in the **Offline Window** area and select **Write to Device**. Optionally convert the saved settings to the new firmware version before writing to the device by right-clicking and selecting **Convert Device Settings**.

NOTE

The field-programmable gate array (FPGA) can be upgraded under **Maintenance > Update FPGA** when the device is connected via serial cable and the firmware revision is 7.0 or higher.

Modbus addresses assigned to firmware modules, features, settings, and corresponding data items (that is, default values, minimum/maximum values, data type, and item size) can change slightly from version to version of firmware. The addresses are rearranged when new features are added or existing features are enhanced or modified. The EEPROM DATA ERROR message displayed after upgrading/downgrading the firmware is a resettable, self-test message intended to inform users that the Modbus addresses have changed with the upgraded firmware. This message does not signal any problems when appearing after firmware upgrades.

10.10 Replace front panel

This section outlines how to install a graphical front panel.

A graphical front panel with a seven-inch (17.8 cm) color display and USB port is available for horizontal units. When purchased separately as a retrofit for an existing relay, there is one kit for an enhanced front panel replacement and another kit for the basic front panel replacement, with mounting brackets differing between the two kits. A kit includes the graphical front panel, mounting brackets, and screws. The graphical front panel requires CPU module type W or module type T, U, or V (newer type that has two connector slots on the front of the module--the second is difficult to see), upgrades of software and firmware, then a settings update to recognize the graphical front panel.

The following procedures are outlined:

- Remove front panel
- Install graphical front panel
- Replace CPU module
- Upgrade software and firmware, then update setting

WARNING **Withdraw or insert a module only when control power has been removed from the unit, and be sure to insert only the correct module type into a slot, else personal injury, damage to the unit or connected equipment, or undesired operation can result.**

NOTICE To avoid damage to the equipment, use proper electrostatic discharge protection (for example, a static strap) when coming in contact with modules while the relay is energized.

The following procedure can be used for the Rev. 1 and Rev. 2 enhanced front panels, with Rev. 1 is documented here. The Rev. 2 enhanced horizontal front panel introduced starting November 2017 uses a screw to close it and internal hinge screws as per the graphical front panel.

To remove an enhanced or basic front panel:

1. In the EnerVista software or on the front panel, access **Settings > Product Setup > Communications > Network** and

record the IP address and subnet mask of the port(s) being used. Record the gateway address under **Default IPv4 Route**.

2. Turn off power to the unit. Hot-swapping of the front panel is not supported.
3. For an enhanced front panel, loosen the thumb screw and open slightly the front panel.

   For a basic front panel, lift up the black plastic latch on the right side of the front panel and open slightly the front panel.

Figure 10-12: Loosen thumb screw on enhanced front panel to open

Figure 10-13: Lift latch on basic front panel to open

4. With a Phillips screwdriver, unscrew and remove the mounting bracket on the right side of the unit. The bracket for the enhanced front panel looks similar to that for the graphical front panel, but they are not the same.

Figure 10-14: Remove enhanced front panel mounting bracket on right side

Figure 10-15: Remove basic front panel mounting bracket on right side

5. Open the front panel. Unplug or unscrew the grey ground cable from the front panel. Unplug the RJ45 connector from the CPU module in the second slot on the left.

Figure 10-16: Disconnected ground cable and CPU connector

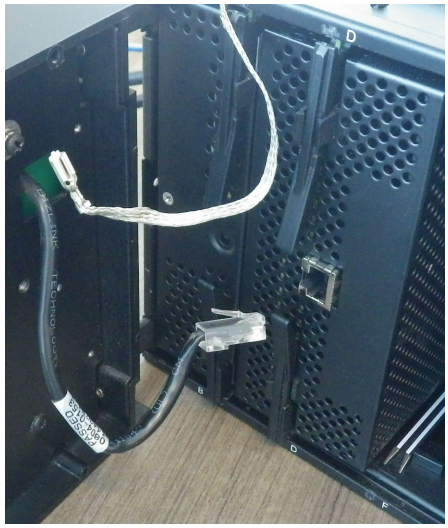

6. Unscrew and remove the mounting bracket with the front panel from the left side.

Figure 10-17: Unscrew enhanced front panel mounting bracket on left side

Figure 10-18: Unscrew basic front panel mounting bracket on left side (note riveted hinges with red arrows)

The riveted hinges remain for the basic front panel.

The front panel has been removed.

To install the graphical front panel:

1. With power to the unit off, screw the left mounting bracket to the outside of the relay. The power supply module can remain in the first slot.

Figure 10-19: Attach mounting bracket on left side (enhanced front panel shown; no power supply module in first slot)

2. Screw the right mounting bracket to the right side of the relay.

Figure 10-20: Attach mounting bracket to relay on right side

3. Attach the graphical front panel hinge to the left mounting bracket using the nuts provided.

Figure 10-21: Attach to left mounting bracket inside relay

4. Close the front panel without tightening the screw to the mounting bracket.
5. Optionally remove the protective plastic film on the graphical front panel. It is normally peeled off, but also can be left on.

   The graphical front panel has been installed but not connected.

To replace the CPU module:

1. With power to the unit off, at the back of the CPU module in the second slot, disconnect any cables. Remove the silver SFP connector(s) from the CPU module, and keep it handy. Then remove the CPU module by sliding the module out from the front of the relay. (See the next section for instructions.)

Figure 10-22: Remove silver SFP connector (shown here under LK1 label)

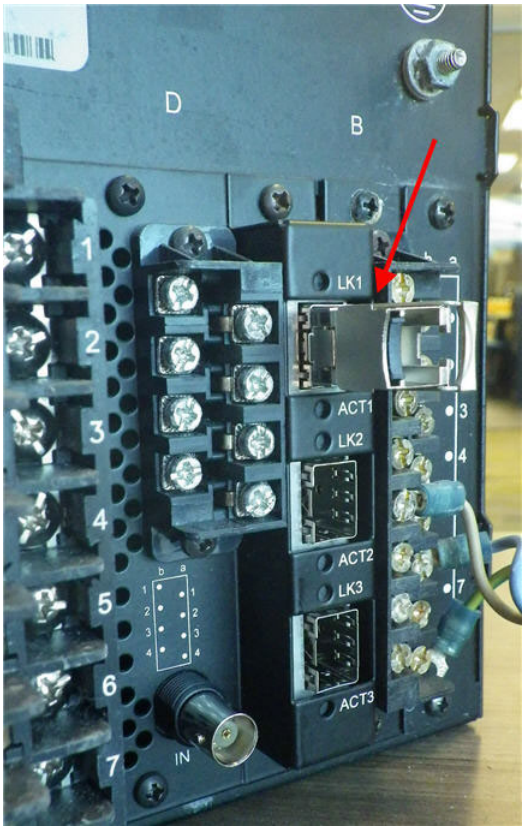

2. At the front of the relay, insert the new CPU module in the second slot. The new CPU has two connection slots on the front. Ensure that the RS485 connector and the black cover plate are not on the back of the CPU module before sliding the module into the front of the relay.

Figure 10-23: Rear of a CPU module before insertion without RS485 connector or cover plate

3. Once the module is in place, connect the graphical front panel to the CPU module (ground and upper connector) and close the front panel. There are two connections possible on the front of the CPU module: upper for the graphical front panel and lower for the enhanced and basic front panels. The upper connection is black with holes, similar to the cover, so it is difficult to see.

Figure 10-24: Connect graphical front panel to top connection on CPU module

4. Tighten the embedded screw on the right side of the graphical front panel to the mounting bracket.

Figure 10-25: Screw to attach graphical front panel to mounting bracket

5. At the back of the CPU module, attach the new black cover plate to the back of the relay, then connect the new RS485 connector.

   Insert the silver SFP connector(s) at the back of the CPU module, then connect any Ethernet connection(s).

6. Power up the relay. If the graphical front panel does not power up immediately, disconnect power, open the front

panel, then check that the graphical front panel is plugged into the upper connection, not the lower silver connection on the CPU module.

To upgrade software and firmware.

1. Upgrade the EnerVista software as outlined in this chapter.
2. Input the IP address and subnet mask of the relay on the front panel under **Settings > Product Setup > Communications > Network**, and input the gateway address under **Default IPv4 Route**.
3. Upgrade the firmware in the EnerVista software as outlined in this chapter, for example under **Maintenance > Update Firmware**.

   If you see error messages after the upgrade, disconnect power to the relay and shut down the software, then start both again. If you see a flashing message about front panel communications trouble, check the connection of the graphical front panel to the CPU module.
4. In the EnerVista software, click the **Device Setup** button and refresh the order code for the device.
5. Set the relay to Programmed mode under **Settings > Product Setup > Installation**.
6. Update the EnerVista software to recognize the graphical front panel under **Maintenance > Change Front Panel**. This setting does not display for units already with a graphical front panel.

If an equipment mismatch error displays on the front panel, it can mean that the order code on the device needs to be updated to the new front panel.

10.11 Replace module

This section outlines how to replace a module.

WARNING **Withdraw or insert a module only when control power has been removed from the unit, and be sure to insert only the correct module type into a slot, else personal injury, damage to the unit or connected equipment, or undesired operation can result.**

NOTICE To avoid damage to the equipment, use proper electrostatic discharge protection (for example, a static strap) when coming in contact with modules while the relay is energized.

The relay, being modular in design, allows for the withdrawal and insertion of modules. Replace modules only with like modules in their original factory configured slots.

Two procedures follow: replace a module with the same module, and upgrade a module.

To replace a module with the same module:

1. Open the enhanced front panel to the left once the thumb screw has been removed. This allows for easy access of the modules for withdrawal. The new wide-angle hinge assembly in the enhanced front panel opens completely and allows easy access to all modules in the C70.

Figure 10-26: Modules inside relay with front cover open (enhanced front panel)

842812A1.CDR

The basic front panel can be opened to the left once the black plastic sliding latch on the right side has been pushed up, as shown below.

Figure 10-27: Removing module (basic front panel)

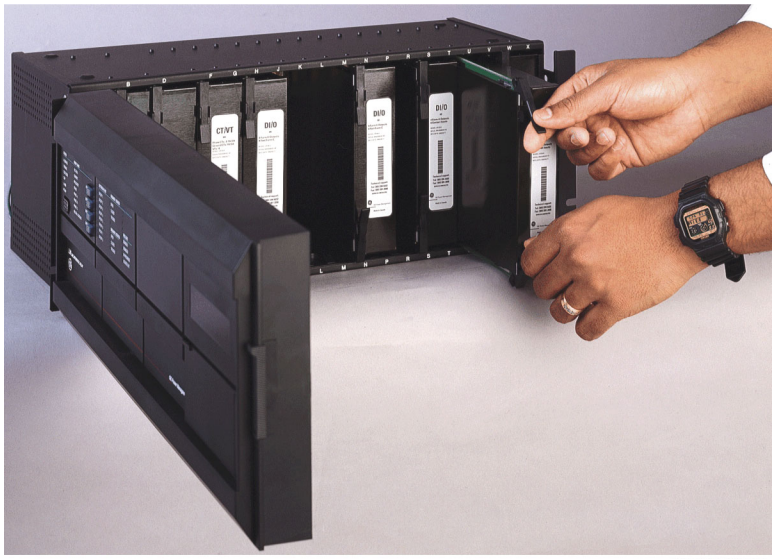

842760A1.CDR

2. With power to the unit off, disconnect individually the connections at the front and back of the module before removing the module from the chassis.

   For any Process Bus Module in slot H for use with a HardFiber Brick, also remove the two screws at the back that attach the module to the chassis.

3. To properly remove a module, pull simultaneously the ejector/inserter clips, located at the top and bottom of the module. Record the original location of the module to ensure that the same or replacement module is inserted into the correct slot. While modules with current input provide automatic shorting of external CT circuits, for CT/VT modules it is recommended to short/isolate external circuits accordingly for maximum safety.
4. To properly insert a module, ensure that the correct module type is inserted into the correct slot position. The ejector/inserter clips located at the top and at the bottom of each module must be in the disengaged position as the module is smoothly inserted into the slot. Once the clips have cleared the raised edge of the chassis, engage the clips simultaneously. When the clips have locked into position, the module is fully inserted.

NOTE

When adding a module (versus replacing a module), check that settings have not changed. Depending on the module, settings can reset to default values.

An upgrade example is replacing the CPU module with a more recent one, such as swapping 9G/9H/9N with 9T/9U/9V/9W. A power supply module upgrade does not affect an order code.

To upgrade a module:

1. Back up settings by sending the device to the Offline Window area. Convert the settings to the new order code by right-clicking in the Offline Window area. Replace the module as outlined in the previous procedure. In the Online Window area, reset all settings to factory defaults and read the new order code from the device using **Commands > Relay Maintenance > Update Order Code**. Send the saved settings from the Offline Window area to the online device. Refresh the order code in the **Device Setup** window and set the device to "Programmed" under **Settings > Product Setup > Installation**.

10.12 Battery

A battery powers the real time clock on startup of the device.

When required, the battery can be replaced. The battery type is 3 V cylindrical.

The power supply module contains the battery. The power supply modules were upgraded in 2014 to SH/SL from RH/RL, but the order code when purchasing a UR with redundant power supply remained as RH/RL so that customers can continue to use the same order codes. The order code can read RH or RL, while the module inside the unit reads SH or SL. The order code for replacement redundant power supply modules was changed to SH/SL.

10.12.1 Replace battery

When required, the battery can be replaced. The power supply module contains the battery.

⚠CAUTION **To avoid injury, ensure that the unit has been powered off for a minimum of three minutes before replacing the battery.**

Risk of fire if battery is replaced with incorrect type or polarity.

1. Turn off the power to the unit.
2. Wait a minimum of three minutes to ensure that there is no power to the battery.
3. As outlined in the previous section, open the unit by sliding up the plastic latch on the right side of the front panel (basic front panel) or unscrewing the panel (enhanced front panel).
4. For the basic front panel, it needs to be removed in order to access the power supply module, which is typically in the first slot on the left side and blocked by the hinge of the front panel. To remove the front panel, unscrew the bracket on the left side of the unit.
5. Remove the power supply module by simultaneously pulling the ejector clips at the top and bottom of the module and sliding it out.
6. Unscrew all four screws (not three) that attach the metal cover to the module. The fourth screw is at the back end of the module, on the opposite side from the clips, beside the white electronics part (see figure).
7. Slide the metal cover away from the clips about 0.5 cm (1/8 inch) and remove the cover.
8. Unclip the black plastic holder that keeps the battery in place. The plastic clips into the socket at the bottom on both sides—pull the plastic away from the battery. Use a flat-head screwdriver if you cannot unclip the plastic with your fingers.
9. Replace the battery with the identical make and model. For example, do not use a rechargeable battery. Observe the + and - polarity of the battery and replace it with the same polarity as marked on the battery holder.

Figure 10-28: Battery location on power supply module

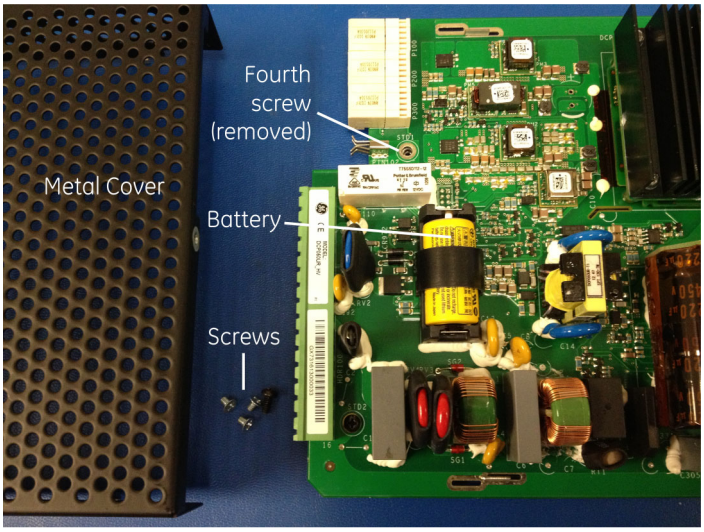

859717A1.cdr

10. Reinstall the battery holder and the metal cover, and reinsert the power supply module into the unit.
11. Power on the unit.
12. Dispose of the old battery as outlined in the next section.

10.12.2 Dispose of battery

10.12.2.1 EN Battery disposal

This product contains a battery that cannot be disposed of as unsorted municipal waste in the European Union. See the product documentation for specific battery information. The battery is marked with this symbol, which may include lettering to indicate cadmium (Cd), lead (Pb), or mercury (Hg). For proper recycling return the battery to your supplier or to a designated collection point. For more information see: www.recyclethis.info.

10.12.2.2 CS Nakládání s bateriemi

Tento produkt obsahuje baterie, které nemohou být zneškodněny v Evropské unii jako netříděný komunální odpadu. Viz dokumentace k produktu pro informace pro konkrétní baterie. Baterie je označena tímto symbolem, který může zahrnovat i uvedena písmena, kadmium (Cd), olovo (Pb), nebo rtuť (Hg). Pro správnou recyklaci baterií vraťte svémudodavateli nebo na určeném sběrném místě. Pro více informací viz: www.recyclethis.info.

10.12.2.3 DA Batteri affald

Dette produkt indeholder et batteri som ikke kan bortskaffes sammen med almindeligt husholdningsaffald i Europa. Se produktinformation for specifikke informationer om batteriet. Batteriet er forsynet med indgraveret symboler for hvad batteriet indeholder: kadmium (Cd), bly (Pb) og kviksølv (Hg). Europæiske brugere af elektrisk udstyr skal aflevere kasserede produkter til genbrug eller til leverandøren. Yderligere oplysninger findes på webstedet www.recyclethis.info.

10.12.2.4 DE Entsorgung von Batterien

Dieses Produkt beinhaltet eine Batterie, die nicht als unsortierter städtischer Abfall in der europäischen Union entsorgt werden darf. Beachten Sie die spezifischen Batterie-informationen in der Produktdokumentation. Die Batterie ist mit diesem Symbol gekennzeichnet, welches auch Hinweise auf möglicherweise enthaltene Stoffe wie Kadmium (Cd), Blei (Pb) oder Quecksilber (Hektogramm) darstellt. Für die korrekte Wiederverwertung bringen Sie diese Batterie zu Ihrem lokalen Lieferanten zurück oder entsorgen Sie das Produkt an den gekennzeichneten Sammelstellen. Weitere Informationen hierzu finden Sie auf der folgenden Website: www.recyclethis.info.

10.12.2.5 EL Απόρριψη μπαταριών

Αυτό το προϊόν περιέχει μια μπαταρία που δεν πρέπει να απορρίπτεται σε δημόσια συστήματα απόρριψης στην Ευρωπαϊκή Κοινότητα. Δείτε την τεκμηρίωση του προϊόντος για συγκεκριμένες πληροφορίες που αφορούν τη μπαταρία. Η μπαταρία είναι φέρει σήμανση με αυτό το σύμβολο, το οποίο μπορεί να περιλαμβάνει γράμματα για να δηλώσουν το κάδμιο (Cd), τον μόλυβδο (Pb), ή τον υδράργυρο (Hg). Για την κατάλληλη ανακύκλωση επιστρέψτε την μπαταρία στον προμηθευτή σας ή σε καθορισμένο σημείο συλλογής. Για περισσότερες πληροφορίες δείτε: www.recyclethis.info.

10.12.2.6 ES Eliminacion de baterias

Este producto contiene una batería que no se pueda eliminar como basura normal sin clasificar en la Unión Europea. Examine la documentación del producto para la información específica de la batería. La batería se marca con este símbolo, que puede incluir siglas para indicar el cadmio (Cd), el plomo (Pb), o el mercurio (Hg). Para el reciclaje apropiado, devuelva este producto a su distribuidor ó deshágase de él en los puntos de reciclaje designados. Para mas información : wwwrecyclethis.info.

10.12.2.7 ET Patareide kõrvaldamine

Käesolev toode sisaldab patareisid, mida Euroopa Liidus ei tohi kõrvaldada sorteerimata olmejäätmetena. Andmeid patareide kohta vaadake toote dokumentatsioonist. Patareid on märgistatud käesoleva sümboliga, millel võib olla kaadmiumi (Cd), pliid (Pb) või elavhõbedat (Hg) tähistavad tähed. Nõuetekohaseks ringlusse võtmiseks tagastage patarei tarnijale või kindlaksmääratud vastuvõtupunkti. Lisainformatsiooni saab Internetist aadressil: www.recyclethis.info.

10.12.2.8 FI Paristoje ja akkujen hävittäminen

Tuote sisältää pariston, jota ei saa hävittää Euroopan Unionin alueella talousjätteen mukana. Tarkista tuoteselosteesta tuotteen tiedot. Paristo on merkitty tällä symbolilla ja saattaa sisältää cadmiumia (Cd), lyijyä (Pb) tai elohopeaa (Hg). Oikean kierrätystavan varmistamiseksi palauta tuote paikalliselle jälleenmyyjälle tai palauta se paristojen keräyspisteeseen. Lisätietoja sivuilla www.recyclethis.info.

10.12.2.9 FR Élimination des piles

Ce produit contient une batterie qui ne peuvent être éliminés comme déchets municipaux non triés dans l'Union européenne. Voir la documentation du produit au niveau des renseignements sur la pile. La batterie est marqué de ce symbole, qui comprennent les indications cadmium (Cd), plomb (Pb), ou mercure (Hg). Pour le recyclage, retourner la batterie à votre fournisseur ou à un point de collecte. Pour plus d'informations, voir: www.recyclethis.info.

10.12.2.10 HU Akkumulátor hulladék kezelése

Ezen termék akkumulátort tartalmaz, amely az Európai Unión belül csak a kijelölt módon és helyen dobható ki. A terméken illetve a mellékelt ismertetőn olvasható a kadmium (Cd), ólom (Pb) vagy higany (Hg) tartalomra utaló betűjelzés. A hulladék akkumulátor leadható a termék forgalmazójánál új akkumulátor vásárlásakor, vagy a kijelölt elektronikai hulladékudvarokban. További információ a www.recyclethis.info oldalon.

10.12.2.11 IT Smaltimento batterie

Questo prodotto contiene una batteria che non può essere smaltita nei comuni contenitori per lo smaltimento rifiuti, nell' Unione Europea. Controllate la documentazione del prodotto per le informazioni specifiche sulla batteria. La batteria è contrassegnata con questo simbolo e può includere alcuni caratteri ad indicare la presenza di cadmio (Cd), piombo (Pb) oppure mercurio (Hg). Per il corretto smaltimento, potete restituirli al vostro fornitore locale, oppure rivolgervi e consegnarli presso i centri di raccolta preposti. Per maggiori informazioni vedere: ww.recyclethis.info.

10.12.2.12 LT Baterijų šalinimas

Šios įrangos sudėtyje yra baterijų, kurias draudžiama šalinti Europos Sąjungos viešose nerūšiuotų atliekų šalinimo sistemose. Informaciją apie baterijas galite rasti įrangos techninėje dokumentacijoje. Baterijos žymimos šiuo simboliu, papildomai gali būti nurodoma kad baterijų sudėtyje yra kadmio (Cd), švino (Pb) ar gyvsidabrio (Hg). Eksploatavimui nebetinkamas baterijas pristatykite į tam skirtas surinkimo vietas arba grąžinkite jas tiesioginiam tiekėjui, kad jos būtų tinkamai utilizuotos. Daugiau informacijos rasite šioje interneto svetainėje: www.recyclethis.info.

10.12.2.13 LV Bateriju likvidēšana

Šis produkts satur bateriju vai akumulatoru, kuru nedrīkst izmest Eiropas Savienībā esošajās sadzīves atkritumu sistēmās. Sk. produkta dokumentācijā, kur ir norādīta konkrēta informācija par bateriju vai akumulatoru. Baterijas vai akumulatora marķējumā ir šis simbols, kas var ietvert burtus, kuri norāda kadmiju (Cd), svinu (Pb) vai dzīvsudrabu (Hg). Pēc ekspluatācijas laika beigām baterijas vai akumulatori jānodod piegādātājam vai specializētā bateriju savākšanas vietā. Sīkāku informāciju var iegūt vietnē: www.recyclethis.info.

10.12.2.14 NL Verwijderen van baterijen

Dit product bevat een batterij welke niet kan verwijdert worden via de gemeentelijke huisvuilscheiding in de Europese Gemeenschap. Gelieve de product documentatie te controleren voor specifieke batterij informatie. De batterijen met deze label kunnen volgende indictaies bevatten cadium (Cd), lood (Pb) of kwik (Hg). Voor correcte vorm van kringloop, geef je de producten terug aan jou locale leverancier of geef het af aan een gespecialiseerde verzamelpunt. Meer informatie vindt u op de volgende website: www.recyclethis.info.

10.12.2.15 NO Retur av batteri

Dette produkt inneholder et batteri som ikke kan kastes med usortert kommunalt søppel i den Europeiske Unionen. Se produktdokumentasjonen for spesifikk batteriinformasjon. Batteriet er merket med dette symbolet som kan inkludere symboler for å indikere at kadmium (Cd), bly (Pb), eller kvikksølv (Hg) forekommer. Returner batteriet til leverandøren din eller til et dedikert oppsamlingspunkt for korrekt gjenvinning. For mer informasjon se: www.recyclethis.info.

10.12.2.16 PL Pozbywanie się zużytych baterii

Ten produkt zawiera baterie, które w Unii Europejskiej mogą być usuwane tylko jako posegregowane odpady komunalne. Dokładne informacje dotyczące użytych baterii znajdują się w dokumentacji produktu. Baterie oznaczone tym symbolem mogą zawierać dodatkowe oznaczenia literowe wskazujące na zawartość kadmu (Cd), ołowiu (Pb) lub rtęci (Hg). Dla zapewnienia właściwej utylizacji, należy zwrócić baterie do dostawcy albo do wyznaczonego punktu zbiórki. Więcej informacji można znaleźć na stronie internetowej www.recyclethis.info.

10.12.2.17 PT Eliminação de Baterias

Este produto contêm uma bateria que não pode ser considerado lixo municipal na União Europeia. Consulte a documentação do produto para obter informação específica da bateria. A bateria é identificada por meio de este símbolo, que pode incluir a rotulação para indicar o cádmio (Cd), chumbo (Pb), ou o mercúrio (hg). Para uma reciclagem apropriada envie a bateria para o seu fornecedor ou para um ponto de recolha designado. Para mais informação veja: www.recyclethis.info.

10.12.2.18 RU Утилизация батарей

Согласно европейской директиве об отходах электрического и электронного оборудования, продукты, содержащие батареи, нельзя утилизировать как обычные отходы на территории ЕС. Более подробную информацию вы найдете в документации к продукту. На этом символе могут присутствовать буквы, которые означают, что батарея содержит кадмий (Cd), свинец (Pb) или ртуть (Hg). Для надлежащей утилизации по окончании срока эксплуатации пользователь должен возвратить батареи локальному поставщику или сдать в специальный пункт приема. Подробности можно найти на веб-сайте: www.recyclethis.info.

10.12.2.19 SK Zaobchádzanie s batériami

Tento produkt obsahuje batériu, s ktorou sa v Európskej únii nesmie nakladať ako s netriedeným komunálnym odpadom. Dokumentácia k produktu obsahuje špecifické informácie o batérii. Batéria je označená týmto symbolom, ktorý môže obsahovať písmená na označenie kadmia (Cd), olova (Pb), alebo ortuti (Hg). Na správnu recykláciu vráťte batériu vášmu lokálnemu dodávateľovi alebo na určené zberné miesto. Pre viac informácii pozrite: www.recyclethis.info.

10.12.2.20 SL Odlaganje baterij

Ta izdelek vsebuje baterijo, ki je v Evropski uniji ni dovoljeno odstranjevati kot nesortiran komunalni odpadek. Za posebne informacije o bateriji glejte dokumentacijo izdelka. Baterija je označena s tem simbolom, ki lahko vključuje napise, ki označujejo kadmij (Cd), svinec (Pb) ali živo srebro (Hg). Za ustrezno recikliranje baterijo vrnite dobavitelju ali jo odstranite na določenem zbirališču. Za več informacij obiščite spletno stran: www.recyclethis.info.

10.12.2.21 SV Kassering av batteri

Denna produkt innehåller ett batteri som inte får kastas i allmänna sophanteringssytem inom den europeiska unionen. Se produktdokumentationen för specifik batteriinformation. Batteriet är märkt med denna symbol, vilket kan innebära att det innehåller kadmium (Cd), bly (Pb) eller kvicksilver (Hg). För korrekt återvinning skall batteriet returneras till leverantören eller till en därför avsedd deponering. För mer information, se: www.recyclethis.info.

10.12.2.22 TR Pil Geri Dönüşümü

Bu ürün Avrupa Birliği genel atık sistemlerine atılmaması gereken pil içermektedir. Daha detaylı pil bilgisi için ürünün kataloğunu inceleyiniz. Bu sembolle işaretlenmiş piller Kadmiyum(Cd), Kurşun(Pb) ya da Civa(Hg) içerebilir. Doğru geri dönüşüm için ürünü yerel tedarikçinize geri veriniz ya da özel işaretlenmiş toplama noktlarına atınız. Daha fazla bilgi için: www.recyclethis.info.

10.12.2.23 Global contacts

North America	905-294-6222
Latin America	+55 11 3614 1700
Europe, Middle East, Africa	+(34) 94 485 88 00
Asia	+86-21-2401-3208
India	+91 80 41314617

From GE Part Number 1604-0021-A1, GE Publication Number GEK-113574.

10.13 Clear files and data after uninstall

The unit can be decommissioned by turning off power to the unit and disconnecting the wires to it.

To clear files and settings in the UR:

1. On the UR front panel, navigate to **COMMANDS ⇨⇩ RELAY MAINTENANCE ⇨⇩ SERVICE COMMAND**, enter the value 20511, and press the **ENTER** key. The relay restarts and clears the UR.
2. Clear the flash memory using the **SETTINGS ⇨ PRODUCT SETUP ⇨⇩ CLEAR RELAY RECORDS** command.

To clear files and settings on the computer:

1. Uninstall the EnerVista UR Setup software.
2. Find and delete the following UR files:
   - .URS, .CID, and .ICD settings
   - .EVT event records
   - .CFG and .DAT COMTRADE

10.14 Repairs

The battery and modules inside the case can be replaced without return of the device to the factory. The firmware and software can be upgraded without return of the device to the factory.

Fuses in the power supply module are not field-replaceable.

Files can be requested for use by technical support staff, for example the Service Report (click the icon in the software or connect a USB drive to the graphical front panel) or under **Maintenance > Retrieve File**, as outlined elsewhere in this document.

For issues not solved by troubleshooting, the process to return the device to the factory for repair is as follows:

- Contact a GE Grid Solutions Technical Support Center. Contact information is found in the first chapter.
- Obtain a Return Materials Authorization (RMA) number from the Technical Support Center.
- Verify that the RMA and Commercial Invoice received have the correct information.
- Tightly pack the unit in a box with bubble wrap, foam material, or styrofoam inserts or packaging peanuts to cushion the item(s). You may also use double boxing whereby you place the box in a larger box that contains at least 5 cm of cushioning material.
- Ship the unit by courier or freight forwarder, along with the Commercial Invoice and RMA, to the factory.

  GE GRID SOLUTIONS
  650 MARKLAND STREET
  MARKHAM, ONTARIO
  CANADA L6C 0M1
  ATTN: SERVICE DEPT.
  RMA# : _____

  Customers are responsible for shipping costs to the factory, regardless of whether the unit is under warranty.
- Fax a copy of the shipping information to the GE Grid Solutions service department in Canada at +1 905 927 5098.

Use the detailed return procedure outlined at

https://www.gegridsolutions.com/multilin/support/ret_proc.htm

The current warranty and return information are outlined at

https://www.gegridsolutions.com/multilin/warranty.htm

10.15 Storage

Store the unit indoors in a cool, dry place. If possible, store in the original packaging. Follow the storage temperature range outlined in the Specifications.

NOTICE To avoid deterioration of electrolytic capacitors, power up units that are stored in a de-energized state once per year, for one hour continuously.

10.16 Disposal

Other than the battery, there are no special requirements for disposal of the unit at the end its service life. For customers located in the European Union, dispose of the battery as outlined earlier. To prevent non-intended use of the unit, remove the modules, dismantle the unit, and recycle the metal when possible.

C70 Capacitor Bank Protection and Control System

Appendix A: FlexAnalog operands

This appendix outlines FlexAnalog parameters.

A.1 FlexAnalog items

A FlexAnalog parameter is an analog parameter.

FlexAnalog items specific to your device are viewable in a web browser. Enter the IP address of the UR, access the **Device Information Menu** option, then the **FlexAnalog Parameter Listing** option. Entries displayed online depend on order code.

Each FlexAnalog address is the Modbus memory map address prefixed with 0004. For example, with Modbus address of 1638, the FlexAnalog address is 00041638.

Table A-1: C70 FlexAnalog data items

Hex address	FlexAnalog name	Units	Description
000416C0	Field RTD 1 Value	---	Field RTD 1 value
000416C1	Field RTD 2 Value	---	Field RTD 2 value
000416C2	Field RTD 3 Value	---	Field RTD 3 value
000416C3	Field RTD 4 Value	---	Field RTD 4 value
000416C4	Field RTD 5 Value	---	Field RTD 5 value
000416C5	Field RTD 6 Value	---	Field RTD 6 value
000416C6	Field RTD 7 Value	---	Field RTD 7 value
000416C7	Field RTD 8 Value	---	Field RTD 8 value
000416C8	Field TDR 1 Value	---	Field TDR 1 value
000416CA	Field TDR 2 Value	---	Field TDR 2 value
000416CC	Field TDR 3 Value	---	Field TDR 3 value
000416CE	Field TDR 4 Value	---	Field TDR 4 value
000416D0	Field TDR 5 Value	---	Field TDR 5 value
000416D2	Field TDR 6 Value	---	Field TDR 6 value
000416D4	Field TDR 7 Value	---	Field TDR 7 value
000416D6	Field TDR 8 Value	---	Field TDR 8 value
00041A00	SRC 1 Vag RMS	Volts	Source 1 phase AG voltage RMS
00041A02	SRC 1 Vbg RMS	Volts	Source 1 phase BG voltage RMS
00041A04	SRC 1 Vcg RMS	Volts	Source 1 phase CG voltage RMS

A

Hex address	FlexAnalog name	Units	Description
00041A06	SRC 1 Vag Mag	Volts	Source 1 phase AG voltage magnitude
00041A08	SRC 1 Vag Angle	Degrees	Source 1 phase AG voltage angle
00041A09	SRC 1 Vbg Mag	Volts	Source 1 phase BG voltage magnitude
00041A0B	SRC 1 Vbg Angle	Degrees	Source 1 phase BG voltage angle
00041A0C	SRC 1 Vcg Mag	Volts	Source 1 phase CG voltage magnitude
00041A0E	SRC 1 Vcg Angle	Degrees	Source 1 phase CG voltage angle
00041A0F	SRC 1 Vab RMS	Volts	Source 1 phase AB voltage RMS
00041A11	SRC 1 Vbc RMS	Volts	Source 1 phase BC voltage RMS
00041A13	SRC 1 Vca RMS	Volts	Source 1 phase CA voltage RMS
00041A15	SRC 1 Vab Mag	Volts	Source 1 phase AB voltage magnitude
00041A17	SRC 1 Vab Angle	Degrees	Source 1 phase AB voltage angle
00041A18	SRC 1 Vbc Mag	Volts	Source 1 phase BC voltage magnitude
00041A1A	SRC 1 Vbc Angle	Degrees	Source 1 phase BC voltage angle
00041A1B	SRC 1 Vca Mag	Volts	Source 1 phase CA voltage magnitude
00041A1D	SRC 1 Vca Angle	Degrees	Source 1 phase CA voltage angle
00041A1E	SRC 1 Vx RMS	Volts	Source 1 auxiliary voltage RMS
00041A20	SRC 1 Vx Mag	Volts	Source 1 auxiliary voltage magnitude
00041A22	SRC 1 Vx Angle	Degrees	Source 1 auxiliary voltage angle
00041A23	SRC 1 V_0 Mag	Volts	Source 1 zero-sequence voltage magnitude
00041A25	SRC 1 V_0 Angle	Degrees	Source 1 zero-sequence voltage angle
00041A26	SRC 1 V_1 Mag	Volts	Source 1 positive-sequence voltage magnitude
00041A28	SRC 1 V_1 Angle	Degrees	Source 1 positive-sequence voltage angle
00041A29	SRC 1 V_2 Mag	Volts	Source 1 negative-sequence voltage magnitude
00041A2B	SRC 1 V_2 Angle	Degrees	Source 1 negative-sequence voltage angle
00041A40	SRC 2 Vag RMS	Volts	Source 2 phase AG voltage RMS
00041A42	SRC 2 Vbg RMS	Volts	Source 2 phase BG voltage RMS
00041A44	SRC 2 Vcg RMS	Volts	Source 2 phase CG voltage RMS
00041A46	SRC 2 Vag Mag	Volts	Source 2 phase AG voltage magnitude
00041A48	SRC 2 Vag Angle	Degrees	Source 2 phase AG voltage angle
00041A49	SRC 2 Vbg Mag	Volts	Source 2 phase BG voltage magnitude
00041A4B	SRC 2 Vbg Angle	Degrees	Source 2 phase BG voltage angle
00041A4C	SRC 2 Vcg Mag	Volts	Source 2 phase CG voltage magnitude
00041A4E	SRC 2 Vcg Angle	Degrees	Source 2 phase CG voltage angle
00041A4F	SRC 2 Vab RMS	Volts	Source 2 phase AB voltage RMS
00041A51	SRC 2 Vbc RMS	Volts	Source 2 phase BC voltage RMS
00041A53	SRC 2 Vca RMS	Volts	Source 2 phase CA voltage RMS
00041A55	SRC 2 Vab Mag	Volts	Source 2 phase AB voltage magnitude
00041A57	SRC 2 Vab Angle	Degrees	Source 2 phase AB voltage angle
00041A58	SRC 2 Vbc Mag	Volts	Source 2 phase BC voltage magnitude
00041A5A	SRC 2 Vbc Angle	Degrees	Source 2 phase BC voltage angle
00041A5B	SRC 2 Vca Mag	Volts	Source 2 phase CA voltage magnitude
00041A5D	SRC 2 Vca Angle	Degrees	Source 2 phase CA voltage angle
00041A5E	SRC 2 Vx RMS	Volts	Source 2 auxiliary voltage RMS
00041A60	SRC 2 Vx Mag	Volts	Source 2 auxiliary voltage magnitude
00041A62	SRC 2 Vx Angle	Degrees	Source 2 auxiliary voltage angle
00041A63	SRC 2 V_0 Mag	Volts	Source 2 zero-sequence voltage magnitude
00041A65	SRC 2 V_0 Angle	Degrees	Source 2 zero-sequence voltage angle

Hex address	FlexAnalog name	Units	Description
00041A66	SRC 2 V_1 Mag	Volts	Source 2 positive-sequence voltage magnitude
00041A68	SRC 2 V_1 Angle	Degrees	Source 2 positive-sequence voltage angle
00041A69	SRC 2 V_2 Mag	Volts	Source 2 negative-sequence voltage magnitude
00041A6B	SRC 2 V_2 Angle	Degrees	Source 2 negative-sequence voltage angle
00041A80	SRC 3 Vag RMS	Volts	Source 3 phase AG voltage RMS
00041A82	SRC 3 Vbg RMS	Volts	Source 3 phase BG voltage RMS
00041A84	SRC 3 Vcg RMS	Volts	Source 3 phase CG voltage RMS
00041A86	SRC 3 Vag Mag	Volts	Source 3 phase AG voltage magnitude
00041A88	SRC 3 Vag Angle	Degrees	Source 3 phase AG voltage angle
00041A89	SRC 3 Vbg Mag	Volts	Source 3 phase BG voltage magnitude
00041A8B	SRC 3 Vbg Angle	Degrees	Source 3 phase BG voltage angle
00041A8C	SRC 3 Vcg Mag	Volts	Source 3 phase CG voltage magnitude
00041A8E	SRC 3 Vcg Angle	Degrees	Source 3 phase CG voltage angle
00041A8F	SRC 3 Vab RMS	Volts	Source 3 phase AB voltage RMS
00041A91	SRC 3 Vbc RMS	Volts	Source 3 phase BC voltage RMS
00041A93	SRC 3 Vca RMS	Volts	Source 3 phase CA voltage RMS
00041A95	SRC 3 Vab Mag	Volts	Source 3 phase AB voltage magnitude
00041A97	SRC 3 Vab Angle	Degrees	Source 3 phase AB voltage angle
00041A98	SRC 3 Vbc Mag	Volts	Source 3 phase BC voltage magnitude
00041A9A	SRC 3 Vbc Angle	Degrees	Source 3 phase BC voltage angle
00041A9B	SRC 3 Vca Mag	Volts	Source 3 phase CA voltage magnitude
00041A9D	SRC 3 Vca Angle	Degrees	Source 3 phase CA voltage angle
00041A9E	SRC 3 Vx RMS	Volts	Source 3 auxiliary voltage RMS
00041AA0	SRC 3 Vx Mag	Volts	Source 3 auxiliary voltage magnitude
00041AA2	SRC 3 Vx Angle	Degrees	Source 3 auxiliary voltage angle
00041AA3	SRC 3 V_0 Mag	Volts	Source 3 zero-sequence voltage magnitude
00041AA5	SRC 3 V_0 Angle	Degrees	Source 3 zero-sequence voltage angle
00041AA6	SRC 3 V_1 Mag	Volts	Source 3 positive-sequence voltage magnitude
00041AA8	SRC 3 V_1 Angle	Degrees	Source 3 positive-sequence voltage angle
00041AA9	SRC 3 V_2 Mag	Volts	Source 3 negative-sequence voltage magnitude
00041AAB	SRC 3 V_2 Angle	Degrees	Source 3 negative-sequence voltage angle
00041AC0	SRC 4 Vag RMS	Volts	Source 4 phase AG voltage RMS
00041AC2	SRC 4 Vbg RMS	Volts	Source 4 phase BG voltage RMS
00041AC4	SRC 4 Vcg RMS	Volts	Source 4 phase CG voltage RMS
00041AC6	SRC 4 Vag Mag	Volts	Source 4 phase AG voltage magnitude
00041AC8	SRC 4 Vag Angle	Degrees	Source 4 phase AG voltage angle
00041AC9	SRC 4 Vbg Mag	Volts	Source 4 phase BG voltage magnitude
00041ACB	SRC 4 Vbg Angle	Degrees	Source 4 phase BG voltage angle
00041ACC	SRC 4 Vcg Mag	Volts	Source 4 phase CG voltage magnitude
00041ACE	SRC 4 Vcg Angle	Degrees	Source 4 phase CG voltage angle
00041ACF	SRC 4 Vab RMS	Volts	Source 4 phase AB voltage RMS
00041AD1	SRC 4 Vbc RMS	Volts	Source 4 phase BC voltage RMS
00041AD3	SRC 4 Vca RMS	Volts	Source 4 phase CA voltage RMS
00041AD5	SRC 4 Vab Mag	Volts	Source 4 phase AB voltage magnitude
00041AD7	SRC 4 Vab Angle	Degrees	Source 4 phase AB voltage angle
00041AD8	SRC 4 Vbc Mag	Volts	Source 4 phase BC voltage magnitude
00041ADA	SRC 4 Vbc Angle	Degrees	Source 4 phase BC voltage angle

A

Hex address	FlexAnalog name	Units	Description
00041ADB	SRC 4 Vca Mag	Volts	Source 4 phase CA voltage magnitude
00041ADD	SRC 4 Vca Angle	Degrees	Source 4 phase CA voltage angle
00041ADE	SRC 4 Vx RMS	Volts	Source 4 auxiliary voltage RMS
00041AE0	SRC 4 Vx Mag	Volts	Source 4 auxiliary voltage magnitude
00041AE2	SRC 4 Vx Angle	Degrees	Source 4 auxiliary voltage angle
00041AE3	SRC 4 V_0 Mag	Volts	Source 4 zero-sequence voltage magnitude
00041AE5	SRC 4 V_0 Angle	Degrees	Source 4 zero-sequence voltage angle
00041AE6	SRC 4 V_1 Mag	Volts	Source 4 positive-sequence voltage magnitude
00041AE8	SRC 4 V_1 Angle	Degrees	Source 4 positive-sequence voltage angle
00041AE9	SRC 4 V_2 Mag	Volts	Source 4 negative-sequence voltage magnitude
00041AEB	SRC 4 V_2 Angle	Degrees	Source 4 negative-sequence voltage angle
00041B00	SRC 5 Vag RMS	Volts	Source 5 phase AG voltage RMS
00041B02	SRC 5 Vbg RMS	Volts	Source 5 phase BG voltage RMS
00041B04	SRC 5 Vcg RMS	Volts	Source 5 phase CG voltage RMS
00041B06	SRC 5 Vag Mag	Volts	Source 5 phase AG voltage magnitude
00041B08	SRC 5 Vag Angle	Degrees	Source 5 phase AG voltage angle
00041B09	SRC 5 Vbg Mag	Volts	Source 5 phase BG voltage magnitude
00041B0B	SRC 5 Vbg Angle	Degrees	Source 5 phase BG voltage angle
00041B0C	SRC 5 Vcg Mag	Volts	Source 5 phase CG voltage magnitude
00041B0E	SRC 5 Vcg Angle	Degrees	Source 5 phase CG voltage angle
00041B0F	SRC 5 Vab RMS	Volts	Source 5 phase AB voltage RMS
00041B11	SRC 5 Vbc RMS	Volts	Source 5 phase BC voltage RMS
00041B13	SRC 5 Vca RMS	Volts	Source 5 phase CA voltage RMS
00041B15	SRC 5 Vab Mag	Volts	Source 5 phase AB voltage magnitude
00041B17	SRC 5 Vab Angle	Degrees	Source 5 phase AB voltage angle
00041B18	SRC 5 Vbc Mag	Volts	Source 5 phase BC voltage magnitude
00041B1A	SRC 5 Vbc Angle	Degrees	Source 5 phase BC voltage angle
00041B1B	SRC 5 Vca Mag	Volts	Source 5 phase CA voltage magnitude
00041B1D	SRC 5 Vca Angle	Degrees	Source 5 phase CA voltage angle
00041B1E	SRC 5 Vx RMS	Volts	Source 5 auxiliary voltage RMS
00041B20	SRC 5 Vx Mag	Volts	Source 5 auxiliary voltage magnitude
00041B22	SRC 5 Vx Angle	Degrees	Source 5 auxiliary voltage angle
00041B23	SRC 5 V_0 Mag	Volts	Source 5 zero-sequence voltage magnitude
00041B25	SRC 5 V_0 Angle	Degrees	Source 5 zero-sequence voltage angle
00041B26	SRC 5 V_1 Mag	Volts	Source 5 positive-sequence voltage magnitude
00041B28	SRC 5 V_1 Angle	Degrees	Source 5 positive-sequence voltage angle
00041B29	SRC 5 V_2 Mag	Volts	Source 5 negative-sequence voltage magnitude
00041B2B	SRC 5 V_2 Angle	Degrees	Source 5 negative-sequence voltage angle
00041B40	SRC 6 Vag RMS	Volts	Source 6 phase AG voltage RMS
00041B42	SRC 6 Vbg RMS	Volts	Source 6 phase BG voltage RMS
00041B44	SRC 6 Vcg RMS	Volts	Source 6 phase CG voltage RMS
00041B46	SRC 6 Vag Mag	Volts	Source 6 phase AG voltage magnitude
00041B48	SRC 6 Vag Angle	Degrees	Source 6 phase AG voltage angle
00041B49	SRC 6 Vbg Mag	Volts	Source 6 phase BG voltage magnitude
00041B4B	SRC 6 Vbg Angle	Degrees	Source 6 phase BG voltage angle
00041B4C	SRC 6 Vcg Mag	Volts	Source 6 phase CG voltage magnitude
00041B4E	SRC 6 Vcg Angle	Degrees	Source 6 phase CG voltage angle

Hex address	FlexAnalog name	Units	Description
00041B4F	SRC 6 Vab RMS	Volts	Source 6 phase AB voltage RMS
00041B51	SRC 6 Vbc RMS	Volts	Source 6 phase BC voltage RMS
00041B53	SRC 6 Vca RMS	Volts	Source 6 phase CA voltage RMS
00041B55	SRC 6 Vab Mag	Volts	Source 6 phase AB voltage magnitude
00041B57	SRC 6 Vab Angle	Degrees	Source 6 phase AB voltage angle
00041B58	SRC 6 Vbc Mag	Volts	Source 6 phase BC voltage magnitude
00041B5A	SRC 6 Vbc Angle	Degrees	Source 6 phase BC voltage angle
00041B5B	SRC 6 Vca Mag	Volts	Source 6 phase CA voltage magnitude
00041B5D	SRC 6 Vca Angle	Degrees	Source 6 phase CA voltage angle
00041B5E	SRC 6 Vx RMS	Volts	Source 6 auxiliary voltage RMS
00041B60	SRC 6 Vx Mag	Volts	Source 6 auxiliary voltage magnitude
00041B62	SRC 6 Vx Angle	Degrees	Source 6 auxiliary voltage angle
00041B63	SRC 6 V_0 Mag	Volts	Source 6 zero-sequence voltage magnitude
00041B65	SRC 6 V_0 Angle	Degrees	Source 6 zero-sequence voltage angle
00041B66	SRC 6 V_1 Mag	Volts	Source 6 positive-sequence voltage magnitude
00041B68	SRC 6 V_1 Angle	Degrees	Source 6 positive-sequence voltage angle
00041B69	SRC 6 V_2 Mag	Volts	Source 6 negative-sequence voltage magnitude
00041B6B	SRC 6 V_2 Angle	Degrees	Source 6 negative-sequence voltage angle
00041C00	SRC 1 P	Watts	Source 1 three-phase real power
00041C02	SRC 1 Pa	Watts	Source 1 phase A real power
00041C04	SRC 1 Pb	Watts	Source 1 phase B real power
00041C06	SRC 1 Pc	Watts	Source 1 phase C real power
00041C08	SRC 1 Q	Vars	Source 1 three-phase reactive power
00041C0A	SRC 1 Qa	Vars	Source 1 phase A reactive power
00041C0C	SRC 1 Qb	Vars	Source 1 phase B reactive power
00041C0E	SRC 1 Qc	Vars	Source 1 phase C reactive power
00041C10	SRC 1 S	VA	Source 1 three-phase apparent power
00041C12	SRC 1 Sa	VA	Source 1 phase A apparent power
00041C14	SRC 1 Sb	VA	Source 1 phase B apparent power
00041C16	SRC 1 Sc	VA	Source 1 phase C apparent power
00041C18	SRC 1 PF	---	Source 1 three-phase power factor
00041C19	SRC 1 Phase A PF	---	Source 1 phase A power factor
00041C1A	SRC 1 Phase B PF	---	Source 1 phase B power factor
00041C1B	SRC 1 Phase C PF	---	Source 1 phase C power factor
00041C20	SRC 2 P	Watts	Source 2 three-phase real power
00041C22	SRC 2 Pa	Watts	Source 2 phase A real power
00041C24	SRC 2 Pb	Watts	Source 2 phase B real power
00041C26	SRC 2 Pc	Watts	Source 2 phase C real power
00041C28	SRC 2 Q	Vars	Source 2 three-phase reactive power
00041C2A	SRC 2 Qa	Vars	Source 2 phase A reactive power
00041C2C	SRC 2 Qb	Vars	Source 2 phase B reactive power
00041C2E	SRC 2 Qc	Vars	Source 2 phase C reactive power
00041C30	SRC 2 S	VA	Source 2 three-phase apparent power
00041C32	SRC 2 Sa	VA	Source 2 phase A apparent power
00041C34	SRC 2 Sb	VA	Source 2 phase B apparent power
00041C36	SRC 2 Sc	VA	Source 2 phase C apparent power
00041C38	SRC 2 PF	---	Source 2 three-phase power factor

A

Hex address	FlexAnalog name	Units	Description
00041C39	SRC 2 Phase A PF	---	Source 2 phase A power factor
00041C3A	SRC 2 Phase B PF	---	Source 2 phase B power factor
00041C3B	SRC 2 Phase C PF	---	Source 2 phase C power factor
00041C40	SRC 3 P	Watts	Source 3 three-phase real power
00041C42	SRC 3 Pa	Watts	Source 3 phase A real power
00041C44	SRC 3 Pb	Watts	Source 3 phase B real power
00041C46	SRC 3 Pc	Watts	Source 3 phase C real power
00041C48	SRC 3 Q	Vars	Source 3 three-phase reactive power
00041C4A	SRC 3 Qa	Vars	Source 3 phase A reactive power
00041C4C	SRC 3 Qb	Vars	Source 3 phase B reactive power
00041C4E	SRC 3 Qc	Vars	Source 3 phase C reactive power
00041C50	SRC 3 S	VA	Source 3 three-phase apparent power
00041C52	SRC 3 Sa	VA	Source 3 phase A apparent power
00041C54	SRC 3 Sb	VA	Source 3 phase B apparent power
00041C56	SRC 3 Sc	VA	Source 3 phase C apparent power
00041C58	SRC 3 PF	---	Source 3 three-phase power factor
00041C59	SRC 3 Phase A PF	---	Source 3 phase A power factor
00041C5A	SRC 3 Phase B PF	---	Source 3 phase B power factor
00041C5B	SRC 3 Phase C PF	---	Source 3 phase C power factor
00041C60	SRC 4 P	Watts	Source 4 three-phase real power
00041C62	SRC 4 Pa	Watts	Source 4 phase A real power
00041C64	SRC 4 Pb	Watts	Source 4 phase B real power
00041C66	SRC 4 Pc	Watts	Source 4 phase C real power
00041C68	SRC 4 Q	Vars	Source 4 three-phase reactive power
00041C6A	SRC 4 Qa	Vars	Source 4 phase A reactive power
00041C6C	SRC 4 Qb	Vars	Source 4 phase B reactive power
00041C6E	SRC 4 Qc	Vars	Source 4 phase C reactive power
00041C70	SRC 4 S	VA	Source 4 three-phase apparent power
00041C72	SRC 4 Sa	VA	Source 4 phase A apparent power
00041C74	SRC 4 Sb	VA	Source 4 phase B apparent power
00041C76	SRC 4 Sc	VA	Source 4 phase C apparent power
00041C78	SRC 4 PF	---	Source 4 three-phase power factor
00041C79	SRC 4 Phase A PF	---	Source 4 phase A power factor
00041C7A	SRC 4 Phase B PF	---	Source 4 phase B power factor
00041C7B	SRC 4 Phase C PF	---	Source 4 phase C power factor
00041C80	SRC 5 P	Watts	Source 5 three-phase real power
00041C82	SRC 5 Pa	Watts	Source 5 phase A real power
00041C84	SRC 5 Pb	Watts	Source 5 phase B real power
00041C86	SRC 5 Pc	Watts	Source 5 phase C real power
00041C88	SRC 5 Q	Vars	Source 5 three-phase reactive power
00041C8A	SRC 5 Qa	Vars	Source 5 phase A reactive power
00041C8C	SRC 5 Qb	Vars	Source 5 phase B reactive power
00041C8E	SRC 5 Qc	Vars	Source 5 phase C reactive power
00041C90	SRC 5 S	VA	Source 5 three-phase apparent power
00041C92	SRC 5 Sa	VA	Source 5 phase A apparent power
00041C94	SRC 5 Sb	VA	Source 5 phase B apparent power
00041C96	SRC 5 Sc	VA	Source 5 phase C apparent power

A

Hex address	FlexAnalog name	Units	Description
00041C98	SRC 5 PF	---	Source 5 three-phase power factor
00041C99	SRC 5 Phase A PF	---	Source 5 phase A power factor
00041C9A	SRC 5 Phase B PF	---	Source 5 phase B power factor
00041C9B	SRC 5 Phase C PF	---	Source 5 phase C power factor
00041CA0	SRC 6 P	Watts	Source 6 three-phase real power
00041CA2	SRC 6 Pa	Watts	Source 6 phase A real power
00041CA4	SRC 6 Pb	Watts	Source 6 phase B real power
00041CA6	SRC 6 Pc	Watts	Source 6 phase C real power
00041CA8	SRC 6 Q	Vars	Source 6 three-phase reactive power
00041CAA	SRC 6 Qa	Vars	Source 6 phase A reactive power
00041CAC	SRC 6 Qb	Vars	Source 6 phase B reactive power
00041CAE	SRC 6 Qc	Vars	Source 6 phase C reactive power
00041CB0	SRC 6 S	VA	Source 6 three-phase apparent power
00041CB2	SRC 6 Sa	VA	Source 6 phase A apparent power
00041CB4	SRC 6 Sb	VA	Source 6 phase B apparent power
00041CB6	SRC 6 Sc	VA	Source 6 phase C apparent power
00041CB8	SRC 6 PF	---	Source 6 three-phase power factor
00041CB9	SRC 6 Phase A PF	---	Source 6 phase A power factor
00041CBA	SRC 6 Phase B PF	---	Source 6 phase B power factor
00041CBB	SRC 6 Phase C PF	---	Source 6 phase C power factor
00041D80	SRC 1 Frequency	Hz	Source 1 frequency
00041D82	SRC 2 Frequency	Hz	Source 2 frequency
00041D84	SRC 3 Frequency	Hz	Source 3 frequency
00041D86	SRC 4 Frequency	Hz	Source 4 frequency
00041D88	SRC 5 Frequency	Hz	Source 5 frequency
00041D8A	SRC 6 Frequency	Hz	Source 6 frequency
00041F80	SRC 1 Va THD	%	Source 1 phase A voltage total harmonic distortion (THD)
00041F81	SRC 1 Va Harm[2]	%	Source 1 phase A voltage second harmonic
00041F82	SRC 1 Va Harm[3]	%	Source 1 phase A voltage third harmonic
00041F83	SRC 1 Va Harm[4]	%	Source 1 phase A voltage fourth harmonic
00041F84	SRC 1 Va Harm[5]	%	Source 1 phase A voltage fifth harmonic
00041F85	SRC 1 Va Harm[6]	%	Source 1 phase A voltage sixth harmonic
00041F86	SRC 1 Va Harm[7]	%	Source 1 phase A voltage seventh harmonic
00041F87	SRC 1 Va Harm[8]	%	Source 1 phase A voltage eighth harmonic
00041F88	SRC 1 Va Harm[9]	%	Source 1 phase A voltage ninth harmonic
00041F89	SRC 1 Va Harm[10]	%	Source 1 phase A voltage tenth harmonic
00041F8A	SRC 1 Va Harm[11]	%	Source 1 phase A voltage eleventh harmonic
00041F8B	SRC 1 Va Harm[12]	%	Source 1 phase A voltage twelfth harmonic
00041F8C	SRC 1 Va Harm[13]	%	Source 1 phase A voltage thirteenth harmonic
00041F8D	SRC 1 Va Harm[14]	%	Source 1 phase A voltage fourteenth harmonic
00041F8E	SRC 1 Va Harm[15]	%	Source 1 phase A voltage fifteenth harmonic
00041F8F	SRC 1 Va Harm[16]	%	Source 1 phase A voltage sixteenth harmonic
00041F90	SRC 1 Va Harm[17]	%	Source 1 phase A voltage seventeenth harmonic
00041F91	SRC 1 Va Harm[18]	%	Source 1 phase A voltage eighteenth harmonic
00041F92	SRC 1 Va Harm[19]	%	Source 1 phase A voltage nineteenth harmonic
00041F93	SRC 1 Va Harm[20]	%	Source 1 phase A voltage twentieth harmonic
00041F94	SRC 1 Va Harm[21]	%	Source 1 phase A voltage twenty-first harmonic

A

Hex address	FlexAnalog name	Units	Description
00041F95	SRC 1 Va Harm[22]	%	Source 1 phase A voltage twenty-second harmonic
00041F96	SRC 1 Va Harm[23]	%	Source 1 phase A voltage twenty-third harmonic
00041F97	SRC 1 Va Harm[24]	%	Source 1 phase A voltage twenty-fourth harmonic
00041F98	SRC 1 Va Harm[25]	%	Source 1 phase A voltage twenty-fifth harmonic
00041F99	SRC 1 Vb THD	%	Source 1 phase B voltage total harmonic distortion (THD)
00041F9A	SRC 1 Vb Harm[2]	%	Source 1 phase B voltage second harmonic
00041F9B	SRC 1 Vb Harm[3]	%	Source 1 phase B voltage third harmonic
00041F9C	SRC 1 Vb Harm[4]	%	Source 1 phase B voltage fourth harmonic
00041F9D	SRC 1 Vb Harm[5]	%	Source 1 phase B voltage fifth harmonic
00041F9E	SRC 1 Vb Harm[6]	%	Source 1 phase B voltage sixth harmonic
00041F9F	SRC 1 Vb Harm[7]	%	Source 1 phase B voltage seventh harmonic
00041FA0	SRC 1 Vb Harm[8]	%	Source 1 phase B voltage eighth harmonic
00041FA1	SRC 1 Vb Harm[9]	%	Source 1 phase B voltage ninth harmonic
00041FA2	SRC 1 Vb Harm[10]	%	Source 1 phase B voltage tenth harmonic
00041FA3	SRC 1 Vb Harm[11]	%	Source 1 phase B voltage eleventh harmonic
00041FA4	SRC 1 Vb Harm[12]	%	Source 1 phase B voltage twelfth harmonic
00041FA5	SRC 1 Vb Harm[13]	%	Source 1 phase B voltage thirteenth harmonic
00041FA6	SRC 1 Vb Harm[14]	%	Source 1 phase B voltage fourteenth harmonic
00041FA7	SRC 1 Vb Harm[15]	%	Source 1 phase B voltage fifteenth harmonic
00041FA8	SRC 1 Vb Harm[16]	%	Source 1 phase B voltage sixteenth harmonic
00041FA9	SRC 1 Vb Harm[17]	%	Source 1 phase B voltage seventeenth harmonic
00041FAA	SRC 1 Vb Harm[18]	%	Source 1 phase B voltage eighteenth harmonic
00041FAB	SRC 1 Vb Harm[19]	%	Source 1 phase B voltage nineteenth harmonic
00041FAC	SRC 1 Vb Harm[20]	%	Source 1 phase B voltage twentieth harmonic
00041FAD	SRC 1 Vb Harm[21]	%	Source 1 phase B voltage twenty-first harmonic
00041FAE	SRC 1 Vb Harm[22]	%	Source 1 phase B voltage twenty-second harmonic
00041FAF	SRC 1 Vb Harm[23]	%	Source 1 phase B voltage twenty-third harmonic
00041FB0	SRC 1 Vb Harm[24]	%	Source 1 phase B voltage twenty-fourth harmonic
00041FB1	SRC 1 Vb Harm[25]	%	Source 1 phase B voltage twenty-fifth harmonic
00041FB2	SRC 1 Vc THD	%	Source 1 phase C voltage total harmonic distortion (THD)
00041FB3	SRC 1 Vc Harm[2]	%	Source 1 phase C voltage second harmonic
00041FB4	SRC 1 Vc Harm[3]	%	Source 1 phase C voltage third harmonic
00041FB5	SRC 1 Vc Harm[4]	%	Source 1 phase C voltage fourth harmonic
00041FB6	SRC 1 Vc Harm[5]	%	Source 1 phase C voltage fifth harmonic
00041FB7	SRC 1 Vc Harm[6]	%	Source 1 phase C voltage sixth harmonic
00041FB8	SRC 1 Vc Harm[7]	%	Source 1 phase C voltage seventh harmonic
00041FB9	SRC 1 Vc Harm[8]	%	Source 1 phase C voltage eighth harmonic
00041FBA	SRC 1 Vc Harm[9]	%	Source 1 phase C voltage ninth harmonic
00041FBB	SRC 1 Vc Harm[10]	%	Source 1 phase C voltage tenth harmonic
00041FBC	SRC 1 Vc Harm[11]	%	Source 1 phase C voltage eleventh harmonic
00041FBD	SRC 1 Vc Harm[12]	%	Source 1 phase C voltage twelfth harmonic
00041FBE	SRC 1 Vc Harm[13]	%	Source 1 phase C voltage thirteenth harmonic
00041FBF	SRC 1 Vc Harm[14]	%	Source 1 phase C voltage fourteenth harmonic
00041FC0	SRC 1 Vc Harm[15]	%	Source 1 phase C voltage fifteenth harmonic
00041FC1	SRC 1 Vc Harm[16]	%	Source 1 phase C voltage sixteenth harmonic
00041FC2	SRC 1 Vc Harm[17]	%	Source 1 phase C voltage seventeenth harmonic
00041FC3	SRC 1 Vc Harm[18]	%	Source 1 phase C voltage eighteenth harmonic

Hex address	FlexAnalog name	Units	Description
00041FC4	SRC 1 Vc Harm[19]	%	Source 1 phase C voltage nineteenth harmonic
00041FC5	SRC 1 Vc Harm[20]	%	Source 1 phase C voltage twentieth harmonic
00041FC6	SRC 1 Vc Harm[21]	%	Source 1 phase C voltage twenty-first harmonic
00041FC7	SRC 1 Vc Harm[22]	%	Source 1 phase C voltage twenty-second harmonic
00041FC8	SRC 1 Vc Harm[23]	%	Source 1 phase C voltage twenty-third harmonic
00041FC9	SRC 1 Vc Harm[24]	%	Source 1 phase C voltage twenty-fourth harmonic
00041FCA	SRC 1 Vc Harm[25]	%	Source 1 phase C voltage twenty-fifth harmonic
00041FCB	SRC 2 Va THD	%	Source 2 phase A voltage total harmonic distortion (THD)
00041FCC	SRC 2 Va Harm[2]	%	Source 2 phase A voltage second harmonic
00041FCD	SRC 2 Va Harm[3]	%	Source 2 phase A voltage third harmonic
00041FCE	SRC 2 Va Harm[4]	%	Source 2 phase A voltage fourth harmonic
00041FCF	SRC 2 Va Harm[5]	%	Source 2 phase A voltage fifth harmonic
00041FD0	SRC 2 Va Harm[6]	%	Source 2 phase A voltage sixth harmonic
00041FD1	SRC 2 Va Harm[7]	%	Source 2 phase A voltage seventh harmonic
00041FD2	SRC 2 Va Harm[8]	%	Source 2 phase A voltage eighth harmonic
00041FD3	SRC 2 Va Harm[9]	%	Source 2 phase A voltage ninth harmonic
00041FD4	SRC 2 Va Harm[10]	%	Source 2 phase A voltage tenth harmonic
00041FD5	SRC 2 Va Harm[11]	%	Source 2 phase A voltage eleventh harmonic
00041FD6	SRC 2 Va Harm[12]	%	Source 2 phase A voltage twelfth harmonic
00041FD7	SRC 2 Va Harm[13]	%	Source 2 phase A voltage thirteenth harmonic
00041FD8	SRC 2 Va Harm[14]	%	Source 2 phase A voltage fourteenth harmonic
00041FD9	SRC 2 Va Harm[15]	%	Source 2 phase A voltage fifteenth harmonic
00041FDA	SRC 2 Va Harm[16]	%	Source 2 phase A voltage sixteenth harmonic
00041FDB	SRC 2 Va Harm[17]	%	Source 2 phase A voltage seventeenth harmonic
00041FDC	SRC 2 Va Harm[18]	%	Source 2 phase A voltage eighteenth harmonic
00041FDD	SRC 2 Va Harm[19]	%	Source 2 phase A voltage nineteenth harmonic
00041FDE	SRC 2 Va Harm[20]	%	Source 2 phase A voltage twentieth harmonic
00041FDF	SRC 2 Va Harm[21]	%	Source 2 phase A voltage twenty-first harmonic
00041FE0	SRC 2 Va Harm[22]	%	Source 2 phase A voltage twenty-second harmonic
00041FE1	SRC 2 Va Harm[23]	%	Source 2 phase A voltage twenty-third harmonic
00041FE2	SRC 2 Va Harm[24]	%	Source 2 phase A voltage twenty-fourth harmonic
00041FE3	SRC 2 Va Harm[25]	%	Source 2 phase A voltage twenty-fifth harmonic
00041FE4	SRC 2 Vb THD	%	Source 2 phase B voltage total harmonic distortion (THD)
00041FE5	SRC 2 Vb Harm[2]	%	Source 2 phase B voltage second harmonic
00041FE6	SRC 2 Vb Harm[3]	%	Source 2 phase B voltage third harmonic
00041FE7	SRC 2 Vb Harm[4]	%	Source 2 phase B voltage fourth harmonic
00041FE8	SRC 2 Vb Harm[5]	%	Source 2 phase B voltage fifth harmonic
00041FE9	SRC 2 Vb Harm[6]	%	Source 2 phase B voltage sixth harmonic
00041FEA	SRC 2 Vb Harm[7]	%	Source 2 phase B voltage seventh harmonic
00041FEB	SRC 2 Vb Harm[8]	%	Source 2 phase B voltage eighth harmonic
00041FEC	SRC 2 Vb Harm[9]	%	Source 2 phase B voltage ninth harmonic
00041FED	SRC 2 Vb Harm[10]	%	Source 2 phase B voltage tenth harmonic
00041FEE	SRC 2 Vb Harm[11]	%	Source 2 phase B voltage eleventh harmonic
00041FEF	SRC 2 Vb Harm[12]	%	Source 2 phase B voltage twelfth harmonic
00041FF0	SRC 2 Vb Harm[13]	%	Source 2 phase B voltage thirteenth harmonic
00041FF1	SRC 2 Vb Harm[14]	%	Source 2 phase B voltage fourteenth harmonic
00041FF2	SRC 2 Vb Harm[15]	%	Source 2 phase B voltage fifteenth harmonic

A

Hex address	FlexAnalog name	Units	Description
00041FF3	SRC 2 Vb Harm[16]	%	Source 2 phase B voltage sixteenth harmonic
00041FF4	SRC 2 Vb Harm[17]	%	Source 2 phase B voltage seventeenth harmonic
00041FF5	SRC 2 Vb Harm[18]	%	Source 2 phase B voltage eighteenth harmonic
00041FF6	SRC 2 Vb Harm[19]	%	Source 2 phase B voltage nineteenth harmonic
00041FF7	SRC 2 Vb Harm[20]	%	Source 2 phase B voltage twentieth harmonic
00041FF8	SRC 2 Vb Harm[21]	%	Source 2 phase B voltage twenty-first harmonic
00041FF9	SRC 2 Vb Harm[22]	%	Source 2 phase B voltage twenty-second harmonic
00041FFA	SRC 2 Vb Harm[23]	%	Source 2 phase B voltage twenty-third harmonic
00041FFB	SRC 2 Vb Harm[24]	%	Source 2 phase B voltage twenty-fourth harmonic
00041FFC	SRC 2 Vb Harm[25]	%	Source 2 phase B voltage twenty-fifth harmonic
00041FFD	SRC 2 Vc THD	%	Source 2 phase C voltage total harmonic distortion (THD)
00041FFE	SRC 2 Vc Harm[2]	%	Source 2 phase C voltage second harmonic
00041FFF	SRC 2 Vc Harm[3]	%	Source 2 phase C voltage third harmonic
00042000	SRC 2 Vc Harm[4]	%	Source 2 phase C voltage fourth harmonic
00042001	SRC 2 Vc Harm[5]	%	Source 2 phase C voltage fifth harmonic
00042002	SRC 2 Vc Harm[6]	%	Source 2 phase C voltage sixth harmonic
00042003	SRC 2 Vc Harm[7]	%	Source 2 phase C voltage seventh harmonic
00042004	SRC 2 Vc Harm[8]	%	Source 2 phase C voltage eighth harmonic
00042005	SRC 2 Vc Harm[9]	%	Source 2 phase C voltage ninth harmonic
00042006	SRC 2 Vc Harm[10]	%	Source 2 phase C voltage tenth harmonic
00042007	SRC 2 Vc Harm[11]	%	Source 2 phase C voltage eleventh harmonic
00042008	SRC 2 Vc Harm[12]	%	Source 2 phase C voltage twelfth harmonic
00042009	SRC 2 Vc Harm[13]	%	Source 2 phase C voltage thirteenth harmonic
0004200A	SRC 2 Vc Harm[14]	%	Source 2 phase C voltage fourteenth harmonic
0004200B	SRC 2 Vc Harm[15]	%	Source 2 phase C voltage fifteenth harmonic
0004200C	SRC 2 Vc Harm[16]	%	Source 2 phase C voltage sixteenth harmonic
0004200D	SRC 2 Vc Harm[17]	%	Source 2 phase C voltage seventeenth harmonic
0004200E	SRC 2 Vc Harm[18]	%	Source 2 phase C voltage eighteenth harmonic
0004200F	SRC 2 Vc Harm[19]	%	Source 2 phase C voltage nineteenth harmonic
00042010	SRC 2 Vc Harm[20]	%	Source 2 phase C voltage twentieth harmonic
00042011	SRC 2 Vc Harm[21]	%	Source 2 phase C voltage twenty-first harmonic
00042012	SRC 2 Vc Harm[22]	%	Source 2 phase C voltage twenty-second harmonic
00042013	SRC 2 Vc Harm[23]	%	Source 2 phase C voltage twenty-third harmonic
00042014	SRC 2 Vc Harm[24]	%	Source 2 phase C voltage twenty-fourth harmonic
00042015	SRC 2 Vc Harm[25]	%	Source 2 phase C voltage twenty-fifth harmonic
00042016	SRC 3 Va THD	%	Source 3 phase A voltage total harmonic distortion (THD)
00042017	SRC 3 Va Harm[2]	%	Source 3 phase A voltage second harmonic
00042018	SRC 3 Va Harm[3]	%	Source 3 phase A voltage third harmonic
00042019	SRC 3 Va Harm[4]	%	Source 3 phase A voltage fourth harmonic
0004201A	SRC 3 Va Harm[5]	%	Source 3 phase A voltage fifth harmonic
0004201B	SRC 3 Va Harm[6]	%	Source 3 phase A voltage sixth harmonic
0004201C	SRC 3 Va Harm[7]	%	Source 3 phase A voltage seventh harmonic
0004201D	SRC 3 Va Harm[8]	%	Source 3 phase A voltage eighth harmonic
0004201E	SRC 3 Va Harm[9]	%	Source 3 phase A voltage ninth harmonic
0004201F	SRC 3 Va Harm[10]	%	Source 3 phase A voltage tenth harmonic
00042020	SRC 3 Va Harm[11]	%	Source 3 phase A voltage eleventh harmonic
00042021	SRC 3 Va Harm[12]	%	Source 3 phase A voltage twelfth harmonic

A

Hex address	FlexAnalog name	Units	Description
00042022	SRC 3 Va Harm[13]	%	Source 3 phase A voltage thirteenth harmonic
00042023	SRC 3 Va Harm[14]	%	Source 3 phase A voltage fourteenth harmonic
00042024	SRC 3 Va Harm[15]	%	Source 3 phase A voltage fifteenth harmonic
00042025	SRC 3 Va Harm[16]	%	Source 3 phase A voltage sixteenth harmonic
00042026	SRC 3 Va Harm[17]	%	Source 3 phase A voltage seventeenth harmonic
00042027	SRC 3 Va Harm[18]	%	Source 3 phase A voltage eighteenth harmonic
00042028	SRC 3 Va Harm[19]	%	Source 3 phase A voltage nineteenth harmonic
00042029	SRC 3 Va Harm[20]	%	Source 3 phase A voltage twentieth harmonic
0004202A	SRC 3 Va Harm[21]	%	Source 3 phase A voltage twenty-first harmonic
0004202B	SRC 3 Va Harm[22]	%	Source 3 phase A voltage twenty-second harmonic
0004202C	SRC 3 Va Harm[23]	%	Source 3 phase A voltage twenty-third harmonic
0004202D	SRC 3 Va Harm[24]	%	Source 3 phase A voltage twenty-fourth harmonic
0004202E	SRC 3 Va Harm[25]	%	Source 3 phase A voltage twenty-fifth harmonic
0004202F	SRC 3 Vb THD	%	Source 3 phase B voltage total harmonic distortion (THD)
00042030	SRC 3 Vb Harm[2]	%	Source 3 phase B voltage second harmonic
00042031	SRC 3 Vb Harm[3]	%	Source 3 phase B voltage third harmonic
00042032	SRC 3 Vb Harm[4]	%	Source 3 phase B voltage fourth harmonic
00042033	SRC 3 Vb Harm[5]	%	Source 3 phase B voltage fifth harmonic
00042034	SRC 3 Vb Harm[6]	%	Source 3 phase B voltage sixth harmonic
00042035	SRC 3 Vb Harm[7]	%	Source 3 phase B voltage seventh harmonic
00042036	SRC 3 Vb Harm[8]	%	Source 3 phase B voltage eighth harmonic
00042037	SRC 3 Vb Harm[9]	%	Source 3 phase B voltage ninth harmonic
00042038	SRC 3 Vb Harm[10]	%	Source 3 phase B voltage tenth harmonic
00042039	SRC 3 Vb Harm[11]	%	Source 3 phase B voltage eleventh harmonic
0004203A	SRC 3 Vb Harm[12]	%	Source 3 phase B voltage twelfth harmonic
0004203B	SRC 3 Vb Harm[13]	%	Source 3 phase B voltage thirteenth harmonic
0004203C	SRC 3 Vb Harm[14]	%	Source 3 phase B voltage fourteenth harmonic
0004203D	SRC 3 Vb Harm[15]	%	Source 3 phase B voltage fifteenth harmonic
0004203E	SRC 3 Vb Harm[16]	%	Source 3 phase B voltage sixteenth harmonic
0004203F	SRC 3 Vb Harm[17]	%	Source 3 phase B voltage seventeenth harmonic
00042040	SRC 3 Vb Harm[18]	%	Source 3 phase B voltage eighteenth harmonic
00042041	SRC 3 Vb Harm[19]	%	Source 3 phase B voltage nineteenth harmonic
00042042	SRC 3 Vb Harm[20]	%	Source 3 phase B voltage twentieth harmonic
00042043	SRC 3 Vb Harm[21]	%	Source 3 phase B voltage twenty-first harmonic
00042044	SRC 3 Vb Harm[22]	%	Source 3 phase B voltage twenty-second harmonic
00042045	SRC 3 Vb Harm[23]	%	Source 3 phase B voltage twenty-third harmonic
00042046	SRC 3 Vb Harm[24]	%	Source 3 phase B voltage twenty-fourth harmonic
00042047	SRC 3 Vb Harm[25]	%	Source 3 phase B voltage twenty-fifth harmonic
00042048	SRC 3 Vc THD	%	Source 3 phase C voltage total harmonic distortion (THD)
00042049	SRC 3 Vc Harm[2]	%	Source 3 phase C voltage second harmonic
0004204A	SRC 3 Vc Harm[3]	%	Source 3 phase C voltage third harmonic
0004204B	SRC 3 Vc Harm[4]	%	Source 3 phase C voltage fourth harmonic
0004204C	SRC 3 Vc Harm[5]	%	Source 3 phase C voltage fifth harmonic
0004204D	SRC 3 Vc Harm[6]	%	Source 3 phase C voltage sixth harmonic
0004204E	SRC 3 Vc Harm[7]	%	Source 3 phase C voltage seventh harmonic
0004204F	SRC 3 Vc Harm[8]	%	Source 3 phase C voltage eighth harmonic
00042050	SRC 3 Vc Harm[9]	%	Source 3 phase C voltage ninth harmonic

A

Hex address	FlexAnalog name	Units	Description
00042051	SRC 3 Vc Harm[10]	%	Source 3 phase C voltage tenth harmonic
00042052	SRC 3 Vc Harm[11]	%	Source 3 phase C voltage eleventh harmonic
00042053	SRC 3 Vc Harm[12]	%	Source 3 phase C voltage twelfth harmonic
00042054	SRC 3 Vc Harm[13]	%	Source 3 phase C voltage thirteenth harmonic
00042055	SRC 3 Vc Harm[14]	%	Source 3 phase C voltage fourteenth harmonic
00042056	SRC 3 Vc Harm[15]	%	Source 3 phase C voltage fifteenth harmonic
00042057	SRC 3 Vc Harm[16]	%	Source 3 phase C voltage sixteenth harmonic
00042058	SRC 3 Vc Harm[17]	%	Source 3 phase C voltage seventeenth harmonic
00042059	SRC 3 Vc Harm[18]	%	Source 3 phase C voltage eighteenth harmonic
0004205A	SRC 3 Vc Harm[19]	%	Source 3 phase C voltage nineteenth harmonic
0004205B	SRC 3 Vc Harm[20]	%	Source 3 phase C voltage twentieth harmonic
0004205C	SRC 3 Vc Harm[21]	%	Source 3 phase C voltage twenty-first harmonic
0004205D	SRC 3 Vc Harm[22]	%	Source 3 phase C voltage twenty-second harmonic
0004205E	SRC 3 Vc Harm[23]	%	Source 3 phase C voltage twenty-third harmonic
0004205F	SRC 3 Vc Harm[24]	%	Source 3 phase C voltage twenty-fourth harmonic
00042060	SRC 3 Vc Harm[25]	%	Source 3 phase C voltage twenty-fifth harmonic
00042061	SRC 4 Va THD	%	Source 4 phase A voltage total harmonic distortion (THD)
00042062	SRC 4 Va Harm[2]	%	Source 4 phase A voltage second harmonic
00042063	SRC 4 Va Harm[3]	%	Source 4 phase A voltage third harmonic
00042064	SRC 4 Va Harm[4]	%	Source 4 phase A voltage fourth harmonic
00042065	SRC 4 Va Harm[5]	%	Source 4 phase A voltage fifth harmonic
00042066	SRC 4 Va Harm[6]	%	Source 4 phase A voltage sixth harmonic
00042067	SRC 4 Va Harm[7]	%	Source 4 phase A voltage seventh harmonic
00042068	SRC 4 Va Harm[8]	%	Source 4 phase A voltage eighth harmonic
00042069	SRC 4 Va Harm[9]	%	Source 4 phase A voltage ninth harmonic
0004206A	SRC 4 Va Harm[10]	%	Source 4 phase A voltage tenth harmonic
0004206B	SRC 4 Va Harm[11]	%	Source 4 phase A voltage eleventh harmonic
0004206C	SRC 4 Va Harm[12]	%	Source 4 phase A voltage twelfth harmonic
0004206D	SRC 4 Va Harm[13]	%	Source 4 phase A voltage thirteenth harmonic
0004206E	SRC 4 Va Harm[14]	%	Source 4 phase A voltage fourteenth harmonic
0004206F	SRC 4 Va Harm[15]	%	Source 4 phase A voltage fifteenth harmonic
00042070	SRC 4 Va Harm[16]	%	Source 4 phase A voltage sixteenth harmonic
00042071	SRC 4 Va Harm[17]	%	Source 4 phase A voltage seventeenth harmonic
00042072	SRC 4 Va Harm[18]	%	Source 4 phase A voltage eighteenth harmonic
00042073	SRC 4 Va Harm[19]	%	Source 4 phase A voltage nineteenth harmonic
00042074	SRC 4 Va Harm[20]	%	Source 4 phase A voltage twentieth harmonic
00042075	SRC 4 Va Harm[21]	%	Source 4 phase A voltage twenty-first harmonic
00042076	SRC 4 Va Harm[22]	%	Source 4 phase A voltage twenty-second harmonic
00042077	SRC 4 Va Harm[23]	%	Source 4 phase A voltage twenty-third harmonic
00042078	SRC 4 Va Harm[24]	%	Source 4 phase A voltage twenty-fourth harmonic
00042079	SRC 4 Va Harm[25]	%	Source 4 phase A voltage twenty-fifth harmonic
0004207A	SRC 4 Vb THD	%	Source 4 phase B voltage total harmonic distortion (THD)
0004207B	SRC 4 Vb Harm[2]	%	Source 4 phase B voltage second harmonic
0004207C	SRC 4 Vb Harm[3]	%	Source 4 phase B voltage third harmonic
0004207D	SRC 4 Vb Harm[4]	%	Source 4 phase B voltage fourth harmonic
0004207E	SRC 4 Vb Harm[5]	%	Source 4 phase B voltage fifth harmonic
0004207F	SRC 4 Vb Harm[6]	%	Source 4 phase B voltage sixth harmonic

A

Hex address	FlexAnalog name	Units	Description
00042080	SRC 4 Vb Harm[7]	%	Source 4 phase B voltage seventh harmonic
00042081	SRC 4 Vb Harm[8]	%	Source 4 phase B voltage eighth harmonic
00042082	SRC 4 Vb Harm[9]	%	Source 4 phase B voltage ninth harmonic
00042083	SRC 4 Vb Harm[10]	%	Source 4 phase B voltage tenth harmonic
00042084	SRC 4 Vb Harm[11]	%	Source 4 phase B voltage eleventh harmonic
00042085	SRC 4 Vb Harm[12]	%	Source 4 phase B voltage twelfth harmonic
00042086	SRC 4 Vb Harm[13]	%	Source 4 phase B voltage thirteenth harmonic
00042087	SRC 4 Vb Harm[14]	%	Source 4 phase B voltage fourteenth harmonic
00042088	SRC 4 Vb Harm[15]	%	Source 4 phase B voltage fifteenth harmonic
00042089	SRC 4 Vb Harm[16]	%	Source 4 phase B voltage sixteenth harmonic
0004208A	SRC 4 Vb Harm[17]	%	Source 4 phase B voltage seventeenth harmonic
0004208B	SRC 4 Vb Harm[18]	%	Source 4 phase B voltage eighteenth harmonic
0004208C	SRC 4 Vb Harm[19]	%	Source 4 phase B voltage nineteenth harmonic
0004208D	SRC 4 Vb Harm[20]	%	Source 4 phase B voltage twentieth harmonic
0004208E	SRC 4 Vb Harm[21]	%	Source 4 phase B voltage twenty-first harmonic
0004208F	SRC 4 Vb Harm[22]	%	Source 4 phase B voltage twenty-second harmonic
00042090	SRC 4 Vb Harm[23]	%	Source 4 phase B voltage twenty-third harmonic
00042091	SRC 4 Vb Harm[24]	%	Source 4 phase B voltage twenty-fourth harmonic
00042092	SRC 4 Vb Harm[25]	%	Source 4 phase B voltage twenty-fifth harmonic
00042093	SRC 4 Vc THD	%	Source 4 phase C voltage total harmonic distortion (THD)
00042094	SRC 4 Vc Harm[2]	%	Source 4 phase C voltage second harmonic
00042095	SRC 4 Vc Harm[3]	%	Source 4 phase C voltage third harmonic
00042096	SRC 4 Vc Harm[4]	%	Source 4 phase C voltage fourth harmonic
00042097	SRC 4 Vc Harm[5]	%	Source 4 phase C voltage fifth harmonic
00042098	SRC 4 Vc Harm[6]	%	Source 4 phase C voltage sixth harmonic
00042099	SRC 4 Vc Harm[7]	%	Source 4 phase C voltage seventh harmonic
0004209A	SRC 4 Vc Harm[8]	%	Source 4 phase C voltage eighth harmonic
0004209B	SRC 4 Vc Harm[9]	%	Source 4 phase C voltage ninth harmonic
0004209C	SRC 4 Vc Harm[10]	%	Source 4 phase C voltage tenth harmonic
0004209D	SRC 4 Vc Harm[11]	%	Source 4 phase C voltage eleventh harmonic
0004209E	SRC 4 Vc Harm[12]	%	Source 4 phase C voltage twelfth harmonic
0004209F	SRC 4 Vc Harm[13]	%	Source 4 phase C voltage thirteenth harmonic
000420A0	SRC 4 Vc Harm[14]	%	Source 4 phase C voltage fourteenth harmonic
000420A1	SRC 4 Vc Harm[15]	%	Source 4 phase C voltage fifteenth harmonic
000420A2	SRC 4 Vc Harm[16]	%	Source 4 phase C voltage sixteenth harmonic
000420A3	SRC 4 Vc Harm[17]	%	Source 4 phase C voltage seventeenth harmonic
000420A4	SRC 4 Vc Harm[18]	%	Source 4 phase C voltage eighteenth harmonic
000420A5	SRC 4 Vc Harm[19]	%	Source 4 phase C voltage nineteenth harmonic
000420A6	SRC 4 Vc Harm[20]	%	Source 4 phase C voltage twentieth harmonic
000420A7	SRC 4 Vc Harm[21]	%	Source 4 phase C voltage twenty-first harmonic
000420A8	SRC 4 Vc Harm[22]	%	Source 4 phase C voltage twenty-second harmonic
000420A9	SRC 4 Vc Harm[23]	%	Source 4 phase C voltage twenty-third harmonic
000420AA	SRC 4 Vc Harm[24]	%	Source 4 phase C voltage twenty-fourth harmonic
000420AB	SRC 4 Vc Harm[25]	%	Source 4 phase C voltage twenty-fifth harmonic
000420AC	SRC 5 Va THD	%	Source 5 phase A voltage total harmonic distortion (THD)
000420AD	SRC 5 Va Harm[2]	%	Source 5 phase A voltage second harmonic
000420AE	SRC 5 Va Harm[3]	%	Source 5 phase A voltage third harmonic

A

Hex address	FlexAnalog name	Units	Description
000420AF	SRC 5 Va Harm[4]	%	Source 5 phase A voltage fourth harmonic
000420B0	SRC 5 Va Harm[5]	%	Source 5 phase A voltage fifth harmonic
000420B1	SRC 5 Va Harm[6]	%	Source 5 phase A voltage sixth harmonic
000420B2	SRC 5 Va Harm[7]	%	Source 5 phase A voltage seventh harmonic
000420B3	SRC 5 Va Harm[8]	%	Source 5 phase A voltage eighth harmonic
000420B4	SRC 5 Va Harm[9]	%	Source 5 phase A voltage ninth harmonic
000420B5	SRC 5 Va Harm[10]	%	Source 5 phase A voltage tenth harmonic
000420B6	SRC 5 Va Harm[11]	%	Source 5 phase A voltage eleventh harmonic
000420B7	SRC 5 Va Harm[12]	%	Source 5 phase A voltage twelfth harmonic
000420B8	SRC 5 Va Harm[13]	%	Source 5 phase A voltage thirteenth harmonic
000420B9	SRC 5 Va Harm[14]	%	Source 5 phase A voltage fourteenth harmonic
000420BA	SRC 5 Va Harm[15]	%	Source 5 phase A voltage fifteenth harmonic
000420BB	SRC 5 Va Harm[16]	%	Source 5 phase A voltage sixteenth harmonic
000420BC	SRC 5 Va Harm[17]	%	Source 5 phase A voltage seventeenth harmonic
000420BD	SRC 5 Va Harm[18]	%	Source 5 phase A voltage eighteenth harmonic
000420BE	SRC 5 Va Harm[19]	%	Source 5 phase A voltage nineteenth harmonic
000420BF	SRC 5 Va Harm[20]	%	Source 5 phase A voltage twentieth harmonic
000420C0	SRC 5 Va Harm[21]	%	Source 5 phase A voltage twenty-first harmonic
000420C1	SRC 5 Va Harm[22]	%	Source 5 phase A voltage twenty-second harmonic
000420C2	SRC 5 Va Harm[23]	%	Source 5 phase A voltage twenty-third harmonic
000420C3	SRC 5 Va Harm[24]	%	Source 5 phase A voltage twenty-fourth harmonic
000420C4	SRC 5 Va Harm[25]	%	Source 5 phase A voltage twenty-fifth harmonic
000420C5	SRC 5 Vb THD	%	Source 5 phase B voltage total harmonic distortion (THD)
000420C6	SRC 5 Vb Harm[2]	%	Source 5 phase B voltage second harmonic
000420C7	SRC 5 Vb Harm[3]	%	Source 5 phase B voltage third harmonic
000420C8	SRC 5 Vb Harm[4]	%	Source 5 phase B voltage fourth harmonic
000420C9	SRC 5 Vb Harm[5]	%	Source 5 phase B voltage fifth harmonic
000420CA	SRC 5 Vb Harm[6]	%	Source 5 phase B voltage sixth harmonic
000420CB	SRC 5 Vb Harm[7]	%	Source 5 phase B voltage seventh harmonic
000420CC	SRC 5 Vb Harm[8]	%	Source 5 phase B voltage eighth harmonic
000420CD	SRC 5 Vb Harm[9]	%	Source 5 phase B voltage ninth harmonic
000420CE	SRC 5 Vb Harm[10]	%	Source 5 phase B voltage tenth harmonic
000420CF	SRC 5 Vb Harm[11]	%	Source 5 phase B voltage eleventh harmonic
000420D0	SRC 5 Vb Harm[12]	%	Source 5 phase B voltage twelfth harmonic
000420D1	SRC 5 Vb Harm[13]	%	Source 5 phase B voltage thirteenth harmonic
000420D2	SRC 5 Vb Harm[14]	%	Source 5 phase B voltage fourteenth harmonic
000420D3	SRC 5 Vb Harm[15]	%	Source 5 phase B voltage fifteenth harmonic
000420D4	SRC 5 Vb Harm[16]	%	Source 5 phase B voltage sixteenth harmonic
000420D5	SRC 5 Vb Harm[17]	%	Source 5 phase B voltage seventeenth harmonic
000420D6	SRC 5 Vb Harm[18]	%	Source 5 phase B voltage eighteenth harmonic
000420D7	SRC 5 Vb Harm[19]	%	Source 5 phase B voltage nineteenth harmonic
000420D8	SRC 5 Vb Harm[20]	%	Source 5 phase B voltage twentieth harmonic
000420D9	SRC 5 Vb Harm[21]	%	Source 5 phase B voltage twenty-first harmonic
000420DA	SRC 5 Vb Harm[22]	%	Source 5 phase B voltage twenty-second harmonic
000420DB	SRC 5 Vb Harm[23]	%	Source 5 phase B voltage twenty-third harmonic
000420DC	SRC 5 Vb Harm[24]	%	Source 5 phase B voltage twenty-fourth harmonic
000420DD	SRC 5 Vb Harm[25]	%	Source 5 phase B voltage twenty-fifth harmonic

A

Hex address	FlexAnalog name	Units	Description
000420DE	SRC 5 Vc THD	%	Source 5 phase C voltage total harmonic distortion (THD)
000420DF	SRC 5 Vc Harm[2]	%	Source 5 phase C voltage second harmonic
000420E0	SRC 5 Vc Harm[3]	%	Source 5 phase C voltage third harmonic
000420E1	SRC 5 Vc Harm[4]	%	Source 5 phase C voltage fourth harmonic
000420E2	SRC 5 Vc Harm[5]	%	Source 5 phase C voltage fifth harmonic
000420E3	SRC 5 Vc Harm[6]	%	Source 5 phase C voltage sixth harmonic
000420E4	SRC 5 Vc Harm[7]	%	Source 5 phase C voltage seventh harmonic
000420E5	SRC 5 Vc Harm[8]	%	Source 5 phase C voltage eighth harmonic
000420E6	SRC 5 Vc Harm[9]	%	Source 5 phase C voltage ninth harmonic
000420E7	SRC 5 Vc Harm[10]	%	Source 5 phase C voltage tenth harmonic
000420E8	SRC 5 Vc Harm[11]	%	Source 5 phase C voltage eleventh harmonic
000420E9	SRC 5 Vc Harm[12]	%	Source 5 phase C voltage twelfth harmonic
000420EA	SRC 5 Vc Harm[13]	%	Source 5 phase C voltage thirteenth harmonic
000420EB	SRC 5 Vc Harm[14]	%	Source 5 phase C voltage fourteenth harmonic
000420EC	SRC 5 Vc Harm[15]	%	Source 5 phase C voltage fifteenth harmonic
000420ED	SRC 5 Vc Harm[16]	%	Source 5 phase C voltage sixteenth harmonic
000420EE	SRC 5 Vc Harm[17]	%	Source 5 phase C voltage seventeenth harmonic
000420EF	SRC 5 Vc Harm[18]	%	Source 5 phase C voltage eighteenth harmonic
000420F0	SRC 5 Vc Harm[19]	%	Source 5 phase C voltage nineteenth harmonic
000420F1	SRC 5 Vc Harm[20]	%	Source 5 phase C voltage twentieth harmonic
000420F2	SRC 5 Vc Harm[21]	%	Source 5 phase C voltage twenty-first harmonic
000420F3	SRC 5 Vc Harm[22]	%	Source 5 phase C voltage twenty-second harmonic
000420F4	SRC 5 Vc Harm[23]	%	Source 5 phase C voltage twenty-third harmonic
000420F5	SRC 5 Vc Harm[24]	%	Source 5 phase C voltage twenty-fourth harmonic
000420F6	SRC 5 Vc Harm[25]	%	Source 5 phase C voltage twenty-fifth harmonic
000420F7	SRC 6 Va THD	%	Source 6 phase A voltage total harmonic distortion (THD)
000420F8	SRC 6 Va Harm[2]	%	Source 6 phase A voltage second harmonic
000420F9	SRC 6 Va Harm[3]	%	Source 6 phase A voltage third harmonic
000420FA	SRC 6 Va Harm[4]	%	Source 6 phase A voltage fourth harmonic
000420FB	SRC 6 Va Harm[5]	%	Source 6 phase A voltage fifth harmonic
000420FC	SRC 6 Va Harm[6]	%	Source 6 phase A voltage sixth harmonic
000420FD	SRC 6 Va Harm[7]	%	Source 6 phase A voltage seventh harmonic
000420FE	SRC 6 Va Harm[8]	%	Source 6 phase A voltage eighth harmonic
000420FF	SRC 6 Va Harm[9]	%	Source 6 phase A voltage ninth harmonic
00042100	SRC 6 Va Harm[10]	%	Source 6 phase A voltage tenth harmonic
00042101	SRC 6 Va Harm[11]	%	Source 6 phase A voltage eleventh harmonic
00042102	SRC 6 Va Harm[12]	%	Source 6 phase A voltage twelfth harmonic
00042103	SRC 6 Va Harm[13]	%	Source 6 phase A voltage thirteenth harmonic
00042104	SRC 6 Va Harm[14]	%	Source 6 phase A voltage fourteenth harmonic
00042105	SRC 6 Va Harm[15]	%	Source 6 phase A voltage fifteenth harmonic
00042106	SRC 6 Va Harm[16]	%	Source 6 phase A voltage sixteenth harmonic
00042107	SRC 6 Va Harm[17]	%	Source 6 phase A voltage seventeenth harmonic
00042108	SRC 6 Va Harm[18]	%	Source 6 phase A voltage eighteenth harmonic
00042109	SRC 6 Va Harm[19]	%	Source 6 phase A voltage nineteenth harmonic
0004210A	SRC 6 Va Harm[20]	%	Source 6 phase A voltage twentieth harmonic
0004210B	SRC 6 Va Harm[21]	%	Source 6 phase A voltage twenty-first harmonic
0004210C	SRC 6 Va Harm[22]	%	Source 6 phase A voltage twenty-second harmonic

A

Hex address	FlexAnalog name	Units	Description
0004210D	SRC 6 Va Harm[23]	%	Source 6 phase A voltage twenty-third harmonic
0004210E	SRC 6 Va Harm[24]	%	Source 6 phase A voltage twenty-fourth harmonic
0004210F	SRC 6 Va Harm[25]	%	Source 6 phase A voltage twenty-fifth harmonic
00042110	SRC 6 Vb THD	%	Source 6 phase B voltage total harmonic distortion (THD)
00042111	SRC 6 Vb Harm[2]	%	Source 6 phase B voltage second harmonic
00042112	SRC 6 Vb Harm[3]	%	Source 6 phase B voltage third harmonic
00042113	SRC 6 Vb Harm[4]	%	Source 6 phase B voltage fourth harmonic
00042114	SRC 6 Vb Harm[5]	%	Source 6 phase B voltage fifth harmonic
00042115	SRC 6 Vb Harm[6]	%	Source 6 phase B voltage sixth harmonic
00042116	SRC 6 Vb Harm[7]	%	Source 6 phase B voltage seventh harmonic
00042117	SRC 6 Vb Harm[8]	%	Source 6 phase B voltage eighth harmonic
00042118	SRC 6 Vb Harm[9]	%	Source 6 phase B voltage ninth harmonic
00042119	SRC 6 Vb Harm[10]	%	Source 6 phase B voltage tenth harmonic
0004211A	SRC 6 Vb Harm[11]	%	Source 6 phase B voltage eleventh harmonic
0004211B	SRC 6 Vb Harm[12]	%	Source 6 phase B voltage twelfth harmonic
0004211C	SRC 6 Vb Harm[13]	%	Source 6 phase B voltage thirteenth harmonic
0004211D	SRC 6 Vb Harm[14]	%	Source 6 phase B voltage fourteenth harmonic
0004211E	SRC 6 Vb Harm[15]	%	Source 6 phase B voltage fifteenth harmonic
0004211F	SRC 6 Vb Harm[16]	%	Source 6 phase B voltage sixteenth harmonic
00042120	SRC 6 Vb Harm[17]	%	Source 6 phase B voltage seventeenth harmonic
00042121	SRC 6 Vb Harm[18]	%	Source 6 phase B voltage eighteenth harmonic
00042122	SRC 6 Vb Harm[19]	%	Source 6 phase B voltage nineteenth harmonic
00042123	SRC 6 Vb Harm[20]	%	Source 6 phase B voltage twentieth harmonic
00042124	SRC 6 Vb Harm[21]	%	Source 6 phase B voltage twenty-first harmonic
00042125	SRC 6 Vb Harm[22]	%	Source 6 phase B voltage twenty-second harmonic
00042126	SRC 6 Vb Harm[23]	%	Source 6 phase B voltage twenty-third harmonic
00042127	SRC 6 Vb Harm[24]	%	Source 6 phase B voltage twenty-fourth harmonic
00042128	SRC 6 Vb Harm[25]	%	Source 6 phase B voltage twenty-fifth harmonic
00042129	SRC 6 Vc THD	%	Source 6 phase C voltage total harmonic distortion (THD)
0004212A	SRC 6 Vc Harm[2]	%	Source 6 phase C voltage second harmonic
0004212B	SRC 6 Vc Harm[3]	%	Source 6 phase C voltage third harmonic
0004212C	SRC 6 Vc Harm[4]	%	Source 6 phase C voltage fourth harmonic
0004212D	SRC 6 Vc Harm[5]	%	Source 6 phase C voltage fifth harmonic
0004212E	SRC 6 Vc Harm[6]	%	Source 6 phase C voltage sixth harmonic
0004212F	SRC 6 Vc Harm[7]	%	Source 6 phase C voltage seventh harmonic
00042130	SRC 6 Vc Harm[8]	%	Source 6 phase C voltage eighth harmonic
00042131	SRC 6 Vc Harm[9]	%	Source 6 phase C voltage ninth harmonic
00042132	SRC 6 Vc Harm[10]	%	Source 6 phase C voltage tenth harmonic
00042133	SRC 6 Vc Harm[11]	%	Source 6 phase C voltage eleventh harmonic
00042134	SRC 6 Vc Harm[12]	%	Source 6 phase C voltage twelfth harmonic
00042135	SRC 6 Vc Harm[13]	%	Source 6 phase C voltage thirteenth harmonic
00042136	SRC 6 Vc Harm[14]	%	Source 6 phase C voltage fourteenth harmonic
00042137	SRC 6 Vc Harm[15]	%	Source 6 phase C voltage fifteenth harmonic
00042138	SRC 6 Vc Harm[16]	%	Source 6 phase C voltage sixteenth harmonic
00042139	SRC 6 Vc Harm[17]	%	Source 6 phase C voltage seventeenth harmonic
0004213A	SRC 6 Vc Harm[18]	%	Source 6 phase C voltage eighteenth harmonic
0004213B	SRC 6 Vc Harm[19]	%	Source 6 phase C voltage nineteenth harmonic

A

Hex address	FlexAnalog name	Units	Description
0004213C	SRC 6 Vc Harm[20]	%	Source 6 phase C voltage twentieth harmonic
0004213D	SRC 6 Vc Harm[21]	%	Source 6 phase C voltage twenty-first harmonic
0004213E	SRC 6 Vc Harm[22]	%	Source 6 phase C voltage twenty-second harmonic
0004213F	SRC 6 Vc Harm[23]	%	Source 6 phase C voltage twenty-third harmonic
00042140	SRC 6 Vc Harm[24]	%	Source 6 phase C voltage twenty-fourth harmonic
00042141	SRC 6 Vc Harm[25]	%	Source 6 phase C voltage twenty-fifth harmonic
00042800	SRC 1 Ia THD	%	Source 1 phase A current total harmonic distortion
00042801	SRC 1 Ia Harm[2]	%	Source 1 phase A current second harmonic
00042802	SRC 1 Ia Harm[3]	%	Source 1 phase A current third harmonic
00042803	SRC 1 Ia Harm[4]	%	Source 1 phase A current fourth harmonic
00042804	SRC 1 Ia Harm[5]	%	Source 1 phase A current fifth harmonic
00042805	SRC 1 Ia Harm[6]	%	Source 1 phase A current sixth harmonic
00042806	SRC 1 Ia Harm[7]	%	Source 1 phase A current seventh harmonic
00042807	SRC 1 Ia Harm[8]	%	Source 1 phase A current eighth harmonic
00042808	SRC 1 Ia Harm[9]	%	Source 1 phase A current ninth harmonic
00042809	SRC 1 Ia Harm[10]	%	Source 1 phase A current tenth harmonic
0004280A	SRC 1 Ia Harm[11]	%	Source 1 phase A current eleventh harmonic
0004280B	SRC 1 Ia Harm[12]	%	Source 1 phase A current twelfth harmonic
0004280C	SRC 1 Ia Harm[13]	%	Source 1 phase A current thirteenth harmonic
0004280D	SRC 1 Ia Harm[14]	%	Source 1 phase A current fourteenth harmonic
0004280E	SRC 1 Ia Harm[15]	%	Source 1 phase A current fifteenth harmonic
0004280F	SRC 1 Ia Harm[16]	%	Source 1 phase A current sixteenth harmonic
00042810	SRC 1 Ia Harm[17]	%	Source 1 phase A current seventeenth harmonic
00042811	SRC 1 Ia Harm[18]	%	Source 1 phase A current eighteenth harmonic
00042812	SRC 1 Ia Harm[19]	%	Source 1 phase A current nineteenth harmonic
00042813	SRC 1 Ia Harm[20]	%	Source 1 phase A current twentieth harmonic
00042814	SRC 1 Ia Harm[21]	%	Source 1 phase A current twenty-first harmonic
00042815	SRC 1 Ia Harm[22]	%	Source 1 phase A current twenty-second harmonic
00042816	SRC 1 Ia Harm[23]	%	Source 1 phase A current twenty-third harmonic
00042817	SRC 1 Ia Harm[24]	%	Source 1 phase A current twenty-fourth harmonic
00042818	SRC 1 Ia Harm[25]	%	Source 1 phase A current twenty-fifth harmonic
00042821	SRC 1 Ib THD	%	Source 1 phase B current total harmonic distortion
00042822	SRC 1 Ib Harm[2]	%	Source 1 phase B current second harmonic
00042823	SRC 1 Ib Harm[3]	%	Source 1 phase B current third harmonic
00042824	SRC 1 Ib Harm[4]	%	Source 1 phase B current fourth harmonic
00042825	SRC 1 Ib Harm[5]	%	Source 1 phase B current fifth harmonic
00042826	SRC 1 Ib Harm[6]	%	Source 1 phase B current sixth harmonic
00042827	SRC 1 Ib Harm[7]	%	Source 1 phase B current seventh harmonic
00042828	SRC 1 Ib Harm[8]	%	Source 1 phase B current eighth harmonic
00042829	SRC 1 Ib Harm[9]	%	Source 1 phase B current ninth harmonic
0004282A	SRC 1 Ib Harm[10]	%	Source 1 phase B current tenth harmonic
0004282B	SRC 1 Ib Harm[11]	%	Source 1 phase B current eleventh harmonic
0004282C	SRC 1 Ib Harm[12]	%	Source 1 phase B current twelfth harmonic
0004282D	SRC 1 Ib Harm[13]	%	Source 1 phase B current thirteenth harmonic
0004282E	SRC 1 Ib Harm[14]	%	Source 1 phase B current fourteenth harmonic
0004282F	SRC 1 Ib Harm[15]	%	Source 1 phase B current fifteenth harmonic
00042830	SRC 1 Ib Harm[16]	%	Source 1 phase B current sixteenth harmonic

A

Hex address	FlexAnalog name	Units	Description
00042831	SRC 1 Ib Harm[17]	%	Source 1 phase B current seventeenth harmonic
00042832	SRC 1 Ib Harm[18]	%	Source 1 phase B current eighteenth harmonic
00042833	SRC 1 Ib Harm[19]	%	Source 1 phase B current nineteenth harmonic
00042834	SRC 1 Ib Harm[20]	%	Source 1 phase B current twentieth harmonic
00042835	SRC 1 Ib Harm[21]	%	Source 1 phase B current twenty-first harmonic
00042836	SRC 1 Ib Harm[22]	%	Source 1 phase B current twenty-second harmonic
00042837	SRC 1 Ib Harm[23]	%	Source 1 phase B current twenty-third harmonic
00042838	SRC 1 Ib Harm[24]	%	Source 1 phase B current twenty-fourth harmonic
00042839	SRC 1 Ib Harm[25]	%	Source 1 phase B current twenty-fifth harmonic
00042842	SRC 1 Ic THD	%	Source 1 phase C current total harmonic distortion
00042843	SRC 1 Ic Harm[2]	%	Source 1 phase C current second harmonic
00042844	SRC 1 Ic Harm[3]	%	Source 1 phase C current third harmonic
00042845	SRC 1 Ic Harm[4]	%	Source 1 phase C current fourth harmonic
00042846	SRC 1 Ic Harm[5]	%	Source 1 phase C current fifth harmonic
00042847	SRC 1 Ic Harm[6]	%	Source 1 phase C current sixth harmonic
00042848	SRC 1 Ic Harm[7]	%	Source 1 phase C current seventh harmonic
00042849	SRC 1 Ic Harm[8]	%	Source 1 phase C current eighth harmonic
0004284A	SRC 1 Ic Harm[9]	%	Source 1 phase C current ninth harmonic
0004284B	SRC 1 Ic Harm[10]	%	Source 1 phase C current tenth harmonic
0004284C	SRC 1 Ic Harm[11]	%	Source 1 phase C current eleventh harmonic
0004284D	SRC 1 Ic Harm[12]	%	Source 1 phase C current twelfth harmonic
0004284E	SRC 1 Ic Harm[13]	%	Source 1 phase C current thirteenth harmonic
0004284F	SRC 1 Ic Harm[14]	%	Source 1 phase C current fourteenth harmonic
00042850	SRC 1 Ic Harm[15]	%	Source 1 phase C current fifteenth harmonic
00042851	SRC 1 Ic Harm[16]	%	Source 1 phase C current sixteenth harmonic
00042852	SRC 1 Ic Harm[17]	%	Source 1 phase C current seventeenth harmonic
00042853	SRC 1 Ic Harm[18]	%	Source 1 phase C current eighteenth harmonic
00042854	SRC 1 Ic Harm[19]	%	Source 1 phase C current nineteenth harmonic
00042855	SRC 1 Ic Harm[20]	%	Source 1 phase C current twentieth harmonic
00042856	SRC 1 Ic Harm[21]	%	Source 1 phase C current twenty-first harmonic
00042857	SRC 1 Ic Harm[22]	%	Source 1 phase C current twenty-second harmonic
00042858	SRC 1 Ic Harm[23]	%	Source 1 phase C current twenty-third harmonic
00042859	SRC 1 Ic Harm[24]	%	Source 1 phase C current twenty-fourth harmonic
0004285A	SRC 1 Ic Harm[25]	%	Source 1 phase C current twenty-fifth harmonic
00042863	SRC 2 Ia THD	%	Source 2 phase A current total harmonic distortion
00042864	SRC 2 Ia Harm[2]	%	Source 2 phase A current second harmonic
00042865	SRC 2 Ia Harm[3]	%	Source 2 phase A current third harmonic
00042866	SRC 2 Ia Harm[4]	%	Source 2 phase A current fourth harmonic
00042867	SRC 2 Ia Harm[5]	%	Source 2 phase A current fifth harmonic
00042868	SRC 2 Ia Harm[6]	%	Source 2 phase A current sixth harmonic
00042869	SRC 2 Ia Harm[7]	%	Source 2 phase A current seventh harmonic
0004286A	SRC 2 Ia Harm[8]	%	Source 2 phase A current eighth harmonic
0004286B	SRC 2 Ia Harm[9]	%	Source 2 phase A current ninth harmonic
0004286C	SRC 2 Ia Harm[10]	%	Source 2 phase A current tenth harmonic
0004286D	SRC 2 Ia Harm[11]	%	Source 2 phase A current eleventh harmonic
0004286E	SRC 2 Ia Harm[12]	%	Source 2 phase A current twelfth harmonic
0004286F	SRC 2 Ia Harm[13]	%	Source 2 phase A current thirteenth harmonic

A

Hex address	FlexAnalog name	Units	Description
00042870	SRC 2 Ia Harm[14]	%	Source 2 phase A current fourteenth harmonic
00042871	SRC 2 Ia Harm[15]	%	Source 2 phase A current fifteenth harmonic
00042872	SRC 2 Ia Harm[16]	%	Source 2 phase A current sixteenth harmonic
00042873	SRC 2 Ia Harm[17]	%	Source 2 phase A current seventeenth harmonic
00042874	SRC 2 Ia Harm[18]	%	Source 2 phase A current eighteenth harmonic
00042875	SRC 2 Ia Harm[19]	%	Source 2 phase A current nineteenth harmonic
00042876	SRC 2 Ia Harm[20]	%	Source 2 phase A current twentieth harmonic
00042877	SRC 2 Ia Harm[21]	%	Source 2 phase A current twenty-first harmonic
00042878	SRC 2 Ia Harm[22]	%	Source 2 phase A current twenty-second harmonic
00042879	SRC 2 Ia Harm[23]	%	Source 2 phase A current twenty-third harmonic
0004287A	SRC 2 Ia Harm[24]	%	Source 2 phase A current twenty-fourth harmonic
0004287B	SRC 2 Ia Harm[25]	%	Source 2 phase A current twenty-fifth harmonic
00042884	SRC 2 Ib THD	%	Source 2 phase B current total harmonic distortion
00042885	SRC 2 Ib Harm[2]	%	Source 2 phase B current second harmonic
00042886	SRC 2 Ib Harm[3]	%	Source 2 phase B current third harmonic
00042887	SRC 2 Ib Harm[4]	%	Source 2 phase B current fourth harmonic
00042888	SRC 2 Ib Harm[5]	%	Source 2 phase B current fifth harmonic
00042889	SRC 2 Ib Harm[6]	%	Source 2 phase B current sixth harmonic
0004288A	SRC 2 Ib Harm[7]	%	Source 2 phase B current seventh harmonic
0004288B	SRC 2 Ib Harm[8]	%	Source 2 phase B current eighth harmonic
0004288C	SRC 2 Ib Harm[9]	%	Source 2 phase B current ninth harmonic
0004288D	SRC 2 Ib Harm[10]	%	Source 2 phase B current tenth harmonic
0004288E	SRC 2 Ib Harm[11]	%	Source 2 phase B current eleventh harmonic
0004288F	SRC 2 Ib Harm[12]	%	Source 2 phase B current twelfth harmonic
00042890	SRC 2 Ib Harm[13]	%	Source 2 phase B current thirteenth harmonic
00042891	SRC 2 Ib Harm[14]	%	Source 2 phase B current fourteenth harmonic
00042892	SRC 2 Ib Harm[15]	%	Source 2 phase B current fifteenth harmonic
00042893	SRC 2 Ib Harm[16]	%	Source 2 phase B current sixteenth harmonic
00042894	SRC 2 Ib Harm[17]	%	Source 2 phase B current seventeenth harmonic
00042895	SRC 2 Ib Harm[18]	%	Source 2 phase B current eighteenth harmonic
00042896	SRC 2 Ib Harm[19]	%	Source 2 phase B current nineteenth harmonic
00042897	SRC 2 Ib Harm[20]	%	Source 2 phase B current twentieth harmonic
00042898	SRC 2 Ib Harm[21]	%	Source 2 phase B current twenty-first harmonic
00042899	SRC 2 Ib Harm[22]	%	Source 2 phase B current twenty-second harmonic
0004289A	SRC 2 Ib Harm[23]	%	Source 2 phase B current twenty-third harmonic
0004289B	SRC 2 Ib Harm[24]	%	Source 2 phase B current twenty-fourth harmonic
0004289C	SRC 2 Ib Harm[25]	%	Source 2 phase B current twenty-fifth harmonic
000428A5	SRC 2 Ic THD	%	Source 2 phase C current total harmonic distortion
000428A6	SRC 2 Ic Harm[2]	%	Source 2 phase C current second harmonic
000428A7	SRC 2 Ic Harm[3]	%	Source 2 phase C current third harmonic
000428A8	SRC 2 Ic Harm[4]	%	Source 2 phase C current fourth harmonic
000428A9	SRC 2 Ic Harm[5]	%	Source 2 phase C current fifth harmonic
000428AA	SRC 2 Ic Harm[6]	%	Source 2 phase C current sixth harmonic
000428AB	SRC 2 Ic Harm[7]	%	Source 2 phase C current seventh harmonic
000428AC	SRC 2 Ic Harm[8]	%	Source 2 phase C current eighth harmonic
000428AD	SRC 2 Ic Harm[9]	%	Source 2 phase C current ninth harmonic
000428AE	SRC 2 Ic Harm[10]	%	Source 2 phase C current tenth harmonic

A

Hex address	FlexAnalog name	Units	Description
000428AF	SRC 2 Ic Harm[11]	%	Source 2 phase C current eleventh harmonic
000428B0	SRC 2 Ic Harm[12]	%	Source 2 phase C current twelfth harmonic
000428B1	SRC 2 Ic Harm[13]	%	Source 2 phase C current thirteenth harmonic
000428B2	SRC 2 Ic Harm[14]	%	Source 2 phase C current fourteenth harmonic
000428B3	SRC 2 Ic Harm[15]	%	Source 2 phase C current fifteenth harmonic
000428B4	SRC 2 Ic Harm[16]	%	Source 2 phase C current sixteenth harmonic
000428B5	SRC 2 Ic Harm[17]	%	Source 2 phase C current seventeenth harmonic
000428B6	SRC 2 Ic Harm[18]	%	Source 2 phase C current eighteenth harmonic
000428B7	SRC 2 Ic Harm[19]	%	Source 2 phase C current nineteenth harmonic
000428B8	SRC 2 Ic Harm[20]	%	Source 2 phase C current twentieth harmonic
000428B9	SRC 2 Ic Harm[21]	%	Source 2 phase C current twenty-first harmonic
000428BA	SRC 2 Ic Harm[22]	%	Source 2 phase C current twenty-second harmonic
000428BB	SRC 2 Ic Harm[23]	%	Source 2 phase C current twenty-third harmonic
000428BC	SRC 2 Ic Harm[24]	%	Source 2 phase C current twenty-fourth harmonic
000428BD	SRC 2 Ic Harm[25]	%	Source 2 phase C current twenty-fifth harmonic
000428C6	SRC 3 Ia THD	%	Source 3 phase A current total harmonic distortion
000428C7	SRC 3 Ia Harm[2]	%	Source 3 phase A current second harmonic
000428C8	SRC 3 Ia Harm[3]	%	Source 3 phase A current third harmonic
000428C9	SRC 3 Ia Harm[4]	%	Source 3 phase A current fourth harmonic
000428CA	SRC 3 Ia Harm[5]	%	Source 3 phase A current fifth harmonic
000428CB	SRC 3 Ia Harm[6]	%	Source 3 phase A current sixth harmonic
000428CC	SRC 3 Ia Harm[7]	%	Source 3 phase A current seventh harmonic
000428CD	SRC 3 Ia Harm[8]	%	Source 3 phase A current eighth harmonic
000428CE	SRC 3 Ia Harm[9]	%	Source 3 phase A current ninth harmonic
000428CF	SRC 3 Ia Harm[10]	%	Source 3 phase A current tenth harmonic
000428D0	SRC 3 Ia Harm[11]	%	Source 3 phase A current eleventh harmonic
000428D1	SRC 3 Ia Harm[12]	%	Source 3 phase A current twelfth harmonic
000428D2	SRC 3 Ia Harm[13]	%	Source 3 phase A current thirteenth harmonic
000428D3	SRC 3 Ia Harm[14]	%	Source 3 phase A current fourteenth harmonic
000428D4	SRC 3 Ia Harm[15]	%	Source 3 phase A current fifteenth harmonic
000428D5	SRC 3 Ia Harm[16]	%	Source 3 phase A current sixteenth harmonic
000428D6	SRC 3 Ia Harm[17]	%	Source 3 phase A current seventeenth harmonic
000428D7	SRC 3 Ia Harm[18]	%	Source 3 phase A current eighteenth harmonic
000428D8	SRC 3 Ia Harm[19]	%	Source 3 phase A current nineteenth harmonic
000428D9	SRC 3 Ia Harm[20]	%	Source 3 phase A current twentieth harmonic
000428DA	SRC 3 Ia Harm[21]	%	Source 3 phase A current twenty-first harmonic
000428DB	SRC 3 Ia Harm[22]	%	Source 3 phase A current twenty-second harmonic
000428DC	SRC 3 Ia Harm[23]	%	Source 3 phase A current twenty-third harmonic
000428DD	SRC 3 Ia Harm[24]	%	Source 3 phase A current twenty-fourth harmonic
000428DE	SRC 3 Ia Harm[25]	%	Source 3 phase A current twenty-fifth harmonic
000428E7	SRC 3 Ib THD	%	Source 3 phase B current total harmonic distortion
000428E8	SRC 3 Ib Harm[2]	%	Source 3 phase B current second harmonic
000428E9	SRC 3 Ib Harm[3]	%	Source 3 phase B current third harmonic
000428EA	SRC 3 Ib Harm[4]	%	Source 3 phase B current fourth harmonic
000428EB	SRC 3 Ib Harm[5]	%	Source 3 phase B current fifth harmonic
000428EC	SRC 3 Ib Harm[6]	%	Source 3 phase B current sixth harmonic
000428ED	SRC 3 Ib Harm[7]	%	Source 3 phase B current seventh harmonic

A

Hex address	FlexAnalog name	Units	Description
000428EE	SRC 3 Ib Harm[8]	%	Source 3 phase B current eighth harmonic
000428EF	SRC 3 Ib Harm[9]	%	Source 3 phase B current ninth harmonic
000428F0	SRC 3 Ib Harm[10]	%	Source 3 phase B current tenth harmonic
000428F1	SRC 3 Ib Harm[11]	%	Source 3 phase B current eleventh harmonic
000428F2	SRC 3 Ib Harm[12]	%	Source 3 phase B current twelfth harmonic
000428F3	SRC 3 Ib Harm[13]	%	Source 3 phase B current thirteenth harmonic
000428F4	SRC 3 Ib Harm[14]	%	Source 3 phase B current fourteenth harmonic
000428F5	SRC 3 Ib Harm[15]	%	Source 3 phase B current fifteenth harmonic
000428F6	SRC 3 Ib Harm[16]	%	Source 3 phase B current sixteenth harmonic
000428F7	SRC 3 Ib Harm[17]	%	Source 3 phase B current seventeenth harmonic
000428F8	SRC 3 Ib Harm[18]	%	Source 3 phase B current eighteenth harmonic
000428F9	SRC 3 Ib Harm[19]	%	Source 3 phase B current nineteenth harmonic
000428FA	SRC 3 Ib Harm[20]	%	Source 3 phase B current twentieth harmonic
000428FB	SRC 3 Ib Harm[21]	%	Source 3 phase B current twenty-first harmonic
000428FC	SRC 3 Ib Harm[22]	%	Source 3 phase B current twenty-second harmonic
000428FD	SRC 3 Ib Harm[23]	%	Source 3 phase B current twenty-third harmonic
000428FE	SRC 3 Ib Harm[24]	%	Source 3 phase B current twenty-fourth harmonic
000428FF	SRC 3 Ib Harm[25]	%	Source 3 phase B current twenty-fifth harmonic
00042908	SRC 3 Ic THD	%	Source 3 phase C current total harmonic distortion
00042909	SRC 3 Ic Harm[2]	%	Source 3 phase C current second harmonic
0004290A	SRC 3 Ic Harm[3]	%	Source 3 phase C current third harmonic
0004290B	SRC 3 Ic Harm[4]	%	Source 3 phase C current fourth harmonic
0004290C	SRC 3 Ic Harm[5]	%	Source 3 phase C current fifth harmonic
0004290D	SRC 3 Ic Harm[6]	%	Source 3 phase C current sixth harmonic
0004290E	SRC 3 Ic Harm[7]	%	Source 3 phase C current seventh harmonic
0004290F	SRC 3 Ic Harm[8]	%	Source 3 phase C current eighth harmonic
00042910	SRC 3 Ic Harm[9]	%	Source 3 phase C current ninth harmonic
00042911	SRC 3 Ic Harm[10]	%	Source 3 phase C current tenth harmonic
00042912	SRC 3 Ic Harm[11]	%	Source 3 phase C current eleventh harmonic
00042913	SRC 3 Ic Harm[12]	%	Source 3 phase C current twelfth harmonic
00042914	SRC 3 Ic Harm[13]	%	Source 3 phase C current thirteenth harmonic
00042915	SRC 3 Ic Harm[14]	%	Source 3 phase C current fourteenth harmonic
00042916	SRC 3 Ic Harm[15]	%	Source 3 phase C current fifteenth harmonic
00042917	SRC 3 Ic Harm[16]	%	Source 3 phase C current sixteenth harmonic
00042918	SRC 3 Ic Harm[17]	%	Source 3 phase C current seventeenth harmonic
00042919	SRC 3 Ic Harm[18]	%	Source 3 phase C current eighteenth harmonic
0004291A	SRC 3 Ic Harm[19]	%	Source 3 phase C current nineteenth harmonic
0004291B	SRC 3 Ic Harm[20]	%	Source 3 phase C current twentieth harmonic
0004291C	SRC 3 Ic Harm[21]	%	Source 3 phase C current twenty-first harmonic
0004291D	SRC 3 Ic Harm[22]	%	Source 3 phase C current twenty-second harmonic
0004291E	SRC 3 Ic Harm[23]	%	Source 3 phase C current twenty-third harmonic
000429!F	SRC 3 Ic Harm[24]	%	Source 3 phase C current twenty-fourth harmonic
00042920	SRC 3 Ic Harm[25]	%	Source 3 phase C current twenty-fifth harmonic
00042929	SRC 4 Ia THD	%	Source 4 phase A current total harmonic distortion
0004292A	SRC 4 Ia Harm[2]	%	Source 4 phase A current second harmonic
0004292B	SRC 4 Ia Harm[3]	%	Source 4 phase A current third harmonic
0004292C	SRC 4 Ia Harm[4]	%	Source 4 phase A current fourth harmonic

A

Hex address	FlexAnalog name	Units	Description
0004292D	SRC 4 Ia Harm[5]	%	Source 4 phase A current fifth harmonic
0004292E	SRC 4 Ia Harm[6]	%	Source 4 phase A current sixth harmonic
0004292F	SRC 4 Ia Harm[7]	%	Source 4 phase A current seventh harmonic
00042930	SRC 4 Ia Harm[8]	%	Source 4 phase A current eighth harmonic
00042931	SRC 4 Ia Harm[9]	%	Source 4 phase A current ninth harmonic
00042932	SRC 4 Ia Harm[10]	%	Source 4 phase A current tenth harmonic
00042933	SRC 4 Ia Harm[11]	%	Source 4 phase A current eleventh harmonic
00042934	SRC 4 Ia Harm[12]	%	Source 4 phase A current twelfth harmonic
00042935	SRC 4 Ia Harm[13]	%	Source 4 phase A current thirteenth harmonic
00042936	SRC 4 Ia Harm[14]	%	Source 4 phase A current fourteenth harmonic
00042937	SRC 4 Ia Harm[15]	%	Source 4 phase A current fifteenth harmonic
00042938	SRC 4 Ia Harm[16]	%	Source 4 phase A current sixteenth harmonic
00042939	SRC 4 Ia Harm[17]	%	Source 4 phase A current seventeenth harmonic
0004293A	SRC 4 Ia Harm[18]	%	Source 4 phase A current eighteenth harmonic
0004293B	SRC 4 Ia Harm[19]	%	Source 4 phase A current nineteenth harmonic
0004293C	SRC 4 Ia Harm[20]	%	Source 4 phase A current twentieth harmonic
0004293D	SRC 4 Ia Harm[21]	%	Source 4 phase A current twenty-first harmonic
0004293E	SRC 4 Ia Harm[22]	%	Source 4 phase A current twenty-second harmonic
0004293F	SRC 4 Ia Harm[23]	%	Source 4 phase A current twenty-third harmonic
00042940	SRC 4 Ia Harm[24]	%	Source 4 phase A current twenty-fourth harmonic
00042941	SRC 4 Ia Harm[25]	%	Source 4 phase A current twenty-fifth harmonic
0004294A	SRC 4 Ib THD	%	Source 4 phase B current total harmonic distortion
0004294B	SRC 4 Ib Harm[2]	%	Source 4 phase B current second harmonic
0004294C	SRC 4 Ib Harm[3]	%	Source 4 phase B current third harmonic
0004294D	SRC 4 Ib Harm[4]	%	Source 4 phase B current fourth harmonic
0004294E	SRC 4 Ib Harm[5]	%	Source 4 phase B current fifth harmonic
0004294F	SRC 4 Ib Harm[6]	%	Source 4 phase B current sixth harmonic
00042950	SRC 4 Ib Harm[7]	%	Source 4 phase B current seventh harmonic
00042951	SRC 4 Ib Harm[8]	%	Source 4 phase B current eighth harmonic
00042952	SRC 4 Ib Harm[9]	%	Source 4 phase B current ninth harmonic
00042953	SRC 4 Ib Harm[10]	%	Source 4 phase B current tenth harmonic
00042954	SRC 4 Ib Harm[11]	%	Source 4 phase B current eleventh harmonic
00042955	SRC 4 Ib Harm[12]	%	Source 4 phase B current twelfth harmonic
00042956	SRC 4 Ib Harm[13]	%	Source 4 phase B current thirteenth harmonic
00042957	SRC 4 Ib Harm[14]	%	Source 4 phase B current fourteenth harmonic
00042958	SRC 4 Ib Harm[15]	%	Source 4 phase B current fifteenth harmonic
00042959	SRC 4 Ib Harm[16]	%	Source 4 phase B current sixteenth harmonic
0004295A	SRC 4 Ib Harm[17]	%	Source 4 phase B current seventeenth harmonic
0004295B	SRC 4 Ib Harm[18]	%	Source 4 phase B current eighteenth harmonic
0004295C	SRC 4 Ib Harm[19]	%	Source 4 phase B current nineteenth harmonic
0004295D	SRC 4 Ib Harm[20]	%	Source 4 phase B current twentieth harmonic
0004295E	SRC 4 Ib Harm[21]	%	Source 4 phase B current twenty-first harmonic
0004295F	SRC 4 Ib Harm[22]	%	Source 4 phase B current twenty-second harmonic
00042960	SRC 4 Ib Harm[23]	%	Source 4 phase B current twenty-third harmonic
00042961	SRC 4 Ib Harm[24]	%	Source 4 phase B current twenty-fourth harmonic
00042962	SRC 4 Ib Harm[25]	%	Source 4 phase B current twenty-fifth harmonic
0004296B	SRC 4 Ic THD	%	Source 4 phase C current total harmonic distortion

A

Hex address	FlexAnalog name	Units	Description
0004296C	SRC 4 Ic Harm[2]	%	Source 4 phase C current second harmonic
0004296D	SRC 4 Ic Harm[3]	%	Source 4 phase C current third harmonic
0004296E	SRC 4 Ic Harm[4]	%	Source 4 phase C current fourth harmonic
0004296F	SRC 4 Ic Harm[5]	%	Source 4 phase C current fifth harmonic
00042970	SRC 4 Ic Harm[6]	%	Source 4 phase C current sixth harmonic
00042971	SRC 4 Ic Harm[7]	%	Source 4 phase C current seventh harmonic
00042972	SRC 4 Ic Harm[8]	%	Source 4 phase C current eighth harmonic
00042973	SRC 4 Ic Harm[9]	%	Source 4 phase C current ninth harmonic
00042974	SRC 4 Ic Harm[10]	%	Source 4 phase C current tenth harmonic
00042975	SRC 4 Ic Harm[11]	%	Source 4 phase C current eleventh harmonic
00042976	SRC 4 Ic Harm[12]	%	Source 4 phase C current twelfth harmonic
00042977	SRC 4 Ic Harm[13]	%	Source 4 phase C current thirteenth harmonic
00042978	SRC 4 Ic Harm[14]	%	Source 4 phase C current fourteenth harmonic
00042979	SRC 4 Ic Harm[15]	%	Source 4 phase C current fifteenth harmonic
0004297A	SRC 4 Ic Harm[16]	%	Source 4 phase C current sixteenth harmonic
0004297B	SRC 4 Ic Harm[17]	%	Source 4 phase C current seventeenth harmonic
0004297C	SRC 4 Ic Harm[18]	%	Source 4 phase C current eighteenth harmonic
0004297D	SRC 4 Ic Harm[19]	%	Source 4 phase C current nineteenth harmonic
0004297E	SRC 4 Ic Harm[20]	%	Source 4 phase C current twentieth harmonic
0004297F	SRC 4 Ic Harm[21]	%	Source 4 phase C current twenty-first harmonic
00042980	SRC 4 Ic Harm[22]	%	Source 4 phase C current twenty-second harmonic
00042981	SRC 4 Ic Harm[23]	%	Source 4 phase C current twenty-third harmonic
00042982	SRC 4 Ic Harm[24]	%	Source 4 phase C current twenty-fourth harmonic
00042983	SRC 4 Ic Harm[25]	%	Source 4 phase C current twenty-fifth harmonic
0004298C	SRC 5 Ia THD	%	Source 5 phase A current total harmonic distortion
0004298D	SRC 5 Ia Harm[2]	%	Source 5 phase A current second harmonic
0004298E	SRC 5 Ia Harm[3]	%	Source 5 phase A current third harmonic
0004298F	SRC 5 Ia Harm[4]	%	Source 5 phase A current fourth harmonic
00042990	SRC 5 Ia Harm[5]	%	Source 5 phase A current fifth harmonic
00042991	SRC 5 Ia Harm[6]	%	Source 5 phase A current sixth harmonic
00042992	SRC 5 Ia Harm[7]	%	Source 5 phase A current seventh harmonic
00042993	SRC 5 Ia Harm[8]	%	Source 5 phase A current eighth harmonic
00042994	SRC 5 Ia Harm[9]	%	Source 5 phase A current ninth harmonic
00042995	SRC 5 Ia Harm[10]	%	Source 5 phase A current tenth harmonic
00042996	SRC 5 Ia Harm[11]	%	Source 5 phase A current eleventh harmonic
00042997	SRC 5 Ia Harm[12]	%	Source 5 phase A current twelfth harmonic
00042998	SRC 5 Ia Harm[13]	%	Source 5 phase A current thirteenth harmonic
00042999	SRC 5 Ia Harm[14]	%	Source 5 phase A current fourteenth harmonic
0004299A	SRC 5 Ia Harm[15]	%	Source 5 phase A current fifteenth harmonic
0004299B	SRC 5 Ia Harm[16]	%	Source 5 phase A current sixteenth harmonic
0004299C	SRC 5 Ia Harm[17]	%	Source 5 phase A current seventeenth harmonic
0004299D	SRC 5 Ia Harm[18]	%	Source 5 phase A current eighteenth harmonic
0004299E	SRC 5 Ia Harm[19]	%	Source 5 phase A current nineteenth harmonic
0004299F	SRC 5 Ia Harm[20]	%	Source 5 phase A current twentieth harmonic
000429A0	SRC 5 Ia Harm[21]	%	Source 5 phase A current twenty-first harmonic
000429A1	SRC 5 Ia Harm[22]	%	Source 5 phase A current twenty-second harmonic
000429A2	SRC 5 Ia Harm[23]	%	Source 5 phase A current twenty-third harmonic

A

Hex address	FlexAnalog name	Units	Description
000429A3	SRC 5 Ia Harm[24]	%	Source 5 phase A current twenty-fourth harmonic
000429A4	SRC 5 Ia Harm[25]	%	Source 5 phase A current twenty-fifth harmonic
000429AD	SRC 5 Ib THD	%	Source 5 phase B current total harmonic distortion
000429AE	SRC 5 Ib Harm[2]	%	Source 5 phase B current second harmonic
000429AF	SRC 5 Ib Harm[3]	%	Source 5 phase B current third harmonic
000429B0	SRC 5 Ib Harm[4]	%	Source 5 phase B current fourth harmonic
000429B1	SRC 5 Ib Harm[5]	%	Source 5 phase B current fifth harmonic
000429B2	SRC 5 Ib Harm[6]	%	Source 5 phase B current sixth harmonic
000429B3	SRC 5 Ib Harm[7]	%	Source 5 phase B current seventh harmonic
000429B4	SRC 5 Ib Harm[8]	%	Source 5 phase B current eighth harmonic
000429B5	SRC 5 Ib Harm[9]	%	Source 5 phase B current ninth harmonic
000429B6	SRC 5 Ib Harm[10]	%	Source 5 phase B current tenth harmonic
000429B7	SRC 5 Ib Harm[11]	%	Source 5 phase B current eleventh harmonic
000429B8	SRC 5 Ib Harm[12]	%	Source 5 phase B current twelfth harmonic
000429B9	SRC 5 Ib Harm[13]	%	Source 5 phase B current thirteenth harmonic
000429BA	SRC 5 Ib Harm[14]	%	Source 5 phase B current fourteenth harmonic
000429BB	SRC 5 Ib Harm[15]	%	Source 5 phase B current fifteenth harmonic
000429BC	SRC 5 Ib Harm[16]	%	Source 5 phase B current sixteenth harmonic
000429BD	SRC 5 Ib Harm[17]	%	Source 5 phase B current seventeenth harmonic
000429BE	SRC 5 Ib Harm[18]	%	Source 5 phase B current eighteenth harmonic
000429BF	SRC 5 Ib Harm[19]	%	Source 5 phase B current nineteenth harmonic
000429C0	SRC 5 Ib Harm[20]	%	Source 5 phase B current twentieth harmonic
000429C1	SRC 5 Ib Harm[21]	%	Source 5 phase B current twenty-first harmonic
000429C2	SRC 5 Ib Harm[22]	%	Source 5 phase B current twenty-second harmonic
000429C3	SRC 5 Ib Harm[23]	%	Source 5 phase B current twenty-third harmonic
000429C4	SRC 5 Ib Harm[24]	%	Source 5 phase B current twenty-fourth harmonic
000429C5	SRC 5 Ib Harm[25]	%	Source 5 phase B current twenty-fifth harmonic
000429CE	SRC 5 Ic THD	%	Source 5 phase C current total harmonic distortion
000429CF	SRC 5 Ic Harm[2]	%	Source 5 phase C current second harmonic
000429D0	SRC 5 Ic Harm[3]	%	Source 5 phase C current third harmonic
000429D1	SRC 5 Ic Harm[4]	%	Source 5 phase C current fourth harmonic
000429D2	SRC 5 Ic Harm[5]	%	Source 5 phase C current fifth harmonic
000429D3	SRC 5 Ic Harm[6]	%	Source 5 phase C current sixth harmonic
000429D4	SRC 5 Ic Harm[7]	%	Source 5 phase C current seventh harmonic
000429D5	SRC 5 Ic Harm[8]	%	Source 5 phase C current eighth harmonic
000429D6	SRC 5 Ic Harm[9]	%	Source 5 phase C current ninth harmonic
000429D7	SRC 5 Ic Harm[10]	%	Source 5 phase C current tenth harmonic
000429D8	SRC 5 Ic Harm[11]	%	Source 5 phase C current eleventh harmonic
000429D9	SRC 5 Ic Harm[12]	%	Source 5 phase C current twelfth harmonic
000429DA	SRC 5 Ic Harm[13]	%	Source 5 phase C current thirteenth harmonic
000429DB	SRC 5 Ic Harm[14]	%	Source 5 phase C current fourteenth harmonic
000429DC	SRC 5 Ic Harm[15]	%	Source 5 phase C current fifteenth harmonic
000429DD	SRC 5 Ic Harm[16]	%	Source 5 phase C current sixteenth harmonic
000429DE	SRC 5 Ic Harm[17]	%	Source 5 phase C current seventeenth harmonic
000429DF	SRC 5 Ic Harm[18]	%	Source 5 phase C current eighteenth harmonic
000429E0	SRC 5 Ic Harm[19]	%	Source 5 phase C current nineteenth harmonic
000429E1	SRC 5 Ic Harm[20]	%	Source 5 phase C current twentieth harmonic

A

Hex address	FlexAnalog name	Units	Description
000429E2	SRC 5 Ic Harm[21]	%	Source 5 phase C current twenty-first harmonic
000429E3	SRC 5 Ic Harm[22]	%	Source 5 phase C current twenty-second harmonic
000429E4	SRC 5 Ic Harm[23]	%	Source 5 phase C current twenty-third harmonic
000429E5	SRC 5 Ic Harm[24]	%	Source 5 phase C current twenty-fourth harmonic
000429E6	SRC 5 Ic Harm[25]	%	Source 5 phase C current twenty-fifth harmonic
000429EF	SRC 6 Ia THD	%	Source 6 phase A current total harmonic distortion
000429F0	SRC 6 Ia Harm[2]	%	Source 6 phase A current second harmonic
000429F1	SRC 6 Ia Harm[3]	%	Source 6 phase A current third harmonic
000429F2	SRC 6 Ia Harm[4]	%	Source 6 phase A current fourth harmonic
000429F3	SRC 6 Ia Harm[5]	%	Source 6 phase A current fifth harmonic
000429F4	SRC 6 Ia Harm[6]	%	Source 6 phase A current sixth harmonic
000429F5	SRC 6 Ia Harm[7]	%	Source 6 phase A current seventh harmonic
000429F6	SRC 6 Ia Harm[8]	%	Source 6 phase A current eighth harmonic
000429F7	SRC 6 Ia Harm[9]	%	Source 6 phase A current ninth harmonic
000429F8	SRC 6 Ia Harm[10]	%	Source 6 phase A current tenth harmonic
000429F9	SRC 6 Ia Harm[11]	%	Source 6 phase A current eleventh harmonic
000429FA	SRC 6 Ia Harm[12]	%	Source 6 phase A current twelfth harmonic
000429FB	SRC 6 Ia Harm[13]	%	Source 6 phase A current thirteenth harmonic
000429FC	SRC 6 Ia Harm[14]	%	Source 6 phase A current fourteenth harmonic
000429FD	SRC 6 Ia Harm[15]	%	Source 6 phase A current fifteenth harmonic
000429FE	SRC 6 Ia Harm[16]	%	Source 6 phase A current sixteenth harmonic
000429FF	SRC 6 Ia Harm[17]	%	Source 6 phase A current seventeenth harmonic
00042A00	SRC 6 Ia Harm[18]	%	Source 6 phase A current eighteenth harmonic
00042A01	SRC 6 Ia Harm[19]	%	Source 6 phase A current nineteenth harmonic
000420A2	SRC 6 Ia Harm[20]	%	Source 6 phase A current twentieth harmonic
000420A3	SRC 6 Ia Harm[21]	%	Source 6 phase A current twenty-first harmonic
000420A4	SRC 6 Ia Harm[22]	%	Source 6 phase A current twenty-second harmonic
000420A5	SRC 6 Ia Harm[23]	%	Source 6 phase A current twenty-third harmonic
000420A6	SRC 6 Ia Harm[24]	%	Source 6 phase A current twenty-fourth harmonic
000420A7	SRC 6 Ia Harm[25]	%	Source 6 phase A current twenty-fifth harmonic
00042A10	SRC 6 Ib THD	%	Source 6 phase B current total harmonic distortion
00042A11	SRC 6 Ib Harm[2]	%	Source 6 phase B current second harmonic
00042A12	SRC 6 Ib Harm[3]	%	Source 6 phase B current third harmonic
00042A13	SRC 6 Ib Harm[4]	%	Source 6 phase B current fourth harmonic
00042A14	SRC 6 Ib Harm[5]	%	Source 6 phase B current fifth harmonic
00042A15	SRC 6 Ib Harm[6]	%	Source 6 phase B current sixth harmonic
00042A16	SRC 6 Ib Harm[7]	%	Source 6 phase B current seventh harmonic
00042A17	SRC 6 Ib Harm[8]	%	Source 6 phase B current eighth harmonic
00042A18	SRC 6 Ib Harm[9]	%	Source 6 phase B current ninth harmonic
00042A19	SRC 6 Ib Harm[10]	%	Source 6 phase B current tenth harmonic
00042A1A	SRC 6 Ib Harm[11]	%	Source 6 phase B current eleventh harmonic
00042A1B	SRC 6 Ib Harm[12]	%	Source 6 phase B current twelfth harmonic
00042A1C	SRC 6 Ib Harm[13]	%	Source 6 phase B current thirteenth harmonic
00042A1D	SRC 6 Ib Harm[14]	%	Source 6 phase B current fourteenth harmonic
00042A1E	SRC 6 Ib Harm[15]	%	Source 6 phase B current fifteenth harmonic
00042A1F	SRC 6 Ib Harm[16]	%	Source 6 phase B current sixteenth harmonic
00042A20	SRC 6 Ib Harm[17]	%	Source 6 phase B current seventeenth harmonic

A

Hex address	FlexAnalog name	Units	Description
00042A21	SRC 6 Ib Harm[18]	%	Source 6 phase B current eighteenth harmonic
00042A22	SRC 6 Ib Harm[19]	%	Source 6 phase B current nineteenth harmonic
00042A23	SRC 6 Ib Harm[20]	%	Source 6 phase B current twentieth harmonic
00042A24	SRC 6 Ib Harm[21]	%	Source 6 phase B current twenty-first harmonic
00042A25	SRC 6 Ib Harm[22]	%	Source 6 phase B current twenty-second harmonic
00042A26	SRC 6 Ib Harm[23]	%	Source 6 phase B current twenty-third harmonic
00042A27	SRC 6 Ib Harm[24]	%	Source 6 phase B current twenty-fourth harmonic
00042A28	SRC 6 Ib Harm[25]	%	Source 6 phase B current twenty-fifth harmonic
00042A31	SRC 6 Ic THD	%	Source 6 phase C current total harmonic distortion
00042A32	SRC 6 Ic Harm[2]	%	Source 6 phase C current second harmonic
00042A33	SRC 6 Ic Harm[3]	%	Source 6 phase C current third harmonic
00042A34	SRC 6 Ic Harm[4]	%	Source 6 phase C current fourth harmonic
00042A35	SRC 6 Ic Harm[5]	%	Source 6 phase C current fifth harmonic
00042A36	SRC 6 Ic Harm[6]	%	Source 6 phase C current sixth harmonic
00042A37	SRC 6 Ic Harm[7]	%	Source 6 phase C current seventh harmonic
00042A38	SRC 6 Ic Harm[8]	%	Source 6 phase C current eighth harmonic
00042A39	SRC 6 Ic Harm[9]	%	Source 6 phase C current ninth harmonic
00042A3A	SRC 6 Ic Harm[10]	%	Source 6 phase C current tenth harmonic
00042A3B	SRC 6 Ic Harm[11]	%	Source 6 phase C current eleventh harmonic
00042A3C	SRC 6 Ic Harm[12]	%	Source 6 phase C current twelfth harmonic
00042A3D	SRC 6 Ic Harm[13]	%	Source 6 phase C current thirteenth harmonic
00042A3E	SRC 6 Ic Harm[14]	%	Source 6 phase C current fourteenth harmonic
00042A3F	SRC 6 Ic Harm[15]	%	Source 6 phase C current fifteenth harmonic
00042A40	SRC 6 Ic Harm[16]	%	Source 6 phase C current sixteenth harmonic
00042A41	SRC 6 Ic Harm[17]	%	Source 6 phase C current seventeenth harmonic
00042A42	SRC 6 Ic Harm[18]	%	Source 6 phase C current eighteenth harmonic
00042A43	SRC 6 Ic Harm[19]	%	Source 6 phase C current nineteenth harmonic
00042A44	SRC 6 Ic Harm[20]	%	Source 6 phase C current twentieth harmonic
00042A45	SRC 6 Ic Harm[21]	%	Source 6 phase C current twenty-first harmonic
00042A46	SRC 6 Ic Harm[22]	%	Source 6 phase C current twenty-second harmonic
00042A47	SRC 6 Ic Harm[23]	%	Source 6 phase C current twenty-third harmonic
00042A48	SRC 6 Ic Harm[24]	%	Source 6 phase C current twenty-fourth harmonic
00042A49	SRC 6 Ic Harm[25]	%	Source 6 phase C current twenty-fifth harmonic
00043012	Oscill Num Triggers	---	Oscillography number of triggers
000434C0	DCmA Ip 1	mA	DCmA input 1 actual value
000434C2	DCmA Ip 2	mA	DCmA input 2 actual value
000434C4	DCmA Ip 3	mA	DCmA input 3 actual value
000434C6	DCmA Ip 4	mA	DCmA input 4 actual value
000434C8	DCmA Ip 5	mA	DCmA input 5 actual value
000434CA	DCmA Ip 6	mA	DCmA input 6 actual value
000434CC	DCmA Ip 7	mA	DCmA input 7 actual value
000434CE	DCmA Ip 8	mA	DCmA input 8 actual value
000434D0	DCmA Ip 9	mA	DCmA input 9 actual value
000434D2	DCmA Ip 10	mA	DCmA input 10 actual value
000434D4	DCmA Ip 11	mA	DCmA input 11 actual value
000434D6	DCmA Ip 12	mA	DCmA input 12 actual value
000434D8	DCmA Ip 13	mA	DCmA input 13 actual value

A

Hex address	FlexAnalog name	Units	Description
000434DA	DCmA Ip 14	mA	DCmA input 14 actual value
000434DC	DCmA Ip 15	mA	DCmA input 15 actual value
000434DE	DCmA Ip 16	mA	DCmA input 16 actual value
000434E0	DCmA Ip 17	mA	DCmA input 17 actual value
000434E2	DCmA Ip 18	mA	DCmA input 18 actual value
000434E4	DCmA Ip 19	mA	DCmA input 19 actual value
000434E6	DCmA Ip 20	mA	DCmA input 20 actual value
000434E8	DCmA Ip 21	mA	DCmA input 21 actual value
000434EA	DCmA Ip 22	mA	DCmA input 22 actual value
000434EC	DCmA Ip 23	mA	DCmA input 23 actual value
000434EE	DCmA Ip 24	mA	DCmA input 24 actual value
000434F0	RTD Ip 1	---	RTD input 1 actual value
000434F1	RTD Ip 2	---	RTD input 2 actual value
000434F2	RTD Ip 3	---	RTD input 3 actual value
000434F3	RTD Ip 4	---	RTD input 4 actual value
000434F4	RTD Ip 5	---	RTD input 5 actual value
000434F5	RTD Ip 6	---	RTD input 6 actual value
000434F6	RTD Ip 7	---	RTD input 7 actual value
000434F7	RTD Ip 8	---	RTD input 8 actual value
000434F8	RTD Ip 9	---	RTD input 9 actual value
000434F9	RTD Ip 10	---	RTD input 10 actual value
000434FA	RTD Ip 11	---	RTD input 11 actual value
000434FB	RTD Ip 12	---	RTD input 12 actual value
000434FC	RTD Ip 13	---	RTD input 13 actual value
000434FD	RTD Ip 14	---	RTD input 14 actual value
000434FE	RTD Ip 15	---	RTD input 15 actual value
000434FF	RTD Ip 16	---	RTD input 16 actual value
00043500	RTD Ip 17	---	RTD input 17 actual value
00043501	RTD Ip 18	---	RTD input 18 actual value
00043502	RTD Ip 19	---	RTD input 19 actual value
00043503	RTD Ip 20	---	RTD input 20 actual value
00043504	RTD Ip 21	---	RTD input 21 actual value
00043505	RTD Ip 22	---	RTD input 22 actual value
00043506	RTD Ip 23	---	RTD input 23 actual value
00043507	RTD Ip 24	---	RTD input 24 actual value
00043508	RTD Ip 25	---	RTD input 25 actual value
00043509	RTD Ip 26	---	RTD input 26 actual value
0004350A	RTD Ip 27	---	RTD input 27 actual value
0004350B	RTD Ip 28	---	RTD input 28 actual value
0004350C	RTD Ip 29	---	RTD input 29 actual value
0004350D	RTD Ip 30	---	RTD input 30 actual value
0004350E	RTD Ip 31	---	RTD input 31 actual value
0004350F	RTD Ip 32	---	RTD input 32 actual value
00043510	RTD Ip 33	---	RTD input 33 actual value
00043511	RTD Ip 34	---	RTD input 34 actual value
00043512	RTD Ip 35	---	RTD input 35 actual value
00043513	RTD Ip 36	---	RTD input 36 actual value

A

Hex address	FlexAnalog name	Units	Description
00043514	RTD Ip 37	---	RTD input 37 actual value
00043515	RTD Ip 38	---	RTD input 38 actual value
00043516	RTD Ip 39	---	RTD input 39 actual value
00043517	RTD Ip 40	---	RTD input 40 actual value
00043518	RTD Ip 41	---	RTD input 41 actual value
00043519	RTD Ip 42	---	RTD input 42 actual value
0004351A	RTD Ip 43	---	RTD input 43 actual value
0004351B	RTD Ip 44	---	RTD input 44 actual value
0004351C	RTD Ip 45	---	RTD input 45 actual value
0004351D	RTD Ip 46	---	RTD input 46 actual value
0004351E	RTD Ip 47	---	RTD input 47 actual value
0004351F	RTD Ip 48	---	RTD input 48 actual value
00043520	Ohm Inputs 1 Value	Ohms	Ohm inputs 1 value
00043521	Ohm Inputs 2 Value	Ohms	Ohm inputs 2 value
0043600	60P 1 Raw Idiff A	Amps	Phase current unbalance raw phase A differential current actual value
00043602	60P 1 Raw Idiff B	Amps	Phase current unbalance raw phase B differential current actual value
00043604	60P 1 Raw Idiff C	Amps	Phase current unbalance raw phase C differential current actual value
00043606	60P 1 Comp Iop A	Amps	Phase current unbalance composite phase A operating current actual value
00043608	60P 1 Comp Iop B	Amps	Phase current unbalance composite phase B operating current actual value
0004360A	60P 1 Comp Iop C	Amps	Phase current unbalance composite phase C operating current actual value
0004360C	60P 2 Raw Idiff A	pu	Phase current unbalance 2 raw phase A differential current actual value
0004360E	60P 2 Raw Idiff B	pu	Phase current unbalance 2 raw phase B differential current actual value
00043610	60P 2 Raw Idiff C	pu	Phase current unbalance 2 raw phase C differential current actual value
00043612	60P 2 Comp Iop A	pu	Phase current unbalance 2 composite phase A operating current actual value
00043614	60P 2 Comp Iop B	pu	Phase current unbalance 2 composite phase B operating current actual value
00043616	60P 2 Comp Iop C	pu	Phase current unbalance 2 composite phase C operating current actual value
00043618	60P 3 Raw Idiff A	pu	Phase current unbalance 3 raw phase A differential current actual value
0004361A	60P 3 Raw Idiff B	pu	Phase current unbalance 3 raw phase B differential current actual value
0004361C	60P 3 Raw Idiff C	pu	Phase current unbalance 3 raw phase C differential current actual value
0004361E	60P 3 Comp Iop A	pu	Phase current unbalance 3 composite phase A operating current actual value
00043620	60P 3 Comp Iop B	pu	Phase current unbalance 3 composite phase B operating current actual value
00043622	60P 3 Comp Iop C	pu	Phase current unbalance 3 composite phase C operating current actual value
00043640	87V 1 Bus Va	Volts	Voltage differential 1 phase A bus voltage actual
00043642	87V 1 Diff Va	Volts	Voltage differential 1 phase A diff voltage actual
00043644	87V 1 Diff Vb	Volts	Voltage differential 1 phase B bus voltage actual
00043646	87V 1 Diff Vb	Volts	Voltage differential 1 phase B diff voltage actual
00043648	87V 1 Bus Vc	Volts	Voltage differential 1 phase C bus voltage actual
0004364A	87V 1 Diff Vc	Volts	Voltage differential 1 phase C diff voltage actual
0004364C	87V 2 Bus Va	Volts	Voltage differential 2 phase A bus voltage actual
0004364E	87V 2 Diff Va	Volts	Voltage differential 2 phase A diff voltage actual
00043650	87V 2 Bus Vb	Volts	Voltage differential 2 phase B bus voltage actual

Hex address	FlexAnalog name	Units	Description
00043652	87V 2 Diff Vb	Volts	Voltage differential 2 phase B diff voltage actual
00043654	87V 2 Bus Vc	Volts	Voltage differential 2 phase C bus voltage actual
00043656	87V 2 Diff Vc	Volts	Voltage differential 2 phase C diff voltage actual
00043658	87V 3 Bus Va	Volts	Voltage differential 3 phase A bus voltage actual
0004365A	87V 3 Diff Va	Volts	Voltage differential 3 phase A diff voltage actual
0004365C	87V 3 Bus Vb	Volts	Voltage differential 3 phase B buss voltage actual
0004365E	87V 3 Diff Vb	Volts	Voltage differential 3 phase B diff voltage actual
00043660	87V 3 Bus Vc	Volts	Voltage differential 3 phase C bus voltage actual
00043662	87V 3 Diff Vc	Volts	Voltage differential 3 phase C diff voltage actual
000436C4	60N 1 Raw INsp	Amps	Neutral current unbalance 1 INsp actual value
000436C6	60N 1 Comp Iop	Amps	Neutral current unbalance 1 Iop actual value
000436C8	60N 2 Raw INsp	Amps	Neutral current unbalance 2 INsp actual value
000436CA	60N 2 Comp Iop	Amps	Neutral current unbalance 2 Iop actual value
000436CC	60N 3 Raw INsp	Amps	Neutral current unbalance 3 INsp actual value
000436CE	60N 3 Comp Iop	Amps	Neutral current unbalance 3 Iop actual value
000436F0	59NU1Ntrl-p Vx Ang	Angle	Neutral voltage unbalance 1 neutral-point Vx angle
000436F2	59NU1Bus V0 Ang	Angle	Neutral voltage unbalance 1 neutral-point Vx bus V0 angle
000436F4	59NU1Bus V0 Mag	Volts	Neutral voltage unbalance 1 neutral-point Vx bus V0 magnitude
000436F6	59NU1Ntrl-p Vx Mag	Volts	Neutral voltage unbalance 1 neutral-point Vx magnitude
000436F8	59NU1Vop	Volts	Neutral voltage unbalance 1 neutral-point Vx operating voltage
000436FA	59NU1Vrest	Volts	Neutral voltage unbalance 1 neutral-point Vx restraining voltage
000436FC	59NU2Ntrl-p Vx Ang	Degrees	Neutral voltage unbalance 2 neutral-point Vx angle
000436FE	59NU2Bus V0 Ang	Degrees	Neutral voltage unbalance 2 neutral-point Vx bus V0 angle
00043700	59NU2Bus V0 Mag	pu	Neutral voltage unbalance 2 neutral-point Vx bus V0 magnitude
00043702	59NU2Ntrl-p Vx Mag	pu	Neutral voltage unbalance 2 neutral-point Vx magnitude
00043704	59NU2Vop	pu	Neutral voltage unbalance 2 neutral-point Vx operating voltage
00043706	59NU2Vrest	pu	Neutral voltage unbalance 2 neutral-point Vx restraining voltage
00043708	59NU3Ntrl-p Vx Ang	Degrees	Neutral voltage unbalance 3 neutral-point Vx angle
0004370A	59NU3Bus V0 Ang	Degrees	Neutral voltage unbalance 3 neutral-point Vx bus V0 angle
0004370C	59NU3Bus V0 Mag	pu	Neutral voltage unbalance 3 neutral-point Vx bus V0 magnitude
0004370E	59NU3Ntrl-p Vx Mag	pu	Neutral voltage unbalance 3 neutral-point Vx magnitude
00043710	59NU3Vop	pu	Neutral voltage unbalance 3 neutral-point Vx operating voltage
00043712	59NU3Vrest	pu	Neutral voltage unbalance 3 neutral-point Vx restraining voltage
00043720	SecondOfDay	---	Integer number of seconds past midnight (1000 seconds = 1 pu)
00043722	DayOfMonth	---	Day of the current month (1 day = 1 pu)
00043723	DayOfYear	---	Integer number of day of year (Julian date. 5 days = 1 pu)
00043724	Year	---	Time of day, year (100 years = 1 pu)
0004376D	PTP–IRIG-B Delta	ns	PTP time minus IRIG-B time
00043780	CAP 1 DISCHRG TIME	seconds	Capacitor control 1 discharge time in seconds
00043781	CAP 2 DISCHRG TIME	seconds	Capacitor control 2 discharge time in seconds
00043782	CAP 3 DISCHRG TIME	seconds	Capacitor control 3 discharge time in seconds
00044F60	SRC 1 Ia RMS	Amps	Source 1 phase A current RMS
00044F62	SRC 1 Ib RMS	Amps	Source 1 phase B current RMS
00044F64	SRC 1 Ic RMS	Amps	Source 1 phase C current RMS
00044F66	SRC 1 In RMS	Amps	Source 1 neutral current RMS
00044F68	SRC 1 Ia Mag	Amps	Source 1 phase A current magnitude
00044F6A	SRC 1 Ia Angle	Degrees	Source 1 phase A current angle

A

Hex address	FlexAnalog name	Units	Description
00044F6B	SRC 1 Ib Mag	Amps	Source 1 phase B current magnitude
00044F6D	SRC 1 Ib Angle	Degrees	Source 1 phase B current angle
00044F6E	SRC 1 Ic Mag	Amps	Source 1 phase C current magnitude
00044F70	SRC 1 Ic Angle	Degrees	Source 1 phase C current angle
00044F71	SRC 1 In Mag	Amps	Source 1 neutral current magnitude
00044F73	SRC 1 In Angle	Degrees	Source 1 neutral current angle
00044F74	SRC 1 Ig RMS	Amps	Source 1 ground current RMS
00044F76	SRC 1 Ig Mag	Amps	Source 1 ground current magnitude
00044F78	SRC 1 Ig Angle	Degrees	Source 1 ground current angle
00044F79	SRC 1 I_0 Mag	Amps	Source 1 zero-sequence current magnitude
00044F7B	SRC 1 I_0 Angle	Degrees	Source 1 zero-sequence current angle
00044F7C	SRC 1 I_1 Mag	Amps	Source 1 positive-sequence current magnitude
00044F7E	SRC 1 I_1 Angle	Degrees	Source 1 positive-sequence current angle
00044F7F	SRC 1 I_2 Mag	Amps	Source 1 negative-sequence current magnitude
00044F81	SRC 1 I_2 Angle	Degrees	Source 1 negative-sequence current angle
00044F82	SRC 1 Igd Mag	Amps	Source 1 differential ground current magnitude
00044F84	SRC 1 Igd Angle	Degrees	Source 1 differential ground current angle
00044FA0	SRC 2 Ia RMS	Amps	Source 2 phase A current RMS
00044FA2	SRC 2 Ib RMS	Amps	Source 2 phase B current RMS
00044FA4	SRC 2 Ic RMS	Amps	Source 2 phase C current RMS
00044FA6	SRC 2 In RMS	Amps	Source 2 neutral current RMS
00044FA8	SRC 2 Ia Mag	Amps	Source 2 phase A current magnitude
00044FAA	SRC 2 Ia Angle	Degrees	Source 2 phase A current angle
00044FAB	SRC 2 Ib Mag	Amps	Source 2 phase B current magnitude
00044FAD	SRC 2 Ib Angle	Degrees	Source 2 phase B current angle
00044FAE	SRC 2 Ic Mag	Amps	Source 2 phase C current magnitude
00044FB0	SRC 2 Ic Angle	Degrees	Source 2 phase C current angle
00044FB1	SRC 2 In Mag	Amps	Source 2 neutral current magnitude
00044FB3	SRC 2 In Angle	Degrees	Source 2 neutral current angle
00044FB4	SRC 2 Ig RMS	Amps	Source 2 ground current RMS
00044FB6	SRC 2 Ig Mag	Amps	Source 2 ground current magnitude
00044FB8	SRC 2 Ig Angle	Degrees	Source 2 ground current angle
00044FB9	SRC 2 I_0 Mag	Amps	Source 2 zero-sequence current magnitude
00044FBB	SRC 2 I_0 Angle	Degrees	Source 2 zero-sequence current angle
00044FBC	SRC 2 I_1 Mag	Amps	Source 2 positive-sequence current magnitude
00044FBE	SRC 2 I_1 Angle	Degrees	Source 2 positive-sequence current angle
00044FBF	SRC 2 I_2 Mag	Amps	Source 2 negative-sequence current magnitude
00044FC1	SRC 2 I_2 Angle	Degrees	Source 2 negative-sequence current angle
00044FC2	SRC 2 Igd Mag	Amps	Source 2 differential ground current magnitude
00044FC4	SRC 2 Igd Angle	Degrees	Source 2 differential ground current angle
00044FE0	SRC 3 Ia RMS	Amps	Source 3 phase A current RMS
00044FE2	SRC 3 Ib RMS	Amps	Source 3 phase B current RMS
00044FE4	SRC 3 Ic RMS	Amps	Source 3 phase C current RMS
00044FE6	SRC 3 In RMS	Amps	Source 3 neutral current RMS
00044FE8	SRC 3 Ia Mag	Amps	Source 3 phase A current magnitude
00044FEA	SRC 3 Ia Angle	Degrees	Source 3 phase A current angle
00044FEB	SRC 3 Ib Mag	Amps	Source 3 phase B current magnitude

Hex address	FlexAnalog name	Units	Description
00044FED	SRC 3 Ib Angle	Degrees	Source 3 phase B current angle
00044FEE	SRC 3 Ic Mag	Amps	Source 3 phase C current magnitude
00044FF0	SRC 3 Ic Angle	Degrees	Source 3 phase C current angle
00044FF1	SRC 3 In Mag	Amps	Source 3 neutral current magnitude
00044FF3	SRC 3 In Angle	Degrees	Source 3 neutral current angle
00044FF4	SRC 3 Ig RMS	Amps	Source 3 ground current RMS
00044FF6	SRC 3 Ig Mag	Amps	Source 3 ground current magnitude
00044FF8	SRC 3 Ig Angle	Degrees	Source 3 ground current angle
00044FF9	SRC 3 I_0 Mag	Amps	Source 3 zero-sequence current magnitude
00044FFB	SRC 3 I_0 Angle	Degrees	Source 3 zero-sequence current angle
00044FFC	SRC 3 I_1 Mag	Amps	Source 3 positive-sequence current magnitude
00044FFE	SRC 3 I_1 Angle	Degrees	Source 3 positive-sequence current angle
00044FFF	SRC 3 I_2 Mag	Amps	Source 3 negative-sequence current magnitude
00045001	SRC 3 I_2 Angle	Degrees	Source 3 negative-sequence current angle
00045002	SRC 3 Igd Mag	Amps	Source 3 differential ground current magnitude
00045004	SRC 3 Igd Angle	Degrees	Source 3 differential ground current angle
00045020	SRC 4 Ia RMS	Amps	Source 4 phase A current RMS
00045022	SRC 4 Ib RMS	Amps	Source 4 phase B current RMS
00045024	SRC 4 Ic RMS	Amps	Source 4 phase C current RMS
00045026	SRC 4 In RMS	Amps	Source 4 neutral current RMS
00045028	SRC 4 Ia Mag	Amps	Source 4 phase A current magnitude
0004502A	SRC 4 Ia Angle	Degrees	Source 4 phase A current angle
0004502B	SRC 4 Ib Mag	Amps	Source 4 phase B current magnitude
0004502D	SRC 4 Ib Angle	Degrees	Source 4 phase B current angle
0004502E	SRC 4 Ic Mag	Amps	Source 4 phase C current magnitude
00045030	SRC 4 Ic Angle	Degrees	Source 4 phase C current angle
00045031	SRC 4 In Mag	Amps	Source 4 neutral current magnitude
00045033	SRC 4 In Angle	Degrees	Source 4 neutral current angle
00045034	SRC 4 Ig RMS	Amps	Source 4 ground current RMS
00045036	SRC 4 Ig Mag	Amps	Source 4 ground current magnitude
00045038	SRC 4 Ig Angle	Degrees	Source 4 ground current angle
00045039	SRC 4 I_0 Mag	Amps	Source 4 zero-sequence current magnitude
0004503B	SRC 4 I_0 Angle	Degrees	Source 4 zero-sequence current angle
0004503C	SRC 4 I_1 Mag	Amps	Source 4 positive-sequence current magnitude
0004503E	SRC 4 I_1 Angle	Degrees	Source 4 positive-sequence current angle
0004503F	SRC 4 I_2 Mag	Amps	Source 4 negative-sequence current magnitude
00045041	SRC 4 I_2 Angle	Degrees	Source 4 negative-sequence current angle
00045042	SRC 4 Igd Mag	Amps	Source 4 differential ground current magnitude
00045044	SRC 4 Igd Angle	Degrees	Source 4 differential ground current angle
00045060	SRC 5 Ia RMS	Amps	Source 5 phase A current RMS
00045062	SRC 5 Ib RMS	Amps	Source 5 phase B current RMS
00045064	SRC 5 Ic RMS	Amps	Source 5 phase C current RMS
00045066	SRC 5 In RMS	Amps	Source 5 neutral current RMS
00045068	SRC 5 Ia Mag	Amps	Source 5 phase A current magnitude
0004506A	SRC 5 Ia Angle	Degrees	Source 5 phase A current angle
0004506B	SRC 5 Ib Mag	Amps	Source 5 phase B current magnitude
0004506D	SRC 5 Ib Angle	Degrees	Source 5 phase B current angle

A

Hex address	FlexAnalog name	Units	Description
0004506E	SRC 5 Ic Mag	Amps	Source 5 phase C current magnitude
00045070	SRC 5 Ic Angle	Degrees	Source 5 phase C current angle
00045071	SRC 5 In Mag	Amps	Source 5 neutral current magnitude
00045073	SRC 5 In Angle	Degrees	Source 5 neutral current angle
00045074	SRC 5 Ig RMS	Amps	Source 5 ground current RMS
00045076	SRC 5 Ig Mag	Amps	Source 5 ground current magnitude
00045078	SRC 5 Ig Angle	Degrees	Source 5 ground current angle
00045079	SRC 5 I_0 Mag	Amps	Source 5 zero-sequence current magnitude
0004507B	SRC 5 I_0 Angle	Degrees	Source 5 zero-sequence current angle
0004507C	SRC 5 I_1 Mag	Amps	Source 5 positive-sequence current magnitude
0004507E	SRC 5 I_1 Angle	Degrees	Source 5 positive-sequence current angle
0004507F	SRC 5 I_2 Mag	Amps	Source 5 negative-sequence current magnitude
00045081	SRC 5 I_2 Angle	Degrees	Source 5 negative-sequence current angle
00045082	SRC 5 Igd Mag	Amps	Source 5 differential ground current magnitude
00045084	SRC 5 Igd Angle	Degrees	Source 5 differential ground current angle
000450A0	SRC 6 Ia RMS	Amps	Source 6 phase A current RMS
000450A2	SRC 6 Ib RMS	Amps	Source 6 phase B current RMS
000450A4	SRC 6 Ic RMS	Amps	Source 6 phase C current RMS
000450A6	SRC 6 In RMS	Amps	Source 6 neutral current RMS
000450A8	SRC 6 Ia Mag	Amps	Source 6 phase A current magnitude
000450AA	SRC 6 Ia Angle	Degrees	Source 6 phase A current angle
000450AB	SRC 6 Ib Mag	Amps	Source 6 phase B current magnitude
000450AD	SRC 6 Ib Angle	Degrees	Source 6 phase B current angle
000450AE	SRC 6 Ic Mag	Amps	Source 6 phase C current magnitude
000450B0	SRC 6 Ic Angle	Degrees	Source 6 phase C current angle
000450B1	SRC 6 In Mag	Amps	Source 6 neutral current magnitude
000450B3	SRC 6 In Angle	Degrees	Source 6 neutral current angle
000450B4	SRC 6 Ig RMS	Amps	Source 6 ground current RMS
000450B6	SRC 6 Ig Mag	Amps	Source 6 ground current magnitude
000450B8	SRC 6 Ig Angle	Degrees	Source 6 ground current angle
000450B9	SRC 6 I_0 Mag	Amps	Source 6 zero-sequence current magnitude
000450BB	SRC 6 I_0 Angle	Degrees	Source 6 zero-sequence current angle
000450BC	SRC 6 I_1 Mag	Amps	Source 6 positive-sequence current magnitude
000450BE	SRC 6 I_1 Angle	Degrees	Source 6 positive-sequence current angle
000450BF	SRC 6 I_2 Mag	Amps	Source 6 negative-sequence current magnitude
000450C1	SRC 6 I_2 Angle	Degrees	Source 6 negative-sequence current angle
000450C2	SRC 6 Igd Mag	Amps	Source 6 differential ground current magnitude
000450C4	SRC 6 Igd Angle	Degrees	Source 6 differential ground current angle
00045F7F	Active Setting Group	---	Current setting group
00046390	59B 1 Vop A	Volts	Bank overvoltage 1 Vop phase A
00046391	59B 1 Vop B	Volts	Bank overvoltage 1 Vop phase B
00046392	59B 1 Vop C	Volts	Bank overvoltage 1 Vop phase C
00046393	59B 2 Vop A	Volts	Bank overvoltage 2 Vop phase A
00046394	59B 2 Vop B	Volts	Bank overvoltage 2 Vop phase B
00046395	59B 2 Vop C	Volts	Bank overvoltage 2 Vop phase C
00046396	59B 3 Vop A	Volts	Bank overvoltage 3 Vop phase A
00046397	59B 3 Vop B	Volts	Bank overvoltage 3 Vop phase B

A

Hex address	FlexAnalog name	Units	Description
00046398	59B 3 Vop C	Volts	Bank overvoltage 3 Vop phase C
00046FD1	Tracking Frequency	Hz	Terminal tracking frequency
00049900	FlexElement 1 Value	---	FlexElement 1 actual value
00049902	FlexElement 2 Value	---	FlexElement 2 actual value
00049904	FlexElement 3 Value	---	FlexElement 3 actual value
00049906	FlexElement 4 Value	---	FlexElement 4 actual value
00049908	FlexElement 5 Value	---	FlexElement 5 actual value
0004990A	FlexElement 6 Value	---	FlexElement 6 actual value
0004990C	FlexElement 7 Value	---	FlexElement 7 actual value
0004990E	FlexElement 8 Value	---	FlexElement 8 actual value
00049910	FlexElement 9 Value	---	FlexElement 9 actual value
00049912	FlexElement 10 Value	---	FlexElement 10 actual value
00049914	FlexElement 11 Value	---	FlexElement 11 actual value
00049916	FlexElement 12 Value	---	FlexElement 12 actual value
00049918	FlexElement 13 Value	---	FlexElement 13 actual value
0004991A	FlexElement 14 Value	---	FlexElement 14 actual value
0004991C	FlexElement 15 Value	---	FlexElement 15 actual value
0004991E	FlexElement 16 Value	---	FlexElement 16 actual value
0004A0B2	V0 3rd Harmonic 1	Volts	VTFF 1 V0 3rd Harmonic
0004A0B4	V0 3rd Harmonic 2	Volts	VTFF 2 V0 3rd Harmonic
0004A0B6	V0 3rd Harmonic 3	Volts	VTFF 3 V0 3rd Harmonic
0004A0B8	V0 3rd Harmonic 4	Volts	VTFF 4 V0 3rd Harmonic
0004A0BA	V0 3rd Harmonic 5	Volts	VTFF 5 V0 3rd Harmonic
0004A0BC	V0 3rd Harmonic 6	Volts	VTFF 6 V0 3rd Harmonic
0004B210	RxGOOSE Analog 1	---	RxGOOSE analog input 1
0004B212	RxGOOSE Analog 2	---	RxGOOSE analog input 2
0004B214	RxGOOSE Analog 3	---	RxGOOSE analog input 3
0004B216	RxGOOSE Analog 4	---	RxGOOSE analog input 4
0004B218	RxGOOSE Analog 5	---	RxGOOSE analog input 5
0004B21A	RxGOOSE Analog 6	---	RxGOOSE analog input 6
0004B21C	RxGOOSE Analog 7	---	RxGOOSE analog input 7
0004B21E	RxGOOSE Analog 8	---	RxGOOSE analog input 8
0004B220	RxGOOSE Analog 9	---	RxGOOSE analog input 9
0004B222	RxGOOSE Analog 10	---	RxGOOSE analog input 10
0004B224	RxGOOSE Analog 11	---	RxGOOSE analog input 11
0004B226	RxGOOSE Analog 12	---	RxGOOSE analog input 12
0004B228	RxGOOSE Analog 13	---	RxGOOSE analog input 13
0004B22A	RxGOOSE Analog 14	---	RxGOOSE analog input 14
0004B22C	RxGOOSE Analog 15	---	RxGOOSE analog input 15
0004B22E	RxGOOSE Analog 16	---	RxGOOSE analog input 16
0004B230	RxGOOSE Analog 17	---	RxGOOSE analog input 17
0004B232	RxGOOSE Analog 18	---	RxGOOSE analog input 18
0004B234	RxGOOSE Analog 19	---	RxGOOSE analog input 19
0004B236	RxGOOSE Analog 20	---	RxGOOSE analog input 20
0004B238	RxGOOSE Analog 21	---	RxGOOSE analog input 21
0004B23A	RxGOOSE Analog 22	---	RxGOOSE analog input 22
0004B23C	RxGOOSE Analog 23	---	RxGOOSE analog input 23

A

Hex address	FlexAnalog name	Units	Description
0004B23E	RxGOOSE Analog 24	---	RxGOOSE analog input 24
0004B240	RxGOOSE Analog 25	---	RxGOOSE analog input 25
0004B242	RxGOOSE Analog 26	---	RxGOOSE analog input 26
0004B244	RxGOOSE Analog 27	---	RxGOOSE analog input 27
0004B246	RxGOOSE Analog 28	---	RxGOOSE analog input 28
0004B248	RxGOOSE Analog 29	---	RxGOOSE analog input 29
0004B24A	RxGOOSE Analog 30	---	RxGOOSE analog input 30
0004B24C	RxGOOSE Analog 31	---	RxGOOSE analog input 31
0004B24E	RxGOOSE Analog 32	---	RxGOOSE analog input 32
0004D000	Brk 1 Acc Arc Amp A	kA2-cyc	Breaker 1 Acc arcing amp phase A
0004D002	Brk 1 Acc Arc Amp B	kA2-cyc	Breaker 1 Acc arcing amp phase B
0004D004	Brk 1 Acc Arc Amp C	kA2-cyc	Breaker 1 Acc arcing amp phase C
0004D006	Brk 1 Op Time A	ms	Breaker 1 operating time phase A
0004D007	Brk 1 Op Time B	ms	Breaker 1 operating time phase B
0004D008	Brk 1 Op Time C	ms	Breaker 1 operating time phase C
0004D009	Brk 1 Op Time	ms	Breaker 1 operating time
0004D00A	Brk 1 Arc Amp A	kA2-cyc	Breaker 1 arcing amp phase A
0004D00C	Brk 1 Arc Amp B	kA2-cyc	Breaker 1 arcing amp phase B
0004D00E	Brk 1 Arc Amp C	kA2-cyc	Breaker 1 arcing amp phase C
0004D010	Brk 1 Amp Max A	kA	Breaker 1 amp max phase A
0004D012	Brk 1 Amp Max B	kA	Breaker 1 amp max phase B
0004D014	Brk 1 Amp Max C	kA	Breaker 1 amp max phase C
0004D016	Brk 2 Acc Arc Amp A	kA2-cyc	Breaker 2 Acc arcing amp phase A
0004D018	Brk 2 Acc Arc Amp B	kA2-cyc	Breaker 2 Acc arcing amp phase B
0004D01A	Brk 2 Acc Arc Amp C	kA2-cyc	Breaker 2 Acc arcing amp phase C
0004D01C	Brk 2 Op Time A	ms	Breaker 2 operating time phase A
0004D01D	Brk 2 Op Time B	ms	Breaker 2 operating time phase B
0004D01E	Brk 2 Op Time C	ms	Breaker 2 operating time phase C
0004D01F	Brk 2 Op Time	ms	Breaker 2 operating time
0004D020	Brk 2 Arc Amp A	kA2-cyc	Breaker 2 arcing amp phase A
0004D022	Brk 2 Arc Amp B	kA2-cyc	Breaker 2 arcing amp phase B
0004D024	Brk 2 Arc Amp C	kA2-cyc	Breaker 2 arcing amp phase C
0004D026	Brk 2 Amp Max A	kA	Breaker 2 amp max phase A
0004D028	Brk 2 Amp Max B	kA	Breaker 2 amp max phase B
0004D02A	Brk 2 Amp Max C	kA	Breaker 2 amp max phase C

C70 Capacitor Bank Protection and Control System

Appendix B: RADIUS server configuration

This appendix outlines how to set up a RADIUS server for user authentication.

B.1 RADIUS server configuration

The following procedure is an example of how to set up a simple RADIUS server. You install the RADIUS server software on a separate computer. In this example, we use FreeRADIUS third-party software.

1. Download and install FreeRADIUS from www.freeradius.org as the RADIUS server. This is a Windows 32-bit installation that is known to work. If you try another third-party tool and it does not work, use the FreeRADIUS software from freeradius.net.
2. Open the radiusd.conf file in the <Path_to_Radius>\etc\raddb folder, locate the "bind_address" field, and enter your RADIUS server IP address. An example is

   ```
   bind_address = 10.14.61.122
   ```

   Text editor software that supports direct editing and saving of UNIX text encodings and line breaks, such as EditPad Lite, is needed for this editing.
3. In the users.conf file in the <Path_to_Radius>\etc\raddb folder, add the following text to configure a user "Tester" with an Administrator role.

   ```
   Tester                User-Password == "TesterPw1#"
                         GE-UR-Role = Administrator
   ```
4. In the clients.conf file in the <Path_to_Radius>\etc\raddb folder, add the following text to define the UR as a RADIUS client, where in this example the client IP address is 10.14.61.132, the shared secret specified here is also configured on the UR device for successful authentication, and the shortname is a short, optional alias that can be used in place of the IP address.

   ```
   client 10.14.61.132 {
   secret = Testing!123
   shortname = ur1-test
   }
   ```

   Alternatively, you may specify one secret for a network of clients, where in the example below the clients are all within the 10.14.61.0/24 subnet and the shared secret specified here is also configured on all the UR devices in the subnet for successful authentication.

   ```
   client 10.14.61.0/24 {
   secret = Testing!123
   shortname = net1-test
   }
   ```

B

5. In the <Path_to_Radius>\etc\raddb folder, create a file called dictionary.ge and add the following content.

```
# ##########################################################
#  GE VSAs
##########################################################

VENDOR                          GE              2910

# Management authorization
BEGIN-VENDOR                    GE

# Role ID
ATTRIBUTE                       GE-UR-Role      1           integer

# GE-UR-ROLE values
VALUE GE-UR-Role                Administrator   1
VALUE GE-UR-Role                Supervisor      2
VALUE GE-UR-Role                Engineer        3
VALUE GE-UR-Role                Operator        4
VALUE GE-UR-Role                Observer        5

END-VENDOR                      GE
##########################################################
```

6. In the dictionary file in the <Path_to_Radius>\etc\raddb folder, add the following line.

```
$INCLUDE dictionary.ge
```

For example, the file can look like the following:

```
$INCLUDE ../share/freeradius/dictionary
$INCLUDE dictionary.ge
```

7. For the first start, run the RADIUS server in debug mode to ensure that there are no compiling errors.

```
<Path_to_Radius>/start_radiusd_debug.bat
```

8. Set up the RADIUS parameters on the UR as follows.
   8.1. If logging in, select **Device** for the **Authentication Type**, and use Administrator for the **User Name**. The default password is "ChangeMe1#".
   8.2. Access **Settings > Product Setup > Security**. Configure the IP address (10.14.61.122 in this example) and ports (default values in this example) for the RADIUS server. Leave the GE vendor ID field at the default of 2910. Update the RADIUS shared secret (Testing!123 in this example) as specified in the clients.conf file. Restart the relay for the IP address and port changes to take effect.
9. Verify operation. Log in to the UR software as follows. In the login window, select **Server** as the **Authentication Type**, enter the user name entered (for example user name Tester and password "TesterPw1#"). Check that the RADIUS server log file shows the access with an "Access-Accept" entry.

   Recall that if you tried another third-party tool and it did not work, you can use the FreeRADIUS software from freeradius.net.

C70 Capacitor Bank Protection and Control System

Appendix C: Command line interface

This appendix outlines command line access to the software.

C.1 Command line interface

SetupCLI is a command line interface to communicate with the EnerVista UR Setup software. Commands can be sent from a DOS prompt or a Windows batch file.

The interface is installed with the EnerVista software. Its default location is similar to C:\Program Files\EnerVista\Tools\SetupCLI

The EnerVista software needs to be installed on a computer to run the command line interface. The command line interface does not provide a remote connection to a computer running the EnerVista software.

Items to note are as follows:

- Works with EnerVista UR Setup version 6.10 and later
- Available in English only
- The graphical user interface of the software is not available concurrently with the command line interface
- It does not support concurrent commands
- It has limited functionality with CyberSentry
- It does not interface with UR Engineer
- It does not work when EnerVista UR Setup security is enabled, meaning when login is required

Command syntax is as follows:

- Options enclosed in [ ] are optional
- Values enclosed in < > are replaced with your own values
- <Application> is replaced with the EnerVista software to receive the command. Use "URPC" for EnerVista UR Setup.
- <device> is the UR device name, as displayed in the **Device Name** field of the Device Setup window and listed in the Online Window. Use quotes with spaces, such as "B30 Belfort".
- "-s" can be used with any command to suppress error messages
- All commands, their return codes, and error description are logged in the file C:\ProgramData\EnerVista\Tools\SetupCLI\SetupCLI.log
- When the Supervisor account is enabled, the 'Lock Relay' setting must first be changed to No before the putsettings, inservice, or reboot command can be used. This setting cannot be changed using the command line interface.
- Use quotes ("") to enclose any parameter containing a space

- Commands, options, and parameters are case sensitive
- All commands have a return code of 0-255. 0 indicates success and 1-255 indicate different errors
- If SetupCLI is automated (in a batch file), make sure that only a single batch is running at a time. SetupCLI does not support concurrent operations.

To run the command line interface:

1. In Windows, click the **Start** button, enter **cmd**, and press the **Enter** key. After prompting for permission, the Windows command window opens.
2. Enter `SetupCLI` followed by the action to execute. An example of use is to enter "SetupCLI -h" to display help, specifically the commands and explanations outlined here.

C

Figure C-1: Command line interface run in the command window

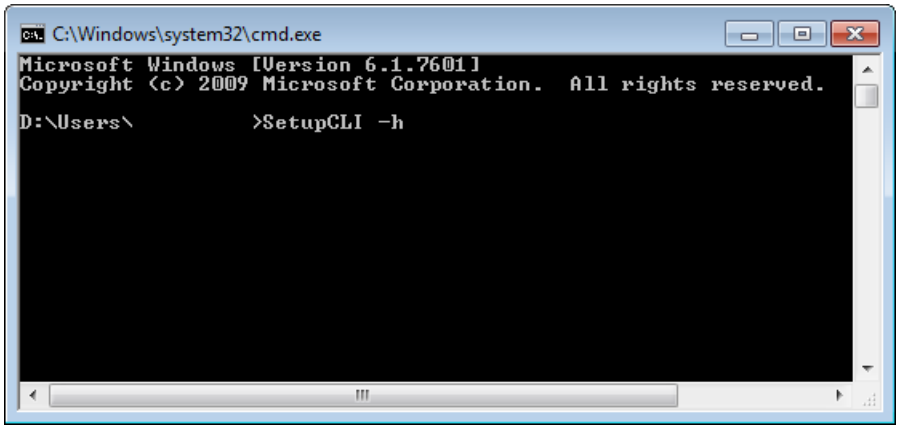

SetupCLI -h

Display help.

It displays the content outline here.

SetupCLI <Application> start [-c] [-s]

Launch application with name <Application>.

To start in client mode, which is the graphical user interface, include option '-c'. Before use, the software must be idle without any windows open. Any activity or open windows can cause unexpected behavior. When in client mode, do not use Launchpad's Site Management feature.

To suppress errors, include option -s.

Example: SetupCLI URPC start -c

SetupCLI <Application> exit [-s]

Exit application with name <Application>.

Example: SetupCLI URPC exit

SetupCLI <Application> login -d <device> [-A <authentication type>] [-a <account>] -w <password> [-s]

Authenticate with device <device> using password <password>.

For non-CyberSentry devices — Set <authentication type> to "traditional". Note that <authentication type> defaults to "traditional" if not specified. Set <account> to "COMMANDS" or "SETTINGS". If not specified, the SETTINGS account is used.

Example: SetupCLI URPC login -d "C30 Melbourne" -A traditional -a SETTINGS -w 1password1

Example of a batch file that checks for an error (this batch file uses standard batch file operations to check the return code (ERRORLEVEL) and jump to an error handler):

```
SetupCLI URPC start
SetupCLI URPC login -d demoDevice -a SETTINGS -w WrongPassword -A traditional
IF NOT ERRORLEVEL 0 GOTO FAILED
SetupCLI URPC putsettings -d demoDevice  -f "example file.urs"
SetupCLI URPC inservice -d demoDevice
SetupCLI URPC reboot -d demoDevice
SetupCLI URPC exit
exit

:FAILED
echo Please try again
exit
```

For CyberSentry devices with local authentication — Set <authentication type> to "local". Set <account> to "Supervisor", "Administrator", "Engineer", "Operator", or "Observer".

For CyberSentry devices with RADIUS authentication — Set <authentication type> to "radius". Set <account> to the user's account on the RADIUS server.

SetupCLI <Application> logout -d <device> [-s]

Log out of device <device>.

Example: SetupCLI URPC logout -d C30

SetupCLI <Application> getsettings -d <device> -f <File> [-s]

Read settings from device <device> and save them to the .urs file <File>. The <File> must not already exist. The default path to the output file is C:\Users\Public\Public Documents\GE Power Management\URPC\Data

Example: SetupCLI URPC getsettings -d C30 -f "C30 Markham.urs"

Example of a batch file to retrieve a settings file:

```
SetupCLI URPC start
SetupCLI URPC getsettings -d demoDevice -f C:\example.urs
SetupCLI URPC exit
```

Example of a batch file to retrieve a settings file from a relay that requires RADIUS authentication:

```
SetupCLI URPC start
SetupCLI URPC login -d demoDevice -a %1 -w %2 -A radius
SetupCLI URPC getsettings -d demoDevice -f "example file.urs"
SetupCLI URPC logout -d demoDevice
SetupCLI URPC exit
```

Although a user name and password could have been entered in this batch file, it would have created a security risk. Batch files allow you to pass in runtime parameters and refer to them in your script as %1, %2, and so on. For example, if this file is called example.bat, one calls it as follows: "example.bat MyUserName MyPassword"

SetupCLI <Application> putsettings -d <device> -f <File> [-s]

Write the settings file <File> to the device <device>.

For CyberSentry devices, putsettings is only supported for users with the "Administrator" role.

Example: SetupCLI URPC putsettings -d C30 -f "C30 Markham.urs"

C

SetupCLI <Application> compare -f <File1> -r <File2> -o <OutputFile> [-s]

Compare settings files <File1> and <File2>, and save output to <OutputFile>.

Example: SetupCLI URPC compare -f may.urs -r september.urs -o compared.txt

Batch file example that retrieves a settings file, compares it with an existing settings file, and opens the resulting comparison file:

```
SetupCLI URPC start
SetupCLI URPC getsettings -d demoDevice  -f devicefile.urs
SetupCLI URPC compare -f existingfile.urs -r devicefile.urs -o output.txt
```

The output is similar to the following:

```
Comparing settings file aaa.urs : C:\Users\Public\Public Documents\GE Power Management\URPC\Data\ with bbb.urs
: C:\Users\Public\Public Documents\GE Power Management\URPC\Data\

 #    Setting Name                (Group,Module,Item)   Value

 1 + Default Message Timeout          (1,1,1) = 299 s
 2 - Default Message Timeout          (1,1,1) = 300 s
 3 + Flash Message Time               (1,1,1) = 0.9 s
 4 - Flash Message Time               (1,1,1) = 1.0 s
```

SetupCLI <Application> inservice -d <device> [-n] [-s]

Put the device in service. Include option -n to take the device out of service.

Example: SetupCLI URPC inservice -d C30

SetupCLI <Application> reboot -d <device> [-s]

Reboot the relay <device>. This is necessary after changing IEC 61850 settings and aggregator source settings.

Example: SetupCLI URPC reboot -d "C30_Instanbul"

SetupCLI <Application> adddevice -I <IP Address> -S <Slave Address> -P <Modbus Port>

Connect to a device using its IP address, slave address, and Modbus port. Show the device in the EnerVista interface under the SetupCLI Site as DEV@SETUP_CLI.

EnerVista UR Setup 7.30 or higher supports this command.

Figure C-2: Device added using IP address

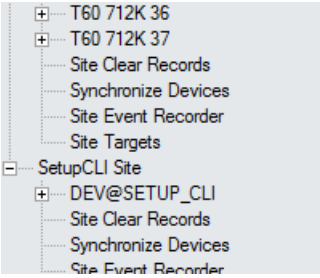

The device is named as DEV@SETUP_CLI, which is used as the device name required by the <device> parameter of other SetupCLI commands.

The device name DEV@SETUP_CLI is always assigned to the device that is connected most recently by performing 'adddevice' command. It means that the Application only keeps up to one device named as DEV@SETUP_CLI, the 'adddevice' command disconnects/deletes the device DEV@SETUP _CLI that was connected previously by performing 'adddevice' command.

The device name DEV@SETUP_CLI is never used to configure/connect to a device through the graphical user interface.

Example of a batch file using a device IP address to retrieve its settings file:

```
SetupCLI URPC start
SetupCLI URPC adddevice -I 192.168.140.113 -S 113 -P 502
SetupCLI URPC getsettings -d DEV@SETUP_CLI -f C:\example.urs
SetupCLI URPC exit
```

After connecting the device using IP address, the device name DEV@SETUP_CLI is used to identify this device in 'getsettings' command.

Example of a batch file using a device IP address to retrieve a settings file when RADIUS authentication is required:

```
SetupCLI URPC start
SetupCLI URPC adddevice -I 192.168.140.113 -S 113 -P 502
SetupCLI URPC login -d DEV@SETUP_CLI -a %1 -w %2 -A radius
SetupCLI URPC getsettings -d DEV@SETUP_CLI -f "example file.urs"
SetupCLI URPC logout -d DEV@SETUP_CLI
SetupCLI URPC exit
```

DEV@SETUP_CLI has to be used as the device name in the commands followed by the 'adddevice' command.

C

C70 Capacitor Bank Protection and Control System

Appendix D: Miscellaneous

This chapter provides the warranty, revision history, and open source information.

D.1 Warranty

For products shipped as of 1 October 2013, GE Grid Solutions warrants most of its GE manufactured products for 10 years. For warranty details including any limitations and disclaimers, see the Terms and Conditions at

http://www.gegridsolutions.com/multilin/warranty.htm

For products shipped before 1 October 2013, the standard 24-month warranty applies.

D.2 Revision history

The tables outline the releases and revision history of this document.

Table D-1: Revision history (English)

Manual P/N	C70 revision	Release date	ECO
1601-9015-P1	5.2x	23 October 2006	URX-230
1601-9015-P2	5.2x	24 January 2007	URX-232
1601-9015-R1	5.4x	26 June 2007	URX-242
1601-9015-R2	5.4x	31 August 2007	URX-246
1601-9015-R3	5.4x	17 October 2007	URX-251
1601-9015-S1	5.5x	7 December 2007	URX-253
1601-9015-S2	5.5x	22 February 2008	URX-258
1601-9015-S3	5.5x	12 March 2008	URX-260
1601-9015-T1	5.6x	27 June 2008	08-0390
1601-9015-U1	5.7x	29 May 2009	09-0938
1601-9015-U2	5.7x	30 September 2009	09-1165
1601-9015-V1	5.8x	29 May 2010	09-1457
1601-9015-V2	5.8x	04 January 2011	11-2237
1601-9015-W1	5.9x	12 January 2011	11-2227
1601-9015-X1	6.0x	21 December 2011	11-2840

Manual P/N	C70 revision	Release date	ECO
1601-9015-X2	6.0x	5 April 2012	12-3254
1601-9015-Y1	7.0x	30 September 2012	12-3529
1601-9015-Y2	7.0x	11 November 2012	12-3601
1601-9015-Z1	7.1x	30 March 2013	13-0126
1601-9015-AA1	7.2x	1 August 2013	13-0401
1601-9015-AB1	7.3x	7 November 2014	14-1408
1601-9015-AB2	7.3x	1 September 2015	15-2215
1601-9015-AC1	7.40x	8 December 2016	16-3319
1601-9015-AE1	7.41x	31 January 2017	17-3427
1601-9015-AE3	7.4x	28 April 2017	17-3561
1601-9015-AF1	7.6x	30 June 2017	17-3779
1601-9015-AF2	7.6x	31 October 2017	17-3935
1601-9015-AG1	7.7x	31 March 2018	18-4430
1601-9015-AG2	7.7x	4 May 2018	18-4517
1601-9015-AH1	7.8x	17 December 2018	18-4703
1601-9015-AI1	7.9x	14 November 2019	19-5181
1601-9015-AI2	7.9x	12 February 2020	20-5579
1601-9015-AI3	7.9x	9 October 2020	20-6008

D

Table D-2: Major changes for C70 manual version AI3 (English)

Page	Description
---	General revision
2-	Deleted end-of-manufacturing modules 2G from order code tables

Table D-3: Major changes for C70 manual version AI2 (English)

Page	Description
---	Updated user-programmable pushbutton information because 48 applies to B30 with IY software option and graphical front panel and 16 applies to other products

Table D-4: Major changes for C70 manual version AI1 (English)

Page	Description
---	General revision. For all products, increased number of Digital Elements to 96, FlexElements to 16, FlexLogic timers to 64, and Virtual Inputs and Outputs to 128.
---	Added redundant power supply to Order Codes and Control Power sections
---	Increased number of user-programmable pushbuttons to 48 for graphical front panel in specifications, FlexLogic operand table, and settings
2-	Updated Dropout Level specification for several elements, changing percent range to a number
2-10	Added order codes for Inter-relay communication modules in U column for horizontal unit
5-78	Added Set up Subscriptions section for RxGOOSE
5-93	Updated location of BKR1 ST.LOC OPERAND, BKR1 SYNCCHECK CLS, BKR1 INTERLOCK OPN, BKR1 INTERLOCK CLS settings, moving from IEC 61850 Breaker panel to System Setup Breaker panel. Renamed them.
5-156	Updated location of XSWI ST.LOC OPERAND, XSWI INTERLOCK OPN, and XSWI INTERLOCK CLS settings, moving from IEC 61850 Switches panel to System Setup Switches panel
5-174	Updated SV Sync Stream setting and its options to SV Sync Reference under Settings > Process Bus Module > General
5-336	Updated Testing section
6-13	Added Actual Values > Status > IED section
A-	Updated FlexAnalog table, including address format

Page	Description
D-3	Added Open Source Licenses section

Table D-5: Major changes for C70 manual version AH1 (English)

Page	Description
---	General revision
2-10	Added order codes 85, 86, 87 for Process Bus Modules that support IEC 61850-9-2LE and IEC 61869. Added to the two process bus order code tables for all products except B90, C30, L60, and to the Replacement Modules tables.
3-	Updated CPU module on Typical Wiring diagram, CPU Module Communications Wiring diagram, and Options for IRIG-B Connection diagram
5-180	Added Process Bus Module operands to the FlexLogic operands table and Process Bus PTP Failure, Clock Mismatch, and PB Clock Unsynchronized operands under Self-Diagnostics of same
5-258	Updated Settings > Control Elements > Setting Groups section, including addition of Control Mode setting
5-318	Added Process Bus Module settings section for the non-HardFiber Process Bus Modules
6-28	Added Process Bus Module actual values section for the non-HardFiber Process Bus Modules
7-2	Added Clear SV Diagnostics command to the Commands > Clear Records table
B-	Updated RADIUS chapter

Table D-6: Major changes for C70 manual version AG2 (English)

Page	Description
---	General revision. Improved figure quality by using conditional text to switch between PDF and PNG figures.

Table D-7: Major changes for C70 manual version AG1 (English)

Page	Description
---	General revision
3-53	Added IP and subnet mask address rules to the Set IP Address in UR section
5-56	Added IEC 61850 Editions 1 and 2 section
5-111	Added support for a redundant SNTP server as a time source
5-172	Added GOOSE simulation operands to FlexLogic operands table
5-313	Added Settings > Simulation > GOOSE section
6-4	Added Actual Values > Graphical Panel > LEDs and Pushbuttons information
6-12	Added Actual Values > Status > Protocol section

D.3 Open source licenses

The optional non-HardFiber Process Bus Modules include open source code. See the UR-OpenSourceLicense folder installed at the root level with the software, such as at C:\Program Files (x86)\GE Power Management\URPC\

D

C70 Capacitor Bank Protection and Control System

Abbreviations

A	Ampere
AC	Alternating Current
A/D	Analog to Digital
AE	Accidental Energization, Application Entity
AMP	Ampere
ANG	Angle
ANSI	American National Standards Institute
APDU	Application Protocol Data Unit
AR	Automatic Reclosure
ARP	Address Resolution Protocol
ASDU	Application-layer Service Data Unit
ASYM	Asymmetry
AUTO	Automatic
AUX	Auxiliary
AVG	Average
AWG	American Wire Gauge
BCS	Best Clock Selector
BER	Bit Error Rate
BF	Breaker Fail
BFI	Breaker Failure Initiate
BKR	Breaker
BLK	Block
BLKG	Blocking
BNC	Bayonet Neill-Concelman
BPNT	Breakpoint of a characteristic
BRKR	Breaker
CA	Certificate Authority
CAP	Capacitor
CC	Coupling Capacitor
CCVT	Coupling Capacitor Voltage Transformer
CFG	Configure / Configurable
.CFG	Filename extension for oscillography files
CHK	Check
CHNL	Channel
CID	Configured IED Description
CLS	Close
CLSD	Closed
CMND	Command
CMPRSN	Comparison
CO	Contact Output
COM	Communication
COMM	Communications
COMP	Compensated, Comparison
ConfRev	Configuration Revision
CONN	Connection
CONT	Continuous, Contact
CO-ORD	Coordination
CPU	Central Processing Unit
CRC	Cyclic Redundancy Code/Check
CRL	Certificate Revocation List
CRT, CRNT	Current
CSA	Canadian Standards Association
CT	Current Transformer
CVT	Capacitive Voltage Transformer
D/A	Digital to Analog
DA	Data Attribute
DANH	Doubly Attached Node with HSR
DANP	Doubly Attached Node with DANP
DC (dc)	Direct Current
DCE	Data Communications Equipment
DCS	Distributed Control System
DD	Disturbance Detector
DFLT	Default
DGNST	Diagnostics
DIFF	Differential
DIR	Directional
DISCREP	Discrepancy
DIST	Distance
DMD	Demand
DNP	Distributed Network Protocol
DPO	Dropout
DPS	Double-Point Status
DSP	Digital Signal Processor
DST	Daylight Savings Time
dt	Rate of Change
DTT	Direct Transfer Trip
DUTT	Direct Under-reaching Transfer Trip
EGD	Ethernet Global Data
ENCRMNT	Encroachment
EPRI	Electric Power Research Institute
.EVT	Filename extension for event recorder files
EXT	Extension, External
F	Field
FAIL	Failure
FD	Fault Detector
FDH	Fault Detector high-set
FDL	Fault Detector low-set
FIR	Finite Impulse Response
FLA	Full Load Current
FO	Fiber Optic

FPGA	Field-programmable Gate Array
FREQ	Frequency
FSK	Frequency-Shift Keying
FTP	File Transfer Protocol
FxE	FlexElement™
FWD	Forward
G	Generator
GCM	Galois Counter Mode
GDOI	Group Domain of Interpretation
GE	General Electric
GFP	Graphical Front Panel
GIS	Gas Insulated Switchgear
GND	Ground
GNTR	Generator
GoCB	GOOSE Control Block
GOOSE	General Object Oriented Substation Event
GPS	Global Positioning System
GSU	Generator Step-Up
HARM	Harmonic / Harmonics
HCT	High Current Time
HGF	High-Impedance Ground Fault (CT)
HIZ	High-Impedance and Arcing Ground
HMI	Human-Machine Interface
HSR	High-availability Seamless Redundancy
HTTP	Hyper Text Transfer Protocol
HV	High Voltage
HYB	Hybrid
Hz	Hertz
I	Instantaneous
I_0	Zero Sequence current
I_1	Positive Sequence current
I_2	Negative Sequence current
IA	Phase A current
IAB	Phase A minus B current
IB	Phase B current
IBC	Phase B minus C current
IC	Phase C current
ICA	Phase C minus A current
ICD	IED Capability Description
ID	Identification
IED	Intelligent Electronic Device
IEC	International Electrotechnical Commission
IEEE	Institute of Electrical and Electronic Engineers
IG	Ground (not residual) current
Igd	Differential Ground current
IGMP	Internet Group Management Protocol
IID	Instantiated IED Capability Description
IN	CT Residual Current (3Io) or Input
INC SEQ	Incomplete Sequence
INIT	Initiate
INST	Instantaneous
INV	Inverse
I/O	Input/Output
IOC	Instantaneous Overcurrent
IOV	Instantaneous Overvoltage
IRC	Inter-Relay Communication
IRIG	Inter-Range Instrumentation Group
ISO	International Standards Organization
IUV	Instantaneous Undervoltage
K0	Zero Sequence Current Compensation
kA	kiloAmpere
KDC	Key Distribution Center
kV	kiloVolt
LCD	Liquid Crystal Display
LED	Light Emitting Diode
LEO	Line End Open
LFT BLD	Left Blinder
LOOP	Loopback
LPU	Line Pickup
LRA	Locked-Rotor Current
LTC	Load Tap-Changer
LV	Low Voltage
M	Machine
M2M	Machine to Machine
mA	MilliAmpere
MAG	Magnitude
MAN	Manual / Manually
MAX	Maximum
Mb	Megabit
MIC	Model Implementation Conformance
MIN	Minimum, Minutes
MMI	Man Machine Interface
MMS	Manufacturing Message Specification
MRT	Minimum Response Time
MSG	Message
MTA	Maximum Torque Angle
MTR	Motor
MU	Merging Unit
MVA	MegaVolt-Ampere (total 3-phase)
MVA_A	MegaVolt-Ampere (phase A)
MVA_B	MegaVolt-Ampere (phase B)
MVA_C	MegaVolt-Ampere (phase C)
MVAR	MegaVar (total 3-phase)
MVAR_A	MegaVar (phase A)
MVAR_B	MegaVar (phase B)
MVAR_C	MegaVar (phase C)
MVARH	MegaVar-Hour
MW	MegaWatt (total 3-phase)
MW_A	MegaWatt (phase A)
MW_B	MegaWatt (phase B)
MW_C	MegaWatt (phase C)
MWH	MegaWatt-Hour
N	Neutral
N/A, n/a	Not Applicable
NEG	Negative
NMPLT	Nameplate
NOM	Nominal
NTR	Neutral
O	Over
OC, O/C	Overcurrent
OCSP	Online Certificate Status Protocol
OF	Overload Factor
O/P, Op	Output
OP	Operate
OPER	Operate
OPERATG	Operating
O/S	Operating System
OSI	Open Systems Interconnect
OSB	Out-of-Step Blocking
OUT	Output
OV	Overvoltage
OVERFREQ	Overfrequency
OVLD	Overload
P	Phase
PB	Process Bus
PBM	Process Bus Module
PC	Phase Comparison, Personal Computer
PCNT	Percent
PF	Power Factor (total 3-phase)
PF_A	Power Factor (phase A)
PF_B	Power Factor (phase B)
PF_C	Power Factor (phase C)
PFLL	Phase and Frequency Lock Loop
PHS	Phase
PICS	Protocol Implementation & Conformance

	Statement
PKI	Public Key Infrastructure
PKP	Pickup
PLC	Power Line Carrier
POS	Positive
POTT	Permissive Over-reaching Transfer Trip
PP	Power Profile
PPP	Point-to-Point
PPS	Pulse per Second
PRESS	Pressure
PRI	Primary
PROT	Protection
PRP	Parallel Redundancy Protocol
PSEL	Presentation Selector
PTP	Precision Time Protocol
pu	Per Unit
PUIB	Pickup Current Block
PUIT	Pickup Current Trip
PUSHBTN	Pushbutton
PUTT	Permissive Under-reaching Transfer Trip
PWM	Pulse Width Modulated
PWR	Power
QUAD	Quadrilateral
R	Rate, Reverse
RA	Registration Authority
RCA	Reach Characteristic Angle
RedBox	Redundancy Box
REF	Reference
REM	Remote
REV	Reverse
R-GOOSE	Routable GOOSE
RI	Reclose Initiate
RIP	Reclose In Progress
RGT BLD	Right Blinder
RMA	Return Materials Authorization
RMS	Root Mean Square
ROCOF	Rate of Change of Frequency
ROD	Remote Open Detector
RRTD	Remote Resistance Temperature Detector
RST	Reset
RSTR	Restrained
RTD	Resistance Temperature Detector
RTU	Remote Terminal Unit
RX (Rx)	Receive, Receiver
s	second
S	Sensitive
SAN	Singly Attached Node
SAT	CT Saturation
SBO	Select Before Operate
SCADA	Supervisory Control and Data Acquisition
SCC	Serial Communication Controller
SCD	System Configuration Description
SCL	Substation Configuration Language
SCEP	Simple Certificate Enrollment Protocol
SEC	Secondary
SEL	Select / Selector / Selection
SENS	Sensitive
SEQ	Sequence
SFTP	Secure Shell (SSH) File Transfer Protocol, Secure File Transfer Protocol
SIR	Source Impedance Ratio
SmpSynch	Samples Synchronized
SNTP	Simple Network Time Protocol
SRC	Source
SSB	Single Side Band
SSEL	Session Selector
STATS	Statistics
SUPN	Supervision
SUPV	Supervise / Supervision
SV	Supervision, Service, Sampled Value
SYNC	Synchrocheck
SYNCHCHK	Synchrocheck
T	Time, transformer
TC	Thermal Capacity
TCP	Transmission Control Protocol
TCU	Thermal Capacity Used
TD MULT	Time Dial Multiplier
TEMP	Temperature
TFTP	Trivial File Transfer Protocol
THD	Total Harmonic Distortion
TMR	Timer
TOC	Time Overcurrent
TOV	Time Overvoltage
TRANS	Transient
TRANSF	Transfer
TSEL	Transport Selector
TUC	Time Undercurrent
TUV	Time Undervoltage
TX (Tx)	Transmit, Transmitter
U	Under
UC	Undercurrent
UCA	Utility Communications Architecture
UDP	User Datagram Protocol
UL	Underwriters Laboratories
UNBAL	Unbalance
UR	Universal Relay
URC	Universal Recloser Control
.URS	Filename extension for settings files
UV	Undervoltage
V/Hz	Volts per hertz
V_0	Zero Sequence voltage
V_1	Positive Sequence voltage
V_2	Negative Sequence voltage
VA	Phase A voltage
VAB	Phase A to B voltage
VAG	Phase A to Ground voltage
VARH	Var-hour voltage
VB	Phase B voltage
VBA	Phase B to A voltage
VBG	Phase B to Ground voltage
VC	Phase C voltage
VCA	Phase C to A voltage
VCG	Phase C to Ground voltage
VF	Variable Frequency
VIBR	Vibration
VT	Voltage Transformer
VTFF	Voltage Transformer Fuse Failure
VTLOS	Voltage Transformer Loss Of Signal
WDG	Winding
WH	Watt-hour
w/ opt	With Option
WGS	World Geodetic System
WRT	With Respect To
X	Reactance
XDUCER	Transducer
XFMR	Transformer
Z	Impedance, Zone

C70 Capacitor Bank Protection and Control System

Index

Symbols

.....5-71

Numerics

10BASE-F settings 5-45
4L Discrepancy message 7-12
7R module 3-41
7S module 3-40

A

AC Bank assigned is not configured 5-193
AC current inputs
  explained 3-17
  settings 5-147
  specifications 2-26
AC voltage input specifications 2-26
Accents 4-56
Access Violation message 3-64
Acknowledge alarm 6-4
Activate relay 3-49
Active setting group 5-220
Actual values 6-1
  alarms for graphical front panel 6-3
  display on graphical front panel 4-35, 4-36
  monitor with Modbus Analyzer 10-1
  not activated graphical front panel 4-53
Add Device from File option
  restore settings to online device 10-11
  save to Offline Window 3-68
Add Device to Offline Window preferences 10-9
Add module, check settings not defaulted 10-24
Add relay 3-53
Administrator
  add user account 5-14
  command to force logoff 7-9
  no automatic logout from front panel 5-21
  role for CyberSentry 2-5
Alarm LEDs 5-125
Alarms
  acknowledge 4-34, 6-3, 6-4
  add 4-35, 5-36
  messages 7-10
  overview 4-32
  reset 4-34, 6-4
AND gate explained 4-83
Annunciator editor 4-35
ANSI device numbers 2-2
Apparent power
  actual values 6-19
  specifications 2-25
Application examples
  breaker trip circuit integrity 5-307
  contact inputs 5-326
  direct inputs and outputs 5-333
  latching outputs 5-330
Apply settings to other device 10-7
Approvals 2-36
Architecture, relay 5-194
Arcing current 5-310
Audit list of port numbers 5-45
Authentication by device or server 5-16
Automatic discovery of UR devices 3-63
Automatic voltage regulator
  FlexLogic operands 5-197
  logic diagram 5-304
  settings 5-300
  specifications 2-18

Auxiliary overvoltage
FlexLogic operands 5-197
logic 5-272
settings 5-271
specifications 2-22
Auxiliary voltage channel 3-17
Auxiliary voltage metering 6-19
AWG wire size
CT/VT 3-17
F485 converter 3-51
G.703 interface 3-40
module 7S 3-40
modules 6X, 6W 3-21
modules 7T, 7W 3-44

B

Back up settings 5-60, 10-8
Bad IRIG-B Signal message 7-13
Bad PTP Signal message 7-13
Bank overvoltage
FlexAnalogs A-32
Bank phase overvoltage
FlexLogic operands 5-198
logic diagram 5-279
settings 5-275
specifications 2-21
theory of operation 9-1
Banks 5-7, 5-147
Basic front panel
dimensions 3-2
FlexLogic 5-197
interface 4-16
IP rating 2-34
keypad 4-38
labels 4-48
LEDs 4-40, 5-125
navigation 4-50
order code over two lines 4-38
order codes 2-7
pushbuttons 5-129
specifications 2-23
use, change setting 4-52
Battery
disposal 10-26
monitor with annunciator alarm 4-35
monitor with Engineer 4-75
monitor with FlexLogic 5-208
monitor with metering window 4-36
monitor with self-test alarm 5-126
replace 10-25
Baud rate 5-42
Blinking alarm 4-34
Block setting 5-5
Breaker arcing current
actual values 6-31
FlexAnalogs A-34
FlexLogic operands 5-198
logic diagram 5-312
measurement 5-311
settings 5-310
specifications 2-22
Breaker control
control of two breakers 4-59
dual breaker logic 5-157
FlexLogic operands 5-199
settings 5-154
with IEC 61850 5-94
Breaker failure
description 5-258
FlexLogic operands 5-198
logic diagram 5-262, 5-263
settings 5-257
specifications 2-22
Breaker flashover
FlexLogic operands 5-198
logic diagram 5-317
settings 5-313
specifications 2-22
Breaker restrike
FlexLogic operands 5-198
logic diagram 5-320
settings 5-318
specifications 2-22
Breaker-and-a-half scheme 5-6
Brick
interface module described 3-18
remote resources actual values 6-24
remote resources settings 5-146
self-test errors 7-16
Trouble message 7-18
Brightness 5-26

C

C37.94 communications 3-47
Cannot log in 2-5
Capacitor control
actual values 6-22
FlexAnalogs A-29
FlexLogic operands 5-199
logic diagram 5-298
settings 5-294
specifications 2-18
Caution symbol in Offline Window 4-69
CE certification 2-36
Certification 2-36
Changes D-1
Channel
banks 5-147
tests 6-11

Check Settings message 7-12
Chinese limited to 10 character input 5-27
CID file, SCD file 5-79
CID files
  create 5-60
  explained 3-68
  import 3-68, 10-12
  import preferences 10-9
  view 5-60
Circuit monitoring applications 5-305
Cleaning 2-36
Clear
  files and records 10-29
  LEDs 5-332
  relay records using IEC 61850 5-98
  relay records using settings 5-41
  security logs 7-9
Clock
  actual values 6-9
  FlexAnalogs A-29
  graphical front panel format 5-30
  IRIG-B 3-37
  PTP 5-113
  set 7-3
  settings 5-112, 5-178, 6-27
  settings with Process Bus Module 5-175, 5-177, 6-27
  synchronize several devices 5-113
  time of day specifications 2-24
Close
  HTTP port 5-103
  IEC 60870-5-104 port 5-105
  Modbus port 5-51
  TFTP port 5-104
  Web access port 5-103
COMM Path Incomplete message 7-12, 7-14
Comm status remaining connections 6-11
Command line interface to software C-1
Command password 4-60, 5-10
Commands
  control user accounts 5-14
  menu 7-1
  with IEC 61850 5-98
Communications
  10BASE-F 5-45
  connecting to the UR 3-61, 3-64
  DNP 5-53
  HTTP 5-103
  IEC 60870-5-10 5-106
  IEC 60870-5-104 5-104
  inter-relay specifications 2-32
  Modbus registers 5-111
  Modbus settings 5-51
  modem 3-62
  Protocol selection 5-51
  RS232 ..... 3-33, 5-42
  RS485 ..... 3-35, 5-42
  settings 5-45, 5-53
  specifications 2-30, 2-32
  timeout 5-52
  web server 5-103
Compare settings 10-7
Compliance 2-36
COMTRADE files, view 4-80
Conducted RFI specifications 2-35
Connect, unable to 3-64, 5-45
Connection timeout 5-52
Connectors, LC and ST 3-13
Contact inputs
  actual values 6-5
  FlexLogic operands 5-205
  settings 5-325
  specifications 2-27
  thresholds 5-325
  wet and dry connections 3-26
Contact outputs
  actual values 6-6
  explained 5-328
  FlexLogic operands 5-205
  settings 5-328
Control elements 5-283
Control power
  description 3-15
  specifications 2-30
Control pushbuttons
  FlexLogic operands 5-197
  logic diagram 5-129
  settings 5-127
  specifications 2-24
Convert device settings 10-5
Copy of Copy of 10-7
Copy settings for upgrading 10-5
Copy settings to other device 10-7
Counters
  actual values 6-8
  settings 5-307
CPU module diagram 3-12
CPU, new types T, U, V 10-15
CRC alarm 5-143
Critical failure relay specifications 2-29
CSA certification 2-36

CT bank settings 5-147
CT inputs 3-16, 5-7, 5-147
CT wiring 3-17
Current bank 5-147
Current harmonics specifications 2-25
Current metering actual values 6-17
Curves
  definite time 5-226, 5-267
  FlexCurves 5-165, 5-226
  IAC 5-224
  IEC 5-223
  IEEE 5-222
  inverse time undervoltage 5-267
  types 5-221
Cutout, panel 3-2
CyberSentry
  FlexLogic operands 5-197
  installation 3-67, 5-24
  RS485 port limitation 5-17
  security commands 7-9
  security overview 2-4
  software options 2-33
  specifications 2-33
  system logs 5-25

D

D400 connection 3-69
Dark graphical front panel 5-31
Data logger
  actual values 6-31
  clearing 5-41, 7-2
  settings 5-120
  specifications 2-25
Data set
  defined 5-69
Data, reading values 6-1
Dataset member is empty message 5-70
Date
  firmware 6-32
  last cleared fault report date 6-28
  last cleared oscillography date 6-30
  last fault report date 6-28
  last settings change 6-32
  manufacturing date 6-32
  set 5-29, 5-112, 5-178, 6-27, 7-3
DCmA inputs 6-24
  actual values 6-24
  FlexAnalogs A-26
  settings 5-338
  specifications 2-27
DCmA outputs
  description 3-31
  settings 5-340
  specifications 2-30
Decommission 10-29
Default password 5-14
Default settings 10-7, 10-8
Default settings to factory default 7-3
Definite time curve 5-226, 5-267
Delete files and records 5-41, 10-29
Deploy settings 10-7
Device authentication 5-16
Device Connectivity Report in Engineer 4-76
Device information files 1-2, 4-76
Device overview 10-1
Device setup 3-63
Diagnostic Alarm COP message 7-12
Diagnostic Alarm DSP message 7-12
Diagnostic Failure message 7-11
Diagnostics Failure message 7-12
Dielectric strength 3-15
Digital counters
  actual values 6-8
  FlexLogic operands 5-199
  logic diagram 5-309
  settings 5-307
Digital elements
  application example 5-306
  FlexLogic operands 5-200
  logic diagram 5-305
  settings 5-304
Digital outputs
  see Contact outputs
Dimensions 3-2
Direct Device Off message 7-12
Direct devices
  settings 5-333
  status 6-10
Direct I/O
  application example 5-333
  configuration examples 5-139
  settings 5-333
Direct inputs
  actual values 6-10
  application example 5-333
  clearing counters 7-2
  FlexLogic operands 5-205
  settings 5-333
  specifications 2-27
Direct outputs
  application example 5-333
  clearing counters 7-2
  settings 5-333
  specifications 2-30
Direct Ring Break message 7-13
Directional overcurrent
  see Phase, Ground, and Neutral directional
Directional polarization 5-230
Disconnect switch
  FlexLogic operands 5-204
  logic 5-163
  settings 5-159
Discover button 3-63

Disk space required 3-51
Display settings 5-26
Disposal 10-31
Dispose of battery 10-26
Disturbance detector
  FlexLogic operands 5-203
DNP
  connections remaining 6-11
  select protocol 5-51
  settings 5-53
  view Points List in web browser 5-56
Do not default Remote Input ID check box 5-79
DOS Partition Alarm message 7-12
Downgrade
  firmware 10-14
  software 10-13
Download
  files from relay 10-3
  settings to relay 10-7
Drag and drop files 4-3
Duplicate
  device settings 10-7
  settings for upgrading 10-5

E

Edition 1 and 2 IEC 61850 5-58
Electrostatic discharge specifications 2-35
Elements 5-4
End of life 10-31
EnerVista UR setup
  command line interface C-1
  drag and drop files 4-3
  event recorder 4-2
  firmware upgrade or downgrade 10-14
  installation 3-52
  oscillography 4-2
  requirements 3-51
  restart relay 5-1
Engineer
  command to force user logoff 7-9
  create logic diagram 4-62
  Error messages 4-70
  toolbar 4-80
  Warning messages 4-71
Enhanced front panel
  FlexLogic 5-197
  interface 4-16
  IP rating 2-34
  keypad 4-38
  labels 4-43
  LEDs 4-39, 5-125
  navigation 4-50
  order codes 2-7
  pushbuttons 5-129
  Rev. 1 and 2 explained 3-2
  specifications 2-23
  use, change setting 4-52
Environment backup 10-9
Equations
  definite time curve 5-226, 5-267
  FlexCurves 5-226
  FlexLogic 5-215
  FlexLogic, protect 4-10
  IAC curves 5-224
  IEC curves 5-223
  IEEE curves 5-222
Equipment Mismatch message 7-11, 7-17
Error messages 7-10
  device not recognized 10-13
  in Engineer 4-70
Ethernet
  actual values 6-9
  configuration 3-61
  port failure monitoring 5-38
  port settings 5-45
  port, turn on or off 5-45
  ports on rear panel 3-12
  Quick Connect 3-66
Event cause indicators 4-39
Event Cause LEDs 4-41
Event recorder
  actual values 6-28
  clearing 5-41, 7-2
  records explained 4-2
  specifications 2-25
  system logs 5-25
  via EnerVista software 4-2
  view event records 6-28
Events setting 5-5
Export settings to file 10-8

F

F485 3-51
Factory default reset 5-8, 5-22, 7-3
Far-End Fault Indication 5-46
Fast form-C relay specifications 2-29
Fast transient testing specifications 2-35
Features 2-1
Feeder
  single-line diagram 4-22

Fiber signal loss detection 5-46
File transfer by IEC 61850 5-103
File transfer by TFTP 5-104
Files
  delete 10-29
  download from relay 10-3
  drag and drop 4-3
  protect FlexLogic with password 4-10
  protect with password 4-8
  transfer from relay 4-18
  transfer to relay 4-1, 4-18
Firmware not supported by EnerVista 10-14
Firmware revision 6-32
Firmware upgrade or downgrade 10-14
Firmware version does not match EnerVista 10-13
First Ethernet Fail
  error message 7-13
  set alarm 5-38
Flash memory 10-29
Flash memory data storage 3-16
Flash messages 5-26
Flex State parameters
  actual values 6-8
  settings 5-135
  specifications 2-23
FlexAnalog parameters A-1
FlexCurves
  equation 5-226
  settings 5-165
  specifications 2-23
  table 5-165
FlexElements
  actual values 6-22
  direction 5-217
  FlexAnalogs A-33
  FlexLogic operands 5-200
  hysteresis 5-217
  logic diagram 5-216
  pickup 5-217
  settings 5-215
  specifications 2-23
FlexLogic
  create logic diagram with Engineer 4-62
  edit with equation editor 5-215
  equation editor 5-215
  equation example 5-287
  error message 7-11
  evaluation 5-209
  example 5-210
  gate characteristics 5-208
  lock equations 4-10
  lock equations to serial number 4-12
  operands 5-196
  operators 5-208
  rules 5-209
  security 4-10
  specifications 2-23
  status in single-line diagram of graphical front panel 4-32
  timer settings 5-215
  worksheet 5-212
Force contact inputs 5-347
Force contact outputs 5-348, 5-350
Foreign language
  keyboard 4-56
  setting 5-26
Form-A relay
  actual values 6-6
  high-impedance circuits 3-20
  outputs 3-19
  specifications 2-29
Form-C
  actual values 6-6
  critical failure relay 3-15
  order codes 2-7
  outputs 3-19
  replacement modules 2-13
  specifications 2-29
FPGA
  revision 6-32
  upgrade 10-15
Frequency metering
  actual values 6-20
  specifications 2-26
Frequency specifications 2-26
Frequency tracking 6-21
Frequency, nominal 5-148

Front panel 3-2
clear 5-332
custom labels 4-43
dimensions 3-2
install 10-15
interface 4-16
keypad 4-38
labels 4-43
language 5-26
LEDs 4-39
number of characters 4-18
order code with two lines on basic panel 4-38
password change 4-59
plastic protective film 10-20
pushbuttons 5-129
specifications 2-33
switch between enhanced and basic 3-52
trouble message 7-13
types 4-16
use 4-16
use in EnerVista 4-18, 6-3
Function setting 5-5
Fuse failure 5-320
Fuse specifications 2-28
Fuses not field-replaceable 10-30

G

G.703 3-40
wire size 3-40
Gates, logic explained 4-83
Gateway address 5-48
GE type IAC curves 5-225
Getting help 1-2
GFP Version Mismatch message 7-13
GGIO Ind Oscill message 7-13
GOOSE
actual values 6-24
FlexAnalogs A-33
Process Bus Module limitations 5-68
Process Bus with IEC 61850 Ed 2 5-58
settings 5-68
simulation operands 5-208
simulation settings 5-349
GOOSE & SV simulation settings 5-349
Graphical front panel 10-15
actual value menu not activated 4-53
actual values, phasors 4-57
alarm acknowledge, reset 4-34, 6-3, 6-4
alarm setup 5-36
annunciator editor 4-35
date and time 5-30
explained 4-19
FlexLogic 5-197
Home page configuration 5-29
interface 4-18
IP rating 2-34
labels 4-49
LEDs 4-42, 5-125
Metering Editor 4-36
navigation 4-51
navigation keys 4-38
no display 5-31
order codes 2-7
phasor diagram 4-57, 5-32
plastic protective film 10-20
pushbutton testing 7-3
pushbuttons 5-129
pushbuttons 9 to 16 4-30
settings 5-28
settings, breaker 5-156
settings, switch 5-162
single-line diagrams 4-21
specifications 2-30, 2-33
time 5-30
USB port 5-111
use, change setting 4-53
view LEDs and pushbuttons in software 6-4
Ground current metering 6-18
Ground IOC
FlexLogic operands 5-200
logic diagram 5-251
settings 5-250
specifications 2-19
Ground TOC
FlexLogic operands 5-200
logic diagram 5-250
settings 5-249
specifications 2-18
Group 1 switch after powerup 5-221
Grouped elements 5-220
Guarantee D-1

H

HardFiber
Brick Trouble message 7-18
interface module described 3-18
order codes for compatible URs 2-7
remote resources actual values 6-24
remote resources settings 5-146
self-test errors 7-16
Harmonic content 6-20, 6-21

Harmonics
actual values 6-20, 6-21
FlexAnalogs A-7
specifications 2-25, 2-26
Heartbeat messages 5-69, 5-72
Help, getting 1-2
Hexadecimal convert to decimal 5-111
Home page configuration 5-29
HSR
actual values 6-28
explained 5-174
support 2-2
HTTP 5-103
port, close 5-103
Humidity specifications 2-34
Hysteresis 5-217

I

IAC curves 5-224
ICD file 5-79
IEC 60870-5-103 protocol
explained 5-106
select protocol 5-51
settings 5-106
IEC 60870-5-104 protocol
connections remaining 6-11
port, close 5-105
select protocol 5-51
settings 5-104
IEC 61850 protocol
DstMAC addresses message 5-71
Edition 1 and 2 support 5-58
explained 5-57
file transfer 5-103
heartbeat messages 5-69, 5-72
IID file 10-8
settings in EnerVista 5-57
specifications 2-30
IEC CID files 5-60
IED setup 3-52
IEEE C37.94 communications 3-47
IEEE curves 5-222
IID file 3-68, 5-60, 10-8
import preferences 10-9
Import SCL file when using Process Bus Module 5-68
Import settings file 3-68
Import settings from SCD or CID file 10-12
In service indicator 7-10
In Service LED 3-49
Incompatible device order codes or versions 10-14
Inputs
AC current specifications 2-26
AC currents 5-147
AC voltage 5-147
AC voltage specifications 2-26
contact input specifications 2-27
contact inputs 5-325, 5-347
DCmA input specifications 2-27
DCmA inputs 3-31
direct input specifications 2-27
IRIG-B 3-37
IRIG-B specifications 2-27
RTD inputs 3-31
virtual 5-327
Installation 3-2
activate relay 3-49
add UR devices with auto discovery 3-63
communications 3-34
CT inputs 3-17
front panel 10-15
RS485 3-35
set relay to Programmed 3-49
settings 5-145
Instantaneous overcurrent
see Phase, Ground, and Neutral IOCs
Interface
front panel 4-16
software 4-1
Internet access 5-103
Inter-relay communication specifications 2-32
Inverse time undervoltage 5-267
IOC
see Phase, Ground, and Neutral IOCs
IP address
enter in software 5-45
enter on front panel 3-54, 4-38
gateway 5-48
rules 3-54
view 5-45
IP address migration 3-68
IP rating 2-34
IP54 for enhanced front panel 3-2
IRIG-B
connection on rear panel 3-12
explained 3-37
port on rear panel 3-12
specifications 2-27
ISO standards 2-36

J

Japanese limited to 10 character input 5-27

K

Keyboard 4-56
Keypad 4-38

L

Labels, front panel 4-43, 4-76
Lamp test 7-3
Language setting 5-26
Latching outputs
  application examples 5-330
  settings 5-329
  specifications 2-28
LC fiber 2-7, 3-12
LC fiber connector 3-13
LED test
  commands 7-3
  FlexLogic operand 5-206
  settings 5-122
  specifications 2-24
LEDs
  clear 5-332
  custom labels 4-43
  explained 4-39
  In Service 3-49
  power supply module 3-16
  settings 5-125
  Trouble 3-49
  view in software for graphical front panel 6-4
License
  open source D-3
  single user 3-52
Link power budget 2-32
Local access denied message 4-61, 5-21
Local access, explained 5-8
Local Setting Authorization 10-14
Lockout from software 5-14
Log in with password 3-67, 5-10
Log in, multiple users cannot 2-5
Log out
  Administrator manually from front panel 5-21
  users forcefully 7-3
Logic diagram
  create 4-62
  explained 4-61
Logic gates, FlexLogic 4-83, 5-209
Logs, system 5-25
Lost password 5-8
Low on Memory message 7-12

M

MAC address
  actual values 6-32
  examples 5-43
  RxGOOSE 5-75
  settings for redundancy 5-46
  TxGOOSE 5-71
Maintenance
  actual values 6-31
  alert error message 7-12
  battery replacement 10-25
  cleaning 2-36
  commands 7-3
  module replacement 10-23
  upgrade or downgrade 10-14
Manufacturing date 6-32
Maximum 6X, 6X wire size 3-21
Maximum CT/VT wire size 3-17
Measurements of UR and panel cutout 3-2
Media storage alarm message 7-15
Memory low message 7-12
Memory requirements 3-51
Menu navigation 4-50
Message about upgrade over Internet 10-14
Messages
  clear front panel 5-332
  error 7-10
  errors and warnings in Engineer 4-69
Metering
  conventions 6-13, 6-14
  editor in graphical front panel 4-36
  frequency specifications 2-26
  power specifications 2-25
  THD specifications 2-26
  voltage specifications 2-25
Microsoft Windows requirement 3-51
Mimic diagrams 4-21
Missing messages, RxGOOSE fail 7-14
MMS connections remaining 6-11
Modbus
  connections remaining 6-11
  enter values in Modbus Analyzer 10-1
  Flex State parameters 5-135
  Modbus Analyzer window 10-1
  port, close 5-51
  register entry 5-111
  settings 5-51
  user map 5-111
Model information, view 6-32
Model number 3-1
Modem connection 3-62
Modification file number 6-32
Module 7R 3-41
Module 7S 3-40
Module Failure message 7-17
Modules
  add and check settings not defaulted 10-24
  communications 3-34
  CT/VT 3-16, 5-7
  order codes 2-13
  power supply 3-15
  replace 10-23
  transducer I/O 3-32

Monitor
actual values 10-1
actual values with Metering Editor 5-32
devices 10-1
use alarms 5-36
Monitoring elements settings 5-309
Mounting 3-2

N

Nameplate, rear 3-1
NAND gate explained 4-83
Navigation keys 4-38
Negative sequence directional overcurrent
characteristics 5-255
FlexLogic operands 5-201
logic diagram 5-256
settings 5-253
specifications 2-20
Negative sequence IOC
FlexLogic operands 5-201
logic diagram 5-253
settings 5-252
specifications 2-19
Negative sequence overvoltage
FlexLogic operands 5-201
logic diagram 5-271
settings 5-270
specifications 2-22
Negative sequence TOC
FlexLogic operands 5-201
logic diagram 5-252
settings 5-251
specifications 2-19
Network settings migration 3-68
Neutral current unbalance
actual values 6-23
commands 7-8
FlexAnalogs A-29
FlexLogic operands 5-201
logic diagram 5-248
settings 5-244
specifications 2-20
theory of operation 9-14
Neutral directional overcurrent
FlexLogic operands 5-201
logic diagram 5-244
polarization 5-242
settings 5-239
specifications 2-20
Neutral IOC
FlexLogic operands 5-201
logic diagram 5-239
settings 5-238
specifications 2-19
Neutral overvoltage
FlexLogic operands 5-201
logic diagram 5-270
settings 5-269
specifications 2-21
Neutral TOC
FlexLogic operands 5-201
logic diagram 5-238
settings 5-237
specifications 2-18
Neutral voltage unbalance
actual values 6-23
commands 7-6
FlexAnalogs A-29
FlexLogic operands 5-202
logic diagram 5-283
settings 5-279
specifications 2-21
theory of operation 9-7
No connection 5-45
Non-volatile data storage 3-16
Non-volatile latches
FlexLogic operands 5-200
settings 5-219
specifications 2-23
NOR gate explained 4-83
NOT gate explained 4-83
Number of channels exceeds total allowable, SV Stream Config 5-189

O

Obtain list of port numbers 5-45
One-shot
error compiling in Engineer 4-70
FlexLogic operators 5-209
Open source licenses D-3
Operating system
language 3-52
requirements 3-51
Operating temperature 2-34
Operating times 2-18
Operator command to force logoff 7-9
OR gate explained 4-83
Order codes 2-7
two lines on basic front panel 4-38
update 3-62, 7-3
view as actual values 6-32
Oscillatory GOOSE maintenance message 7-13
Oscillatory transient testing specifications 2-35

Oscillography
actual values 6-30
clearing 5-41, 7-2
how to 5-119
settings 5-118
specifications 2-24
via EnerVista software 4-2
view waveform in actual values window 6-30
view waveform in event record 6-28
Out of service 5-1
Outputs
contact outputs 5-328
control power specifications 2-30
critical failure relay specifications 2-29
Fast form-C relay specifications 2-29
Form-A relay 2-28, 3-19
Form-C relay 3-19
Form-C relay specifications 2-29
latching output specifications 2-28
latching outputs 5-329
virtual outputs 5-331
Over Temperature message 7-15
Overcurrent curves
FlexCurves 5-226
IAC 5-224
IEC 5-223
types 5-221
Overvoltage
auxiliary 2-22, 5-271
bank phase 5-275
negative sequence 5-270
negative-sequence 2-22
neutral 2-21, 5-269
phase 2-21, 5-202, 5-268

P

Panel cutout 3-2
Parallel Redundancy Protocol
actual values 6-12
explained 5-47
settings 5-45
settings with Process Bus Module 5-172
specifications 2-31
Parity 5-42
Part numbering 2-7
Passwords
authentication by device or server 5-16
bypass authentication 5-23
change 4-59
change after installation 3-67
change does not take relay out of service 5-1
command 4-60, 5-10
default 5-14
explained 2-4
FlexLogic operands 5-207
lockout 4-61, 5-14
lost password 5-8
requirements 5-8
reset to factory defaults 5-8
rules 5-8
settings 4-60, 5-10
settings templates 4-8
wrong entry 4-61
PBM PTP settings 5-175, 5-177
Permissive functions 5-267
Per-unit quantity 5-4
Phase angle metering 6-14
Phase current balance FlexAnalogs A-28
Phase current metering 6-17
Phase current unbalance
actual values 6-23
commands 7-7
FlexLogic operands 5-200
logic diagram 5-236
settings 5-233
specifications 2-20
theory of operation 9-11
Phase directional overcurrent
FlexLogic operands 5-202
logic diagram 5-233
phase A polarization 5-231
settings 5-230
specifications 2-19
Phase IOC
FlexLogic operands 5-202
logic diagram 5-230
settings 5-229
specifications 2-19
Phase overvoltage
FlexLogic operands 5-202
logic diagram 5-269
settings 5-268
specifications 2-21
Phase rotation 5-148
Phase TOC
FlexLogic operands 5-202
logic diagram 5-229
settings 5-227
specifications 2-18

Phase undervoltage
FlexLogic operands 5-203
logic diagram 5-268
settings 5-267
specifications 2-21
Phasor display graphical front panel 4-57, 5-32
Ping test times out 5-45
Plastic film on front panel 10-20
PMU
status of activation 6-32
Points List, view DNP 5-56
Port
Ethernet, turn on or off 5-45
failure monitoring 5-38
HTTP, close 5-103
IEC 60870-5-104, close 5-105
Modbus, close 5-51
on rear panel 3-12
settings for Process Bus Module 5-180
TFTP, close 5-104
USB 4-18
Port number
combinations with protocols 5-52
connectivity report of those used 4-76
DNP 5-53
HTTP 5-103
IEC 60870-5-104 5-104
list of 5-45
Modbus 5-51
Modbus during installation 3-62
RADIUS 5-19
SNTP 5-115
speed for Process Bus Module 3-13
system log 5-19, 5-20
TFTP 5-104
Power metering
specifications 2-25
values 6-19
Power off, save data first 3-16
Power supply
description 3-15
diagram 3-12
LED on module 3-16
removal to replace battery 10-25
RH/RL vs SH/SL 10-25
specifications 2-28
wire size 3-16
Power system settings 5-148
Precision Time Protocol
actual values for port state 6-9
clock settings 5-112, 5-178, 6-27
port behavior 5-46
settings 5-113
settings with Process Bus Module 5-175, 5-177, 6-27
specifications 2-31
Preferences
comparing settings 10-7
Engineer 4-77
IEC 61850 5-63
import file 10-9
Preserve custom attributes importing SCD/CID files 10-9
Press Reset Key message 7-15
Print front panel labels 4-43, 4-76
Process bus
error messages 7-16
order codes for compatible URs 2-7
overview 3-18
Process Bus Failure message 7-17
Process Bus GOOSE
works with IEC 61850 Ed 2 5-58
Process Bus Module
actual values 6-25
FlexLogic operands 5-207
GOOSE limitations 5-68
not supported in IEC 61850 Ed. 1 5-58
PBM PTP settings 5-175, 5-177
port speeds 3-13
ports 5-180
PRP 5-172
remote resources actual values 6-24
SV Stream Config settings 5-180
Time Sync settings 6-27
time with PTP 5-175, 5-177, 6-27
Process Bus Trouble message 7-18
Product information
actual values 6-32
Device Connectivity Report in Engineer 4-76
firmware revision 6-32
Programmed mode 3-49
Protection elements 5-4
Protection Summary interface 3-65, 4-5, 5-284
Protocol selection 5-51
Prototype Firmware message 7-14
PRP
actual values 6-12
explained 5-47
Process Bus Module 5-172
settings 5-45
settings with Process Bus Module 5-172
specifications 2-31
PTP
actual values for port state 6-9
clock settings 5-112, 5-178, 6-27
port behavior 5-46
settings 5-113
settings with Process Bus Module 5-175, 5-177, 6-27
specifications 2-31
pu quantity 5-4

Pushbuttons
control FlexLogic 5-197
control logic diagram 5-129
control settings 5-127
control specifications 2-24
testing 7-3
user-programmable FlexLogic 5-208
user-programmable logic diagrams 5-134
user-programmable settings 5-129
user-programmable specifications 2-24
view in software for graphical front panel 6-4

Q

Quick Connect 3-65, 3-66

R

RADIUS server
authentication 5-16
explained 2-4, 2-7
setup B-1
RAM Filesystem Fail message 7-11
RAM required 3-51
Reactive power
actual values 6-19
specifications 2-25
Real power 6-19
Real power specifications 2-25
Real-time clock
actual values for synchronization 6-9
FlexAnalogs A-29
settings 5-112, 5-178, 6-27
settings with Process Bus Module 5-175, 5-177, 6-27
Reboot relay
using EnerVista 5-1
using relay 7-3
Recloser curves 5-168, 5-227
Redundancy
HSR support 2-2
power supply 10-25
PRP actual values 6-12
PRP explained 5-47
settings 5-45
SNTP 5-115
specifications 2-31
Relay architecture 5-194
Relay maintenance 7-3
Relay name 5-145
Release Notes 10-14
Remote access of front panel in EnerVista 4-18, 6-3
Remote access, explained 5-8
Remote Input ID check box 5-79
Remote resources
actual values 6-24
settings 5-146
Remote Setting Authorization 10-14
Repair 1-2, 10-30, D-1
Replace battery 10-25
Replace Battery message 7-13
Replace front panel 10-15
Replacement modules 2-13, 10-23
Requirements for installation 3-51
Reserved settings 4-4
Reset alarm 6-4
Reset to factory defaults 5-8, 5-22
Resetting
FlexLogic operands 5-207
setting to clear LEDs and messages 5-332
to factory defaults 5-8, 7-3
Restart relay
using EnerVista 5-1
using relay 7-3
Restore settings 10-8
Revision history D-1
RF immunity specifications 2-35
RFI, conducted specifications 2-35
RH/RL power supply module 10-25
RJ-45 ..... 2-7, 3-12
RMS voltage specifications 2-25
Roles for login 2-5
RRTD Comm Fail message 7-14
RS232
baud rate 5-42
configuration 3-65
specifications 2-30
wiring 3-33
RS422
configuration 3-44
timing 3-45
two-channel application 3-44
RS485
description 3-35
limitation with CyberSentry 5-17
port on rear panel 3-12
settings 5-42
specifications 2-30
RTD inputs
actual values 6-24
FlexAnalogs A-1, A-27
settings 5-339
RTD Trouble message 7-18
Rules for passwords 5-8
RxGOOSE
actual values 6-24
FlexAnalogs A-33
settings 5-74
RxGOOSE Fail message 7-14
RxGOOSE Offline message 7-14

S

Sampled value explained 5-172
Save settings 4-1

Saving setting does not take relay out of service 5-1
SCADA protocol selection 5-51
SCD file
  import 10-12
  import preferences 10-9
SCL compatible 5-57
SCL file import 5-79
  Edition 1 versus 2 5-58
  preferences 10-9
  Process Bus Module and GOOSE error 5-68
Second Ethernet Fail
  error message 7-13
  set alarm 5-38
Security
  commands 7-9
  delete files and records 10-29
  EnerVista and UR secure with SSH 2-4
  failed authentication lockout 5-22
  forceful user logout 7-3
  lock FlexLogic equations 4-10
  lock settings 4-6
  password for settings template 4-8
  passwords for settings and commands 4-60, 5-10
  RADIUS server for user authentication B-1
  role-based user access 2-5
  settings 5-20
  software options 2-33
  specifications 2-33
  system and event logs 5-25
Security audit list of port numbers 5-45
Selector switch
  actual values 6-8
  application example 5-292
  FlexLogic operands 5-203
  logic diagram 5-294
  settings 5-287
  specifications 2-24
  timing 5-291
Self-tests
  description 7-10
  error messages 7-10
  FlexLogic operands 5-208
  user-programmable 5-126
Serial number 3-1, 4-12, 6-32
Serial ports
  device setup with 3-60
  location 4-16
  settings 5-42
  specifications 2-30
Server authentication 5-16
Service life expected 10-3
Service Report 1-2
Setting groups 5-220, 5-221, 5-285
  active setting group 5-220
  FlexLogic operands 5-203
  troubleshooting 5-221
Settings 5-1
  back up 5-60, 10-8
  change 4-52
  change does not take relay out of service 5-1
  compare 10-7
  control user accounts 5-14
  convert 10-5
  default to factory defaults 7-3
  edit 4-52
  export 10-8
  import 3-68
  lock 4-6
  not updated automatically among computers 3-64
  read from device with Modbus Analyzer 10-1
  restore 10-8
  upgrade 10-5
  write to device with Modbus Analyzer 10-1
Settings file 5-60
  description 4-1
  import 3-68
  takes relay out of service when loaded 4-2
  traceability 4-13
  transfer with USB stick 4-18
Settings password 4-60, 5-10
Settings Save Error message 7-15
Settings templates
  description 4-6
  edit 4-7
  enable 4-6
  password protection 4-8
  remove 4-10
  view 4-8
SFP
  explained 3-11
  module fail message 7-14
  photo 10-21
SH/SL power supply module 10-25
Show Custom Layout button 5-181
Show Enabled button 5-181
Signal loss detection for fiber 5-46
Signal sources
  description 5-6
  metering 6-17
  settings 5-149
Simulation
  operands 5-208
  settings 5-349
Simulation bit 5-344
Single-line diagram 2-3
  create, explained 4-21
  save as separate file 4-25
Site Targets 10-1
Size of UR and panel cutout 3-2
SNTP Failure message 7-14
SNTP protocol
  accuracy specifications 2-31
  redundant source 5-115
  settings 5-115

Software
installation 3-52
interface explained 4-1
language 5-27
license 3-52
system requirements 3-51
update or downgrade 10-13
Source frequency 6-20
Source transfer schemes 5-267
Sources
description 5-6
example of use 5-151
FlexAnalogs A-29
metering 6-17
settings 5-149
Special characters 4-56
Specifications 2-17
ST fiber 2-7, 3-12
ST fiber connector 3-13
Standards, certification 2-36
Status LEDs 4-41, 4-42
Stop blinking alarm 4-34
Storage Media Alarm message 7-15
Storage, UR 10-30
Substation D400 3-69
Support, technical 1-2
Surge immunity specifications 2-35
SV simulation settings 5-349
SV Stream Config message troubleshooting 5-186
SV Stream Config settings 5-180
stream filtering criteria 5-185
SV Stream Trouble message 7-15
Switch
actual values 6-8
control with IEC 61850 5-96
IEC 61850 Edition 1 and 2 5-58
settings 5-159, 5-287
Synchronize
clock using time source 5-112, 5-178, 6-27
clocks of UR devices to local computer 5-113
files between offline and online 4-69
Synchronize Devices setting for clocks 5-113
Syslog 5-25
System and device information 4-76
System Exception message 7-15
System Failure message 7-11
System frequency 5-148
System logs 5-25
System requirements 3-51
System setup 5-147

T

Targets
defined 4-20
menu 7-10
messages 7-10
overview by device 10-1
settings 5-5
TBD 10-9
TCP port number for web access 5-103
TDR Trouble message 7-18
Technical support 1-2
files 1-2, 10-3
Teleprotection
actual values 6-6
clearing counters 7-2
FlexLogic operands 5-204
logic diagram 5-338
overview 5-336
settings 5-144, 5-337
specifications 2-27
Temp Monitor message 7-15
Temperature
FlexLogic monitor operand 5-208
operating and storage 2-34
Test voltages 3-15
Testing
force contact inputs 5-347
force contact outputs 5-348, 5-350
lamp test 7-3
LEDs 7-3
pushbuttons 7-3
self-test error messages 7-10
settings 5-344
TFTP
port, close 5-104
put cannot be done 5-104
settings 5-104
THD metering 6-20, 6-21
analog channel correspondence 5-120
FlexAnalogs A-17
specifications 2-26
The URS file is part of a device folder 10-11
Thermal overload protection
logic diagram 5-324
settings 5-322
specifications 2-22
Third Ethernet Fail
error message 7-13
set alarm 5-38
Tilda on front panel 4-18

Time
actual values 6-9, 6-31
FlexLogic timer settings 5-215
graphical front panel format 5-30
operating 6-32
overwritten by external source 7-3
set 5-29, 5-112, 5-178, 6-27, 7-3
synchronize 5-112, 5-178, 6-27
Time of day timer
actual values 6-8
FlexLogic operands 5-200, 5-201, 5-204
logic diagram 5-300
settings 5-299
specifications 2-24
Time overcurrent
see Phase, Neutral, and Ground TOCs
Time Sync settings 6-27
Timeout, connection 5-52
To Install Settings message 7-11
TOC
ground 5-249
neutral 5-237
phase 5-227
specifications 2-18
Toolbar 4-80
Torque for screws 2-36, 3-12, 3-21
Total harmonic distortion A-17
Traceability
data 4-14
overview 4-13
rules 4-15
view data 4-15
Tracking frequency 6-21
Transducer I/O
actual values 6-24
settings 5-338
wiring 3-32
Transfer files to relay 10-7
Transfer files with USB drive 4-18
Triangle in Offline Window 4-69
Trip bus
FlexLogic operands 5-204
logic diagram 5-285
settings 5-283
Trip LEDs 5-125
Trouble indicator 7-10
Trouble LED 3-49
Troubleshooting
access to device 3-64
breaker not working 5-305
connection 5-45
dark graphical front panel 5-31
Engineer 4-70, 4-71
error messages 7-10
setting not working 5-305
SV Stream Config window 5-186
unit not programmed error 5-145
Turn off alarm 4-34
TxGOOSE
actual values 6-12
settings 5-69
TxGOOSEa & TxGOOSEb assigned to PBM message 5-71

U

UDP for TFTP 5-104
UL certification 2-36
Unable to connect to relay 3-64, 5-45
Unable to put relay in flash mode 10-14
Unauthorized access
commands 5-41
resetting 7-2
Undervoltage
characteristics 5-266
phase 2-21, 5-267
settings 5-267
Uninstall 10-29
Unit Not Calibrated message 7-15
Unit not programmed 5-145, 7-12
Unpacking the relay 3-1
Unreturned messages alarm 5-144
Update SCL files prompt 4-69
Update settings with Convert Device Settings 10-5
Updates
device not recognized 10-13
firmware 10-14
FPGA 10-15
instruction manual 3-1
order code 7-3
single-line diagrams not retained 4-25
software 10-13
Upgrade device settings 10-5
Upgrade over Internet message 10-14
Upload settings to relay 10-7
URS file does not include IEC 61850 configuration 10-11
URS file is part of a device folder 10-11
URS settings file 3-68, 5-60, 10-8
USB port
graphical front panel 4-18, 5-111
Quick Connect 3-66
specifications 2-30
USB to serial converter 3-60
User accounts
add 5-14
authentication by device or server 5-16
multiple login limitation CyberSentry 2-5
passwords for settings and commands 4-60, 5-10
permissions by role 2-5
permissions, set 5-14
User-definable displays
example 5-137
invoking and scrolling 5-136
settings 5-136
specifications 2-24

User-programmable fault report
actual values 6-28
clearing 5-41, 7-2
settings 5-117
User-programmable LEDs
custom labels 4-43
defaults 4-42
settings 5-125
specifications 2-23
User-programmable pushbuttons
FlexLogic operands 5-208
graphical front panel buttons 9 to 16 4-30
logic diagrams 5-134
settings 5-129
specifications 2-24
testing 7-3
User-programmable self-test settings 5-126

V

Vibration testing specifications 2-35
Virtual inputs
actual values 6-5
commands 7-2
explained 5-327
FlexLogic operands 5-206
logic diagram 5-327
settings 5-327
Virtual outputs
actual values 6-7
explained 5-332
FlexLogic operands 5-206
settings 5-331
Voltage banks 5-147
Voltage deviation specifications 2-35
Voltage differential
actual values 6-23
commands 7-5
FlexAnalogs A-28
FlexLogic operands 5-205
logic diagram 5-275
settings 5-272
specifications 2-18
theory of operation 9-3
Voltage elements 5-266
FlexElement is phase to ground 5-218
Voltage metering
actual values 6-18
specifications 2-25
Voltage Monitor message 7-15
Voltage restraint characteristic 5-228
VT fuse failure
FlexAnalogs A-33
FlexLogic operands 5-203
logic diagram 5-321
settings 5-320
VT inputs 3-16, 3-17, 5-7, 5-147
VT wiring 3-17
VTFF 5-320, A-33

W

Warning messages in Engineer 4-71
Warning symbol in Offline Window 4-69
Warning, firmware upload not supported 10-14
Warranty D-1
Waveform
view in actual values window 6-30
view in event record 6-28
Waveform files, view 4-80
Web access port 5-103
Web server protocol 5-103
Windows 10
disconnect USB cable when upgrading 10-13
driver for USB to serial cable 3-60
Windows requirement 3-51
Wire size
CT/VT 3-17
F485 converter 3-51
G.703 interface 3-40
module 7S 3-40
modules 6X, 6W 3-21
modules 7T, 7W 3-44
power supply module 3-16
RS422 interface 3-44
Wiring diagram 3-14
Withdraw UR from operation 10-29
Wrong Transceiver message 7-16

X

XOR gate explained 4-83

Y

Yellow caution icon in Offline Window 4-69

Z

Zero-sequence core balance 3-17

GE Vernova
650 Markland Street
Markham, Ontario
Canada L6C 0M1
Worldwide telephone: +1 905 927 7070
Europe/Middle East/Africa telephone: +34 94 485 88 54
North America toll-free: 1 800 547 8629
Fax: +1 905 927 5098
Worldwide e-mail: GA.support@gevernova.com
Website: https://www.gevernova.com/grid-solutions/multilin/