GE VERNOVA

UR Family D60

Instruction Manual

Line Distance Protection System

Product Version: 8.80
Publication Reference: D60-1601-0089-88x-2

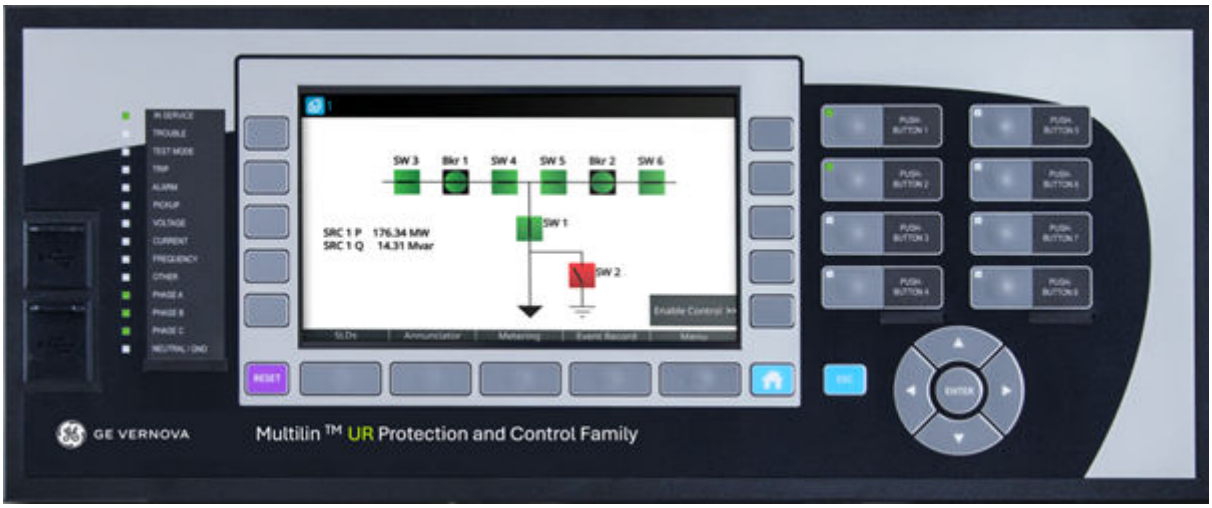

Copyright statement

Copyright © 2026 GE Vernova. All rights reserved.

GridBeats, Universal Relay, Multilin, MiCOM, S1 Agile, P40 Agile, DS Agile, EnerVista, CyberSentry, HardFiber, FlexLogic, FlexElement, FlexCurve, FlexAnalog, FlexInteger and FlexState are trademarks or registered trademarks of GE Vernova

The contents of this manual are the property of GE Vernova. This documentation is provided on license and may not be reproduced in whole or in part without the permission of GE Vernova. The content of this manual is for informational use only and is subject to change without notice.

Disclaimer

It is the responsibility of the user to verify and validate the suitability of all GE Vernova products. This equipment must be used within its design limits. The proper application including the configuration and setting of this product to suit the power system assets, is the responsibility of the user, who is also required to ensure that all local or regional safety guidelines are adhered to. Incorrect application of this product could risk damage to property, the environment, personal injuries or fatalities and it is the sole responsibility of the person/entity applying and qualifying the product for use.

The content of this document has been developed to provide guidance to properly install, configure and maintain this product for its intended applications. This guidance is not intended to cover every possible contingency that may arise during commissioning, operation, service, or maintenance activities. Should you encounter any circumstances not clearly addressed in this document, please contact your local GE Vernova service site.

It is the sole responsibility of the user to secure their network and associated devices against cybersecurity intrusions or attacks. GE Vernova and its affiliates are not liable for any damages or losses arising from or related to such security intrusion or attacks.

The information contained in this document is subject to change without notice.

Warranty

GE Vernova warrants most of its manufactured products for 10 years from the date of shipping.

For warranty details including any limitations and disclaimers, see the Terms and Conditions at:

https://www.gevernova.com/grid-solutions/multilin/warranty.htm

Major changes

For information on the updates included in this release of the manual, please refer to the latest release notes.

Open source licenses

The optional IEC 61850-9-2LE/IEC 61869 Process Bus Modules include open source code. See the UR-OpenSourceLicense folder installed at the root level with the software, such as at C:\Program Files (x86)\GE Power Management\URPC

Contents

Chapter 1 Introduction 1

1.1 Chapter Overview 2
1.2 Foreword 3
1.2.1 Target Audience 3
1.2.2 Typographical conventions 3
1.2.3 Nomenclature 4
1.3 Cautions, warnings and notes 5
1.3.1 General Cautions and Warnings 5
1.4 For Further Assistance 8
1.4.1 Repairs 8

Chapter 2 Product Description 9

2.1 Chapter Overview 10
2.2 Product Overview 11
2.3 Signal processing 16
2.4 Communication Functions 18
2.5 Order codes 19
2.5.1 Order codes for UR 19
2.5.2 Order codes for replacement modules 19

Chapter 3 Specifications 21

3.1 Chapter Overview 22
3.2 Protection elements 23
3.2.1 Phase distance 23
3.2.2 Phase distance operating time curves 23
3.2.3 Ground distance 25
3.2.4 Ground distance operating time curves 26
3.2.5 Line pickup 28
3.2.6 Phase/neutral/ground time overcurrent 28
3.2.7 Phase/neutral/ground instantaneous overcurrent 29
3.2.8 Negative sequence time overcurrent 29
3.2.9 Negative sequence instantaneous overcurrent 30
3.2.10 Phase directional overcurrent 30
3.2.11 Neutral directional overcurrent 31
3.2.12 Negative sequence directional overcurrent 31
3.2.13 Wattmetric zero-sequence directional 32
3.2.14 Sensitive directional power 32
3.2.15 Phase undervoltage 32
3.2.16 Auxiliary undervoltage 33
3.2.17 Phase overvoltage 33
3.2.18 Compensated overvoltage 33
3.2.19 Neutral overvoltage 34
3.2.20 Auxiliary overvoltage 34
3.2.21 Negative sequence overvoltage 34
3.2.22 Underfrequency 34
3.2.23 Overfrequency 35
3.2.24 Rate of change of frequency 35
3.2.25 Breaker failure 36
3.2.26 Breaker arcing current 36
3.2.27 Breaker flashover 36
3.2.28 Breaker restrike 36

3.2.29	Synchrocheck	37
3.2.30	Autoreclose	37
3.2.31	Pilot-aided schemes	37
3.2.32	Trip output	37
3.2.33	Power swing detect	38
3.2.34	Load encroachment	38
3.2.35	Open pole detector	39
3.2.36	Thermal overload	39
3.2.37	Trip bus (trip without FlexLogic)	39
3.2.38	Harmonic detection	39
3.2.39	Multi-range signal oscillation detector	40
3.3	**User-programmable elements**	**41**
3.3.1	FlexLogic	41
3.3.2	FlexCurves	41
3.3.3	FlexStates	41
3.3.4	FlexElements	41
3.3.5	Non-volatile latches	42
3.3.6	User-programmable LEDs	42
3.3.7	LED test	42
3.3.8	User-definable displays	42
3.3.9	Control pushbuttons	42
3.3.10	User-programmable pushbuttons	42
3.3.11	Selector switch	43
3.3.12	Digital elements	43
3.4	**Monitoring**	**44**
3.4.1	Oscillography	44
3.4.2	Event recorder	44
3.4.3	Data logger	44
3.4.4	Fault locator	44
3.4.5	Phasor measurement unit	45
3.5	**Metering**	**46**
3.5.1	RMS Current: Phase, Neutral and Ground	46
3.5.2	RMS Voltage	46
3.5.3	Real Power (Watts)	46
3.5.4	Reactive Power (VARS)	46
3.5.5	Apparent Power (VA)	46
3.5.6	Watt-hours (Positive and Negative)	46
3.5.7	VAR-hours (Positive and Negative)	46
3.5.8	Frequency	47
3.5.9	Demand	47
3.6	**Power supply**	**48**
3.6.1	Low range	48
3.6.2	High range	48
3.6.3	All ranges	48
3.6.4	Internal fuse	48
3.6.5	Supercapacitor	49
3.7	**Inputs**	**50**
3.7.1	AC current	50
3.7.2	AC voltage	50
3.7.3	Frequency	50
3.7.4	Contact inputs	50
3.7.5	Contact inputs with auto-burnishing	51
3.7.6	DCMA inputs	51
3.7.7	RTD inputs	51
3.7.8	IRIG-B input	51
3.7.9	Direct Inputs	52

3.7.10 Teleprotection 52
3.8 Outputs 53
3.8.1 Form-A relay 53
3.8.2 Latching relay 53
3.8.3 Form-A monitors 53
3.8.4 Form-C and critical failure relay 53
3.8.5 Fast Form-C relay 54
3.8.6 Solid-state output relay 54
3.8.7 Control power external output 55
3.8.8 Direct Outputs 55
3.8.9 DCMA outputs 55
3.9 Communication protocols 56
3.10 Inter-relay communications 58
3.10.1 STP interface options 58
3.10.2 Link power budget and maximum optical input power 58
3.10.3 Typical link distance 59
3.10.4 Losses and margin 59
3.11 CyberSentry security 60
3.12 Graphical front panel 61
3.13 Environmental 62
3.14 Type tests 63
3.15 Production tests 64
3.16 Approvals 65
3.17 Maintenance 66

Chapter 4 Installation 67

4.1 Chapter Overview 68
4.2 Unpack and inspect 69
4.3 Panel cutouts 70
4.3.1 Horizontal units 70
4.3.2 Vertical units 74
4.4 Rear terminal layout 79
4.5 Wiring 82
4.5.1 Typical wiring 82
4.5.2 Dielectric strength 83
4.5.3 Control power 84
4.5.4 Non-volatile data storage 85
4.5.5 CT/VT modules 86
4.5.6 Process Bus Module for HardFiber 87
4.5.7 Contact inputs and outputs 87
4.5.7.1 Contact input and output module assignments 90
4.5.7.2 Contact input and output module wiring 94
4.5.7.3 Contact inputs 96
4.5.7.4 General application considerations 97
4.5.7.5 Use of contact inputs with auto-burnishing 99
4.5.7.6 Use of contact inputs with active impedance 100
4.5.8 Transducer inputs and outputs 101
4.5.9 Communication ports 103
4.5.9.1 General grounding considerations 103
4.5.9.2 RS232 port 105
4.5.9.3 RS485 port 106
4.5.9.4 100BaseFx fiber optic ports 107
4.5.9.5 IRIG-B 107
4.6 Inter-relay communications 109
4.6.1 ESD Protection Guidelines 109
4.6.2 Direct input and output communications 109

4.6.3 Fiber LED and ELED transmitters 112
4.6.4 Fiber laser transmitters 112
4.6.5 RS422 interface 113
4.6.5.1 Two-channel application via multiplexers 114
4.6.5.2 Transmit timing 115
4.6.5.3 Receive timing 116
4.6.6 RS422 and fiber interface 116
4.6.7 IEEE C37.94 interface 117
4.6.8 C37.94SM interface 120
4.7 Activate relay 124
4.8 Software installation 125
4.8.1 EnerVista communication overview 125
4.8.2 System requirements 125
4.8.3 Installing the software 126
4.9 Add device to software 127
4.9.1 Set IP address in UR 127
4.9.2 Test Ethernet connection 128
4.9.3 Internet Configuration 130
4.9.4 Configure serial connection 130
4.9.5 Configure Ethernet connection 131
4.9.6 Configure modem connection 133
4.9.7 Automatic discovery of UR devices 133
4.10 Connect to the relay 135
4.10.1 Connect to the relay in EnerVista 135
4.10.2 Use Quick Connect via front RS232 port 136
4.10.3 Use Quick Connect via front USB port 137
4.10.4 Use Quick Connect via a rear Ethernet port 137
4.11 Set up CyberSentry and change default password 138
4.12 Import settings 139
4.12.1 Import settings from XML file 139
4.12.2 Import settings from device files 142
4.13 Connect to substation gateway 144
4.13.1 Files and records 144

Chapter 5 Interfaces 145

5.1 Chapter Overview 146
5.2 EnerVista 147
5.2.1 EnerVista Introduction 147
5.2.2 Settings Files 147
5.2.3 Event viewing 148
5.2.4 File support 148
5.2.5 Main window 148
5.2.6 Protection summary window 150
5.2.7 Settings templates 151
5.2.7.1 Enable settings template 151
5.2.7.2 Edit settings template 152
5.2.7.3 Add password protection 154
5.2.7.4 View settings template 154
5.2.7.5 Remove settings template 155
5.2.8 Securing FlexLogic equations 156
5.2.8.1 Locking entries in a settings template 156
5.2.8.2 Locking a settings file to a serial number 158
5.2.9 Settings file traceability 159
5.2.9.1 Settings file traceability information 160
5.2.9.2 Online device traceability information 161
5.2.9.3 Additional traceability rules 161

5.2.10 Command line interface 161
5.3 Front panel 168
5.3.1 Basic front panel 168
5.3.1.1 Front panel display 169
5.3.1.2 Navigation keys 170
5.3.1.3 LED indicators 170
5.3.1.4 Labeling 173
5.3.1.5 Menu navigation 174
5.3.1.6 Change settings 175
5.3.2 Enhanced front panel 176
5.3.2.1 Enhanced front panel display 178
5.3.2.2 Navigation keys 179
5.3.2.3 LED indicators 179
5.3.2.4 Labeling 181
5.3.2.5 Menu navigation 185
5.3.2.6 Change settings 187
5.3.3 Graphical front panel 188
5.3.3.1 Home page 189
5.3.3.2 Rolling mode 190
5.3.3.3 Single-line diagrams 190
5.3.3.4 Single-line diagram example 191
5.3.3.5 Single-line diagram editor 195
5.3.3.6 Annunciator 203
5.3.3.7 Annunciator editor 206
5.3.3.8 Metering editor 208
5.3.3.9 Configurable navigation editor 209
5.3.3.10 Navigation keys 210
5.3.3.11 LED indicators 210
5.3.3.12 Labeling 212
5.3.3.13 Menu navigation 213
5.3.3.14 Change settings 214
5.3.3.15 View actual values 218
5.3.4 Breaker control 220
5.3.4.1 Control mode selection and monitoring 220
5.3.4.2 Control of breakers 220
5.3.5 Password control 221
5.3.5.1 Resetting the password in a device without CyberSentry 222
5.3.5.2 Invalid password entry 223
5.4 Logic diagrams 224
5.5 FlexLogic 226
5.5.1 FlexLogic design using Engineer 226
5.5.2 Design logic 228
5.5.2.1 Examples 228
5.5.2.2 Add existing FlexLogic equations 229
5.5.2.3 Create logic diagram 230
5.5.2.4 Compiled results and warning messages 234
5.5.2.5 Rapidly add logic blocks in sequence 237
5.5.2.6 Connect two logic diagrams 237
5.5.2.7 Optimize the logic 238
5.5.2.8 Change logic order 238
5.5.2.9 Search logic 239
5.5.2.10 Exclude sheet from compile 239
5.5.3 Send file to and from device 240
5.5.4 Monitor logic 240
5.5.5 View front panel and print labels 241
5.5.6 Generate connectivity report 242
5.5.7 Preferences 242
5.5.7.1 View menu 242

5.5.7.2 Logic designer 242
5.5.7.3 Logic monitor 244
5.5.7.4 COMTRADE waveforms 245
5.5.8 Toolbars 245
5.5.9 FlexLogic operands 249
5.5.10 FlexLogic rules 253
5.5.11 FlexLogic evaluation 253
5.5.12 FlexLogic example 254
5.5.13 FlexElement base units 259

Chapter 6 CyberSecurity 263

6.1 Chapter Overview 264
6.2 Cybersecurity overview 265
6.3 Security setup 266
6.3.1 Password security 266
6.3.1.1 Password security settings 267
6.3.2 EnerVista security 273
6.3.3 CyberSentry security 273
6.3.3.1 CyberSentry user roles 274
6.3.3.2 CyberSentry settings through EnerVista 276
6.3.3.3 CyberSentry authentication 280
6.3.3.4 CyberSentry settings through the front panel 281
6.4 IEC62351-9 Encryption for R-GOOSE messages 291
6.4.1 Security References and Acronyms 291
6.4.2 Security Key Management 291
6.4.3 Key Distribution Process 292
6.4.3.1 GDOI GROUPKEY-PULL Security Phases 292
6.4.3.2 Rekeying 293
6.4.3.3 Security Associations 293
6.4.3.4 UR Supported Encryption and Signature (Hash) Algorithms 294
6.4.3.5 High Level Sequence of Events for GDOI Pull Exchange 294
6.4.4 Certificate Management 294
6.4.4.1 Simple Certificate Enrollment Protocol 294
6.4.4.2 Online Certificate Status Protocol 295
6.4.4.3 Certificate Security 296
6.4.5 Configuration 296
6.4.6 Commands 301
6.4.7 Advanced Configuration and Troubleshooting 303
6.4.7.1 Using UR Sample Certificates 303
6.4.7.2 SCEP Server Challenge Password and Fingerprint (Thumbprint) Example 304
6.4.7.3 Use of Pull Exchanges vs. Push Messages 304
6.4.7.4 Use of Different Certificate Issuers Between URs and the KDC 305
6.4.7.5 KDC Security Policy Mismatch with UR R-GOOSE Security Setting 305
6.4.7.6 KDC Key Generation Policy 306
6.4.7.7 UR Unicast R-GOOSE 306
6.4.7.8 UR Clock Accuracy 306
6.4.7.9 Network Maximum Transmission Unit (MTU) 307
6.4.8 Status 307
6.4.8.1 M2M Security Status Certificates 307
6.4.8.2 Syslog Security Events 309
6.4.8.3 UR Self-Tests and Flexlogic Operands 310
6.4.9 Secure R-GOOSE Configuration Procedure 313
6.4.9.1 Non-Secure R-GOOSE Configuration 314
6.4.9.2 Test Key 314
6.4.9.3 Certificates 314
6.4.9.4 UR GDOI Configuration 316
6.4.9.5 KDC Configuration 316

6.4.9.6 Status of Security Keys in the URs 316
6.5 RADIUS server configuration 318

Chapter 7 Process bus module 320

7.1 Chapter Overview 321
7.2 Overview 322
7.3 Parallel Redundancy Protocol (PRP) 323
7.4 High-availability seamless redundancy (HSR) 325
7.5 Process Bus Settings 327
7.6 SV Stream Configuration 333
7.6.1 SV stream logic 337
7.6.2 Message troubleshooting 338
7.6.3 SV quality processing 338
7.6.4 SV simulation processing 339
7.6.5 SV stream settings 339
7.7 Remote resources configuration 350

Chapter 8 Phasor Measurement Unit 351

8.1 Chapter Overview 352
8.2 Synchrophasor implementation 353
8.3 Implementation of IEC 61850-90-5 354
8.4 Example of creation of different data sets 355
8.5 Example of CFG-2 based configuration 356
8.6 Modification of SYNC word 357
8.7 Settings 358
8.7.1 PMU instance settings 358
8.7.1.1 Basic configuration 359
8.7.1.2 PMU calibration 364
8.7.1.3 PMU triggering overview 365
8.7.1.4 PMU recording 372
8.7.2 Aggregators 373
8.7.2.1 C37.118 Aggregator configuration 374
8.7.2.2 IEC 61850-90-5 aggregator configuration 377
8.7.3 Control blocks 378
8.7.4 Time Quality 380

Chapter 9 Settings 382

9.1 Chapter Overview 383
9.2 Overview 384
9.2.1 Introduction to elements 384
9.2.2 Base quantities 385
9.2.3 Introduction to AC sources 386
9.2.4 CT/VT configuration 386
9.3 Settings menu 388
9.4 Product setup 392
9.4.1 Security 392
9.4.2 Display properties 392
9.4.3 Clear relay records 394
9.4.4 Communications 395
9.4.4.1 Communications settings menu 395
9.4.4.2 Serial ports 396
9.4.4.3 Network 397
9.4.4.4 IPv4 route table 400
9.4.4.5 Modbus protocol 400

9.4.4.6 Protocols & Authority 401
9.4.4.7 DNP protocol 403
9.4.4.8 DNP / IEC 60870-5-104 point lists 407
9.4.4.9 Web server HTTP protocol 407
9.4.4.10 TFTP protocol 408
9.4.4.11 IEC 60870-5-104 protocol 409
9.4.4.12 IEC 60870-5-103 protocol 410
9.4.4.13 USB port 414
9.4.5 Modbus user map 415
9.4.6 Real-time clock 415
9.4.6.1 Precision time protocol (1588) 417
9.4.6.2 SNTP protocol 420
9.4.6.3 Local time 421
9.4.6.4 PBM PTP 422
9.4.6.5 IRIG-B 426
9.4.7 Fault reports 427
9.4.8 Oscillography 429
9.4.8.1 Digital channels 431
9.4.8.2 Analog channels 431
9.4.9 Data logger 432
9.4.10 Demand 434
9.4.10.1 Thermal exponential calculation method 434
9.4.10.2 Block Interval calculation method 435
9.4.10.3 Rolling Demand calculation method 436
9.4.11 User-programmable LEDs 436
9.4.11.1 LED test 436
9.4.11.2 Trip and alarm LEDs 439
9.4.11.3 User-programmable LED <n> 439
9.4.11.4 Event cause LED <n> 440
9.4.12 User-programmable self-tests 441
9.4.13 Control pushbuttons 442
9.4.14 User-programmable pushbuttons 443
9.4.15 Flex state parameters 449
9.4.16 User-definable displays 449
9.4.16.1 User display <n> 450
9.4.17 Direct Inputs and Outputs 451
9.4.17.1 CRC Alarm 457
9.4.17.2 Unreturned messages alarm 458
9.4.18 Teleprotection 459
9.4.19 Installation 460
9.5 System setup 461
9.5.1 AC inputs 461
9.5.1.1 Current banks 461
9.5.1.2 Voltage banks 462
9.5.2 Power system 463
9.5.3 Signal sources 465
9.5.3.1 User selection of AC parameters for comparator elements 466
9.5.3.2 AC input actual values 466
9.5.3.3 Disturbance detectors (internal) 466
9.5.3.4 Example for use of sources 467
9.5.3.5 Source switching 468
9.5.4 Breakers 470
9.5.4.1 Control authority 477
9.5.4.2 Dual breaker control logic 478
9.5.5 Disconnect switch control 482
9.5.5.1 Disconnect switch control logic 489
9.5.6 FlexCurves 493
9.5.6.1 FlexCurve configuration with EnerVista software 494

9.5.6.2 Recloser curve editing 495
9.5.6.3 Standard recloser curves 496
9.5.7 PMU instance settings 500
9.5.7.1 Basic configuration 501
9.5.7.2 PMU calibration 506
9.5.7.3 PMU triggering overview 508
9.5.7.4 PMU recording 515
9.6 FlexLogic settings 517
9.6.1 FlexLogic equation editor 517
9.6.2 FlexLogic timers 517
9.6.3 FlexElements 518
9.6.3.1 FlexElement base units 522
9.6.4 Non-volatile latches 525
9.7 Grouped elements 527
9.7.1 Setting Group 1 527
9.7.2 Line pickup 527
9.7.3 Distance 530
9.7.3.1 Distance Menu 530
9.7.3.2 Phase Distance 533
9.7.3.3 Ground Distance 544
9.7.3.4 Ground Directional Supervision 553
9.7.4 Power swing detect (ANSI 68) 554
9.7.5 Load encroachment 564
9.7.6 Phase current 565
9.7.6.1 Inverse TOC curve characteristics 566
9.7.6.2 Phase time overcurrent (ANSI 51P, IEC PTOC) 572
9.7.6.3 Phase instantaneous overcurrent (ANSI 50P, IEC PIOC) 574
9.7.6.4 Phase directional overcurrent (ANSI 67P, IEC PDOC/PTOC) 576
9.7.7 Neutral Current 579
9.7.7.1 Neutral time overcurrent (ANSI 51N, IEC PTOC) 580
9.7.7.2 Neutral instantaneous overcurrent (ANSI 50N, IEC PIOC) 581
9.7.7.3 Neutral directional overcurrent (ANSI 67N, IEC PDEF/PTOC) 583
9.7.7.4 Transient ground fault detection 588
9.7.8 Wattmetric ground fault 593
9.7.8.1 Wattmetric zero-sequence directional (ANSI 32N, IEC PSDE) 593
9.7.9 Ground Current 597
9.7.9.1 Ground time overcurrent (ANSI 51G, IEC PTOC) 597
9.7.9.2 Ground instantaneous overcurrent (ANSI 50G, IEC PIOC) 599
9.7.10 Negative sequence current 600
9.7.10.1 Negative sequence time overcurrent (ANSI 51Q, IEC PTOC) 601
9.7.10.2 Negative sequence instantaneous overcurrent (ANSI 50Q, IEC PIOC) 602
9.7.10.3 Negative sequence directional overcurrent (ANSI 67Q, IEC PDEF/PTOC) 603
9.7.11 Breaker failure (ANSI 50BF) 607
9.7.11.1 Stage 1: Initiation 609
9.7.11.2 Stage 2: Determination of a breaker failure condition 610
9.7.11.3 Stage 3: Output 610
9.7.11.4 Main path sequence 611
9.7.11.5 BF Settings 611
9.7.11.6 BF logic 615
9.7.12 Stub bus 618
9.7.13 Voltage elements 621
9.7.13.1 Voltage elements menu 621
9.7.13.2 Undervoltage inverse time curves 622
9.7.13.3 Overvoltage inverse time curves 623
9.7.13.4 Phase undervoltage (ANSI 27P, IEC PTUV) 623
9.7.13.5 Phase overvoltage (ANSI 59P, IEC PTOV) 625
9.7.13.6 Neutral overvoltage (ANSI 59N, IEC PTOV) 627
9.7.13.7 Negative-sequence overvoltage (ANSI 59Q, IEC PTOV) 628

9.7.13.8	Auxiliary undervoltage (ANSI 27X, IEC PTUV)	629
9.7.13.9	Auxiliary overvoltage (ANSI 59X, IEC PTOV)	631
9.7.13.10	Compensated overvoltage (ANSI 59C, IEC PTOV)	633
9.7.14	Power	635
9.7.14.1	Sensitive directional power (ANSI 32)	635
9.8	**Control elements**	**639**
9.8.1	Trip Bus	639
9.8.2	Setting groups	641
9.8.3	Selector Switch	643
9.8.4	Trip Output	650
9.8.4.1	Cross Country	656
9.8.4.2	Common Zone Timer	658
9.8.5	Underfrequency (ANSI 81U)	660
9.8.6	Overfrequency (ANSI 81O)	662
9.8.7	Frequency rate of change (ANSI 81R)	663
9.8.8	Synchrocheck (ANSI 25)	665
9.8.8.1	Notes on the synchrocheck function	669
9.8.9	Autoreclose (ANSI 79)	671
9.8.10	Digital elements	685
9.8.11	Digital counters	688
9.8.12	Pilot schemes	691
9.8.12.1	Direct under-reaching transfer trip (DUTT)	691
9.8.12.2	Permissive under-reaching transfer trip (PUTT)	693
9.8.12.3	Permissive over-reaching transfer trip (POTT)	695
9.8.12.4	Permissive over-reaching transfer trip (POTT1)	698
9.8.12.5	Hybrid permissive over-reaching transfer trip	700
9.8.12.6	Directional comparison blocking	705
9.8.12.7	Directional comparison blocking 1	709
9.8.12.8	Directional comparison unblocking	711
9.9	**Monitoring elements**	**718**
9.9.1	Monitoring elements menu	718
9.9.2	Breaker arcing current	718
9.9.3	Breaker flashover	721
9.9.4	Breaker restrike	726
9.9.5	CT failure detector	729
9.9.6	Incipient fault detector	731
9.9.7	VT fuse failure	734
9.9.8	Open pole detector	736
9.9.9	Thermal overload protection (ANSI 49)	739
9.9.10	Broken conductor detection	742
9.9.11	Harmonic detection	745
9.10	**Inputs/outputs**	**750**
9.10.1	Contact inputs	750
9.10.2	Virtual inputs	752
9.10.3	Contact outputs	753
9.10.3.1	Non-latching contact outputs (H)	753
9.10.3.2	Latching contact outputs	755
9.10.4	Virtual outputs	758
9.10.5	Resetting	758
9.10.6	Direct inputs and outputs	759
9.10.6.1	Direct inputs	759
9.10.6.2	Direct outputs	760
9.10.6.3	Application examples	761
9.10.7	Teleprotection	764
9.10.7.1	Teleprotection inputs	764
9.10.7.2	Teleprotection outputs	765
9.10.7.3	Teleprotection input/output processing	765

9.11 Transducer inputs/outputs 767
9.11.1 DCmA inputs 767
9.11.2 DCmA outputs 768
9.11.3 DCmA application examples 770
9.11.4 RTD inputs 771
9.12 Testing 774
9.12.1 IED mode config 774
9.12.2 IED mode process 776
9.12.3 Force contact inputs 778
9.12.4 Force contact outputs 779
9.12.5 Phasor Measurement Unit test values 779
9.13 Simulation 782
9.13.1 Subscribe to simulated values 782
9.13.2 Publish simulated values 784
9.14 Process Bus Settings 786
9.15 SV stream settings 792

Chapter 10 Actual Values 802

10.1 Chapter Overview 803
10.2 Actual Values Menu 804
10.3 Front panel 805
10.4 Status 807
10.4.1 IED 807
10.4.2 Contact inputs 807
10.4.3 Virtual inputs 807
10.4.4 RxGOOSE boolean inputs 807
10.4.5 RxGOOSE DPS inputs 808
10.4.6 Teleprotection inputs 808
10.4.7 Contact Outputs 808
10.4.8 Virtual outputs 808
10.4.9 RxGOOSE status 808
10.4.10 RxGOOSE statistics 809
10.4.11 Fixed GOOSE 809
10.4.12 Digital counters 810
10.4.13 Breaker status 811
10.4.14 Selector switches 811
10.4.15 Flex states 812
10.4.16 Ethernet 812
10.4.17 Real time clock synchronizing 812
10.4.18 Direct inputs 814
10.4.19 Direct devices status 815
10.4.20 Teleprotection channel tests 815
10.4.21 Remaining connection status 816
10.4.22 Parallel Redundancy Protocol (PRP) 817
10.4.23 TxGOOSE status 818
10.4.24 Protocol 818
10.5 Metering 820
10.5.1 Metering conventions 820
10.5.2 Sources 823
10.5.2.1 Phase current metering 823
10.5.2.2 Ground current metering 824
10.5.2.3 Phase voltage metering 824
10.5.2.4 Auxiliary voltage metering 825
10.5.2.5 Power metering 825
10.5.2.6 Energy metering 827
10.5.2.7 Demand metering 827

10.5.2.8 Frequency metering 828
10.5.2.9 Current harmonics and THD metering 829
10.5.2.10 Voltage harmonics and THD metering 829
10.5.3 Synchrocheck 830
10.5.4 Tracking frequency 831
10.5.5 FlexElements 832
10.5.6 RxGOOSE analogs 834
10.5.7 Sensitive directional power 834
10.5.8 Wattmetric ground fault 835
10.5.9 Phasor Measurement Unit 835
10.5.10 PMU aggregator 836
10.5.11 Transducer inputs and outputs 836
10.5.12 Distance 837
10.5.13 Harmonic detection 839
10.5.14 Station Battery Voltage 839
10.5.15 Multi-range signal oscillation detector (MSOD) 839
10.6 Remote resources 841
10.7 Process Bus Module 842
10.7.1 General status 842
10.7.2 RxSV status 842
10.7.3 Clock synchronizing 844
10.7.4 PRP 846
10.7.5 HSR 848
10.8 Records 849
10.8.1 Fault reports 849
10.8.2 Event records 850
10.8.2.1 Enhanced and basic front panels 850
10.8.2.2 Graphical front panel 851
10.8.3 Oscillography 852
10.8.4 Data logger 853
10.8.5 Phasor Measurement Unit 853
10.8.6 Breaker maintenance 854
10.9 Product information 856
10.9.1 Model information 856
10.9.2 Firmware revisions 857

Chapter 11 Commands and targets 859

11.1 Chapter Overview 860
11.2 Commands menu 861
11.2.1 Virtual inputs 861
11.2.2 Clear records 861
11.2.3 Set date and time 862
11.2.4 Relay maintenance 863
11.2.5 Phasor Measurement Unit one-shot 865
11.2.6 Security 867
11.3 Targets menu 868
11.3.1 Target messages 868
11.3.2 Relay self-tests 868
11.3.3 Major self-test error messages 869
11.3.4 Minor self-test error messages 869
11.3.5 Instantaneous protection elements trip security 872
11.3.6 HardFiber major self-test error messages 872
11.3.7 HardFiber minor self-test error messages 873

Chapter 12 Application of settings 874

12.1 Chapter Overview 875
12.2 Overview 876
12.3 Phase distance elements (stepped distance scheme) 877
12.4 Ground distance elements (stepped distance scheme) 879
12.5 Protection signaling schemes 882
12.5.1 Direct under-reaching transfer trip (DUTT) 882
12.5.2 Permissive under-reaching transfer trip (PUTT) 882
12.5.3 Permissive over-reaching transfer trip (POTT) 882
12.5.4 Hybrid POTT scheme (HYB-POTT) 884
12.5.5 Directional comparison blocking 884
12.5.6 Directional Comparison Unblocking 885
12.5.6.1 Normal operation 886
12.5.6.2 Loss-of-guard operation 886
12.5.6.3 Keying the carrier(s) under normal conditions 886
12.5.6.4 Keying of the carrier during echo conditions 886
12.6 Series compensated lines 888
12.6.1 Distance 888
12.6.2 Ground directional overcurrent 889
12.7 Phase distance through power transformers 891
12.7.1 Zone settings 892
12.7.2 Example 892

Chapter 13 Theory of Operation 894

13.1 Chapter Overview 895
13.2 Distance elements 896
13.2.1 Phasor estimation 896
13.2.2 Distance Characteristics Definitions 897
13.2.3 Directional mho characteristic 897
13.2.4 Non-directional mho characteristics 898
13.2.5 Mho reactance characteristic 898
13.2.6 Quadrilateral reactance characteristic 898
13.2.7 Reverse quadrilateral reactance characteristic 899
13.2.8 Directional characteristic 899
13.2.9 Right blinder characteristic 899
13.2.10 Left blinder characteristic 900
13.2.11 Fault-type characteristic 900
13.2.12 Zero-sequence directional characteristic 901
13.2.13 Overcurrent supervision 901
13.2.14 Fast distance algorithm 903
13.2.15 Memory polarization 903
13.2.16 Distance elements analysis 905
13.2.16.1 Assumptions 905
13.2.16.2 Mho phase A to ground element (before memory expires) 906
13.2.16.3 Mho phase A to ground element after memory expires) 906
13.2.16.4 Mho AB phaseElement 907
13.2.16.5 Quad phase A to ground element (before memory expires) 907
13.3 Cross-country faults 908
13.3.1 Cross-country fault protection for solidly grounded systems 908
13.3.2 Ground fault distance protection for isolated and compensated systems 908
13.3.2.1 Single-phase to ground faults 909
13.3.3 Cross-country faults on isolated or compensated systems 909
13.3.4 First ground fault detection 910
13.3.4.1 Neutral voltage criteria 910
13.3.4.2 Neutral current criteria 910
13.3.4.3 First ground fault detection logic 911
13.3.5 Second ground fault detection logic 912

13.3.6 Phase preference tripping logic 913
13.3.7 Zone starting logic 913
13.4 Phase distance applied to power transformers 915
13.4.1 Example 917
13.5 Ground directional overcurrent 920
13.6 Series-compensated lines 921
13.7 Single pole tripping 924
13.7.1 Single line to ground fault 925
13.7.2 SLG fault evolving into LLG 926
13.7.3 Phase selection 927
13.7.4 Communications channels for pilot-aided schemes 929
13.7.4.1 Single-bit channels 929
13.7.4.2 Two-bit channels 931
13.7.4.3 Four-bit channels 933
13.7.5 Permissive echo signaling 936
13.7.5.1 Permissive echo operands and transmit codes 937
13.7.6 Pilot scheme coordination 937
13.7.7 Cross-country fault example 938
13.8 Fault locator 940
13.8.1 Single-end fault locator 940
13.9 Subcycle distance algorithm 944

Chapter 14 Maintenance 945

14.1 Chapter Overview 946
14.2 Monitoring 947
14.2.1 Devices with Site Targets 947
14.2.2 Data with Modbus Analyzer 947
14.3 General maintenance 950
14.4 Files and Settings 951
14.4.1 Retrieve files 951
14.4.2 CyberSentry security event files 951
14.4.3 Convert device settings 952
14.4.4 Copy settings to other device 954
14.4.5 Export settings 954
14.4.6 Compare settings 955
14.4.7 Back up and restore settings 957
14.4.7.1 Back up settings 957
14.4.7.2 Restore settings 959
14.4.8 Upgrade software 962
14.4.9 Upgrade firmware 963
14.4.10 Uninstall and clear files and data 965
14.5 Replace module 967
14.6 Battery 970
14.6.1 Replace battery 970
14.6.2 Dispose of battery 971
14.7 Repairs 972
14.8 Storage and disposal 973

Chapter 15 Appendices 974

15.1 Abbreviations 975
15.2 FlexLogic Operands 984
15.3 FlexAnalog items 985
15.4 Version history 986

CHAPTER 1

INTRODUCTION

1.1 CHAPTER OVERVIEW

This chapter provides a general introduction to the instruction manual.

This chapter contains the following sections:

Chapter Overview 2

Foreword 3

Cautions, warnings and notes 5

For Further Assistance 8

1.2 FOREWORD

This technical manual provides a functional and technical description of the relay, as well as a comprehensive set of instructions for using it. The level at which this manual is written assumes that you are already familiar with protection engineering and have experience in this discipline. The description of principles and theory is limited to that which is necessary to understand the product. For further details on general protection engineering theory, we refer you to the publication, Protection and Automation Application Guide, which is available online.

We have attempted to make this manual as accurate, comprehensive and user-friendly as possible. However we cannot guarantee that it is free from errors. Nor can we state that it cannot be improved. We would therefore be very pleased to hear from you if you discover any errors, or have any suggestions for improvement. Our policy is to provide the information necessary to help you safely specify, engineer, install, commission, maintain, and eventually dispose of this product. We consider that this manual provides the necessary information, but if you believe that more details are needed, please contact us.

1.2.1 TARGET AUDIENCE

This manual is aimed towards all professionals charged with installing, commissioning, maintaining, troubleshooting, or operating any of the products within the specified product range. This includes installation and commissioning personnel as well as engineers who will be responsible for operating the product.

The level at which this manual is written assumes that installation and commissioning engineers have knowledge of handling electronic equipment. Also that system and protection engineers have a thorough knowledge of protection systems and associated equipment.

1.2.2 TYPOGRAPHICAL CONVENTIONS

The following typographical conventions are used throughout this manual.

- Description of software menu items, buttons, labels or hardware keys and buttons written in bold type and colored in Vernova dark green.
  For example: Select **Save** from the file menu
- The names for special keys, appear in in upper case bold type and colored in Vernova dark green.
  For example: **ENTER**
- Filenames, paths, code, and text that appears on a command line interface use the courier font
  For example: `Example\File.text`
- Special terminology is written with leading capitals
  For example: Line Differential Relay
- If reference is made to the relay's internal settings database, the menu items are written in bold italics
  For example: ***SECURITY***
- Menu paths are shown with **>** separators. This applies to both software menu paths and relay menu paths
  For example: ***SETTINGS > SYSTEM SETUP > AC INPUTS*** (for relay path), or **File > Save** (for software path)
- Setting values are written with the courier font and are italicized
  For example: *`Enabled`*
- The products, use FlexLogic operands. FlexLogic operands are written in dark Vernova green uppercase courier font
  For example: PUSHBUTTON 1 ON
- Sometimes it is beneficial to emphasize some words. Depending on the case in question, this may be done with bold, italic or upper case font attributes.
- Notes are written in italic in, and are surrounded by a border.
  For example:

Note:
This is a note

1.2.3 NOMENCLATURE

Due to the technical nature of this manual, many special terms, abbreviations and acronyms are used throughout the manual. Some of these terms are well-known industry-specific terms while others may be special product-specific terms used by GE Vernova. The first instance of any acronym or term used in a particular section is explained.

We would like to highlight the following variations of nomenclature however:

- The word *relay* and *IED* (Intelligent Electronic Device) are both used to describe the protection device. The term *IED* is associated with the IEC61850 standard, whereas the term *relay* is the long-used traditional term. It may also be referred to simply as the *device* or the *product*.
- American English and spelling is used throughout this manual.
- The term 'Earth' and American term 'Ground' are equivalent. You may find either used in the manual.
- When depicting a generic instance of a number of items, this manual uses either 'x', the # symbol or <n> where n can be any integer.

1.3 CAUTIONS, WARNINGS AND NOTES

Before attempting to install or use the device, review all safety indicators in this document to help prevent injury, equipment damage, or downtime.

1.3.1 GENERAL CAUTIONS AND WARNINGS

The following general safety precautions and warnings apply.

Caution:
Before attempting to use the equipment, it is important that all danger and caution indicators are reviewed.
If the equipment is used in a manner not specified by the manufacturer or functions abnormally, proceed with caution. Otherwise, the protection provided by the equipment may be impaired and can result in impaired operation and injury.

Warning:
Hazardous voltages can cause shock, burns or death.

Caution:
Installation/service personnel must be familiar with general device test practices, electrical awareness and safety precautions must be followed.
Before performing visual inspections, tests, or periodic maintenance on this device or associated circuits, isolate or disconnect all hazardous live circuits and sources of electric power.

Warning:
Failure to shut equipment off prior to removing the power connections could expose you to dangerous voltages causing injury or death.
Ensure that all connections to the product are correct so as to avoid accidental risk of shock and/or fire, for example from high voltage connected to low voltage terminals.

Caution:
Follow the requirements of this manual, including adequate wiring size and type, terminal torque settings, voltage, current magnitudes applied, and adequate isolation/clearance in external wiring from high to low voltage circuits.
Use the device only for its intended purpose and application.
Ensure that all ground paths are un-compromised for safety purposes during device operation and service.
All recommended equipment that should be grounded and must have a reliable and un-compromised grounding path for safety purposes, protection against electromagnetic interference and proper device operation.
Equipment grounds should be bonded together and connected to the facility's main ground system for primary power.
Keep all ground leads as short as possible.
In addition to the safety precautions mentioned all electrical connections made must respect the applicable local jurisdiction electrical code.
It is recommended that a field external switch, circuit breaker be connected near the equipment as a means of power disconnect. The external switch or circuit breaker is selected in accordance with the power rating.
This product itself is not Personal Protective Equipment (PPE). However, it can be used in the computation of site specific Arc Flash analysis when the arc flash option is ordered. If a new appropriate Hazard Reduction Category code for the installation is determined, user should follow the cautions mentioned in the arc flash installation section.
The critical failure relay must be connected to annunciate the status of the device for ALL applications. This is particularly important for when the Arc Flash option is ordered.
Ensure that the control power applied to the device, the AC current, and voltage input match the ratings specified on the relay nameplate. Do not apply current or voltage in excess of the specified limits.
Only qualified personnel are to operate the device. Such personnel must be thoroughly familiar with all safety cautions and warnings in this manual and with applicable country, regional, utility, and plant safety regulations.

Warning:
Hazardous voltages can exist in the power supply and at the device connection to current transformers, voltage transformers, control, and test circuit terminals. Make sure all sources of such voltages are isolated prior to attempting work on the device.
Hazardous voltages can exist when opening the secondary circuits of live current transformers. Make sure that current transformer secondary circuits are shorted out before making or removing any connection to the current transformer (CT) input terminals of the device.

Caution:
For tests with secondary test equipment, ensure that no other sources of voltages or currents are connected to such equipment and that trip and close commands to the circuit breakers or other switching apparatus are isolated, unless this is required by the test procedure and is specified by appropriate utility/plant procedure.
When the device is used to control primary equipment, such as circuit breakers, isolators, and other switching apparatus, all control circuits from the device to the primary equipment must be isolated while personnel are working on or around this primary equipment to prevent any inadvertent command from this device.
Use an external disconnect to isolate the mains voltage supply.

Warning:
LED transmitters are classified as IEC 60825-1 Accessible Emission Limit (AEL) Class 1M. Class 1M devices are considered safe to the unaided eye. Do not view directly with optical instruments.

Note:
To ensure the settings file inside the relay is updated, wait 30 seconds after a setpoint change before cycling power. This product is rated to Class A emissions levels and is to be used in Utility, Substation Industrial environments. Not to be used near electronic devices rated for Class B levels.

1.4 FOR FURTHER ASSISTANCE

For product support, contact us as follows:

GE Vernova

650 Markland Street

Markham, Ontario

Canada L6C 0M1

Worldwide telephone: +1 905 927 7070

Europe/Middle East/Africa telephone: +34 94 485 88 54

North America toll-free: 1 800 547 8629

Fax: +1 905 927 5098

Worldwide e-mail: ga.support@gevernova.com

Website: https://www.gevernova.com

1.4.1 REPAIRS

The firmware and software can be upgraded without return of the device to the factory.

For issues not solved by troubleshooting, the process to return the device to the factory for repair is as follows:

- Contact a GE Vernova Grid Solutions Technical Support Center. Contact information is found in the first chapter.
- Obtain a Return Materials Authorization (RMA) number from the Technical Support Center.
- Verify that the RMA and Commercial Invoice received have the correct information.
- Tightly pack the unit in a box with bubble wrap, foam material, or styrofoam inserts or packaging peanuts to cushion the item(s). You may also use double boxing whereby you place the box in a larger box that contains at least 5 cm of cushioning material.
- Ship the unit by courier or freight forwarder, along with the Commercial Invoice and RMA, to the factory.
- Customers are responsible for shipping costs to the factory, regardless of whether the unit is under warranty.
- Fax a copy of the shipping information to the GE Vernova Grid Solutions service department.

Use the detailed return procedure outlined at

https://www.gevernova.com/grid-solutions/return-procedures

The current warranty and return information are outlined at

https://www.gevernova.com/grid-solutions/multilin/warranty

CHAPTER 2

PRODUCT DESCRIPTION

2.1 CHAPTER OVERVIEW

This chapter contains the following sections:

Chapter Overview 10
Product Overview 11
Signal processing 16
Communication Functions 18
Order codes 19

2.2 PRODUCT OVERVIEW

The D60 is part of the Universal Relay (UR) family of products. It is a microprocessor-based relay for use on transmission lines of any voltage level, without, with, and in the vicinity of series compensation, in three-pole and single-pole tripping applications. The primary function of the relay consists of five phase and six ground distance zones of protection, either mho or quadrilateral as per user selection, with built-in logic for the five common pilot-aided schemes. The distance elements are optimized to provide good measurement accuracy with fast operating time, even when used with capacitive voltage transformers (CVTs), and can be supervised by detection of power swings. The relay also provides directional ground overcurrent elements, which are commonly used as part of an overall line protection system.

Product phase distance zones can be configured to work with voltages and currents fed from VTs and CTs located independently from one another on either side of a three-phase power transformer. The relay compensates accordingly to preserve reach and correct target information regardless of the location and type of fault. This feature allows backup protection applications for generators and power transformers.

A close-into-fault (or switch-on-to-fault) function is performed by the line pickup element. Out-of-step tripping, three-pole/single-pole dual-breaker autoreclosing, synchrocheck, fault location, and many other functions are also available. In addition, overcurrent and undervoltage protection, fault diagnostics, power metering, and remote terminal unit (RTU) functions are provided. The Product provides phase, neutral, and ground time overcurrent protection. The time overcurrent functions can be programmed with multiple curve shapes or FlexCurve for optimum coordination.

Voltage and current metering are built into the relay as standard features. Parameters are available as total waveform root mean square (RMS) magnitude, or as fundamental frequency only RMS magnitude and angle (phasor).

Diagnostic features include:

- An event recorder capable of storing 1024 time-tagged events
- Oscillography capable of storing up to 64 records with programmable trigger, content, and sampling rate
- The internal clock used for time-tagging can be synchronized with an IRIG-B signal, using the Simple Network Time Protocol (SNTP) over the Ethernet port, or using the Precision Time Protocol (PTP). This precise time stamping allows the sequence of events to be determined throughout the system.
- Events can also be programmed (via FlexLogic equations) to trigger oscillography data capture that can be set to record the measured parameters before and after the event for viewing on a computer.

These tools significantly reduce troubleshooting time and simplify report generation in the event of a system fault.

Several options are available for communication.

- An RS232 port (or a USB port with the graphical front panel) is provided for connection with a PC to program settings and monitor actual values.
- All serial ports support the Modbus RTU protocol.
- A rear RS485 port allows independent access by operators and engineering staff. It can be connected to system computers with baud rates up to 115.2 kbps.
- The RS485 interface also supports DNP, IEC 60870-5-103 and IEC 60870-5-104, whereby only one of these can be enabled at any time. When the IEC 60870-5-103 protocol is chosen, the RS485 port has a fixed even parity and the baud rate can be either 9.6 kbps or 19.2 kbps.
- The 100Base-FX or 100Base-TX Ethernet interface provides fast, reliable communications in noisy environments.
- The Ethernet port supports IEC 61850, Modbus/TCP, TFTP, and PTP (according to IEEE Std. 1588-2008 or IEC 61588), and it allows access to the relay via any standard web browser.
- The Ethernet port supports the IEC 60870-5-104 protocol

- The Ethernet port supports the Parallel Redundancy Protocol (PRP) of IEC 62439-3 (clause 4, 2012) when purchased as an option.
- GOOSE and secure Routable GOOSE (R-GOOSE) are supported with software options.
- Process Bus GOOSE is supported with a hardware module and software options for applicable relays

Settings and actual values can be accessed from the front panel or EnerVista software.

The Product uses flash memory technology that allows field upgrading of both firmware and software as new features are added.

With a Process Bus Module that supports IEC 61850-9-2LE and IEC 61869, PRP is supported on two Ethernet ports to IEC 62439, and High-availability Seamless Redundancy (HSR) is supported on four Ethernet ports for dual HSR ring architecture.

The relay supports the following ANSI functions (American National Standards Institute)

ANSI codes

ANSI code	Function	ANSI code	Function
21G	Ground distance	51_2	Negative-sequence time overcurrent
21P	Phase distance	52	AC circuit breaker
25	Synchrocheck	59N	Neutral overvoltage
27P	Phase undervoltage	59C	Compensated overvoltage
27X	Auxiliary undervoltage	59N	Neutral overvoltage
32N	Wattmetric zero-sequence directional	59P	Phase overvoltage
49	Thermal overload protection	59X	Auxiliary overvoltage
50BF	Breaker failure	59_2	Negative Sequence Overvoltage
50DD	Adaptive fault detector (sensitive current disturbance detector)	67N	Neutral directional overcurrent
50G	Ground instantaneous overcurrent	67P	Phase Directional Overcurrent
50N	Neutral Instantaneous Overcurrent	67_2	Negative-sequence directional overcurrent
50P	Phase instantaneous overcurrent	68	Power Swing Blocking
50_2	Negative-sequence instantaneous overcurrent	78	Out-of-step tripping
51G	Ground time overcurrent	79	Autoreclose
51N	Neutral time overcurrent	81R	Rate of change of frequency
51P	Phase time overcurrent	81U/O	Under/overfrequency

The following single-line diagram illustrates the relay functionality using American National Standards Institute (ANSI) device numbers.

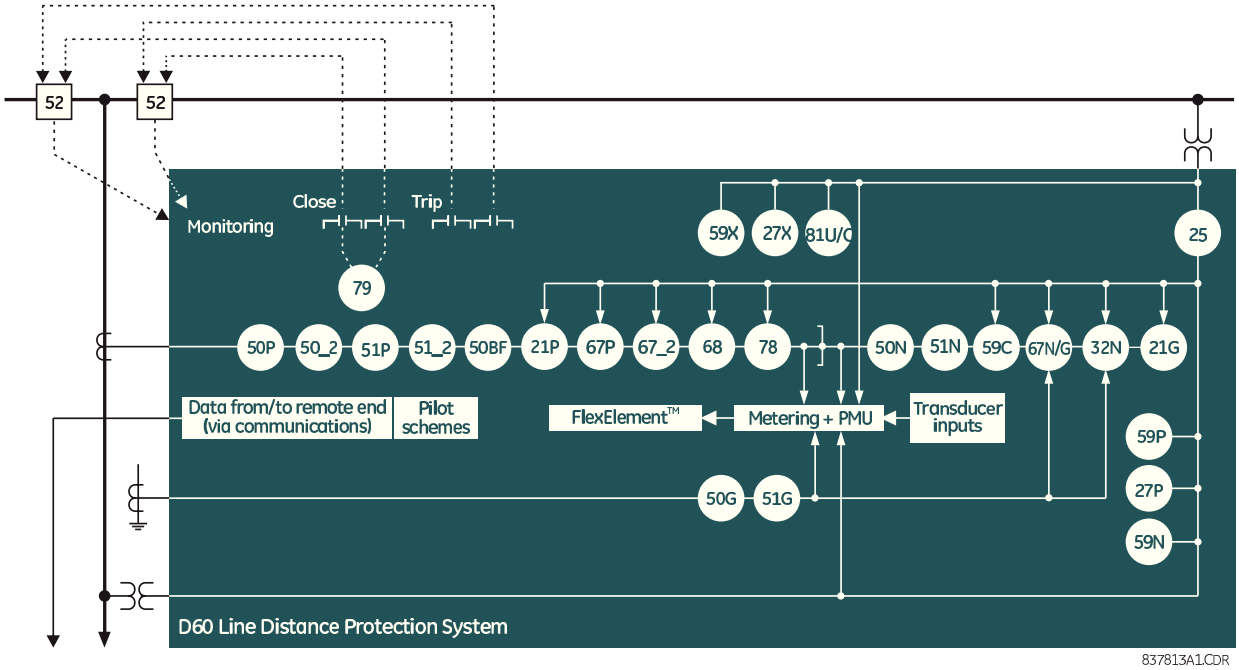

Figure 1: Single line diagram

Other device functions

Function	Function
Breaker Arcing Current (I^2t)	IEC 62351-9 Data and Communications Security
Breaker Control	Incipient cable fault detection
Broken conductor detection	Line pickup
Contact Inputs (up to 120)	Metering: Current, Voltage, Power, Energy, Frequency
Contact Outputs (up to 72)	Modbus Communications
Control Pushbuttons	Modbus User Map
CT failure detector	Non-Volatile Latches
CyberSentry Security	Non-Volatile Selector Switch
Data Logger	Oscillography
Digital Counters (8)	Setting Groups (6)
Digital Elements (96)	Time Synchronization over IRIG-B or IEEE 1588
Direct Inputs/Outputs (32)	Time Synchronization over SNTP
Disconnect Switches	Transducer Inputs/Outputs
DNP 3.0 or IEC 60870-5-104 Communications	Trip Bus
Event Recorder	User-definable Displays

Function	Function
Fault Detector and Fault Report	User-programmable LEDs
Fault locator	User-definable pushbuttons
FlexElements (16)	User-programmable Self-Tests
FlexLogic Equations	Virtual Inputs (128)
IEC 60870-5-103 Communications	Virtual Outputs (256)
IEC 61850 Communications	VT Fuse Failure

Number of elements per feature

Feature	No.	Feature	No.
CT Banks	2	Modbus User Map	1
VT Banks	2	Multirange Signal Oscillation Detection (MSOD)	2
# of DSPs	2	Negative Sequence Directional OC	2
Autoreclose 1P 3P	1	Negative Sequence Instantaneous Overcurrent	2
Auxiliary Overvoltage	3	Negative Sequence Overvoltage	3
Auxiliary Undervoltage	3	Negative Sequence Time Overcurrent	2
Basic UR relay features	1	Neutral Directional OC	2
Breaker Arcing Current (I2t)	2	Neutral Overvoltage	3
Breaker Control	4	Neutral Instantaneous Overcurrent	12
Breaker switch	16	Neutral Time Overcurrent	6
Breaker Failure	4	Non Volatile Latches	16
Breaker Flashover	2	Oscillography	1
Breaker Restrike	2	Overfrequency	4
Broken Conductor Detection	2	Phase Directional	2
Compensated Overvoltage	1	Phase Distance	6
Contact Inputs	120	Phase Instantaneous Overcurrent	12
Contact Outputs	72	Phase Overvoltage	3
Cross-Country (Solid ground Peterson Coil)	1	Phase Time Overcurrent	6
CT Fail	4	Phase Undervoltage	3
Current CT settings	6	Pilot Schemes	1
Current Unbalance	1	Power Swing Detect	1
Demand	4	Precision Time Protocol(1588)	3
Digital Counters	8	Security	1
Digital Elements	96	Selector Switch	2
Platform Direct I/O	64	Sensitive Directional Power	2
Disturbance Detection	4	Setting Groups	6
Energy Metering	4	Simple Network Time Protocol	1
Event Recorder	1	Single Pole Tripping	1
Fault Location	1	Sources	4
Field Resources	1	Synchrocheck	10

Feature	No.
FlexElements	16
FlexLogic Equations	1
Frequency Rate of Change	4
Ground Distance	6
Ground Instantaneous Overcurrent	12
Ground Time Overcurrent	6
Harmonic Detection	4
IEC 61850 Communications	1
IEC 61850 Remote I/O (Fixed GOOSE/GSSE/GOOSE)	1
RxGOOSE	64
RxGOOSE BOOLEAN	256
RxGOOSE DPS	16
RxGOOSE I/O States	1
RxGOOSE Status	64
IEC103 Communications	1
Line Pickup	1
Load Encroachment	1
Modbus Communications	1

Feature	No.
Synchrophasors	1
Aggregators (max 4)	1
Teleprotection I/O	1
Thermal Overload Protection	2
Transducer I/O	1
DCMA inputs	24
Transient Ground Fault Detection (TGFD)	2
Trip Bus	6
Underfrequency	6
User Programmable LEDs	48
User Programmable Pushbuttons	48
Control PBs	3
User-definable displays	16
Virtual Inputs	128
Virtual Outputs	256
VT Fuse Failure	4
Wattmetric Ground Fault	2

2.3 SIGNAL PROCESSING

The relays are microprocessor-based protection devices that are designed to measure power system conditions directly via CT and VT inputs and via other sources of information, such as analog inputs, communications inputs, and contact inputs. The following figure shows the overall signal processing in URs.

An analog low pass anti-aliasing filter with a 3 dB corner frequency is set at 2.4 kHz and is used for current and voltage analog filtering as well as signal conditioning. The same filtering is applied for phase, ground currents, phase-to-phase (when applicable), and auxiliary voltages. The 2.4 kHz cut-off frequency applies to both 50 and 60 Hz applications and fixed in the hardware, and thus is not dependent on the system nominal frequency setting.

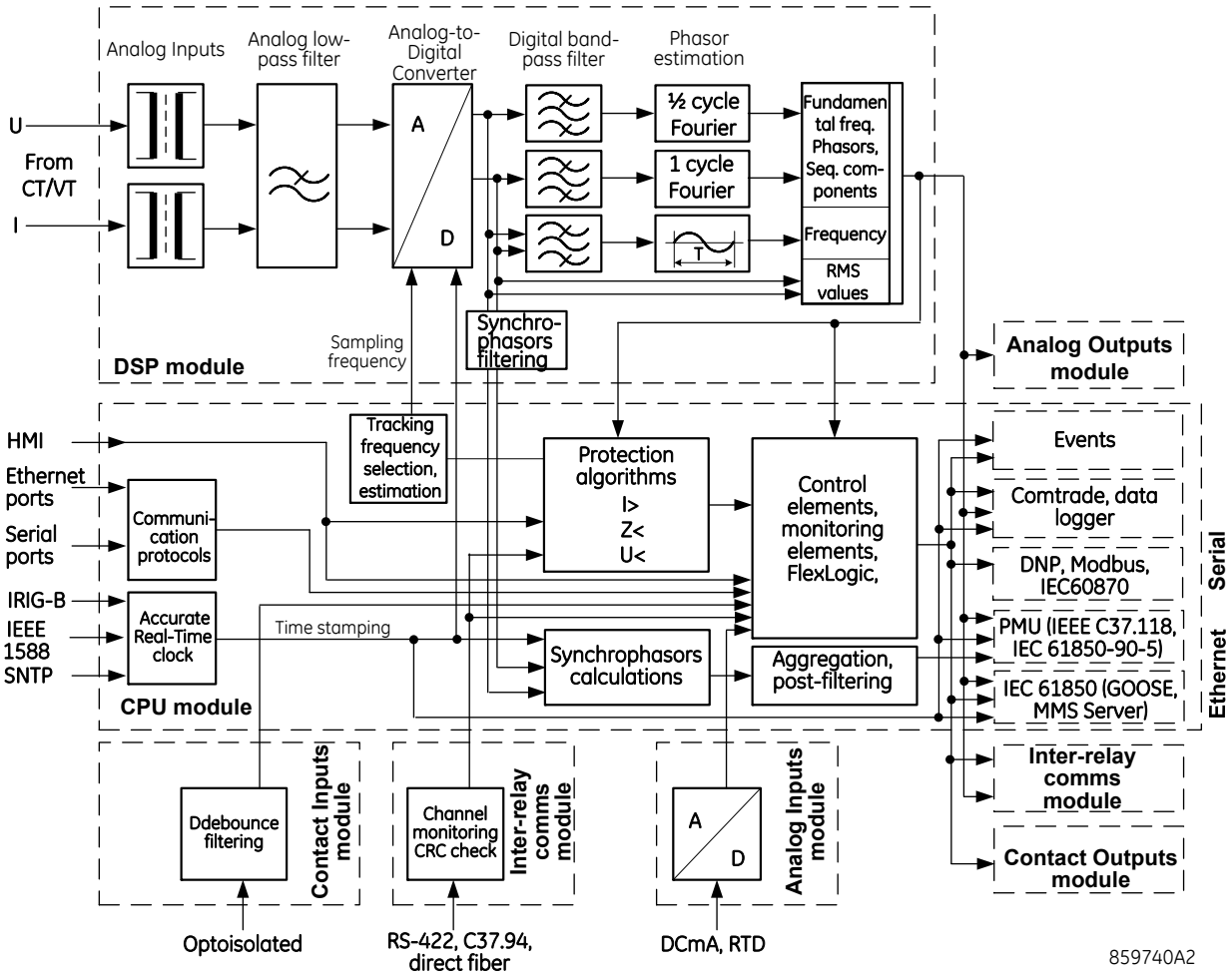

Figure 2: UR signal processing

The relay samples its AC signals at 64 samples per cycle, that is, at 3840 Hz in 60 Hz systems, and 3200 Hz in 50 Hz systems. The sampling rate is adjusted dynamically to the actual system frequency by an accurate and fast frequency tracking system.

The analog/digital converter has the following ranges of AC signals:

Voltages

$$\pm\sqrt{2}\cdot 260(\mathrm{V})$$

Currents

$$\pm\sqrt{2}\cdot 46\mathrm{rated}(\mathrm{A})$$

Current harmonics are estimated based on raw samples with the use of the full-cycle Fourier filter. Harmonics 2nd through 25th are estimated.

True RMS value for the current is calculated on a per-phase basis. The true RMS can be used for demand recording or as an input signal to Time Overcurrent function, if the latter is intended for thermal protection. The true RMS is calculated as per the widely accepted definition:

$$I_{RMS(t)} = \sqrt{\frac{1}{T} \int_{(t-T)}^{t} i^2(t)dt}$$

RMS values include harmonics, inter-harmonics, DC components, and so on, along with fundamental frequency values. The true RMS value reflects thermal effects of the current and is used for the thermal related monitoring and protection functions.

Protection and control functions respond to phasors of the fundamental and/or harmonic frequency components (magnitudes and angles), with an exception for some functions that have an option for RMS or fundamental measurements, or some function responding to RMS only. This type of response is explained typically in each element's section in this instruction manual.

Currents are pre-filtered using a Finite Impulse Response (FIR) digital filter. The filter is designed to reject DC components and low-frequency distortions, without amplifying high-frequency noise. This filter is referred to as a modified MIMIC filter, which provides excellent filtering and overall balance between speed and accuracy of filtering. The filter is cascaded with the full-cycle Fourier filter for the current phasor estimation.

Voltages are pre-filtered using a patented FIR digital filter. The filter has been optimized to reject voltage-transformer-specific distortions, such as Capacitive Voltage Transformer (CVT) noise and high-frequency oscillatory components. The filter is cascaded with the half-cycle Fourier filter for the voltage phasor estimation.

The URs measure power system frequency using the Clarke transformation by estimating the period of the waveform from two consecutive zero-crossings in the same direction (negative-to-positive). Voltage or current samples are pre-filtered using a Finite Impulse Response (FIR) digital filter to remove high frequency noise contained in the signal. The period is used after several security conditions are met, such as true RMS signal must be above 6% nominal for a certain time. If these security conditions are not met, the last valid measurement is used for a specific time after which the UR reverts to nominal system frequency.

Synchrophasors are calculated using a patented convolution integral algorithm. This algorithm allows use of the same time-stamped samples, which are used for protection and taken at the same sampling frequency. This allows URs to use one sampling clock for both protection algorithms and synchrophasors.

Synchrophasors on firmware versions 7.23 and up have been tested and certified to meet IEEE C37.118-2011 and C37.118.1a-2014 standards for both metering and protection classes with outputs available up to 60 synchrophasors per second for the metering class and 120 synchrophasors per second for the protection class. Synchrophasors measurement is also available via IEC 61850-90-5 protocol.

The contact inputs threshold is settable in the firmware with 17, 33, 84, and 166 V DC settings available. Inputs are scanned every 0.5 ms and can be conditioned for the critical applications, using debounce time timer, settable from 0.0 to 16.0 ms. Contact inputs with auto-burnishing are available as well, when external contacts are exposed to the contamination in a harsh industrial environment.

All measured values are available in the UR metering section on the front panel and via communications protocols. Measured analog values and binary signals can be captured in COMTRADE format with sampling rates from 8 to 64 samples per power cycle. Analog values can be captured with the Data Logger, allowing much slower rates extended over a long period of time.

Other advanced UR order code options are available to support IEC 61850 (including fast GOOSE, ICD/CID/IID files, and so on), IEEE 1588 (IEEE C37.238 power profile) based time synchronization, CyberSentry (advanced cyber security), the Parallel Redundancy Protocol (PRP), IEC 60870-5-103, and so on.

2.4 COMMUNICATION FUNCTIONS

The UR family supports an array of communication ports and protocols to allow connection to equipment such as personal computers, remote terminal units (RTUs), supervisory control and data acquisition (SCADA) masters, and programmable logic controllers. These communication features can be selected as options in the order codes.

Relay communication is a very extensive subject, requiring a significant amount of documentation. Because of this, we supply a separate Communications Guide, which is applicable to all models within the UR product family. The Communications Guide is a major part of the overall documentation of each product model.

Prior to this version, the product manuals themselves contained a large part of the communication documentation. With this version, much of the theoretical information has been moved from this product manual into the Communications Guide. Only communication information pertaining directly to front panel settings remains in this product manual. For further information, we refer you to the Communications Guide.

Due to the extensiveness of IEC61850 documentation, all IEC61850 information has been moved into the Communications Guide, including the settings.

2.5 ORDER CODES

The order code is on the product label and indicates the product options applicable.

The relay is available as a 19-inch rack horizontal mount or reduced-size (¾) vertical unit. It consists of the following modules:

- Power supply
- CPU
- CT/VTs
- Contact inputs and outputs
- Transducer inputs and outputs
- Inter-relay communications.

Module options are specified at the time of ordering.

The order codes shown here are subject to change without notice. See the web page for the product for the latest options.

The letters in the top row of the table correspond to slots in the UR chassis, for example slot F, H, or U.

The R-GOOSE protocol described in IEC 61850-8-1 is available through the IEC 61850 software option. R-GOOSE security requires the CyberSentry software option.

Note:
Process Bus GOOSE requires an IEC 61850-9-2LE / IEC 61869 Process Bus Module, as well as IEC 61850, PRP, and IEEE 1588 software options. This is not available for all UR models

For Japanese, the settings display in Japanese on the graphical front panel, while the keys printed on the panel are in English.

2.5.1 ORDER CODES FOR UR

The data items are kept in files attached to this PDF. Depending on the file type, the files may be opened using Microsoft Excel, or free web-based software such as Google Sheets, or PDF viewer capable of opening attachments, such as Adobe Acrobat Reader or Nitro PDF.

Please note that this manual must be opened with a PDF viewer capable of opening attachments, such as Adobe Acrobat Reader or Nitro PDF. Browsers like Microsoft Edge or Google Chrome do not support PDF attachments, although Firefox does. If using Nitro PDF, attachments are shown in the Attachment Pane. To show or hide the Attachments pane, look in the sidebar and click the Attachments tab.

An **Open File** dialog box may open with a warning message about potential harm from programs, macros or viruses. The files supplied do not contain any harmful content, and may be safely opened.

If using Adobe Acrobat Reader, click on the button below to open the spreadsheet. Some older versions of Adobe Acrobat Reader have a bug and do not support this button functionality. If the button does not work, upgrade your Adobe Acrobat Reader for free, to the latest version.

Order Code D60 88x

2.5.2 ORDER CODES FOR REPLACEMENT MODULES

Replacement modules can be ordered separately. When ordering a replacement CPU module or front panel, provide the serial number of your existing unit.

Not all replacement modules apply to the relay described in this manual.

The order codes shown here are subject to change without notice. See the web page for the product for the latest options.

Please note that this manual must be opened with Adobe Acrobat Reader to allow access to the attached spreadsheet. This program is freely available on the Adobe website. The spreadsheets may be opened using free web-based software such as Google Sheets.

An Open File dialogue box may open with a warning message about potential harm from programs, macros or viruses. The files supplied do not contain any harmful content, and may be safely opened.

Note:
Note: The SL and TL power supply options are only available as a special option. Please contact GE Vernova for more information

CHAPTER 3

SPECIFICATIONS

3.1 CHAPTER OVERVIEW

This chapter contains the following sections:

Chapter Overview	22
Protection elements	23
User-programmable elements	41
Monitoring	44
Metering	46
Power supply	48
Inputs	50
Outputs	53
Communication protocols	56
Inter-relay communications	58
CyberSentry security	60
Graphical front panel	61
Environmental	62
Type tests	63
Production tests	64
Approvals	65
Maintenance	66

3.2 PROTECTION ELEMENTS

The operating times include the activation time of a trip rated form-A output contact unless otherwise indicated. FlexLogic operands of a given element are 4 ms faster. Take this into account when using FlexLogic to interconnect with other protection or control elements of the relay, building FlexLogic equations, or interfacing with other intelligent electronic devices (IEDs) or power system devices via communications or different output contacts. If not specified, the operate times given here are for a 60 Hz system at nominal system frequency. Operate times for a 50 Hz system are 1.2 times longer. Timer Accuracy is specified as a percentage of the total operating time that is the sum of the Operate Time and settable Pickup Delay.

3.2.1 PHASE DISTANCE

PHASE DISTANCE	
Characteristic	mho (memory polarized or offset) or quad (memory polarized or non-directional), selectable individually per zone
Number of zones	5, or 6 with Distance Adaptation Package software option
Directionality	forward, reverse, or non-directional
Reach (secondary Ω)	0.02 to 500.00 Ω in steps of 0.01
Reach accuracy zone 1	±5% including the effect of CVT transients up to an SIR of 30 and ±7% for 30<SIR<60 at RCA angle
Reach accuracy zones 2 or higher	±5% for steady fault conditions
Distance comparator limit angle	30 to 90° in steps of 1
Directional supervision characteristic angle	30 to 90° in steps of 1
Directional supervision limit angle	30 to 90° in steps of 1
Right blinder (Quad only) reach	0.02 to 500 Ω in steps of 0.01
Right blinder (Quad only) characteristic angle	60 to 90° in steps of 1
left blinder (Quad only) reach	0.02 to 500 Ω in steps of 0.01
Left blinder (Quad only) characteristic angle	60 to 90° in steps of 1
Time delay	0.000 s to 65.535 s in steps of 0.001
Timer accuracy	±3% of operate time or ±1/4 cycle (whichever is greater)
Current supervision level	line-to-line current
Current supervision pickup	0.100 to 30.000 pu in steps of 0.001
Current supervision level droput	97 to 98%
Memory duration	5 to 25 cycles in steps of 1
VT location	all delta-wye and wye-delta transformers
CT location	all delta-wye and wye-delta transformers
Voltage supervision pickup (series compensation applications	0 to 5.000 pu in steps of 0.001

3.2.2 PHASE DISTANCE OPERATING TIME CURVES

The operating times are response times of a microprocessor part of the relay. See output contacts specifications for estimation of the total response time for a particular application. The operating times are average times including variables such as fault inception angle or type of a voltage source (magnetic VTs and CVTs).

PHASE DISTANCE OPERATING TIME CURVES	
zone 1 distance time curves for a 60 Hz system at nominal system frequency	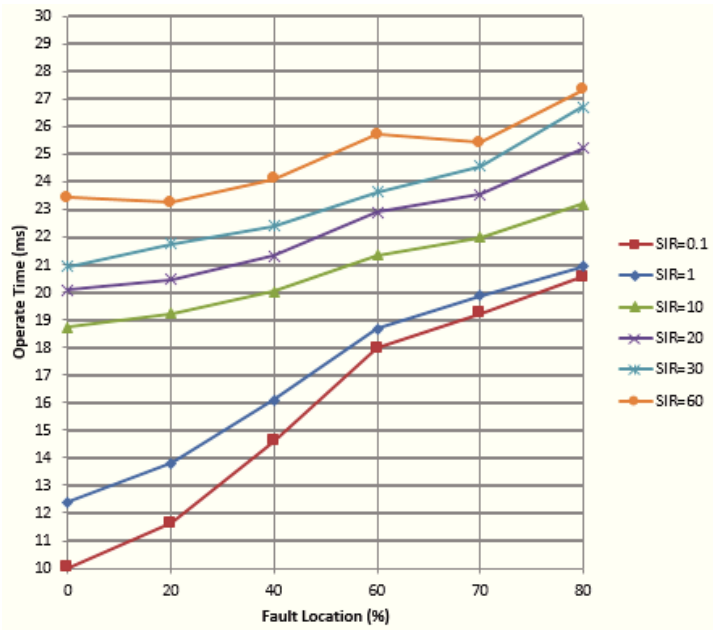
Phase distance operating time curves with subcycle distance enabled. Due to filtering of the sampled values of the IEC 61850-9-2LE / IEC 61869 Process Bus Module, subcycle distance operation may not be achieved at some fault inception angles	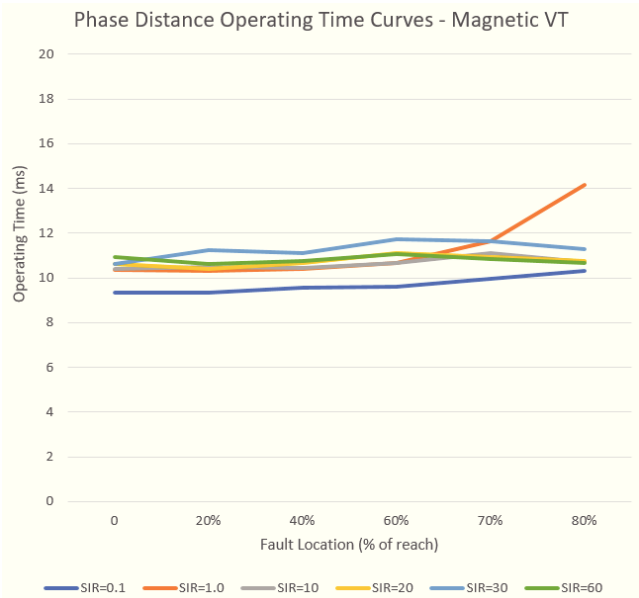

PHASE DISTANCE OPERATING TIME CURVES	
Phase distance operating time curves - passive CVT	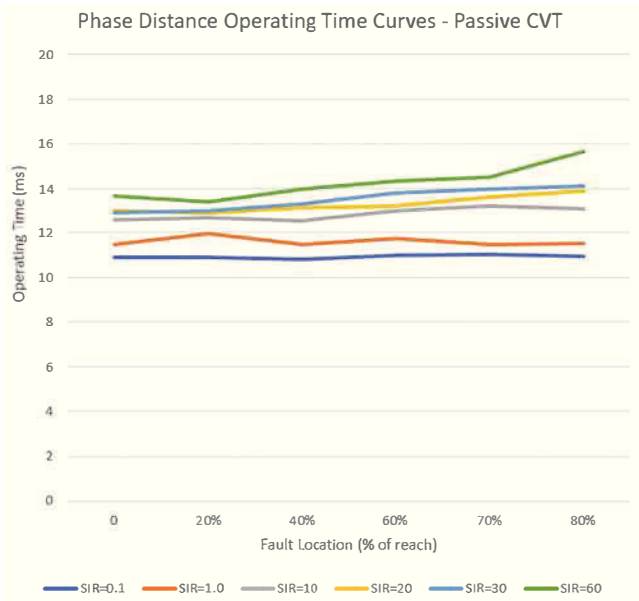
Phase distance operating time curves - active CVT	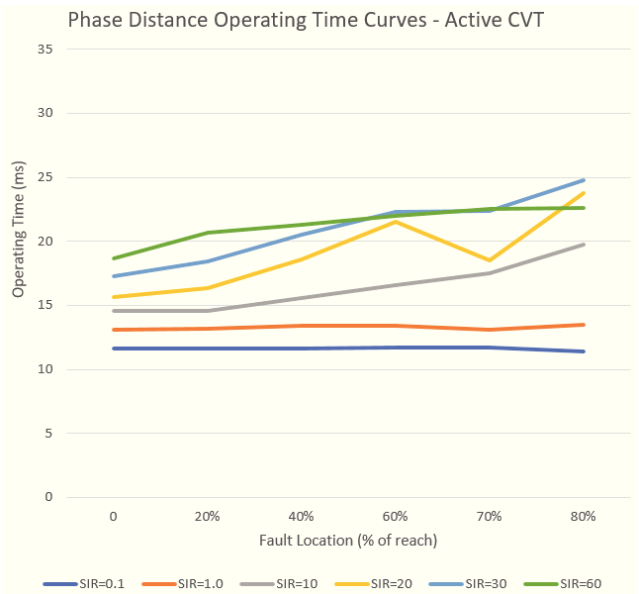

3.2.3 GROUND DISTANCE

GROUND DISTANCE	
Characteristic	mho (memory polarized or offset) or quad (memory polarized or non-directional)
Number of zones	5, or 6 with Distance Adaptation Package software option
Directionality	forward, reverse, or non-directional
Reach (secondary Ω)	0.02 to 500.00 Ω in steps of 0.01
Reach accuracy zone 1	±5% including the effect of CVT transients up to an SIR of 30 and ±7% for 30<SIR<60 at RCA angle
Reach accuracy zones 2 or more	±5% for steady fault conditions
Distance characteristic angle	30 to 90° in steps of 1
Distance comparator limit angle	30 to 90° in steps of 1

GROUND DISTANCE	
Directional supervision characteristic angle	30 to 90° in steps of 1
Directional supervision limit angle	30 to 90° in steps of 1
Right blinder (Quad only) reach	0.02 to 500 Ω in steps of 0.01
Right blinder (Quad only) characteristic angle	60 to 90° in steps of 1
left blinder (Quad only) reach	0.02 to 500 Ω in steps of 0.01
Left blinder (Quad only) characteristic angle	60 to 90° in steps of 1
Time delay	0.000 s to 65.535 s in steps of 0.001
Timer accuracy	±3% of operate time or ±1/4 cycle (whichever is greater)
Current supervision level	neutral current (3I_0)
Current supervision pickup	0.100 to 30.000 pu in steps of 0.001
Current supervision level dropout	97 to 98%
Memory duration	5 to 25 cycles in steps of 1
Voltage supervision pickup (series compensation applications	0 to 5.000 pu in steps of 0.001
Reactance polarization	negative-sequence or zero-sequence current
Non-homogeneity angle	–40 to 40° in steps of 1
Zero-sequence compensation Z0/Z1 magnitude	0.00 to 10.00 in steps of 0.01
Zero-sequence compensation Z0/Z1 angle	–90 to 90° in steps of 1
Zero-sequence mutual compensation Z0M/Z1 magnitude	0.00 to 7.00 in steps of 0.01
Zero-sequence mutual compensation Z0M/Z1 angle	–90 to 90° in steps of 1

3.2.4 GROUND DISTANCE OPERATING TIME CURVES

The operating times are response times of a microprocessor part of the relay. See output contacts specifications for estimation of the total response time for a particular application. The operating times are average times including variables such as fault inception angle or type of a voltage source (magnetic VTs and CVTs). The figure shows zone 1 ground distance time curves for a 60 Hz system at nominal system frequency.

GROUND DISTANCE OPERATING TIME CURVES	
Zone 1 ground distance time curves for a 60 Hz system at nominal system frequency	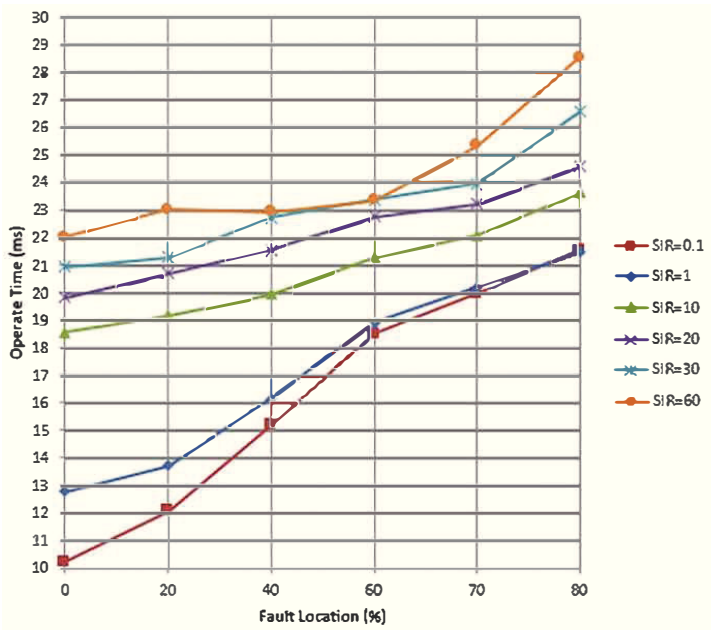
Ground distance operating time curves with subcycle distance enabled. Due to filtering of the sampled values of the IEC 61850-9-2LE / IEC 61869 Process Bus Module, subcycle distance operation may not be achieved at some fault inception angles	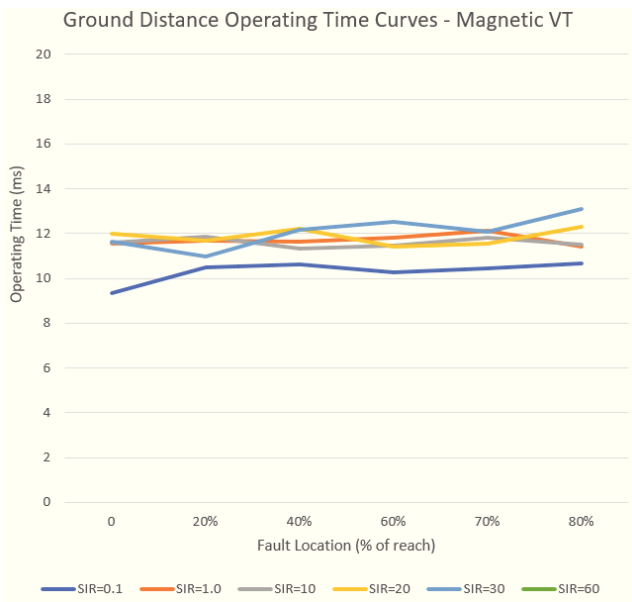

GROUND DISTANCE OPERATING TIME CURVES	
Ground distance operating time curves - passive CVT	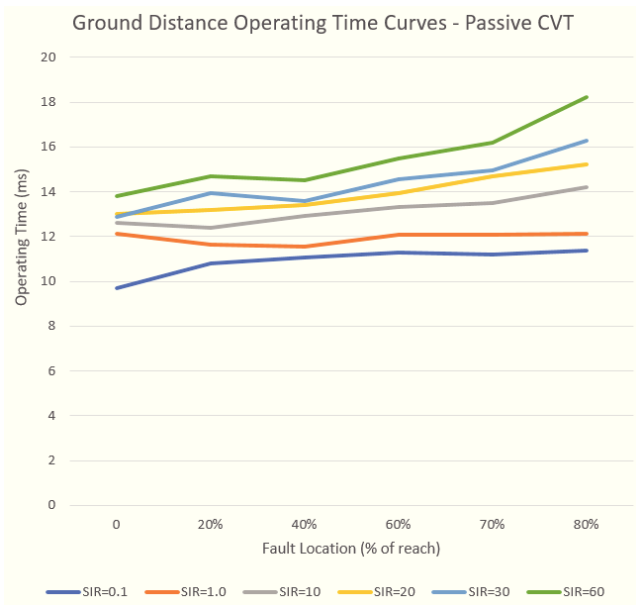
Ground distance operating time curves - active CVT	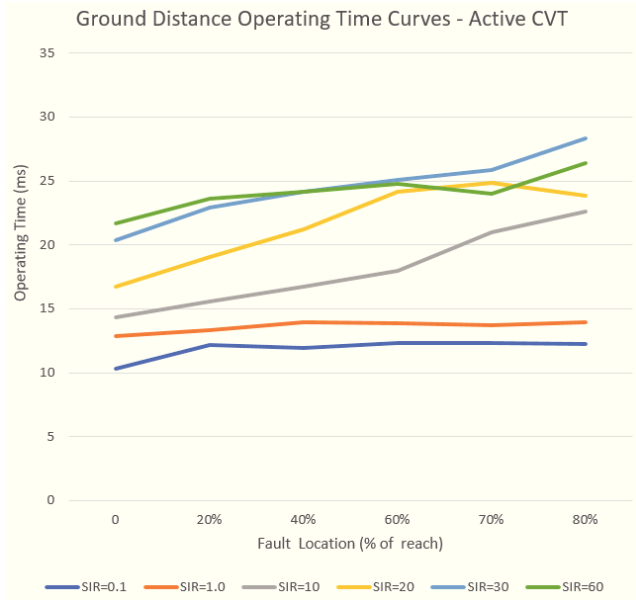

3.2.5 LINE PICKUP

LINE PICKUP	
Phase instantaneous overcurrent	0.020 to 30.000 pu
Undervoltage pickup:	0.004 to 3.000 pu
Overvoltage delay	0.000 to 65.535 s

3.2.6 PHASE/NEUTRAL/GROUND TIME OVERCURRENT

PHASE/NEUTRAL/GROUND TOC	
Current	Phasor or RMS
Pickup level (Phase and Neutral)	0.020 to 30.000 pu in steps of 0.001

PHASE/NEUTRAL/GROUND TOC	
Pickup level (Ground and Sensitive Ground)	0.0020 to 30.000 pu in steps of 0.001. Note: A module with sensitive ground can only measure current up to 4.6 pu.
Pickup level (Process Bus Module, ground)	0.005 to 30.000 pu in steps of 0.001
Dropout level	97% of pickup
Level accuracy	
0.1 to 2.0 x CT rating	±0.5% of reading or ±0.4% of rated (whichever is greater)
>2.0 x CT rating	±1.5% of reading
Timing characteristics	IEEE Moderately/Very/Extremely Inverse; IEC (and BS) A/B/C and Short Inverse; GE IAC Inverse, Short/Very/ Extremely Inverse; I2t; FlexCurves™ (programmable); (Curve multiplier 0.00 to 600.00 in steps of 0.01 s) Definite Time (Time delay = 0.00 to 600.00 in steps of 0.01 s)
Reset type:	Instantaneous/Timed (per IEEE)
Curve timing accuracy at 1.03 to 20 x pickup	±3.5% of operate time or ±½ cycle (whichever is greater) from pickup to operate (see NOTE 1)
Voltage restraint	Modifies pickup current for voltage in the range of 0.1 < V < 0.9 VT Nominal in a fixed linear relationship

Note:
Protection and control elements have additional operating time delay of up to 3 ms if the product is ordered with an IEC 61850-9-2LE / IEC 61869 Process Bus Module (order code 85, 86, 87).

3.2.7 PHASE/NEUTRAL/GROUND INSTANTANEOUS OVERCURRENT

PHASE/NEUTRAL/GROUND IOC	
Pickup level Pickup level (Phase and Neutral)	0.020 to 30.000 pu in steps of 0.001
Pickup level (Ground and Sensitive Ground)	0.0020 to 30.000 pu in steps of 0.001. Note: A module with sensitive ground can only measure current up to 4.6 pu.
Pickup level (Process Bus Module, ground)	0.005 to 30.000 pu in steps of 0.001
Dropout level	97% of pickup
Level accuracy	
0.1 to 2.0 x CT rating	±0.5% of reading or ±0.4% of rated (whichever is greater)
>2.0 x CT rating	±1.5% of reading
Overreach	<2%
Pickup delay	0.00 to 600.00 s in steps of 0.01
Reset delay	0.00 to 600.00 s in steps of 0.01
Operate time	<16 ms at 3 × pickup at 60 Hz (Phase IOC) (see NOTE 1) <20 ms at 3 × pickup at 60 Hz (Neutral IOC) (see NOTE 1) <25 ms at 3 x pickup at 60 Hz (Ground IOC) (see NOTE 1)
Timer accuracy	±3.5% of operate time or ±1/4 cycle (whichever is greater)

3.2.8 NEGATIVE SEQUENCE TIME OVERCURRENT

NEGATIVE SEQUENCE TOC	
Current	Phasor
Pickup level	0.020 to 30.000 pu in steps of 0.001

NEGATIVE SEQUENCE TOC	
Dropout level	97% of pickup
Level accuracy	
0.1 to 2.0 x CT rating	±0.5% of reading or ±0.4% of rated (whichever is greater)
>2.0 x CT rating	±1.5% of reading
Timing characteristics	IEEE Moderately/Very/Extremely Inverse; IEC (and BS) A/B/C and Short Inverse; GE IAC Inverse, Short/Very/ Extremely Inverse; I2t; FlexCurves™ (programmable); (Curve multiplier 0.00 to 600.00 in steps of 0.01 s) Definite Time (Time delay = 0.00 to 600.00 in steps of 0.01 s)
Reset type:	Instantaneous/Timed (per IEEE) and linear
Curve timing accuracy at 1.03 to 20 x pickup	±3.5% of operate time or ±½ cycle (whichever is greater) from pickup to operate (see NOTE 1).

Note:
Protection and control elements have additional operating time delay of up to 3 ms if the product is ordered with an IEC 61850-9-2LE / IEC 61869 Process Bus Module (order code 85, 86, 87).

3.2.9 NEGATIVE SEQUENCE INSTANTANEOUS OVERCURRENT

NEGATIVE SEQUENCE OVERCURRENT	
Current	Phasor
Pickup level	0.020 to 30.000 pu in steps of 0.001
Dropout level	97% of pickup
Level accuracy	
0.1 to 2.0 x CT rating	±0.5% of reading or ±0.4% of rated (whichever is greater)
>2.0 x CT rating	±1.5% of reading
Overreach:	<2%
Pickup delay	0.00 to 600.00 s in steps of 0.01
Reset delay	0.00 to 600.00 s in steps of 0.01
Reset type:	Instantaneous/Timed (per IEEE) and linear
Operate time	<20 ms at 3 × pickup at 60 Hz (see NOTE 1)
Timer accuracy	±3% of operate time or ±1/4 cycle (whichever is greater)

3.2.10 PHASE DIRECTIONAL OVERCURRENT

PHASE DIRECTIONAL OVERCURRENT	
Relay connection	90° (quadrature)
Quadrature voltage	ABC phase seq.: phase A (VBC), phase B (VCA), phase C (VAB); ACB phase seq.: phase A (VCB), phase B (VAC), phase C (VBA)
Polarizing voltage threshold	0.004 to 3.000 pu in steps of 0.001
Current sensitivity threshold	0.05 pu
Characteristic angle	0 to 359° in steps of 1
Angle accuracy	±2°
Operation time (FlexLogic operands)	
Tripping (reverse load, forward fault)	<12 ms, typically (see NOTE 1)
Blocking (forward load, reverse fault)	<8 ms, typically (see NOTE 1)

Note:
Protection and control elements have additional operating time delay of up to 3 ms if the product is ordered with an IEC 61850-9-2LE / IEC 61869 Process Bus Module (order code 85, 86, 87).

3.2.11 NEUTRAL DIRECTIONAL OVERCURRENT

NEUTRAL DIRECTIONAL OVERCURRENT	
Directionality:	Co-existing forward and reverse
Polarizing:	Voltage, Current, Dual, Dual-V, Dual-I
Polarizing voltage	V_0 or VX
Polarizing current	IG
Operating current	I_0
Level sensing	3 × (|I_0| – K × |I_1|), IG Independent for forward and reverse
Restraint, K	0.000 to 0.500 in steps of 0.001
Characteristic angle	–90 to 90° in steps of 1
Limit angle	40 to 90° in steps of 1, independent for forward and reverse
Angle accuracy	±2°
Offset impedance	0.00 to 250.00 Ω in steps of 0.01
Pickup level	0.002 to 30.000 pu in steps of 0.01
Dropout level	97 to 98%
Operation time	<16 ms at 3 × pickup at 60 Hz (see NOTE 1)

Note:
Protection and control elements have additional operating time delay of up to 3 ms if the product is ordered with an IEC 61850-9-2LE / IEC 61869 Process Bus Module (order code 85, 86, 87).

3.2.12 NEGATIVE SEQUENCE DIRECTIONAL OVERCURRENT

NEGATIVE SEQUENCE DIRECTIONAL OVERCURRENT	
Directionality:	Co-existing forward and reverse
Polarizing:	Voltage
Polarizing voltage	V_2
Operating current	I_2
Level sensing zero-sequence	|I_0| – K × |I_1|
Level sensing negative-sequence	|I_2| – K × |I_1|
Restraint, K	0.000 to 0.500 in steps of 0.001
Characteristic angle	0 to 90° in steps of 1
Limit angle	40 to 90° in steps of 1, independent for forward and reverse
Angle accuracy	±2°
Offset impedance	0.00 to 250.00 Ω in steps of 0.01
Pickup level	0.002 to 30.000 pu in steps of 0.01
Dropout level	97%
Operation time	<16 ms at 3 × pickup at 60 Hz (see NOTE 1)

3.2.13 WATTMETRIC ZERO-SEQUENCE DIRECTIONAL

WATTMETRIC ZERO-SEQUENCE DIRECTIONAL	
Measured power	Zero-sequence
Number of elements	2
Characteristic angle	0 to 360° in steps of 1
Minimum power	0.001 to 1.200 pu in steps of 0.001
Pickup level accuracy	±1% or ±0.0025 pu, whichever is greater
Hysteresis	3% or 0.001 pu, whichever is greater
Timing characteristics	Inverse time, or FlexCurve (Curve multiplier= 0.01 to 2.00 in steps of 0.01 s); Definite Time (Time delay = 0.00 to 600.00 in steps of 0.01 s)
Curve timing accuracy	±3.5% of operate time or ±1 cycle (whichever is greater) from pickup to operate
Operate time	<30 ms at 60 Hz

3.2.14 SENSITIVE DIRECTIONAL POWER

SENSITIVE DIRECTIONAL POWER	
Measured power	3-phase, true RMS
Number of stages	2
Characteristic angle	0 to 359° in steps of 1
Calibration angle	0.00 to 0.95° in steps of 0.05
Minimum power	–3.300 to 3.300 pu in steps of 0.001
Pickup level accuracy	±1% or ±0.001 pu, whichever is greater
Hysteresis	2% or 0.001 pu, whichever is greater
Pickup delay	0 to 600.00 s in steps of 0.01
Timer accuracy	±3% of operate time or ±1/4 cycle (whichever is greater)
Operate time	<50 ms (plus up to 5 ms with Process Bus Module with order code 85, 86, 87)

3.2.15 PHASE UNDERVOLTAGE

PHASE UNDERVOLTAGE	
Voltage	Phasor only
Pickup level	0.004 to 3.000 pu in steps of 0.001
Dropout level	102% of pickup
Level accuracy	±0.5% of reading from 10 to 208 V
Timing characteristics	GE IAV Inverse (Curve multiplier 0.00 to 600.00 in steps of 0.01 s) Definite Time (Time delay = 0.00 to 600.00 in steps of 0.01 s) FlexCurves (programmable, Curve multiplier = 0.00 to 600.00 in steps of 0.01 s)
Reset delay	0 to 600.00 s in steps of 0.01 s
Curve timing accuracy at <0.90 x pickup	±3.5% of operate time or ±1/2 cycle (whichever is greater) from pickup to operate
Operate time	<30 ms at 0.9 pickup at 60 Hz for Definite Time mode

3.2.16 AUXILIARY UNDERVOLTAGE

AUXILIARY UNDERVOLTAGE	
Pickup level	0.004 to 3.000 pu in steps of 0.001
Dropout level	103% of pickup
Level accuracy	±0.5% of reading from 10 to 208 V
Timing characteristics	GE IAV Inverse (Curve multiplier 0.00 to 600.00 in steps of 0.01 s) Definite Time (Time delay = 0.00 to 600.00 in steps of 0.01 s) FlexCurves (programmable, Curve multiplier = 0.00 to 600.00 in steps of 0.01 s)
Reset delay	0 to 600.00 s in steps of 0.01 s
Curve timing accuracy at <0.90 x pickup	±3.5% of operate time or ±1/2 cycle (whichever is greater) from pickup to operate
Operate time	<30 ms at 0.9 pickup at 60 Hz for Definite Time mode

3.2.17 PHASE OVERVOLTAGE

PHASE OVERVOLTAGE	
Voltage	Phasor only
Pickup level	0.004 to 3.000 pu in steps of 0.001
Dropout level	98% of pickup
Level accuracy	±0.5% of reading from 10 to 208 V
Timing characteristics	GE IAV Inverse (Curve multiplier 0.00 to 600.00 in steps of 0.01 s) Definite Time (Time delay = 0.00 to 600.00 in steps of 0.01 s) FlexCurves (programmable, Curve multiplier = 0.00 to 600.00 in steps of 0.01 s)
Reset delay	0 to 600.00 s in steps of 0.01 s
Curve timing accuracy at >1.1 x pickup	±3.5% of operate time or ±1 cycle (whichever is greater) from pickup to operate
Operate time	<30 ms at 1.1 x pickup at 60 Hz for Definite Time mode

3.2.18 COMPENSATED OVERVOLTAGE

COMPENSATED OVERVOLTAGE	
Elements	1
Stages	3
Pickup level	0.25 to 3 pu in steps of 0.001
Level accuracy	±0.5% of reading from 10 to 208 V
Hysteresis:	97 to 98% of pickup
Pickup delay	0.00 to 600.00 s in steps of 0.01
Timer accuracy	±3% of operate time or ±20 ms (whichever is greater)
Operate time	< 2 cycles at 1.1 x pickup

3.2.19 NEUTRAL OVERVOLTAGE

NEUTRAL OVERVOLTAGE	
Pickup level	0.004 to 3.000 pu in steps of 0.001
Dropout level	97% of pickup
Level accuracy	±0.5% of reading from 10 to 208 V
Pickup delay	0.00 to 600.00 s in steps of 0.01 (definite time) or user-defined curve
Reset delay	0.00 to 600.00 s in steps of 0.01
Curve timing accuracy at >1.1 × pickup	±3.5% of operate time or ±1 cycle (whichever is greater) from pickup to operate
Operate time	<30 ms at 1.10 × pickup at 60 Hz

3.2.20 AUXILIARY OVERVOLTAGE

AUXILIARY OVERVOLTAGE	
Pickup level	0.004 to 3.000 pu in steps of 0.001
Dropout level	97% of pickup
Level accuracy	±0.5% of reading from 10 to 208 V
Timing characteristics	Definite Time (Time delay = 0.00 to 600.00 in steps of 0.01 s); GE IAV Inverse (Curve multiplier= 0.00 to 600.00 in steps of 0.01 s); FlexCurves (programmable, Curve multiplier= 0.00 to 600.00 in steps of 0.01 s)
Reset delay	0.00 to 600.00 s in steps of 0.01
Curve timing accuracy at >1.1 × pickup	±3.5% of operate time or ±1 cycle (whichever is greater) from pickup to operate
Operate time	<30 ms at 1.10 × pickup at 60 Hz for Definite Time mode
Operate time when 20 Hz injection is performed (G60 only):	8 power system cycles

3.2.21 NEGATIVE SEQUENCE OVERVOLTAGE

NEGATIVE SEQUENCE OVERVOLTAGE	
Pickup level:	0.004 to 1.250 pu in steps of 0.001
Dropout level:	97% of pickup
Level accuracy:	±0.5% of reading from 10 to 208 V
Pickup delay:	0 to 600.00 s in steps of 0.01
Reset delay:	0 to 600.00 s in steps of 0.01
Timer accuracy:	±3% of operate time or ±20 ms, whichever is greater
Operate time:	<30 ms at 1.10 x pickup at 60 Hz

3.2.22 UNDERFREQUENCY

UNDERFREQUENCY	
Minimum signal	0.10 to 1.25 pu in steps of 0.01
Pickup level	20.00 to 70.00 Hz in steps of 0.01

UNDERFREQUENCY	
Dropout level	pickup + 0.03 Hz
Level accuracy	±0.001 Hz
Time delay	0 to 65.535 s in steps of 0.001
Timer accuracy:	±3% of operate time or ±1/4 cycle (whichever is greater)
Operate time	typically 4 cycles at 0.1 Hz/s change typically 3.5 cycles at 0.3 Hz/s change typically 3 cycles at 0.5 Hz/s change
Typical times are average operate times including variables, such as frequency change instance, and test method, and can vary by ±0.5 cycles	

3.2.23 OVERFREQUENCY

OVERFREQUENCY	
Pickup level	20.00 to 70.00 Hz in steps of 0.01
Dropout level	pickup - 0.03 Hz
Level accuracy	±0.001 Hz
Time delay	0 to 65.535 s in steps of 0.001
Timer accuracy:	±3% of operate time or ±1/4 cycle (whichever is greater)
Operate time	typically 4 cycles at 0.1 Hz/s change typically 3.5 cycles at 0.3 Hz/s change typically 3 cycles at 0.5 Hz/s change
Typical times are average operate times including variables, such as frequency change instance, and test method, and can vary by ±0.5 cycles	

3.2.24 RATE OF CHANGE OF FREQUENCY

RATE OF CHANGE OF FREQUENCY	
df/dt trend	increasing, decreasing, bi-directional
df/dt pickup level	0.10 to 15.00 Hz/s in steps of 0.01
df/dt dropout level	96% of pickup
df/dt level accuracy	80 mHz/s or 3.5%, whichever is greater (up to df/dt trend of 10 Hz/s)
Overvoltage supervision	0.100 to 3.000 pu in steps of 0.001
Overcurrent supervision	0.020 to 30.000 pu in steps of 0.001
Pickup delay	0 to 65.535 s in steps of 0.001
Reset delay	0 to 65.535 s in steps of 0.001
Timer accuracy:	±3% of operate time or ±1/4 cycle (whichever is greater)
Operate time	typically 9.5 cycles at 2 × pickup typically 8.5 cycles at 3 × pickup typically 6.5 cycles at 5 × pickup
Typical times are average operate times including variables, such as frequency change instance, and test method, and can vary by ±0.5 cycles	

3.2.25 BREAKER FAILURE

BREAKER FAILURE	
Mode:	1-pole, 3-pole
Current supervision	phase, neutral current
Current supervision pickup	0.020 to 30.000 pu in steps of 0.001
Current supervision dropout	97% of pickup
Current supervision accuracy	
0.1 to 2.0 × CT rating	±0.75% of reading or ±2% of rated (whichever is greater)
above 2 × CT rating	±2.5% of reading

3.2.26 BREAKER ARCING CURRENT

BREAKER ARCING CURRENT	
Principle	accumulates breaker duty (I^2t) and measures fault duration
Initiation:	programmable per phase from any FlexLogic operand
Compensation for auxiliary relays	0 to 65.535 s in steps of 0.001
Alarm threshold	0 to 50000 kA^2-cycle in steps of 1
Fault duration accuracy	0.25 of a power cycle
Availability:	1 per CT bank with a minimum of 2

3.2.27 BREAKER FLASHOVER

BREAKER FLASHOVER	
Operating quantity	phase current, voltage, and voltage difference
Pickup level voltage	0.004 to 1.500 pu in steps of 0.001
Dropout level voltage	97% of pickup
Pickup level current	0.020 to 1.500 pu in steps of 0.001
Dropout level current	97% of pickup
Level accuracy	±0.5% or ±0.1% of rated, whichever is greater
Pickup delay	0 to 65.535 s in steps of 0.001
Timer accuracy	±3% of operate time or ±42 ms, whichever is greater
Operate time	<42 ms at 1.10 × pickup at 60 Hz (see NOTE 1)

Note:
Protection and control elements have additional operating time delay of up to 3 ms if the product is ordered with an IEC 61850-9-2LE / IEC 61869 Process Bus Module (order code 85, 86, 87).

3.2.28 BREAKER RESTRIKE

BREAKER RESTRIKE	
Principle	detection of high-frequency overcurrent condition ¼ cycle after breaker opens

BREAKER RESTRIKE	
Availability	one per digital signal processor (DSP)
Pickup level	0.1 to 2.00 pu in steps of 0.01
Reset delay	0.000 to 65.535 s in steps of 0.001

3.2.29 SYNCHROCHECK

SYNCHROCHECK	
Max voltage difference	0 to 400000 V in steps of 1
Max angle difference	0 to 100° in steps of 1
Max frequency difference	0.005 to 2.000 Hz in steps of 0.001
Hysteresis for max frequency difference	0.000 to 0.100 Hz in steps of 0.001
Dead source function	None, LV1 & DV2, DV1 & LV2, DV1 or DV2, DV1 xor DV2, DV1 & DV2 (L = Live, D = Dead)
S-CLS MAX dF	0.100 to 10.000 Hz in steps of 0.001
S-CLS MIN dF	0.005 to 1.000 Hz in steps of 0.001
V2 MAG CORR FACTOR	0.10 to 10.00 in steps of 0.01
V2 ANGLE SHIFT	-180° to +180° in steps of 1°
PHASE SELECT	Auto, VAG, VBG, VCG, VAB, VBC, VCA

3.2.30 AUTORECLOSE

AUTORECLOSE
Two breakers applications
Single- and three-pole tripping schemes
Up to four reclose attempts before lockout
Selectable reclosing mode and breaker sequence

3.2.31 PILOT-AIDED SCHEMES

PILOT-AIDED SCHEMES
Direct Underreaching Transfer Trip (DUTT)
Permissive Underreaching Transfer Trip (PUTT)
Permissive Overreaching Transfer Trip (POTT)
Hybrid POTT Scheme
Directional Comparison Blocking Scheme
Directional Comparison Unblocking Scheme (DCUB)

3.2.32 TRIP OUTPUT

TRIP OUTPUT	
Collects trip and reclose input requests and issues outputs to control tripping and reclosing.	
Communications timer delay	0 to 65535 s in steps of 0.001

TRIP OUTPUT	
Evolving fault timer	0.000 to 65.535 s in steps of 0.001
Timer accuracy	±3% of operate time or ±1/4 cycle (whichever is greater)

3.2.33 POWER SWING DETECT

POWER SWING DETECT	
Functions	Power swing block, out-of-step trip
Characteristic	Mho or Quad
Measured impedance	Positive-sequence
Blocking / tripping modes	2-step or 3-step
Tripping mode	Early or Delayed
Current supervision Pickup level	0.050 to 30.000 pu in steps of 0.001
Current supervision Dropout level	97 to 98% of pickup
Fwd / reverse reach (sec. Ω)	0.10 to 500.00 Ω in steps of 0.01
Left and right blinders (sec. Ω):	0.10 to 500.00 Ω in steps of 0.01
Impedance accuracy	±5%
Fwd / reverse angle impedances	40 to 90° in steps of 1
Angle accuracy	±2°
Characteristic limit angles	40 to 140° in steps of 1
Timers	0.000 to 65.535 s in steps of 0.001
Timer accuracy	±3% of operate time or ±1/4 cycle (whichever is greater)

3.2.34 LOAD ENCROACHMENT

LOAD ENCROACHMENT	
Responds to	Positive-sequence quantities
Minimum voltage	0.004 to 3.000 pu in steps of 0.001
Reach (sec. Ω)	0.02 to 250.00 Ω in steps of 0.01
Impedance accuracy	±5%
Angle	5 to 80° in steps of 1
Angle accuracy	±2°
Pickup delay	0 to 65.535 s in steps of 0.001
Reset delay	0 to 65.535 s in steps of 0.001
Timer accuracy:	±3% of operate time or ±1/4 cycle (whichever is greater)
Operate time:	<30 ms at 60 Hz (see NOTE 1)

Note:
Protection and control elements have additional operating time delay of up to 3 ms if the product is ordered with an IEC 61850-9-2LE / IEC 61869 Process Bus Module (order code 85, 86, 87).

3.2.35 OPEN POLE DETECTOR

OPEN POLE DETECTOR	
Detects an open pole condition, monitoring breaker auxiliary contacts, the current in each phase, and optional voltages on the line.	
Current pickup level	0.020 to 30.000 pu in steps of 0.001
Line capacitive reactances (X_{C1}, X_{C0})	300.0 to 9999.9 sec. Ω in steps of 0.1
Remote current pickup level	0.000 to 30.000 pu in steps of 0.001
Current dropout level	pickup + 3%, not less than 0.05 pu

3.2.36 THERMAL OVERLOAD

THERMAL OVERLOAD	
Thermal overload curves	IEC 255-8 curve
Base current	0.20 to 3.00 pu in steps of 0.01
Overload (k) factor	0.2 to 4 pu in steps of 0.05
Alarm level	0.2 to 1.0 pu in steps of 0.1
Trip time constant	0 to 999 min. in steps of 0.1
Reset time constant	0 to 999 min. in steps of 0.1
Minimum reset time	0 to 999 min. in steps of 0.1
Timer accuracy (cold curve)	±100 ms or 2%, whichever is greater
Timer accuracy (hot curve)	±500 ms or 2%, whichever is greater for Ip < 0.9 × k × Ib and I / (k × Ib) > 1.1

3.2.37 TRIP BUS (TRIP WITHOUT FLEXLOGIC)

TRIP BUS (TRIP WITHOUT FLEXLOGIC)	
Number of elements	6
Number of inputs	16
Operate time	<2 ms at 60 Hz
Timer accuracy	±3% or 10 ms, whichever is greater

3.2.38 HARMONIC DETECTION

HARMONIC DETECTION	
Number of elements	4
Pickup threshold	2.0 to 100.0% of I(f1) (current fundamental frequency phasor) in steps of 0.1%
Pickup level accuracy	
Harmonics	With I(f1) from 0.4 to 2.0 × CT rating: ±2% of reading or ±1% of 100%, whichever is greater
THD	With I(f1) from 0.4 to 2.0 × CT rating: ±2% of reading or ±1% of 100% per each harmonic, whichever is greater
Pickup delay	0 to 600.00s in steps of 0.01
Timer accuracy	±3% of delay setting or ±1/4 cycle (whichever is greater) from pickup to operate

HARMONIC DETECTION	
Operating time	<10 ms at 2 × pickup at 60 Hz

Note:
Accuracy of the DC measurement depends on the duration and content of the DC component, compared to the fundamental frequency current. It also depends on the source of the signal. DSP or HardFiber transducers can saturate and cause higher error than stated here, while with an MU-320 merging unit as a source, it meets the accuracy stated here due to immunity of the MU-320 to saturation.

3.2.39 MULTI-RANGE SIGNAL OSCILLATION DETECTOR

MULTI-RANGE SIGNAL OSCILLATOR DETECTOR	
Number of elements	2
Input signal to detector	
For frequency band I to III	Source Voltage Va Mag, Vb Mag, Vc Mag, V1 Mag, Source Current Ia, Mag, Ib Mag, Ic Mag, I1 Mag, Source Real 3-phase Power and Source Reactive 3-phase Power
For frequency band IV	Source Voltages (samples) Va, Vb, Vc, Vx, V_clarke, or Source Currents: Ia, Ib, Ic, In, I_clarke
Minimum pickup of Mag_osc	0.02 to 10.00 pu for alarm and 0.05 to 10.00 pu for trip in steps of 0.01 pu
Pickup level accuracy	±5% of reading or 5% of rated (whichever is greater) for oscillation signal >0.1 pu
Pickup delay	Definite time: 0 to 600.00 s in steps of 0.01 s
Time accuracy:	±3% or ±20 ms, whichever is greater
Operate time: ±3% or ±20 ms, whichever is greater	Typical operating time of 2/f_osc + 0.04 s without damping ratio supervision Typical operating time of 3/f_osc + max(0.02, 0.25/f_osc) s with damping ratio supervision The operating time is dependent on the oscillation inception point, the oscillation frequency and the magnitude of the oscillation, and therefore can vary from these values

3.3 USER-PROGRAMMABLE ELEMENTS

3.3.1 FLEXLOGIC

FLEXLOGIC	
Programming language	Reverse Polish Notation with graphical visualization (keypad programmable)
Lines of code	1024
Internal variables	64
Supported operations	NOT, XOR, OR (2 to 16 inputs), AND (2 to 16 inputs), NOR (2 to 16 inputs), NAND (2 to 16 inputs), latch (reset-dominant), edge detectors, timers
Inputs:	any logical variable, contact, or virtual input
Number of timers	64
Pickup delay	0 to 60000 (ms, sec., min.) in steps of 1
Dropout delay	0 to 60000 (ms, sec., min.) in steps of 1
Timer accuracy	±0.1% of operate time or ±1/8 cycle, whichever is greater

3.3.2 FLEXCURVES

FLEXCURVES	
Number	4 (A through D)
Reset points	40 (0 through 1 of pickup)
Operate points	80 (1 through 20 of pickup)
Time delay	0 to 65535 ms in steps of 1

3.3.3 FLEXSTATES

FLEXSTATES	
Number	up to 256 logical variables grouped under 16 Modbus addresses
Programmability	any logical variable, contact, or virtual input

3.3.4 FLEXELEMENTS

FLEXELEMENTS	
Number of elements:	16
Operating signal	any analog actual value, or two values in differential mode
Operating signal mode	signed or absolute value
Operating mode	level, delta
Comparator direction	over, under
Pickup level	–90.000 to 90.000 pu in steps of 0.001
Hysteresis	0.1 to 50.0% in steps of 0.1
Delta dt	20 ms to 60 days
Pickup and dropout delay	0.000 to 65.535 s in steps of 0.001

3.3.5 NON-VOLATILE LATCHES

NON-VOLATILE LATCHES	
Type	set-dominant or reset-dominant
Number	16 (individually programmed)
Output	stored in non-volatile memory
Execution sequence	as input prior to protection, control, and FlexLogic

3.3.6 USER-PROGRAMMABLE LEDS

USER-PROGRAMMABLE LEDs (Enhanced and basic front panels)	
Number:	48 plus trip and alarm
Programmability	from any logical variable, contact, or virtual input
Reset mode	self-reset or latched

3.3.7 LED TEST

LED TEST	
Initiation	from any contact input or user-programmable condition
Number of tests	3, interruptible at any time
Duration of full test	approximately 3 minutes
Test sequence 1	all LEDs on
Test sequence 2	all LEDs off, one LED at a time on for 1 s
Test sequence 3	all LEDs on, one LED at a time off for 1 s

3.3.8 USER-DEFINABLE DISPLAYS

USER-DEFINABLE DISPLAYS (Enhanced and basic front panels)	
Number of displays	16
Lines of display	2 × 20 alphanumeric characters
Parameters	up to 5, any Modbus register addresses
Invoking and scrolling	keypad, or any user-programmable condition, including pushbuttons

3.3.9 CONTROL PUSHBUTTONS

CONTROL PUSHBUTTONS (Enhanced and basic front panels)	
Number of pushbuttons	7
Operation	drive FlexLogic operands

3.3.10 USER-PROGRAMMABLE PUSHBUTTONS

CONTROL PUSHBUTTONS (Enhanced and basic front panels)	
Number of pushbuttons	12 on basic front panel 16 on enhanced horizontal front panel 6 on enhanced vertical front panel 48 on graphical front panel (8 physical pushbuttons, 40 graphical interface pushbuttons)
Mode	self-reset, latched

CONTROL PUSHBUTTONS (Enhanced and basic front panels)	
Display message	2 lines of 20 characters each
Drop-out timer	0.00 to 60.00 s in steps of 0.05
Autoreset timer	0.2 to 600.0 s in steps of 0.1
Hold timer	0.0 to 10.0 s in steps of 0.1

3.3.11 SELECTOR SWITCH

SELECTOR SWITCH	
Number of elements	2
Upper position limit	1 to 7 in steps of 1
Selecting mode	time-out or acknowledge
Time-out timer	3.0 to 60.0 s in steps of 0.1
Control inputs	step-up and 3-bit
Power-up mode	restore from non-volatile memory or synchronize to a 3-bit control input or synch/restore mode

3.3.12 DIGITAL ELEMENTS

DIGITAL ELEMENTS	
Number of elements:	96
Operating signal	any FlexLogic operand
Pickup delay	0.000 to 999999.999 s in steps of 0.001
Dropout delay	0.000 to 999999.999 s in steps of 0.001
Timing accuracy	±3% or ±4 ms, whichever is greater

3.4 MONITORING

3.4.1 OSCILLOGRAPHY

OSCILLOGRAPHY	
Number of records	3 to 64, configurable
Sampling rate	8, 16, 32, or 64 samples per power cycle, configurable
Triggers	any FlexLogic operand, configurable
Trigger position	0 to 100%, configurable
Recorded data	raw AC input channels up to 127 configured digital channels (+ 1 trigger operand), representing any FlexLogic operand up to 32 configured analog channels, representing any measured analog value
Data storage	in non-volatile memory
Format:	COMTRADE IEEE C37.111 (1999 or 2013)

3.4.2 EVENT RECORDER

EVENT RECORDER	
Capacity	1024 events
Time-tag	to 1 microsecond
Triggers	any FlexLogic operand, configurable
Data storage	in non-volatile memory

3.4.3 DATA LOGGER

DATA LOGGER	
Number of channels	1 to 16
Parameters	any available analog actual value
Sampling rate	15 to 3600000 ms in steps of 1
Trigger	any FlexLogic operand
Mode	continuous or triggered
Storage capacity: 1-second rate: (NN is dependent on memory)	01 channel for NN days 16 channels for NN days
Storage capacity: 60-minute rate: (NN is dependent on memory)	01 channel for NN days 16 channels for NN days

3.4.4 FAULT LOCATOR

FAULT LOCATOR	
Number of independent fault locators:	1
Method	single-ended

FAULT LOCATOR	
Voltage source	wye-connected VTs, delta-connected VTs and neutral voltage, delta-connected VTs and zerosequence current (approximation)
Maximum accuracy if	fault resistance is zero and fault currents from all line terminals are approximately in phase (single-ended method)
Relay accuracy	±1.5% (V > 10 V, I > 0.2 pu), single-ended method ±0.5% (V > 10 V, I > 0.2 pu), multi-ended method
Worst-case accuracy	
$VT_{\%error}$ +	user data
$CT_{\%error}$ +	user data
$ZLine_{\%error}$ +	user data
$METHOD_{error}$ +	1.5% single-ended method
$METHOD_{error}$ +	0.5% multi-ended method
See Theory of Operation chapter, Fault Locator section	

3.4.5 PHASOR MEASUREMENT UNIT

PHASOR MEASUREMENT UNIT	
Output format:	per IEEE C37.118-2011, C37.118.1a-2014, or IEC 61850-90-5 standard
Number of channels	14 synchrophasors, 16 analogs, 16 digitals
TVE (total vector error)	<1%
Triggering	frequency, voltage, current, power, rate of change of frequency, user-defined
Reporting rate	1, 2, 5, 10, 12, 15, 20, 25, 30, 50, or 60 times per second for P and M class, and 100 or 120 times per second for P class only
Number of clients	one over TCP/IP port and one over UDP/IP per aggregator
AC ranges	as indicated in appropriate specification sections
Network reporting format	16-bit integer (for IEEE C37.118) or 32-bit IEEE floating point numbers
Network reporting style	rectangular (real and imaginary for IEEE C37.188) or polar (magnitude and angle) coordinates
Post-filtering	none, 3-point, 5-point, 7-point
Calibration	±5° (angle) and ±5% (magnitude)

3.5 METERING

3.5.1 RMS CURRENT: PHASE, NEUTRAL AND GROUND

RMS CURRENT: PHASE, NEUTRAL, AND GROUND	
Accuracy at 0.1 to 2.0 × CT rating	±0.25% of reading or ±0.1% of rated (whichever is greater)
Accuracy at > 2.0 × CT rating	±1.0% of reading

3.5.2 RMS VOLTAGE

VOLTAGE	
Accuracy:	±0.5% of reading from 10 to 208 V

3.5.3 REAL POWER (WATTS)

REAL POWER (WATTS)	
Accuracy at 0.1 to 1.5 x CT rating and 0.8 to 1.2 x VT rating:	±1.0% of reading at $-1.0 \leq PF < -0.8$ and $0.8 < PF \leq 1.0$

3.5.4 REACTIVE POWER (VARS)

REACTIVE POWER (VARS)	
Accuracy at 0.1 to 1.5 x CT rating and 0.8 to 1.2 x VT rating:	±1.0% of reading at $-0.2 \leq PF \leq 0.2$

3.5.5 APPARENT POWER (VA)

APPARENT POWER (VA)	
Accuracy at 0.1 to 1.5 x CT rating and 0.8 to 1.2 x VT rating:	±1.0% of reading

3.5.6 WATT-HOURS (POSITIVE AND NEGATIVE)

WATT-HOURS (POSITIVE AND NEGATIVE)	
Accuracy	±2.0% of reading
Range	±0 to 1 × 10^6 MWh
Parameters	three-phase only
Update rate	50 ms

3.5.7 VAR-HOURS (POSITIVE AND NEGATIVE)

VAR-HOURS (POSITIVE AND NEGATIVE)	
Accuracy	±2.0% of reading
Range	±0 to 1 × 10^6 Mvarh
Parameters	three-phase only
Update rate	50 ms

3.5.8 FREQUENCY

FREQUENCY	
Accuracy for input at V = 0.8 to 1.2 pu	±0.001 Hz (when voltage signal is used for frequency measurement)
Accuracy for input at I = 0.1 to 0.25 pu	±0.02 Hz (when current signal is used for frequency measurement)
Accuracy for input at I > 0.25 pu	±0.005 Hz (when current signal is used for frequency measurement)

3.5.9 DEMAND

DEMAND	
Measurements	Phases A, B, and C present and maximum measured currents 3-Phase Power (P, Q, and S) present and maximum measured currents
Accuracy	±2.0%

3.6 POWER SUPPLY

3.6.1 LOW RANGE

LOW RANGE	
Nominal DC voltage	24 to 48 V
Minimum DC voltage	20 V
Maximum DC voltage	75 V for SL power supply module
Voltage loss hold-up	200 ms duration at maximum load

Note:
Low range is DC only

3.6.2 HIGH RANGE

HIGH RANGE	
Nominal DC voltage	125 to 250 V
Minimum DC voltage	88 V
Maximum DC voltage	300 V
Nominal AC voltage	100 to 240 V at 50/60 Hz
Minimum AC voltage	88 V at 25 to 100 Hz
Maximum AC voltage	265 V at 25 to 100 Hz
Voltage loss hold-up	200 ms duration at maximum load

3.6.3 ALL RANGES

ALL RANGES	
Volt withstand	2 × Highest Nominal Voltage for 10 ms
Power consumption typical	15 to 20 W/VA
Power consumption maximum	45 W/VA

Note:
Contact factory for exact order code consumption

3.6.4 INTERNAL FUSE

INTERNAL FUSE	
Rating (low range)	8 A / 250 V
Rating (high range)	4 A / 250 V
Interrupting capacity (AC)	100 000 A RMS symmetrical
Interrupting capacity (DC)	10 000 A

3.6.5 SUPERCAPACITOR

Supercapacitor	
Hold-up time for real-time clock	25 days at 25°C

3.7 INPUTS

3.7.1 AC CURRENT

AC CURRENT	
CT rated primary	1 to 50000 A
CT rated secondary	1 or 5 A by connection
Relay burden	< 0.2 VA at rated secondary
Conversion range (Standard CT):	0.02 to 46 × CT rating RMS symmetrical
Conversion range (Sensitive Ground CT module):	0.002 to 4.6 × CT rating RMS symmetrical
Current withstand:	20 ms at 250 times rated 1 sec at 100 times rated continuous 4x Inom URs equipped with 24 CT inputs have a maximum operating temperature of 50°C
Short circuit rating	150000 RMS symmetrical amperes, 250 V maximum (primary current to external CT)

3.7.2 AC VOLTAGE

AC VOLTAGE	
VT rated secondary	25.0 to 240.0 V
VT ratio	1.00 to 24000.00
Relay burden	< 0.25 VA at 120 V
Conversion range	1 to 275 V
Voltage withstand	continuous at 260 V to neutral 1 min/hr at 420 V to neutral

3.7.3 FREQUENCY

FREQUENCY	
Nominal frequency setting	25 to 60 Hz
Sampling frequency	64 samples per power cycle
Tracking frequency range with DSP	20 to 65 Hz

3.7.4 CONTACT INPUTS

CONTACT INPUTS	
Dry contacts	1000 Ω maximum
Wet contacts	300 V DC maximum
Selectable thresholds	17 V, 33 V, 84 V, 166 V
Tolerance	±10%
Contacts per common return (standard module)	4
Contacts per common return (6Y I/O module)	2

CONTACT INPUTS	
Recognition time	< 1 ms
Debounce time	0.0 to 16.0 ms in steps of 0.5
Continuous current draw (standard module)	4 mA (when energized)
Continuous current draw (6Y I/O module)	2 mA (when energized)

3.7.5 CONTACT INPUTS WITH AUTO-BURNISHING

CONTACT INPUTS WITH AUTO-BURNISHING	
Dry contacts	1000 Ω maximum
Wet contacts	300 V DC maximum
Selectable thresholds	17 V, 33 V, 84 V, 166 V
Tolerance	±10%
Contacts per common return	2
Recognition time	< 1 ms
Debounce time	0.0 to 16.0 ms in steps of 0.5
Continuous current draw	4 mA (when energized)
Auto-burnish impulse current	50 to 70 mA
Duration of auto-burnish impulse	25 to 50 mS

3.7.6 DCMA INPUTS

DCMA INPUTS	
Current input (mA DC)	0 to –1, 0 to +1, –1 to +1, 0 to 5, 0 to 10, 0 to 20, 4 to 20 (programmable)
Input impedance	379 Ω ±10%
Conversion range	–1 to + 20 mA DC
Accuracy	±0.2% of full scale
Type	Passive

3.7.7 RTD INPUTS

RTD INPUTS	
Types (3-wire)	100 Ω Platinum, 100 and 120 Ω Nickel, 10 Ω Copper
Sensing current	5 mA
Range	–50 to +250°C
Accuracy	±2°C
Isolation	36 V pk-pk

3.7.8 IRIG-B INPUT

IRIG-B INPUT	
IRIG formats accepted:	B000…B007, B120…B127
IRIG control bits	IEEE Std C37.118.1-2011

IRIG-B INPUT	
Amplitude modulation	1 to 10 V pk-pk
DC shift operating range:	0 to 10 V DC
TTL logic low	0.0 to 0.8 V DC
TTL logic high	2.0 to 5.0 V DC
Input impedance	50 kΩ
Isolation	2 kV

3.7.9 DIRECT INPUTS

DIRECT INPUTS	
Input points:	3264256
Remote devices:	16
Default states on loss of comms:	On, Off, Latest/Off, Latest/On
Ring configuration:	Yes, No
Data rate:	64 or 128 kbps
CRC:	32-bit
CRC alarm responding to:	Rate of messages failing the CRC
CRC alarm monitoring message count:	10 to 10000 in steps of 1
CRC alarm threshold:	1 to 1000 in steps of 1
Unreturned message alarm responding to:	Rate of unreturned messages in the ring configuration
Unreturned message alarm monitoring message count:	10 to 10000 in steps of 1
Unreturned message alarm threshold:	1 to 1000 in steps of 1

3.7.10 TELEPROTECTION

TELEPROTECTION	
Input points:	16
Remote devices:	3
Default states on loss of comms:	On, Off, Latest/Off, Latest/On
Ring configuration:	No
Data rate:	64 or 128 kbps
CRC:	32-bit

3.8 OUTPUTS

3.8.1 FORM-A RELAY

FORM-A RELAY	
Make and carry for 0.2 s	30 A as per ANSI C37.90
Carry continuous	6 A
Break (DC inductive, L/R = 40 ms)	1 A at 24V 0.5 A at 48 V 0.3 A at 125 V 0.2 A at 250 V
Operate time	< 4 ms
Contact material	silver alloy
Contacts per common return (6Y I/O module)	2
Contacts with voltage monitoring (6Y I/O module)	2

6Y FORM-A VOLTAGE MONITOR	
Applicable voltage	approx. 15 to 250 V DC
Carry continuous	approx. 2mA

3.8.2 LATCHING RELAY

LATCHING RELAY	
Make and carry for 0.2 s	30 A as per ANSI C37.90
Carry continuous	6 A as per IEEE C37.90
Break (DC resistive as per IEC 61810-1)	6 A at 24V 1.6 A at 48 V 0.4 A at 125 V 0.2 A at 250 V
Operate time	6ms (Typical) <10ms (maximum)
Contact material	Silver alloy
Control	Separate operate and reset inputs
Control mode	Operate-dominant or reset-dominant

3.8.3 FORM-A MONITORS

FORM-A MONITORS	
FORM-A VOLTAGE MONITOR	
Applicable voltage	approx. 15 to 250 V DC
Trickle current	approx. 1 to 2.5 mA
FORM-A CURRENT MONITOR	
Threshold current	approx. 80 to 100 mA

3.8.4 FORM-C AND CRITICAL FAILURE RELAY

FORM-A RELAY	
Make and carry for 0.2 s	30 A as per ANSI C37.90

FORM-A RELAY	
Carry continuous	8 A
Break (DC inductive, L/R = 40 ms)	1 A at 24V 0.5 A at 48 V 0.3 A at 125 V 0.2 A at 250 V
Operate time	< 8 ms
Contact material	silver alloy

3.8.5 FAST FORM-C RELAY

FORM-A RELAY	
Make and carry	0.1A max (resistive load)
Minimum load impedance (2 W resistor)	20 KΩ at 250 V DC 5 KΩ at 120 V DC 2 KΩ at 48 V DC 2 KΩ at 24 V DC
Minimum load impedance (1 W resistor)	50 KΩ at 250 V DC 2 KΩ at 120 V DC 2 KΩ at 48 V DC 2 KΩ at 24 V DC
Note: *Values for 24 V and 48 V are the same due to a required 95% voltage drop across the load impedance.*	
Operate time	< 0.6 ms
Internal Limiting Resistor	100 Ω, 2 W

3.8.6 SOLID-STATE OUTPUT RELAY

SOLID-STATE OUTPUT RELAY	
Operate and release time	<100 µs
Maximum voltage	265 V DC
Maximum leakage current in off state (excluding voltage monitor circuit current)	100 µA
Maximum continuous current	5 A at 45°C; 4 A at 65°C
Make and carry (for 0.2 s)	30 A as per ANSI C37.90
Make and carry (for 0.03 s)	300 A

Breaking Capacity

Specification	UL 508	Utility application (autoreclose scheme)	Industrial application
Operations per interval	5000 operations, 1 second on, 9 seconds off	5 operations, 0.2 seconds on, 0.2 seconds off, within 1 minute	10000 operations, 0.2 seconds on, 30 seconds off
	1000 operations, 0.5 seconds on, 0.5 seconds off		

Specification	UL 508	Utility application (autoreclose scheme)	Industrial application
Break capability (0 to 250 V DC)	3.2 A at L/R = 10 ms	10 A at L/R = 40 ms	10 A at L/R = 40 ms
	1.6 A at L/R = 20 ms		
	0.8 A L/R = 40 ms		

3.8.7 CONTROL POWER EXTERNAL OUTPUT

CONTROL POWER EXTERNAL OUTPUT (For dry contact input)	
Capacity	100 mA DC at 48 V DC
Isolation	±300 Vpk

3.8.8 DIRECT OUTPUTS

DIRECT OUTPUTS	
Output points	3264356

3.8.9 DCMA OUTPUTS

DCMA OUTPUTS	
Range	–1 to 1 mA, 0 to 1 mA, 4 to 20 mA
Max. load resistance	12 kΩ for –1 to 1 mA range 12 kΩ for 0 to 1 mA range 600 Ω for 4 to 20 mA range
Accuracy:	±0.75% of full-scale for 0 to 1 mA range ±0.5% of full-scale for –1 to 1 mA range ±0.75% of full-scale for 0 to 20 mA range
99% Settling time to a step change	100 ms
Isolation	1.5 kV
Driving signal	any FlexAnalog quantity
Upper and lower limit for the driving signal	–90 to 90 pu in steps of 0.001

3.9 COMMUNICATION PROTOCOLS

IEC 61850	
IEC 61850	Supports IEC 61850 Editions 1.0 and 2.0. See the UR Family Communications Guide and its conformance statements.

RS232 (Enhanced and basic front panels)	
Front port	19.2 kbps, Modbus RTU

USB (Graphical front panel)	
Front port	USB 2.0 type B

RS485	
1 rear port	up to 115 kbps, Modbus RTU, DNP 3, IEC 60870-5-103
Typical distance	1200 m
Isolation	2 kV, isolated together at 36 Vpk

FIBER ETHERNET PORT	
Operates with 50/125 µm and 62.5/125 µm multimode fiber	
Parameters (100 Mb multimode)	
Wavelength	1310 nm
Connector	LC
Transmit power	–20 dBm
Receiver sensitivity	–30 dBm
Power budget	10 dB
Maximum input power	–14 dBm
Typical distance	2 km
Full duplex	yes
Redundancy	yes

ETHERNET	
Modes	10 Mb, 10/100 Mb (auto-detect)
Connector	RJ45
Cable type	CAT 5 or CAT 6 Shielded twisted Pair (STP)

SIMPLE NETWORK TIME PROTOCOL (SNTP)	
Clock synchronization error	<10 ms (typical)

PRECISION TIME PROTOCOL (PTP) PTP IEEE Std 1588-2008 (version 2)	
Power Profile (PP)	as per IEEE StandardPC37.238-2017

PRECISION TIME PROTOCOL (PTP) PTP IEEE Std 1588-2008 (version 2)	
Clock	Slave-only ordinary clock when using station bus Ethernet interface. Boundary clock when using process bus Ethernet interface

PARALLEL REDUNDANCY PROTOCOL (PRP) (IEC 62439-3 CLAUSE 4, 2012)	
Ethernet ports used	2 and 3
Networks supported	10/100 Mb Ethernet

PROCESS BUS MODULE (NON-HARDFIBER)	
Ethernet ports	2 x 1000Base-SX, 1 Gbps LC connectors, 4 x 1000Base-SX (1 Gbps) + 4 x 100Base-FX (100 Mbps) LC connectors 4 x 100Base-FX, LC connectors
Number of sampled value (SV) streams:	Up to 8
SV subscription profiles	IEC 61850-9-2LE (1 ASDU only) or IEC 61869-9 (1 or 2 ASDUs)
Sampling Rate	
IEC 61850-9-2	4800 Hz (80 samples/cycle) fixed for 60 Hz - Protection class 4000 Hz (80 samples/cycle) fixed for 50 Hz - Protection class
IEC 61869-9	4800 Hz for 60/50 Hz - Protection class
GOOSE support	P1 class 1 TxGOOSE, and 8 RxGOOSE
Network Config modes:	IEC 62439-3:2012 PRP (ports 1 and2) IEC 62439-3:2012 HSR (ports 1 and 2) IEC 62439-3:2012 Dual HSR (ports 1 and 2, 5 and 6); or Point-to-Point (ports 1 to 8)
Time synchronization	IEC 61850-9-3 PTPv2 Utility profile PTPv2/PP (IEEE C37.238-2017 over Process Bus Module PTPv2/PP (IEEE C37.238-2017; or IRIG-B over CPU for PTP master
Time synchronization mode:	Slave-only, master-slave on Process Bus Module, and slave-only on CPU
Simulation mode:	Supported for both GOOSE and SV
Test mode (test, test/block)	Supported for both GOOSE and SV
OTHER	
Other protocols	TFTP, SFTP, HTTP, IEC 60870-5-104, Ethernet Global Data (EGD), IEEE C37.118

3.10 INTER-RELAY COMMUNICATIONS

3.10.1 STP INTERFACE OPTIONS

SHIELDED TWISTED-PAIR INTERFACE OPTIONS	
Interface type	**Typical distance**
RS422	1200 m

Note:
RS422 distance is based on transmitter power and does not take into consideration the clock source provided by the user

3.10.2 LINK POWER BUDGET AND MAXIMUM OPTICAL INPUT POWER

LINK POWER BUDGET AND MAXIMUM OPTICAL INPUT POWER

Emitter, fiber type	Cable type	Transmit power	Received sensitivity	Power budget	Maximum optical input power
820 nm, multimode	62.5/125 µm	-16 dBm	-32 dBm	16 dBm	-8 dBm
	50/125 µm	-20 dBm		12 dBm	
1300 nm, multimode	62.5/125 µm	-16 dBm	-32 dBm	16 dBm	-8 dBm
	50/125 µm	-20 dBm		12 dBm	
1300 nm, single mode	9/125 µm	-15 dBm	-32 dBm	17 dBm	-8 dBm
1300 nm, laser, single mode	9/125 µm	0 dBm	-34 dBm	34 dBm	-8 dBm
1550 nm, laser single mode	9/125 µm	5 dBm	-34 dBm	39 dBm	-10 dBm

The following specifications apply to filter interface modules implemented before January 2012:

Emitter, fiber type	Transmit power	Received sensitivity	Power budget	Maximum optical input power
820 nm LED, multimode	–20 dBm	–30 dBm	10 dB	–7.6 dBm
1300 nm LED, multimode	–21 dBm	–30 dBm	9 dB	–11 dBm
1300 nm ELED, single mode	–23 dBm	–32 dBm	9 dB	–14 dBm
1300 nm Laser, single mode	–1 dBm	–30 dBm	29 dB	–14 dBm
1550 nm Laser, single mode	+5 dBm	–30 dBm	35 dB	–14 dBm

Note:
The power budgets are calculated from the manufacturer's worst-case transmitter power and worst case receiver sensitivity.

Note:
The power budgets for the 1300 nm ELED are calculated from the manufacturer's transmitter power and receiver sensitivity at ambient temperature. At extreme temperatures these values deviate based on component tolerance. On average, the output power decreases as the temperature is increased by a factor of 1 dB / 5 °C.

3.10.3 TYPICAL LINK DISTANCE

Emitter, fiber type	Cable type	Connector type	Typical distance	
			Before Jan 2012	From Jan 2012
820 nm LED, multimode	62.5/125 µm	ST	1.65 km	2 km
	50/125 µm	ST	1.65 km	2 km
1300 nm LED, multimode	62.5/125 µm	ST	4 km	5 km
	50/125 µm	ST	4 km	5 km
1300 nm ELED, single mode	9/125 µm	ST	11.4 km	20 km
1300 nm laser, single mode	9/125 µm	ST	64 km	65 km
1550 nm laser, single mode	9/125 µm	ST	105 km	125 km

Note:
Typical distances listed are based on the following assumptions for system loss. As actual losses vary from one installation to another, the distance covered by your system can vary.

3.10.4 LOSSES AND MARGIN

CONNECTOR LOSSES (Total at both ends)	
ST connector	0.7 dB (each)

FIBER LOSSES	
820 nm multimode	3 dB/km
1300 nm multimode	1 dB/km
1300 nm single mode	0.35 dB/km
1550 nm single mode	0.25 dB/km
Splice losses	one splice every 2 km at 0.05 dB loss per splice

SYSTEM MARGIN	
Additional loss added to calculations to compensate for all other losses	3 dB
Compensated difference in transmitting and receiving (channel asymmetry) channel delays using GPS satellite clock:	10 ms

3.11 CYBERSENTRY SECURITY

OPTIONS	
Software options	Level 1, Level 2

3.12 GRAPHICAL FRONT PANEL

DISPLAY	
Type	Color graphical back-lit LCD display
Size	7 inches (17.8 cm)
Resolution	800 by 480 pixels
Pages	5 single-line diagram pages with controls, status, and metering values Up to 8 annunciator pages with total of 96 annunciator windows 1 phasor metering page for each AC Source 5 tabular metering pages with dynamic metering and status Event records page with dynamic update Product information page Settings, actual values, error messages (targets)

LED INDICATORS	
Functions	5 device status indicators 9 event cause indicators 8 user-programmable pushbutton indicators

PUSHBUTTONS	
Type	membrane
Functions	5 bottom Tab pushbuttons and 1 Home pushbutton for page recall 4 directional, 1 ENTER, and 1 ESCAPE pushbutton element selection 10 side pushbuttons for power system element control RESET pushbutton

INGRESS PROTECTION	
IP code	IP40 front (IP54 front with IP54 mounting collar accessory) IP10 back (IP20 back with IP20 cover accessory)

3.13 ENVIRONMENTAL

AMBIENT TEMPERATURES	
Maximum operating range	–40 to 85°C
Continuous operating range	–40 to 60°C*

Note:
**Based on IEC 60068-2-1 and IEC 60068-2-2, Variant Bd and Ad for 16 hrs. The UR can operate up to a surrounding ambient of 85°C, however operating outside the recommended continuous temperature range for extended periods can result in MTBF degradation.*

Note:
LCD contrast and performance will degrade below -20C. Contrast and performance will return to normal once temperature returns above -20C.

Ideal Storage Temperature Range	15ºC to 27ºC

HUMIDITY	
Humidity	Operating up to 95% (non-condensing) at 55°C (as per IEC 60068-2-30 variant 1, 6 days)
Ideal Storage Humidity Range	30% to 60%
Relative Humidity (RH) Air Quality	Proper ventilation is recommended

OTHER	
Altitude	2000 m (maximum)
Pollution degree	II
Overvoltage category	II
Ingress protection	IP20 front, IP10 back (basic front panel and Rev. 1 enhanced front panel) IP40 front, IP10 back (Rev. 2 enhanced front panel) IP54 front with IP54 mounting collar accessory (Rev. 2 enhanced front panel)
Ingress protection with IP20 cover accessory	IP20 back
Noise	0 dB

3.14 TYPE TESTS

Test	Reference standard	Test level
Dielectric voltage withstand	EN 60255-5*	2.2 kV
Impulse voltage withstand	EN 60255-51*	5 kV
Damped oscillatory	IEC 61000-4-18 / IEC 60255-26-1	2.5 kV CM, 1 kV DM
Electrostatic discharge	EN 61000-4-2 / IEC 60255-26-2	Level 3
RF immunity	EN 61000-4-3 / IEC 60255-26-3	Level 3
Fast transient disturbance	EN 61000-4-4 / IEC 60255-26-4	Class A and B
Surge immunity	EN 61000-4-5 / IEC 60255-26-5	Level 3 and 4
Conducted RF immunity	EN 61000-4-6 / IEC 60255-26-6	Level 3
Power frequency immunity	EN 61000-4-7* / IEC 60255-26-7	Class A and B
Voltage interruption and ripple DC	IEC 60255-11	12% ripple, 200 ms interrupts
Radiated and conducted emissions	CISPR11 / CISPR22 / IEC 60255-25	Class A
Sinusoidal vibration	IEC 60255-21-1	Class 1
Shock and bump	IEC 60255-21-2	Class 1
Seismic	IEC 60255-21-3	Class 1
Power magnetic immunity	IEC 61000-4-8	Level 5
Pulse magnetic immunity	IEC 61000-4-9	Level 4
Damped magnetic immunity	IEC 61000-4-10	Level 4
Voltage dip and interruption	IEC 61000-4-11	0, 40, 70, 80% dips; 250 / 300 cycle interrupts
Damped oscillatory	IEC 61000-4-12*	2.5 kV CM, 1 kV DM
Conducted RF immunity, 0 to 150 kHz	IEC 61000-4-16	Level 4
Voltage ripple	IEC 61000-4-17	15% ripple
Ingress protection	IEC 60529*	IP20 front, IP10 back
Cold	IEC 60068-2-1	–40°C for 16 hours
Hot	IEC 60068-2-2	85°C for 16 hours
Humidity	IEC 60068-2-30	6 days, variant 1
Damped oscillatory	IEEE/ANSI C37.90.1	2.5 kV, 1 MHz
RF immunity	IEEE/ANSI C37.90.2	20 V/m, 80 MHz to 1 GHz
Safety	UL 508	e83849 NKCR
		Section 43 - Temperature test Energization of Contact Inputs and/or Contact Outputs for continuous duty is not to exceed a total of 31 W of power
Safety	UL C22.2-14	e83849 NKCR7
Safety	UL 1053	e83849 NKCR
Safety	IEC 60255-27	Insulation: class 1, Pollution degree: 2, Over voltage cat II

*Not tested by third party

3.15 PRODUCTION TESTS

OPTIONS	
Thermal	Products go through an environmental test based upon an Accepted Quality Level (AQL) sampling process.

3.16 APPROVALS

Compliance	Applicable council directive	According to
CE	Low voltage directive	EN 60255-5
	EMC directive	EN 60255-26 / EN 50263
		EN 61000-6-5
C-UL-US	---	UL 508
		UL 1053
		C22.2 No. 14

3.17 MAINTENANCE

MOUNTING

Attach mounting brackets using 2.3 Nm ±0.23 Nm of torque (20 inch-pounds ±2 inch-pounds).

CLEANING

Normally, cleaning is not required. When dust has accumulated on the front panel display, wipe with a dry cloth.

Note:
To avoid deterioration of electrolytic capacitors, power up units that are stored in a de-energized state once per year, for one hour continuously

CHAPTER 4

INSTALLATION

4.1 CHAPTER OVERVIEW

This chapter contains the following sections:

Chapter Overview	68
Unpack and inspect	69
Panel cutouts	70
Rear terminal layout	79
Wiring	82
Inter-relay communications	109
Activate relay	124
Software installation	125
Add device to software	127
Connect to the relay	135
Set up CyberSentry and change default password	138
Import settings	139
Connect to substation gateway	144

4.2 UNPACK AND INSPECT

1. Open the package and check that the following items have been delivered along with the device itself:
   a. Mounting screws
   b. Certificate of Calibration
   c. Test Report
   d. EC Declaration of Conformity
   e. Front panel label package
2. Inspect the device for physical damage.
3. View the rear nameplate and verify that the correct model has been delivered. The model order code is at the top right of the nameplate.
4. For any issues, contact GE as outlined in the For Further Assistance section in chapter 1.

Instruction manuals and software are not normally delivered with the device. You will need to download all relevant documentation and software from the GE website, unless you have specifically ordered printed copies of the documentation. You will need the following:

- GE Vernova EnerVista™ software and documentation
- Instruction Manual
- UR Family Communications Guide

Note:
The instruction manual outlines how to install, configure, and use the unit.

Note:
The communications guide is for advanced use with communication protocols.

Note:
The warranty is included at the end of this instruction manual and on the GE Vernova website.

4.3 PANEL CUTOUTS

This section does not apply to the HardFiber products. Please see the dedicated instruction manual for further information.

Install the relay in an indoor environment within the environmental specifications. The relay complies with Pollution Category II, which means installation in an office, laboratory, or testing environment.

4.3.1 HORIZONTAL UNITS

The product is available as a 19-inch rack horizontal mount unit with a removable front panel. The front panel is specified as enhanced, basic, or graphical at the time of ordering. The enhanced and graphical front panels have additional user-programmable pushbuttons and LED indicators, while the basic front panel has additional user-programmable pushbuttons.

The modular design allows the relay to be upgraded and repaired by qualified service personnel. The front panel is hinged to allow access to the modules. The front panel is itself removable to allow mounting on doors with limited rear depth and for upgrading.

The enhanced horizontal front panel is also referred to as the IP54 Front Panel or Enhanced Front Panel Rev. 2. This panel uses a screw instead of a knob to close the panel. It conforms to an IP54 rating with the IP54 mounting collar purchased separately. The IP54 mounting collar can be used in panel-mount installations, not 19-inch rack-mount installations. The IP54 mounting collar cannot be used with Rev. 1 enhanced front panels.

The case dimensions are shown in the following figures, along with panel cutout details for panel mounting. When planning the location of your panel cutout, ensure that provision is made for the front panel to swing open without interference to or from adjacent equipment.

Mount the relay such that the front panel sits semi-flush with the panel or switchgear door, allowing the operator access to the keypad and the front communications port.

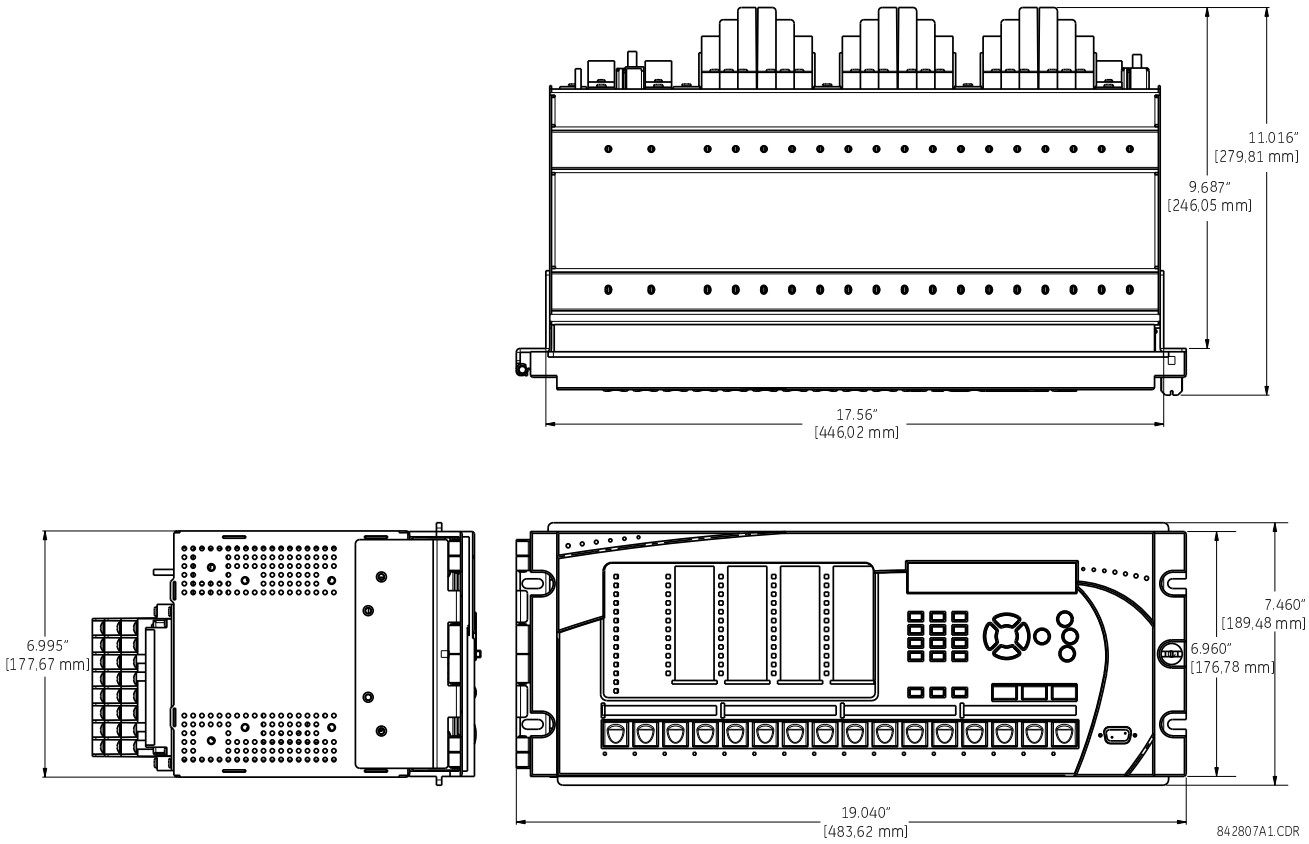

Figure 3: Horizontal dimensions (Rev. 1 enhanced front panel)

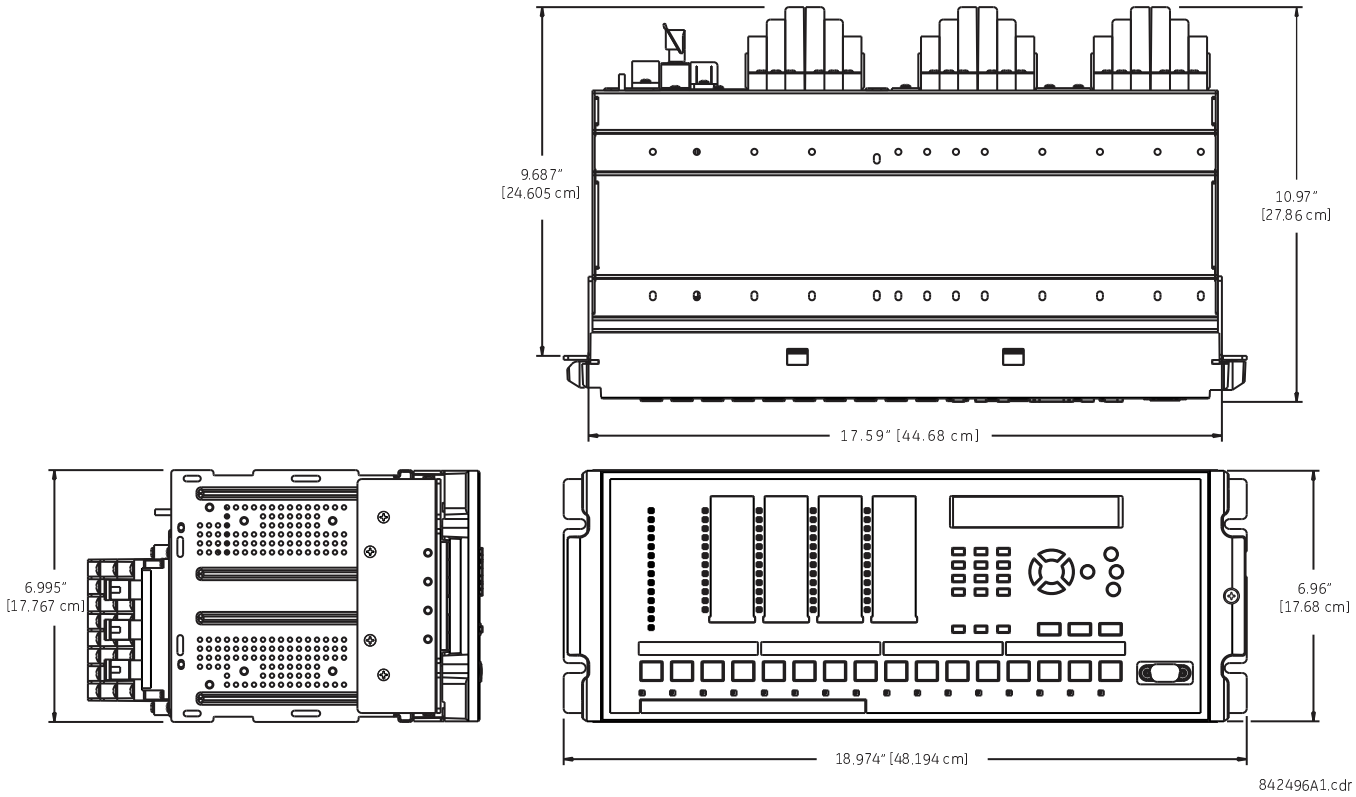

Figure 4: Horizontal dimensions (Rev. 2 enhanced front panel)

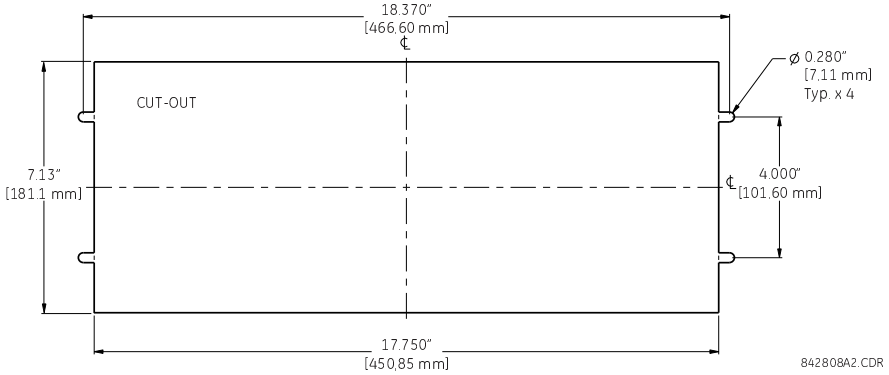

Figure 5: Horizontal mounting (enhanced and graphical front panels)

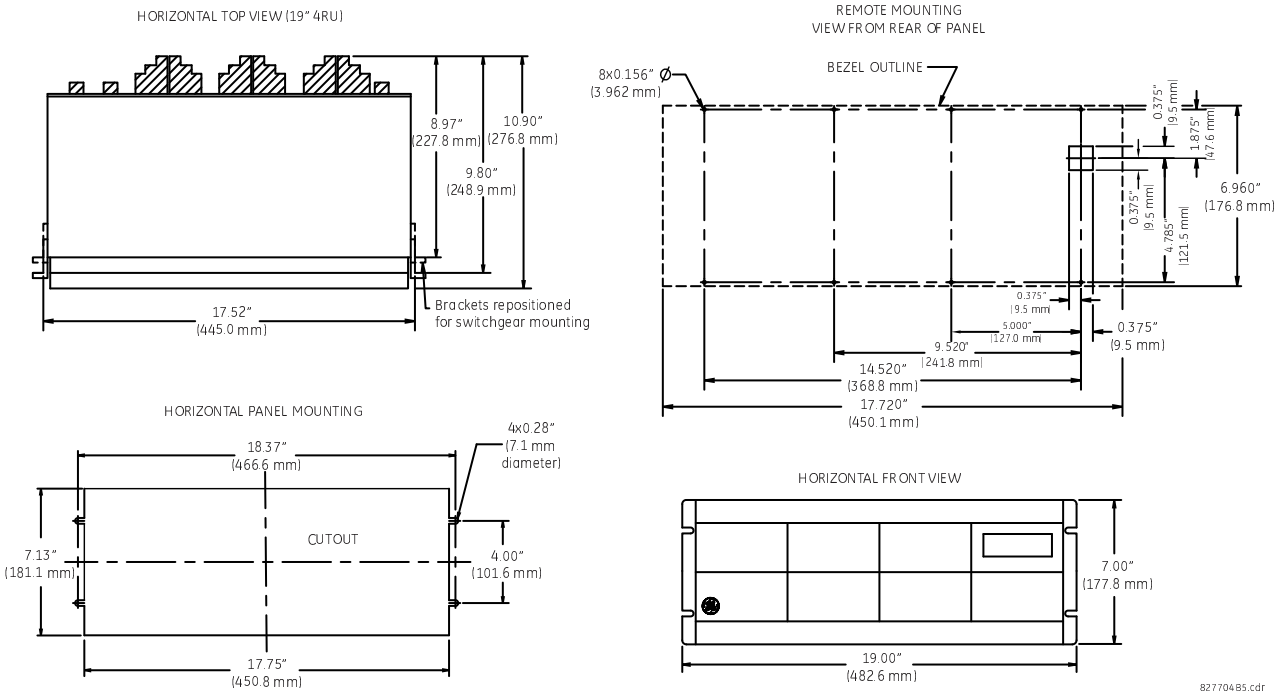

Figure 6: Horizontal dimensions and mounting (basic front panel)

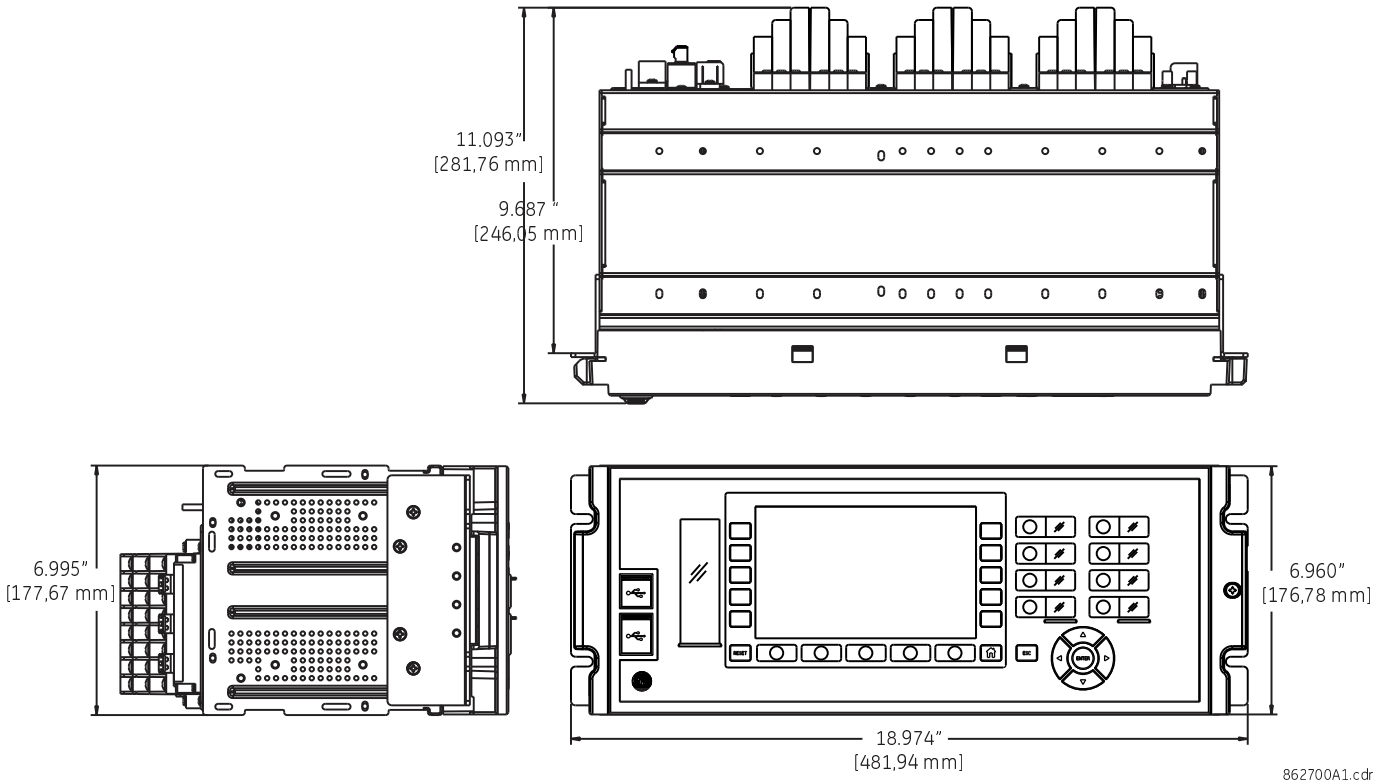

Figure 7: Horizontal dimensions (graphical front panel)

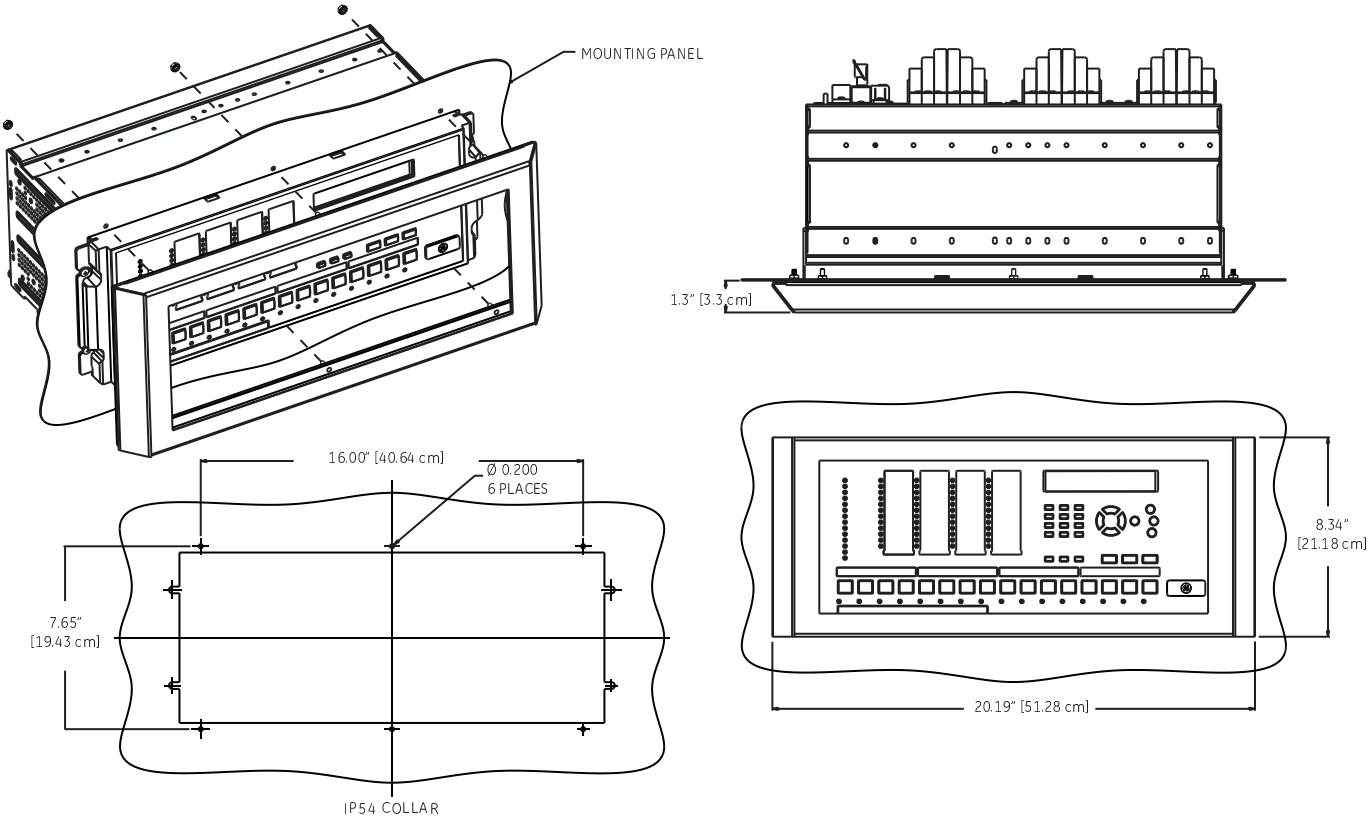

NOTES
1. INSPECT THE COLLAR BEFORE INSTALLATION, VERIFY GASKET IS ADHERED TO THE METAL ON ALL SIDES
2. MAKE SURE THE RELAY IS POSITIONED CENTER TO THE CUT OUT
3. INSTALL IP-54 COLLAR, CONFIRM THE GASKET PROPERLY MATES WITH THE PANEL ON ALL SIDES
SECURE USING #8-32 HEX NUT AT 6 PLACES.

842497A1.cdr

Figure 8: Horizontal dimensions (IP54 mounting collar)

4.3.2 VERTICAL UNITS

The relay is also available as a reduced size (¾) vertical mount unit, with a removable front panel. The front panel is specified as enhanced or basic at the time of ordering. The enhanced front panel contains additional user-programmable pushbuttons and LED indicators, while the basic front panel has additional user-programmable pushbuttons.

The modular design allows the relay to be upgraded and repaired by qualified service personnel. The front panel is hinged to allow easy access to the modules. The front panel is itself removable to allow mounting on doors with limited rear depth and for upgrading.

The case dimensions are shown in the following figures, along with panel cutout details for panel mounting. When planning the location of your panel cutout, ensure that provision is made for the front panel to swing open without interference to or from adjacent equipment.

Mount the relay such that the front panel sits semi-flush with the panel or switchgear door, allowing the operator access to the keypad and the communications port.

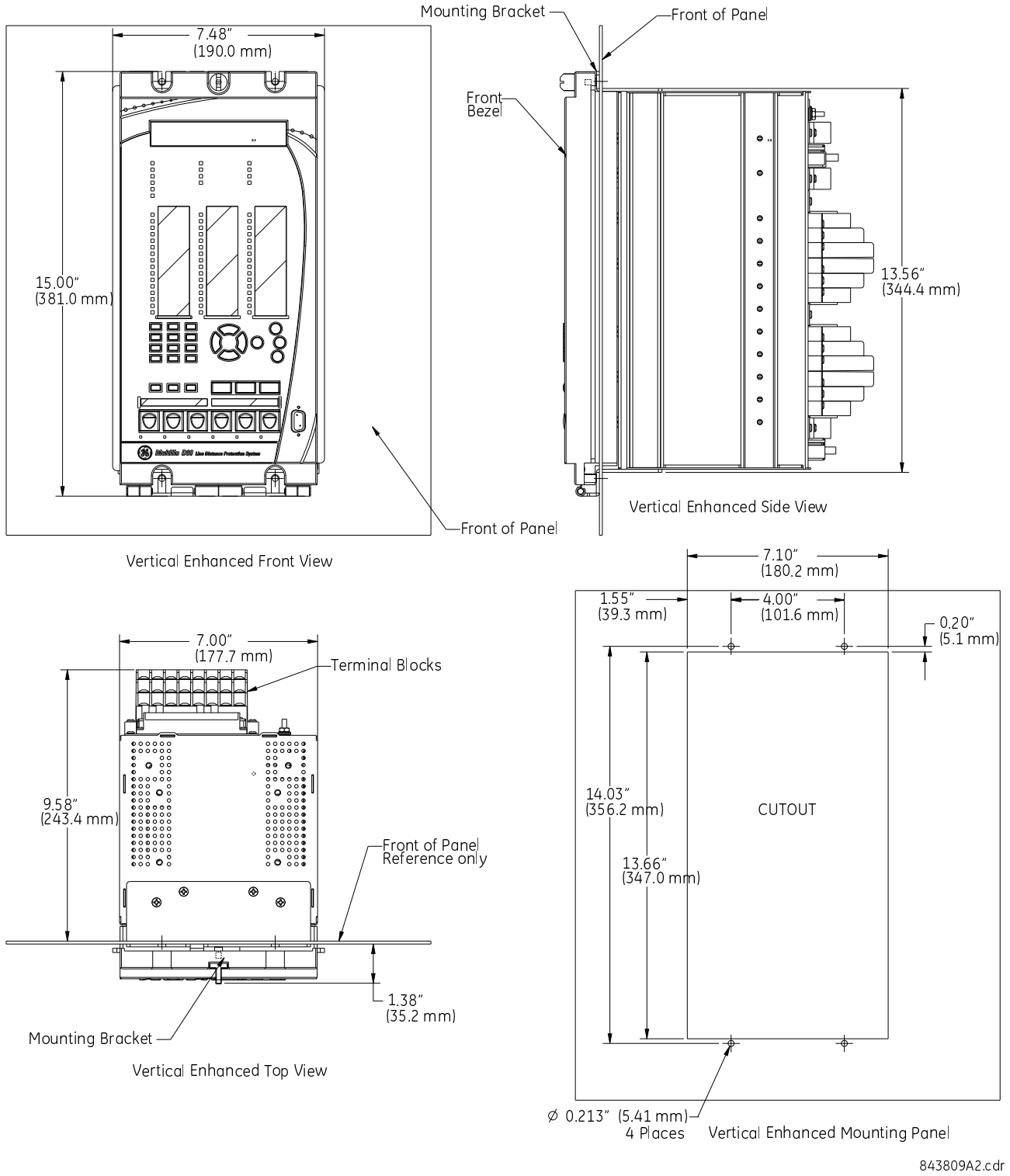

Figure 9: Vertical dimensions and mounting (enhanced front panel)

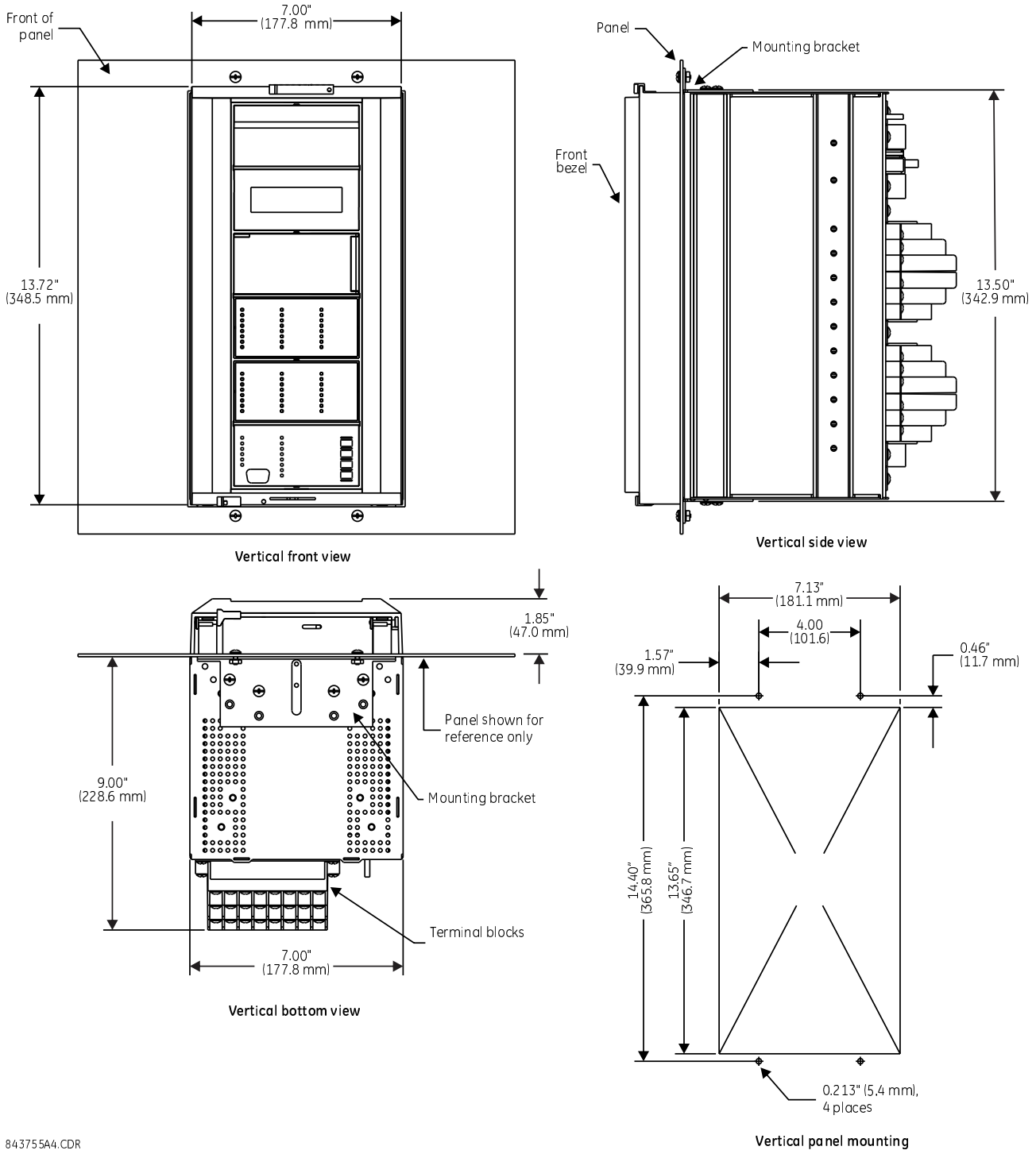

Figure 10: Vertical dimensions and mounting (basic front panel)

For side-mounting devices with the enhanced front panel, see the following documents:

- GEK-113180 — UR-Series UR-V Side-Mounting Front Panel Assembly Instructions
- GEK-113181 — Connecting a Remote UR-V Enhanced Front Panel to a Vertical UR Device Instruction Sheet
- GEK-113182 — Connecting a Remote UR-V Enhanced Front Panel to a Vertically-Mounted Horizontal UR Device Instruction Sheet

For side-mounting devices with the basic front panel, use the following figures:

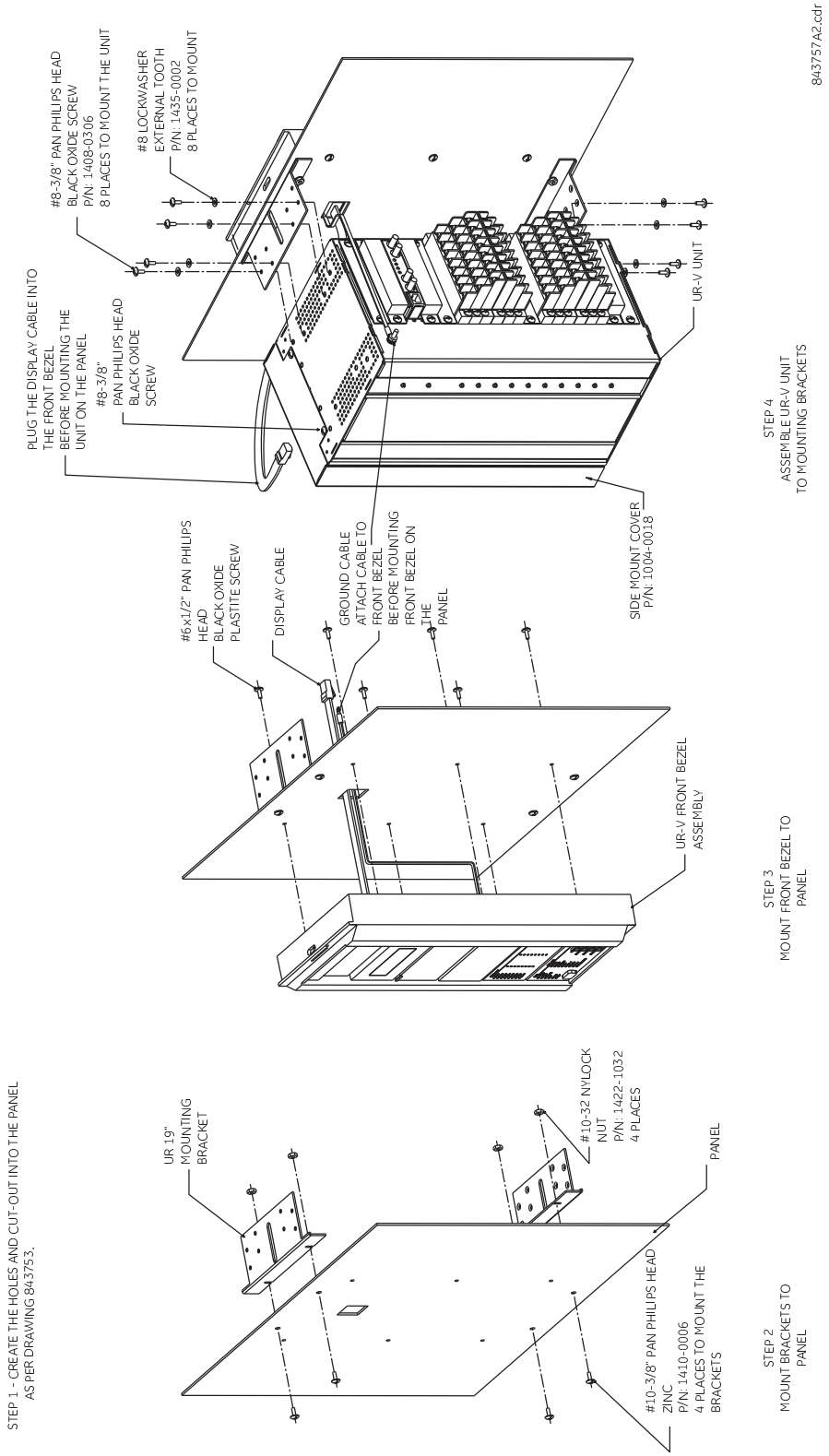

Figure 11: Vertical side-mounting installation (basic front panel)

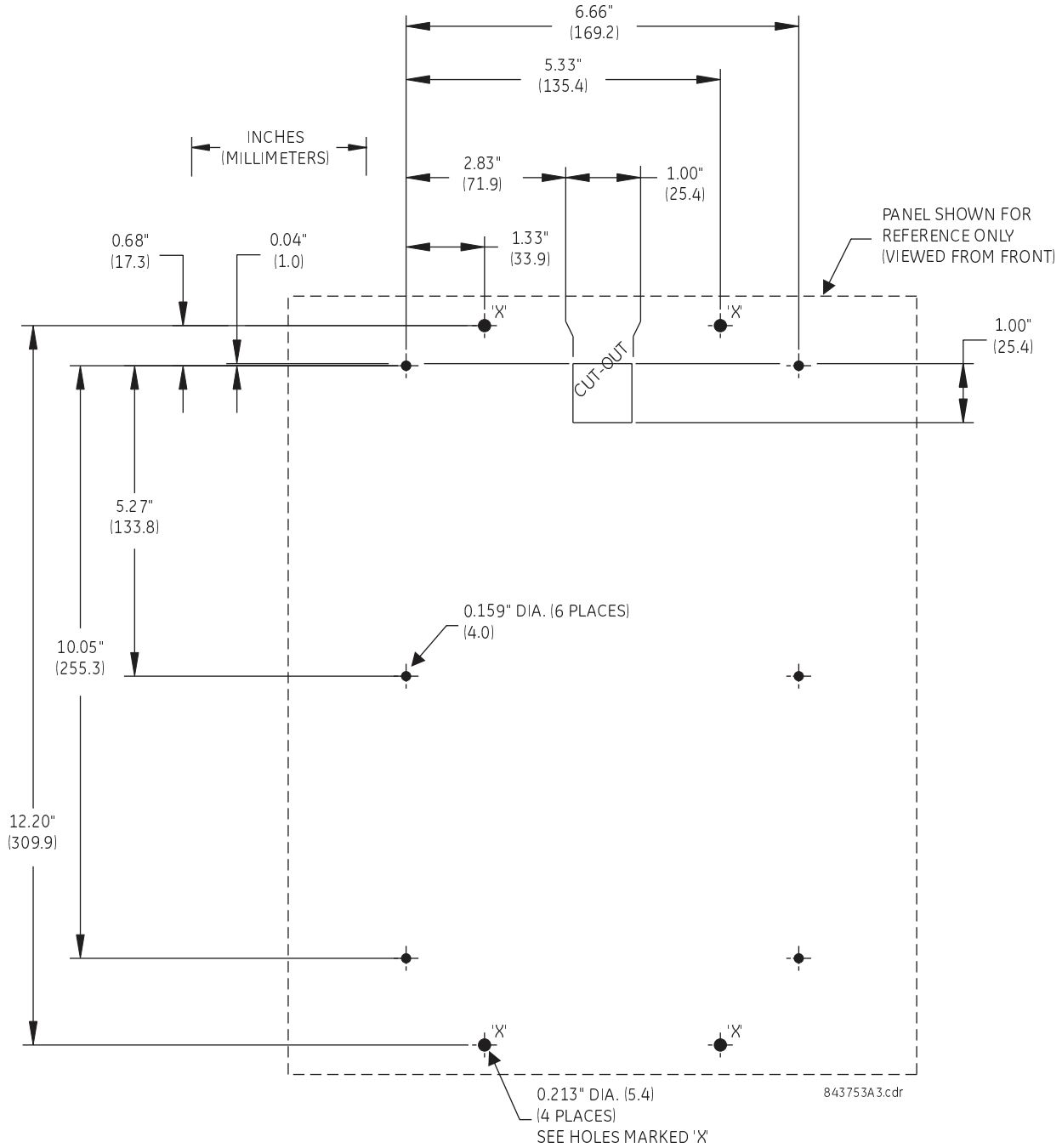

Figure 12: Vertical side-mounting rear dimensions (basic front panel)

4.4 REAR TERMINAL LAYOUT

The rear terminals depend on the order code. An example is shown here.

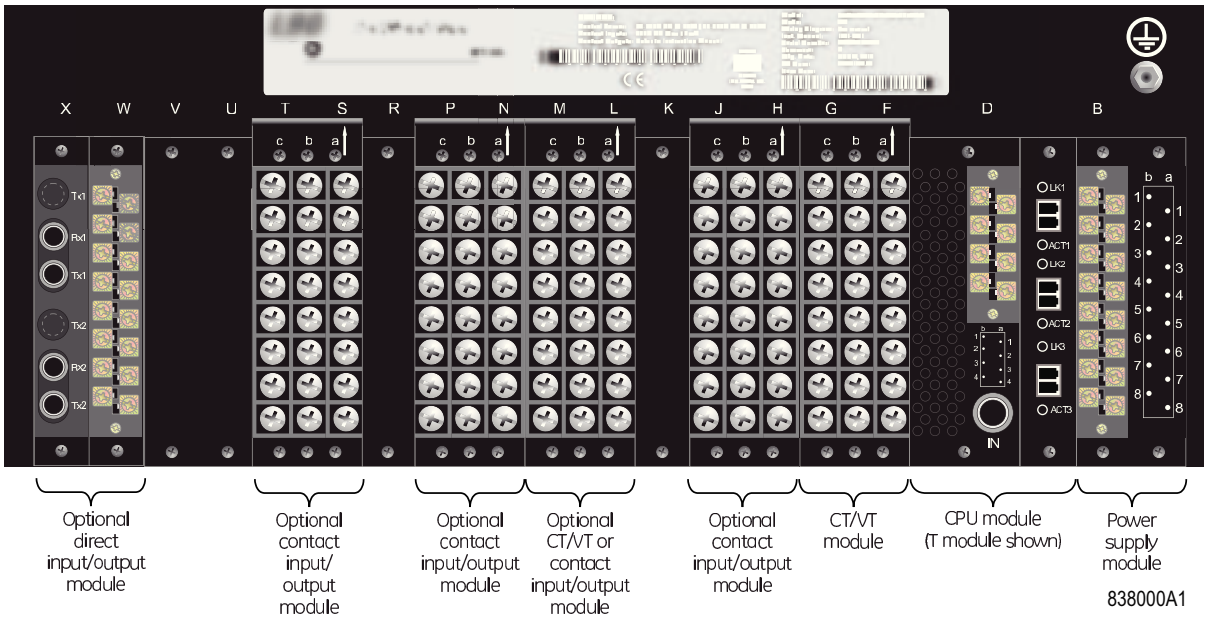

Figure 13: Example of rear panel layout

Warning:
Do not touch any rear terminals while the relay is energized, else death or serious injury can result from electrical shock.

Note:
Small form-factor pluggable ports (SFPs) are pluggable transceivers. They transmit, receive, and convert electrical signals to optical signals and vice-versa. Supplied with the device, they are inserted into the Ethernet ports on the CPU and/or Process Bus modules. A photo in the Maintenance chapter shows this plug-in device. Do not use non-validated transceivers or install validated transceivers in the wrong Ethernet slot, else damage can occur.

Note:
When using a copper SFP with a Process Bus Module, always use Shielded Twisted Pair Ethernet Cable. We ecommend limiting the length of the cable to three meters (9.8 feet) and confining it within one bay/cubicle.

Note:
When using a Process Bus Module, to view if the SFP is 100 Mbps or 1 Gbps, enter the IP address of the device in a web browser and access ***Process Card Menu > Process Card SFP Information****.*

Terminal number assignments are three characters long and assigned by module slot position, row number, and column letter. Two-slot wide modules take their slot designation from the first slot position (nearest to CPU module), indicated by an arrow on the terminal block. The figure shows an example of rear terminal assignments.

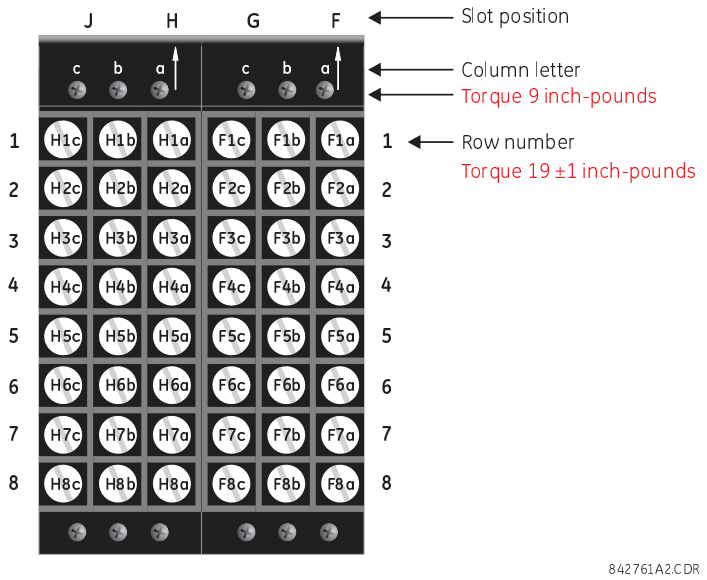

Figure 14: Example of modules in F and H slots

The torque used to connect the screws that connect the terminal blocks (top screws a, b, c) and the metal plates over empty slots to the chassis is 9 inch-pounds (1Nm). For the screws used to wire the terminal blocks (rows 1 to 8), use 19±1 inchpounds (2.1±0.1 Nm).

The CPU module type depends on order code. During manufacturing, the power supply and CPU modules are installed in slots B and D of the chassis with 13 inch-pounds (1.47 Nm) of torque on the screws at the top and bottom of the modules. Wire connections to these two modules at 13 inch-pounds (1.47 Nm).

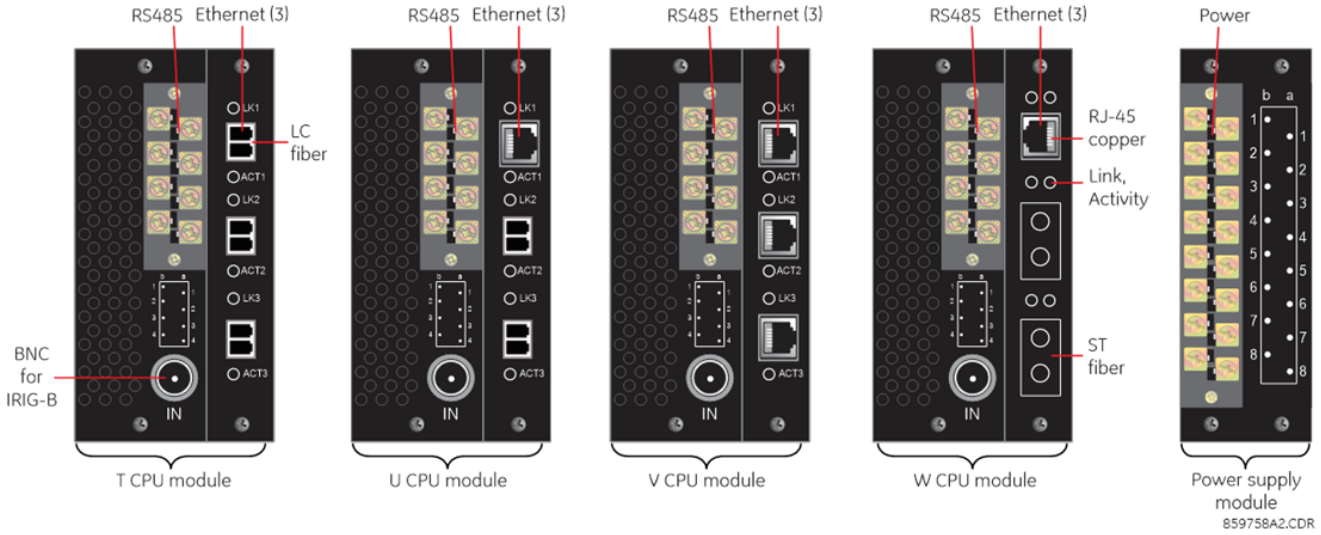

Figure 15: CPU modules and power supply

The following figure shows the optical connectors for CPU modules.

Figure 16: LC fiber connector (left) and ST fiber connector (right)

Speeds for the LC connections on non-HardFiber Process Bus Modules are as follows:

- Order code 85 — 1000Base-SX ports 1a and 1b, or ports 3a and 3b
- Order code 86 — 1000Base-SX ports 1a, 1b, 3a, 3b; 100Base-FX ports 2a, 2b, 4a, 4b
- Order code 87 — 100Base-FX ports 1a, 1b, 2a, 2b, 3a, 3b, 4a, 4b

4.5 WIRING

4.5.1 TYPICAL WIRING

For Sampled Value (SV) applications using a Process Bus Module (order code 85, 86, 87) with IRIG-B for synchronization, follow the recommended cables and grounding connections outlined here and later.

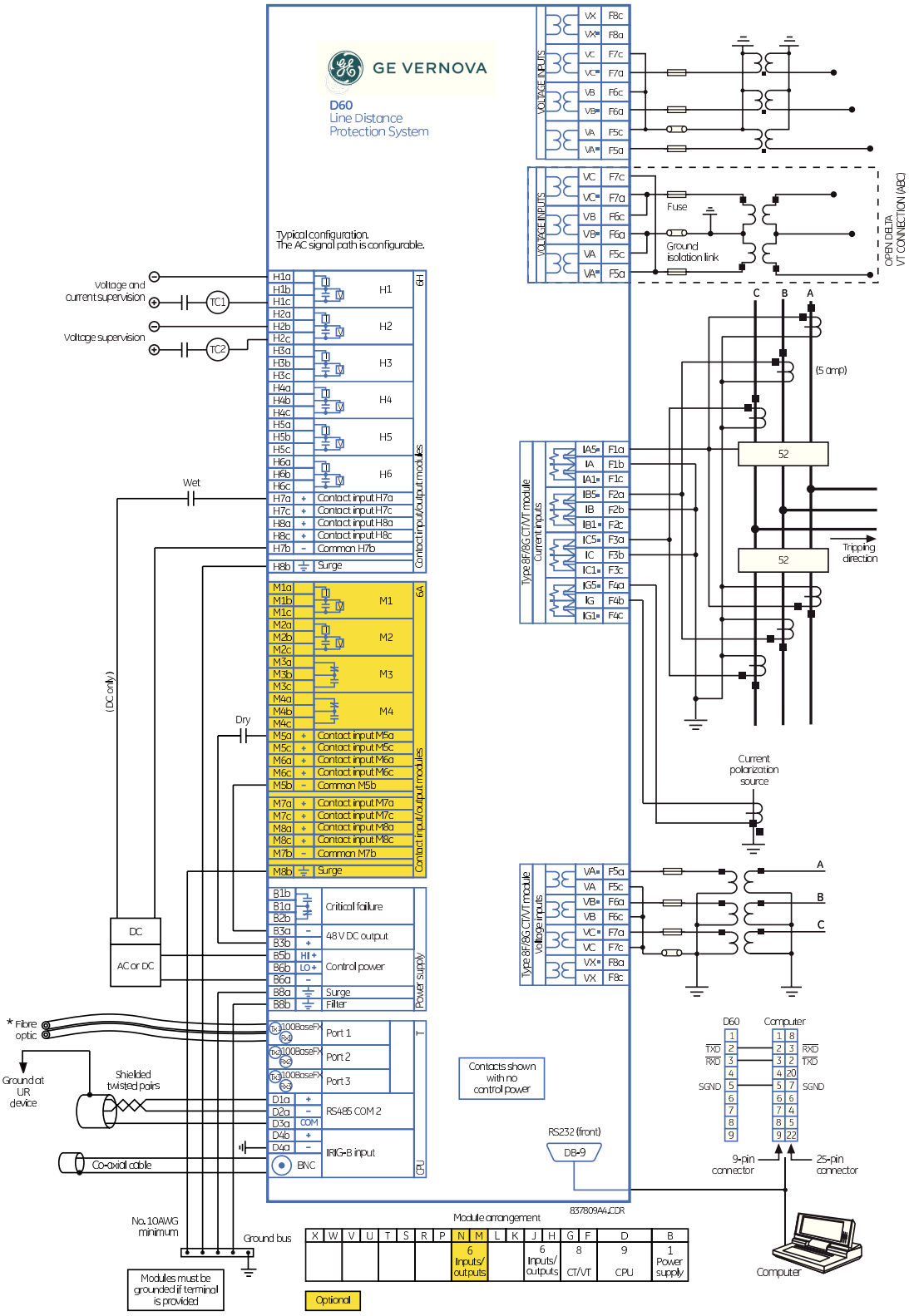

Figure 17: Typical wiring diagram (T module shown for CPU)

4.5.2 DIELECTRIC STRENGTH

Dielectric strength is the maximum electric strength that can be sustained without breakdown. It is measured in volts.

The table shows the dielectric strength of the UR-series module hardware.

Dielectric strength of UR modules

Module type	Module function	Terminals		Dielectric strength
		From	To	
1	Power supply	High (+); Low (+); (–)	Chassis	2000 V AC for 1 minute
1	Power supply	48 V DC (+) and (–)	Chassis	2000 V AC for 1 minute
1	Power supply	Relay terminals except terminals 8a and 8b	Chassis	2000 V AC for 1 minute
2	Reserved	N/A	N/A	N/A
3	Reserved	N/A	N/A	N/A
4	Digital contact inputs/outputs	All	Chassis	2000 V AC for 1 minute
5	Analog inputs/outputs	All except 8b	Chassis	< 50 V DC
6	Digital contact inputs/outputs	All	Chassis	2000 V AC for 1 minute
7	RS422	All except 6a, 7b, 8a	Chassis	< 50 V DC
8	CT/VT	All	Chassis	2000 V AC for 1 minute
9	CPU	All	Chassis	2000 V AC for 1 minute

Note:
Filter networks and transient protection clamps are used in the hardware to prevent damage caused by high peak voltage transients, radio frequency interference (RFI), and electromagnetic interference (EMI). These protective components can be damaged by application of the ANSI/IEEE C37.90 specified test voltage for longer than the specified minute.

4.5.3 CONTROL POWER

Power supplied to the relay must be connected to the matching power supply range of the relay. If incorrect voltage is applied or voltage is applied to the wrong terminals, damage can occur.

The device contains electrolytic capacitors. These capacitors are well-known to deteriorate over time if voltage is not applied periodically. Deterioration can be avoided by powering up the relay at least once a year.

The power supply module is ordered with one of two possible voltage ranges, and the device can be ordered with or without a redundant power supply module option. Each range has a dedicated input connection for proper operation. The ranges are as follows:

- Low (LO) range — 24 to 48 V (DC only) nominal
- High (HI) range — 125 to 250 V nominal

The power supply module provides power to the relay and supplies power for dry contact input connections.

The SL and SH power supply modules also provide an auxiliary 48 V DC power for dry contact input connections and a critical failure relay. The critical failure relay is a form-C device that is energized once control power is applied and the relay has successfully booted up with no critical self-test failures. If ongoing self-test diagnostic checks detect a critical failure (see the Self-Test Errors section) or control power is lost, the relay de-energizes.

Note:
The TH and TL models do not have the auxiliary 48 V DC.

Warning:
Connect all wires at the back of a UR before connecting to power, else death or serious injury can result from electrical shock.

To connect power to the relay:

1. Locate the power supply module in the first slot, slot B, on the back of the device
2. Connect the three wires to the terminals, or connect two to the terminals and the third to the ground screw. 14 gauge stranded wire with disconnect devices is recommended. Use 13 inch-pounds torque.
3. Connect all wires to the relay before turning on power.

For high-reliability systems, the device has a redundant option in which two power supplies are placed in parallel on the bus. If one of the power supplies becomes faulted, the second power supply assumes the full load of the relay without any interruptions. Each power supply has a green LED on the front of the module to indicate that it is functional. The critical fail relay of the module also indicates a faulted power supply.

An LED on the front of the control power module shows the status of the power supply, as outlined in the table.

LED indication	Power supply
Continuous on	OK
On/off cycling	Failure
Off	Failure or no power

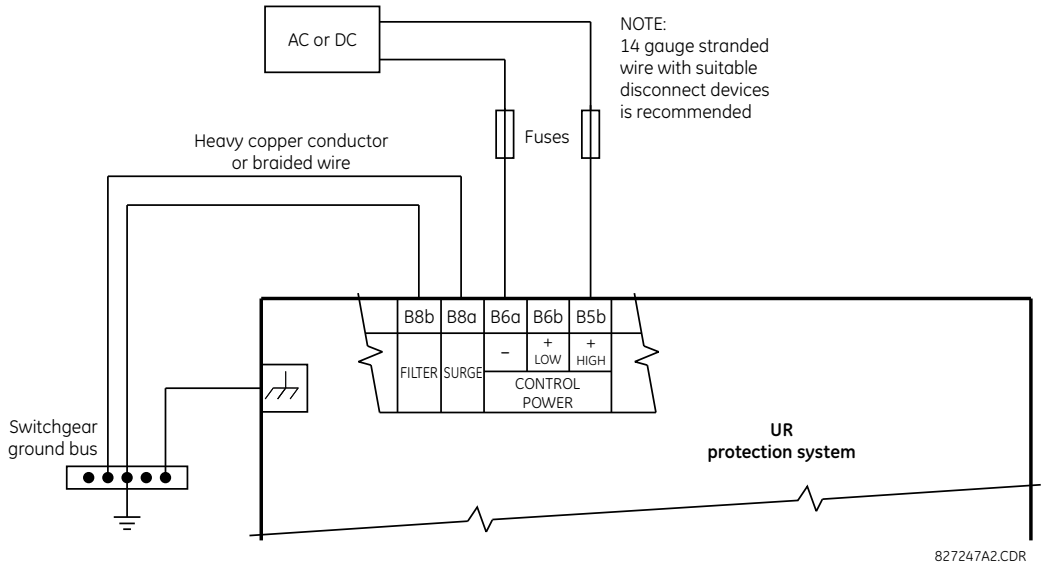

Figure 18: Control power connection

4.5.4 NON-VOLATILE DATA STORAGE

Non-volatile data is temporary data required after a power cycle for relay state, such as latch status before reboot. The relay saves this data in non-volatile storage every two minutes or when a state change occurs.

If a state change occurs just before a power down (less than two minutes) and the relay power is cycled, some temporary data can be saved and the prior state is retained at power up. Otherwise, a two-minute powered on period after a state change ensures that all temporary state changes required after reboot have been saved. A command also is available to initiate saving of data in the compact flash memory using **Commands > Relay Maintenance > Save Volatile Data**.

4.5.5 CT/VT MODULES

> *Note:*
> *Verify that the connection made to the relay terminals for nominal current of 1 A or 5 A matches the secondary rating of the connected CTs. Unmatched CTs can result in equipment damage or inadequate protection.*

The CT and VT inputs are analog current transformer and voltage transformer signals used to monitor AC power lines. The UR-series of relays support 1 A and 5 A CTs. A CT/VT module can have current or voltage inputs on channels 1 through 4 inclusive, or channels 5 through 8 inclusive. Channels 1, 2, 3 and 4 are intended for connection to phase A, B, C and another quantity respectively. The same applies for channels 5, 6, 7 and 8. Channels 4 and 8 are intended for connection to a single-phase source. For voltage inputs, these channels are labeled as auxiliary voltage (VX). For current inputs, these channels are intended for connection to a CT between system neutral and ground, and are labeled as ground current (IG).

Size 12 American Wire Gauge (AWG) is commonly used to connect to the module; the maximum size is 10 AWG.

CT/VT modules can be ordered with a standard ground current input that is the same as the phase current input. Each AC current input has an isolating transformer and an automatic shorting mechanism that shorts the input when the module is withdrawn from the chassis. There are no internal ground connections on the current inputs. Current transformers with 1 to 50000 A primaries and 1 A or 5 A secondaries can be used.

For some UR models, CT/VT modules with a sensitive ground input are also available. The ground CT input of the sensitive ground modules is 10 times more sensitive than the ground CT input of standard CT/VT modules. However, the phase CT inputs and phase VT inputs are the same as those of regular CT/VT modules.

CT/VT modules have enhanced diagnostics, which can automatically detect hardware failure and take the relay out of service. CT connections for both ABC and ACB phase rotations are identical, as shown in the Typical Wiring Diagram.

The phase voltage channels are used for most metering and protection purposes. The auxiliary voltage channel is used as input for the synchrocheck and volts-per-hertz features, which are optional features for some UR models.

When using a zero-sequence core balance CT to detect ground fault current, its placement is shown as follows. You should use twisted-pair cabling on a zero-sequence CT.

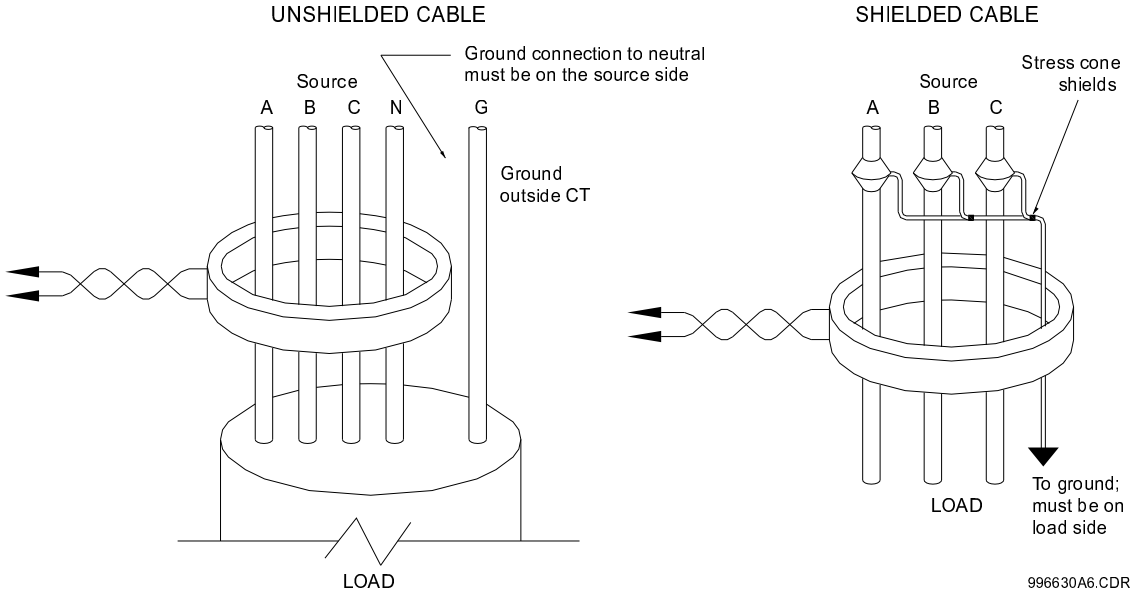

Figure 19: Zero-sequence core balance CT installation

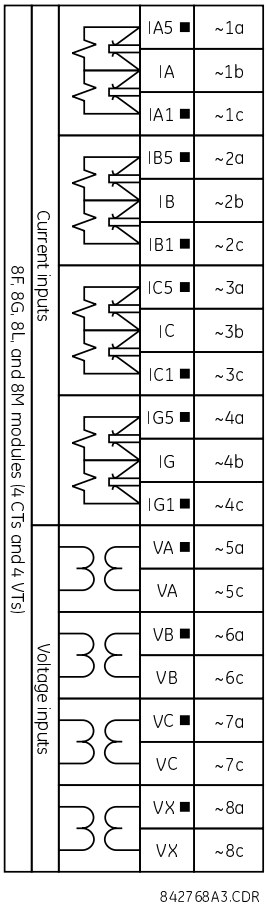

Figure 20: CT/VT module wiring

> *Note:*
> *The tilda sign (~) represents the slot position, because this will be different for different configurations.*

4.5.6 PROCESS BUS MODULE FOR HARDFIBER

The relay can be ordered with a process bus interface module to interface with the HardFiber Process Bus System, or HardFiber Brick, allowing bidirectional IEC 61850 fiber-optic communications with up to eight HardFiber Bricks. The HardFiber system integrates seamlessly with the existing UR-series applications, including protection functions, FlexLogic, metering, and communications.

This process bus system offers the following benefits:

- Reduces labor associated with design, installation, and testing of protection and control applications using the UR by reducing the number of individual copper terminations
- Integrates seamlessly with existing UR applications, since the IEC 61850 process bus interface module replaces the traditional CT/VT modules
- Communicates using open standard IEC 61850 messaging

For details on the HardFiber system, see its Instruction Manual.

4.5.7 CONTACT INPUTS AND OUTPUTS

With the exception of the high density modules, which have 36 terminal connections, all contact input/output modules have 24 terminal connections. The connections are arranged typically as three terminals per row, with eight rows in total. A given row of three terminals can be used for the outputs of one relay. For example, for form-C

relay outputs, the terminals connect to the normally open (NO), normally closed (NC), and common contacts of the relay. For a form-A output, there are options of using current or voltage detection for feature supervision, depending on the module ordered. The terminal configuration for contact inputs is different for the two applications.

The contact inputs are grouped with a common return. The input/output modules have three versions of grouping: four inputs per common return, five inputs per common return on a high-density module (6W and 6X), and two inputs per common return. When a contact input/output module is ordered, four inputs per common is used. If the inputs must be isolated per row, then two inputs per common return are selected (4D module). If the space limitation in the relay requires use of a high density input module (6W), five inputs share one common return and the module has six banks of inputs.

A high density I/O module (6Y) is available with two inputs sharing one common return. This module has six groups of two inputs i.e., a total of twelve contact inputs.

This module also provides station battery DC voltage measurement through two contact inputs: Contact Input 9 (x13a) and Contact Input 11 (x16a). The measured DC voltage value is available as a Flex-Analog and as an Actual Value. The positive terminal of the station battery should be connected directly to the Contact Input 9 or 11, and the negative terminal should be connected to the common return.

A Single setting ***STATION BATTERY NOM VOLTAGE*** is provided for Contact Inputs 9 and 11 to convert the measured DC voltage to pu values, for the use by the FlexElement. If the setting ***STATION BATTERY NOM VOLTAGE*** is set to 0V then the station battery voltage measurement functionality is not available. In this case, contact inputs 9 and 11 can be used as regular contact inputs with their ON and OFF operands evaluated based on the setting ***Ips x13a,x15a,x16a,x18a THRESHOLD***. For more detail see the Contact Inputs section in the Settings Chapter.

The tables and diagrams that follow illustrate the module types and contact arrangements, which can be ordered for the relay. Since an entire row is used for a single contact output, the name is assigned using the module slot position and row number. However, since there are two contact inputs per row, these names are assigned by module slot position, row number, and column position.

Some form-A / solid-state relay outputs include circuits to monitor the DC voltage across the output contact when it is open, and the DC current through the output contact when it is closed. Each of the monitors contains a level detector whose output is set to logic ON = 1 when the current in the circuit is above the threshold setting. The voltage monitor is set to ON = 1 when there is a voltage across the open contact. The detector allows a current of about 1 to 2.5 mA except for the 6Y module type outputs, which allow 2mA. The current monitor is set to ON = 1 when the current flowing through the closed contact exceeds about 80 to 100 mA. The voltage monitor is intended to check the health of the overall trip circuit. The current monitor can be used to seal-in the output contact until an external contact has interrupted current flow. If enabled, the current monitoring can be used as a seal-in signal to ensure that the form-A contact does not attempt to break the energized inductive coil circuit and weld the output contacts.

Block diagrams are shown as follows for form-A and solid-state relay outputs with optional voltage monitor, optional current monitor, and with no monitoring. The actual values shown for contact output 1 are the same for all contact outputs. With the exception of the 6Y module type, Form-A contact output with or without a current or voltage monitoring option is not polarity sensitive. For the 6Y module type, polarity must be followed to properly monitor the voltage.

The polarity shown in the figure is required for solid-state contact output connection.

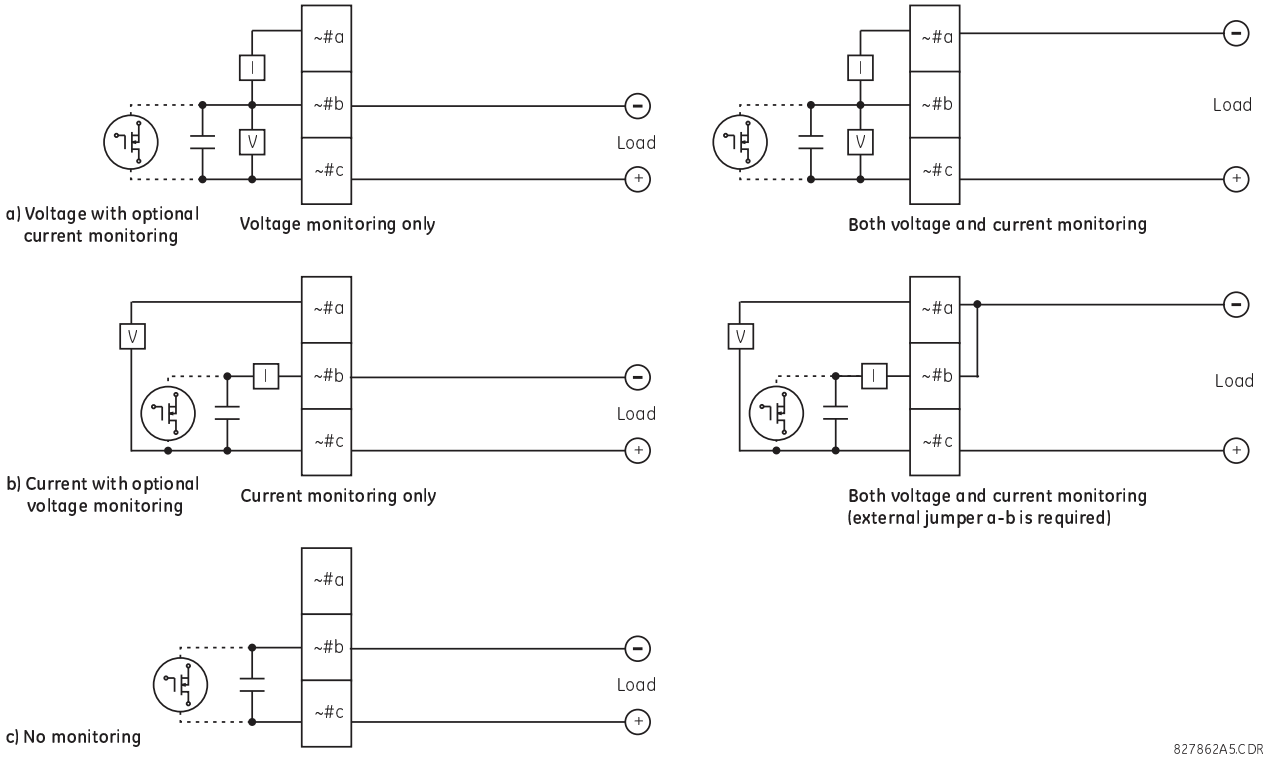

Figure 21: Form-A and solid-state contact outputs with voltage and current monitoring

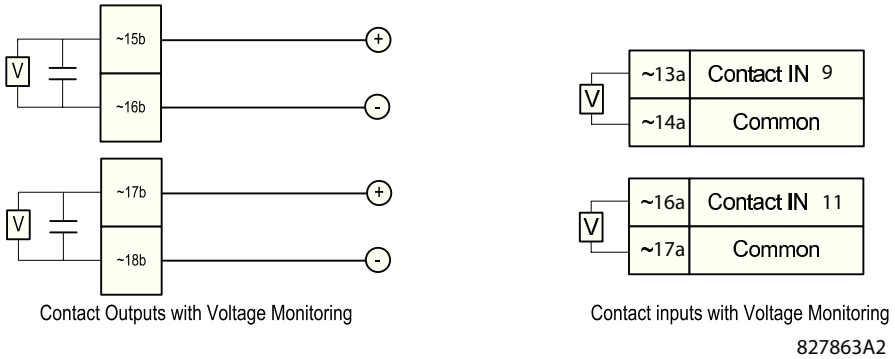

Figure 22: 6Y I/O module contact inputs and outputs

The operation of voltage and current monitors is reflected with the corresponding FlexLogic operands (CONT OP # VON, CONT OP # VOFF, and CONT OP # ION) that can be used in protection, control, and alarm logic. The typical application of the voltage monitor is breaker trip circuit integrity monitoring; a typical application of the current monitor is seal-in of the control command.

See the Digital Elements section of chapter 5 for an example of how form-A and solid-state relay contacts can be applied for breaker trip circuit integrity monitoring.

Warning:
Consider relay contacts unsafe to touch when the unit is energized. Death or serious injury can result from touching live relay contacts.

USE OF FORM-A AND SOLID-STATE RELAY OUTPUTS IN HIGH-IMPEDANCE CIRCUITS

For form-A and solid-state relay output contacts internally equipped with a voltage measuring circuit across the contact, the circuit has an impedance that can cause a problem when used in conjunction with external high-input impedance monitoring equipment, such as modern relay test set trigger circuits. These monitoring circuits can continue to read the form-A contact as being closed after it has closed and subsequently opened, when measured as an impedance.

The solution is to use the voltage measuring trigger input of the relay test set, and connect the form-A contact through a voltage-dropping resistor to a DC voltage source. If the 48 V DC output of the power supply is used as a source, a 500 Ω, 10 W resistor is appropriate. In this configuration, the voltage across either the form-A contact or the resistor can be used to monitor the state of the output.

Note:
Where a tilde "~" symbol appears, substitute the slot position of the module. Where a number sign "#" appears, substitute the contact number.

When current monitoring is used to seal-in the form-A and solid-state relay contact outputs, give the FlexLogic operand driving the contact output a reset delay of 10 ms to prevent damage of the output contact (in situations when the element initiating the contact output is bouncing, at values in the region of the pickup value).

For high-density input/output modules 6W, 6X and 6Y, use the following guidelines to connect. The new I/O modules use pin type terminal blocks instead of the current ring type. The new terminals are required to achieve higher I/O count per module.

- 12 to 24 AWG (3.3 mm2 to 0.2 mm2), single wire termination
- 16 to 24 AWG (1.31 mm2 to 0.2 mm2), multiple wire termination with matching wire sizes and stranding. Two wires maximum per circuit
- Suggested wiring screw tightening torque is a minimum 4.43 in-lb (0.5 Nm) and maximum 5.31 in-lb (0.6 Nm)
- Minimum suggested temperature rating for the conductors is 75°C
- Wire type: copper

For module types 67, 6A, 6B, 6C, 6D, 6E, 6F, 6G, 6H, 6K, 6L, 6M, 6N, 6P, 6R, 6S, 6T, 6U, 6V, 4A, 4B, 4C, 4D, and 4L, use the following guidelines to connect:

- 12 to 24 AWG (3.3 mm2 to 0.2 mm2)
- Wiring screw tightening torque is 19 inch-pounds, (2.15 Nm)
- Minimum suggested temperature rating for the conductors is 75°C
- Wire type: copper

4.5.7.1 CONTACT INPUT AND OUTPUT MODULE ASSIGNMENTS

~4A module		~4B module		~4C module		~4D module	
Terminal assignment	Output or input	Terminal assignment	Output or input	Terminal assignment	Output	Terminal assignment	Output
~1	Not Used	~1	Not Used	~1	Not Used	~1a, ~1c	2 Inputs
~2	Solid-State	~2	Solid-State	~2	Solid-State	~2a, ~2c	2 Inputs
~3	Not Used	~3	Not Used	~3	Not Used	~3a, ~3c	2 Inputs
~4	Solid-State	~4	Solid-State	~4	Solid-State	~4a, ~4c	2 Inputs
~5	Not Used	~5	Not Used	~5	Not Used	~5a, ~5c	2 Inputs
~6	Solid-State	~6	Solid-State	~6	Solid-State	~6a, ~6c	2 Inputs
~7	Not Used	~7	Not Used	~7	Not Used	~7a, ~7c	2 Inputs
~8	Solid-State	~8	Solid-State	~8	Solid-State	~8a, ~8c	2 Inputs

~4L module	
Terminal assignment	Output or input
~1	2 Outputs
~2	2 Outputs
~3	2 Outputs
~4	2 Outputs
~5	2 Outputs
~6	2 Outputs
~7	2 Outputs
~8	Not Used

67 module	
Terminal assignment	Output or input
~1	Form-A
~2	Form-A
~3	Form-A
~4	Form-A
~5	Form-A
~6	Form-A
~7	Form-A
~8	Form-A

~6A module	
Terminal assignment	Output or input
~1	Form-A
~2	Form-A
~3	Form-C
~4	Form-C
~5a, ~5c	2 Inputs
~6a, ~6c	2 Inputs
~7a, ~7c	2 Inputs
~8a, ~8c	2 Inputs

~6B module	
Terminal assignment	Output or input
~1	Form-A
~2	Form-A
~3	Form-C
~4	Form-C
~5	Form-C
~6	Form-C
~7a, ~7c	2 Inputs
~8a, ~8c	2 Inputs

~6C module	
Terminal assignment	Output
~1	Form-C
~2	Form-C
~3	Form-C
~4	Form-C
~5	Form-C
~6	Form-C
~7	Form-C
~8	Form-C

~6D module	
Terminal assignment	Output
~1a, ~1c	2 Inputs
~2a, ~2c	2 Inputs
~3a, ~3c	2 Inputs
~4a, ~4c	2 Inputs
~5a, ~5c	2 Inputs
~6a, ~6c	2 Inputs
~7a, ~7c	2 Inputs
~8a, ~8c	2 Inputs

~6E module	
Terminal assignment	Output or input
~1	Form-C
~2	Form-C
~3	Form-C
~4	Form-C
~5a, ~5c	2 Inputs
~6a, ~6c	2 Inputs
~7a, ~7c	2 Inputs
~8a, ~8c	2 Inputs

~6F module	
Terminal assignment	Output
~1	Fast Form-C
~2	Fast Form-C
~3	Fast Form-C
~4	Fast Form-C
~5	Fast Form-C
~6	Fast Form-C
~7	Fast Form-C
~8	Fast Form-C

~6G module	
Terminal assignment	Output or input
~1	Form-A
~2	Form-A
~3	Form-A
~4	Form-A
~5a, ~5c	2 Inputs
~6a, ~6c	2 Inputs
~7a, ~7c	2 Inputs
~8a, ~8c	2 Inputs

~6H module	
Terminal assignment	Output or input
~1	Form-A
~2	Form-A
~3	Form-A
~4	Form-A
~5	Form-A
~6	Form-A
~7a, ~7c	2 Inputs
~8a, ~8c	2 Inputs

~6K module	
Terminal assignment	Output
~1	Form-C
~2	Form-C
~3	Form-C
~4	Form-C
~5	Fast Form-C
~6	Fast Form-C
~7	Fast Form-C
~8	Fast Form-C

~6L module	
Terminal assignment	Output or input
~1	Form-A
~2	Form-A
~3	Form-C
~4	Form-C
~5a, ~5c	2 Inputs
~6a, ~6c	2 Inputs
~7a, ~7c	2 Inputs
~8a, ~8c	2 Inputs

~6M module	
Terminal assignment	Output or input
~1	Form-A
~2	Form-A

~6N module	
Terminal assignment	Output or input
~1	Form-A
~2	Form-A

~6P module	
Terminal assignment	Output or input
~1	Form-A
~2	Form-A

~6R module	
Terminal assignment	Output or input
~1	Form-A
~2	Form-A

~6M module	
Terminal assignment	Output or input
~3	Form-C
~4	Form-C
~5	Form-C
~6	Form-C
~7a, ~7c	2 Inputs
~8a, ~8c	2 Inputs

~6N module	
Terminal assignment	Output or input
~3	Form-A
~4	Form-A
~5a, ~5c	2 Inputs
~6a, ~6c	2 Inputs
~7a, ~7c	2 Inputs
~8a, ~8c	2 Inputs

~6P module	
Terminal assignment	Output or input
~3	Form-A
~4	Form-A
~5	Form-A
~6	Form-A
~7a, ~7c	2 Inputs
~8a, ~8c	2 Inputs

~6R module	
Terminal assignment	Output or input
~3	Form-C
~4	Form-C
~5a, ~5c	2 Inputs
~6a, ~6c	2 Inputs
~7a, ~7c	2 Inputs
~8a, ~8c	2 Inputs

~6S module	
Terminal assignment	Output or input
~1	Form-A
~2	Form-A
~3	Form-C
~4	Form-C
~5	Form-C
~6	Form-C
~7a, ~7c	2 Inputs
~8a, ~8c	2 Inputs

~6T module	
Terminal assignment	Output or input
~1	Form-A
~2	Form-A
~3	Form-A
~4	Form-A
~5a, ~5c	2 Inputs
~6a, ~6c	2 Inputs
~7a, ~7c	2 Inputs
~8a, ~8c	2 Inputs

~6U module	
Terminal assignment	Output
~1	Form-A
~2	Form-A
~3	Form-A
~4	Form-A
~5	Form-A
~6	Form-A
~7a, ~7c	2 Inputs
~8a, ~8c	2 Inputs

~6V module	
Terminal assignment	Output
~1	Form-A
~2	Form-A
~3	Form-C
~4	2 Outputs
~5a, ~5c	2 Inputs
~6a, ~6c	2 Inputs
~7a, ~7c	2 Inputs
~8a, ~8c	2 Inputs

~6W module	
Terminal assignment	Output or input
~1a	Input
~2a	Input
~3a	Input
~4a	Input
~5a	Input
~7a	Input
~8a	Input
~9a	Input
~10a	Input
~11a	Input
~13a	Input
~14a	Input
~15a	Input
~16a	Input
~17a	Input
~1b	Input
~2b	Input

~6X module	
Terminal assignment	Output or input
~1a, ~2a	Form-A
~3a, ~4a	Form-A
~5a, ~6a	Form-A
~7a, ~8a	Form-A
~9a, ~10a	Form-A
~11a, ~12a	Form-A
~13a, ~14a	Form-A
~15a, ~16a	Form-A
~17a, ~18a	Form-A
~1b, ~2b	Form-A
~3b, ~4b	Form-A
~5b, ~6b	Form-A
~7b, ~8b	Form-A
~9b, ~10b	Form-A
~11b, ~12b	Form-A
~13b, ~14b	Form-A
~15b, ~16b	Form-A

~6Y module	
Terminal assignment	Output or input
~1a	Input
~3a	Input
~4a	Input
~6a	Input
~7a	Input
~9a	Input
~10a	Input
~12a	Input
~13a	Input
~15a	Input
~16a	Input
~18a	Input
~1b, ~3b	Form-A
~2b, ~3b	Form-A
~4b, ~6b	Form-A
~5b, ~6b	Form-A
~7b, ~9b	Form-A

~6W module		~6X module		~6Y module	
Terminal assignment	**Output or input**	**Terminal assignment**	**Output or input**	**Terminal assignment**	**Output or input**
~3b	Input	~17b, ~18b	Form-A	~8b, ~9b	Form-A
~4b	Input			~10b, ~12b	Form-A
~5b	Input			~11b, ~12b	Form-A
~7b	Input			~13b, ~14b	Form-A
~8b	Input			~15b, ~16b	Form-A
~9b	Input			~17b, ~18b	Form-A
~10b	Input				
~11b	Input				
~13b	Input				
~14b	Input				
~15b	Input				
~16b	Input				
~17b	Input				

4.5.7.2 CONTACT INPUT AND OUTPUT MODULE WIRING

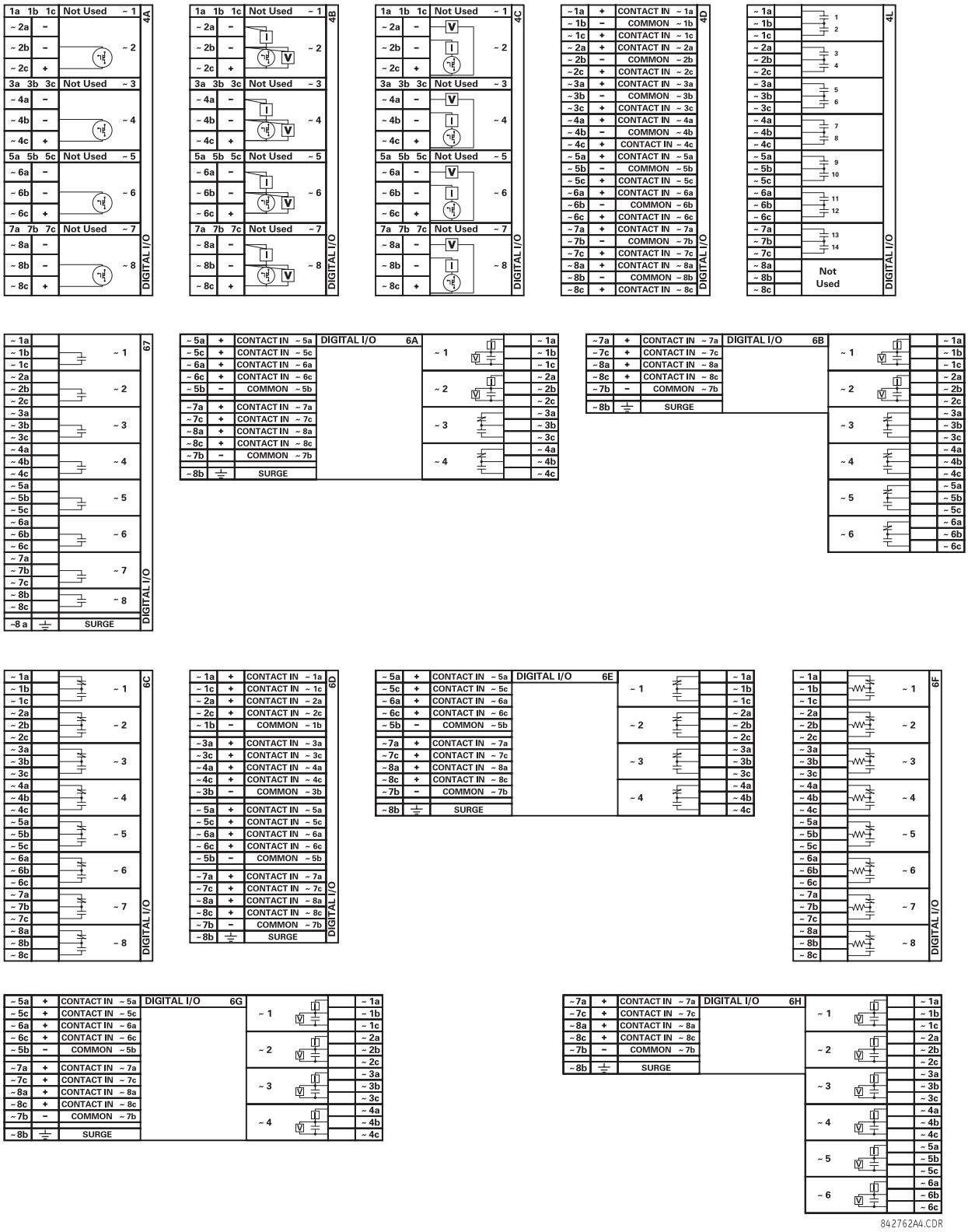

Figure 23: Contact input and output module wiring (Sheet 1 of 3)

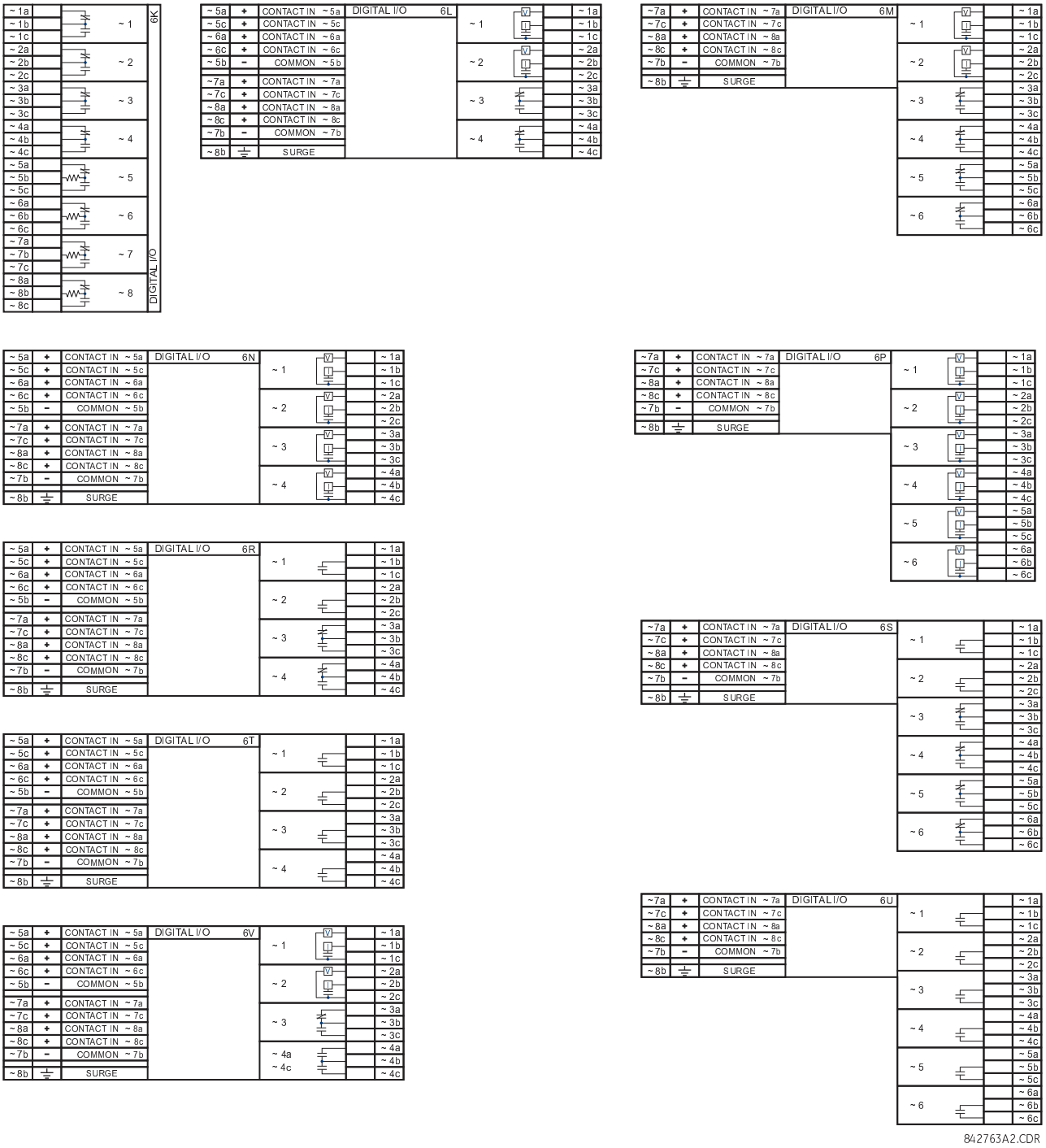

Figure 24: Contact input and output module wiring (Sheet 2 of 3)

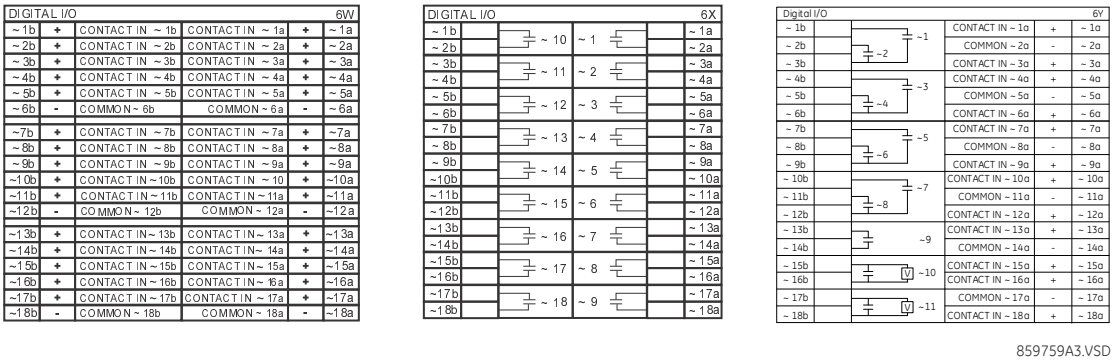

Figure 25: Contact input and output module wiring (Sheet 3 of 3)

> *Note:*
> *Observe the polarity shown in the figures for all contact input and output connections.*

4.5.7.3 CONTACT INPUTS

A dry contact has one side connected to terminal B3b. This is the positive 48 V DC voltage rail supplied by the power supply module. The other side of the dry contact is connected to the required contact input terminal. Each contact input group has its own common (negative) terminal that must be connected to the DC negative terminal (B3a) of the power supply module. When a dry contact closes, a current of 1 to 3 mA flows through the associated circuit.

A wet contact has one side connected to the positive terminal of an external DC power supply. The other side of this contact is connected to the required contact input terminal. If a wet contact is used, then the negative side of the external source must be connected to the relay common (negative) terminal of each contact group. The maximum external source voltage for this arrangement is 300 V DC.

The voltage threshold at which each group of four contact inputs detects a closed contact input is programmable as 17 V DC for 24 V sources, 33 V DC for 48 V sources, 84 V DC for 110 to 125 V sources, and 166 V DC for 250 V sources.

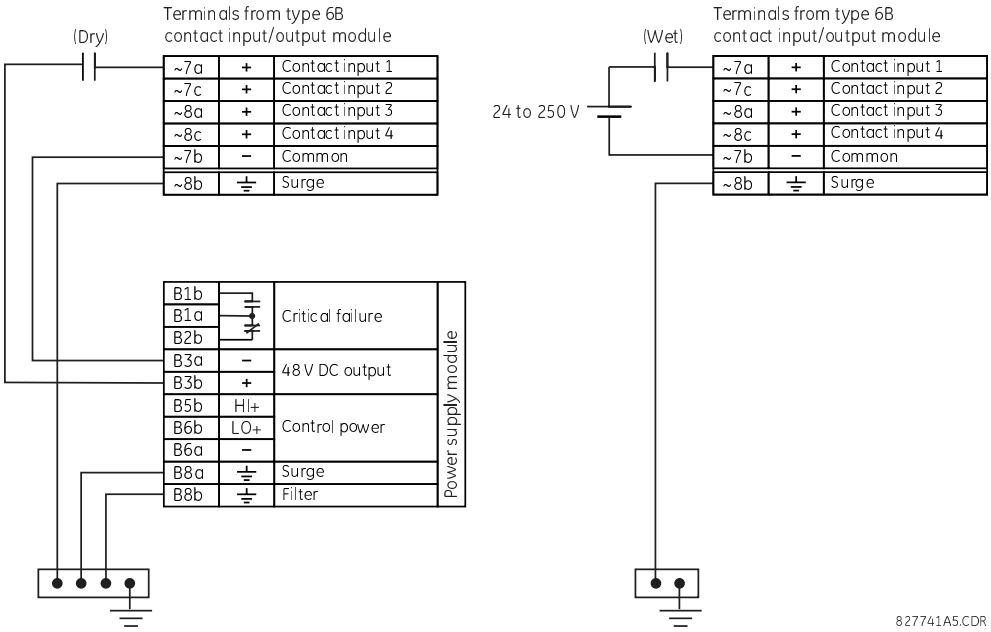

Figure 26: Dry and wet contact input connections

Note:
Where a tilde "~" symbol appears, substitute the slot position of the module

Note:
There is no provision in the relay to detect a DC ground fault on 48 V DC control power external output. We recommend using an external DC supply.

4.5.7.4 GENERAL APPLICATION CONSIDERATIONS

Contacts outputs of protective relays, auxiliary contacts from breakers, disconnectors and other devices are connected generally to contacts inputs of protective relays. In some situations, the contact outputs of some protective relays can have high impedance connected across it. When such a contact output is connected across a relay contact input, it can spuriously operate the relay input even when the output is open, if there is a substantial distributed capacitance (represented by C1) present in the wiring between the output and the relay input, and the debounce time setting in the relay is low enough. This false assertion of the contact input, when there is inadvertent ground present at the DC positive terminal, can be prevented by inserting a resistor across the input.

The following figure shows a typical DC circuit, with battery ground detection, of contact input. The contact output has parallel impedance across it (represented by R1).

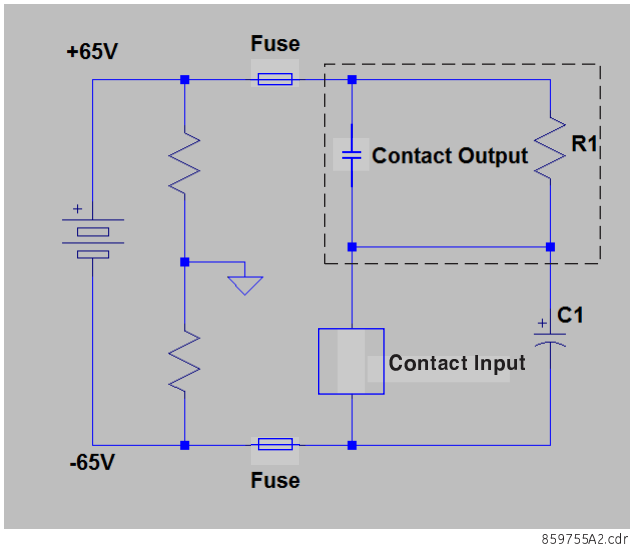

Figure 27: Typical contact input DC circuit

The presence of the impedance path (R1) across the contact output allows the stray (distributed) capacitance C1 to charge as shown, thus developing a voltage across the contact input enough to momentarily operate the input while the capacitance discharges in the presence of DC ground on the positive terminal of the battery.

The duration of the discharge depends on the value of the distributed capacitance, the initial voltage of the distributed capacitance, and the input impedance of the contact input. If the duration is greater than the debounce time setting, then the contact input operates.

The application example that follows describes how to mitigate this issue by connecting a resistor across the contact input, as shown in the next figure, or by adjusting the debounce time setting to a value greater than the discharge time to prevent spurious operation of the contact input only if the voltage (with output open) across the contact input due to trickle current is less than the threshold voltage. This operation of contact inputs also can be prevented by using the Auto-Burnish contact inputs or contact inputs with active impedance.

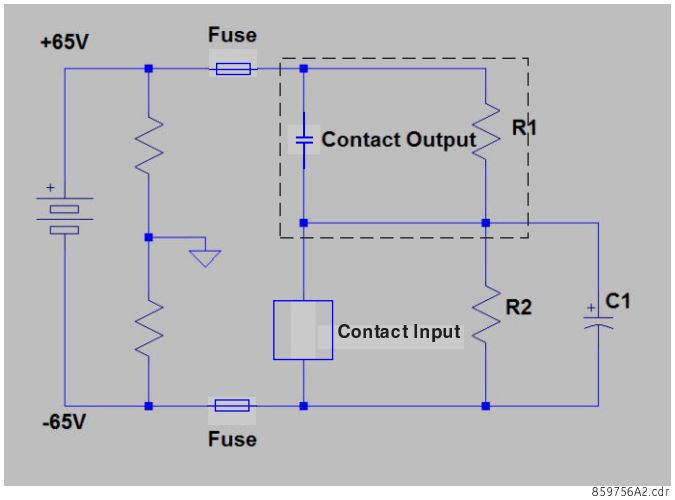

Figure 28: Contact input connected to a contact output with resistor (R2) across the input

Application example

This example is for illustrative purposes only and the calculations present the worst-case scenario. In practice, the value of debounce time can be lower.

Contact input ON state impedance used in the calculation of the discharge period is based on the following table.

Battery voltage (V)	Input impedance (kΩ)
130	50
250	97

Assumptions:

- Debounce time setting = 2 ms
- Stray capacitance = 0.1 µF.
- Initial voltage across the stray capacitance "Vinitial" = 19 V (Vthreshold - 65 V), where Vthreshold = 84 V. The initial voltage Vinitial depends on values of impedance of R1 and contact inputs when the contact input is OFF (non-activated state).

Therefore, the discharge time constant (τ) = $50\ k\Omega * 0.1\ \mu F = 5\ ms$.

The discharge period t is calculated from the following equation:

$$Vthreshold = (Vbatt - VInitial) * e^{(-t/\tau)}$$

$$84 = -149 * e^{(t/0.005)}$$

$$T = -0.005 * \ln(84/149) = 0.0029\ s$$

Therefore, in this example the contact inputs operate.

To prevent this operation, the debounce time must be increased to 4 ms (set debounce time as per the following table) or insert a resistor less than or equal to "R" as calculated later.

Stray capacitance (µF)	Battery voltage (V)	Debounce time (ms)
0.05	130	2
0.1	130	4
0.2	130	4
0.05	250	3

Stray capacitance (µF)	Battery voltage (V)	Debounce time (ms)
0.1	250	6*
0.2	250	11

* Default debounce time on contact inputs is 6 ms

The value of this resistor "R" is calculated as follows:

1. Determine the minimum voltage (V threshold) required to turn on the input. This is determined by direct measurement or referenced in the input specifications.
2. Calculate the resistance necessary to limit the voltage to 1/3 V threshold (when the contact is OFF, the non-activated state) as follows:

   R = (Vthreshold / 3) / (2 mA)

   The 2 mA current is used in case the contact input is connected across the GE Form A contact output with voltage monitoring. Otherwise use the amperage of the active circuit connected to the contact input when its contact output is open and the voltage across the contact input is third trigger threshold to calculate the resistor value.
3. When the contact is ON (operate state), the battery voltage appears across the resistor. The wattage rating of the resistor is then:

   PR = 1.3 * (Vbatt) ^2 / R Watts
4. Applying the following equation to our example:

   R = 84 V / 3 * (1 / 2 mA) = 14 kΩ

   PR = 1.57 Watts Eq. 3-4
5. Calculating the voltage across the contact input with the Burden Resistor, Voltage across the contact Input:

   Vresistor = 2 mA * 14 Kohm = 28 V

   Vresistor < contact input threshold (84 V)

In conclusion, in this example, the contact input does NOT operate falsely with the Burden Resistor across its input AND when a battery ground is present.

4.5.7.5 USE OF CONTACT INPUTS WITH AUTO-BURNISHING

The contact inputs sense a change of state of the external device contact based on the measured current. When external devices are located in a harsh industrial environment (either outdoor or indoor), their contacts can be exposed to various types of contamination. Normally, there is a thin film of insulating sulfidation, oxidation, or contaminates on the surface of the contacts, sometimes making it difficult or impossible to detect a change of state. This film must be removed to establish circuit continuity — an impulse of higher than normal current can accomplish this.

The contact inputs with auto-burnish create a high current impulse when the threshold is reached to burn off this oxidation layer as a maintenance to the contacts. Afterwards the contact input current is reduced to a steady-state current. The impulse has a five-second delay after a contact input changes state.

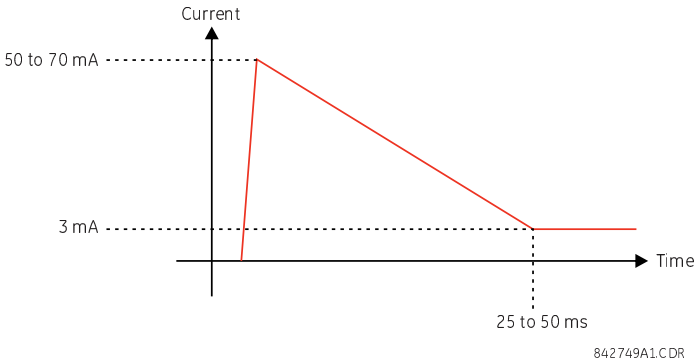

Figure 29: Current through contact inputs with auto-burnishing

Regular contact inputs limit current to less than 3 mA to reduce station battery burden. In contrast, contact inputs with auto-burnishing allow currents up to 50 to 70 mA at the first instance when the change of state is sensed. Then, within 25 to 50 ms, this current is slowly reduced to 3 mA as indicated. The 50 to 70 mA peak current burns any film on the contacts, allowing for proper sensing of state changes. If the external device contact is bouncing, the auto-burnishing starts when external device contact bouncing is over.

Another important difference between the auto-burnishing input module and the regular input modules is that only two contact inputs have common ground, as opposed to four contact inputs sharing one common ground (see the Contact Input and Output Module Wiring diagrams). This is beneficial when connecting contact inputs to separate voltage sources. Consequently, the threshold voltage setting is also defined per group of two contact inputs.

The auto-burnish feature can be disabled or enabled using the DIP switches found on each daughter card. There is a DIP switch for each contact, for a total of 16 inputs.

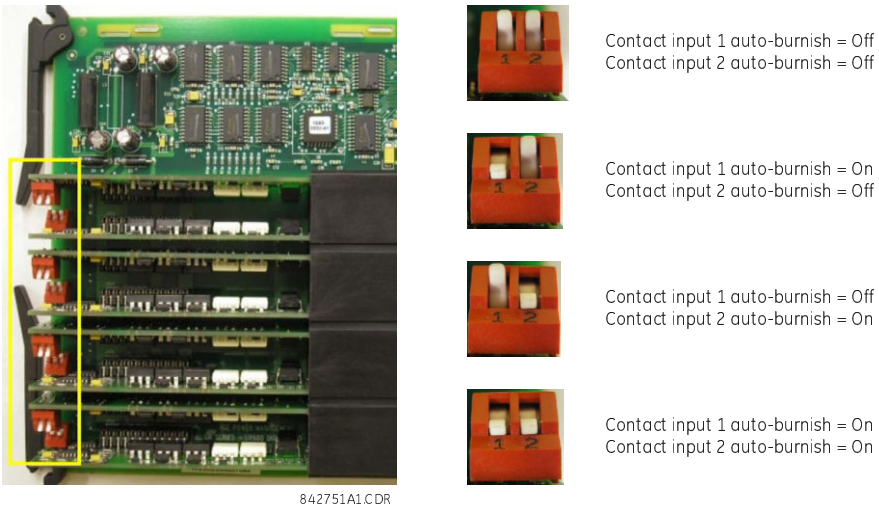

Figure 30: Auto-burnish DIP switches

The auto-burnish circuitry has an internal fuse for safety purposes. During regular maintenance, check the auto-burnish functionality using an oscilloscope.

4.5.7.6 USE OF CONTACT INPUTS WITH ACTIVE IMPEDANCE

Contact inputs can be susceptible to parasitic capacitance, caused by long cable runs affected by switching surges from external circuits. This can result in inadvertent activation of contact inputs with the external contact open. In this case, GE recommends using the contact I/O module with active impedance circuit.

Active impedance contact input can tolerate external cable capacitance of up to 0.2 µF, without entering the ON state for more than 2 ms. The contact input debounce time can still be set above 2 ms for added security to prevent contact input activations caused by external transient ON states.

An active impedance contact input is normally in Low impedance mode during OFF contact state (non-activated condition). During Low impedance state, contact input impedance is maintained at 10 K Ohms impedance to allow fast discharge of the stray capacitance of the long cables.

When the contact input voltage exceeds the set threshold, active impedance maintains 10 K Ohms impedance. If voltage starts rapidly decreasing, this indicates that stray capacitance is being discharged through the contact input. If, however, voltage stabilizes above the set threshold, the input impedance is switched to High impedance mode of 100 K Ohms. This value reduces the input current to <3 mA, and contact input switches to the ON state (operated state).

The figure shows the active impedance contact input V-I characteristic. Different thresholds with their corresponding characteristics are shown by color. The contact input is in the ON (operated) state if the input voltage is to the right of the colored threshold band (+/-10% tolerance), and the contact input is in the OFF (non-activated) state when input voltage is to the left of the band. A contact input is in LOW state during non-operated system condition, and actively switches to HIGH state upon detection of input voltage above the settable threshold.

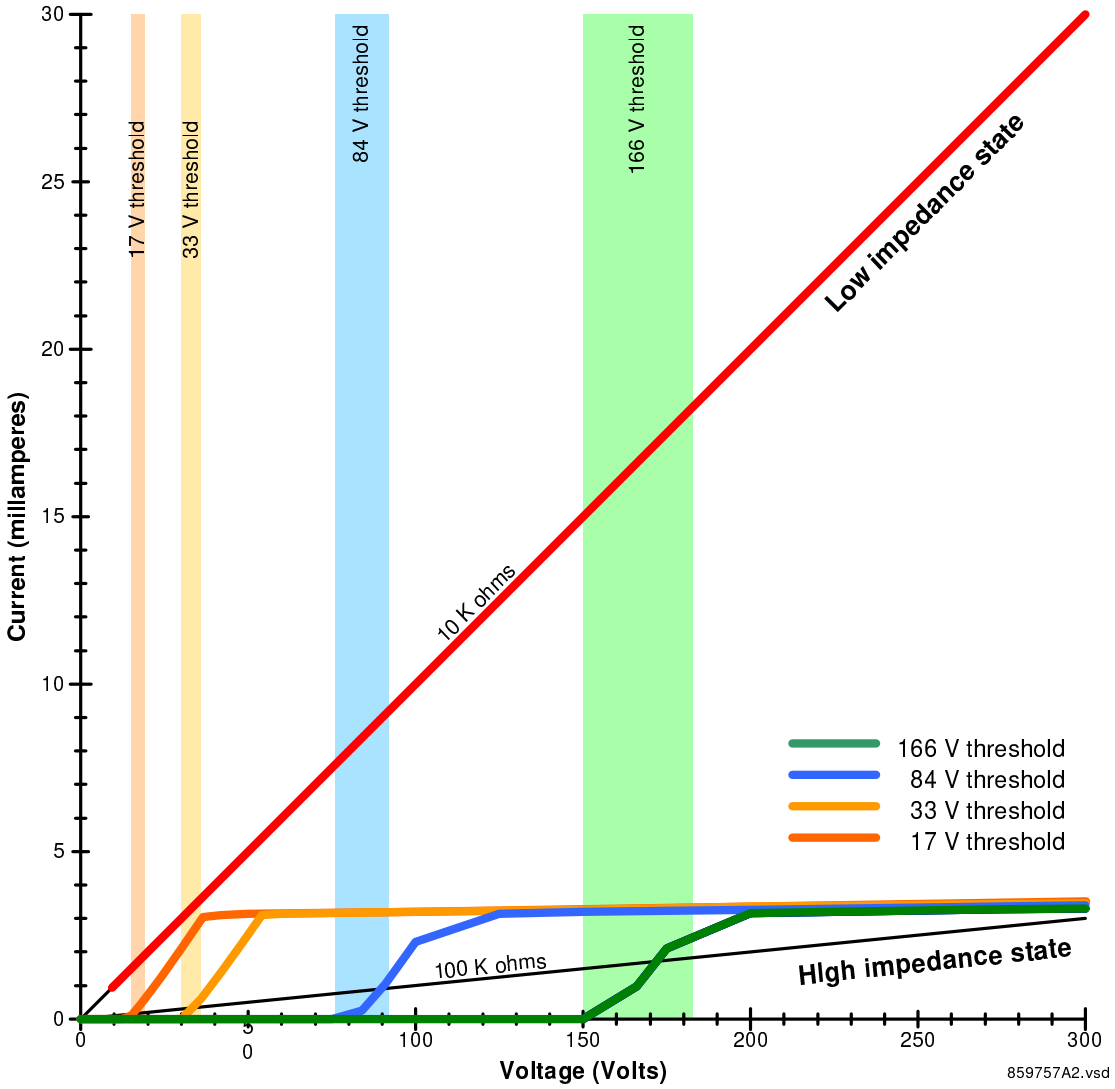

Figure 31: Active impedance contact input V-I characteristic

4.5.8 TRANSDUCER INPUTS AND OUTPUTS

Transducer input modules receive input signals from external DCmA output transducers (DCmA In) or resistance temperature detectors (RTDs). Hardware and software are provided to receive signals from these external transducers and convert these signals into a digital format for use as required.

Transducer output modules provide DC current outputs in several standard DCmA ranges. Software is provided to configure virtually any analog quantity used in the relay to drive the analog outputs.

Each transducer input/output module has 24 terminal connections. These connections are arranged as three terminals per row over eight rows. A given row can be used for either inputs or outputs, with terminals in column "a" having positive polarity and terminals in column "c" having negative polarity. Since an entire row is used for a single input/output channel, the name of the channel is assigned using the module slot position and row number.

Each module also requires that a connection from an external ground bus be made to terminal 8b. The current outputs require a twisted-pair shielded cable, where the shield is grounded at one end only. The following figure illustrates the transducer module types (5A, 5C, 5D, 5E, and 5F) and channel arrangements that can be ordered for the relay.

> *Note:*
> *Where a tilde "~" symbol appears, substitute the slot position of the module.*

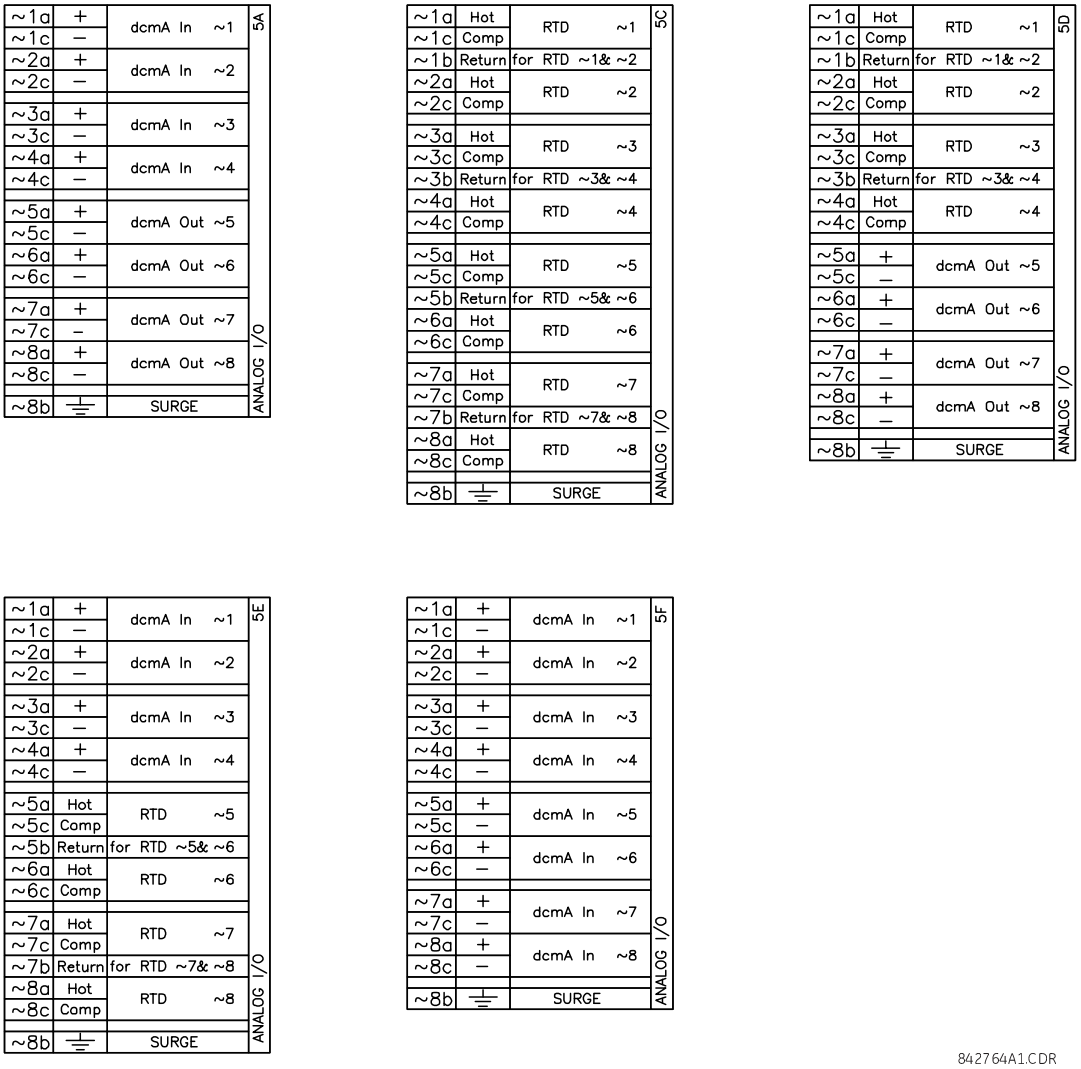

Figure 32: Transducer input/output module wiring

The following figure show how to connect RTDs.

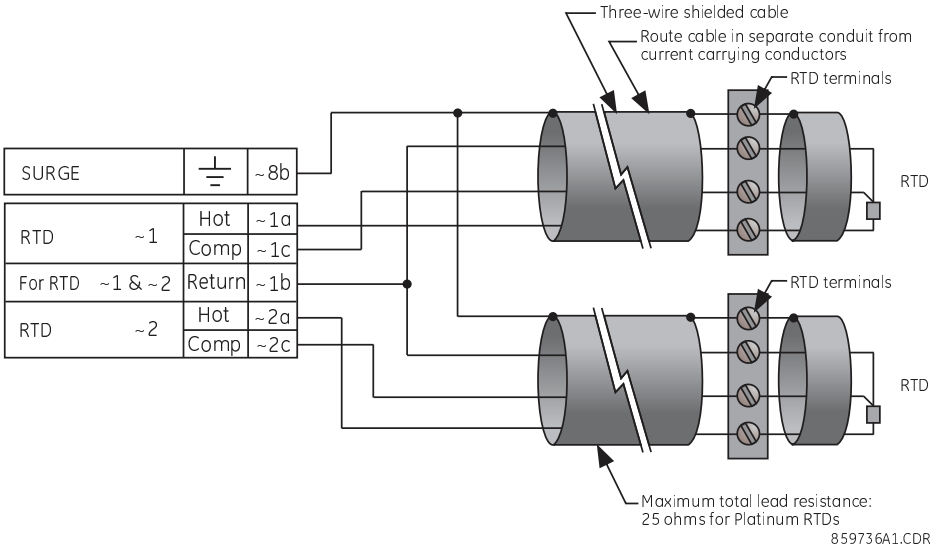

Figure 33: RTD connections

4.5.9 COMMUNICATION PORTS

4.5.9.1 GENERAL GROUNDING CONSIDERATIONS

When using RJ45 Copper connection the cable must be shielded twisted pair Ethernet cable.

If not using a Process Bus Module (order code 85, 86, 87), the following cable and ground connection is appropriate.

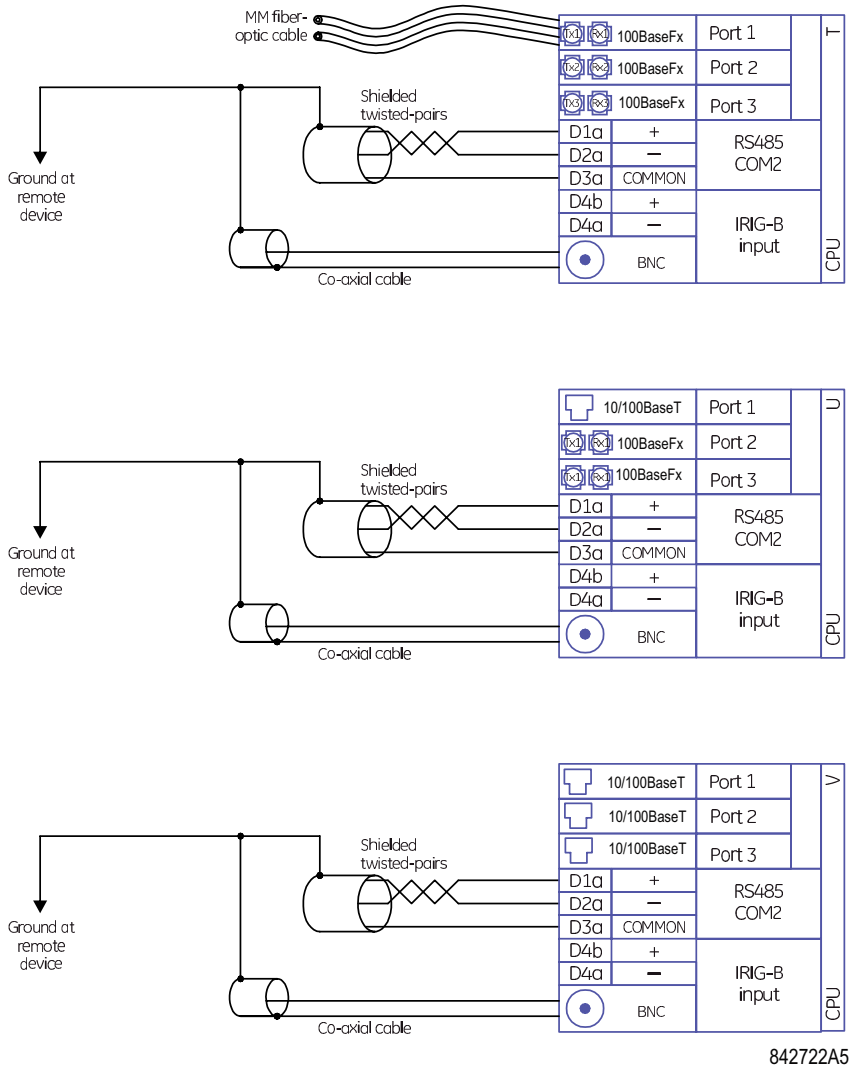

Figure 34: CPU module wiring for IRIG-B without Process Bus Module

For Sampled Value (SV) applications using a Process Bus Module with order code 85, 86, or 87 with IRIG-B for synchronization, follow the recommended cables and grounding connections. If using a Process Bus Module and IRIG-B as the synchronizing source, we recommend moving the grounding from the IRIG-B generator to UR terminal D4a in order to better protect the IRIG-B input from long bursts of transient noise.

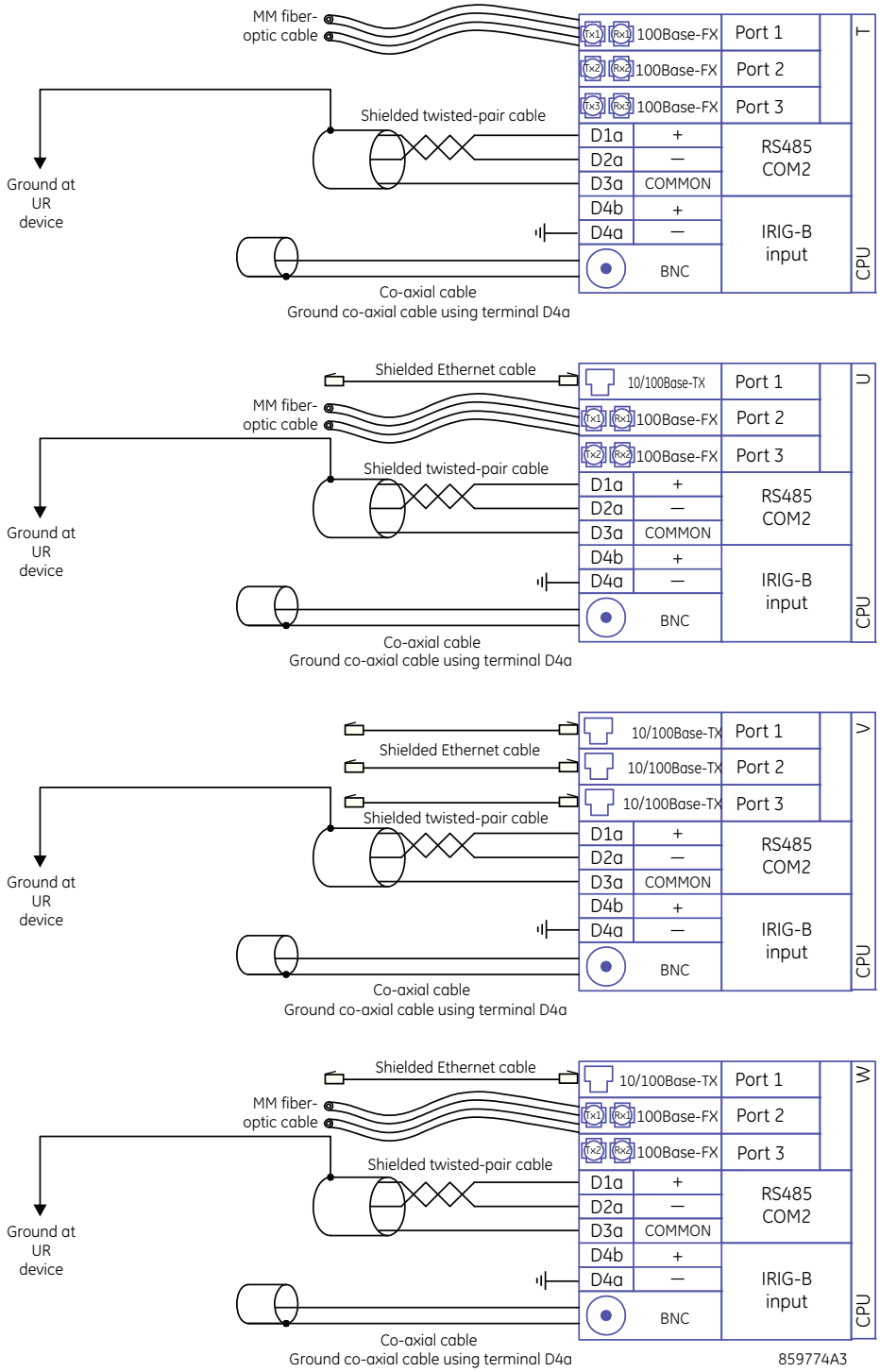

Figure 35: CPU module wiring when using a Process Bus Module

4.5.9.2 RS232 PORT

On the enhanced and basic front panels is a nine-pin RS232C serial port for programming with a computer. All that is required to use this interface is a computer running the EnerVista UR Setup software provided with the relay.

Cabling for the RS232 port is shown in the following figure for the nine-pin connector on the UR and nine or 25-pin connector on a computer.

The baud rate for this port can be set, with a default of 115200 bps.

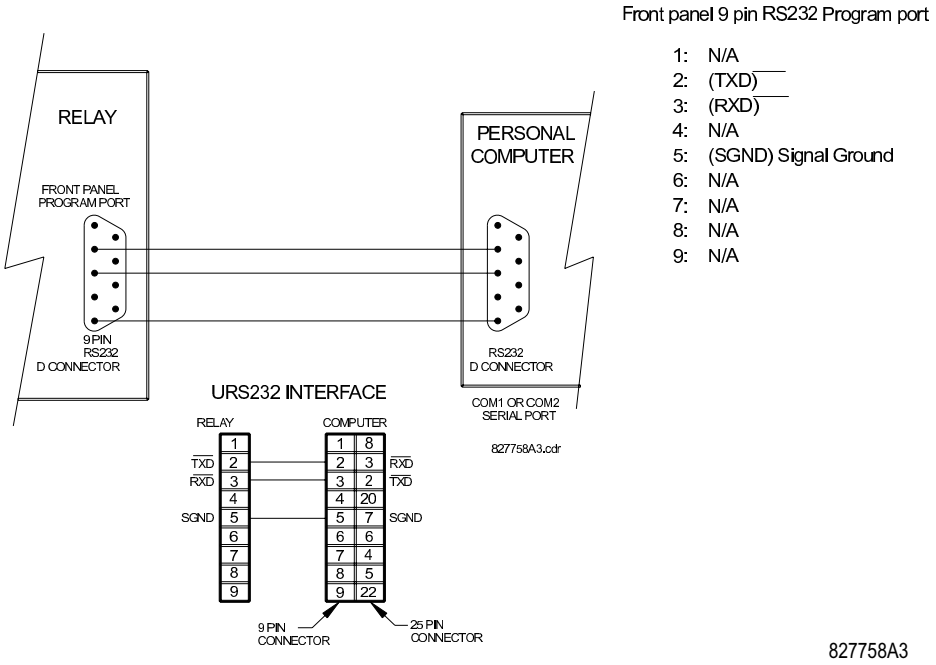

Figure 36: RS232 front panel port connection

4.5.9.3 RS485 PORT

RS485 data transmission and reception are accomplished over a single twisted-pair wire with transmit and receive data alternating over the same two wires.

Through the use of the port, continuous monitoring and control from a remote computer, SCADA system, or Power Line Carrier (PLC) is possible.

To minimize errors from noise, the use of shielded twisted-pair wire is recommended. Correct polarity must be observed. For instance, the relays must be connected with all RS485 “+” terminals connected together, and all RS485 “–” terminals connected together. Though data is transmitted over a two-wire twisted pair, all RS485 devices require a shared reference, or common voltage. This common voltage is implied to be a power supply common. Some systems allow the shield (drain wire) to be used as common wire and to connect directly to the relay COM terminal (#3); others function correctly only if the common wire is connected to the COM terminal, but insulated from the shield.

To avoid loop currents, ground the shield at only one point. If other system considerations require the shield to be grounded at more than one point, insall resistors (typically 100 ohms) between the shield and ground at each grounding point. Each relay needs to be daisy-chained to the next one in the link. A maximum of 32 relays can be connected in this manner without exceeding driver capability. For larger systems, additional serial channels must be added. It is also possible to use commercially available repeaters to have more than 32 relays on a single channel. Avoid star or stub connections entirely.

Lightning strikes and ground surge currents can cause large momentary voltage differences between remote ends of the communication link. For this reason, surge protection devices are provided internally at both communication ports. An isolated power supply with an optocoupled data interface also acts to reduce noise coupling. To ensure maximum reliability, ensure that all equipment has similar transient protection devices installed. Terminate both ends of the RS485 circuit with an impedance as shown in the figure.

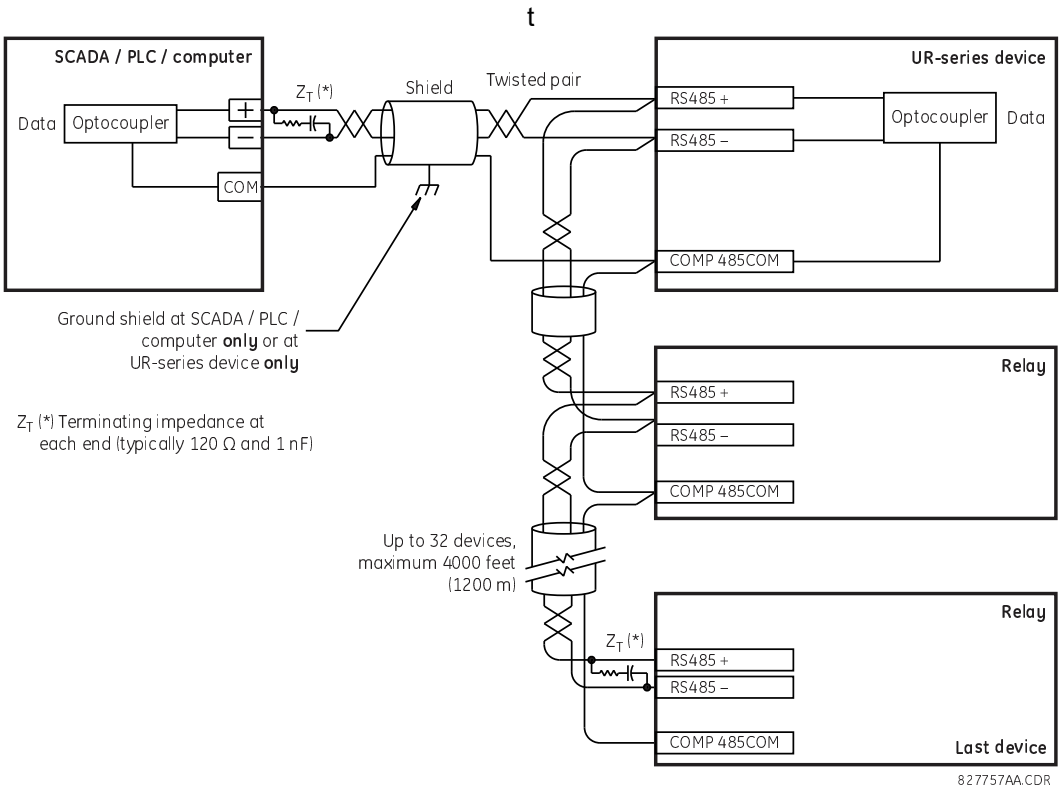

Figure 37: RS485 serial connection

4.5.9.4 100BASEFX FIBER OPTIC PORTS

The fiber-optic communication ports allow for fast and efficient communications between relays at 100 Mbps. Optical fiber can be connected to the relay supporting a wavelength of 1310 nm in multimode.

Ensure that the dust covers are installed when the fiber is not in use. Dirty or scratched connectors can lead to high losses on a fiber link.

4.5.9.5 IRIG-B

There is a round IRIG-B connector at the back of the CPU module, marked "IN." Use is optional. IRIG-B is a standard time code format that allows stamping of events to be synchronized among connected devices. The IRIG-B code allows time accuracies of up to 100 ns. The GE MultiSync 100 1588 GPS Clock as well as third-party equipment are available for generating the IRIG-B signal. This equipment can use a global positioning system (GPS) satellite system to obtain the time reference so that devices at different geographic locations can be synchronized. The IRIG time code formats are serial, pulse width-modulated codes that can be either DC level shifted or amplitude modulated (AM). Using IRIG-B input, the relay operates an internal oscillator with 1 µs resolution and accuracy.

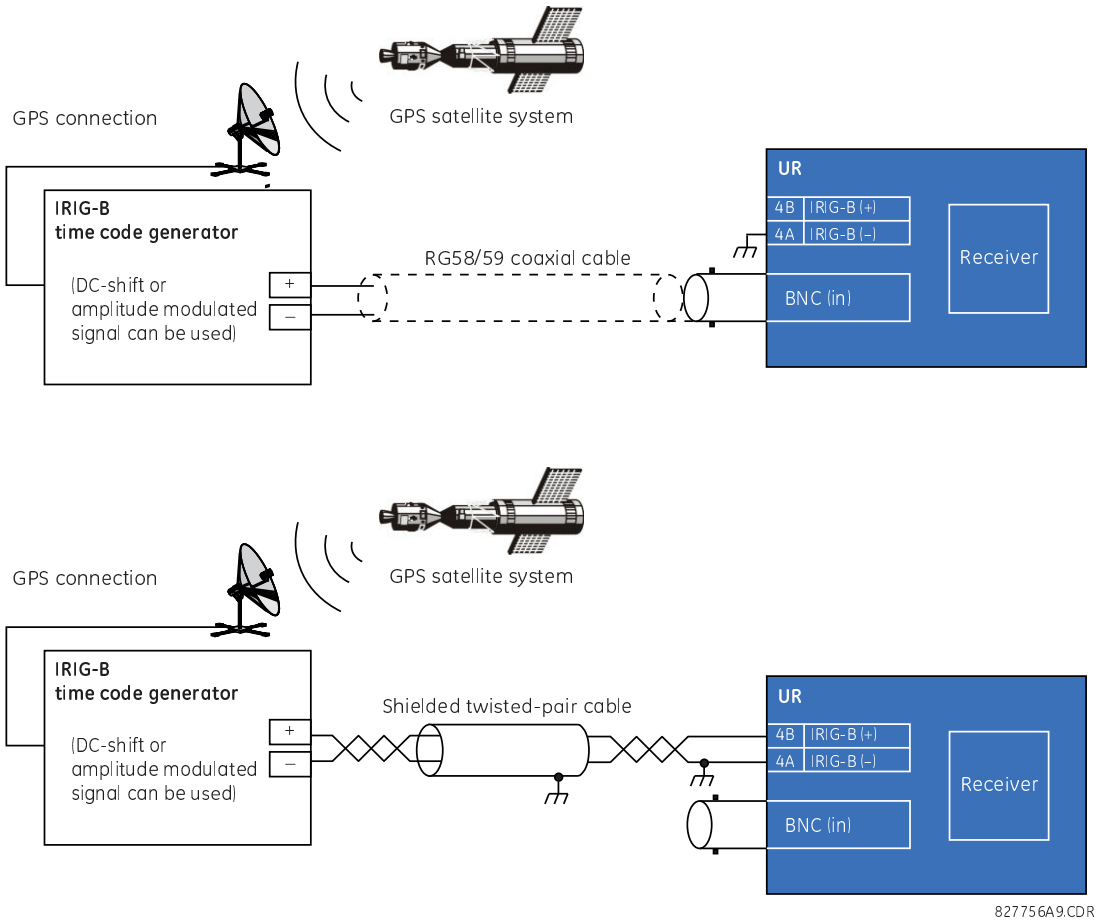

Figure 38: Options for IRIG-B connection

Note:
Using an amplitude-modulated receiver causes errors up to 1 ms in event time stamping.

4.6 INTER-RELAY COMMUNICATIONS

4.6.1 ESD PROTECTION GUIDELINES

Optical cables and transceivers are very sensitive to electrostatic discharge. You can easily damage the modules if you don't handle them correctly. This section provides some guidelines for handling such equipment to prevent damage.

Handling Optical Fiber Cables

- Before connecting cables, discharge any static on you by touching a grounded object.
- Use ESD-Safe Gloves.
- Avoid direct contact with fiber ends. This also prevents contamination.
- If using shielded optical cables, ensure the shield is properly grounded to prevent charge buildup.
- Avoid Rubbing or Sliding Cables on Surfaces. This can generate static charges that may discharge into connected transceivers.
- Avoid dragging or dropping cables on non-ESD surfaces.
- When cleaning fiber optics, use ESD-safe cleaning tools.

Handling Optical Transceivers

- Before handling the transceiver, you must discharge all static electricity on you.
- Use a wrist strap, ensuring that it has good contact with your skin and it is well grounded.
- Avoid Touching Electrical Contacts. Never touch the connector pins.
- When installing or removing transceivers, use an ESD-safe grounding tool if available.

Installation/Testing & Maintenance

- Power down the equipment before installing or removing transceivers.
- Before connecting cables or transceivers, discharge any static on you, by touching a grounded object.
- Use properly-grounded ESD Tools. If tools (such as fiber cleavers or splicers) are required, ensure they are ESD-compliant.
- Avoid hot-swapping in ESD-Prone environments
- Unless explicitly supported by the equipment, do not exchange optical modules while the device is powered.
- Ensure that ESD protection is included in any test setups involving optical transceivers.

4.6.2 DIRECT INPUT AND OUTPUT COMMUNICATIONS

The direct inputs and outputs feature makes use of the type 7 series of communications modules and allows direct messaging between UR devices. The communications modules are outlined in the table later in this section.

The communications channels are normally connected in a ring configuration, as shown in the following figure. The transmitter of one module is connected to the receiver of the next module. The transmitter of this second module is then connected to the receiver of the next module in the ring. This is continued to form a communications ring. The figure illustrates a ring of four UR-series relays with the following connections: UR1-Tx to UR2-Rx, UR2-Tx to UR3-Rx, UR3-Tx to UR4-Rx, and UR4-Tx to UR1-Rx. A maximum of 16 URs can be connected in a single ring.

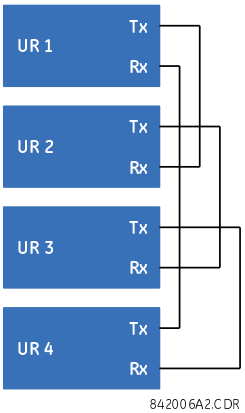

Figure 39: Direct input and output single-channel connection

Inter-relay communication (IRC) modules with the C37.94 protocol are designed for back-to-back communication connections, so the ring configuration shown in the previous figure does not apply. To establish inter-relay communication in more than two URs, you need to have a two-channel IRC module and enable the DIRECT I/O CHANNEL CROSSOVER setting in all relays, as shown in the next figure. This configuration can be expanded to 16 URs, and this configuration does not provide a redundancy ring since both channels are made into a single ring by the channel crossover function. The clock is supplied typically by multiplexer (MUX) and all URs are in Loop Timing Mode. If there is no MUX, then UR1 and UR3 can be in Internal Timing Mode and UR2 and UR4 can be in Loop Timing Mode. That is, connected channels must have opposite timing modes.

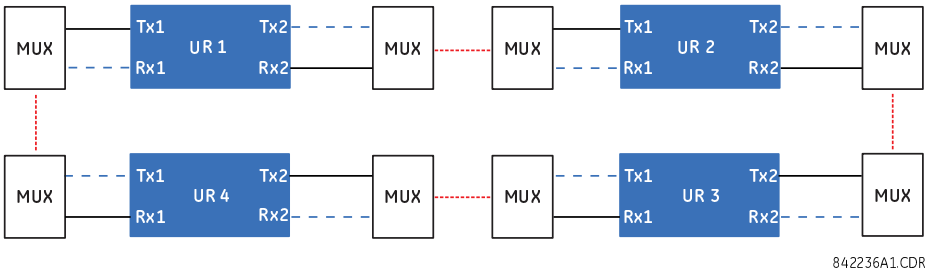

Figure 40: Ring configuration for C37.94 module

The interconnection for dual-channel type 7 communications modules is shown as follows. Two-channel modules allow for a redundant ring configuration. That is, two rings can be created to provide an additional independent data path. The required connections are: UR1-Tx1 to UR2-Rx1, UR2-Tx1 to UR3-Rx1, UR3-Tx1 to UR4-Rx1, and UR4-Tx1 to UR1-Rx1 for the first ring; and UR1-Tx2 to UR4-Rx2, UR4-Tx2 to UR3-Rx2, UR3-Tx2 to UR2-Rx2, and UR2-Tx2 to UR1-Rx2 for the second ring.

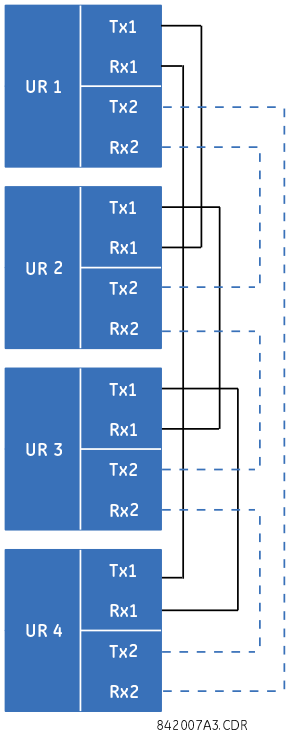

Figure 41: Direct input and output dual-channel connection

The following figure shows the connection for three UR-series relays using two independent communication channels. UR1 and UR3 have single type 7 communication modules; UR2 has a dual-channel module. The two communication channels can be of different types, depending on the type 7 modules used. To allow the direct input and output data to cross-over from channel 1 to channel 2 on UR2, set the ***DIRECT I/O CHANNEL CROSSOVER*** setting to `Enabled` on UR2. This forces UR2 to forward messages received on Rx1 out Tx2, and messages received on Rx2 out Tx1.

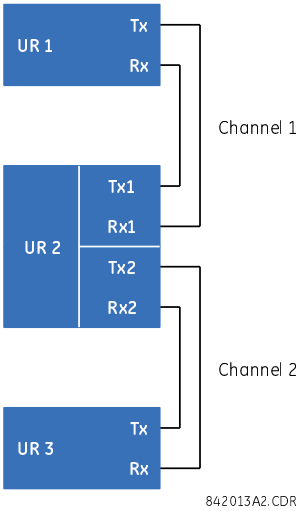

Figure 42: Direct input and output single/dual channel combination connection

The inter-relay communications modules are available with several interfaces and some are outlined here in more detail. Those that apply depend on options purchased. The options are outlined in the Inter-Relay Communications section of the Order Code tables in Chapter 2. All of the fiber modules use ST type connectors.

4.6.3 FIBER LED AND ELED TRANSMITTERS

The following figure shows the configuration for the 7A, 7B, 7C, 7H, 7I, and 7J fiber-only modules.

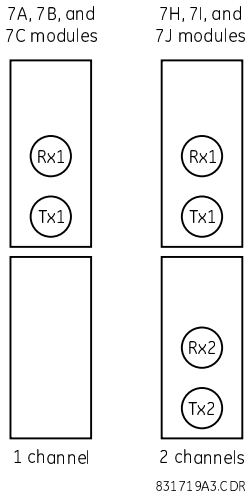

Figure 43: LED and ELED fiber modules

4.6.4 FIBER LASER TRANSMITTERS

The following figure shows the configuration for the 72, 73, 7D, and 7K fiber-laser modules.

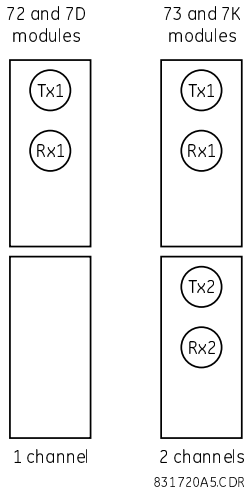

Figure 44: Laser fiber modules

The following figure shows configuration for the 2I and 2J fiber-laser modules.

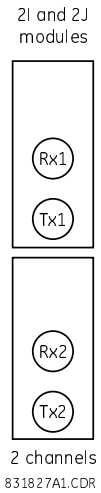

Figure 45: 2I and 2J laser fiber modules

Warning:
Do not look into the output of any fiber transmitter. This could cause serious eye injury.

Note:
When using a laser Interface, attenuators can be necessary to ensure that you do not exceed the maximum optical input power to the receiver

4.6.5 RS422 INTERFACE

The RS422 inter-relay communications module is module 7M, which also has a dual-clock. The module can be configured to run at 64 or 128 kbps. You should use AWG 24 twisted shielded pair cable should for external connections. This modules is protected by an optically-isolated surge suppression device.

The shield pins (6a and 7b) are connected internally to the ground pin (8a). Proper shield termination is as follows:

- Site 1 — Terminate shield to pins 6a or 7b or both
- Site 2 — Terminate shield to COM pin 2b

The clock terminating impedance should be matched with the impedance of the line.

The following figure shows the typical pin interconnection between two single-channel RS422 interfaces installed in slot W. All pin interconnections are to be maintained for a connection to a multiplexer.

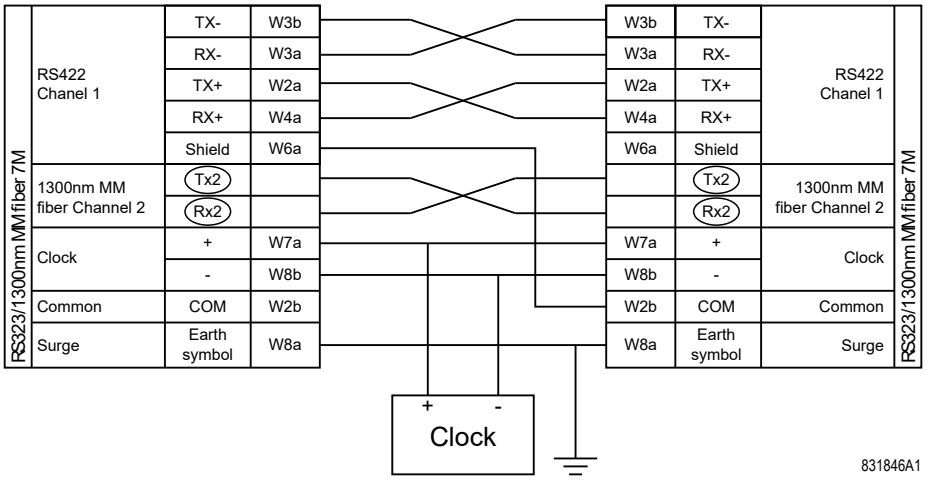

Figure 46: Typical pin interconnection between two RS422 interfaces

4.6.5.1 TWO-CHANNEL APPLICATION VIA MULTIPLEXERS

The RS422 interface can be used for single-channel or two-channel applications over SONET/SDH or multiplexed systems. When used in single-channel applications, the RS422 interface links to higher-order systems in a typical way, observing transmit (Tx), receive (Rx), and send timing (ST) connections. However, when used in two-channel applications, certain criteria must be followed since there is one clock input for the two RS422 channels. The system functions correctly when the following connections are observed and your data module has a terminal timing feature. Terminal timing is a common feature in most synchronous data units that allows the module to accept timing from an external source. Using the terminal timing feature, two-channel applications can be achieved if these connections are followed: the send timing outputs from the multiplexer (data module 1) connects to the clock inputs of the UR RS422 interface in the usual way. In addition, the send timing outputs of data module 1 are also paralleled to the terminal timing inputs of data module 2. By using this configuration, the timing for both data modules and both UR RS422 channels is derived from a single clock source. As a result, data sampling for both of the UR RS422 channels is synchronized via the send timing leads on data module 1, shown as follows. If the terminal timing feature is not available or this type of connection is not wanted, the G.703 interface is a viable option that does not impose timing restrictions.

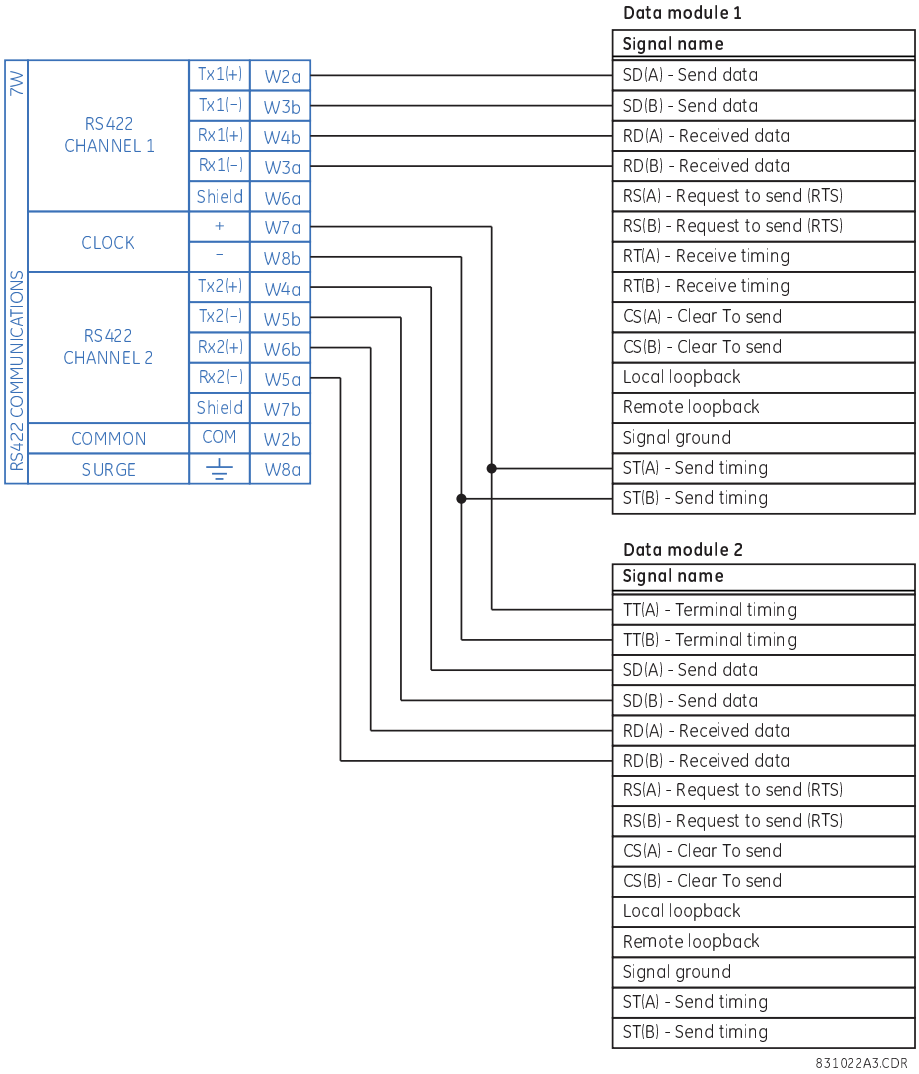

Figure 47: Timing configuration for RS422 two-channel, three-terminal application

Data module 1 provides timing to the RS422 interface via the ST(A) and ST(B) outputs. Data module 1 also provides timing to data module 2 TT(A) and TT(B) inputs via the ST(A) and AT(B) outputs. The data module pin numbers have been omitted in the figure because they vary by manufacturer.

4.6.5.2 TRANSMIT TIMING

The RS422 interface accepts one clock input for transmit timing. It is important that the rising edge of the 64 kHz transmit timing clock of the multiplexer interface is sampling the data in the center of the transmit data window. Therefore, it is important to confirm clock and data transitions to ensure proper system operation. For example, the following figure shows the positive edge of the Tx clock in the center of the Tx data bit.

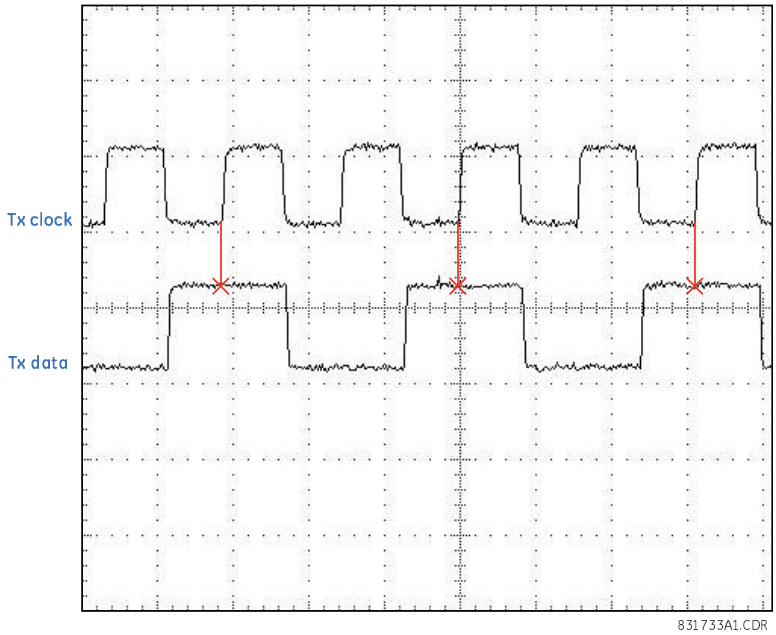

Figure 48: Clock and data transitions

4.6.5.3 RECEIVE TIMING

The RS422 interface utilizes NRZI-MARK modulation code and therefore does not rely on an Rx clock to recapture data. NRZI-MARK is an edge-type, invertible, self-clocking code.

To recover the Rx clock from the data-stream, an integrated digital phase lock loop (DPLL) circuit is utilized. The DPLL is driven by an internal clock, which is 16-times over-sampled, and uses this clock along with the data-stream to generate a data clock that can be used as the serial communication controller (SCC) receive clock.

4.6.6 RS422 AND FIBER INTERFACE

The following figure shows the combined RS422 plus fiberoptic interface configuration at 64 K baud. The 7L, 7M, 7N, 7P, and 74 modules are used in two-terminal with a redundant channel or three-terminal configurations where channel 1 is employed via the RS422 interface (possibly with a multiplexer) and channel 2 via direct fiber.

AWG 20 to 24 twisted shielded pair wiring is recommended for external RS422 connections. Ground the shield only at one end. For the direct fiber channel, address power budget issues properly.

> *Note:*
> *When using a laser interface, attenuators can be necessary to ensure that you do not exceed maximum optical input power to the receiver.*

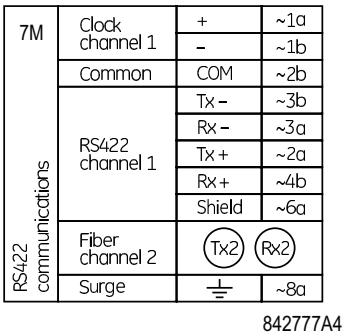

Figure 49: RS422 and fiber interface connection

4.6.7 IEEE C37.94 INTERFACE

IEEE C37.94 is a standard interface between teleprotection equipment and digital multiplexers.

The IEEE C37.94 modules of the UR family are designed to interface with IEEE C37.94- compliant digital multiplexers or an IEEE C37.94-compliant interface converter for use with direct input and output applications. The IEEE C37.94 standard defines a point-to-point optical link for synchronous data between a multiplexer and a teleprotection device. Data speed is typically 64 kbps, but the standard provides for speeds up to 64n kbps, where n = 1, 2,…, 12.

The data frames and rates comply with a valid G.704 pattern as specified by the International Telecommunications Union (ITU-T). The frame comprises 256 bits and is repeated at a frame rate of 8000 Hz, with a resultant bit rate of 2048 kbps.

The specifications for the module are as follows:

- Fiber-optic cable type — 50 nm or 62.5 µm core diameter optical fiber
- Fiber-optic mode — multimode
- Fiber-optic cable length — up to 2 km
- Fiber-optic connector — type ST
- Wavelength — 820 ±40 nm
- Connection — as per all fiber-optic connections, a Tx-to-Rx connection is required

The following C37.94 modules are available:

Module	Description
2A	1300 nm single-mode, ELED, 1-channel, 64 kbps
2B	1300 nm single-mode, ELED, 2-channel, 64 kbps
2G	820 nm multimode LED, 1-channel, 128 kbps
2H	820 nm multimode LED, 2-channel, 128 kbps
2I	Channel 1 multimode, 64/128 kbps* + Channel 2 1300 nm single mode, laser
2J	Channel 1 multimode, 64/128 kbps* + Channel 2 1550 nm single mode, laser
76	820 nm multimode LED, 1-channel, 64 kbps
77	820 nm multimode LED, 2-channel, 64 kbps

* For direct I/O, configurable between 64 and 128 kbps

The UR-series C37.94 module can be connected directly to any compliant digital multiplexer that supports the IEEE C37.94 standard. The figure shows the concept.

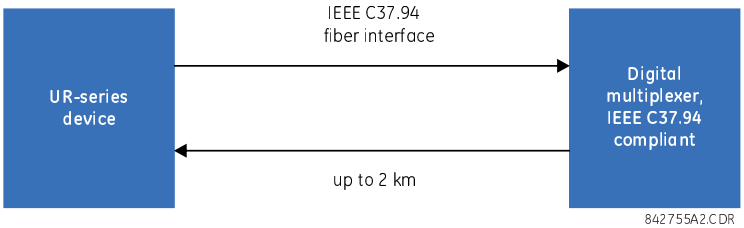

Figure 50: IEEE C37.94 connection to compliant digital multiplexer

The UR-series C37.94 communication module can be connected to the electrical interface (G.703, RS422, or X.21) of a non-compliant digital multiplexer via an optical-to-electrical interface converter that supports the IEEE C37.94 standard. The following figure shows the concept.

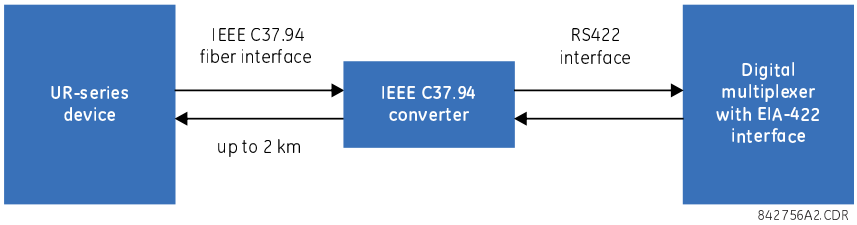

Figure 51: IEEE C37.94 connection to non-compliant digital multiplexer

In 2008, GE Grid Solutions released revised modules 76 and 77 for C37.94 communication to enable multi-ended fault location functionality with firmware 5.60 release and higher. Revised 76 and 77 modules can be identified with "Rev D" or "Rev E" printed on it and must be used on all ends of of relay communication for two and three terminal applications with firmware 5.6 or higher.

It is possible to mix newer Rev D or Rev E modules with older Rev C modules with any firmware revision.

The UR-series C37.94 communication module has six switches to set the clock configuration. The following figure shows the functions of these control switches.

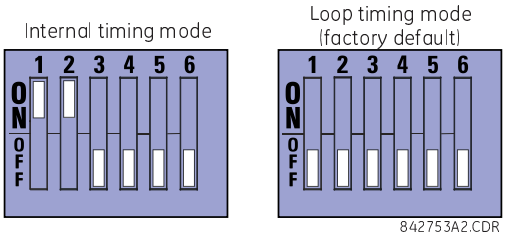

Figure 52: Clock configuration switches

For the internal timing mode, the system clock is generated internally. Therefore, set the timing switch selection to internal timing for relay 1 and loop timed for relay 2. There must be only one timing source configured.

For the looped timing mode, the system clock is derived from the received line signal. Therefore, set the timing selection to loop timing mode for connections to higher order systems.

To remove the IEEE C37.94 communications module cover and set the switches:

1. With power to the relay off, remove the IEEE C37.94 module (type 2I, 2J, 76, or 77 module) as follows. Record the original location of the module to help ensure that the same or replacement module is inserted into the correct slot.
2. Simultaneously pull the ejector/inserter clips located at the top and bottom of each module in order to release the module for removal.
3. Remove the module cover screw.
4. Remove the top cover by sliding it towards the rear and then lift it upwards.
5. Set the timing selection switches (channels 1 and 2) to the required timing modes (see description earlier).
6. Replace the top cover and the cover screw.
7. Re-insert the IEEE C37.94 module. Take care to ensure that the correct module type is inserted into the correct slot position. The ejector/inserter clips located at the top and at the bottom of each module must be in the disengaged position as the module is inserted smoothly into the slot. Once the clips have cleared the raised edge of the chassis, engage the clips simultaneously. When the clips have locked into position, the module is inserted fully.

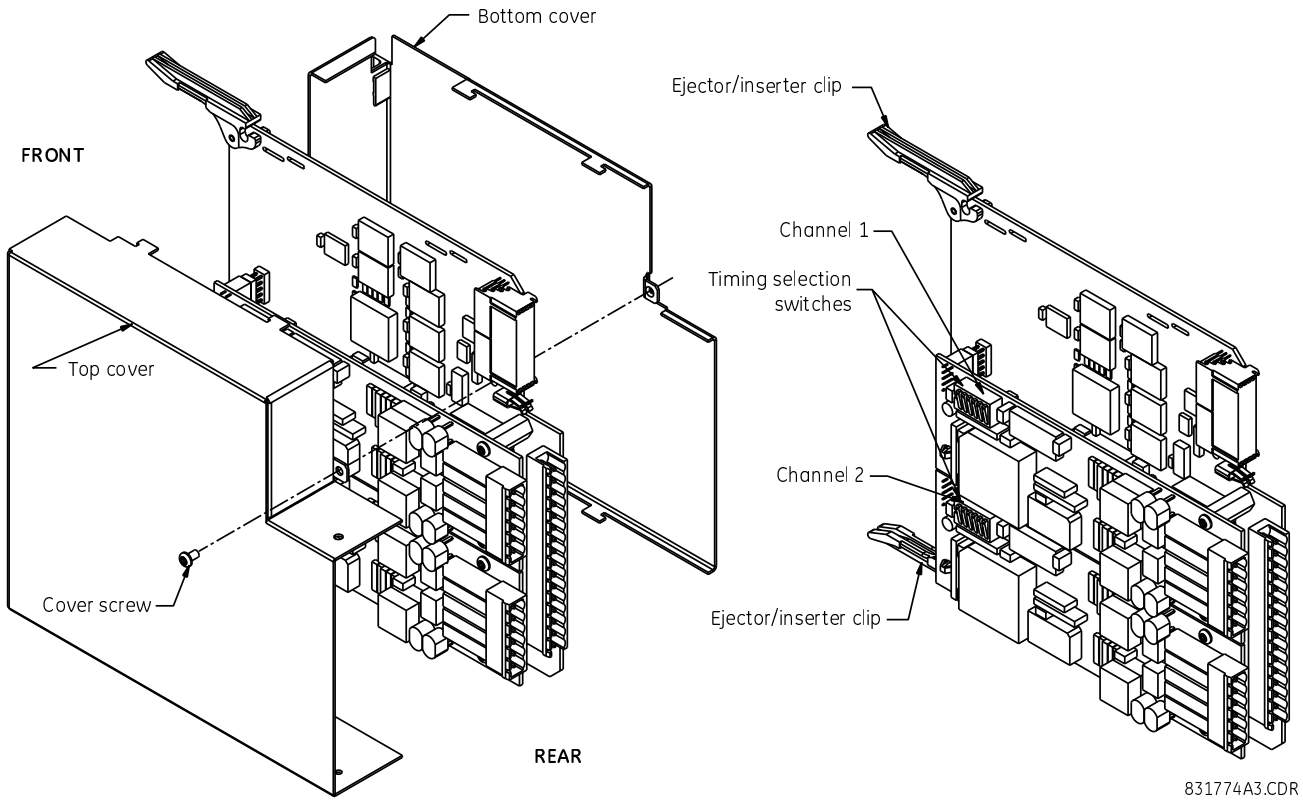

Figure 53: IEEE C37.94 timing selection switch setting

Modules shipped since January 2012 have status LEDs that indicate the status of the DIP switches, as shown in the following figure.

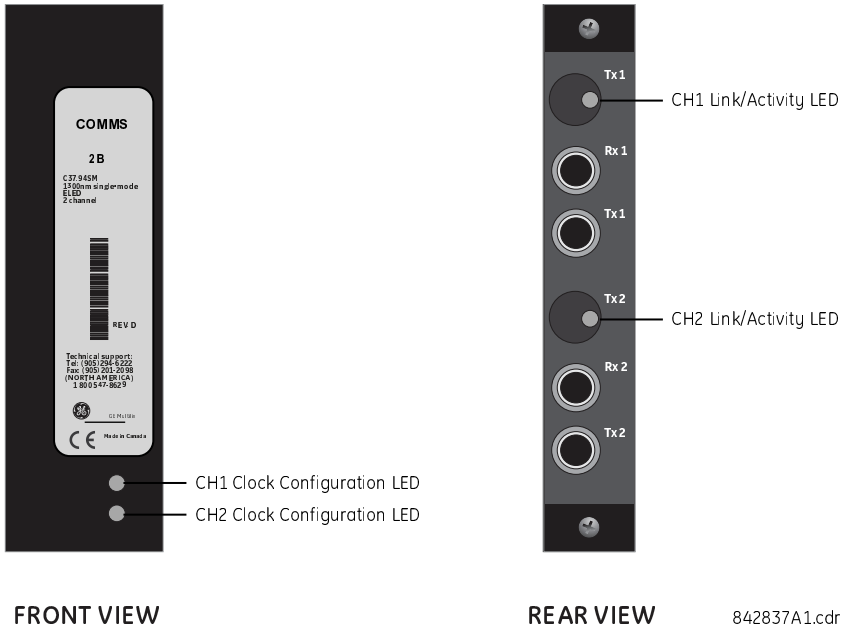

Figure 54: Status LEDs

The clock configuration LED status is as follows:

- Flashing green — loop timing mode while receiving a valid data packet
- Flashing yellow — internal mode while receiving a valid data packet
- Solid red — (switch to) internal timing mode while not receiving a valid data packet

The link/activity LED status is as follows:

- Flashing green — FPGA is receiving a valid data packet
- Solid yellow — FPGA is receiving a "yellow bit" and remains yellow for each "yellow bit"
- Solid red — FPGA is not receiving a valid packet or the packet received is invalid

4.6.8 C37.94SM INTERFACE

The IEEE C37.94SM communication modules are designed to interface with modified IEEE C37.94 compliant digital multiplexers or IEEE C37.94 compliant interface converters that have been converted from 820 nm multimode fiber optics to 1300 nm ELED single-mode fiber optics. The IEEE C37.94 standard defines a point-to-point optical link for synchronous data between a multiplexer and a teleprotection device. This data is typically 64 kbps, but the standard provides for speeds up to 64n kbps, where n = 1, 2,…, 12. The UR-series C37.94SM communication module is 64 kbps only with n fixed at 1. The frame is a valid ITU-recommended G.704 pattern from the standpoint of framing and data rate. The frame is 256 bits and is repeated at a frame rate of 8000 Hz, with a resultant bit rate of 2048 kbps.

The specifications for the module are as follows:

- Emulated IEEE standard — Emulates C37.94 for 1 × 64 kbps optical fiber interface (modules set to n = 1 or 64 kbps)
- Fiber-optic cable type — 9/125 µm core diameter optical fiber
- Fiber-optic mode — Single-mode, ELED compatible with HP HFBR-1315T transmitter and HP HFBR-2316T receiver
- Fiber-optic cable length — Up to 11.4 km
- Fiber-optic connector — Type ST
- Wavelength — 1300 ±40 nm
- Connection — As per all fiber-optic connections, a Tx-to-Rx connection is required

The UR-series C37.94SM communication module can be connected directly to any compliant digital multiplexer that supports C37.94SM, as shown.

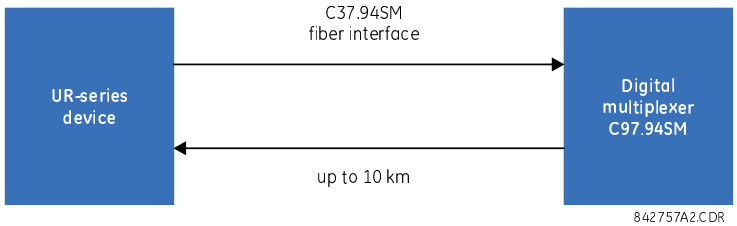

Figure 55: C37.94SM fiber interface to digital multiplexer

It also can be connected directly to any other UR-series relay with a C37.94SM module, as shown.

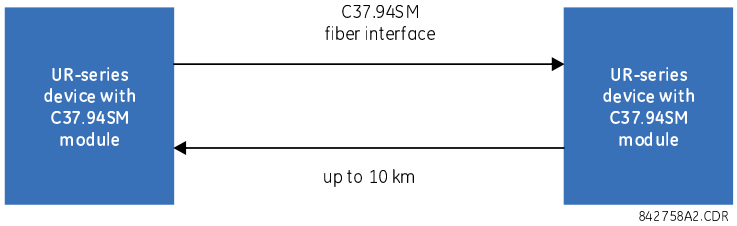

Figure 56: C37.94SM fiber interface to another UR

In 2008, GE Grid Solutions released revised modules 2A and 2B for C37.94SM communication to enable multi-ended fault location functionality with firmware 5.60 release and higher. All modules 2A and 2B shipped since the change support this feature and are fully backward compatible with firmware releases below 5.60. For customers using firmware release 5.60 and higher, the module can be identified with "Rev D" printed on it and is to be used on

all ends of relay communication for two and three terminal applications. Failure to use it at all ends results in intermittent communication alarms. For customers using firmware revisions below 5.60, it is not required to match the revision of the modules installed.

The UR-series C37.94SM module has six switches that are used to set the clock configuration. The following figure shows the functions of these control switches.

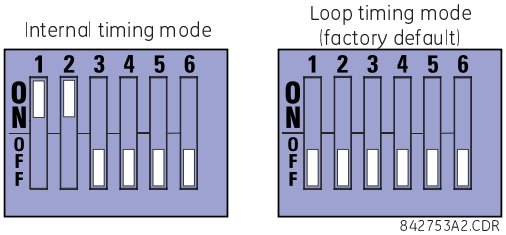

Figure 57: Switches

For the internal timing mode, the system clock is generated internally. Therefore, set the timing switch selection to internal timing for relay 1 and loop timed for relay 2. There must be only one timing source configured.

For the looped timing mode, the system clock is derived from the received line signal. Therefore, set the timing selection to loop timing mode for connections to higher-order systems.

To remove the C37.94SM communications module cover and set the switches:

1. With power to the relay off, remove the C37.94SM module (module 2A or 2B) as follows. Record the original location of the module to help ensure that the same or replacement module is inserted into the correct slot.
2. Simultaneously pull the ejector/inserter clips located at the top and at the bottom of each module in order to release the module for removal.
3. Remove the module cover screw.
4. Remove the top cover by sliding it towards the rear and then lift it upwards.
5. Set the timing selection switches (channels 1 and 2) to the required timing modes (see description earlier).
6. Replace the top cover and the cover screw.
7. Re-insert the C37.94SM module. Take care to ensure that the correct module type is inserted into the correct slot position. The ejector/inserter clips located at the top and at the bottom of each module must be in the disengaged position as the module is inserted smoothly into the slot. Once the clips have cleared the raised edge of the chassis, engage the clips simultaneously. When the clips have locked into position, the module is inserted fully.

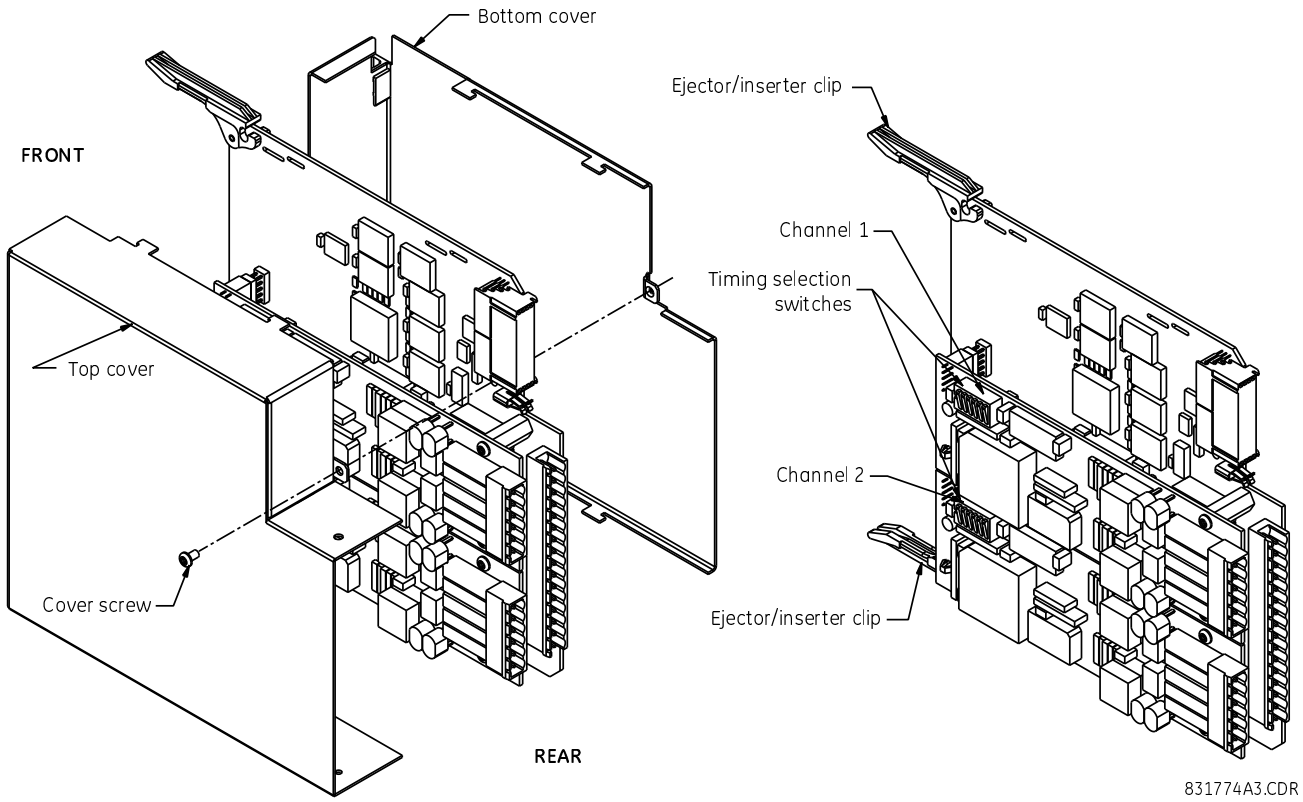

Figure 58: C37.94SM timing selection switch setting

Modules shipped since January 2012 have status LEDs that indicate the status of the DIP switches, as shown in the following figure.

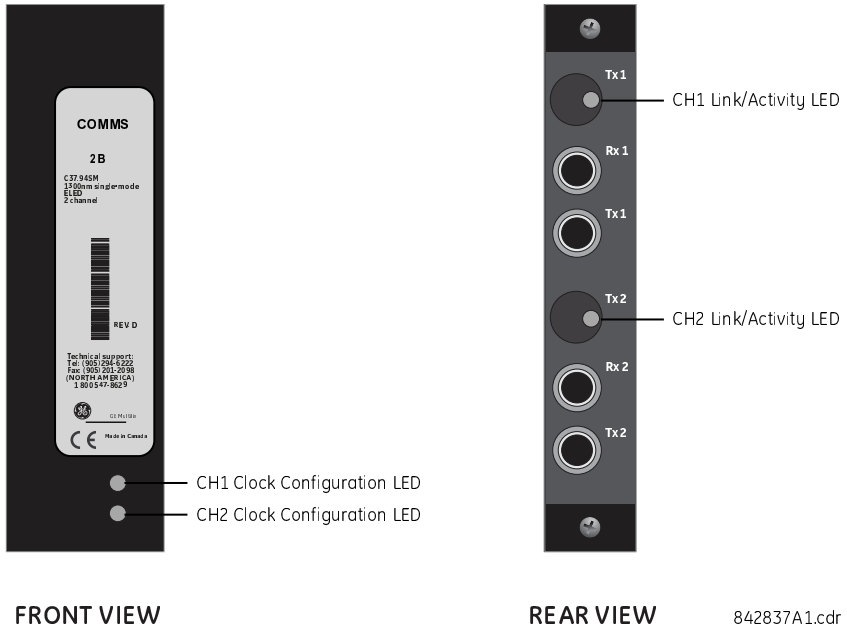

Figure 59: Status LEDs

The clock configuration LED status is as follows:

- Flashing green — loop timing mode while receiving a valid data packet
- Flashing yellow — internal mode while receiving a valid data packet
- Solid red — (switch to) internal timing mode while not receiving a valid data packet

The link/activity LED status is as follows:

- Flashing green — FPGA is receiving a valid data packet
- Solid yellow — FPGA is receiving a "yellow bit" and remains yellow for each "yellow bit"
- Solid red — FPGA is not receiving a valid packet or the packet received is invalid

4.7 ACTIVATE RELAY

The relay is in the default “Not Programmed” state when it leaves the factory. When the relay is powered up, the "Trouble" LED is on and the "In Service" LED is off. This "Not programmed state is evident on the screen display.

The relay in the “Not Programmed” state blocks all output relays from activating. This conditions remains until the relay is explicitly put into “Programmed” state.

The relay can be activated either directly using the front panel or alternatively with the EnerVista software.

To activate the relay using the front panel:

1. Press the **MENU** key until the ***SETTINGS*** header flashes momentarily and the ***PRODUCT SETUP*** message displays.
2. Press the right arrow until the SECURITY message displays.
3. Press the down arrow until the INSTALLATION message displays.
4. Press the right arrow until the RELAY SETTINGS: *Not Programmed* message displays
5. After the ***RELAY SETTINGS*** *Not Programmed* message displays, press a VALUE key to change the selection to "Programmed."
6. Press the **ENTER** key to save the change.
7. When the *NEW SETTING HAS BEEN STORED* message appears, the relay is in the "Programmed" state and the **In Service** LED turns on.

To activate the relay using EnerVista software:

1. Navigate to **Settings > Product Setup > Installation** and change the Relay Settings field to "Programmed."
2. Save the change.

4.8 SOFTWARE INSTALLATION

4.8.1 ENERVISTA COMMUNICATION OVERVIEW

The EnerVista UR Setup software communicates to the relay via the front panel RS232 or USB port or the rear RS485 / Ethernet ports.

To communicate via the RS232 port, use a standard straight-through serial cable. Connect the DB-9 male end to the relay and the DB-9 or DB-25 female end to the computer COM2 port as described in the CPU Communication Ports section earlier in this chapter.

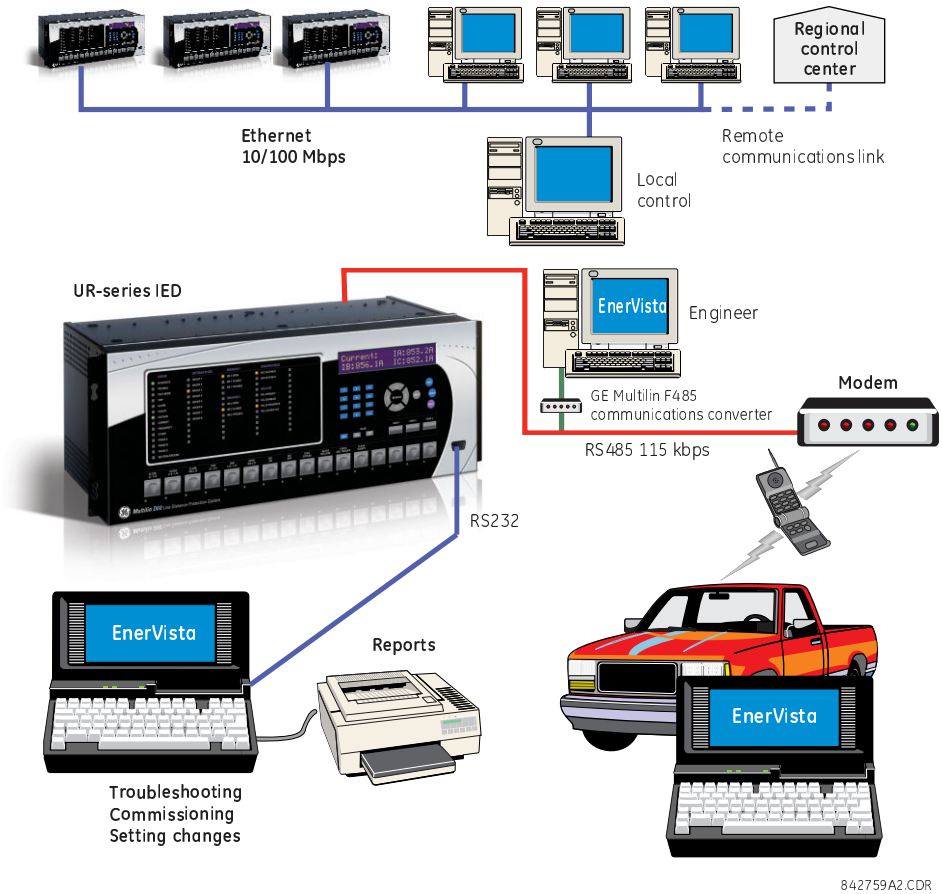

Figure 60: Relay communication options

To communicate through the relay's rear RS485 port from a computer RS232 port, the RS232/RS485 converter box is required. This device (catalog number F485) connects to the computer using a straight-through serial cable. A shielded twisted-pair wire (20, 22, or 24 AWG) connects the F485 converter to the rear communications port. The converter terminals (+, –, GND) are connected to the communication module (+, –, COM) terminals. See the CPU Communication Ports section in chapter 3 for details. The line is terminated with an R-C network (that is, 120 Ω, 1 nF) as described in this chapter.

4.8.2 SYSTEM REQUIREMENTS

The relay front panel or the EnerVista UR Setup software can be used to communicate with the relay. The software interface is the preferred method to edit settings and view actual values because the computer monitor can display more information.

The minimum system requirements for the EnerVista software are as follows:

- Intel Pentium processor (dual core) or (recommended) Core Duo
- One of the following operating systems in the required EnerVista language, such as English or French:
  - Windows 10
  - Windows Server 2008 Release 2 with Service Pack 1 (64-bit)
  - Windows Server 2012 Release 2 (64-bit)
  - Windows Server 2016
- 1 GB free hard drive space
- 2 GB RAM
- 1280 x 800 display screen

4.8.3 INSTALLING THE SOFTWARE

After ensuring that the requirements for using EnerVista UR Setup software are met, there are three ways to install the software:

- Download EnerVista Launchpad software from https://www.gevernova.com/grid-solutions/multilin and install it
- Download the EnerVista UR Setup software from https://www.gevernova.com/grid-solutions/multilin and install it

Install on a computer that has an operating system in the required language, for example a German operating system for use with EnerVista software in German.

The software can be installed on one computer and used by one user, unless permission is granted otherwise.

To install the software:

1. Click the **Install Now** button and follow the instructions.
2. When installation is complete, start the EnerVista Launchpad application.
3. Click the **IED Setup** section of the Launch Pad window.
4. In the EnerVista Launch Pad window, click the **Add Product** button and select the appropriate product as follows.
5. Select the product and click the **Add Now** button
6. Follow the instructions in the wizard to complete the process. The files are installed in the directory indicated, and the installation program automatically creates icons and adds an entry to the Windows start menu.
7. For non-English software, configure the language for the front panel in the EnerVista software under **Settings > Product Setup > Display Properties.** User-entered strings are not translated, for example relay names, so setting the language now ensures that the names are entered/displayed in the required language. For the EnerVista software language, access the **View > Language** menu item.

4.9 ADD DEVICE TO SOFTWARE

You connect remotely to the relay through the rear RS485 or Ethernet port with a computer running the EnerVista UR Setup software. The relay also can be accessed locally with a computer through the front panel RS232 or USB port or the rear Ethernet port using the Quick Connect feature.

The following procedures are outlined:

- Add device for serial access; see the Configure Serial Connection section
- Add device for the rear Ethernet port; see the Configure Ethernet Connection section
- Add device for access using a modem; see the Configure Modem Connection section
- Connect locally with a computer through either the front RS232 or USB port or rear Ethernet port
- Discover automatically UR devices within a network; see the Automatic Discovery of UR Devices section

Devices in the Device Setup window are listed in the order entered.

Devices in the main software window are listed alphabetically. Use the Device Name to order them as required, for example B30 Odessa, B30 Truro, B90, T35.

You cannot import a file to add a device to the software. You can import settings as outlined at the end of the chapter. The Quick Connect button also can be used to add devices. The device is added to a Quick Connect menu item in the Online Window area, cannot be moved from it to another grouping, and needs to be renamed in the Device Setup window. GE instead recommends using the Device Setup window to add devices, as outlined here.

4.9.1 SET IP ADDRESS IN UR

The UR family supports the use of subnetworks as documented in RFC 950, which divides class-based networks into subnetworks (non-CIDR). The classes and IP address ranges are defined as follows.

Classes	IP address range	Default subnet mask address	UR devices
A	1.0.0.0 to 127.255.255.255	255.0.0	65,535 or more
B	128.0.0.0 to 191.255.255.255	255.255.0.0	255 to 65,534
C	192.0.0.0 to 23.255.255.255	255.255.255.0	0 to 254
D	224.0.0.0 to 239.255.255.255	(Reserved for multicasting)	
E	240.0.0.0 to 255.255.255.255	(Reserved)	

Both network and subnet addresses are contained within a range. The number of hosts determines the class and addresses as follows:

- Class A 255.0.0.0 — The first octet (255) specifies the network, the second to fourth octets (0) specify the subnet and host. Use this class when you have more than 65,535 hosts (UR devices).
- Class B 255.255.0.0 — The first two octets (255) specify the network, the third octet (0) specifies the subnet, and the fourth octet (0) specifies the host. Use this class when you have 255 to 65,534 hosts (UR devices).
- Class C 255.255.255.0 — The first three octets (255) specify the network and the last octet (0) specifies the subnet and host. Use this class when you have up to 254 hosts (UR devices).

An example of implementation is one computer and one UR device. Because there is one UR device, class C addressing is required. So we use UR 192.167.2.x with subnet mask 255.255.255.0 and computer 192.167.3.x with subnet mask 255.255.255.0.

For older, non-CIDR routing protocols, such as RIP version 1, follow these restrictions:

- Identical subnet masks — Use a single mask for all subnets within a network
- Contiguous subnets — The subnets must be contiguous and not split among networks. The subnets cannot pass traffic through other networks.

The IP and subnet addresses need to be added to the UR for Ethernet communication.

For serial communication, for example using any front RS232 port and the Quick Connect feature, the addresses are not required, but typically they are entered to add/configure devices for regular use.

To add the IP addresses:

1. On the front of the UR, press the **MENU** key until the ***SETTINGS*** menu displays.
2. Navigate to one of the ports under ***SETTINGS > PRODUCT SETUP > COMMUNICATIONS > NETWORK > NETWORK PORT > PRT IP ADDRESS***.
3. Enter an IP address and press the **ENTER** key to save the value.
4. In the same menu, select the ***PRT SUBNET IP MASK*** setting. Enter a subnet IP address. Press the **ENTER** key to save the value.
5. When connecting through an Ethernet network, also configure the gateway address under ***SETTINGS > PRODUCT SETUP > COMMUNICATIONS > IPv4 ROUTE TABLE > DEFAULT IPv4 ROUTE GATEWAY ADDRESS***. Press the **ENTER** key to save the value.

If using a blue or grey Ethernet cable, skip the rest of the this section. If this connection is to be permanent, always use shielded twisted pair (STP) cable.
If using an orange cross-over Ethernet cable, the computer needs to be set up as follows.

1. Use an orange Ethernet cross-over cable to connect the computer to the rear Ethernet port. In case you need it, the following figure shows the pinout for an Ethernet cross-over cable.

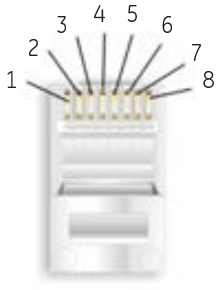

END 1		
Pin	Wire color	Diagram
1	White/orange	
2	Orange	
3	White/green	
4	Blue	
5	White/blue	
6	Green	
7	White/brown	
8	Brown	

END 2		
Pin	Wire color	Diagram
1	White/green	
2	Green	
3	White/orange	
4	Blue	
5	White/blue	
6	Orange	
7	White/brown	
8	Brown	

842799A1.CDR

Figure 61: Ethernet cross-over cable PIN layout

2. Navigate to the menu where you can set the IP properties
3. Enter an IP address with the first three numbers the same as the IP address of the relay and the last number different (in this example, 1.1.1.2).
4. Enter a subnet mask equal to the one set in the relay (in this example, 255.0.0.0).
5. Confirm the values.

4.9.2 TEST ETHERNET CONNECTION

1. Open a Windows console window, for example by selecting Start > Run from the Windows Start menu and typing `cmd` or clicking the **Start** button and entering `cmd`.
2. Type ping followed by a space, followed by the relevant IP address. (in this example, the IP address is 1.1.1.1)

```
C:\WINNT>ping 1.1.1.1
```

3. If the connection is successful, the system returns four replies similar to the following:

```
Pinging 1.1.1.1 with 32 bytes of data:
Reply from 1.1.1.1: bytes=32 time<10ms TTL=255
Reply from 1.1.1.1: bytes=32 time<10ms TTL=255
Reply from 1.1.1.1: bytes=32 time<10ms TTL=255
Reply from 1.1.1.1: bytes=32 time<10ms TTL=255
Ping statistics for 1.1.1.1:
Packets: Sent = 4, Received = 4, Lost = 0 (0% loss),
Approximate round trip time in milliseconds:
Minimum = 0ms, Maximum = 0ms, Average = 0 ms
```

> *Note:*
> *Note that the values for time and TTL vary depending on local network configuration.*

4. If the following sequence of messages appears when entering the `C:\WINNT>ping 1.1.1.1` command:

```
Pinging 1.1.1.1 with 32 bytes of data:
Request timed out.
Request timed out.
Request timed out.
Request timed out.
Ping statistics for 1.1.1.1:
Packets: Sent = 4, Received = 0, Lost = 4 (100% loss),
Approximate round trip time in milliseconds:
Minimum = 0ms, Maximum = 0ms, Average = 0 ms
Pinging 1.1.1.1 with 32 bytes of data:
```

   Verify the physical connection between the relay and the computer, check the programmed IP address then repeat step 2.

5. If the following sequence of messages appears when entering the `C:\WINNT>ping 1.1.1.1` command:

```
Pinging 1.1.1.1 with 32 bytes of data:
Hardware error.
Hardware error.
Hardware error.
Hardware error.
Ping statistics for 1.1.1.1:
Packets: Sent = 4, Received = 0, Lost = 4 (100% loss),
Approximate round trip time in milliseconds:
Minimum = 0ms, Maximum = 0ms, Average = 0 ms
Pinging 1.1.1.1 with 32 bytes of data:
```

   Verify the physical connection between the relay and the computer, check the programmed IP address, then repeat step 2.

6. If the following sequence of messages appears when entering the `C:\WINNT>ping 1.1.1.1` command:

```
Pinging 1.1.1.1 with 32 bytes of data:
Destination host unreachable.
Destination host unreachable.
Destination host unreachable.
Destination host unreachable.
Ping statistics for 1.1.1.1:
Packets: Sent = 4, Received = 0, Lost = 4 (100% loss),
Approximate round trip time in milliseconds:
Minimum = 0ms, Maximum = 0ms, Average = 0 ms
Pinging 1.1.1.1 with 32 bytes of data:
```

   Verify the IP address is programmed in the local computer by entering the `ipconfig` command in the command window. The IP configuration should look similar to this:

```
Windows IP Configuration
Ethernet adapter <F4FE223E-5EB6-4BFB-9E34-1BD7BE7F59FF>:
Connection-specific DNS suffix. . :
IP Address. . . . . . . . . . . . : 0.0.0.0
Subnet Mask . . . . . . . . . . . : 0.0.0.0
Default Gateway . . . . . . . . . :
Ethernet adapter Local Area Connection:
Connection-specific DNS suffix . :
IP Address. . . . . . . . . . . . : 1.1.1.2
Subnet Mask . . . . . . . . . . . : 255.0.0.0
Default Gateway . . . . . . . . . :
```

4.9.3 INTERNET CONFIGURATION

1. Start your internet browse.
2. Select the UR device from the EnerVista Launchpad to start EnerVista UR Setup.
3. Click the Quick Connect button to open the window.
4. Select the Ethernet interface and enter the IP address assigned to the relay, then click the Connect button. The EnerVista UR Setup software creates a site named “Quick Connect” with a corresponding device also named “Quick Connect” and displays them on the left side of the screen.
5. Expand the sections to view data directly from the device.

Each time that the EnerVista UR Setup software is initialized, click the Quick Connect button to establish direct communications to the relay. This ensures that configuration of the EnerVista UR Setup software matches the relay model number.

4.9.4 CONFIGURE SERIAL CONNECTION

Two options are possible: local connection between computer and front RS232 port, and remote connection using the rear RS485 terminals.

If using Windows 10 and a GE USB-to-Serial Cable Converter (part number 0100-0001) connected between a USB port on the computer and the front serial port on the UR, use the Prolific driver version 3.2.0.0 from the Internet.

To use the RS485 terminals at the back of the relay, a GE Grid Solutions F485 converter (or compatible RS232-to-RS485 converter) is required. See the F485 instruction manual for details.

1. Connect the computer to the F485 and the F485 to the RS485 terminal on the back of the UR device. Or connect the computer to the RS232 port on the front of the relay.
2. Start the EnerVista UR Setup software, or in EnerVista Launchpad select the UR device to start the software.
3. Click the **Device Setup** button. The window opens.
4. Click the **Add Site** button. A new category is added. Enter a site name in the **Site Name** field. Optionally add a short description of the site. This example uses `Location 1` as the site name.
5. Click the **Add Device** button. A new device is added.
6. Enter a name in the **Device Name** field, up to 16 characters, and optionally add a description of the site. The **Color** option is for the text in the device list in the Online Window.
7. Select *`Serial`* from the **Interface** drop-down list. Interface parameters display that must be entered for serial communications. Try to load automatically the fields by clicking the **Read Order Code** button.

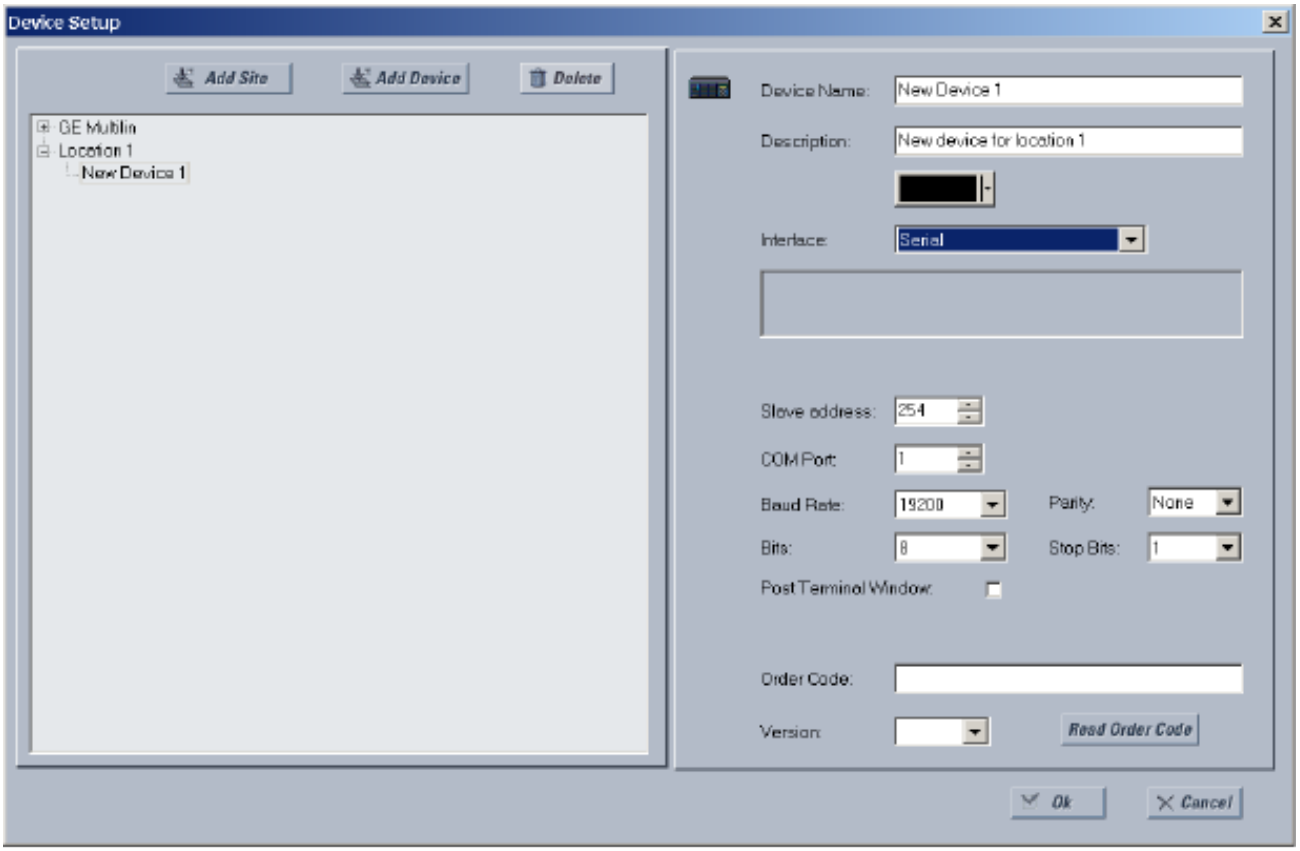

Figure 62: Configuring serial communication

8. Enter the COM port used by the computer, the baud rate, and parity settings from the front panel ***SETTINGS > PRODUCT SETUP > COMMUNICATIONS > SERIAL PORTS*** menu, and the relay slave address setting from the front panel ***SETTINGS > PRODUCT SETUP > COMMUNICATIONS > MODBUS PROTOCOL > MODBUS SLAVE ADDRESS*** menu in their respective fields.

   Baud Rate — Typically 19200 bits per second (bps) for RS232, and higher for RS485. Both modems need to use the same rate, meaning at the computer and the relay ends.

   Parity — Set to None if unsure

   Bits — Set to 8 if unsure

   Stop Bits — Set to 1 if unsure

   Post Terminal Window — Enable this option if you have a Schweitzer Engineering (SEL) SEL-203x Communications Processor, such as an SEL-2030 or SEL-2032. This option enables display of a terminal window to allow interaction with the other device.

9. Click the **Read Order Code** button to connect to the relay and upload the order code to the EnerVista software. If a communications error occurs, ensure that the EnerVista software serial communications values entered in the previous step correspond to the relay setting values, and also ensure that the same IP address is not assigned to multiple ports.

10. Click the **OK** button when the relay order code has been received. The new site and device are added to the Online Window.

11. The device has now been configured for serial communications.

4.9.5 CONFIGURE ETHERNET CONNECTION

You connect the Ethernet cable, define a site in the software, then add the relay as a device for the site.

The Ethernet cable can be connected from the relay to an Ethernet network or directly to the computer. If this connection is to be permanent, always use shielded twisted pair (STP) cable.

The computer and UR device must be on the same subnet.

1. Connect the Ethernet network cable and any SFP supplied with the relay to the Ethernet port on the CPU module at the back of the device.
2. Start the EnerVista UR Setup software, or in EnerVista Launchpad select the UR device to start the software.
3. Click the **Device Setup** button. The window opens.
4. Click the **Add Site** button. A new category is added. Enter a site name in the **Site Name** field. Optionally add a short description of the site. This example uses `Location 1` as the site name.
5. Click the **Add Device** button. A new device is added.
6. 6. Enter a name in the **Device Name** field, up to 16 characters, and optionally add a description of the site. The **Color** option is for the text in the device list in the Online Window.
7. Select *`Ethernet`* from the Interface drop-down list. This displays a number of interface parameters that must be entered for Ethernet functionality.

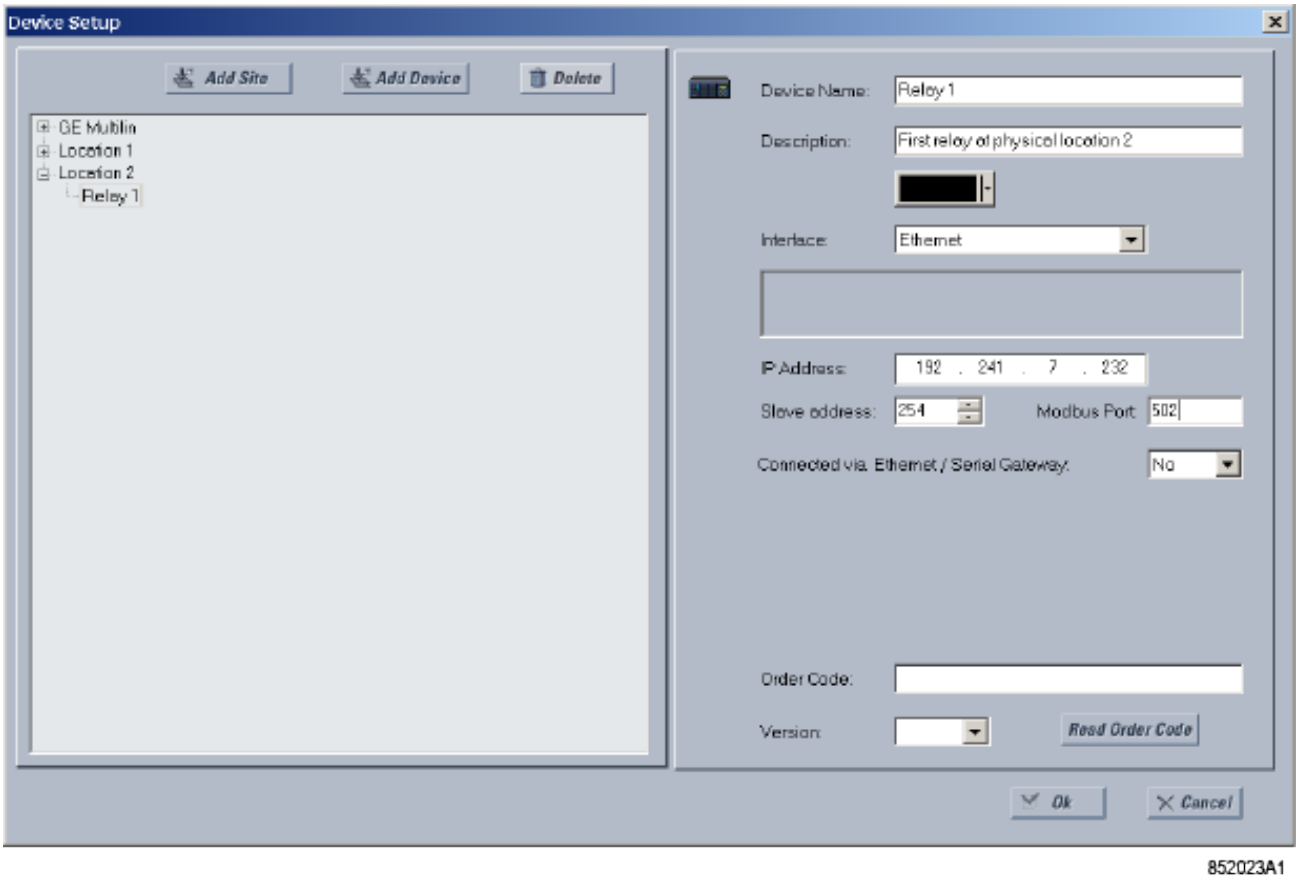

Figure 63: Configuring Ethernet communication

8. Enter the relay IP Address, which can be viewed on the device front panel under ***SETTINGS > PRODUCT SETUP COMMUNICATIONS > NETWORK > NETWORK PORT > PRT IP ADDRESS***. Once the IP address is entered, try to load automatically the fields by clicking the **Read Order Code** button.
9. Enter the relay Slave address and Modbus Port address values from the settings in the front panel ***SETTINGS > PRODUCT SETUP > COMMUNICATIONS > MODBUS PROTOCOL*** menu.
10. If using a gateway to connect to the device, select **Yes** from the drop-down list.
11. Click the **Read Order Code** button to connect to the device and upload the order code. If the device was entered already, a message displays "`Device 'x' is also using IP address....`" If a

communications error occurs, ensure that the values entered in the previous steps correspond to the relay setting values, and also ensure that the same IP address is not assigned to multiple ports.

12. Click the **OK** button when the relay order code has been received. The new site and device are added to the Online Window.

The device has now been configured for Ethernet communications.

4.9.6 CONFIGURE MODEM CONNECTION

A modem connection allows a computer to communicate with a UR device over phone lines. Two modems are required. One modem is connected to the UR device, either by connecting the serial cable to the front panel port or through a RS485 box to the rear terminals of the UR device. The second modem is connected to the computer that initiates the connection.

To add a UR device for modem connections:

1. Connect the modems to the computer and UR.
2. Start the EnerVista UR Setup software, or in EnerVista Launchpad select the UR device to start the software.
3. Click the **Device Setup** button. The window opens.
4. Click the **Add Site** button. A new category is added. Enter a site name in the **Site Name** field. Optionally add a short description of the site, such as the address or intersection.
5. Click the **Add Device** button. A new device is added.
6. Enter a name in the **Device Name** field, up to 16 characters, and optionally add a description of the site. The **Color** is for the text in the device list in the Online Window.
7. Select “Modem” from the **Interface** drop-down list. This displays a number of interface parameters that must be entered.
8. Select "Generic Modem" from the **Modem Name** drop-down list, then enter the phone number to dial to establish communication with the remote modem.

   Post Terminal Window — Enable this option if you have a Schweitzer Engineering (SEL) SEL-203x Communications Processor, such as an SEL-2030 or SEL-2032. It enables display of a terminal window to allow interaction with the other device.
9. Once the phone number is entered, try to load automatically the device information by clicking the Read Order Code button.
10. Click the **OK** button when the relay order code has been received. The new device is added to the Online window.

The UR device has now been added to the software.

4.9.7 AUTOMATIC DISCOVERY OF UR DEVICES

The EnerVista UR Setup software can find and communicate to all UR-family devices located on an Ethernet network.

Using the **Discover** button in the **Device Setup** window, a single click of the mouse triggers the software to detect any URs located on the network. This is done by searching a range of IP addresses based on the subnet mask of the computer.

When a UR device is detected, the EnerVista UR Setup software proceeds to configure all settings and order code options in the window. This feature allows the user to identify and interrogate all UR devices at a location.

Examples of address ranges are as follows:

Example 1: Host IP address is 3.94.247.10 with a subnet mask of 255.255.252.0

Host’s subnet is 3.94.244.0

Possible IP addresses in this subnet are:

- 3.94.244.1 to 254
- 3.94.245.1 to 254
- 3.94.246.1 to 254
- 3.94.247.1 to 254

The discover function scans all those possible IP addresses to detect UR relays.

Example 2: Host IP address is 3.94.247.145 with a subnet mask of 255.255.252.128

Host's subnet is 3.94.247.128

Possible IP addresses in this subnet are:

- 3.94.247.128 to 3.94.248.254

The discover function scans all those possible IP addresses to detect UR relays.

To automatically add UR devices:

1. In the EnerVista software, click the **Device Setup** button. The window opens.
2. Click the **Discover** button. The software searches for UR devices on the computer subnet and adds any found to the Online Window area. If a required device is not found, add it manually as outlined earlier.

4.10 CONNECT TO THE RELAY

There are four ways to the connect to the device, as follows:

- RS232 or USB port (outlined here)
- RS485 port
- Ethernet port (outlined here)
- LAN

When unable to connect because of an access violation, access **Device Setup** and refresh the order code for the device.

When unable to connect, ensure that the same IP address is not assigned to multiple ports, for example under **Settings > Product Setup > Communications > Network**.

If still unable to connect, try unplugging and replugging the Ethernet connection. If that does not work, try to ping the device from the computer, and if unsuccessful, restart the computer.

When multiple computers are connected to a relay, EnerVista settings windows are not updated automatically. They are refreshed when re-opened. If a user changes a setting on one computer, the other users need to refresh the display by closing and opening the settings window to see the change. To ensure that current settings are always viewed, close settings windows when not in use so that they are up-to-date when next accessed.

4.10.1 CONNECT TO THE RELAY IN ENERVISTA

To access the relay in EnerVista:

1. Open the **Settings > Product Setup > Display Properties** window as shown. The window opens with a status indicator on the lower left of the EnerVista UR Setup window.

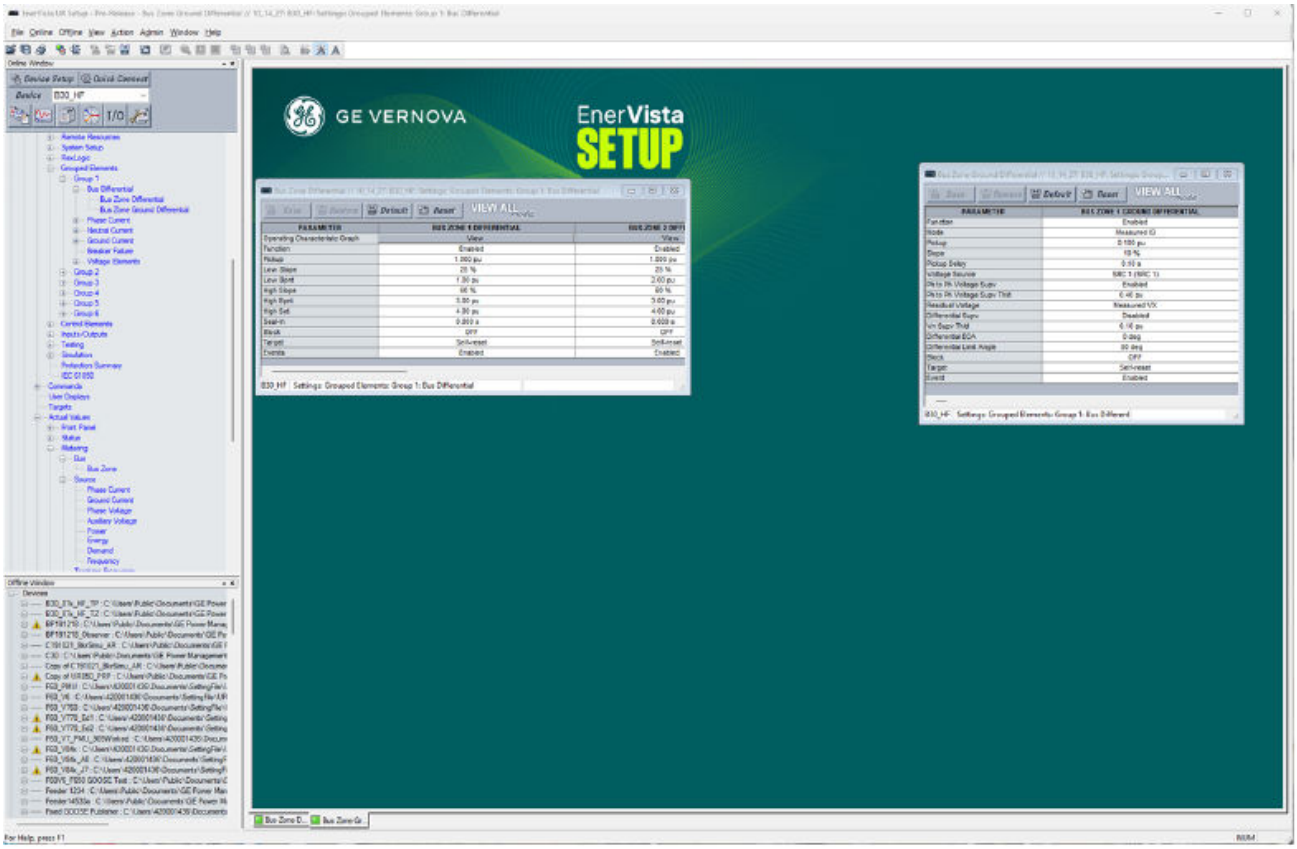

842743A4

2. If the status indicator is red, verify that the Ethernet network cable is properly connected to the Ethernet port on the back of the relay and that the relay has been properly set up for communication.
3. If a relay icon appears in place of the status indicator, then a report (such as an oscillography or event record) is open. Close the report to re-display the green status indicator.
4. The Display Properties settings can now be viewed, edited, or printed.

Quick action hot links

The EnerVista UR Setup software has several quick action buttons to provide instant access to several functions that are performed often when using URs. From the online window, users can select the relay to interrogate from a pull-down window, then click the button for the action to perform. The following quick action functions are available:

- View the event record
- View the last recorded oscillography record
- View the protection summary
- View all of the metering values
- View the status of all inputs and outputs
- Generate a service report

4.10.2 USE QUICK CONNECT VIA FRONT RS232 PORT

This feature applies to the enhanced and basic front panels.

To connect to the UR from a computer using a serial cable:

1. Connect an RS232 serial cable to the computer and the front panel RS232 port. For example, use a USB-to-serial RS232 DB9M converter cable when connecting to the USB port on the computer. If using Windows 10

and a GE USB-to-Serial Cable Converter (part number 0100-0001) connected between a USB port on the computer and the front serial port on the UR, use the Prolific driver version 3.2.0.0 from the Internet.

2. Start the EnerVista UR Setup software, or in EnerVista Launchpad select the UR device to start the software.
3. Click the **Quick Connect** button. The window opens.
4. Select the serial Interface and the communications port from the drop-down lists, then click **Connect**. The COM Port is that of the computer.
5. The EnerVista software creates a site named “Quick Connect” with a corresponding device also named “Quick Connect” and displays them in the Online Window. Expand the sections to view data directly from the UR device. Use the **Device Setup** button to change the site name.

Each time that the EnerVista UR Setup software is initialized, click the **Quick Connect** button to establish direct communications to the relay. This ensures that configuration of the EnerVista UR Setup software matches the relay model number.

4.10.3 USE QUICK CONNECT VIA FRONT USB PORT

This feature applies to the graphical front panel.

To connect to the UR from a computer using a USB cable:

1. Connect the cable to the computer and the front panel USB port (square connector).
2. Start the EnerVista UR Setup software, or in EnerVista Launchpad select the UR device to start the software.
3. Click the **Quick Connect** button to open the window.
4. Select the USB Interface and the **GE Virtual Serial Port** driver from the drop-down list, then click **Connect**. If the GE driver does not display, it means that the USB cable was connected on Windows 10 when upgrading the UR software. You need to re-install the EnerVista software with the USB cable disconnected.
5. The EnerVista software creates a site named “Quick Connect” with a corresponding device also named “Quick Connect” and displays them in the Online Window. Expand the sections to view data directly from the UR device. Use the Device Setup button to change the site name.

Each time that the EnerVista UR Setup software is initialized, click the **Quick Connect** button to establish direct communications to the relay. This ensures that configuration of the EnerVista UR Setup software matches the relay model number.

4.10.4 USE QUICK CONNECT VIA A REAR ETHERNET PORT

To connect to a UR using an Ethernet cable:

1. In the EnerVista software, click the **Quick Connect** button. The window opens
2. Select the Ethernet interface and enter the IP address assigned to the relay, then click the **Connect** button. The EnerVista UR Setup software creates a site named “Quick Connect” with a corresponding device also named "Quick Connect" and displays them in the Online Window.
3. Expand the sections to view data directly from the relay. Use the **Device Setup** button to change the site name.

Each time that the EnerVista software is initialized, click the **Quick Connect** button to establish direct communications to the relay. This ensures that configuration of the EnerVista UR Setup software matches the relay model number.

4.11 SET UP CYBERSENTRY AND CHANGE DEFAULT PASSWORD

If and when first using CyberSentry security, use the following procedure for set up.

1. Log in to the relay as Administrator by using the VALUE keys on the front panel or through EnerVista connected serially (so that no IP address is required). If logging in through EnerVista choose Device authentication (see figure). Enter the default password `ChangeMe1#`. Note that the ***LOCK SETTINGS*** setting needs to be disabled (default) in the ***SETTINGS > PRODUCT SETUP > SECURITY > SUPERVISORY*** menu.
2. Enable the Supervisor role if you have a need for it.
3. Make any required changes in configuration, such as setting a valid IP address for communication over Ethernet.
4. Log out of the Administrator account by choosing None.

Next, device or server authentication can be chosen on the login screen, but the choice is available only in EnerVista. UseDevice authentication to log in using the five pre-configured roles (Administrator, Supervisor, Engineer, Operator, Observer, or Administrator and Supervisor when Device authentication is disabled). When using a serial connection, only Device authentication is supported. When Server authentication is required, characteristics for communication with a RADIUS server must be configured on the UR. This is possible only through the EnerVista software. The RADIUS server itself also must be configured. At the end of this instruction manual, the appendix called RADIUS Server Configuration gives an example of how to set up a simple RADIUS server. Once both the RADIUS server and the parameters for connecting the UR to the server have been configured, you can choose Server authentication on the login screen of EnerVista.

During the commissioning phase, you have the option to bypass the use of passwords. Do so by enabling the Bypass Access setting under **Settings > Product Setup > Security > Supervisory**. Be sure to disable this bypass setting after commissioning the device.

You can change the password for any role either from the front panel or through EnerVista. If using EnerVista, navigate to **Settings > Product Setup > Security**. Change the Local Administrator Password, for example. We strongly recommend that the password for the Administrator be changed from the default. Changing the passwords for the other three roles is optional.

4.12 IMPORT SETTINGS

The options are:

- Import settings from XML or CID file — Import all settings or a group of settings from an XML or CID file to a device in the Offline Window area. Examples are Control elements, FlexLogic operands, and System Setup settings. This feature uses a built-in import/export tool.
- Import settings from device files — Import a URS, IID, or CID file to a device in the Offline Window area.

4.12.1 IMPORT SETTINGS FROM XML FILE

All settings, groups of settings, and/or individual settings can be imported, such as System Setup, FlexLogic operands, inputs/outputs, protection, and Control elements. A built-in import/export tool is used.

Note the following behavior:

- Available in English only
- Works in the Offline Window area
- Supports older firmware versions too, such as 6.x
- Import must be to same version, such as 8.03 to 8.03
- Except for B90, import can be to a different product, such as L90 to D60; order codes do not need to match
- Setting must exist in target device
- Complete single-line diagram can be imported, not parts of it
- Engineer function/menu item is not included
- Order codes must match when applying settings from the Offline Window area to a live device in the Online Window area. For example, settings from a C30 in the Offline Window area cannot be applied directly to a live C60 device.

Note:
A B90 device can import settings only from another B90 device

For information on exporting, see the Maintenance chapter.

Features in the tool include:

- Ability to perform global import (**Import All** button), by current window (**Import** button), or individual setting (right-click)
- Can import from a different dataset, such as from Dataset 3 to Dataset 2
- When a setting is not present in the target device, it cannot be selected/activated for the import device and the **Import** button is inactive
- Use the search box at the top-left to locate setting names and values, highlighted in blue
- Use the **Compare by Lines** and **Compare VOs** drop-down lists to sort display of FlexLogic equations
- Use the **Left Entry From** / **Left Entry To** boxes to display select rows
- Enable the **Synchronous Scrolling** check box to lock scrolling for target and import devices
- Add rows by right-clicking; validation is done later by the software
- Use the **Comparison Report** button to view quickly all differences, whether saved or not
- Use the **Target Device Report** to view quickly the imported settings, whether saved or not
- Click the **Save** button to save imports, otherwise none are

The following procedures outline how to import settings, apply to a live device, compare settings, and view imported settings.

To import settings:

1. In EnerVista, right-click the device in the Offline Window area and select the Import Settings option. A window opens. If the device is not listed in the Offline Window area, right-click it in the Online Window area and select the **Add Device to Offline Window** option.
2. Select the XML file to import, and click the **Open** button. When the firmware versions differ, a message displays and the file cannot be imported.

   When the firmware versions match, a window opens that compares existing and import settings. Existing settings are on the left, and settings to be imported are on the right. The window for FlexLogic operands differs, allowing more granularity.

   When the order codes of the existing and imported setting files do not match, but both devices share the same function(s), then the comparison list shows the common settings instead of all the settings. For example, the distance protection function exists both in L90 and D60. The software allows importing L90 distance protection to D60 distance, and vice versa.

   With successful launch, the device with the settings to be imported displays on the right, and the targeted device to receive these settings is on the left. The differences are highlighted in orange. When check boxes are deselected on the right side, it means that there are no differences or that settings are not present in the target device. (For a summary, click the **Comparison Report** button at the top-right, as outlined in the next procedure.)

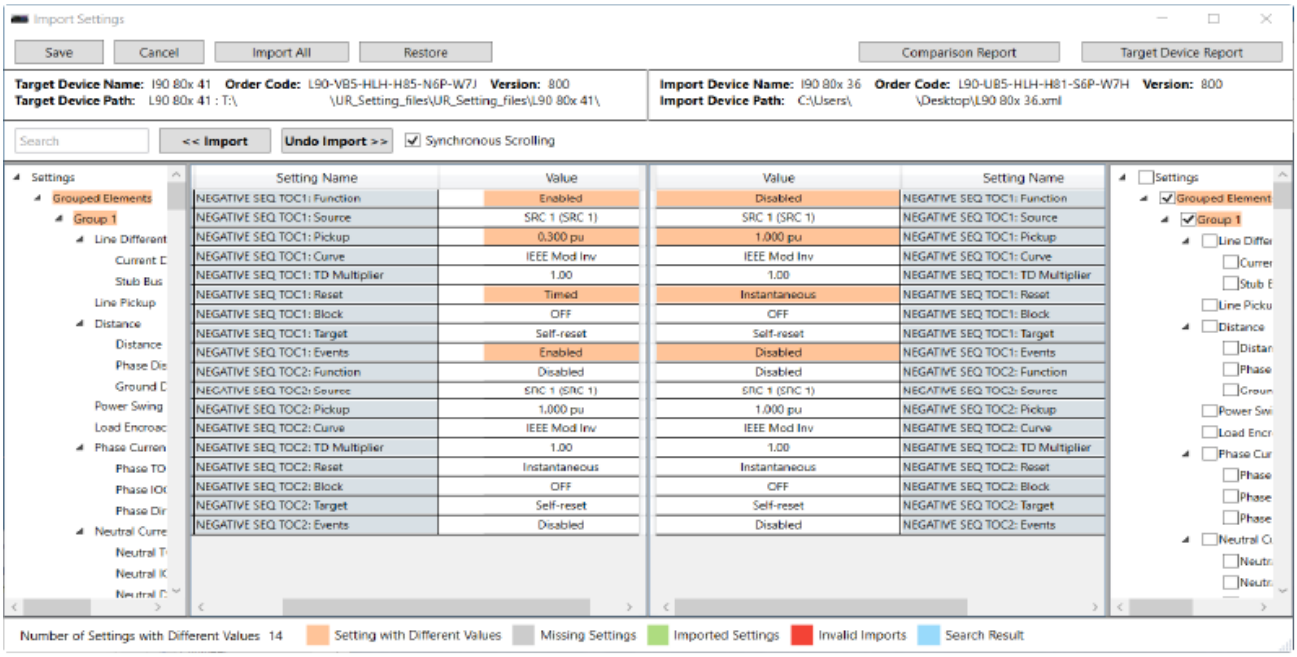

852744A1

3. Review the settings, either in the main window or using the Comparison Report.

   If required, deselect any settings on the right side that are no longer wanted for import.

   If required, copy any setting in the import device by right-clicking the value, selecting the Copy option, and Pasting it in the target setting field. Or select the **Import** option.
4. To filter FlexLogic operands, click the **Compare by Lines / Compare VOs** button to toggle.

   Compare by Lines — Displays FlexLogic operands 1 to 1024.

   Compare VOs — For virtual outputs, enable the check boxes of those wanted, for both the import and target devices.
5. To import the settings for the window currently active, click the **Import** button. Or to import all settings, click the **Import All** button. The settings are imported, as shown in green.

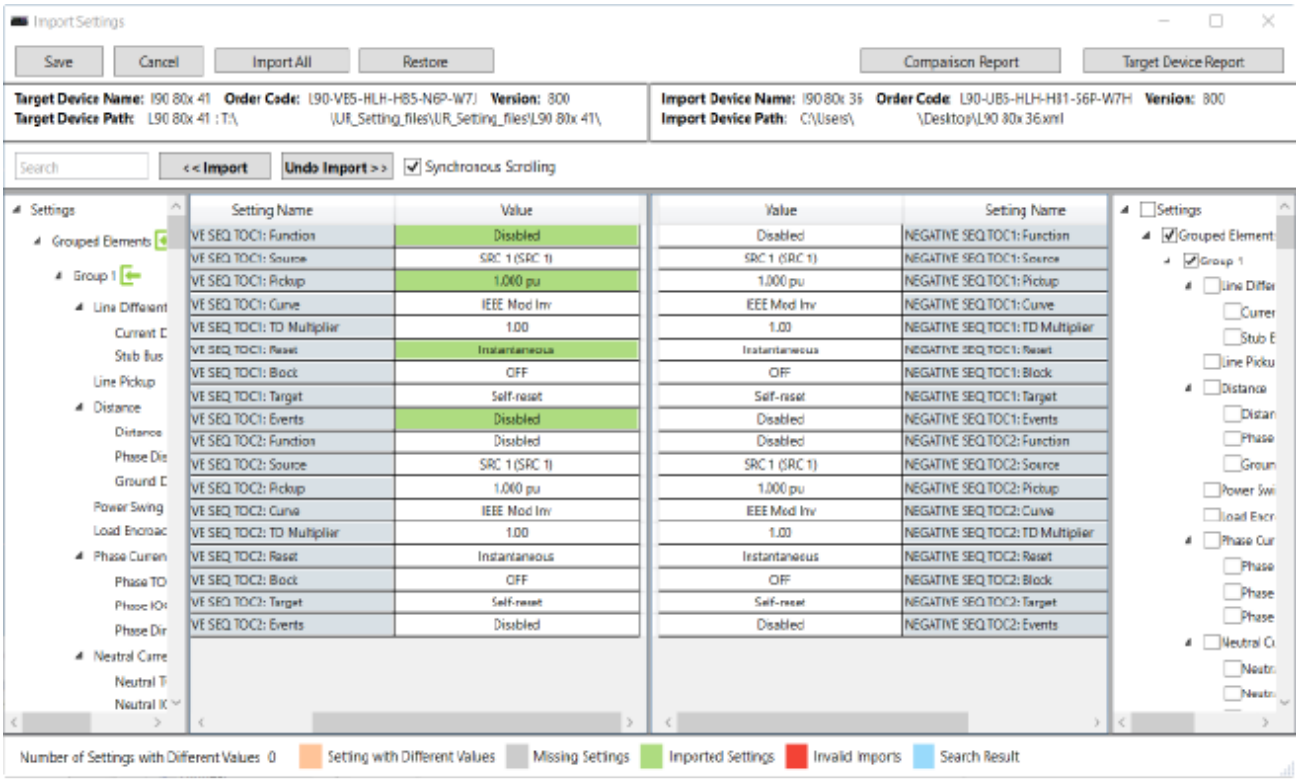

852745A1

6. If required, to undo an import, click the **Undo Import** button. Or, to undo an import and to refresh all entries to their original state, click the **Restore** button.
7. To save the changes, click the **Save** button and confirm at the prompt. Or to cancel all changes, click the **Cancel** button. The window closes.

To apply the settings to a live device:

1. Drag-and-drop the device entry from the Offline Window area to an entry in the Online Window area. Individual settings also can be dragged and dropped. The order codes must match.

To compare settings:

1. Click the **Comparison Report** button at the top-right of the window. This displays a summary of activity and includes following settings: different, missing, imported, and invalid.

   Number of Differences — The number of settings in the target device having setting values different from the import device

   Number of Missing Settings — The number of settings that are not found in the target device settings

   Number of Settings Imported — The number of settings imported in the target device

   Number of Invalid Settings — The number of settings that are same in both devices but the import device setting value is not within range (out-of-range) of the target device setpoint range. For example, a 'FuncName Block' setting is available in both import and target devices. The import device 'FuncName Block' setting is configured as '87L TRIP OPIOC 1 OP,' however operand '87L TRIP OPIOC 1 OP' is not within the range of the target device.
2. To save the display as an HTML file, click the **Save to File** button.

To view imported settings on the target device:

1. Click the **Target Device Report** button at the top-right of the window.

   When no settings have been imported yet, the window shows basic information about the receiving device, such as order code.

When settings have been imported, whether saved or not, a report displays. It is a comparison of the target device before and after import.

For invalid settings for the target device, a message displays, they are highlighted in red in the main window, and they are listed in red at the bottom of the window. This means that the target device does not have the feature and cannot accept the settings. In the example shown, the device does not have bus functions, so the settings are invalid. Scroll through the list to review the invalid settings. Note that the sets of invalid setting groups are highlighted in red on the left side of the window (not shown).

Setting Name	Value	Value	Setting Name
Trip Bus 1 Function	Enabled	Enabled	Trip Bus 1 Function
Trip Bus 1 Block	OFF	OFF	Trip Bus 1 Block
Trip Bus 1 Pickup Delay	0.00 s	0.00 s	Trip Bus 1 Pickup Delay
Trip Bus 1 Reset Delay	0.00 s	0.00 s	Trip Bus 1 Reset Delay
Trip Bus 1 Input 1	BUS 1 OP	BUS 1 OP	Trip Bus 1 Input 1
Trip Bus 1 Input 2	OFF	OFF	Trip Bus 1 Input 2
Trip Bus 1 Input 3	OFF	OFF	Trip Bus 1 Input 3
Trip Bus 1 Input 4	OFF	OFF	Trip Bus 1 Input 4
Trip Bus 1 Input 5	OFF	OFF	Trip Bus 1 Input 5
Trip Bus 1 Input 6	OFF	OFF	Trip Bus 1 Input 6
Trip Bus 1 Input 7	OFF	OFF	Trip Bus 1 Input 7
Trip Bus 1 Input 8	OFF	OFF	Trip Bus 1 Input 8
Trip Bus 1 Input 9	OFF	OFF	Trip Bus 1 Input 9
Trip Bus 1 Input 10	OFF	OFF	Trip Bus 1 Input 10

Error Screen Name	Error Setting Name	Error Message	Original Value
Trip Bus	Trip Bus 1 Input 1	Flexlogic value (BUS 1 OP) is invalid.	OFF
Trip Bus	Trip Bus 2 Input 1	Flexlogic value (BUS 2 OP) is invalid.	OFF
Trip Bus	Trip Bus 3 Input 1	Flexlogic value (BUS 3 OP) is invalid.	OFF

852746A1

To save the display as an HTML file, click the **Save to File** button.

4.12.2 IMPORT SETTINGS FROM DEVICE FILES

The following file types can be imported:

- URS — UR settings file (firmware version 7.3x or earlier)
- IID — Instantiated IED capability description file — Actual settings on UR
- CID — Configured IED description file — Settings sent to the UR (may or may not be actual settings). When using IEC 61850, network settings can also be configured by accepting a CID file that includes them, as long as the IP address of at least one port is manually configured in the relay before the CID file is sent and the IP address matches that in the file. The import is done in the Offline Window area.

To import a settings file:

1. In the Offline Window area, right-click the device and select the Add Device from File option. The device is that from which you want to import settings.
2. If required, change the Files of type drop-down list.

Select the file to import.

To apply the settings to a live device:

1. Drag-and-drop the device entry from the Offline Window area to its entry in the Online Window area. Individual settings also can be dragged and dropped. The order codes must match.

This is what happens:

- CID — For version 7.30 or later, a new URS file generates and moves into a new device folder, generating SCL files from the new URS file. Files in the folder have new time stamps. The CID file retains its time stamp.
- URS — When not using IEC 61850 and the version is lower than 7.30, the file is added and the time stamp is unchanged. When clicking on the tree element, a device folder is created, the original file moves into it, and the time stamp is on the URS file is retained.

  When version is 7.30 or later, with IEC61850 is us, the file is added and the time stamp is unchanged. When clicking on the tree element, a device folder is created, the original file moves into it, SCL files are generated there, and the "Last modified" time stamp on the URS file changes.

4.13 CONNECT TO SUBSTATION GATEWAY

A D400 Substation Gateway can be used to collect data from UR devices in a local area network (LAN). It collects metering, status, event, and fault report data from serial or LAN-based intelligent substation devices, and it pre-processes the data. The D400 supports up to 16 serial and eight network connections, with multiple devices possible on each serial connection. Up to 10 concurrent file transfer sessions are possible, meaning data for up to 10 URs can be transferred at the same time and any additional IEDs are queued on a first-come-first-served basis. The D400 can then upload files to a demilitarized zone (DMZ) server at the enterprise level.

Setup is as follows. For UR devices with the CyberSentry software option, when there is a need to retrieve periodically the logs from the UR securely without a human interface, the following approach can be used. See the D400 manual for configuration details to achieve it. A UR in the substation can authenticate a user either connecting to a RADIUS server or on the device itself. This depends on the user name used for authentication on a connection. The D400 connects to the UR device using an Ethernet, USB, or serial port on the UR. At the other end, the cable attaches to the rear of D400. Use the D400 software to configure a serial or network communication/connection for the UR, then to configure the IED device blocks/clients for the UR, and then to configure record retrieval. Once configured, the UR and D400 use a keyfile authentication mechanism to establish communication.

For UR devices with the IEC 61850 software option, also use the D400 IEC 61850 Loader software.

When a D400 detects new files available for download from a UR, it connects to the UR and reads the files via Secure File Transfer Protocol (SFTP) protocol. The following files can be transferred:

- Oscillography files
- Event records
- Log files
- Configuration (setting) files

The D400 information is viewable in its software and in a web browser.

> *Note:*
> *The D400 is discontinued and no longer offered. The G500 is a replacement to the D400, where the same file retrieval services and cybersecurity connection can be used.*

4.13.1 FILES AND RECORDS

Oscillography files are stored in COMTRADE format in the D400 folder system using the UR site and device name.

Event records are stored as the EVT.TXT file in the D400 folder system using the UR site and device name.

Log files can be retrieved for UR 7.0 and later. The following file types are possible, stored in the D400 folder system using the UR site and device name:

- `factory_event.txt` — Information about change methods and origins. Saved with a "_YYMMDDhhmmss" retrieval time stamp, for example FACTORY_EVENT_170525183124.TXT.
- `setting_changes.log` — Information on what settings have been changed. Saved with a "_YYMMDDhhmmss" retrieval time stamp, for example `SETTING_CHANGES_170525183124.TXT`.

Setting files are the configuration/settings files in the IEC 61850 SCL/IID format. The ur.iid file is saved with a "_YYMMDDhhmmss" retrieval time stamp, for example `ur_170525183124.iid`. It is stored in the D400 folder system using the UR site and device name.

CHAPTER 5

INTERFACES

5.1 CHAPTER OVERVIEW

This chapter contains the following sections:

Chapter Overview 146
EnerVista 147
Front panel 168
Logic diagrams 224
FlexLogic 226

5.2 ENERVISTA

5.2.1 ENERVISTA INTRODUCTION

The EnerVista UR Setup software provides a single facility to configure, monitor, maintain, and troubleshoot relays connected over local or wide-area networks. It can be used while disconnected (offline) or connected (online) to a relay. In offline mode, you can create settings files for eventual downloading to the device. In online mode, communication with the device is real-time.

The EnerVista UR Setup software is provided with every UR relay. This chapter outlines the EnerVista software interface. The EnerVista Setup help file in the software also provides details for getting started and using the software interface.

5.2.2 SETTINGS FILES

The EnerVista software supports the following ways of handling changes to relay settings:

- In offline mode (relay disconnected) to create or edit relay settings files for later transfer to relays
- While connected to a relay to modify relay settings, and then save the settings to the relay
- Create/edit settings files and then write them to the relay while connected to the relay

See the back up section in the Maintenance chapter for instructions on how to create a settings file either offline or online.

Settings files are organized on the basis of file names assigned by the user. A settings file contains data pertaining to the following types of relay settings:

- Device definition
- Product setup
- System setup (not in C30, D60)
- FlexLogic
- Grouped elements (not in C30, D60)
- Control elements
- Inputs/outputs
- Remote resources
- Testing

Factory default values are supplied and can be restored after any changes.

The following communications settings are not transferred to the relay with settings files:

- Modbus Slave Address
- Modbus TCP Port Number
- RS485 COM2 Baud Rate
- RS485 COM2 Parity
- COM2 Minimum Response Time
- COM2 Selection
- RRTD Slave Address
- RRTD Baud Rate
- IP Address (see end of previous chapter for information)
- IP Subnet Mask
- IP Routing

When a settings file is loaded to a relay that is in-service, the following sequence occurs:

1. The relay takes itself out of service.
2. The relay issues a `UNIT NOT PROGRAMMED` major self-test error.
3. The relay closes the critical fail contact.

The Maintenance chapter outlines how to use a settings file in the `.urs` format for backup and restore.

5.2.3 EVENT VIEWING

In online or offline mode, you can view and analyze data generated by triggered parameters as follows:

- **Event recorder** — The event recorder captures contextual data associated with the last 1024 events, listed chronologically from most recent to oldest. Event records are viewable at software and device-specific levels. Access this under **Admin > Event Log > View**.
- **Oscillography** — The oscillography waveform traces and digital states are used to provide a visual display of power system and relay operation data captured during specific triggered events. Access this latter under **Actual Values > Records > Event Record**.

The following table outlines some software-level entries.

Event	Description
EnerVista UR Setup SESSION STARTED	The EnerVista software was launched
Language was changed	The user changed the software language using the **View > Language** menu item
DEFAULT USERS CREATED	The user management window was launched using the **Admin > User** Management menu item
: Successful upload of firmware END Firmware verified Firmware uploaded Firmware erased START: Upload new firmware	The firmware on a device was upgraded
EnerVista UR Setup EVENT LOG CLEARED	The event record was cleared. All event records were deleted using the **Admin > Event Log > Clear** menu item

5.2.4 FILE SUPPORT

The following support applies, where the Settings List is at the bottom left and the Site List is at the top left of the EnerVista window.

- Execution — Any EnerVista UR Setup file that is opened launches the application or provides focus to the already opened application. If the file was a settings file (has a .urs extension) that had been removed from the Settings List navigation menu, it is added back to the menu.
- Drag and Drop — The device settings and individual settings can be dragged and dropped between the Online and Offline Window areas. Also, any Windows Explorer directory folder is a file drag source and drop target.

New files that are dropped into the Offline Window are added to the tree, which is automatically sorted alphabetically with respect to settings file names. In the Online Window, files or individual menu items that are dropped in the selected device menu are sent automatically to the online device.

5.2.5 MAIN WINDOW

The EnerVista UR Setup software window has the following components:

1. Title bar that shows the pathname of the active data view or the name of the software

2. Main window menu bar
3. Main window toolbar
4. Site list / online window area
5. Settings list / offline window area
6. Software windows, with common toolbar
7. Settings file data view windows, with common toolbar
8. Workspace area with data view tabs
9. Status bar
10. Quick action hot links

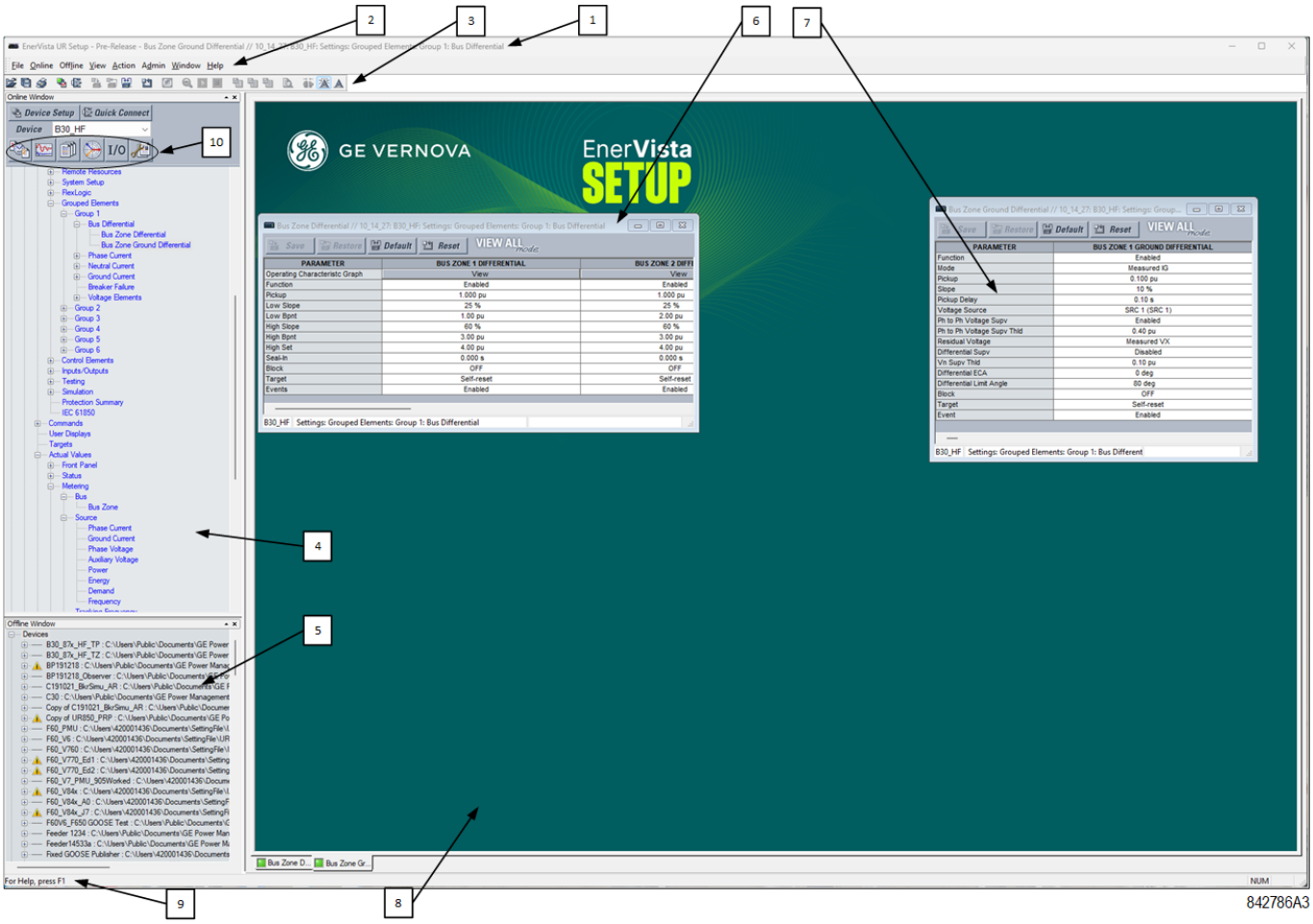

Figure 64: EnerVista UR Setup software window

When the Offline Window has devices saved to it, it includes a **Reserved** entry with spare settings when customer-specific functions are provided on a UR.

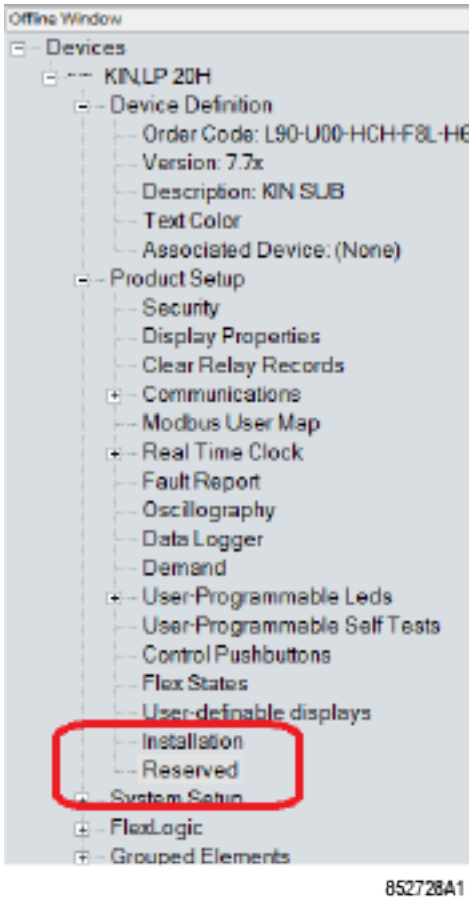

Figure 65: Reserved settings

5.2.6 PROTECTION SUMMARY WINDOW

The Protection Summary is a graphical user interface to manage elements, such as enabling and disabling them. Access it under **Settings > Protection Summary**. See the Settings chapter for information on use.

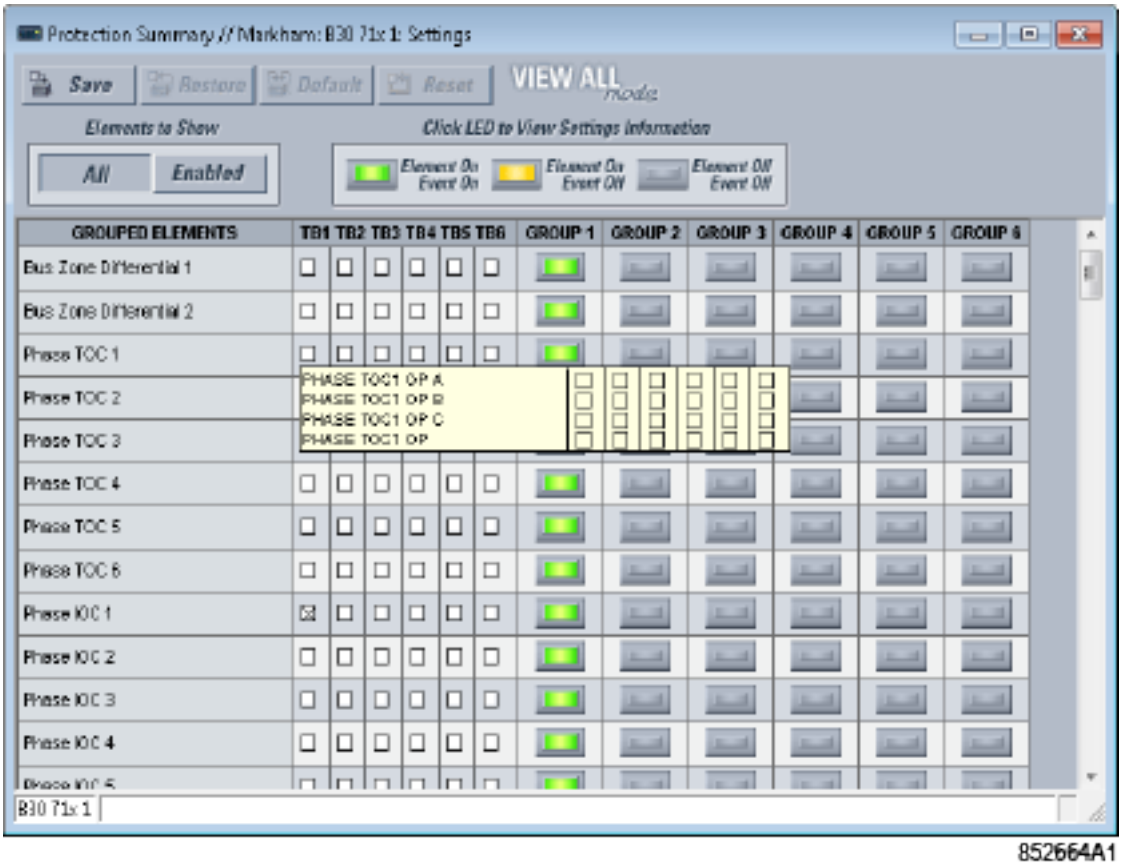

Figure 66: Protection Summary interface (B30 example shown)

5.2.7 SETTINGS TEMPLATES

Settings file templates simplify the configuration and commissioning of multiple relays that protect similar assets. An example is a substation that has 10 similar feeders protected by 10 UR F60 relays. In these situations, typically 90% or greater of the settings are identical among devices.

The templates allow engineers to configure and test these common settings, then lock them so that they are not available to users. For example, locked settings can be hidden from view for field engineers, allowing them to quickly identify and concentrate on specific settings.

The remaining settings (typically 10% or less) can be specified as editable and made available to field engineers installing the devices. These are settings such as protection element pickup values and CT and VT ratios.

The settings template mode allows the user to define which settings are visible in the software. Settings templates can be applied to both settings files (settings file templates) and online devices (online settings templates). The functionality is identical for both purposes.

Settings file conversion from previous firmware versions is supported.

> *Note:*
> *Note: Template mode is available in the English software only.*

5.2.7.1 ENABLE SETTINGS TEMPLATE

The settings file template feature is disabled by default. It can be enabled in offline or online mode.

In offline mode:

1. Locate the settings file in the Offline Window area of the EnerVista UR Setup software. If not there, a file can be added from an online device by right-clicking it and selecting the **Add Device to Offline Window** option.
2. In the Offline Window area, right-click the selected device or settings file and select the **Template Mode > Create Template** option.

The settings file template is now enabled and the file menus display in light blue. The settings file is now in template editing mode. To undo the action, select **Template Mode > Remove Templat**e

In online mode:

1. Locate the device in the Online Window area of the EnerVista UR Setup software.
2. Right-click the device and select the **Template Mode > Create Template option**. The software prompts for a template password. This password is required to use the template feature and must be at least four characters in length.
3. Enter and re-enter the new password, then click OK to continue.

The online settings template is now enabled. The device is now in template editing mode.

5.2.7.2 EDIT SETTINGS TEMPLATE

The settings template editing feature allows you to specify which settings are available for viewing and modification in EnerVista UR Setup. By default, all settings except the FlexLogic equation editor settings are locked.

1. With the template already enabled, locate the device or settings file in the Online or Offline Window area in the software.
2. Right-click the device or file and select the **Template Mode > Edit Template** option to verify or place the device in template editing mode (check mark beside option). If prompted, enter the template password then click **OK**.
3. Open the relevant settings window that contains settings to be specified as viewable.

By default, all settings are specified as locked and displayed against a gray background. The icon on the upper right of the settings window indicates that the EnerVista software is in EDIT mode. The following example shows the phase time overcurrent settings window in Edit mode.

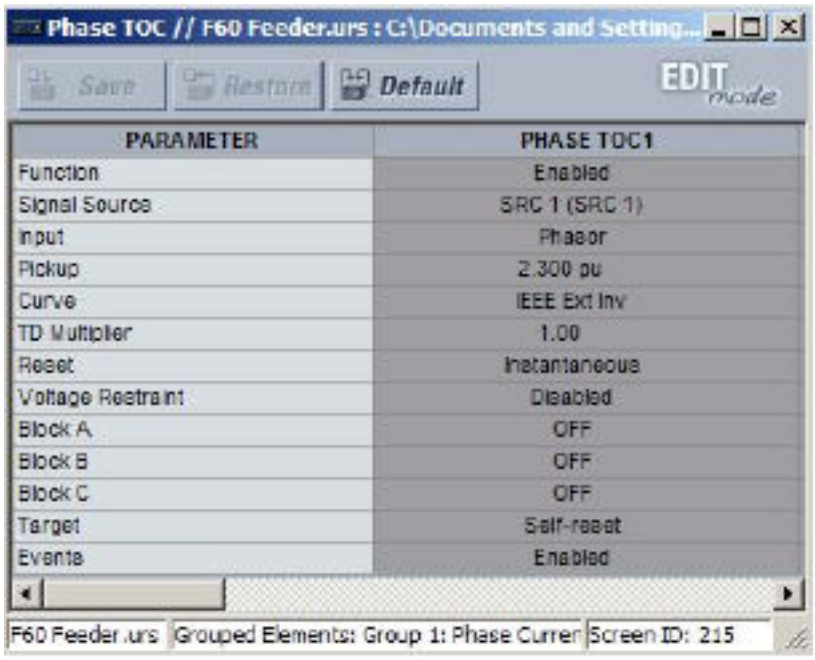

Figure 67: Settings template with all settings specified as locked

1. Specify the settings to make viewable by clicking them. They will show with a yellow background

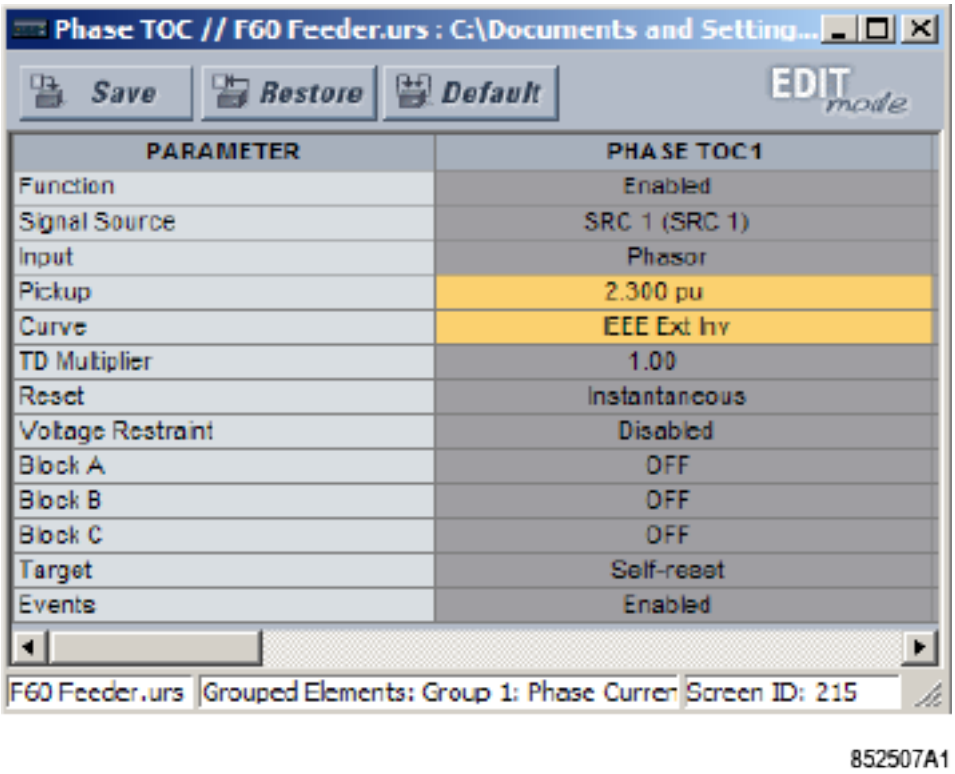

Figure 68: Settings template with two settings specified as editable

2. Click the **Save** button to save changes to the settings template.
3. Continue through any other settings window to specify all viewable settings.

The next time that the device/settings are accessed, only those specified as viewable/editable display in the menu hierarchy.

5.2.7.3 ADD PASSWORD PROTECTION

We recommend that you save templates with password protection to maximize security. When templates are created for online settings, the password is added during the initial template creation step. It does not need to be added after the template is created.

To add password protection to a settings file template:

1. In the Offline Window area, right-click the device and select the **Template Mode > Password Protect Template** option. The software prompts for a template password. This password must be at least four characters in length.
2. Enter and re-enter the new password, then click **OK** to continue.

The settings file template is now secured with password protection.

5.2.7.4 VIEW SETTINGS TEMPLATE

Once all necessary settings are specified for viewing, users are able to view the settings template on the online device or settings file. There are two ways to specify the settings view with the settings template feature:

- Display only those settings available for editing
- Display all settings, with settings not available for editing grayed-out

To display settings available for editing:

1. Right-click the device in the Online or Offline Window area and apply the template by selecting the **Template Mode > View In Template Mode** option.
2. Enter the template password if prompted, then click **OK** to apply the template.

Once the template has been applied, users are limited to view and edit the settings specified by the template. The effect of applying the template to the phase time overcurrent settings is shown.

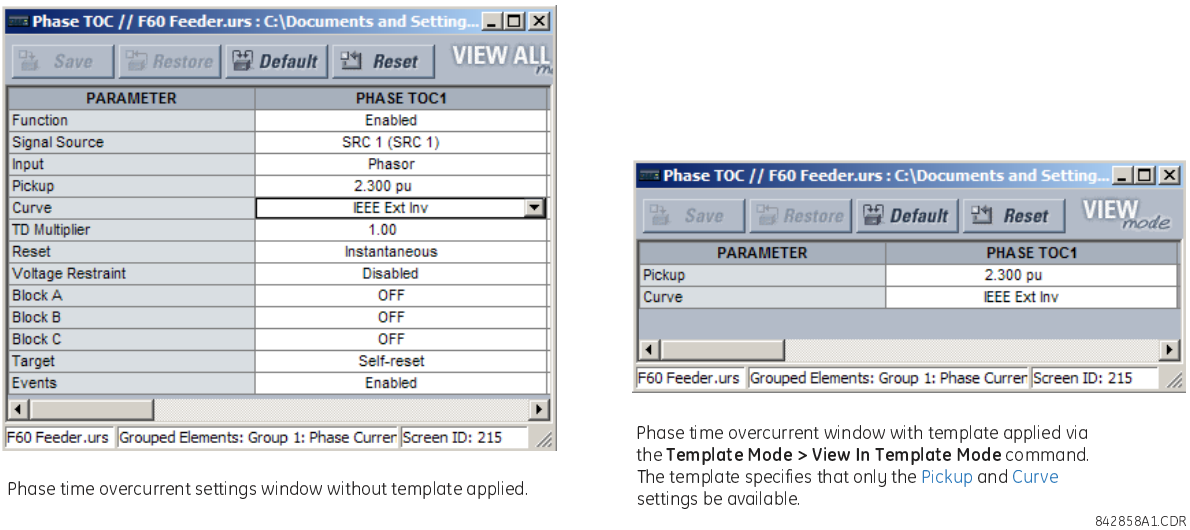

Phase time overcurrent settings window without template applied.

Phase time overcurrent window with template applied via the **Template Mode > View In Template Mode** command. The template specifies that only the Pickup and Curve settings be available.

842858A1.CDR

Figure 69: Applying templates using the View in Template Mode command

Viewing the settings in template mode also modifies the settings menu, showing only the settings categories that contain

Typical settings tree view without template applied.

Typical settings tree view with template applied via the **Template Mode > View In Template Mode** command.

842860A1.CDR

Figure 70: Applying templates using the View in Template Mode settings command

To display settings available for editing and settings locked by the template:

1. Right-click the device in the Online or Offline Window area and apply the template by selecting the **Template Mode > View All Settings** option.
2. Enter the template password then click **OK** to apply the template.

Once the template has been applied, users are limited to edit the settings specified by the template, but all settings are shown. The effect of applying the template to the phase time overcurrent settings is shown as follows.

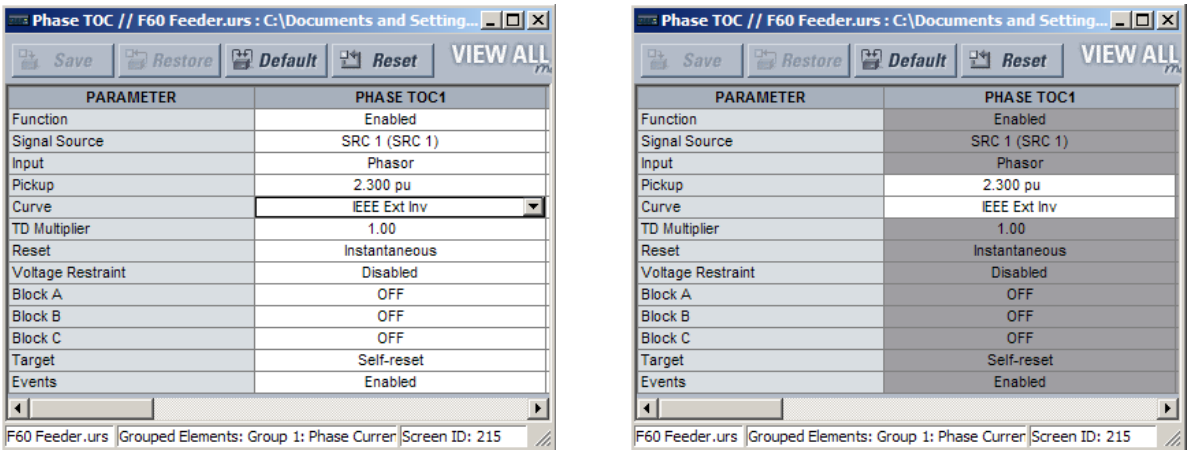

Phase time overcurrent settings window without template applied.

Phase time overcurrent window with template applied via the **Template Mode > View All Settings** command. The template specifies that only the Pickup and Curve settings be available.

842859A1.CDR

Figure 71: Applying templates using the View All Settings command

5.2.7.5 REMOVE SETTINGS TEMPLATE

Once a settings template is removed, it cannot be reapplied and a new settings template needs to be defined before use.

1. Right-click the device in the Online or Offline Window area and select the **Template Mode > Remove Template** option.
2. Enter the template password if prompted and click **OK** to continue.
3. The EnerVista software removes all template information and all settings are available3. Confirm that you want to remove the template by clicking **Yes**.

The EnerVista software removes all template information and all settings are available.

5.2.8 SECURING FLEXLOGIC EQUATIONS

The UR allows users to secure some or all FlexLogic equations, preventing unauthorized viewing or modification of critical FlexLogic applications. This is accomplished using the settings template feature to lock individual entries within FlexLogic equations.

Secured FlexLogic equations remain secure when files are sent to and retrieved from any UR-series device.

Locking can be tied to the serial number too.

5.2.8.1 LOCKING ENTRIES IN A SETTINGS TEMPLATE

To lock individual entries of a FlexLogic equation:

1. Right-click the settings file or online device and select the **Template Mode > Create Template** item to enable the settings template feature.
2. If prompted, enter the template password.
3. Select the **FlexLogic > FlexLogic Equation Editor** settings menu item. By default, all FlexLogic entries are specified as viewable and display against a yellow background. The icon on the upper right of the window also indicates that EnerVista UR Setup is in EDIT mode.
4. Specify the entries to lock by clicking them. The locked entries display a gray background as shown in the example.

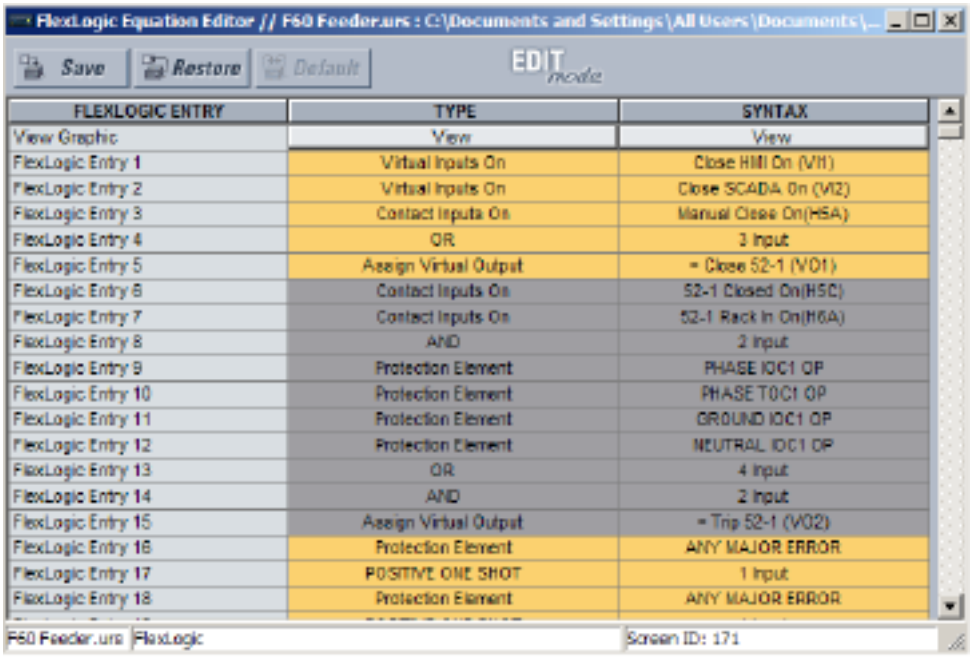

Figure 72: Locking FlexLogic equation entries in Edit Mode

5. Click the Save button to save and apply changes to the settings template.
6. Select the **Template Mode > View In Template Mode** option to view the template.
7. Optionally apply a password to the template by right-clicking the device and selecting the **Template Mode > Password Protect Template** option.

Once the template has been applied, users are limited to view and edit the FlexLogic entries not locked by the template. The effect of applying the template to the FlexLogic entries is shown here.

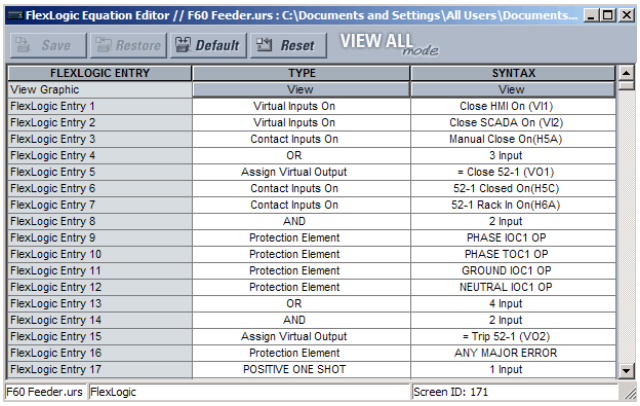

FLEXLOGIC ENTRY	TYPE	SYNTAX
View Graphic	View	View
FlexLogic Entry 1	Virtual Inputs On	Close HMI On (VI1)
FlexLogic Entry 2	Virtual Inputs On	Close SCADA On (VI2)
FlexLogic Entry 3	Contact Inputs On	Manual Close On(H5A)
FlexLogic Entry 4	OR	3 Input
FlexLogic Entry 5	Assign Virtual Output	= Close 52-1 (VO1)
FlexLogic Entry 6	Contact Inputs On	52-1 Closed On(H5C)
FlexLogic Entry 7	Contact Inputs On	52-1 Rack In On(H6A)
FlexLogic Entry 8	AND	2 Input
FlexLogic Entry 9	Protection Element	PHASE IOC1 OP
FlexLogic Entry 10	Protection Element	PHASE TOC1 OP
FlexLogic Entry 11	Protection Element	GROUND IOC1 OP
FlexLogic Entry 12	Protection Element	NEUTRAL IOC1 OP
FlexLogic Entry 13	OR	4 Input
FlexLogic Entry 14	AND	2 Input
FlexLogic Entry 15	Assign Virtual Output	= Trip 52-1 (VO2)
FlexLogic Entry 16	Protection Element	ANY MAJOR ERROR
FlexLogic Entry 17	POSITIVE ONE SHOT	1 Input

Typical FlexLogic™ entries without template applied.

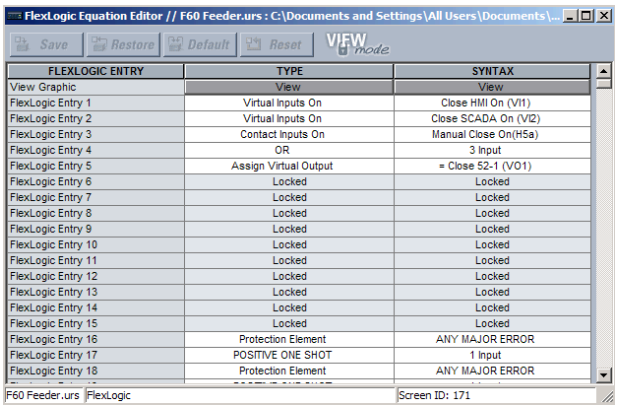

FLEXLOGIC ENTRY	TYPE	SYNTAX
View Graphic	View	View
FlexLogic Entry 1	Virtual Inputs On	Close HMI On (VI1)
FlexLogic Entry 2	Virtual Inputs On	Close SCADA On (VI2)
FlexLogic Entry 3	Contact Inputs On	Manual Close On(H5a)
FlexLogic Entry 4	OR	3 Input
FlexLogic Entry 5	Assign Virtual Output	= Close 52-1 (VO1)
FlexLogic Entry 6	Locked	Locked
FlexLogic Entry 7	Locked	Locked
FlexLogic Entry 8	Locked	Locked
FlexLogic Entry 9	Locked	Locked
FlexLogic Entry 10	Locked	Locked
FlexLogic Entry 11	Locked	Locked
FlexLogic Entry 12	Locked	Locked
FlexLogic Entry 13	Locked	Locked
FlexLogic Entry 14	Locked	Locked
FlexLogic Entry 15	Locked	Locked
FlexLogic Entry 16	Protection Element	ANY MAJOR ERROR
FlexLogic Entry 17	POSITIVE ONE SHOT	1 Input
FlexLogic Entry 18	Protection Element	ANY MAJOR ERROR

Typical FlexLogic™ entries locked with template via the **Template Mode > View In Template Mode** command.

842861A1.CDR

Figure 73: Locking FlexLogic entries through settings templates

The FlexLogic entries are also shown as locked in the graphical view and on the front panel display.

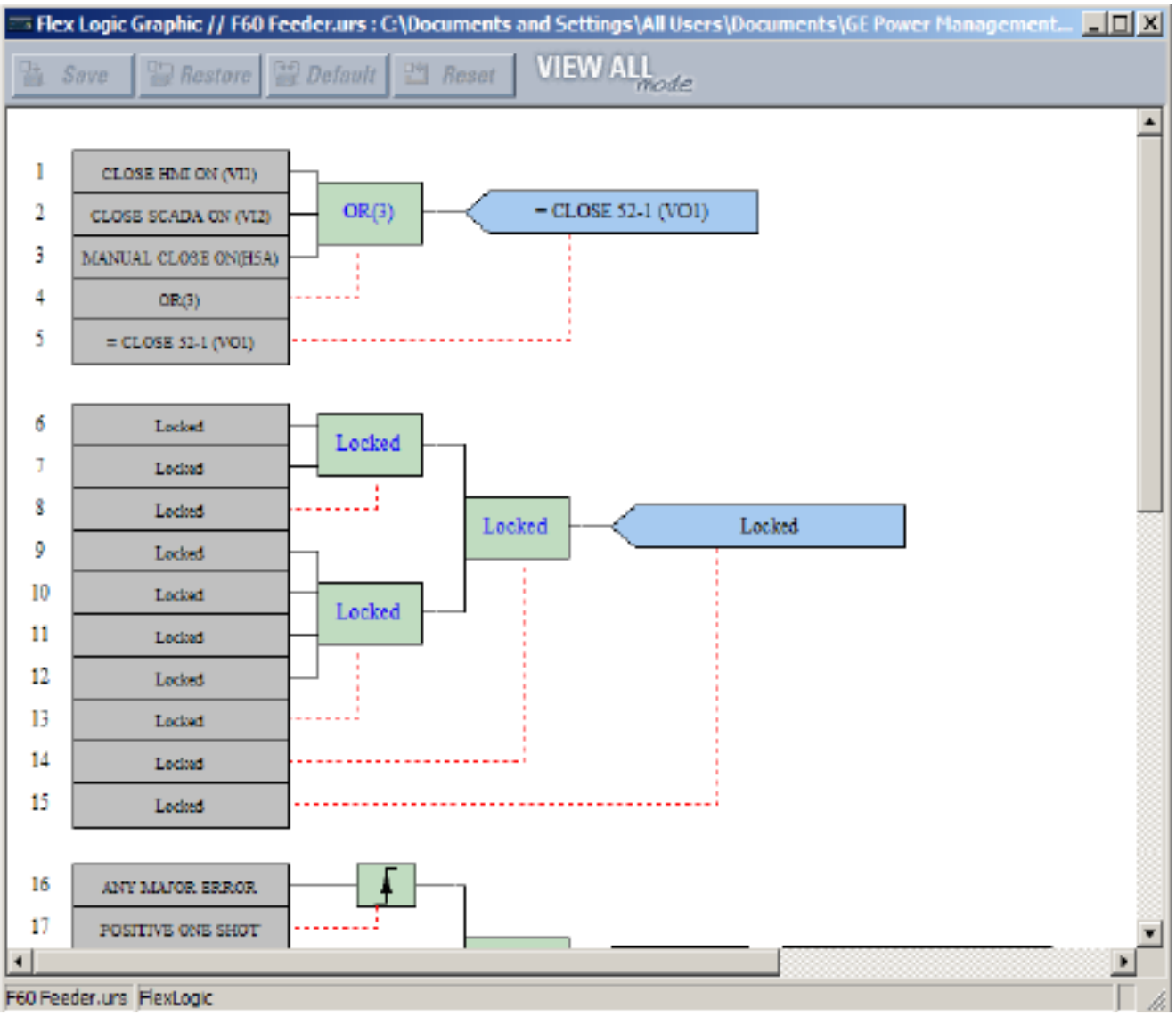

852518A1

Figure 74: Secured FlexLogic in graphical view

5.2.8.2 LOCKING A SETTINGS FILE TO A SERIAL NUMBER

A settings file and associated FlexLogic equations also can be locked to a UR serial number. Once FlexLogic entries in a settings file have been secured, use the following procedure to lock the settings file to a serial number. A serial number is viewable under **Actual Values > Product Info > Model Information**, the inside front panel, and the rear of the device.

1. Right-click the setting file in the Offline Window area and select the **Edit Device Properties** item. The window opens.

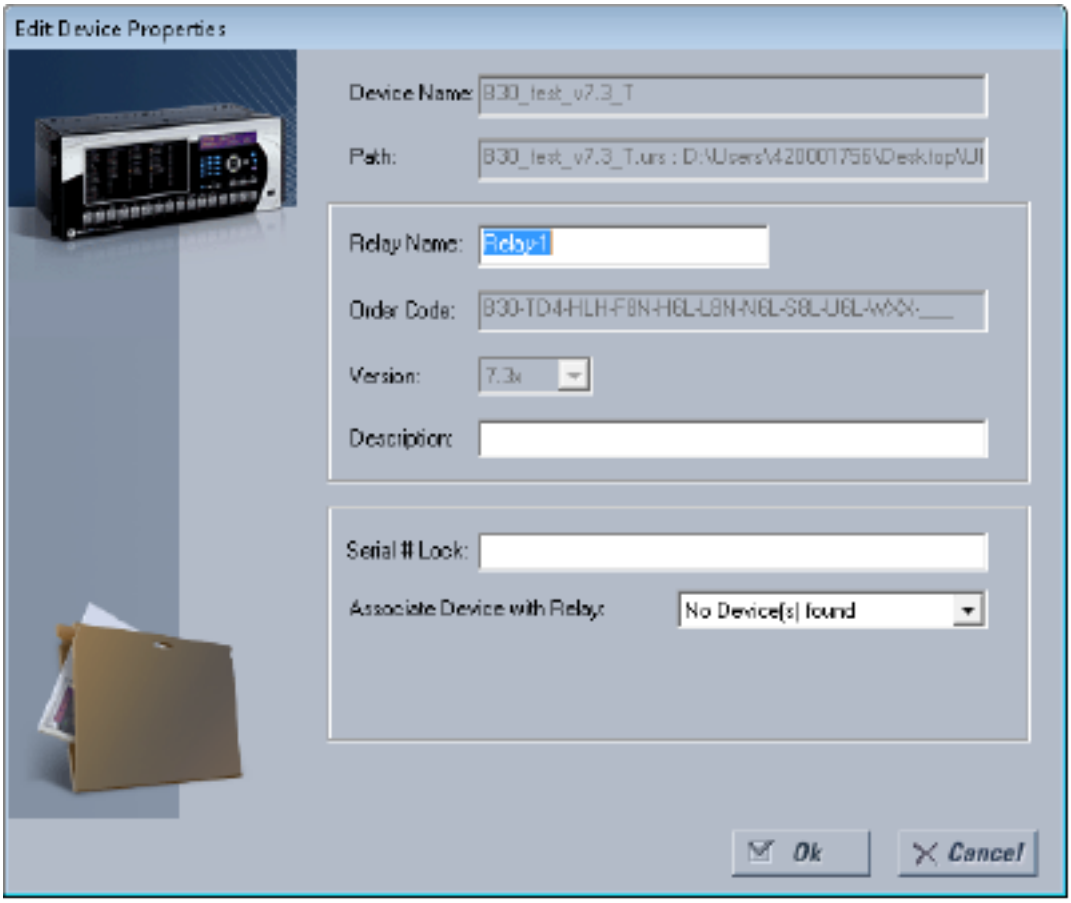

852520A2

Figure 75: Settings file properties window

2. Enter the serial number of the relay to lock to the settings file in the **Serial # Lock** field.
3. Click the OK button to apply the change. The serial number is not validated. The settings file and corresponding secure FlexLogic equations are now locked to the device specified by the serial number.

5.2.9 SETTINGS FILE TRACEABILITY

A traceability feature for settings files allows the user to quickly determine if the settings in a device have been changed since the time of installation from a settings file. When a settings file is transferred to a device, the date, time, and serial number are sent back to the EnerVista Setup and added to the settings file on the local computer. This information can be compared with the relay actual values at any later date to determine if security has been compromised.

The traceability information is only included in the settings file if a complete settings file is either transferred to the device or obtained from the device. Any partial settings transfers by way of drag and drop do not add the traceability information to the settings file.

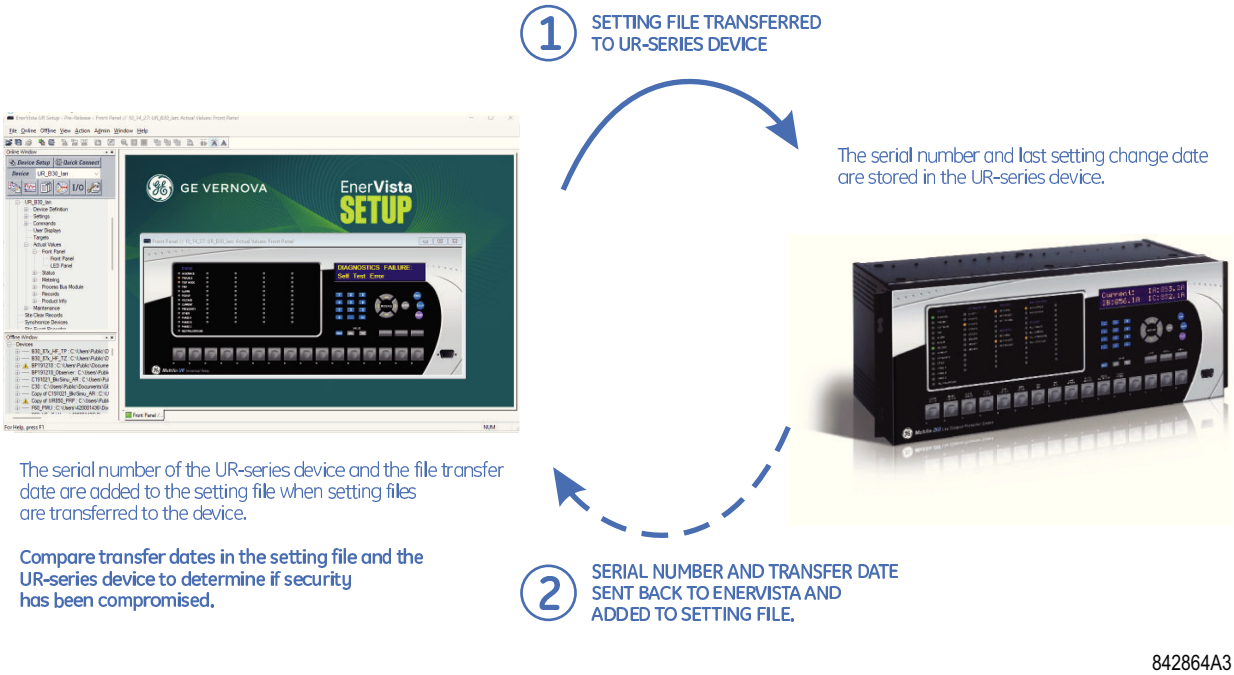

Figure 76: Settings file traceability

With reference to the above figure, the traceability feature is used as follows.

- The transfer date of a settings file is logged in the relay and can be viewed in the EnerVista software or the front panel display. Likewise, the transfer date of a settings file saved to a local computer is logged in the EnerVista software.
- Comparing the dates stored in the relay and on the settings file at any time in the future indicates if any changes have been made to the relay configuration since the settings file was saved.

5.2.9.1 SETTINGS FILE TRACEABILITY INFORMATION

The serial number and file transfer date are saved in the settings files when they are sent to a device. The serial number and file transfer date are included in the settings file device definition within the EnerVista UR Setup.

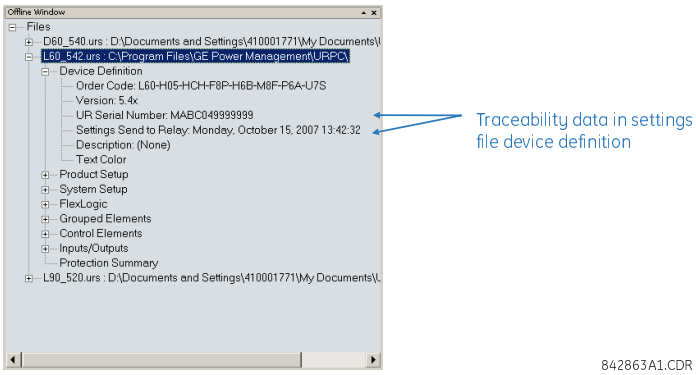

Figure 77: Device definition showing traceability data

This information is also available in printed settings file reports as shown in the example. A report is generated by right-clicking and selecting the **Print Settings** option.

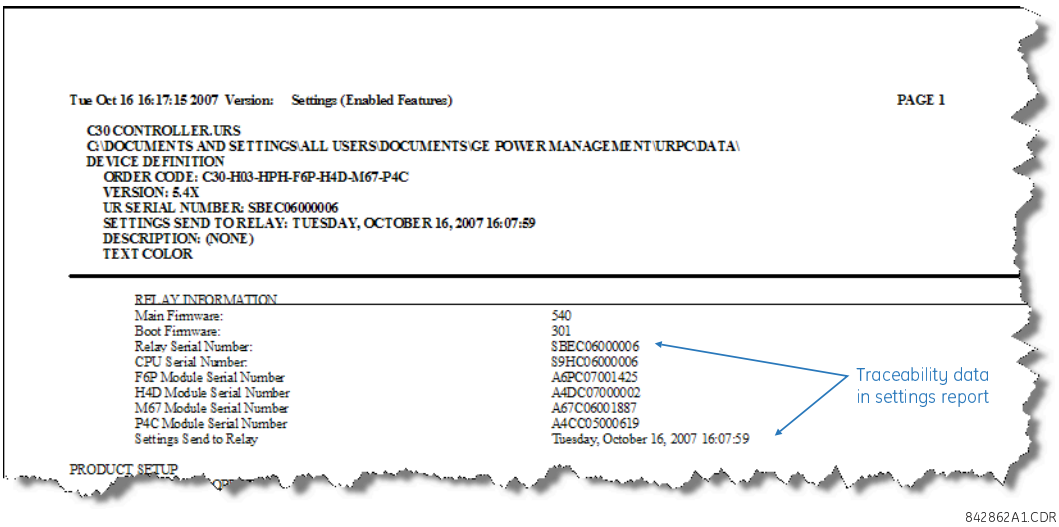

Figure 78: Settings file report showing traceability data

5.2.9.2 ONLINE DEVICE TRACEABILITY INFORMATION

The serial number and file transfer date are available for an online device through the actual values. Select the **Actual Values > Product Info > Model Information** menu item within the EnerVista online window as shown in the example.

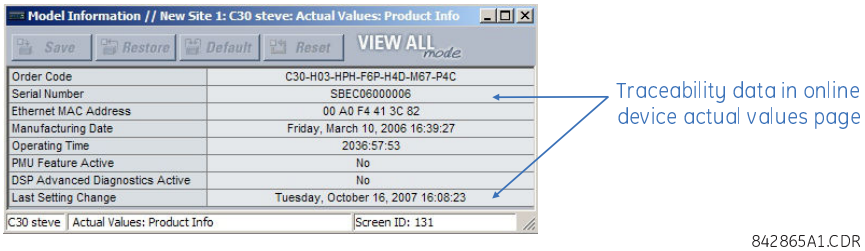

Figure 79: Traceability data in Actual Values window

This information is also available from the front panel display through the following actual values:

ACTUAL VALUES > PRODUCT INFO > MODEL INFORMATION > SERIAL NUMBER

ACTUAL VALUES > PRODUCT INFO > MODEL INFORMATION > LAST SETTING CHANGE

5.2.9.3 ADDITIONAL TRACEABILITY RULES

The following additional rules apply for the traceability feature:

- If the user changes any settings within the settings file in the offline window, then the traceability information is removed from the settings file
- If the user creates a new settings file, then no traceability information is included in the settings file
- If the user converts an existing settings file to another revision, then any existing traceability information is removed from the settings file
- If the user duplicates an existing settings file, then any traceability information is transferred to the duplicate settings file

5.2.10 COMMAND LINE INTERFACE

SetupCLI is a command line interface to communicate with the EnerVista UR Setup software. Commands can be sent from a DOS prompt or a Windows batch file.

The interface is installed with the EnerVista software. Its default location is similar to `C:\Program Files \EnerVista\Tools\SetupCLI`

The EnerVista software needs to be installed on a computer to run the command line interface. The command line interface does not provide a remote connection to a computer running the EnerVista software.

Items to note are as follows:

- It works with EnerVista UR Setup version 6.10 and later
- It is available in English only
- The graphical user interface of the software is not available concurrently with the command line interface
- It does not support concurrent commands
- It has limited functionality with CyberSentry
- It does not interface with UR Engineer
- It does not work when EnerVista UR Setup security is enabled, meaning when login is required

The command syntax is as follows:

- Options enclosed in [ ] are optional
- Values enclosed in < > are replaced with your own values
- <Application> is replaced with the EnerVista software to receive the command. Use "URPC" for EnerVista UR Setup.
- <device> is the UR device name, as displayed in the Device Name field of the Device Setup window and listed in the Online Window. Use quotes with spaces, such as "B30 Belfort".
- "-s" can be used with any command to suppress error messages
- All commands, their return codes, and error description are logged in the file C:\ProgramData\EnerVista\Tools \SetupCLI\SetupCLI.log
- When the Supervisor account is enabled, the LOCK SETTINGS setting must be disabled (default) before the putsettings, inservice, or reboot command can be used. This setting cannot be changed using the command line interface.
- Use quotes ("") to enclose any parameter containing a space
- Commands, options, and parameters are case sensitive
- All commands have a return code of 0-255. 0 indicates success and 1-255 indicate different errors
- If SetupCLI is automated (in a batch file), make sure that only a single batch is running at a time. SetupCLI does not support concurrent operations.

To run the command line interface:

1. In Windows, click the **Start** button, enter `cmd`, and press the **Enter** key. After prompting for permission, the Windows command window opens.
2. Enter `SetupCLI` followed by the action to execute. An example of use is to enter `SetupCLI -h` to display help, specifically the commands and explanations outlined here.

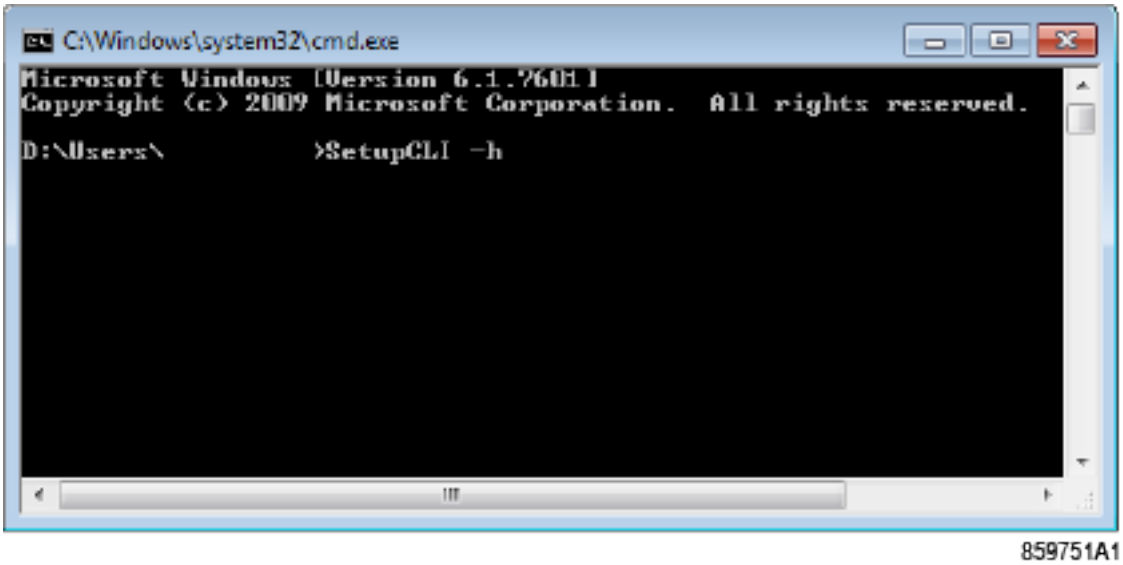

Figure 80: Command line interface run in the command window

`SetupCLI -h`

Display help.

It displays the content outline here.

`SetupCLI <Application> start [-c] [-s]`

Launch application with name <Application>.

To start in client mode, which is the graphical user interface, include option '-c'. Before use, the software must be idle without any windows open. Any activity or open windows can cause unexpected behavior. When in client mode, do not use Launchpad's Site Management feature.

To suppress errors, include option -s.

Example: `SetupCLI URPC start -c`

`SetupCLI <Application> exit [-s]`

Exit application with name <Application>.

Example: `SetupCLI URPC exit`

SetupCLI <Application> login -d <device> [-A <authentication type>] [-a <account>] -w <password> [-s]

Authenticate with device <device> using password <password>.

For non-CyberSentry devices: set <authentication type> to `"traditional"`. Note that <authentication type> defaults to `traditional` if not specified.

Set <account> to `COMMANDS` or `SETTINGS`. If not specified, the SETTINGS account is used.

Example: `SetupCLI URPC login -d "C30 Melbourne" -A traditional -a SETTINGS -w 1password1`

Example of a batch file that checks for an error (this batch file uses standard batch file operations to check the return code (ERRORLEVEL) and jump to an error handler):

```
SetupCLI URPC start
SetupCLI URPC login -d demoDevice -a SETTINGS -w WrongPassword -A traditional
IF NOT ERRORLEVEL 0 GOTO FAILED
SetupCLI URPC putsettings -d demoDevice -f "example file.urs"
SetupCLI URPC inservice -d demoDevice
SetupCLI URPC reboot -d demoDevice
SetupCLI URPC exit
exit

:FAILED
echo Please try again
exit
```

For CyberSentry devices with local authentication: Set <authentication type> to `"local"`. Set <account> to `"Supervisor"`, `"Administrator"`, `"Engineer"`, `"Operator"`, or `"Observer"`.

For CyberSentry devices with RADIUS authentication — Set <authentication type> to `"radius"`. Set <account> to the user's account on the RADIUS server.

SetupCLI <Application> logout -d <device> [-s]

Log out of device <device>.

Example: `SetupCLI URPC logout -d C30`

SetupCLI <Application> getsettings -d <device> -f <File> [-s]

Read settings from device <device> and save them to the .urs file <File>. The <File> must not already exist. The default path to the output file is `C:\Users\Public\Public Documents\GE Power Management\URPC\Data`

Example: `SetupCLI URPC getsettings -d C30 -f "C30 Markham.urs"`

Example of a batch file to retrieve a settings file:

```
SetupCLI URPC start
SetupCLI URPC getsettings -d demoDevice -f C:\example.urs
SetupCLI URPC exit
```

Example of a batch file to retrieve a settings file from a relay that requires RADIUS authentication:

```
SetupCLI URPC start
SetupCLI URPC login -d demoDevice -a %1 -w %2 -A radius
SetupCLI URPC getsettings -d demoDevice -f "example file.urs"
SetupCLI URPC logout -d demoDevice
```

```
SetupCLI URPC exit
```

Although a user name and password could have been entered in this batch file, it would have created a security risk. Batch files allow you to pass in runtime parameters and refer to them in your script as %1, %2, and so on. For example, if this file is called example.bat, one calls it as follows: "example.bat MyUserName MyPassword"

SetupCLI <Application> putsettings -d <device> -f <File> [-s]

Write the settings file <File> to the device <device>.

For CyberSentry devices, putsettings is only supported for users with the "Administrator" role.

Example: `SetupCLI URPC putsettings -d C30 -f "C30 Markham.urs"`

SetupCLI <Application> compare -f <File1> -r <File2> -o <OutputFile> [-s]

Compare settings files <File1> and <File2>, and save output to <OutputFile>.

Example: `SetupCLI URPC compare -f may.urs -r september.urs -o compared.txt`

Batch file example that retrieves a settings file, compares it with an existing settings file, and opens the resulting comparison file:

```
SetupCLI URPC start
SetupCLI URPC getsettings -d demoDevice -f devicefile.urs
SetupCLI URPC compare -f existingfile.urs -r devicefile.urs -o output.txt
```

The output is similar to the following:

```
Comparing settings file aaa.urs : C:\Users\Public\Public Documents\GE Power
Management\URPC\Data\ with bbb.urs : C:\Users\Public\Public Documents\GE Power
Management\URPC\Data\

#     Setting Name                      (Group,Module,Item)         Value
1     Default Message Timeout           (1,1,1)                     = 299 s
2     Default Message Timeout           (1,1,1)                     = 300 s
3     Flash Message Time                (1,1,1)                     = 0.9 s
4     Flash Message Time                (1,1,1)                     = 1.0 s
```

SetupCLI <Application> inservice -d <device> [-n] [-s]

Put the device in service. Include option -n to take the device out of service.

Example: `SetupCLI URPC inservice -d C30`

SetupCLI <Application> reboot -d <device> [-s]

Reboot the relay <device>. This is necessary after changing IEC 61850 settings and aggregator source settings.

Example: `SetupCLI URPC reboot -d "C30_Instanbul"`

SetupCLI <Application> adddevice -I <IP Address> -S <Slave Address> -P <Modbus Port>

Connect to a device using its IP address, slave address, and Modbus port. Show the device in the EnerVista interface under the **SetupCLI** Site as `DEV@SETUP_CLI`.

EnerVista UR Setup 7.30 or higher supports this command.

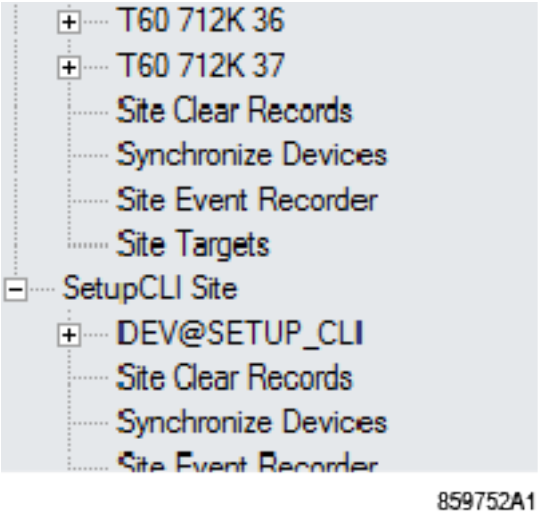

Figure 81: Device added using IP address

The device is named as `DEV@SETUP_CLI`, which is used as the device name required by the <device> parameter of other **SetupCLI** commands.

The device name `DEV@SETUP_CLI` is always assigned to the device that is connected most recently by performing **'adddevice'** command. It means that the Application only keeps up to one device named as `DEV@SETUP_CLI`, the 'adddevice' command disconnects/deletes the device `DEV@SETUP _CLI` that was connected previously by performing **'adddevice'** command.

The device name `DEV@SETUP_CLI` is never used to configure/connect to a device through the graphical user interface.

Example of a batch file using a device IP address to retrieve its settings file:

```
SetupCLI URPC start
SetupCLI URPC adddevice -I 192.168.140.113 -S 113 -P 502
SetupCLI URPC getsettings -d DEV@SETUP_CLI -f C:\example.urs
SetupCLI URPC exit
```

After connecting the device using IP address, the device name `DEV@SETUP_CLI` is used to identify this device in **'getsettings'** command.

Example of a batch file using a device IP address to retrieve a settings file when RADIUS authentication is required:

```
SetupCLI URPC start
SetupCLI URPC adddevice -I 192.168.140.113 -S 113 -P 502
SetupCLI URPC login -d DEV@SETUP_CLI -a %1 -w %2 -A radius
SetupCLI URPC getsettings -d DEV@SETUP_CLI -f "example file.urs"
SetupCLI URPC logout -d DEV@SETUP_CLI
```

```
SetupCLI URPC exit
```

`DEV@SETUP_CLI` has to be used as the device name in the commands followed by the **'adddevice'** command.

5.3 FRONT PANEL

The basic front panel consists of LED panels, an RS232 port, keypad, LCD display, control pushbuttons, and optional user-programmable pushbuttons. The front panel is hinged to allow easy access to removable modules inside the chassis. There is also a removable dust cover that is to be removed when accessing the keypad. The basic front panel is available in either horizontal or vertical format*. The following figures shows the two types of basic front panel.

> *Note:*
> **Vertical format not available for B90 or N60*

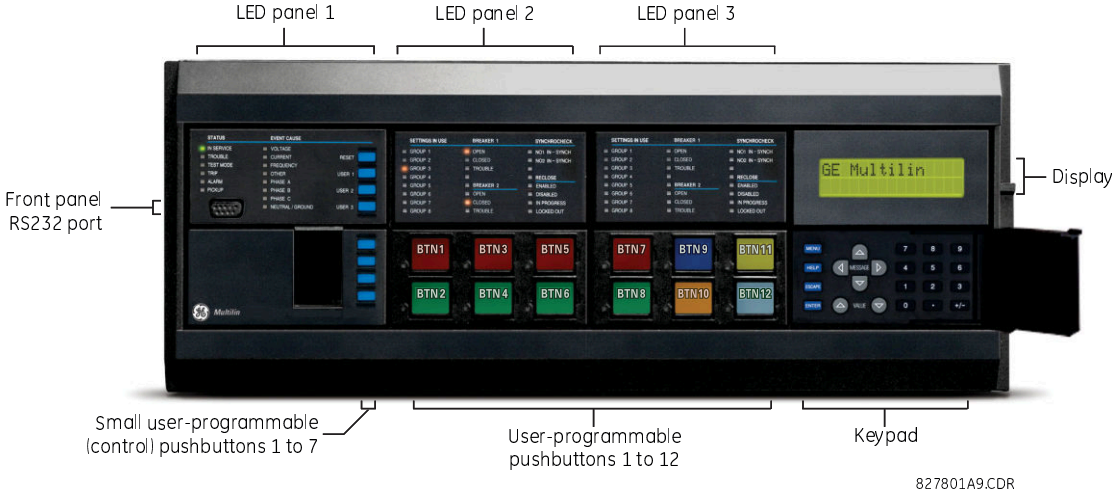

Figure 82: Basic horizontal front panel

5.3.1 BASIC FRONT PANEL

The basic front panel consists of LED panels, an RS232 port, keypad, LCD display, control pushbuttons, and optional user-programmable pushbuttons. The front panel is hinged to allow easy access to removable modules inside the chassis. There is also a removable dust cover that is to be removed when accessing the keypad. The basic front panel is available in the horizontal format only. The following figures shows the two types of basic front panel.

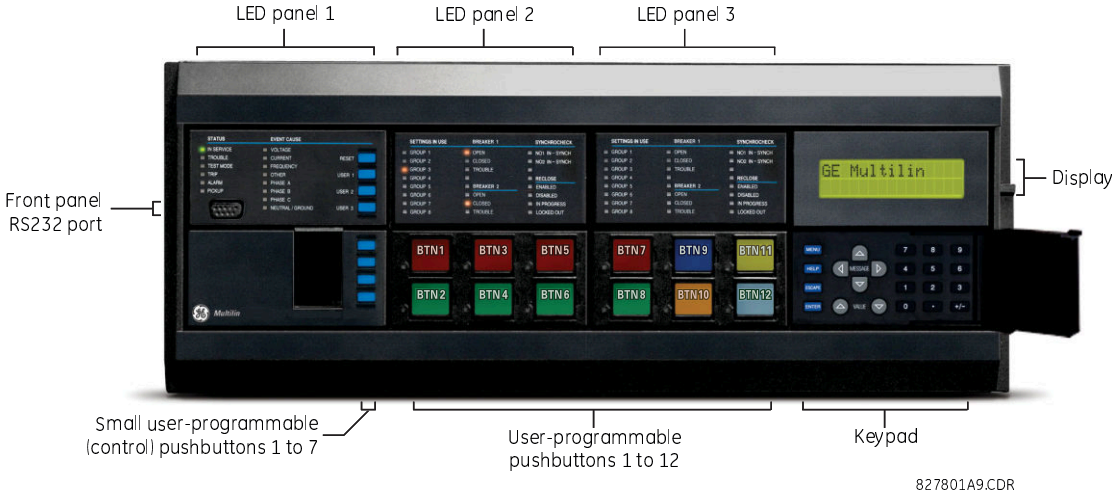

Figure 83: Basic horizontal front panel

5.3.1.1 FRONT PANEL DISPLAY

Messages display on a back-lit liquid crystal display (LCD) to make them visible under poor lighting conditions. When the keypad and display are not actively being used, the display defaults to user-defined messages. Any high-priority event driven message overrides the default messages.

Up to 20 characters can be used to configure some setting names in the software, while up to 12 characters display on the front panel. A tilde (~) symbol is used for the twelfth character on the front panel when a name extends beyond the 12 character limit. An example is shown for a Virtual Input.

Figure 84: Tilde symbols displays with names 12 or more characters long

The front panel can be viewed and used in the EnerVista software, for example to view an error message displayed on the front panel or the LEDs. To view the front panel in EnerVista software, click **Actual Values > Front Panel**, then any option.

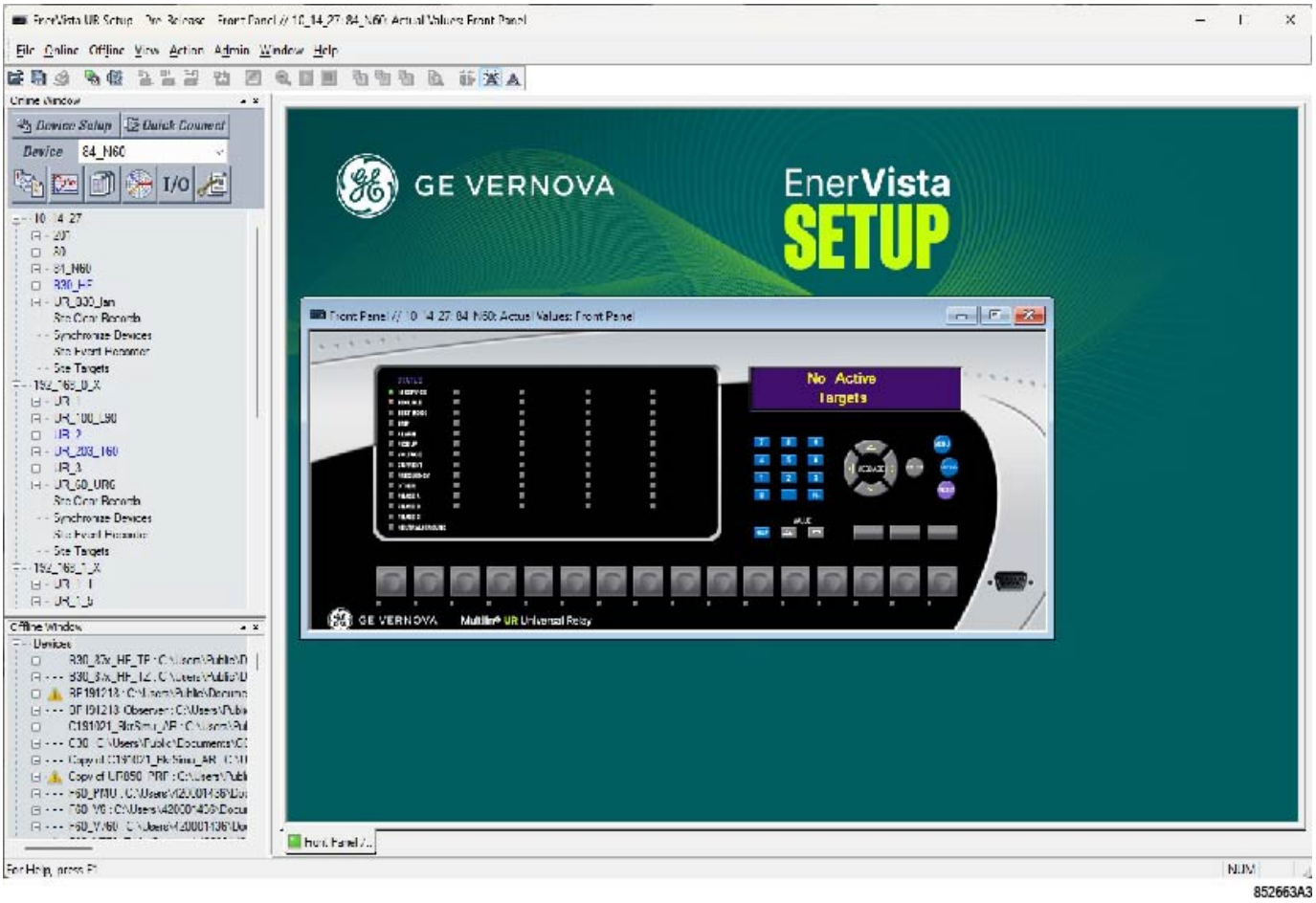

Figure 85: Front panel use in the software (B30 shown)

5.3.1.2 NAVIGATION KEYS

Display messages are organized into pages under the following headings: actual values, settings, commands, and targets.

The **MENU** key navigates through these pages. Each heading page is divided further into further submenus.

The **MESSAGE** keys navigate through the sub-menus. The **VALUE** keys increment or decrement numerical setting values when in programming mode. These keys also scroll through alphanumeric values in the text edit mode. Alternatively, values can be entered with the numeric keypad.

The decimal key initiates and advances to the next character in text edit mode or enters a decimal point.

The **HELP** key can be pressed at any time for context-sensitive help messages.

The **ENTER** key stores setting values.

When entering an IP address on the front panel, key in the first sequence of the number, then press the • key for the decimal place. For example, for 127.0.0.1, press 127, then •, then 0, then •, then 0, then •, then 1. To save the address, press the **ENTER** key.

When entering or changing an order code with two lines, press the down arrow to access the second line. On a basic front panel, do this under *ACTUAL VALUES* > *PRODUCT INFO* > *MODEL INFORMATION*.

The figure shows the sequence to use to enter a setting. Subsequent sections provide more detail.

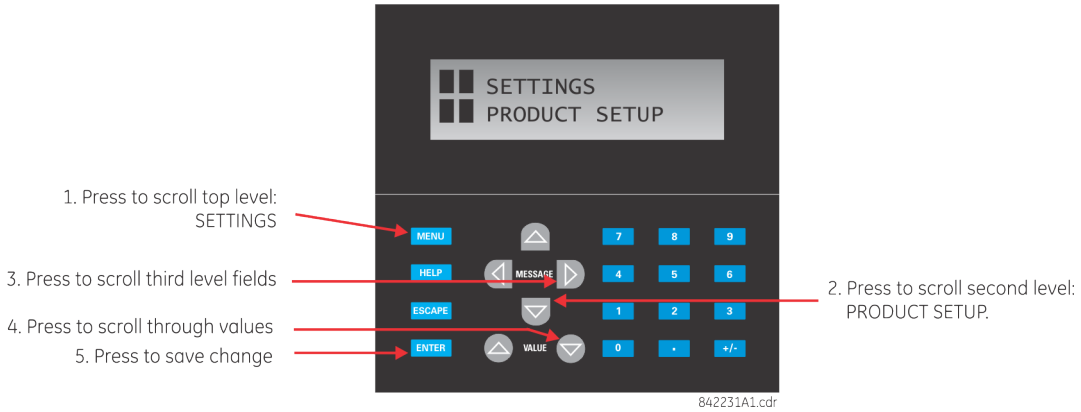

Figure 86: Front panel keypad use (basic front panel shown)

5.3.1.3 LED INDICATORS

The basic front panel consists of three panels with LED indicators, keys, and a communications port. The **RESET** key is used to reset any latched LED indicator or target message, once the condition has been cleared (these latched conditions can also be reset via the *SETTINGS* > *INPUT/OUTPUTS* > *RESETTING* menu). The RS232 port is for connection to a computer.

The USER keys are used by the breaker control feature.

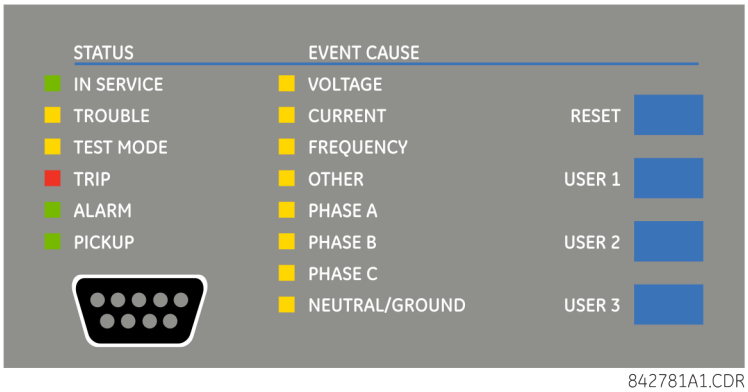

Figure 87: LED panel 1

Status indicators

- IN SERVICE — Indicates that control power is applied, all monitored inputs/outputs and internal systems are fine, and the relay is in (online) Programmed mode (under **Settings > Product Setup > Installation**)
- TROUBLE — Indicates that the relay has detected an internal problem. Check the self-test messages outlined at the end of the Commands and Targets chapter, and view the event records under Actual Values > Records. For a beta / pre-release, this LED is always on.
- TEST MODE — Indicates that the relay is in test mode. For information, see the Testing section in the Settings chapter.
- TRIP — Indicates that the selected FlexLogic operand serving as a trip switch has operated. This indicator always latches; initiate the reset command to reset the latch.
- ALARM — Indicates that the selected FlexLogic operand serving as an alarm switch has operated. This indicator never latches.
- PICKUP — Indicates that an element is picked up. This indicator never latches.

Event-cause indicators

Event-cause LEDs are turned on or off by protection elements that have their respective target setting selected as either “Enabled” or “Latched.” If a protection element target setting is “Enabled,” then the corresponding event cause LEDs remain on as long as the operand associated with the element remains asserted. If a protection element target setting is “Latched,” then the corresponding event cause LEDs turn on when the operate operand associated with the element is asserted and remains on until the RESET button on the front panel is pressed after the operand is reset.

All elements that are able to discriminate faulted phases can independently turn off or on the phase A, B, or C LEDs. This includes phase instantaneous overcurrent, phase undervoltage, and so on. This means that the phase A, B, and C operate operands for individual protection elements are ORed to turn on or off the phase A, B, or C LEDs.

- VOLTAGE — Indicates voltage was involved
- CURRENT — Indicates current was involved
- FREQUENCY — Indicates frequency was involved
- OTHER — Indicates a composite function that is not solely current, voltage, or frequency based (distance or power for example) or a control function (digital element or trip bus for example)
- PHASE A — Indicates phase A was involved
- PHASE B — Indicates phase B was involved
- PHASE C — Indicates phase C was involved
- NEUTRAL/GROUND — Indicates that neutral or ground was involved

User-programmable indicators

The second and third panels provide 48 amber LED indicators whose operation is controlled by the user. Custom labeling can be done.

User customization of LED operation is of maximum benefit in installations where languages other than English are used to communicate with operators. See the User-programmable LEDs section in chapter 5 for the settings used to program the operation of the LEDs on these panels.

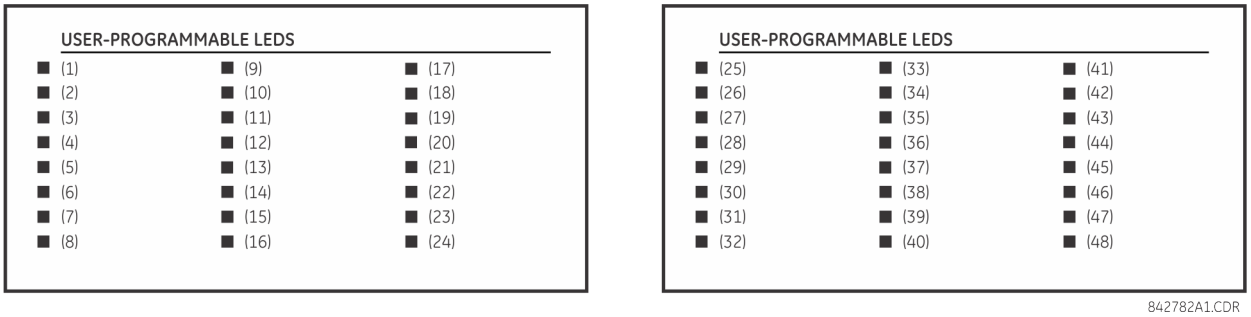

Figure 88: LED panels 2 and 3 (index template)

Default labels for LED panel 2

The default labels are intended to represent the following:

- GROUP 1...6 — The illuminated GROUP is the active settings group
- BREAKER 1(2) OPEN — The breaker is open
- BREAKER 1(2) CLOSED — The breaker is closed
- BREAKER 1(2) TROUBLE — A problem related to the breaker has been detected
- SYNCHROCHECK NO1(10) IN-SYNCH — Voltages have satisfied the synchrocheck element
- RECLOSE ENABLED — The recloser is operational
- RECLOSE DISABLED — The recloser is not operational
- RECLOSE IN PROGRESS — A reclose operation is in progress
- RECLOSE LOCKED OUT — The recloser is not operational and requires a reset

Note:
Firmware revisions 2.9x and earlier support eight user setting groups; revisions 3.0x and higher support six setting groups. For convenience of users using earlier firmware revisions, the relay panel shows eight setting groups. Even though the LEDs have default labels, they are fully user-programmable.

The relay is shipped with the default label for the LED panel 2. The LEDs, however, are not pre-programmed. To match the pre-printed label, the LED settings must be entered as shown in the 'User-programmable LEDs section'. The LEDs are fully user-programmable. The default labels can be replaced by user-printed labels for both panels as explained in the next section.

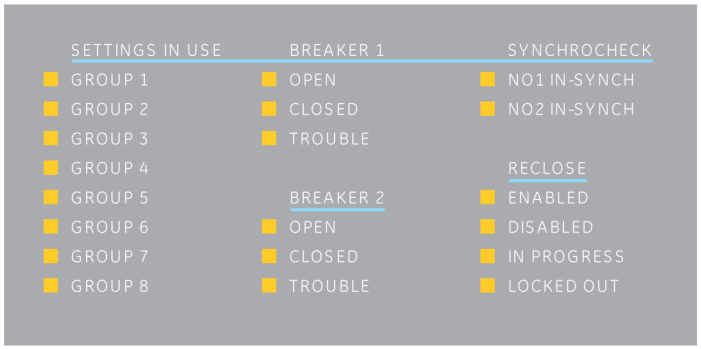

842784A1.CDR

Figure 89: LED panel 2 (default labels)

5.3.1.4 LABELING

After programming LEDs and pushbuttons under **Settings > Product Setup > User-Programmable Leds** and **User-Programmable Pushbuttons**, labels can be created for the front panel.

To create LED and pushbutton labels for a basic front panel:

1. In the EnerVista software, if the relay is not already listed in the Offline Window area, add it by right-clicking it and selecting the **Add Device to Offline Window** option.
2. Click the **File > Front Panel Report** menu item and select the device.
3. In the Front Panel Report window, double-click an LED or pushbutton slot and type a label. If you need to see the existing front panel remotely, access **Actual Values > Front Panel** for the online device.

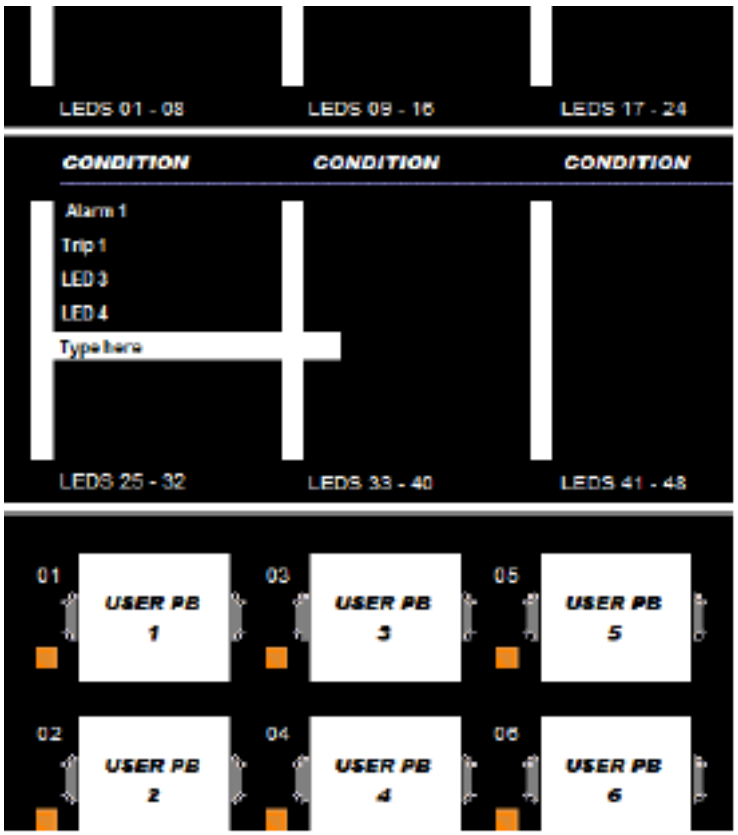

852715A1

Figure 90: Basic front panel label designer (LEDs shown)

4. Optionally save the changes by clicking the Save icon on the toolbar.

5. Click the Print icon on the toolbar. Consider printing to PDF format and adjusting the zoom for appropriate label size, then print on a physical printer.
6. Cut labels as a block or individually, for example with scissors or an Exacto knife.
7. If there is a plastic cover over the front panel, remove it by gently pushing in on the right side and lifting off the cover.
8. Remove the plastic cover over the LEDs or pushbutton(s) using a screw driver.
9. Insert the labels.
10. Re-attach the plastic covers.

5.3.1.5 MENU NAVIGATION

Press the MENU key to display selections or home page. Each press of the key advances through the following main headings:

- Actual Values
- Settings
- Commands
- Targets
- Factory Service
- User displays (when enabled)

The setting and actual value pages are arranged hierarchically. Header display pages are indicated by two black squares, (■■) while sub-header pages are indicated by a single black square (■). The header display pages represent the highest level of the hierarchy and the sub-header display pages fall below this level. Use the down, right, left, and up arrows to navigate the menu. The MESSAGE up and down arrow keys move within a group of headers, sub-headers, setting values, or actual values. Continually pressing the MESSAGE right arrow from a header display displays specific information for the category. Conversely, continually pressing the MESSAGE left arrow from a setting value or actual value display returns to the header display.

Default values are indicated in this instruction manual in mixed case. In the example shown here, the default access level is restricted.

Highest level **Lowest level (setting value)**

```
■ ■ SETTINGS          ⇔  ■ SECURITY          ⇔  ■ ACCESS LEVEL
■ ■ PRODUCT SETUP        ■                       ■Restricted
        ⇕
■ ■ SETTINGS
■ ■ SYSTEM SETUP
```

Example

```
■ ■ ACTUAL VALUES
■ ■ STATUS
        ⇩
■ ■ SETTINGS
■ ■ PRODUCT SETUP
        ⇩
■ SECURITY
■
        ⇩
```

Press the MENU key until the Actual Values header page appears. This page contains system and relay status information.

Press the MENU key until the Settings header page appears. This category contains settings to configure the relay.

Press the MESSAGE right arrow once to display the first sub-header (Security).

ACCESS LEVEL: RESTRICTED	Press the MESSAGE right arrow once to display the first setting for Security.
⇩	
■ SECURITY ■	Press the MESSAGE left arrow to return to the Security heading.
⇩	
■ DISPLAY ■ PROPERTIES	Press the MESSAGE down arrow to display the second setting sub-header associated with the Product Setup header.
⇩	
LANGUAGE: English	Press the MESSAGE right arrow once to display the first setting for Display Properties.
⇩	
■ ■ SETTINGS ■ ■ SYSTEM SETUP	Press the MESSAGE left arrow to return to the Display Properties page, then again to return to the Product Setup Page. Press the MESSAGE down arrow to move to the next Settings page. This page contains settings for System Setup.

5.3.1.6 CHANGE SETTINGS

Numerical data

Each numerical setting has its own minimum, maximum, and increment value associated with it. These parameters define what values are acceptable for a setting.

FLASH MESSAGE **TIME: 10.0 s**	For example, select the SETTINGS > PRODUCT SETUP > DISPLAY PROPERTIES > FLASH MESSAGE TIME setting.
⇩	
MINIMUM: 0.5 **MAXIMUM: 10.0**	Press the HELP key to view the minimum and maximum values. Press the key again to view the next context sensitive help message.

Two methods of editing and storing a numerical setting value are available.

- **0 to 9 and decimal point** — The relay numeric keypad works the same as a calculator. A number is entered one digit at a time. The leftmost digit is entered first and the rightmost digit is entered last. Pressing the MESSAGE left arrow or pressing the ESCAPE key, returns the original value to the display.
- **VALUE keys** — The VALUE up arrow increments the displayed value by the step value, up to the maximum value allowed. While at the maximum value, pressing the VALUE up arrow again allows the setting selection to continue upward from the minimum value. The VALUE down arrow decrements the displayed value by the step value, down to the minimum value. While at the minimum value, pressing the VALUE down arrow again allows the setting selection to continue downward from the maximum value.

FLASH MESSAGE **TIME: 2.5 s**	As an example, set the flash message time setting to 2.5 seconds. Press the appropriate numeric keys in the sequence “2 . 5". The display message changes as the digits are being entered.
⇩	

NEW SETTING HAS BEEN STORED	Until ENTER is pressed, editing changes are not registered by the relay. Press ENTER to store the new value in memory. This flash message momentarily appears as confirmation of the storing process.

Note:
Numerical values that contain decimal places are rounded-off if more decimal place digits are entered than specified by the step value

Enumeration data

Enumeration settings have data values that are part of a set, whose members are explicitly defined by a name. A set has two or more members.

ACCESS LEVEL: Restricted	For example, the selections available for ACCESS LEVEL are "Restricted," "Command," "Setting," and "Factory Service."

Enumeration type values are changed using the VALUE keys. The VALUE up arrow displays the next selection while the VALUE down arrow displays the previous selection.

ACCESS LEVEL: Setting	If the ACCESS LEVEL needs to be "Setting," press the VALUE keys until the proper selection displays. Press HELP at any time for the context sensitive help messages.

⇩

NEW SETTING HAS BEEN STORED	Changes are not registered by the relay until the ENTER key is pressed. Pressing ENTER stores the new value in memory. This flash message momentarily appears as confirmation

Alphanumeric text

Text settings have data values that are fixed in length, but user-defined in characters. They can be upper-case letters, lower-case letters, numerals, and a selection of special characters.

There are several places where text messages can be programmed to allow the relay to be customized for specific applications. One example is the Message Scratchpad. Use the following procedure to enter alphanumeric text messages.

For example, enter the text “Breaker #1”.

1. Press the decimal point to enter text edit mode.
2. Press the VALUE keys until the character 'B' appears; press the decimal key to advance the cursor to the next position.
3. Repeat step 2 for the remaining characters: r,e,a,k,e,r, ,#,1.
4. Press ENTER to store the text.
5. If you have any problem, press HELP to view context sensitive help. Flash messages appear sequentially for several seconds each. For the case of a text setting message, pressing HELP displays how to edit and store new values.

5.3.2 ENHANCED FRONT PANEL

The enhanced front panel consists of LED panels, an RS232 port, keypad, LCD display, control pushbuttons, and optional user-programmable pushbuttons. The front panel is hinged to allow access to removable modules inside the chassis. The enhanced front panel is available in either horizontal or vertical format*. The following figure shows the horizontal front panel. The following figures shows the two types of enhanced front panel.

Note:
**Vertical format not available for B90 or N60*

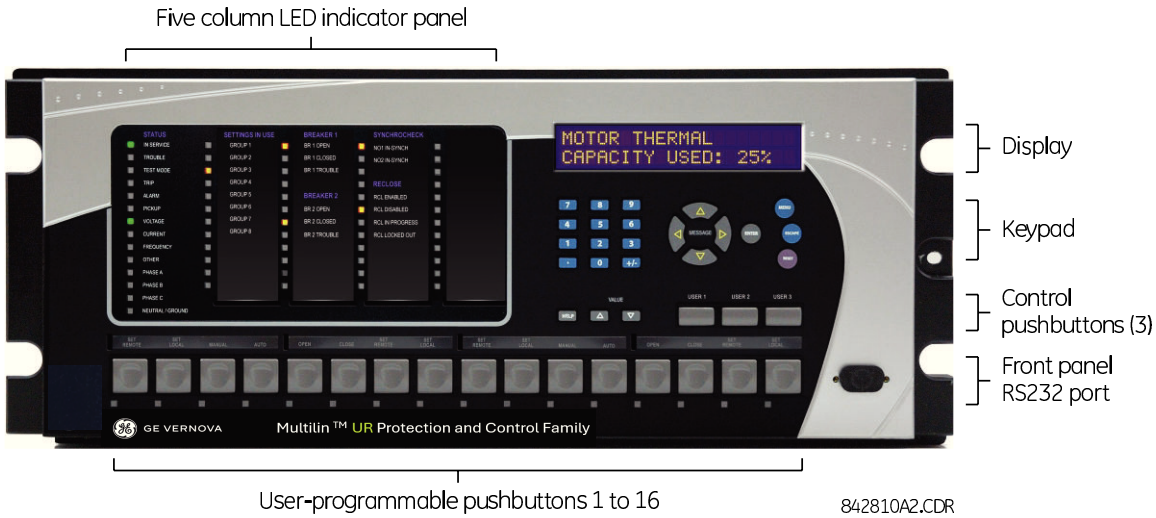

Figure 91: Enhanced horizontal front panel

Figure 92: Enhanced vertical front panel

5.3.2.1 ENHANCED FRONT PANEL DISPLAY

Messages display on a back-lit liquid crystal display (LCD) to make them visible under poor lighting conditions. When the keypad and display are not actively being used, the display defaults to user-defined messages. Any high-priority event driven message overrides the default messages.

Up to 20 characters can be used to configure some setting names in the software, while up to 12 characters display on the front panel. A tilde (~) symbol is used for the twelfth character on the front panel when a name extends beyond the 12 character limit. An example is shown for a Virtual Input.

Figure 93: Tilde symbols displays with names 12 or more characters long

The front panel can be viewed and used in the EnerVista software, for example to view an error message displayed on the front panel or the LEDs. To view the front panel in EnerVista software, click **Actual Values > Front Panel**, then any option.

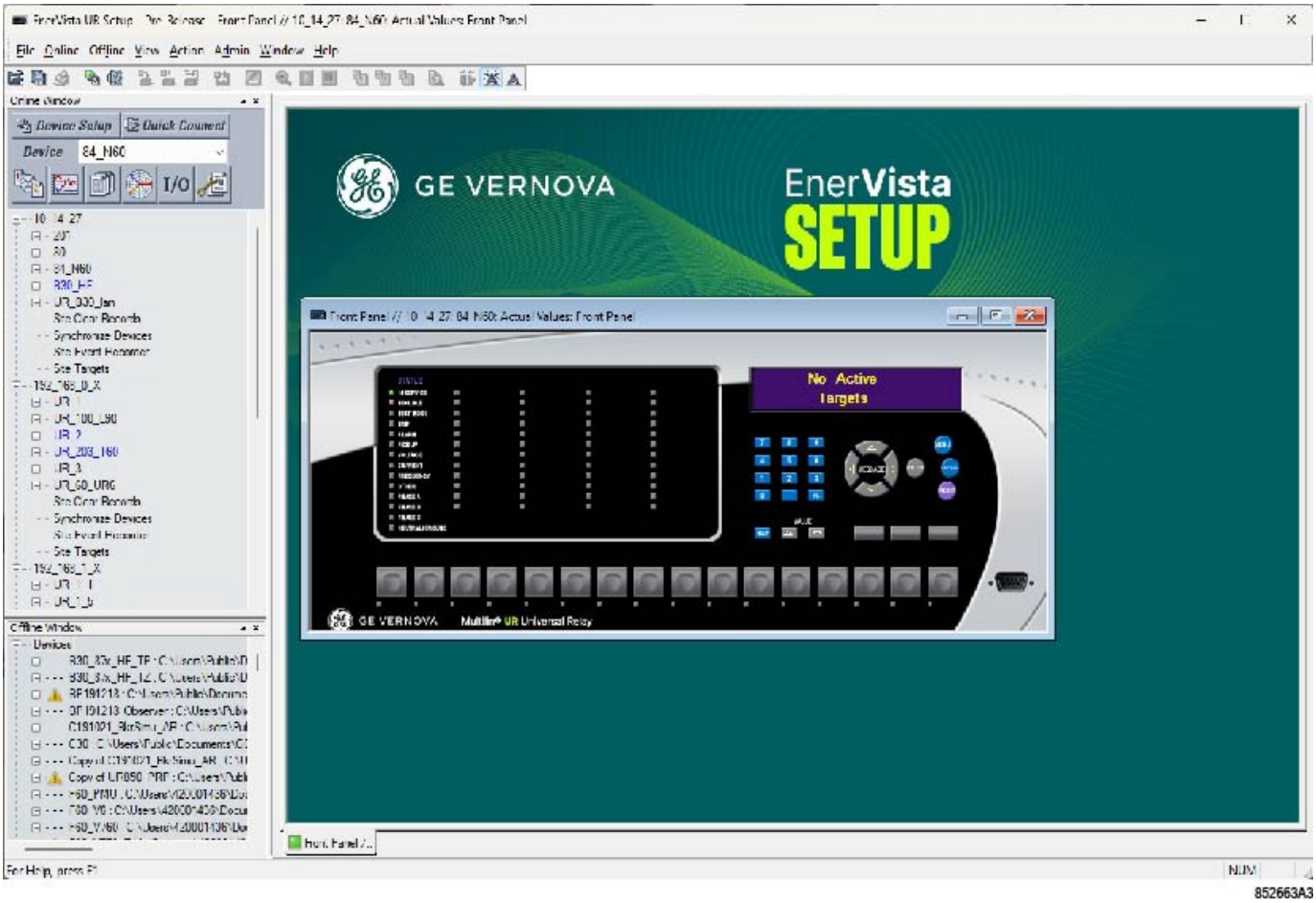

Figure 94: Front panel use in the software (B30 shown)

5.3.2.2 NAVIGATION KEYS

Display messages are organized into pages under the following headings: actual values, settings, commands, and targets.

The **MENU** key navigates through these pages. Each heading page is divided further into further submenus.

The **MESSAGE** keys navigate through the sub-menus. The **VALUE** keys increment or decrement numerical setting values when in programming mode. These keys also scroll through alphanumeric values in the text edit mode. Alternatively, values can be entered with the numeric keypad.

The decimal key initiates and advances to the next character in text edit mode or enters a decimal point.

The **HELP** key can be pressed at any time for context-sensitive help messages.

The **ENTER** key stores setting values.

When entering an IP address on the front panel, key in the first sequence of the number, then press the • key for the decimal place. For example, for 127.0.0.1, press 127, then •, then 0, then •, then 0, then •, then 1. To save the address, press the **ENTER** key.

When entering or changing an order code with two lines, press the down arrow to access the second line. On a basic front panel, do this under *ACTUAL VALUES* > *PRODUCT INFO* > *MODEL INFORMATION*.

The figure shows the sequence to use to enter a setting. Subsequent sections provide more detail.

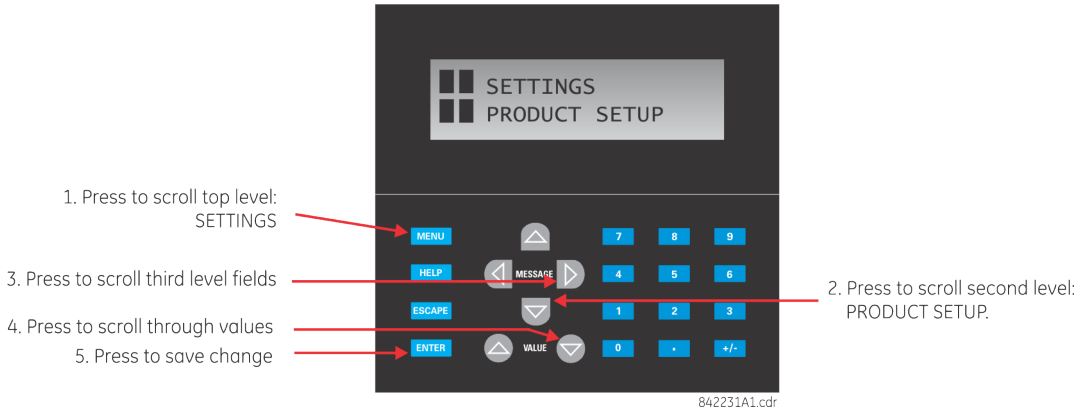

Figure 95: Front panel keypad use (basic front panel shown)

5.3.2.3 LED INDICATORS

The enhanced front panel display provides five columns of LED indicators. The first column contains 14 status and event-cause LEDs. The next four columns contain the 48 user-programmable LEDs.

The **RESET** key is used to reset any latched LED indicator or target message, once the condition has been cleared (these latched conditions can also be reset via the *SETTINGS* > *INPUT/OUTPUTS* > *RESETTING* menu).

The **USER** keys are used by the breaker control feature.

842811A1.CDR

Figure 96: Typical LED panel for enhanced front panel

The status indicators in the first column are as follows:

- **IN SERVICE** — Indicates that control power is applied, all monitored inputs/outputs and internal systems are fine, and the relay is in (online) Programmed mode (under **Settings > Product Setup > Installation**)
- **TROUBLE** — Indicates that the relay has detected an internal problem. Check the self-test messages outlined at the end of the Commands and Targets chapter, and view the event records under **Actual Values > Records**. For a beta / pre-release, this LED is always on.
- **TEST MODE** — Indicates that the relay is in test mode. For information, see the Testing section in the Settings chapter.
- **TRIP** — Indicates that the selected FlexLogic operand serving as a trip input has operated. Set the operand under **Settings > Product Setup > User-Programmable LEDs > Trip & Alarm LEDs**. This indicator latches; initiate the reset command to reset the latch.
- **ALARM** — Indicates that the FlexLogic operand serving as an alarm switch has operated. Set the operand under **Settings > Product Setup > User-Programmable LEDs > Trip & Alarm LEDs**. This indicator never latches.
- **PICKUP** — Indicates that an element is picked up. This indicator never latches.
- The event-cause indicators in the first column are as follows.

Event-cause LEDs are below the status LEDs. They are turned on or off by protection elements that have their respective target setting selected as either “Enabled” or “Latched.” If a protection element target setting is “Enabled,” then the corresponding event-cause LEDs remain on as long as the operand associated with the element remains asserted. If a protection element target setting is “Latched,” then the corresponding event-cause LEDs turn on when the operate operand associated with the element is asserted and remains on until the RESET button on the front panel is pressed after the operand is reset.

All elements that are able to discriminate faulted phases can independently turn off or on the phase A, B, or C LEDs. This includes phase instantaneous overcurrent, phase undervoltage, and so on. This means that the phase A, B, and C operate operands for individual protection elements are ORed to turn on or off the phase A, B, or C LEDs.

- VOLTAGE — This LED indicates voltage was involved
- CURRENT — This LED indicates current was involved
- FREQUENCY — This LED indicates frequency was involved
- OTHER — This LED indicates a composite function that is not solely current, voltage, or frequency based (distance or power for example) or a control function (digital element or trip bus for example)
- PHASE A — This LED indicates phase A was involved
- PHASE B — This LED indicates phase B was involved
- PHASE C — This LED indicates phase C was involved
- NEUTRAL/GROUND — This LED indicates that neutral or ground was involved

The user-programmable LEDs consist of 48 amber LED indicators in four columns. The operation of these LEDs is user-defined. Support for applying a customized label beside every LED is provided. Default labels are shipped in the label package of every relay, together with custom templates. The default labels can be replaced by user-printed labels. User customization of LED operation is of maximum benefit in installations where languages other than English are used to communicate with operators. See the User-Programmable LEDs section in chapter 5 for the settings used to program the operation of the LEDs on these panels.

5.3.2.4 LABELING

The following procedure requires these pre-requisites:

- The UR front panel label cutout sheet (Part number 1006-0047) has been downloaded from http://www.gevernova.com/grid-solutions/products/support/ur/URLEDenhanced.doc and printed
- Small-bladed knife

To create custom LED and pushbuttons labels for the enhanced front panel:

1. Start the EnerVista UR Setup software.
2. If not already copied to the Offline Window area, right-click the online device and select the Add Device to Offline Window option. Click the Receive button in the window that opens to save the settings file to the Offline Window area.
3. Type labels as follows. Select the File > Front Panel Report. The window opens.

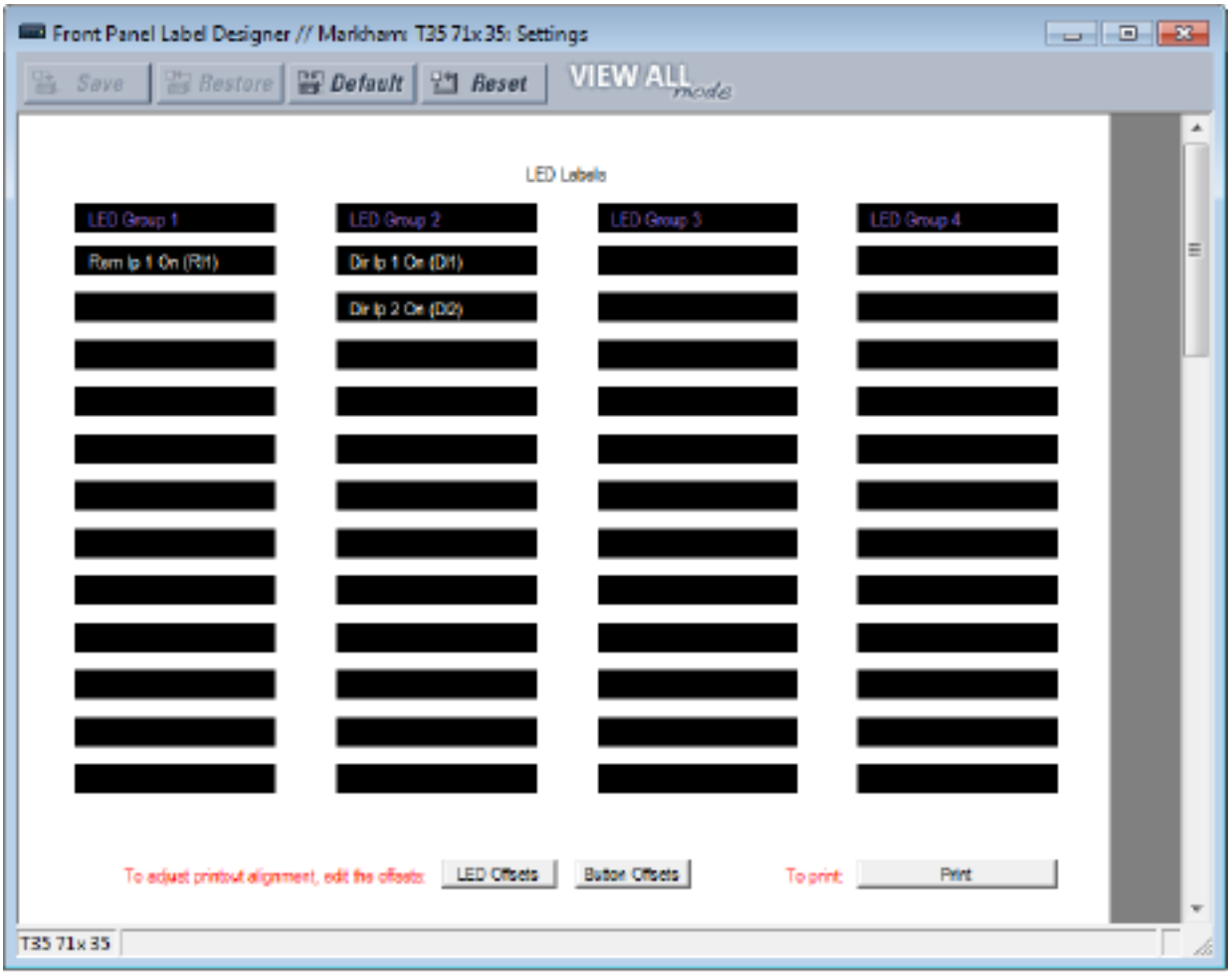

852336A2

Figure 97: Enhanced front panel label designer

4. Enter the text to appear next to each LED and above each user-programmable pushbutton in the fields provided. The LED Offsets and Button Offsets buttons move all labels left/right and up/down on the page (they both do the same action, so use either button). The Button Offsets button does not display when there are no pushbuttons to customize.
5. Feed the UR front panel label cutout sheet into a printer and press the Print button in the front panel report window.
6. When printing is complete, fold the sheet along the perforated lines and punch out the labels.
7. Remove the UR label insert tool from the package and bend the tabs as described in the following procedures. These tabs are used for removal of the default and custom LED labels.

> *Note:*
> *Use the tool with the printed side containing the GE Vernova part number facing the user*

The label package shipped with every relay contains the three default labels, the custom label template sheet, and the label removal tool.

If the default labels are suitable for your application, insert them in the appropriate slots and program the LEDs to match them. If you require custom labels, use the following procedures to remove the original labels and insert the new ones.

To set up and use the label removal tool:

1. Bend the tabs at the left end of the tool upwards as shown

2. Bend the tab at the center of the tool tail

To remove the LED labels from the relay front panel and insert the custom labels as shown:

1. Use the knife to lift the LED label and slide the label tool underneath. Ensure that the bent tabs are pointing away from the relay.

2. Slide the label tool under the LED label until the tabs snap out as shown. This attaches the label tool to the LED label.

3. Remove the tool and attached LED label as shown.

4. Slide the new LED label inside the pocket until the text is properly aligned with the LEDs, as shown.

To remove the user-programmable pushbutton labels from the front panel and insert the custom labels:

1. Use the knife to lift the pushbutton label and slide the tail of the label tool underneath, as shown. Ensure that the bent tab points away from the relay.

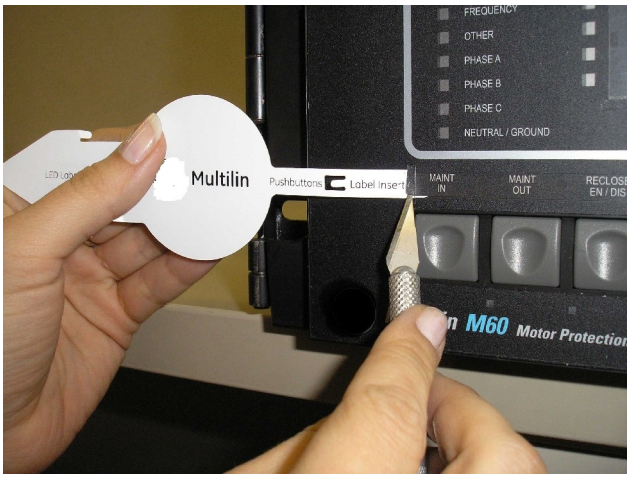

2. Slide the label tool under the user-programmable pushbutton label until the tabs snap out as shown. This attaches the label tool to the user-programmable pushbutton label.

3. Remove the tool and attached user-programmable pushbutton label.

4. Slide the new user-programmable pushbutton label inside the pocket until the text is properly aligned with the buttons.

5.3.2.5 MENU NAVIGATION

Press the MENU key to display selections or home page. Each press of the key advances through the following main headings:

- Actual Values
- Settings
- Commands

- Targets
- Factory Service
- User displays (when enabled)

The setting and actual value pages are arranged hierarchically. Header display pages are indicated by two black squares, (■■) while sub-header pages are indicated by a single black square (■). The header display pages represent the highest level of the hierarchy and the sub-header display pages fall below this level. Use the down, right, left, and up arrows to navigate the menu. The MESSAGE up and down arrow keys move within a group of headers, sub-headers, setting values, or actual values. Continually pressing the MESSAGE right arrow from a header display displays specific information for the category. Conversely, continually pressing the MESSAGE left arrow from a setting value or actual value display returns to the header display.

Default values are indicated in this instruction manual in mixed case. In the example shown here, the default access level is restricted.

Highest level **Lowest level (setting value)**

```
■ ■ SETTINGS
■ ■ PRODUCT SETUP
```

⇔

```
■ SECURITY
■
```

⇔

```
■ ACCESS LEVEL
■Restricted
```

⇕

```
■ ■ SETTINGS
■ ■ SYSTEM SETUP
```

Example

```
■ ■ ACTUAL VALUES
■ ■ STATUS
```

Press the MENU key until the Actual Values header page appears. This page contains system and relay status information.

⇩

```
■ ■ SETTINGS
■ ■ PRODUCT SETUP
```

Press the MENU key until the Settings header page appears. This category contains settings to configure the relay.

⇩

```
■ SECURITY
■
```

Press the MESSAGE right arrow once to display the first sub-header (Security).

⇩

```
ACCESS LEVEL:
RESTRICTED
```

Press the MESSAGE right arrow once to display the first setting for Security.

⇩

```
■ SECURITY
■
```

Press the MESSAGE left arrow to return to the Security heading.

⇩

```
■ DISPLAY
■ PROPERTIES
```

Press the MESSAGE down arrow to display the second setting sub-header associated with the Product Setup header.

⇩

```
LANGUAGE:
English
```

Press the MESSAGE right arrow once to display the first setting for Display Properties.

⇩

■ ■ SETTINGS ■ ■ SYSTEM SETUP	Press the MESSAGE left arrow to return to the Display Properties page, then again to return to the Product Setup Page. Press the MESSAGE down arrow to move to the next Settings page. This page contains settings for System Setup.

5.3.2.6 CHANGE SETTINGS

Numerical data

Each numerical setting has its own minimum, maximum, and increment value associated with it. These parameters define what values are acceptable for a setting.

FLASH MESSAGE **TIME: 10.0 s**	For example, select the SETTINGS > PRODUCT SETUP > DISPLAY PROPERTIES > FLASH MESSAGE TIME setting.

⇩

MINIMUM: 0.5 **MAXIMUM: 10.0**	Press the HELP key to view the minimum and maximum values. Press the key again to view the next context sensitive help message.

Two methods of editing and storing a numerical setting value are available.

- **0 to 9 and decimal point** — The relay numeric keypad works the same as a calculator. A number is entered one digit at a time. The leftmost digit is entered first and the rightmost digit is entered last. Pressing the MESSAGE left arrow or pressing the ESCAPE key, returns the original value to the display.
- **VALUE keys** — The VALUE up arrow increments the displayed value by the step value, up to the maximum value allowed. While at the maximum value, pressing the VALUE up arrow again allows the setting selection to continue upward from the minimum value. The VALUE down arrow decrements the displayed value by the step value, down to the minimum value. While at the minimum value, pressing the VALUE down arrow again allows the setting selection to continue downward from the maximum value.

FLASH MESSAGE **TIME: 2.5 s**	As an example, set the flash message time setting to 2.5 seconds. Press the appropriate numeric keys in the sequence “2 . 5". The display message changes as the digits are being entered.

⇩

NEW SETTING **HAS BEEN STORED**	Until ENTER is pressed, editing changes are not registered by the relay. Press ENTER to store the new value in memory. This flash message momentarily appears as confirmation of the storing process.

Note:
Numerical values that contain decimal places are rounded-off if more decimal place digits are entered than specified by the step value

Enumeration data

Enumeration settings have data values that are part of a set, whose members are explicitly defined by a name. A set has two or more members.

ACCESS LEVEL: **Restricted**	For example, the selections available for ACCESS LEVEL are "Restricted," "Command," "Setting," and "Factory Service."

Enumeration type values are changed using the VALUE keys. The VALUE up arrow displays the next selection while the VALUE down arrow displays the previous selection.

ACCESS LEVEL: **Setting**	If the ACCESS LEVEL needs to be "Setting," press the VALUE keys until the proper selection displays. Press HELP at any time for the context sensitive help messages.

⇩

NEW SETTING **HAS BEEN STORED**	Changes are not registered by the relay until the ENTER key is pressed. Pressing ENTER stores the new value in memory. This flash message momentarily appears as confirmation

Alphanumeric text

Text settings have data values that are fixed in length, but user-defined in characters. They can be upper-case letters, lower-case letters, numerals, and a selection of special characters.

There are several places where text messages can be programmed to allow the relay to be customized for specific applications. One example is the Message Scratchpad. Use the following procedure to enter alphanumeric text messages.

For example, enter the text “Breaker #1”.

1. Press the decimal point to enter text edit mode.
2. Press the VALUE keys until the character 'B' appears; press the decimal key to advance the cursor to the next position.
3. Repeat step 2 for the remaining characters: r,e,a,k,e,r, ,#,1.
4. Press ENTER to store the text.
5. If you have any problem, press HELP to view context sensitive help. Flash messages appear sequentially for several seconds each. For the case of a text setting message, pressing HELP displays how to edit and store new values.

5.3.3 GRAPHICAL FRONT PANEL

The graphical front panel is a hardware option. A relay with a graphical front panel can only be configured with Enervista, so if you order a relay with a graphical front panel, you also need to order EnerVista.

The graphical front panel consists of a USB port, LED panel, color screen display, user-programmable pushbuttons, and navigation keys. The graphical front panel has a seven-inch (17.8 cm) color liquid crystal display (LCD). The display is used to read data, such as metering actual values, alarms, self-test messages, and event records, and for viewing single-line diagrams. Settings can be changed on the front panel, except for the graphical front panel itself and for IEC 61850. The USB port connects to a computer with the EnerVista software and can be used to upgrade the relay and to transfer files and settings. The USB port is the square type B. User-programmable pushbuttons 9 to 40 can be programmed among the 10 pushbuttons on the left and right sides of the display.The graphical front panel is available only in the horizontal format. The following figures shows the graphical front panel.

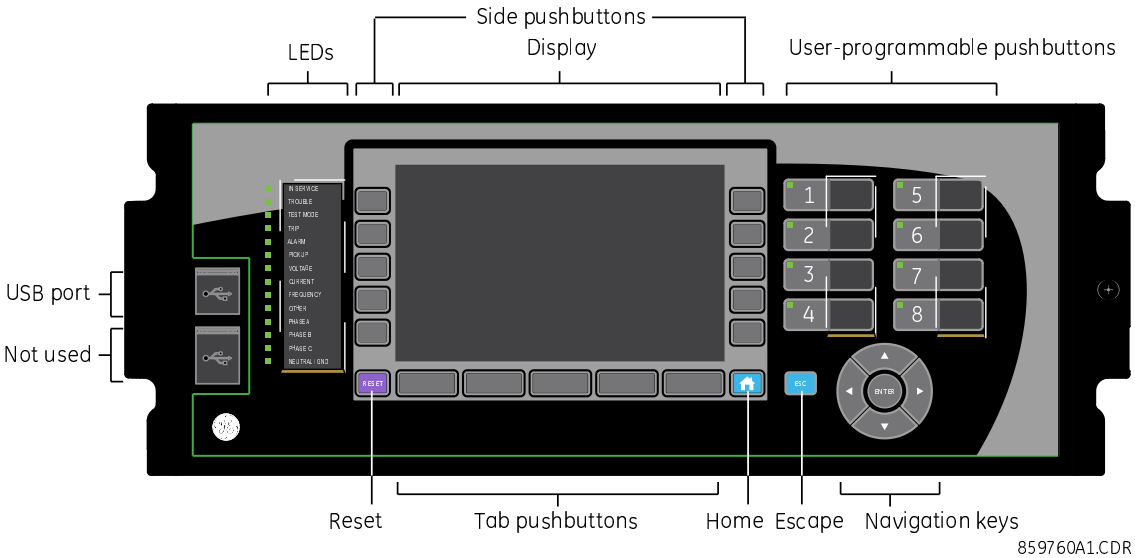

Figure 98: Graphical front panel

Header content varies by page. The home page displays any active icons, such as security status, active setting group, and active target messages. It shows the date and time of the relay. If the relay synchronizes to an external time source via PTP, IRIG-B, SNTP, and so on, the date/time is shown in white, and otherwise in yellow. On pages other than the home page, the header displays the name of the page.

The footer dynamically labels the Tab, or control, pushbuttons immediately below. Page content displays between the header and footer.

5.3.3.1 HOME PAGE

Press the **Home** pushbutton to display the root page no matter the state. Any edit, control, or password entry sessions are canceled. The header shows several relay/system status icons. The default content of the home page is the product information page, which you can configure to show the content of any single-line diagram page, annunciator page, metering page, or event records page for example. The Tab pushbuttons on the bottom row each navigate to their page. The home page displays for a user-configured time period, then scrolls through user-configured pages, a feature referred to as rolling.

Holding the **Home** pushbutton for one second displays the product information page. The Home page also can display when settings are saved.

Security indicator, showing how many people are logged in, including local and remote users. The lock is red when one or more users are logged in and other otherwise green.
When no users are logged in because login is not required, an icon does not display.

Identifies the active setting group number (not shown)

Displays when an abnormal annunciator alarm is present. Navigate to the Annunciator for details. When there are no such alarms, the icon does not display.
Even when you acknowledge/reset an alarm, the icon displays as long as the condition remains. For example, a breaker trouble alarm displays, you acknowledge it, but the icon remains because the breaker trouble remains.

ActiveTargets: defined targets symbol, where targets are error messages.
View error messages by pressing the Menu Tab pushbutton, then accessing the TARGETS menu. Pressing the RESET button clears those messages that can be.

Configure the home page in the software under **Settings > Product Setup > Graphical Panel > Home Page**. The menu does not display when there is no graphical front panel.

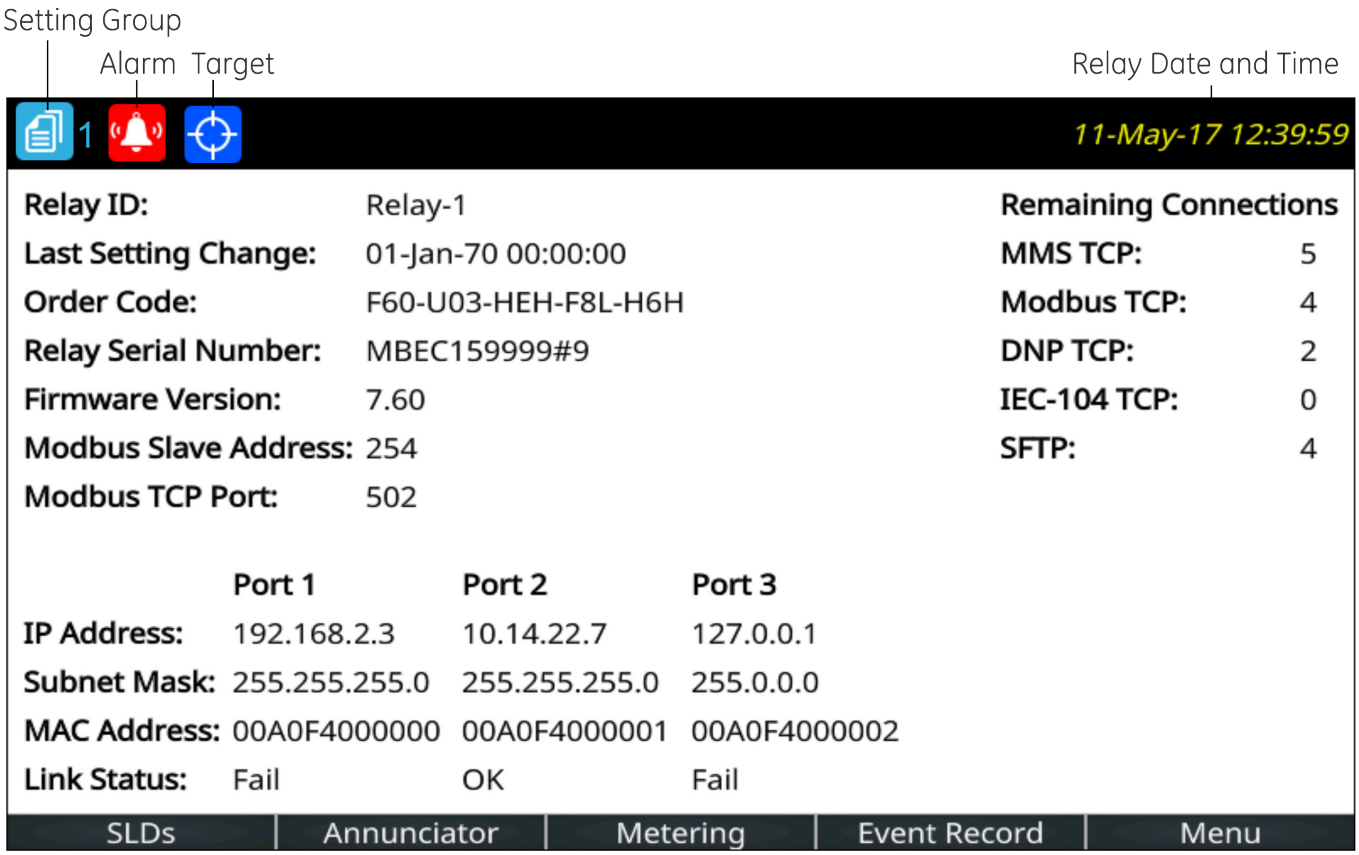

859850A1.cdr

Figure 99: Home page example with default content (product information)

5.3.3.2 ROLLING MODE

After a user-defined period of inactivity, the graphical front display rolls among up to 10 user-selected pages. The roll-to-pages are selected in the EnerVista software, with the defaults being the product information page. Each page displays for less than five seconds. Also, the display backlight intensity is lowered after a configurable period to a user-defined level (0, 10, 20, or 30%); lower intensity extends the life of the display.

Configure rolling mode in the software under **Settings > Product Setup > Graphical Panel > Rolling Mode**.

Operation works as follows:

- Press the Home pushbutton or ESCAPE pushbutton twice to cancel rolling, restore full backlight intensity, and return to the Home page
- Press the ENTER, ESCAPE, or a pushbutton to pause rolling once and restore full backlight intensity

Rolling is disabled by setting the delay to 0.

The following buttons display at the top of the window:

- Save — Updates the connected device if online or the open setting file if offline with changes made
- Restore — Undoes changes that have not been saved
- Default — Changes all rolling mode settings to their factory default values
- Reset — Displays factory default values. Previous changes are not lost unless you save the reset window.

5.3.3.3 SINGLE-LINE DIAGRAMS

A single-line diagram, or mimic diagram, is a line drawing of elements in an electrical system. The graphical front panel displays up to five single-line diagrams. Each can be configured to show the arrangement of a portion of the

power system, the status of circuit breakers and of ground and disconnect switches, user-programmable pushbuttons, and metering and status values. Each also enables control of the displayed breakers and switches when operand status assigned to the Enable Controls from GFP setting is ON.

One diagram is provided by default, single_bus_line_dsc.mif, which can be modified.

Configure the diagrams under **Settings > Product Setup > Graphical Panel > Single Line Diagram Editor**.

Each single-line diagram page has a user-configurable name that appears in the header and in the footer Tab pushbutton label. Factory default names are SLD 1 to SLD 5. Pages that have no configured content have a blank Tab pushbutton label, and the Tab pushbutton does nothing. The label for the current page has a blue background.

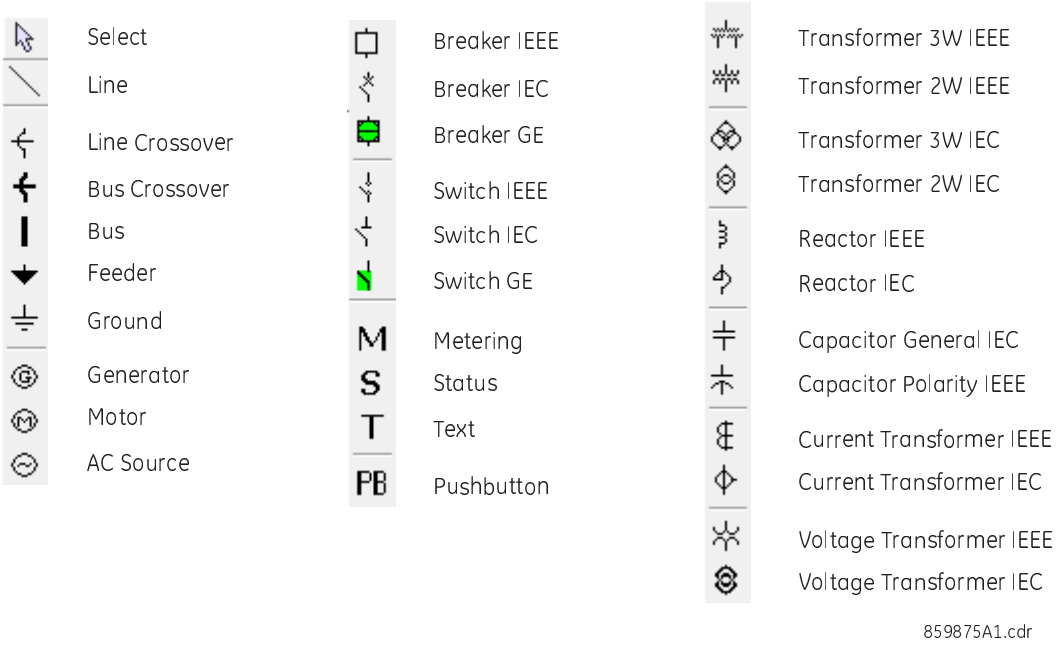

Figure 100: Toolbar options for single-line diagram

The letters T, S, B, R, and X next to a controllable element have the following meaning. An example (TSB) is shown in the next figure.

- T — The element is “tagged” (irrespective of whether it is tagged from graphical front panel or via IEC 61850). Local and remote control of the device are inhibited, both open and close. Tripping is unaffected unless additional logic has been configured.
- S — The position indication of the device is substituted with a manually entered value
- B — Blocking open/close command is bypassed
- R — Autoreclose is enabled and not blocked
- X — The device is out-of-service and control is not available

5.3.3.4 SINGLE-LINE DIAGRAM EXAMPLE

The following example outlines how to create a circuit breaker diagram, then how to close the second circuit breaker. The figure shows six switches (SW, M), two breakers (CB), feeder (arrow), and ground (lined arrow).

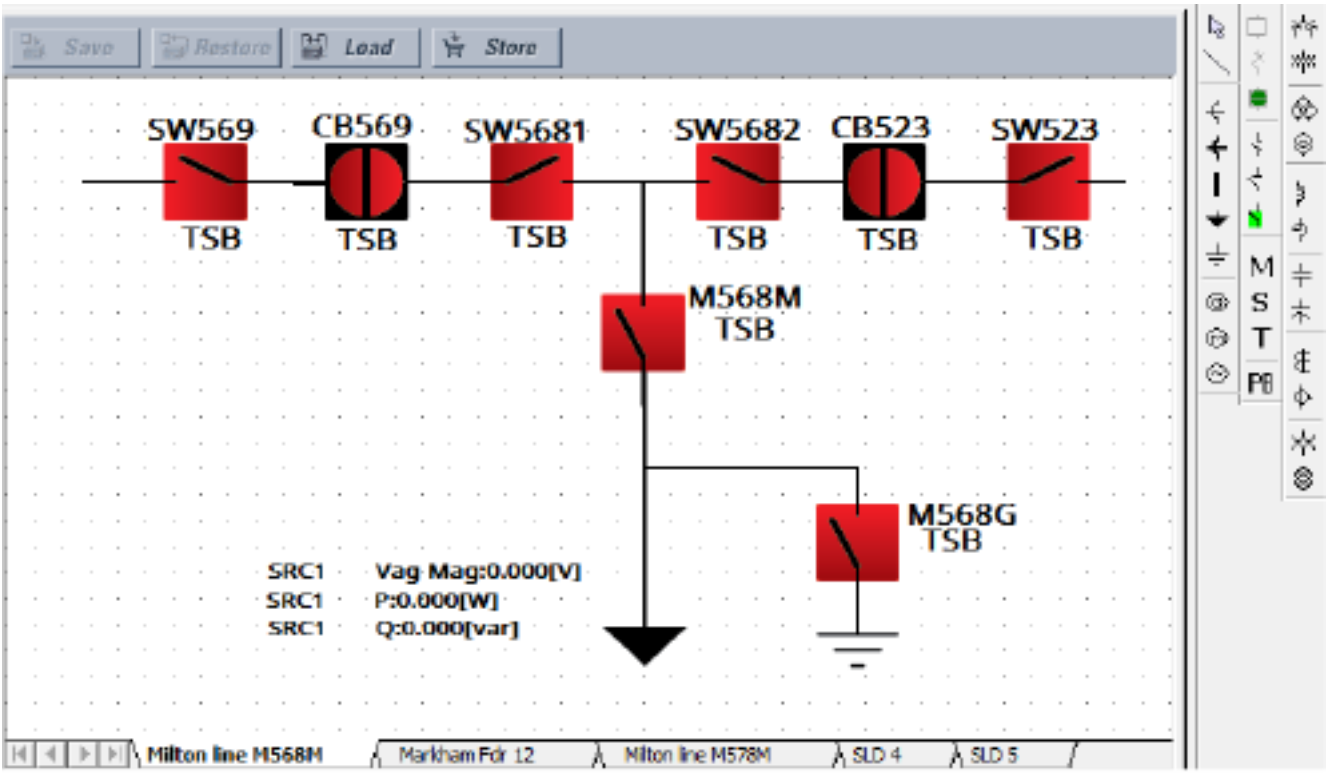

859853A2

Figure 101: Single-line diagram of open circuit breakers

Under **Settings > System Setup > Switches and Breakers**, enable and name the six switches and two breakers. Switch 6, M568G, has the A/3 Pole Opened setting on.

Save | Restore | Default | Reset | VIEW ALL mode

SETTING	PARAMETER
Breaker 1 Function	Enabled
Breaker 1 Push Button Control	Enabled
Breaker 1 Tagging	Enabled
Breaker 1 Substitution	Enabled
Breaker 1 Bypass	Enabled
Breaker 1 AR Block	Enabled
Breaker 1 Name	CB569
Breaker 1 Mode	3-Pole
Breaker 1 Open	OFF
Breaker 1 Block Open	OFF
Breaker 1 Close	OFF
Breaker 1 Block Close	OFF
Breaker 1 Phase A/3-Pole Closed	ON
Breaker 1 Phase A/3-Pole Opened	OFF
Breaker 1 Phase B Closed	OFF

859886A1

Save | Restore | Default | Reset | VIEW ALL mode

SETTING	PARAMETER
Switch 1 Function	Enabled
Switch 1 Name	SW569
Switch 1 Mode	3-Pole
Switch 1 Open	OFF
Switch 1 Block Open	OFF
Switch 1 Close	OFF
Switch 1 Block Close	OFF
Switch 1 Phase A/3 Pole Closed	ON
Switch 1 Phase A/3 Pole Opened	OFF
Switch 1 Phase B Closed	OFF

859887A1

Switch 6 Function	Enabled
Switch 6 Name	M568G
Switch 6 Mode	3-Pole
Switch 6 Open	OFF
Switch 6 Block Open	OFF
Switch 6 Close	OFF
Switch 6 Block Close	OFF
Switch 6 Phase A/3 Pole Closed	OFF
Switch 6 Phase A/3 Pole Opened	ON
Switch 6 Phase B Closed	OFF
Switch 6 Phase B Opened	OFF

859888A1

Figure 102: Configure Breaker and Switch settings

In the EnerVista software, open the single-line diagram editor under **Settings > Product Setup > Graphical Panel > Single Line Diagram Editor**.

Add the four switches for the top line by clicking the GE switch symbol in the toolbar, then clicking in the window. (If the UR device is not online, the software attempts to connect.) Right-click to edit properties. Rotate switches SW569 and SW5682 to 270 degrees. Rotate switches 5681 and SW523 to 90 degrees. Ignore the TSB text.

Add the two lower switches. Leave rotation at 0 degrees.

Add the two breakers by clicking the GE breaker symbol in the toolbar, then click in the window. Right-click to edit properties, rotating 90 degrees and setting the color to red (open).

Draw lines to fill in the gaps between the switches and breakers by clicking the line symbol in the toolbar, then clicking and dragging on the canvas to draw a line. Do not draw a single line for the top line, but instead draw several small lines.

Add the feeder arrow head by clicking the symbol in the toolbar, then clicking the end of the line.

Add the ground symbol by clicking the symbol in the toolbar, then clicking the end of the line.

Add three metered values by clicking the M symbol in the toolbar, then clicking near the feeder arrow. Double-click to edit. The three metered values are SRC1 Vag Mag, SRC 1 P, and SRC 1 Q.

Name the page by right-clicking the bottom tab. Here, page 1 is renamed "Milton line M568M."

Note that active symbols in the toolbar display and those that are inactive are greyed-out.

The diagram has been created. Save it by clicking the **Save** button.

Next is to close circuit breaker CB523. This circuit breaker is shown at the top right of the figure. A vertical line means that it is open, and the color can be set as red or green.

On the graphical front panel, press the Home pushbutton, then press the SLDs pushbutton to activate the first single-line diagram page.

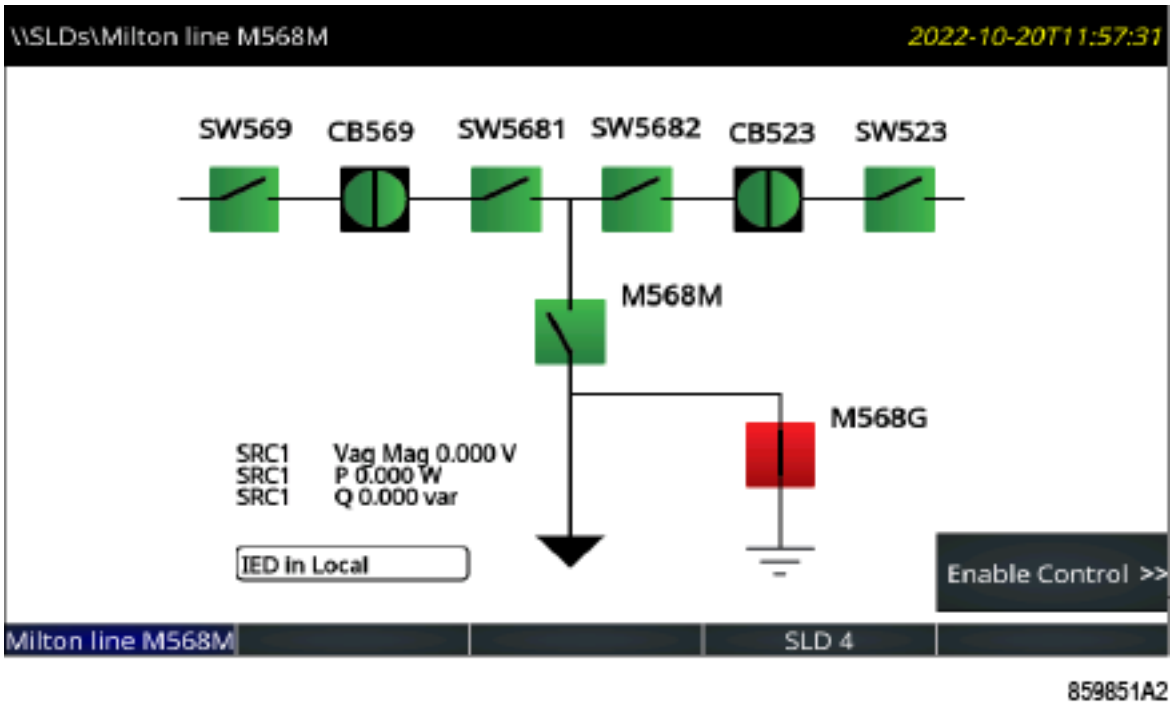

Figure 103: Single-line diagram on graphical front panel

Press the Enable Control pushbutton, which displays when the **Settings > Product Setup > Graphical Panel > Home Page > Enable Controls From GFP** setting is configured and its FlexLogic operand is ON. The side pushbutton labels display.

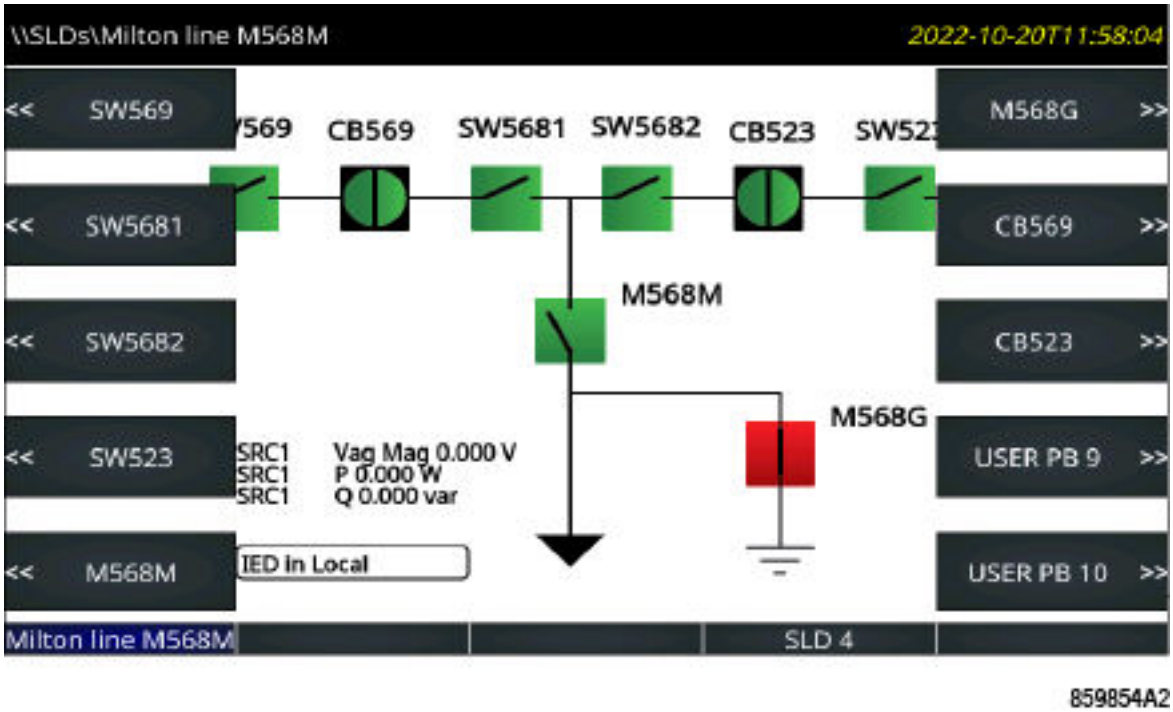

Figure 104: Side pushbutton display on graphical front panel

Press the **CB523** breaker pushbutton. Its menu displays.

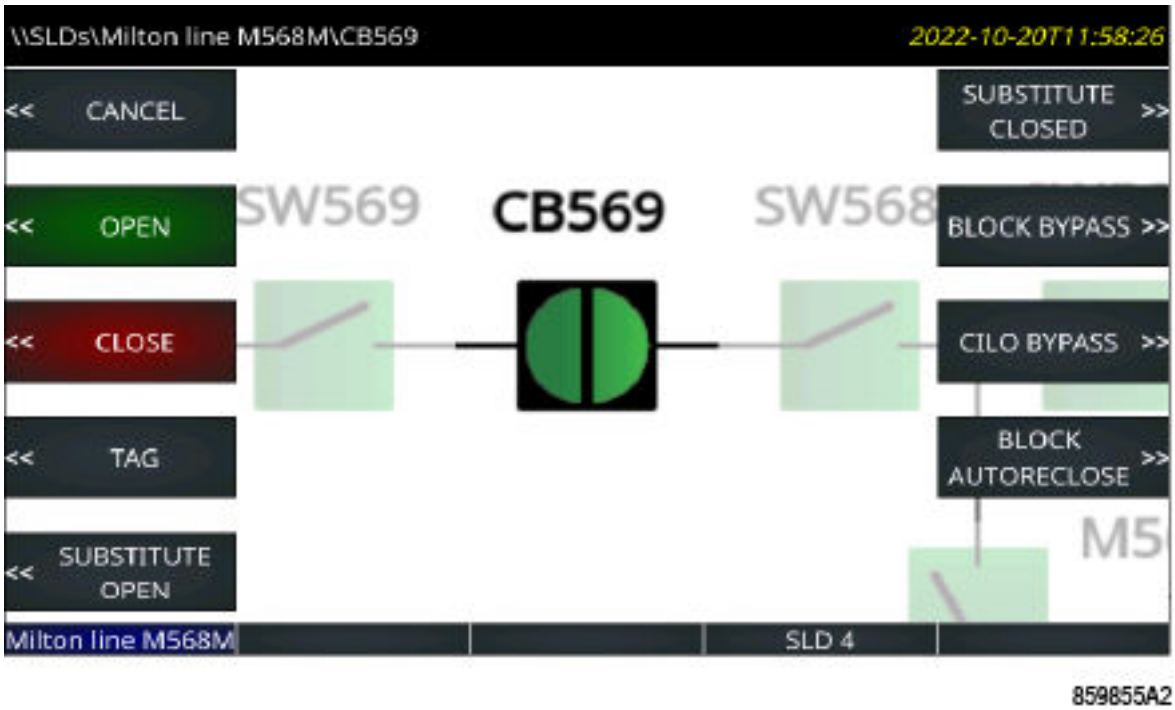

Figure 105: Pushbuttons to control the breaker

Press the pushbutton to close the breaker, confirming the action at the prompt.

> *Note:*
> *If at the prompt the control action is prevented this is because status of the operand assigned to the **Enable Controls From GFP** setting has changed back to OFF before confirming the prompt action. As a result, the command is not issued, and the screen goes to the top SLD page.*

In this diagram, the two circuit breakers have hard-coded actions available to them. No action is possible on the switches.

Observe the USER PB 9 and 10 entries in the earlier figure. As outlined later, these are activated by clicking the PB icon on the software toolbar. These two pushbuttons can be configured under **Settings > Product Setup > User-Programmable Pushbuttons**.

When a breaker is tagged, the letter T displays under the breaker in the diagram. The **Tag** pushbutton shown toggles to **Remove Tag**.

5.3.3.5 SINGLE-LINE DIAGRAM EDITOR

Start the application in the EnerVista software under ***Settings > Product Setup > Graphical Panel > Single Line Diagram*** Editor.

The following buttons display at the top of the window:

- Save — Updates the connected device if online or the open setting file if offline with changes made
- Restore — Undoes changes that have not been saved
- Load — Opens single-line diagram files, which replaces one or all windows with that in the file selected
- Store — Saves all single-line diagrams as a `.mif` file. Because single-line diagrams are not retained when using the **Convert Device Settings** function, for example when converting in the Offline Window area from version 7.6 to 7.7, GE recommends making backup files using this function.

On the right side of the window is a toolbox containing the components that can be added to the window. These include line, breaker, disconnect, metering value, status value, text, and miscellaneous power system elements. To create the single-line diagram, click the symbol, then click in the window. Once in the window, the component can be positioned and its properties modified. When using the pointing device to position a component, the component can snap to the nearest snap point. Snap points are in a 4 x 4 rectangular grid. The keyboard arrow keys move the selected component(s) in one pixel increments when snap locations are inadequate. Multiple components can be selected and moved or deleted as a group, or copied and pasted to another location. Right- or double-clicking a component opens the properties window.

Ctrl+A selects all objects in a diagram.

Lines

Line components represent power system busses or electrical connections between power system elements. They can also be used as visual dividers and underline.

To add a line component, click it in the toolbox, then click in the window. Double-click a line to open its properties window to set orientation.

Static symbols

Static symbols depicting power system elements are available. For information, see the ANSI/IEEE 315A and IEC 60617 standards.

Up to 32 static symbols can be used per single-line diagram.

To add a symbol, click it in the toolbox, then click in the window. Double-click the symbol to open its properties window to set orientation.

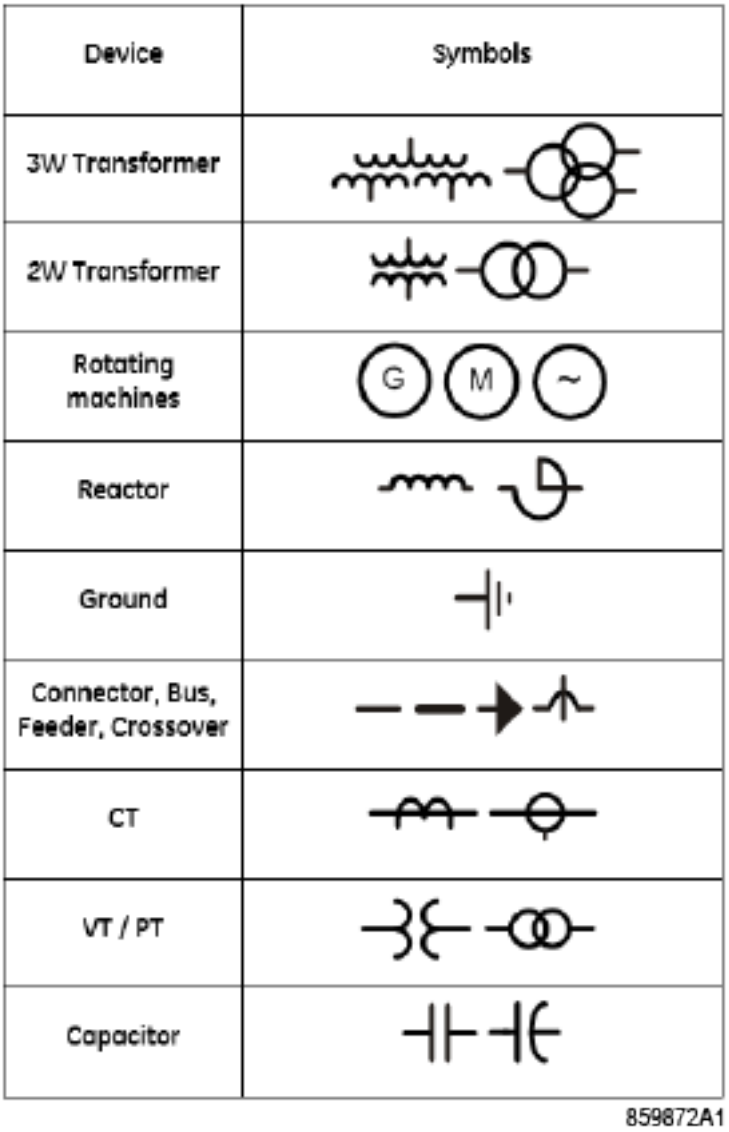

Figure 106: IEEE and IEC static symbols

Breaker and disconnect components

Breaker components and disconnect components are interfaces to the UR breaker control elements and disconnect switch elements. On a UR device they show dynamically the breaker or disconnect status as calculated by the element, and provide means to open, close, tag, bypass interlock, and substitute (force status of) the element. Breaker components in addition provide means to enable/disable breaker autoreclose.

Each breaker and disconnect component can be configured to use UR-style symbols, IEC symbols, or simple square/slash symbols as shown in the following figure. The symbols assume horizontal symbol orientation, red - closed color, and green - open scheme. With vertical orientation, they are rotated 90 degrees.

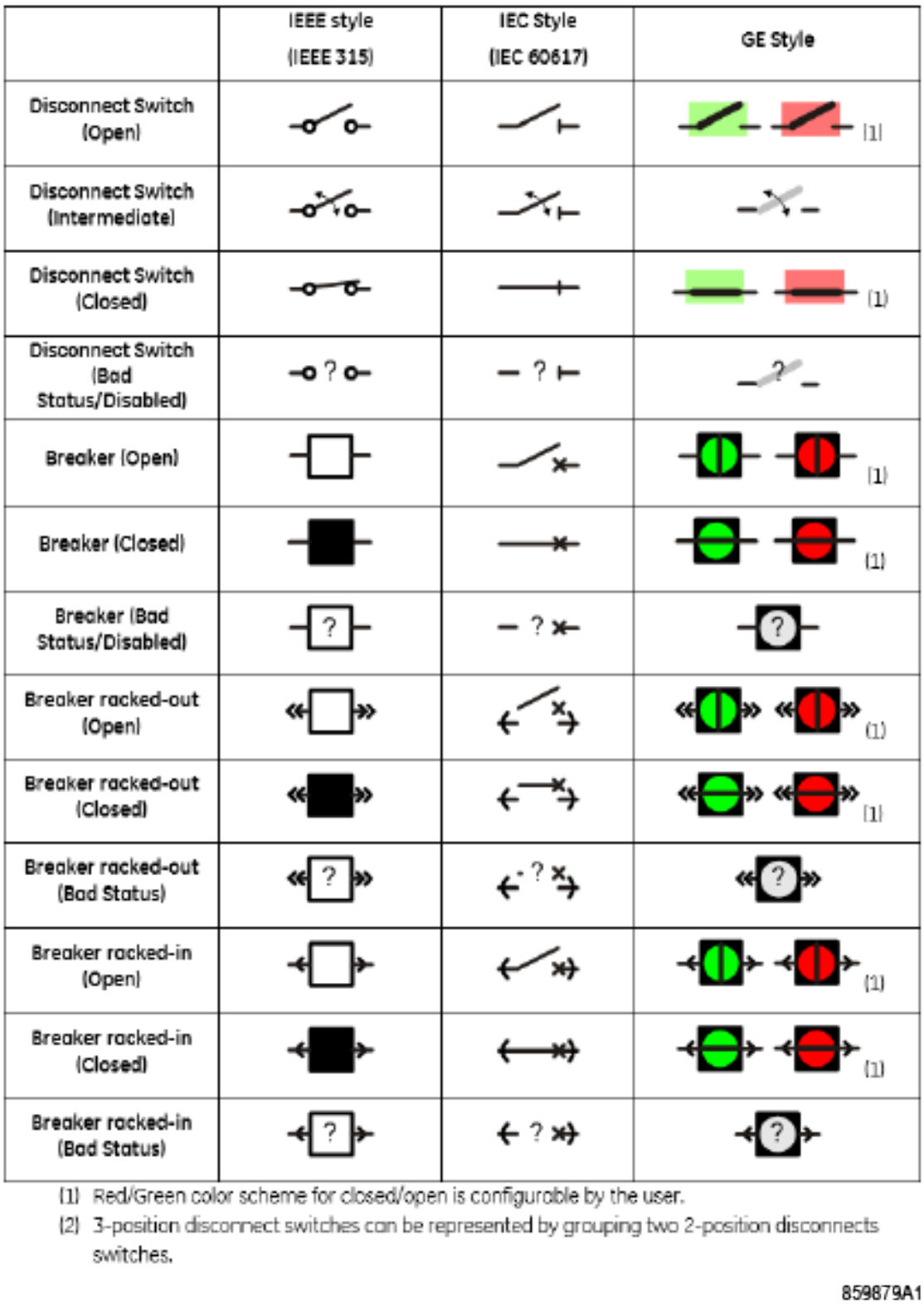

Figure 107: Single-line diagram symbols

To add a breaker or disconnect component, click it in the toolbox, then click in the window. Up to 10 dynamic components can be added to each single-line diagram.

Breaker and disconnect components have three different parts: label, symbol, and flags. Drag each of its parts to their final locations. Double or right-click any of these parts to open the properties window. Properties that can be

edited are label text, breaker control element or disconnect switch element number, symbol orientation (horizontal or vertical), color scheme (red - closed, or red - open), and assigned side button (if any). If the selected breaker or disconnect element does not exist in the target relay or has not been enabled, then the component is displayed in the graphical front panel and in the drawing edit window in grey. The color scheme selection has no effect when an IEC style symbol is used because IEC style symbols do not use color.

Symbol orientation

The figure shows the orientation available for the breaker and disconnect switch (taking Open status as examples). The default position is 0 degrees.

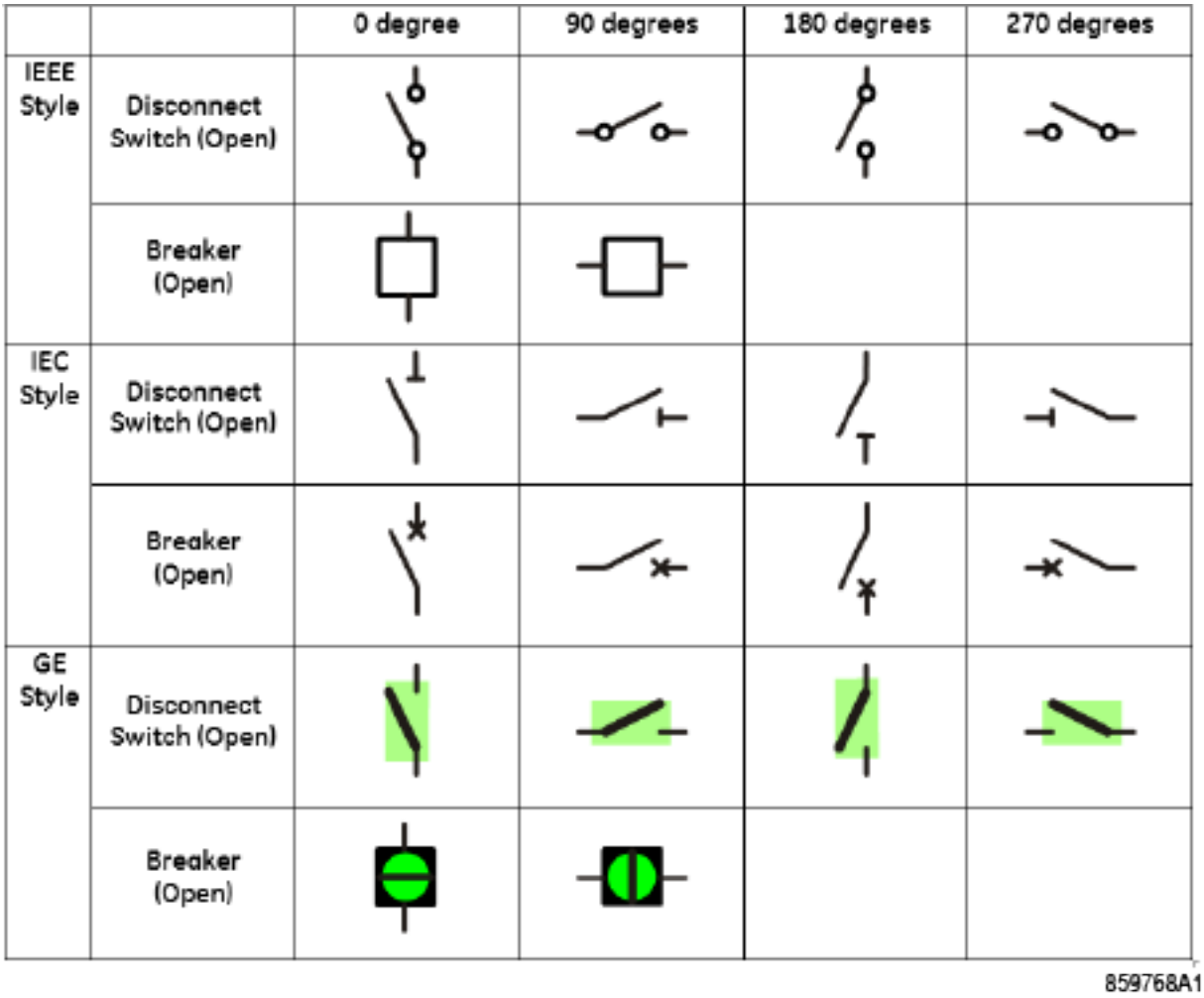

Figure 108: Single-line diagram symbol orientation

A question mark displays in a symbol on the graphical front panel when status is bad. The question mark does not rotate with orientation. The following figures show the orientation available for the static components. The default position is 0 degrees.

	0 degree	90 degrees	180 degrees	270 degrees
3W Transformer				
2W Transformer			0 degree	90 degrees
3W Transformer				
2W Transformer			0 degree	90 degrees
Rotating machines	G M ~	0 degree	0 degree	0 degree
Reactor			0 degree	90 degrees
Reactor				
Capacitor				
Capacitor			0 degree	90 degrees

859770A1

Figure 109: Single-line diagram static symbol orientation (sheet 1 of 2)

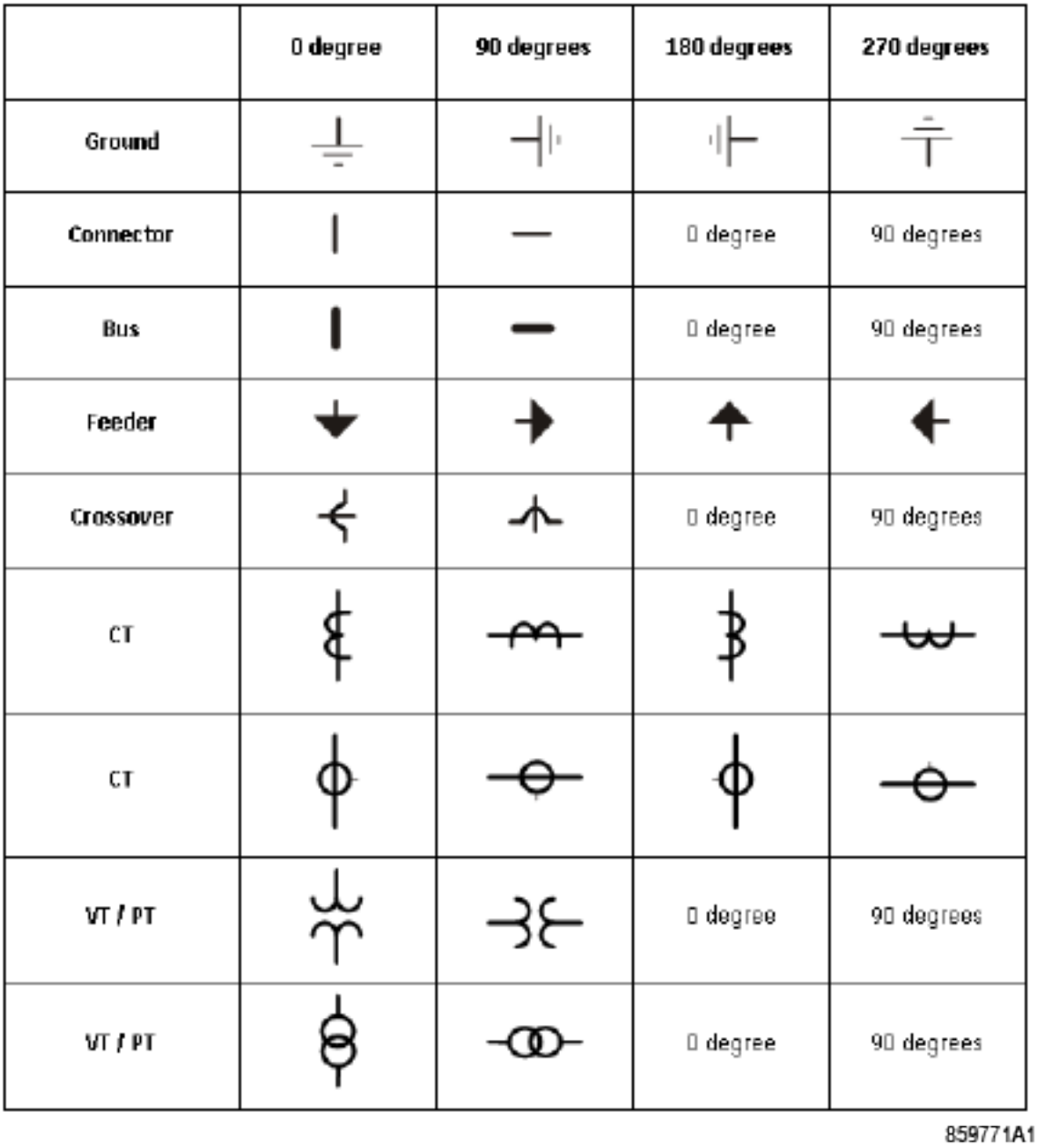

Figure 110: Single-line diagram static symbol orientation (sheet 2 of 2)

User-programmable pushbuttons

User-programmable pushbuttons 1 to 8 are physical pushbuttons on the right side of the graphical front panel, numbering down the two columns.

Any remaining user-programmable pushbuttons are programmed among the 10 pushbuttons on the left and right sides of the screen display. They show dynamically and provide a means to perform the same control as the other pushbuttons.

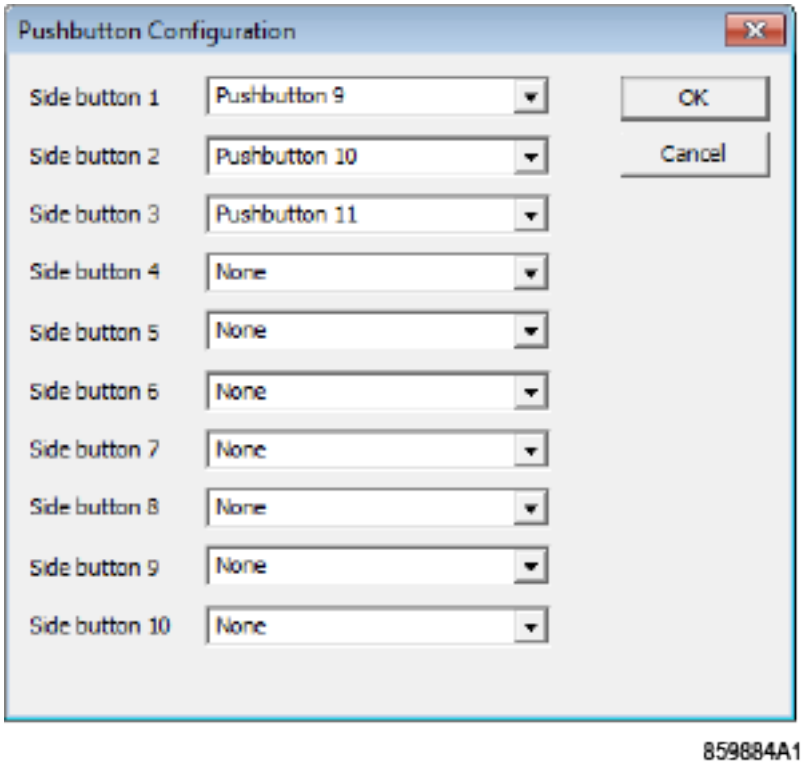

Figure 111: Assigning pushbuttons to the display

As an example, if you set up a single-line diagram with two breakers and six switches, then eight of the side pushbuttons are used automatically for control of the breakers and switches. Side pushbuttons 9 and 10 are available. In the single-line diagram, let us set side pushbutton 9 to clear event records as follows:

- Show side pushbutton 9 on the graphical front panel — Click the PB symbol in the toolbar, then set Side button 9 to pushbutton 9 in the drop-down list. This pushbutton then displays when appropriate on the right side of the screen display.
- Program event record clearing — Set **Settings > Product Setup > Clear Relay Records > Clear Event Records** to FlexLogic operand PUSHBUTTON 9 ON
- Program pushbutton 9 — Set **Settings > Product Setup > User-Programmable Pushbuttons > Pushbutton 9 Function** to "Self-reset." When pressed, pushbutton 9 clears the event records.

To instead set the second user pushbutton (not a side pushbutton) to clear events, follow the second and third bullet points, selecting settings of PUSHBUTTON 2 ON and Pushbutton 2.

Metering components

Metering components show dynamically the value of a FlexAnalog operand or actual value. Up to 16 metering components can be added to each single-line diagram.

To add a metering component, click the M symbol in the toolbox, then click in the window. Drag it to its final location. Double-click it to open the properties window. The figure shows the properties that can be edited.

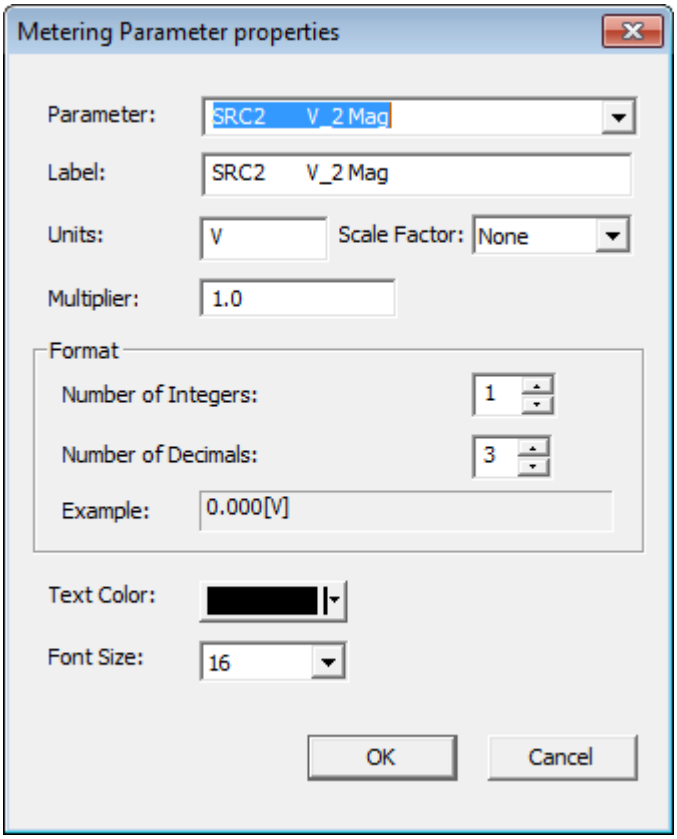

Figure 112: Metering properties

Status components

Status components show dynamically the value of a FlexLogic operand. Up to 16 can be used in a diagram and 30 in all single-line diagrams.

An example is to show the Off or On state of the ANY MAJOR ERROR FlexLogic operand. The name of the operand displays in the single-line diagram editor, then as Off or On on the graphical front panel.

To add a status component, click the S symbol in the toolbox, then click in the window. Drag it to its final location. Double-click it to open the properties window. Properties that can be edited include parameter (any FlexLogic operand), text color background color, and on and off text.

Optionally add a text label to display beside the status.

Text

Text components show a single line of user-configured text.

Up to 16 text components can be used per single-line diagram.

To add a text component, click the T symbol in the toolbox, then click in the window. Drag it to its final location. Double-click it to open the properties window. Properties that can be edited are text, color, and size.

5.3.3.6 ANNUNCIATOR

An annunciator is a grid of small windows for alarms, actual values, self-test messages, and product information.

The graphical front panel emulates a conventional annunciator panel. The annunciator has 96 windows, each with a description of the alarm condition that lights the window. The windows are arranged in rows and columns of 3 x 4, 4 x 6, or 6 x 8 over several pages. Each window can have up to three lines of configurable text, and one line can instead be a metered value. Normally the window background is dark, and when the configured FlexLogic operand becomes On, the window lights up.

The figure shows that two alarms are active. One alarm is configured red and the other alarm is configured blue. The red alarm type is Self Reset, so the alarm displays in a solid color. The blue alarm type is Acknowledgeable, so the alarm flashes until it is acknowledged, for example by navigating with the arrow keys and pressing the ENTER button. The alarm then remains blue until the trigger condition is eliminated.

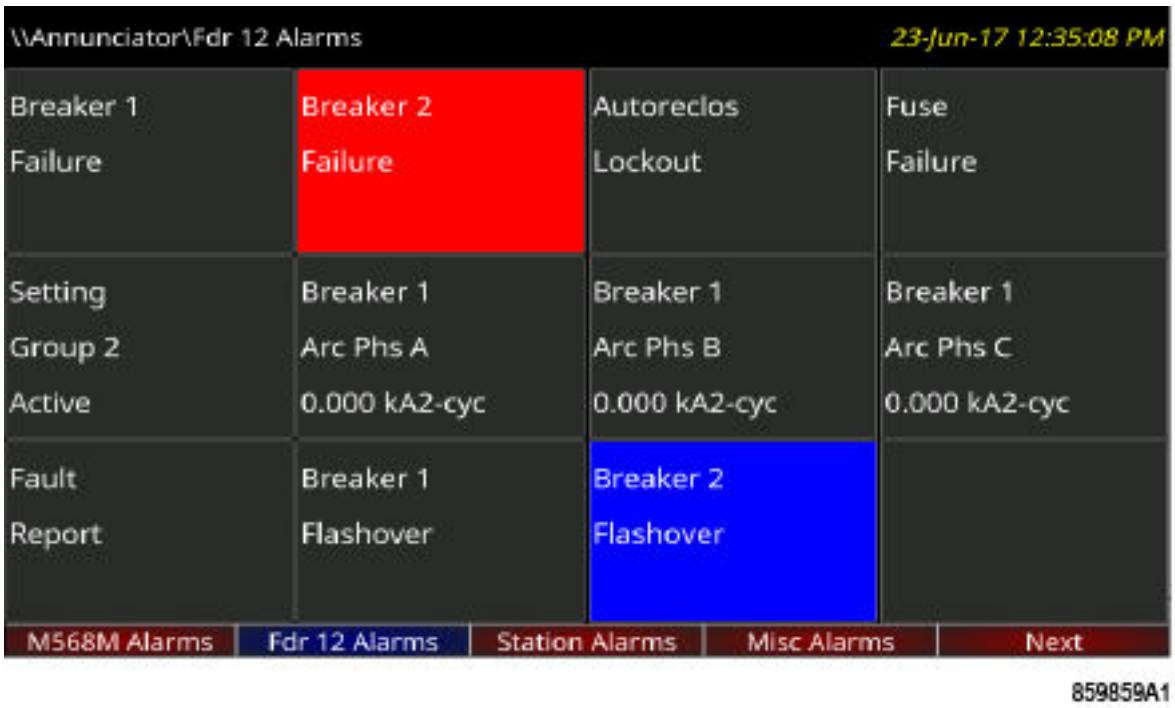

Figure 113: 3x4 annunciator page with two active windows

To display the annunciator, press the Home pushbutton, then the Annunciator Tab pushbutton. If there is one or more window in alarm or requiring reset, the annunciator page showing the first of these opens. Otherwise the first annunciator page opens.

Alarms do not display automatically. Set the Home page and/or rolling pages to display annunciator pages. The Tab pushbutton labels populate with the annunciator pages. The label text for each annunciator page is configurable and displays in the header and Tab label. The current page has a blue Tab label. Tab labels for annunciator pages that have an active window (that is, on, latched, or unacknowledged) are red. Pages where alarms are not triggered have a grey Tab label. Pages that have no configured windows do not have Tab pushbuttons and do not display.

The Up, Down, Left, and Right pushbuttons cause the selection to move one window in the indicated direction. Pressing the Right pushbutton past the last window in a row scrolls the display to any next annunciator page, not the next row. The behavior is similar for the other pushbuttons, for example pressing the Up pushbutton while in the top row goes to any previous page. If no previous page exists, no action occurs.

Annunciator windows are positioned statically, so that all windows are visible no matter their state.

Alarm types of each window can be configured as Self Reset, Latched, or Acknowledgeable. In Self Reset mode, the window lighting follows the state of the configured FlexLogic operand. The self-reset mode alarm sequence conforms to ISA-18.1-1979 (R2004) standard type A 4 5 6.

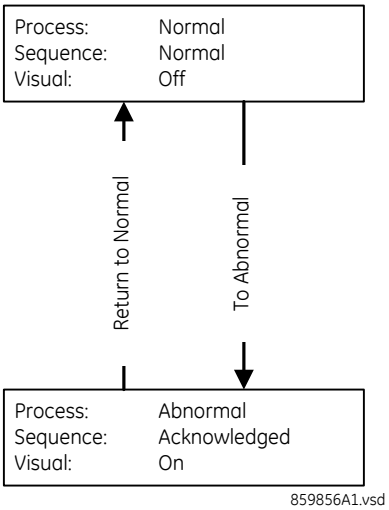

Figure 114: Annunciator alarm sequence in Self Reset mode

Latched mode is intended for transient signals such as trip, and it conforms to ISA-18.1-1979 (R2004) standard type M6.

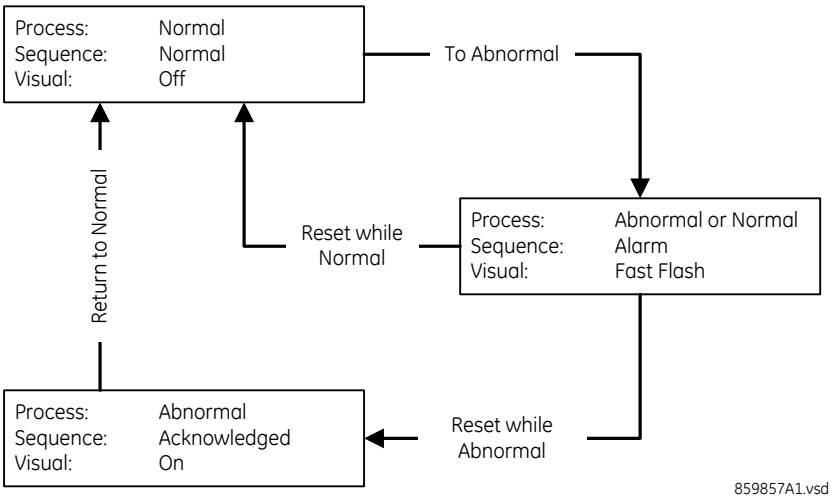

Figure 115: Annunciator alarm sequence in Latched mode

In Acknowledgeable mode, both Off to On and On to Off state changes in the configured operand cause the background to flash; the window must be acknowledged/reset to cancel flashing. This mode conforms to ISA-18.1-1979 (R2004) standard type R-6.

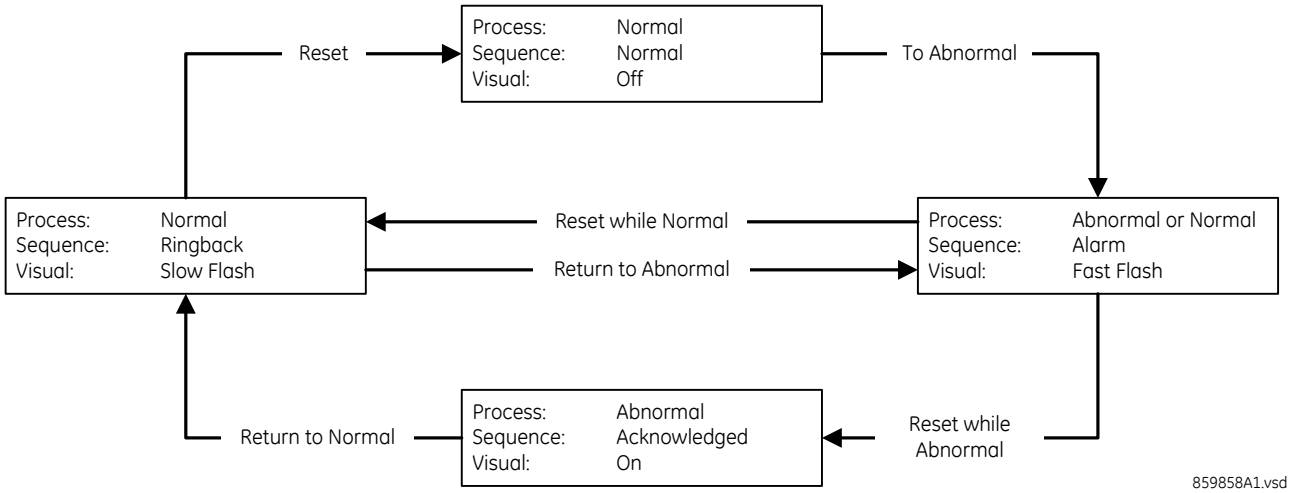

Figure 116: Annunciator alarm sequence in Acknowledgeable mode

To reset all annunciator windows:

- In the software, access ***Actual Values > Graphical Panel > Annunciator Panel***

To acknowledge/reset all annunciator windows on a page:

- On the graphical front panel with none of the annunciator windows selected, press the **RESET** pushbutton once for acknowledgement and twice for reset. The flashing stops.

To acknowledge an annunciator window:

- On the graphical front panel, press the Up, Down, Left, and Right pushbuttons to select the window, so that is has a yellow outline. Press the RESET or ENTER pushbutton. While a window is selected, if that window has activated since the last restart, the date/time of the last activation of that window displays in the header.

An alarm remains in an alarm state (for example, displays red) when the condition remains. That is, if you acknowledged a flashing alarm but the alarm condition remains, the background color remains red.

The ***SETTINGS > INPUTS/OUTPUTS > RESETTING > RESET ANNUNCIATOR*** setting can be used to select a FlexLogic operand that when activated acknowledges/resets all annunciator windows.

5.3.3.7 ANNUNCIATOR EDITOR

The annunciator editor is used to configure alarms and actual value displays for the graphical front panel.

The path in the EnerVista software is **Settings > Product Setup > Graphical Panel > Annunciator Editor**.

The figure shows the annunciator editor and its preview window. The page name is entered as General at the top right. Acknowledgeable and self-resetting alarms are set for basic functions, such as online/offline, Ethernet ports, unauthorizedaccess/failed logins, and battery failure. The text to display in the annunciator window is entered. The IN SERVICE LED is set to be green because when the device is on, this LED is green. The preview shows what the annunciator looks like with all alarms triggered. The last window is not configured and displays blank/grey. In order for the Ethernet and battery alarms to work, the corresponding self-test alarms have been enabled under **Settings > Product Setup > User-Programmable Self Tests** (not shown). The LEDs can be viewed on the front panel, so adding them to the annunciator is for illustrative purposes only.

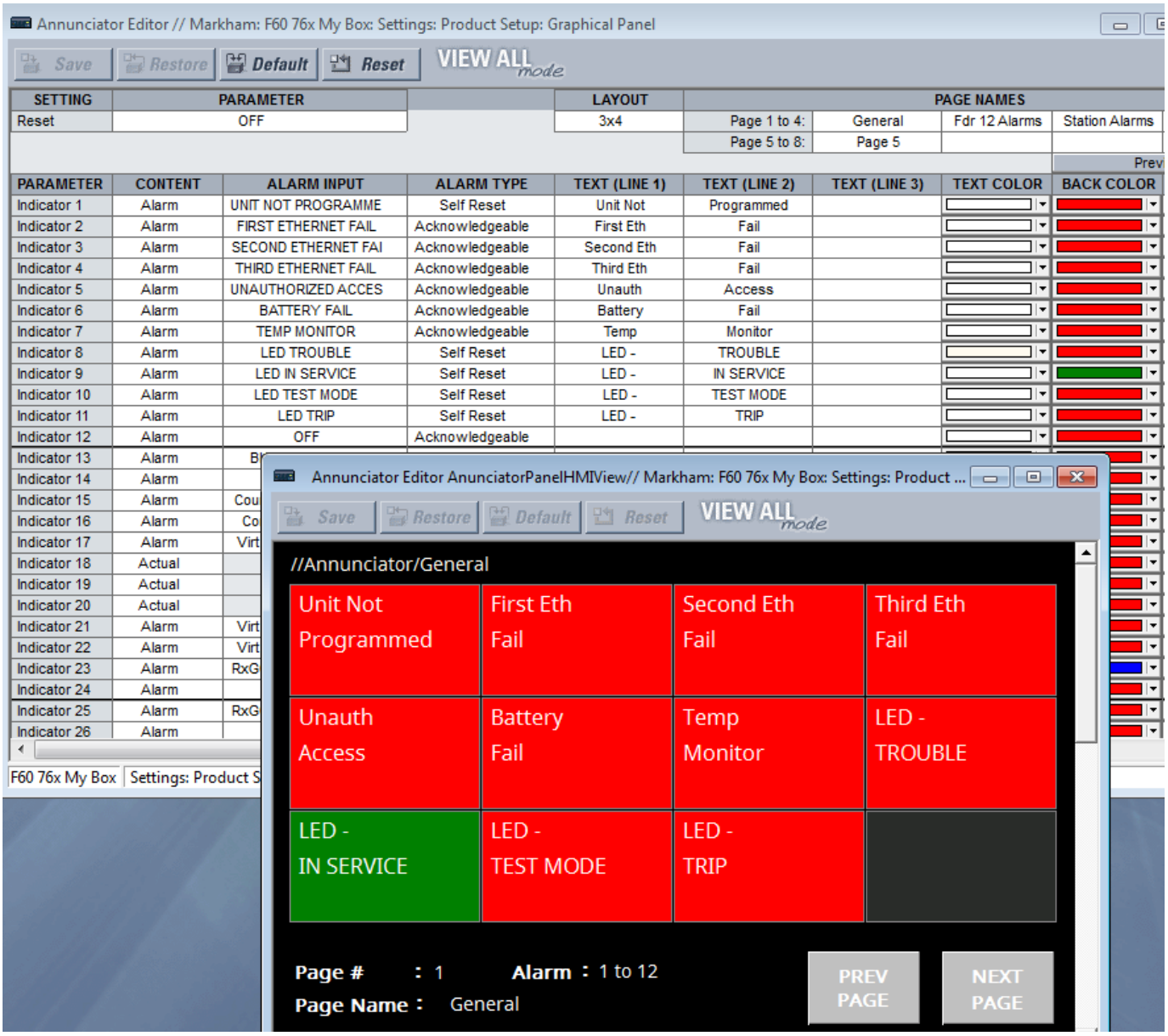

Figure 117: Annunciator editor and preview window

The three page layouts (3 × 4, 4 × 6, and 6 × 8) select the number of rows x columns of windows that appear in a page. Annunciator window size and text size shrink as the number of annunciator windows in a page increases.

Properties that can be edited include alarm type (acknowledgeable, latched, self-reset), alarm input (any FlexLogic operand), text color, and alarm background color.

The following buttons display at the top of the window:

- **Save** — Updates the connected device if online or the open setting file if offline with changes made
- **Restore** — Undoes changes that have not been saved
- **Default** — Changes all annunciator settings to their factory default values
- **Reset** — Displays factory default values. Previous settings are not lost unless you save the reset window.

5.3.3.8 METERING EDITOR

The metering editor is an actual values display tool. It creates pages of actual values for the graphical front panel. Thereare two types: tables and phasor diagrams. Tabular actual values pages have settings to configure, while phasor actual values pages have no settings. Five tabular metering pages can be configured, while there can be a phasor page for each configured AC source. They display on the graphical front panel using the Metering Tab pushbutton.

The path to the editor is **Settings > Product Setup > Graphical Panel > Metering Editor**.

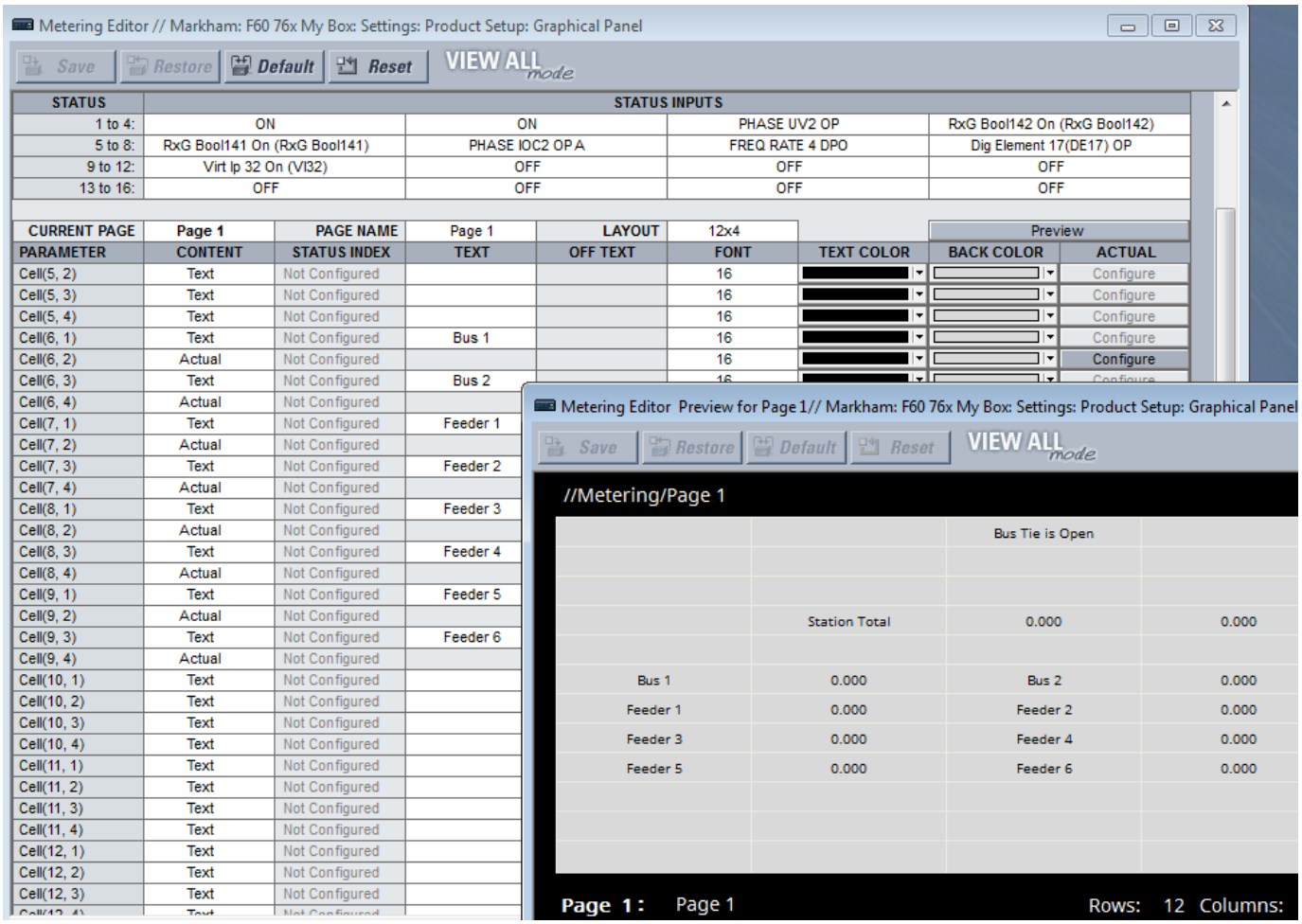

Figure 118: Metering editor with preview window

The inputs are selected at the top. Select from the drop-down list or start typing in the field.

The page, page name, and grid layout are set below the inputs.

Content to display is configured with the cell lines. The content can be actual values, a status indicator, or text.

- Actual value — Select from the FlexAnalogs applicable to the relay, where a FlexAnalog is an analog parameter
- Status — Select from the FlexLogic operands identified in the Status Inputs at the top of the window. An example is to display text to indicate whether the BATTERY FAIL operand is on or off.
- Text — Enter text to display in the table, for example name of table or column heading

If the metering input is other than OFF, the value of the selected metering input displays, formatted according to the size, text color, units, multiplier, and decimal configuration. Otherwise either the Text or the Off Text displays depending on the value of the operand selected by setting Status Input/Index.

A maximum of eight Status Inputs/Indexes can be used per metering page and 16 in all metering pages.

The following buttons display at the top of the window:

- **Save** — Updates the connected device if online or the open setting file if offline with changes made
- **Restore** — Undoes changes that have not been saved
- **Default** — Changes all actual value settings to their factory default values
- **Reset** — Displays factory default values. Previous settings are not lost unless you save the reset window.

5.3.3.9 CONFIGURABLE NAVIGATION EDITOR

Configurable Navigation is a feature that opens specified pages when specific FlexLogic operands are activated. This feature is useful to open the annunciator page containing an annunciator window that has entered its abnormal state.

In the example shown, failure of any of the three Ethernet ports triggers the Product Information page to display. With unauthorized access (such as wrong password), IRIG-B clock failure, or breaker trouble, the Event Records display. When a breaker opens, a single-line diagram displays. For the Ethernet and IRIG-B failure pages to work, these functions also have been enabled under **Settings > Product Setup > User-Programmable Self Tests**. For the breaker trouble, the single-line diagram has been configured.

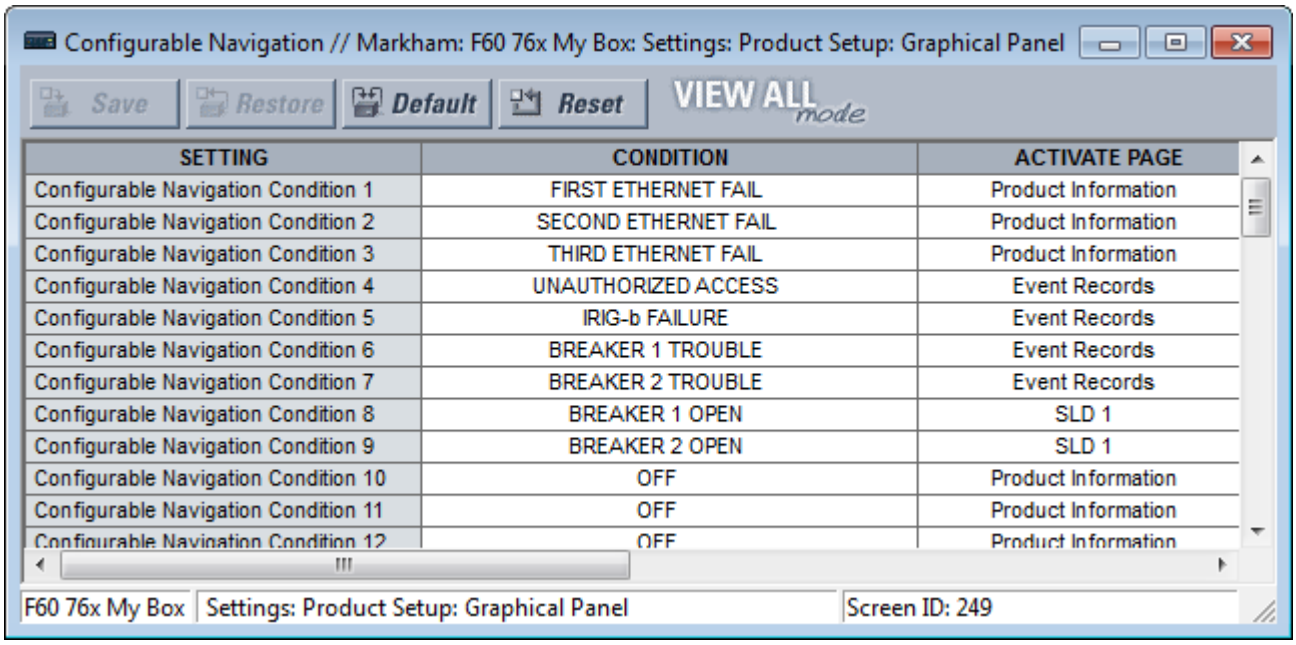

SETTING	CONDITION	ACTIVATE PAGE
Configurable Navigation Condition 1	FIRST ETHERNET FAIL	Product Information
Configurable Navigation Condition 2	SECOND ETHERNET FAIL	Product Information
Configurable Navigation Condition 3	THIRD ETHERNET FAIL	Product Information
Configurable Navigation Condition 4	UNAUTHORIZED ACCESS	Event Records
Configurable Navigation Condition 5	IRIG-b FAILURE	Event Records
Configurable Navigation Condition 6	BREAKER 1 TROUBLE	Event Records
Configurable Navigation Condition 7	BREAKER 2 TROUBLE	Event Records
Configurable Navigation Condition 8	BREAKER 1 OPEN	SLD 1
Configurable Navigation Condition 9	BREAKER 2 OPEN	SLD 1
Configurable Navigation Condition 10	OFF	Product Information
Configurable Navigation Condition 11	OFF	Product Information
Configurable Navigation Condition 12	OFF	Product Information

Figure 119: Navigation editor

The path is **Settings > Product Setup > Graphical Panel > Configurable Navigation**.

The settings consist of 64 field pairs, each with a condition and an activation page. The condition selects any FlexLogic operand. The activation page selection is the standard set, such as product information, event records, annunciator pages, and single-line diagrams.

To use the feature, select a CONDITION, select its ACTIVATE PAGE option, then save. When selecting the condition operand, open the drop-down list and start typing in the field to auto-fill. For example, typing F displays FIRST ETHERNET FAIL.

The following buttons display at the top of the window:

- **Save** — Updates the connected device if online or the open setting file if offline with changes made
- **Restore** — Undoes changes that have not been saved
- **Default** — Changes all settings in the window to factory default values
- **Reset** — Displays factory default values. Previous settings are not lost unless you save the reset window

5.3.3.10 NAVIGATION KEYS

Up/Down/Left/Right — These pushbuttons move the selector among the options on a page. The selection is indicated by a yellow background or a yellow border. On menu pages, the Right pushbutton activates the selected submenu drilling down the menu hierarchy, and the Left pushbutton backs up the menu hierarchy. These pushbuttons have a typematic feature on some pages: after a short pause, the pushbutton repeats as long as it is pressed.

ENTER — Activates the selection on the display, for example a submenu, a control, a keypad key, or a setting. Also stores updated settings.

ESCAPE — If a setting is open for edit, this pushbutton closes the setting without saving. If an item is selected, this pushbutton deselects it. Otherwise this pushbutton activates the previous page in the page hierarchy.

RESET — Clears all latched LED indications and target messages. When a page with acknowledgeable/resettable items is displayed, it instead resets/acknowledges all items on that page, or if an item on that page is selected, it resets/acknowledges that item. If you reset/acknowledge alarms, they stop flashing but remain in the alarm state as long as that state remains. In other words, a red alarm does not switch off just because you acknowledged the alarm.

Home — Activates the home page, which is the root page. The page displays product information by default and is configurable.

Side pushbutton — Five pushbuttons on the left side of the display and five pushbuttons on the right side of the display. They perform various functions depending on the displayed page, such as switchgear controls. The display dynamically shows its label next to each side pushbutton when the pushbutton has an assigned function. These pushbuttons can also be programmed to function as user-programmable pushbuttons 9 and above.

Tab pushbutton — Five pushbuttons under the display. They navigate through the page hierarchy, and on some pages activate other actions. The display footer dynamically labels the page or action that is activated by the Tab pushbutton.

User-programmable pushbutton — Eight physical pushbuttons are associated with the first eight user-programmable pushbutton elements. Numbering is down, that is, 1 to 4 down the left column and 5 to 8 down the right column. These elements control a set of FlexLogic operands that can be used to initiate outputs or select modes. Each physical pushbutton has an integrated LED indicator that can be user-configured to display the appropriate status. These pushbuttons have clear covers behind which custom labels can be mounted. A utility is available to print the labels, under **File > Front Panel Report** in the software

5.3.3.11 LED INDICATORS

The graphical front panel has 14 LEDs.

- LEDs 1 to 3 are fixed status LEDs
- LED 4 is used for TRIP, but can be triggered by other operands
- LED is used for ALARM, but can be triggered by other operands
- LEDs 6 to 14 are programmable.

Status indicators

- IN SERVICE — Indicates that control power is applied, all monitored inputs/outputs and internal systems are fine, the relay's test mode is disabled, and the relay is in (online) Programmed mode (under ***Settings > Product Setup > Installation***)
- TROUBLE — Indicates that the relay has detected an internal problem. Check the self-test messages outlined at the end of the Commands and Targets chapter, and view the event records under ***Actual Values > Records***. For a beta / pre-release, this LED is always on.
- TEST MODE — Indicates that the relay is in Test Blocked (solid) or Test (flashing) mode. For information, see the Testing section in the Settings chapter.
- TRIP — Indicates that the selected FlexLogic operand serving as a trip input has operated. Set the operand under ***Settings > Product Setup > User-Programmable LEDs > Trip & Alarm LEDs***. This indicator latches; initiate the reset command to reset the latch.
- ALARM — Indicates that the selected FlexLogic operand serving as an alarm input has operated. Set the operand under ***Settings > Product Setup > User-Programmable LEDs > Trip & Alarm LEDs.***

Figure 120: Example of LEDs on graphical front panel

User-programmable event-cause indicators

Event-cause LEDs are below the status LEDs. They are turned on or off by protection elements that have their respective target setting selected as `Self-Reset` or `Latched`. If set to `Self-Reset`, then the corresponding event cause LED remains on as long as the operand associated with the element remains asserted. If set to `Latched` and asserted, then it remains on until the operand is reset and then a reset command initiated.

All elements that are able to discriminate faulted phases can independently turn on or off the phase A, B, or C LEDs. This includes phase instantaneous overcurrent, phase undervoltage, and so on. This means that the phase

A, B, and C operate operands for individual protection elements are ORed to turn on or off the phase A, B, or C LEDs.

The LEDs have defaults and can be configured to show instead the status of any FlexLogic operand.

The labeling area has a clear cover for custom labels. A utility is available to print stick-on labels, as outlined later in this chapter.

These LEDs are programmed by default as follows:

- PICKUP — LED 6 — Indicates that an element is picked up, and hence a trip can be imminent
- VOLTAGE — LED 7 — Indicates voltage was involved
- CURRENT — LED 8 — Indicates current was involved
- FREQUENCY — LED 9 — Indicates frequency was involved
- OTHER — LED 10 — Indicates a composite function that is not solely current, voltage, or frequency based (distance or power for example) or a control function (digital element or trip bus for example)
- PHASE A — LED 11 — Indicates phase A was involved
- PHASE B — LED 12 — Indicates phase B was involved
- PHASE C — LED 13 — Indicates phase C was involved
- NEUTRAL/GROUND — LED 14 — Indicates that neutral or ground was involved

5.3.3.12 LABELING

The relay includes software for labeling the LEDs and pushbuttons on the graphical front panel and a sticker sheet with preprinted and blank labels. The pre-printed labels are on the top-left of the template sheet, and the blank labels are on the bottom-right. Use the pre-printed labels, or use the designer provided in the software and print labels onto the template. One sheet is provided.

The example shows LED labeling, with pushbutton labeling below it (cut off).

To create LED and pushbutton labels for the front panel:

1. In the EnerVista software, in the Online or Offline Window area, access ***Settings > Front Panel Label Designer*** or **Front Panel Label Designer** (at the product root level). The designer window opens with pre-configured labels.
2. Under **File > Print Setup**, change the page orientation to Landscape.
3. In the label designer window, delete all labels not wanted for printing. This can be done by clicking the **Reset** button to clear all labels, or by selecting each unwanted label and deleting it. Otherwise, all labels displayed print on the template and use up the template. If you make a mistake, exit the window and open it again to view the default labels.
4. Based on the location on the template on which to print, create the labels by typing in the appropriate slots.

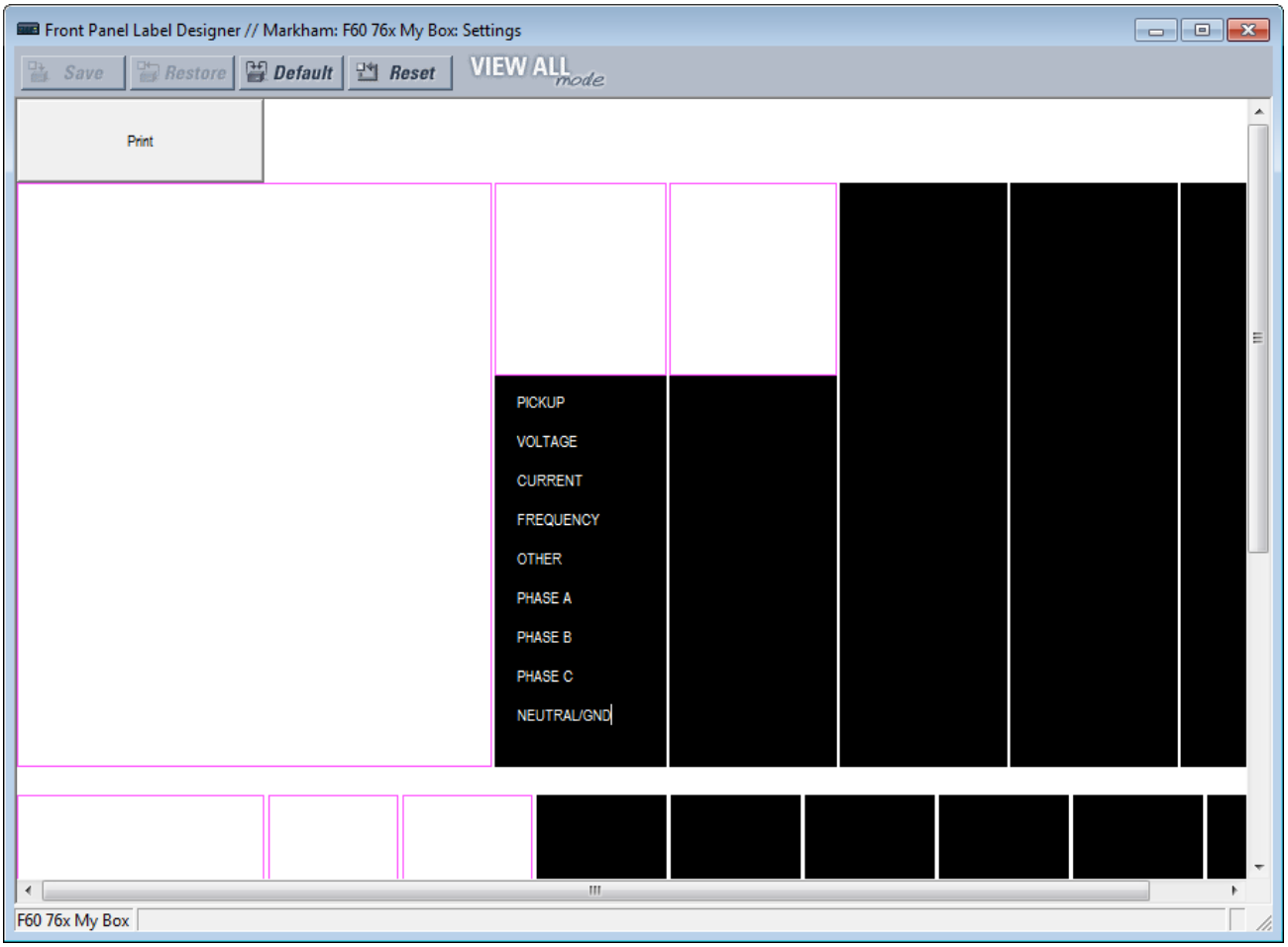

Figure 121: Front panel label designer for graphical front panel

5. Click the **Print** button in the window and select the printer.
6. Once printed, peel the labels off the template and stick them on the front panel. For the enhanced and graphical front panels, they go over the clear plastic inserts, not under. For the basic front panel, they go under or over the plastic covers.

Any changes are not saved. Each time that the label designer window opens, the original template displays. Any labels deleted are not lost.

5.3.3.13 MENU NAVIGATION

Press the MENU key to display selections or home page. Each press of the key advances through the following main headings:

- Actual Values
- Settings
- Commands
- Targets
- Factory Service
- User displays (when enabled)

Access the main menu by pressing the **Home** pushbutton, then the **Menu** Tab pushbutton.

Use the Up and Down arrow pushbuttons to select a submenu, then press the Right or ENTER pushbutton to drill into that submenu. The Left and ESCAPE pushbuttons back up the menu hierarchy.

The **Page Up** and **Page Down** Tab pushbuttons also navigate through the list. When there is only a single page of options, they jump to the first and last entries.

The options displayed depend on order code.

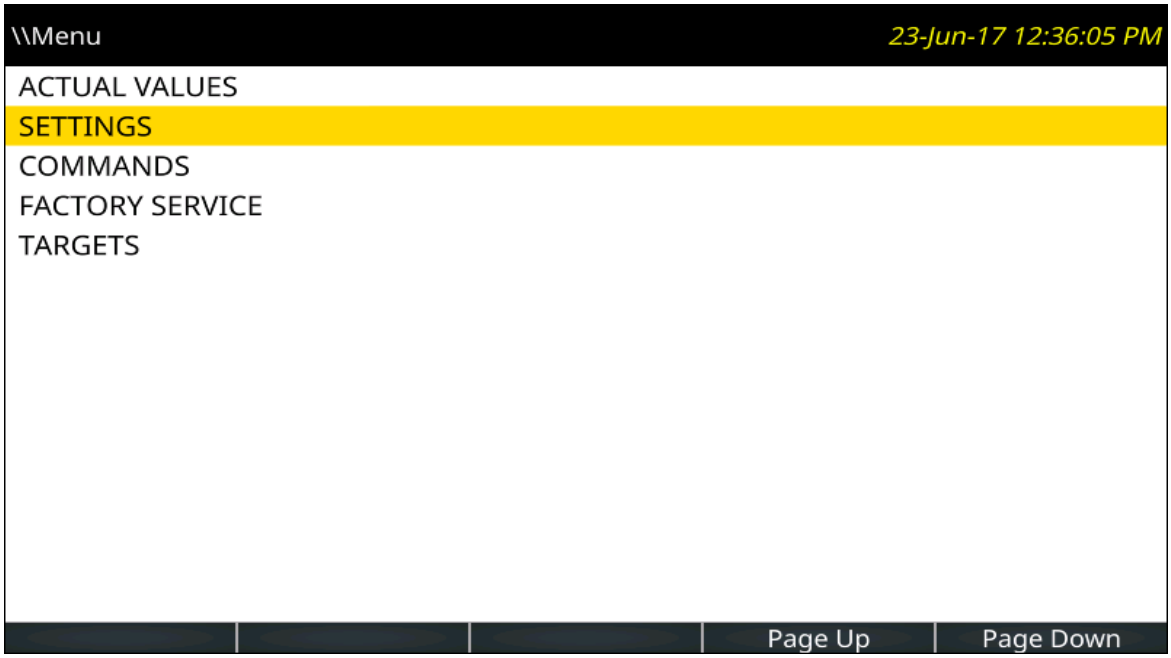

Figure 122: Main menu on graphical front panel

5.3.3.14 CHANGE SETTINGS

When enabling an element in the EnerVista software that outputs to an actual value, the actual values menu is not updated on the graphical front panel via Ethernet connection when that menu is active on the graphical front panel. Navigate out and back into the menu for activation.

Numerical data

This example outlines how to change the FLASH MESSAGE TIME setting. Flash messages are status, warning, error, and information messages displayed in response to certain key presses during settings programming. An example is a confirmation message upon saving settings. This setting specifies how long to display the message.

Press the **Menu** pushbutton to display the main menu.

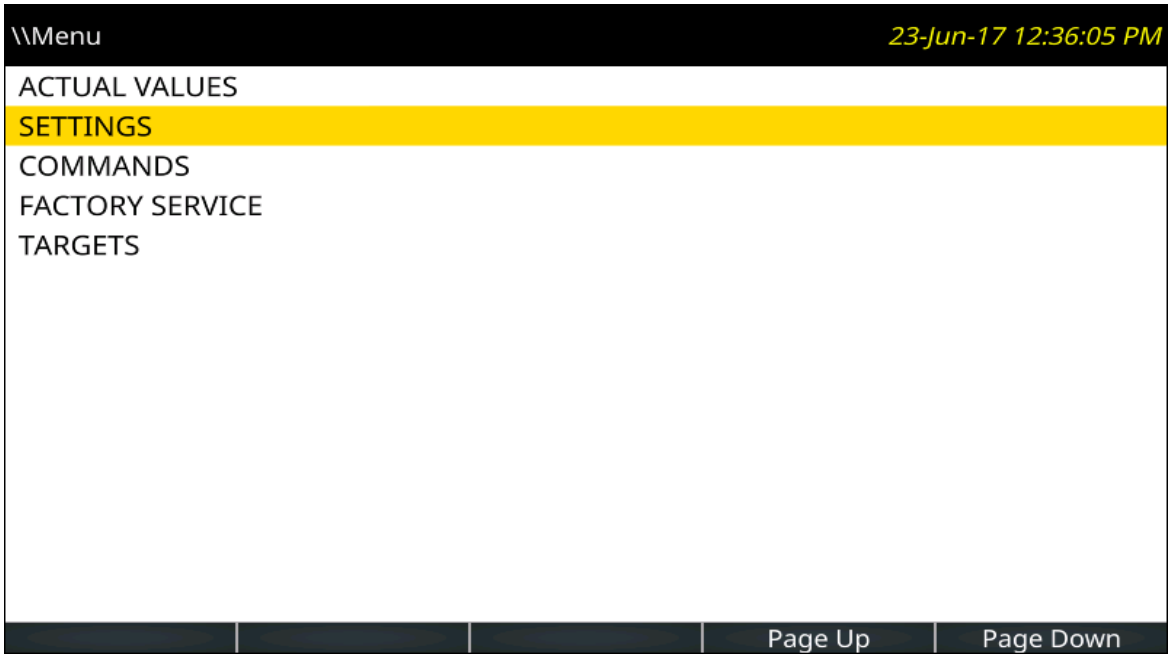

Figure 123: Main menu

Use the Up or Down pushbutton to select SETTINGS, then press the Right or ENTER pushbutton.

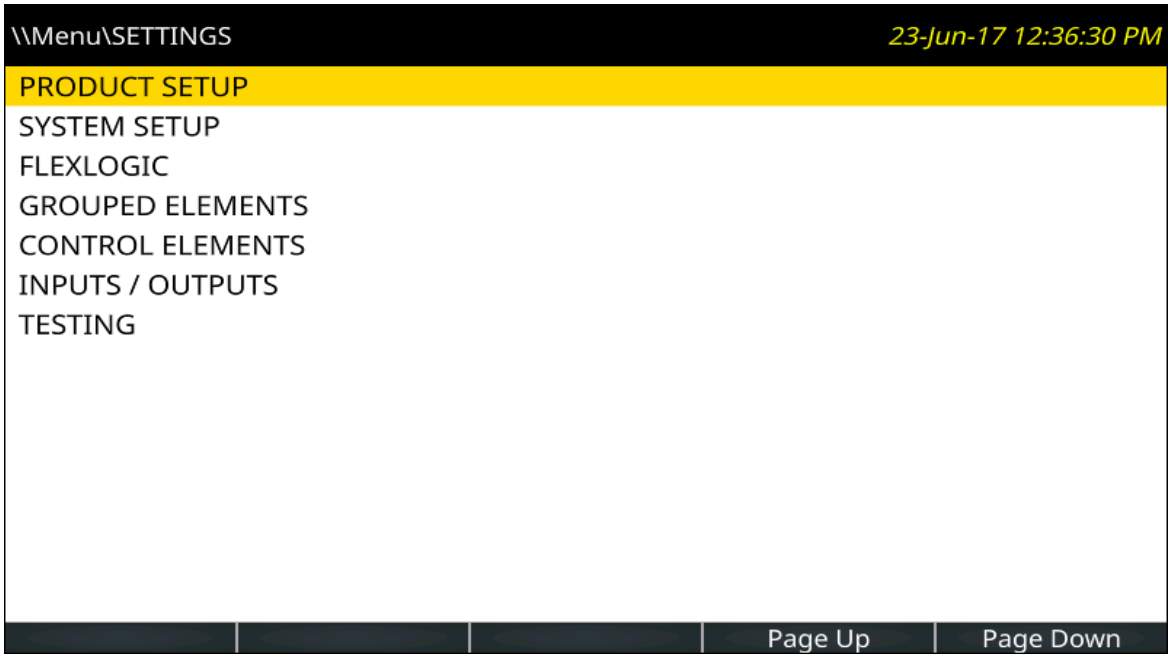

Figure 124: Settings menu

With PRODUCT SETUP selected, press the Right or ENTER pushbutton.

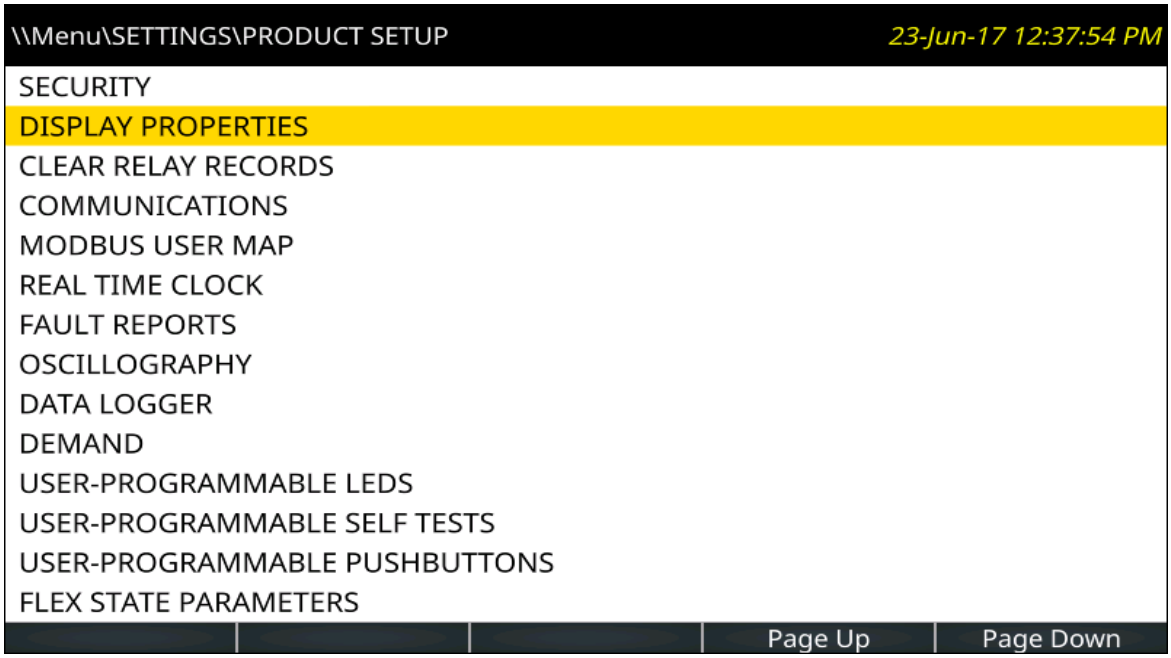

Figure 125: Product Setup menu

Use the Up or Down pushbutton to select DISPLAY PROPERTIES, then press the Right or ENTER pushbutton.

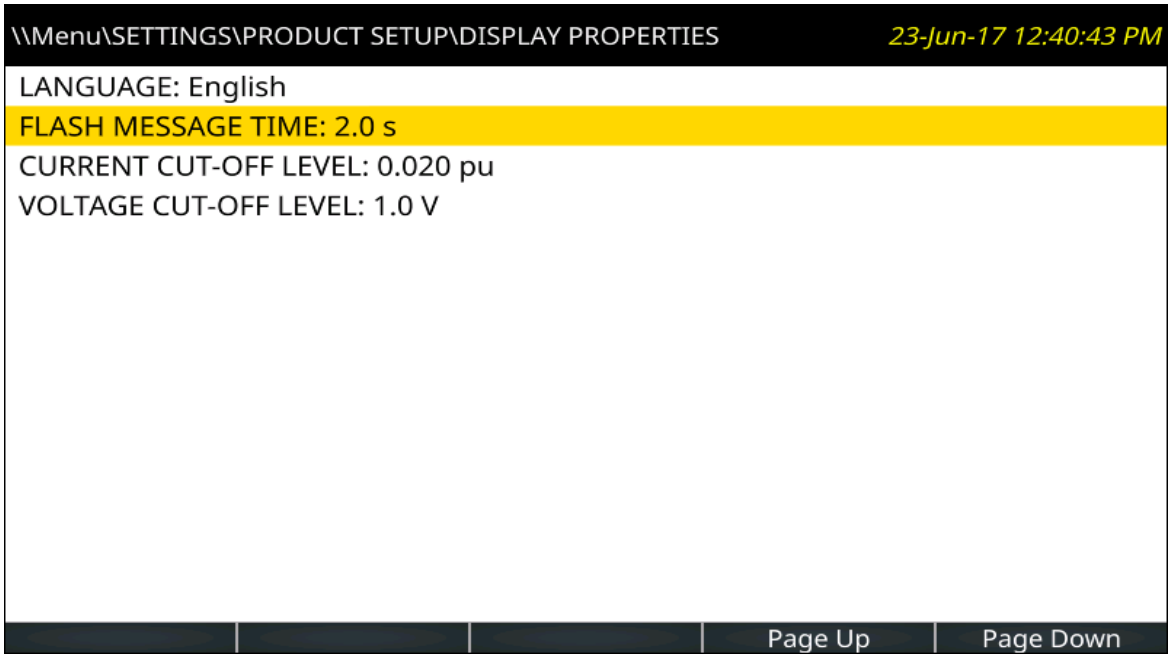

Figure 126: Display Properties menu

Use the Up or Down pushbutton to select FLASH MESSAGE TIME, then press the Right or ENTER pushbutton. If the relay is configured to require login to edit settings, and the user is not already logged in, the login page displays. When the user has successfully logged in, the setting is opened for edit. As the FLASH MESSAGE TIME setting accepts a numerical value, a keypad displays. The time is to be changed to 4.0 seconds.

The current setting displays. A flashing cursor line marks the insertion point, initially positioned after the last character of the setting. The setting range displays under the text.

Press the **<-- Move Cursor** and **Move Cursor -->** Tab pushbuttons to move the insertion point. Place it after the 2.

Press the Backspace Tab pushbutton to remove the character to the left of the cursor, in this case the 2.

Using the arrow keys, enter another time, for example 4 for four seconds. These Up, Down, Left, and Right pushbuttons move the keypad key selector. Pressing the ENTER pushbutton with the - key selected inverts the sign. Pressing the ENTER pushbutton with the decimal point selected enters that character at the insertion point. Push ENTER now to accept the 4.

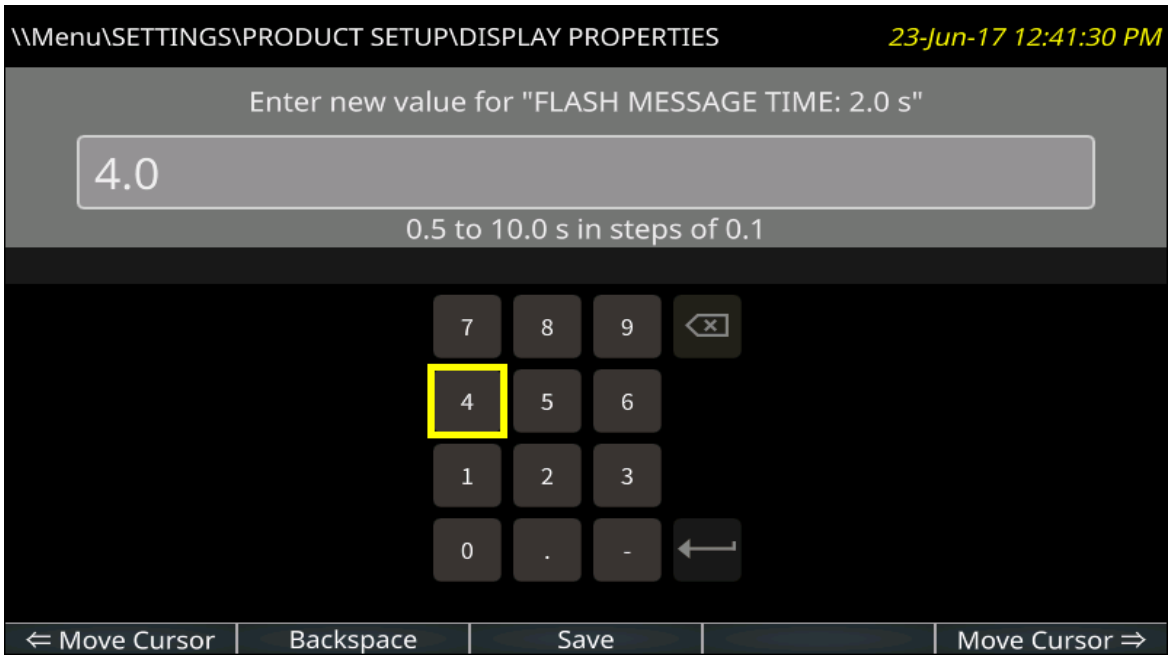

Figure 127: Settings page with numeric keypad

Press the **Save** Tab pushbutton, which does a range check on the value, saves the setting when valid, closes the page, and displays the previous page.

When a setting is not saved due to an invalid value, a message flashes, for example being out of range. In cases where the relay needs to be restarted for settings to take effect, the flash message advises.

Setting entry can be canceled without impact on the original value by pressing the ESCAPE or **Home** pushbutton.

Alphanumeric text

Settings that accept alphanumeric values display a keyboard. An example is a pushbutton name.

The **&123** key toggles between text and numbers.

The shift key (up arrow on keyboard) is green upon activation, while the keyboard letters switch to upper case. Double-click the shift key to lock capital lettering, or full capitals.

The globe key (shown greyed-out) toggles the keyboard language between English and another display language selected, for example between English and French. (The second language needs to be activated under **Settings > Product Setup > Display Properties.**)

For Japanese and Chinese, up to 10 characters can be input in a field, not 20.

To add accents, highlight a key and hold the ENTER pushbutton on the graphical front panel. Any special characters associated with the key display.

To avoid conflict with XML programming, do not enter the following characters on the Annunciator and Metering editor panels: " (quotation mark), ' (apostrophe), < (less than), > (greater than), & (ampersand). When used, the text following the character does not display or the Annunciator and Metering panels do not display on the graphical front panel.

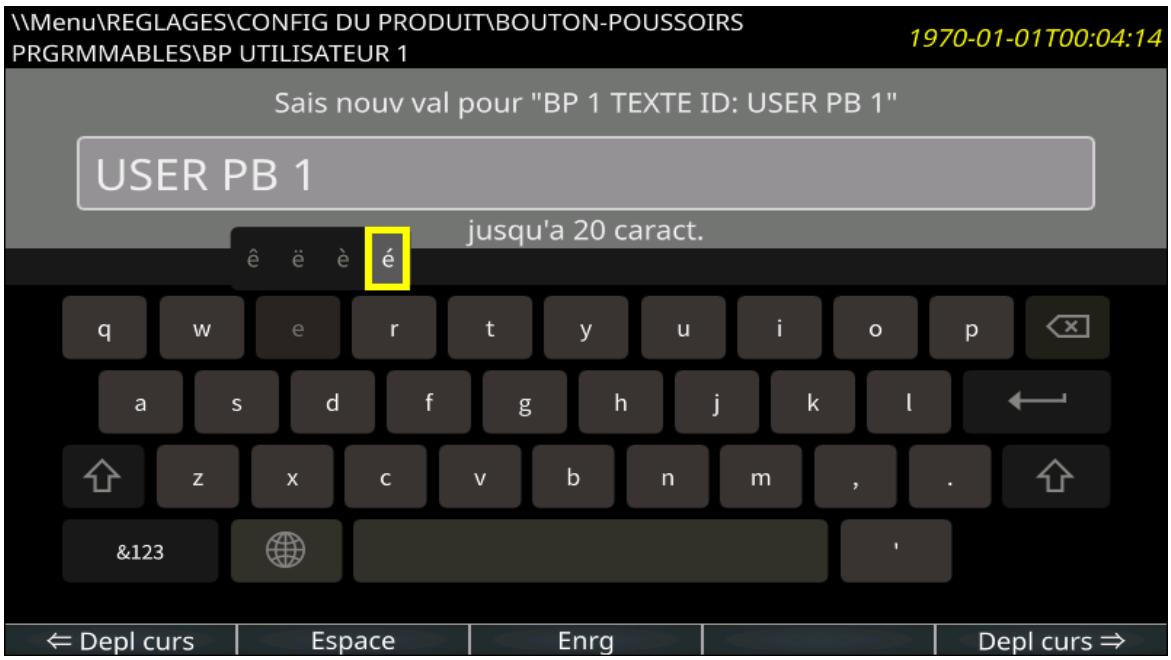

Figure 128: Settings page with keyboard and accents

5.3.3.15 VIEW ACTUAL VALUES

In addition to data viewable in the **Actual Values** menu on the front panel, phasor diagrams and metered data can be displayed. The metered data can be arranged as a table. The update rate of metered values is 500 ms.

A phasor page for each configured AC Source and up to five user-configurable metering pages can be displayed. The phasor pages are not configurable. Each phasor page shows a phasor plot and numerical values of all currents, voltages, and symmetrical components of a single AC source.

The Annunciator and Metering pages can be configured to display data. Each has a user-configured number of rows and columns. Each cell can include either configurable static text or the value of a selected FlexLogic operand, FlexAnalog operand, or actual value.

To display a metering page, press the **Home** pushbutton, then the **Metering** Tab pushbutton. The first metering page opens, with phasor pages listed before tabular pages. The Tab pushbuttons display any other metering page, as do the Up, Down, Left and Right pushbuttons. The current page is highlighted with a blue Tab pushbutton.

Each phasor page has a name, which consists of the value of the SOURCE NAME # setting appended with " Phasors." Phasor pages that have no configured CTs or VTs do not have a Tab pushbutton, and phasor pages that have no configured cells cannot be displayed.

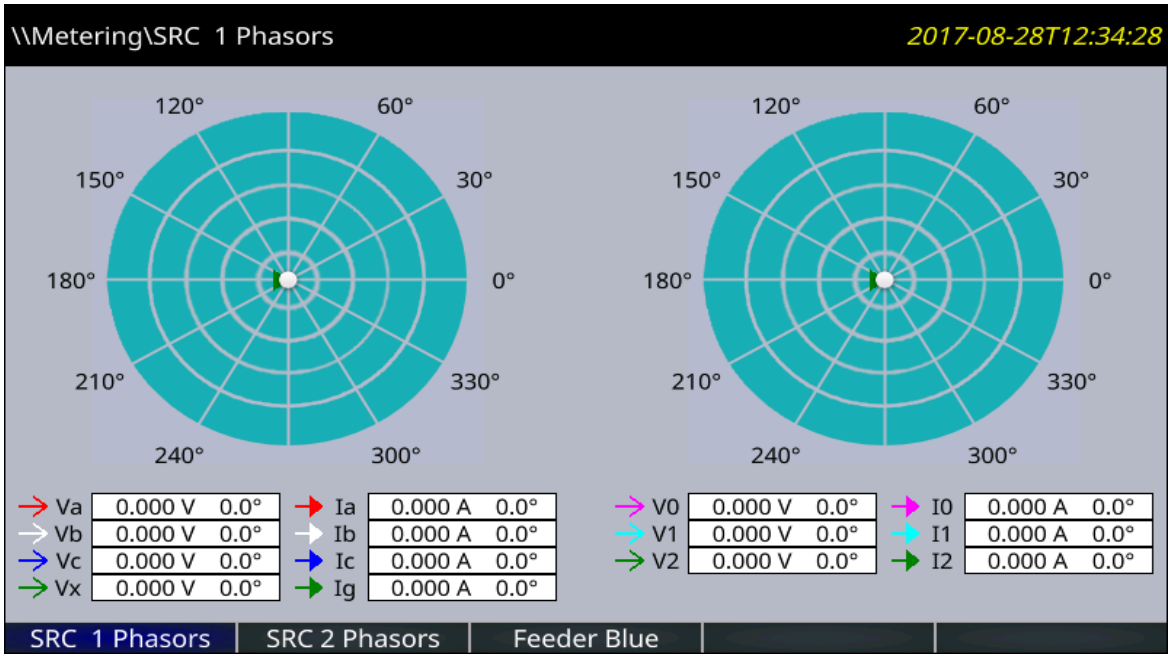

Figure 129: Phasor display

The configurable name displays in the header and Tab pushbutton label. Factory default names are Page 1, Page 2, and so on.

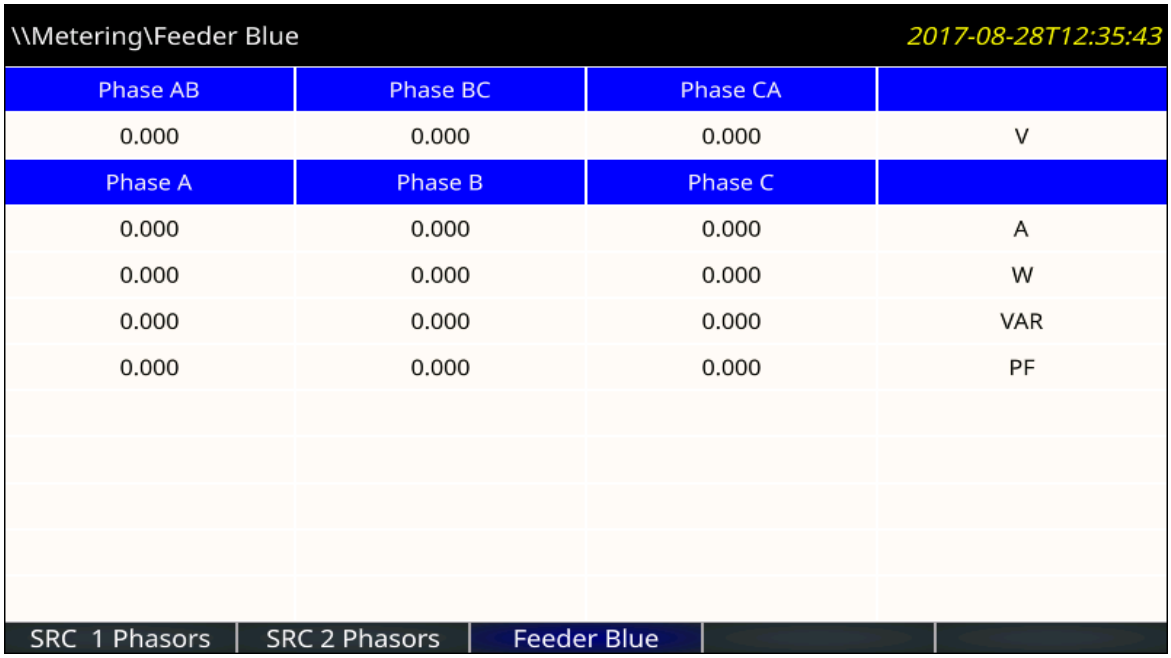

Figure 130: Metered actual values

The phasor sources are configured under **Settings > System Setup > Signal Sources**. The tables to display the actual values are configured in the software under ***Settings > Product Setup > Graphical Panel > Metering Editor***.

5.3.4 BREAKER CONTROL

The relay can interface with associated circuit breakers. In many cases the application monitors the state of the breaker, that can be presented on front panel LEDs, along with a breaker trouble indication. Breaker operations can be manually initiated from the front panel keypad or automatically initiated from a FlexLogic operand. A setting is provided to assign names to each breaker; this user-assigned name is for the display of related flash messages. These features are provided for two breakers; the user can use only those portions of the design relevant to a single breaker, which must be breaker 1. It is assumed in the following discussion that the ***SETTINGS > SYSTEM SETUP > BREAKERS > BREAKER 1(2) > BREAKER FUNCTION*** setting is enabled for each breaker.

5.3.4.1 CONTROL MODE SELECTION AND MONITORING

Installations can require that a breaker be operated in the three-pole only mode (3-pole), or in the one and three-pole (1-pole) mode, selected by setting. If the mode is selected as three-pole, a single input tracks the breaker open or closed position. If the mode is selected as one-pole, all three breaker pole states must be input to the relay. These inputs must be in agreement to indicate the position of the breaker.

For the following discussion it is assumed that the ***SETTINGS > SYSTEM SETUP > BREAKERS > BREAKER 1(2) > BREAKER 1(2) PUSH BUTTON CONTROL*** setting is enabled for each breaker.

5.3.4.2 CONTROL OF BREAKERS

After a correct command password, you are permitted 30 minutes in which to make any changes. After this 30 minute interval you cannot open or close a breaker via the keypad. The following instructions begin from the not-permitted state.

Control of two breakers

For the following setup example, the **Name** field represents the user-programmed variable name.

For this example, the relay is connected and programmed for both breaker 1 and breaker 2. The **USER 1** key performs the selection of which breaker is to be operated by the **USER 2** and **USER 3** keys. The **USER 2** key manually closes the breaker, and the **USER 3** key manually opens the breaker.

ENTER COMMAND PASSWORD	This message appears when the **USER 1**, **USER 2**, or **USER 3** key is pressed and a **COMMAND PASSWORD** is required, that is, if **COMMAND PASSWORD** is enabled and no commands have been issued within the last 30 minutes
PRESS USER 1 To select breaker	This message appears if the correct password is entered or if none is required. This message displays for 30 seconds or until the **USER 1** key is pressed again.
BKR1-(Name) SELECTED USER 2=CLS / USER 3=OP	This message displays after the **USER 1** key is pressed for the second time. Three possible actions can be performed from this state within 30 seconds as per the following items (1), (2) and (3).
(1)	
USER 2 OFF / ON To close BKR1-(Name)	If the **USER 2** key is pressed, this message appears for 20 seconds. If the **USER 2** key is pressed again within that time, a signal is created that can be programmed to operate an output relay to close breaker 1.
(2)	
USER 3 OFF / ON To open BKR-1(Name)	If the **USER 3** key is pressed, this message appears for 20 seconds. If the **USER 3** key is pressed again within that time, a signal is created that can be programmed to operate an output relay to open breaker 1.
(3)	

BKR2-(Name) SELECTED USER 2=CLS / USER 3=OP	If the **USER 1** key is pressed at this step, this message appears showing that a different breaker is selected. Three possible actions can be performed from this state as per (1), (2) and (3). . Repeatedly pressing the **USER 1** key alternates between available breakers. Pressing keys other than **USER 1, 2**, or **3** at any time cancels the breaker control function

Control of one breaker

For this application, the relay is connected and programmed for breaker 1 only. Operation for this application is identical to that described in the previous section for two breakers.

5.3.5 PASSWORD CONTROL

The relay supports password entry from a local or remote connection. Local access is defined as access to settings or commands via the front panel. This includes both keypad entry and the RS232 port. Remote access is defined as access to settings or commands via any rear communications port. This includes both Ethernet and RS485 connections.

When entering a settings or command password via EnerVista or any serial interface, you must enter the corresponding connection password. If the connection is to the back of the relay, the remote password must be used. If the connection is to the RS232 port of the front panel, the local password must be used.

There are two user security access levels; 'setting' and 'command', for which you can set a password for each. Use of a password for each level controls whether you can enter commands or change settings. Another option is to specify setting and/or command access for individual user accounts.

Setting

This allows you to make any changes to any of the setting values:

- Changing any setting
- Test mode operation

Command

This restricts you from making any settings changes, but allows you to perform the following operations:

- Operating the breakers via front panel keypad
- Changing the state of virtual inputs
- Clearing the event records
- Clearing the oscillography records
- Clearing fault reports
- Changing the date and time
- Clearing the breaker arcing current
- Clearing energy records
- Clearing the data logger
- Clearing the user-programmable pushbutton states

To enter the initial setting or command password:

1. Press the MENU key until the SETTINGS header flashes momentarily and the PRODUCT SETUP message appears on the display.
2. Press the MESSAGE right arrow until the ACCESS LEVEL message appears on the display.
3. Press the MESSAGE down arrow until the CHANGE LOCAL PASSWORDS message appears on the display.
4. Press the MESSAGE right arrow until the CHANGE SETTING PASSWORD or CHANGE COMMAND PASSWORD message appears on the display.

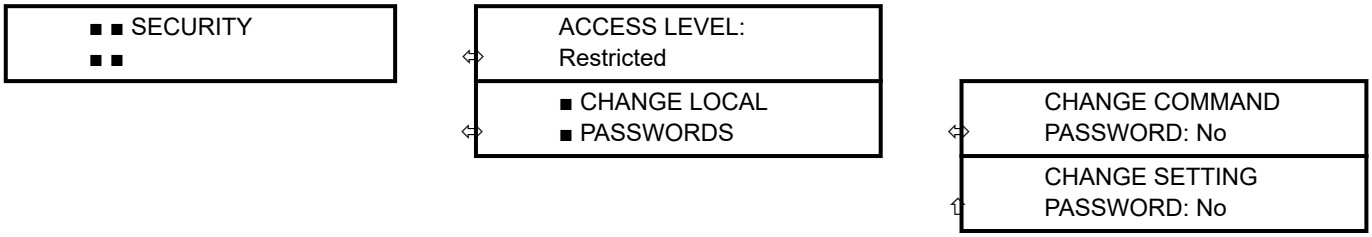

5. After the CHANGE...PASSWORD message appears on the display, press the VALUE up or down arrow to change the selection to “Yes.”
6. Press the ENTER key and the display prompts you to ENTER NEW PASSWORD.
7. Type in a password and press the ENTER key.
8. When VERIFY NEW PASSWORD displays, re-type the password and press ENTER

9. When the NEW PASSWORD HAS BEEN STORED message appears, your new Setting (or Command) password is active.

5.3.5.1 RESETTING THE PASSWORD IN A DEVICE WITHOUT CYBERSENTRY

EnerVista UR Setup

1. In **Settings > Product Setup**, click the CHANGE button for the Command Password or Setting Password.
2. The pop-up states `Password Status: Set`, confirming that the user has previously set a password. Type `ChangeMe1#` in both the **New Password** and **Confirm Password** fields, and press **OK**.
3. If the device has not been logged into using the previously set password, a prompt will request that the previous password should be entered. Do this and press **OK**.
4. A message will appear confirming that this was a valid password - click **OK**.
5. A pop-up will now appear confirming `Password Status: Default` (i.e. the password is reset to the default `ChangeMe1#` and prompting for the new password. Type the new password, confirm it in the next field, then click **OK**.

Front panel

1. Press the MENU key until the SETTINGS header flashes momentarily and the PRODUCT SETUP message appears on the display.
2. Press the MESSAGE right arrow until the ACCESS LEVEL message appears on the display.
3. Press the MESSAGE down arrow until the CHANGE LOCAL PASSWORDS message appears on the display.
4. Press the MESSAGE right arrow until the CHANGE SETTING PASSWORD or CHANGE COMMAND PASSWORD message appears on the display.
5. After the CHANGE...PASSWORD message appears on the display, press the VALUE up or down arrow to change the selection to “Yes”.
6. Type “ChangeMe1#” and press the ENTER key. This will clear the current password and make `ChangeMe1#` the password.
7. The display will prompt you to ENTER CURRENT PASSWORD. Type in a new password and press the ENTER key.

5.3.5.2 INVALID PASSWORD ENTRY

By default, when an incorrect Command or Setting password has been entered via the front panel three times within five minutes, the LOCAL ACCESS DENIED FlexLogic operand is set to **On** and the relay does not allow settings or command level access via the front panel for five minutes.

By default, when an incorrect Command or Setting password has been entered via any external communications interface three times within five minutes, the REMOTE ACCESS DENIED FlexLogic operand is set to **On** and the relay does not allow settings or command access via the any external communications interface for five minutes. The REMOTE ACCESS DENIED FlexLogic operand is set to **Off** after five minutes for a Command password or 30 minutes for a Settings password.

These default settings can be changed in EnerVista under **Settings > Product Setup > Security**.

5.4 LOGIC DIAGRAMS

Logic diagrams in this instruction manual provide an overview of function and settings. A logic diagram is based on

- Inputs-on the left side, which are setting and operands
- Logical gates, which is Boolean algebra to combine logical lines using AND, OR, NOT, and other gates to get a new logical state
- Logical operators, which are timers, one-shot operations, latches, and so on
- Outputs-on the right side, which are products of the manipulations with inputs, logical gates, and logical operators to produce new operands and define the output state of the element

True and false values are denoted by 1 and 0 respectively. A function usually is high/on/enabled when 1.

Reading from right to left in the following diagram, the TRIP BUS 1 OP and TRIP BUS 1 PKP FlexLogic operands on the right side are triggered when either the settings or reset latch in the middle of the diagram is triggered. When this applies, the TRIP BUS 1 OP operand is triggered after the delay set by the ***TRIP BUS 1 PICKUP DELAY*** or ***TRIP BUS 1 RESET DELAY*** setting, while the TRIP BUS 1 PKP operand initiates immediately. The settings or reset latch in the middle of the diagram is triggered as follows.

- For the reset, one of three conditions are required to meet the OR requirement shown at the bottom left. That is, the ***TRIP BUS 1 LATCHING*** setting must be 0=Disabled (which is negated by the NOT function to become 1=Enabled), output from the TRIP BUS 1 RESET FlexLogic operand must be 1, or output from the RESET OP FlexLogic operand must be 1.
- For the settings, one of 16 input conditions at the top left must be met for the OR, the ***TRIP BUS 1 FUNCTION*** must be Enabled, and the TRIP BUS 1 BLOCK output must output as 0, which is then negated/reversed by NOT to become 1.

Logic diagram symbols

Symbol	Description
= Off	Output from FlexLogic operand, so user-defined
= Enabled	1 = Enabled and 0 = Disabled
OR	Any function input on the left side satisfies the condition
AND	All functions input on the left side are required to satisfy the condition
O	Not. Negates/reverses the output, for example 0 becomes 1.
●	Connection
S, R	Set, Reset
T_{PKP}	Timer pickup. Triggered by the settings latch in the diagram
T_{RST}	Timer reset. Triggered by the reset latch in the diagram.

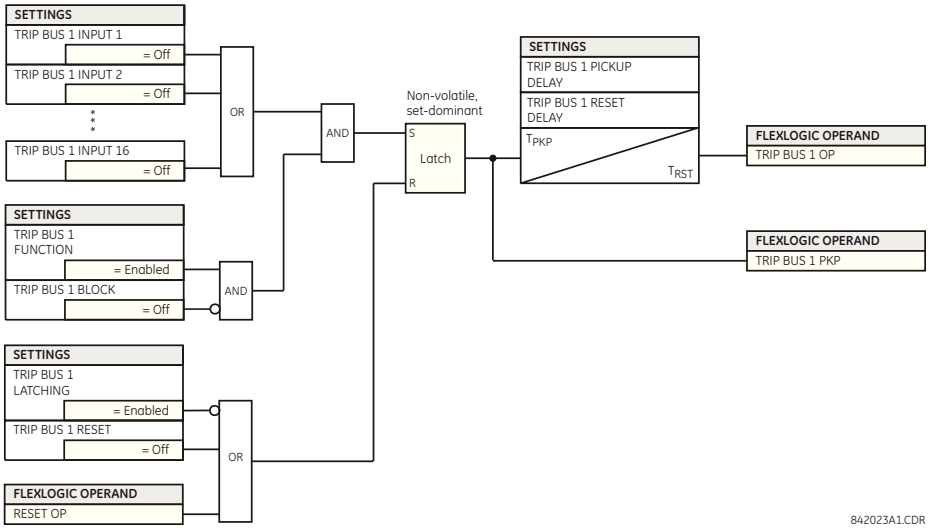

Figure 131: Logic diagram

5.5 FLEXLOGIC

5.5.1 FLEXLOGIC DESIGN USING ENGINEER

The IED internally uses the FlexLogic equations. EnerVista Engineer provides a graphical way to design the logic. When the user presses “compile” in Logic Designer, the software converts the graphical logic into equations and updates the FlexLogic Equations.

There are two ways to create, edit and maintain the FlexLogic equations:

- Using the FlexLogic Equation Editor available at **FlexLogic > FlexLogic Equation Editor**
- Using the Logic Designer available at **Engineer > Logic Designer**

Note:
EnerVista Engineer is only available through the offline window of the EnerVista UR Setup. FlexLogic Equation Editor and Logic Designer are designed to be mutually exclusive as using them interchangeably to create, edit and maintain the FlexLogic equations may cause inconsistencies in the resulting equations. We recommend using only one of the two methods throughout the process.

Parts of EnerVista Viewpoint Engineer software are integrated in the EnerVista UR Setup software. Engineer can be used to create and modify FlexLogic that is used by a device, such as to monitor output, monitor triggers, and create self-tests.

Features include:

- Automatically displays existing FlexLogic
- Drag-and-drop interface
- Open multiple tabs and edit simultaneously
- Display symbols in IEC, ISO, or UR formats
- Export a diagram as BMP file or copy it to the clipboard for import into other applications
- Scale and print files in various paper sizes
- Works with all UR firmware versions

The figure shows an example where several inputs are used to trigger an output. With the OR function, any one of the inputs can trigger the output.

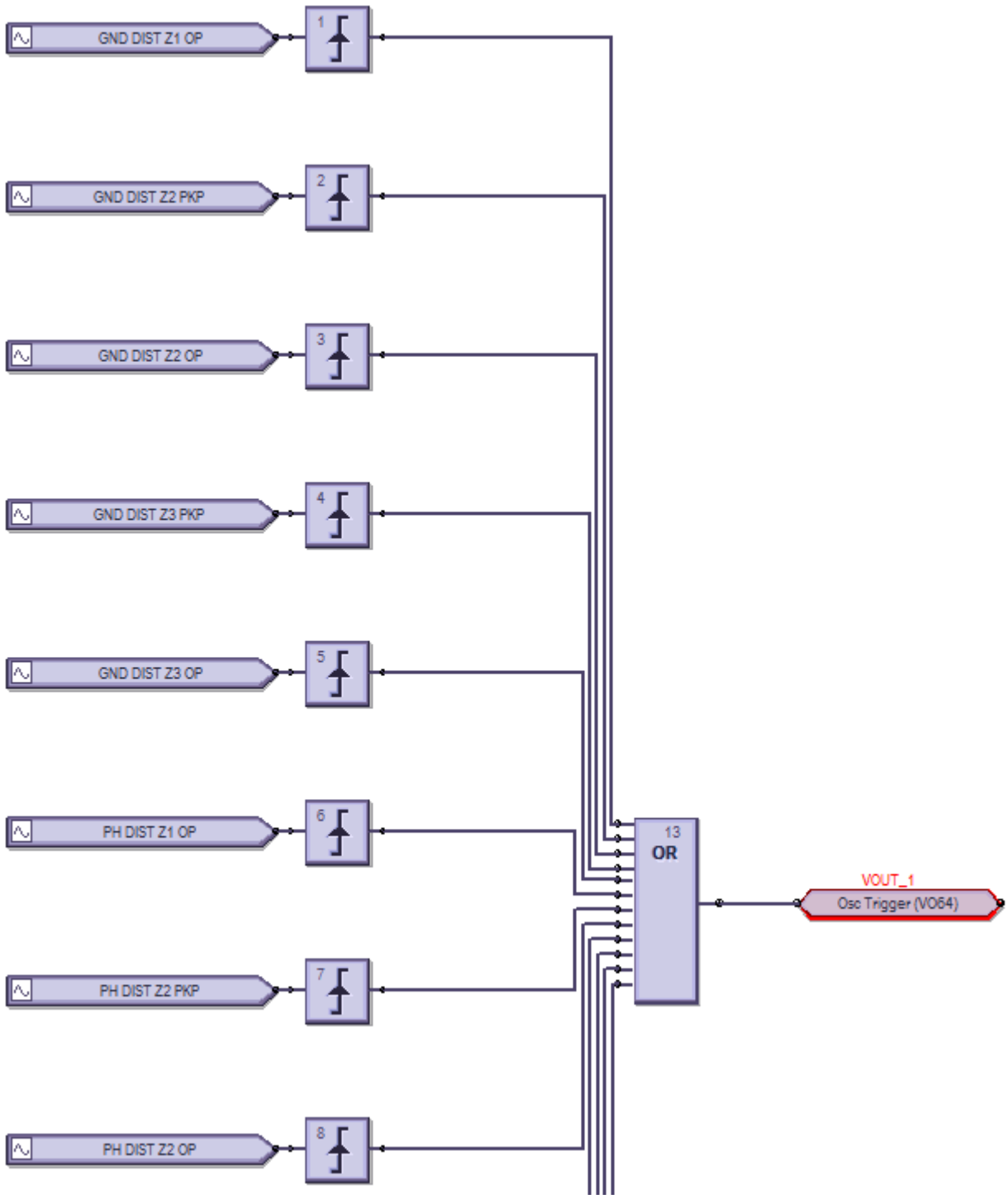

Figure 132: Inputs triggering output in Engineer

The process is as follows:

- Modify or create a logic diagram in the Offline Window area of the EnerVista UR Setup software
- Compile it and troubleshoot any errors
- The logic populates automatically into the FlexLogic Equation Editor
- Upload the file to the live device
- Monitor the output

This section explains how to use Engineer. It outlines the following topics:

- Design logic
- Send file to and from device
- Monitor logic
- View front panel
- Generate connectivity report
- Preferences
- Toolbars

5.5.2 DESIGN LOGIC

FlexLogic can be created with a block diagram. Note that although work is completed in the Offline Window area of the software, communication occurs with the online device, for example when switching to monitoring mode.

The following procedures are outlined:

- Examples
- Add existing FlexLogic equations
- Create a logic diagram/sheet
- Rapidly add logic blocks in sequence
- Connect two logic diagrams/sheets
- Optimize the logic
- Change logic order
- Search logic
- Exclude sheet from compile

5.5.2.1 EXAMPLES

The symbols are displayed in the UR format.

Create oscillography trigger every three minutes

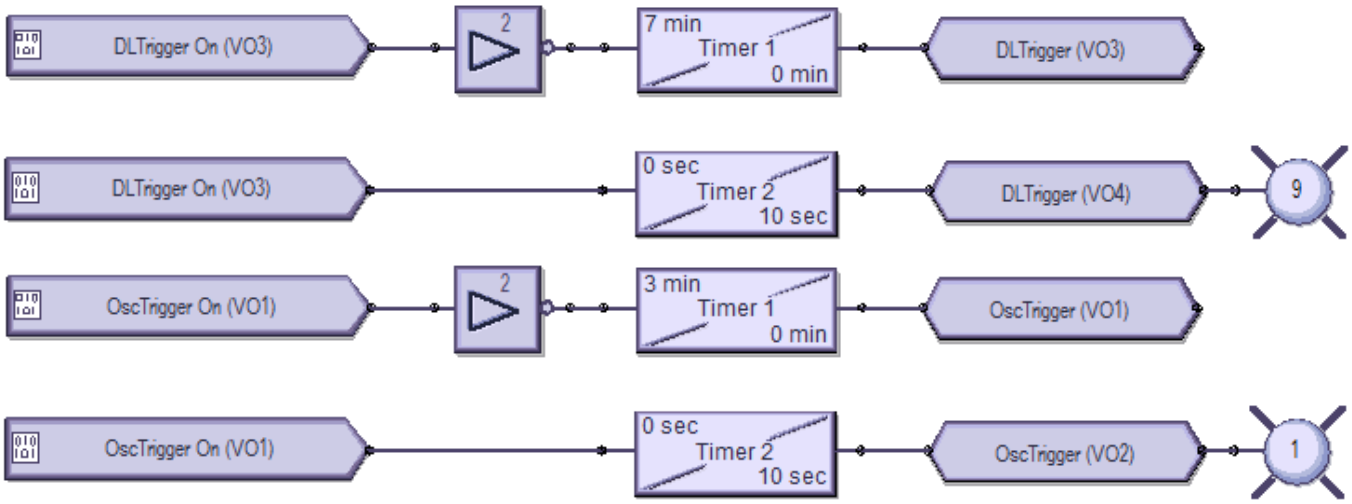

Figure 133: Three-minute timer turns on LED for 10 seconds

Preparation — Under **Settings > Inputs/Outputs > Virtual Outputs**, the first and second virtual outputs are named `OscTrigger`

Top logic — Three-minute timer trigger

Bottom logic — Turn on LED 1 for 10 seconds when the trigger starts

Create data logger trigger every seven minutes

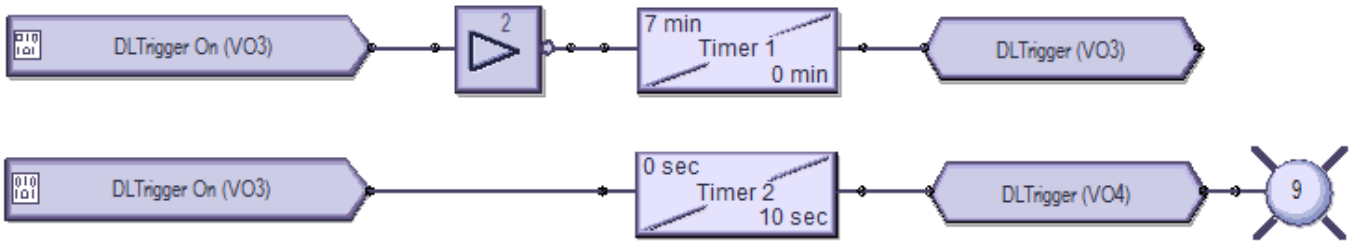

Figure 134: Seven-minute timer turns on LED for 10 seconds

Preparation — Under **Settings > Inputs/Outputs > Virtual Outputs**, virtual outputs 3 and 4 are named *DLTrigger*

Top logic — Seven-minute timer trigger

Bottom logic — Turn on LED 9 for 10 seconds when the trigger starts

Create events every minute, then every 100 ms

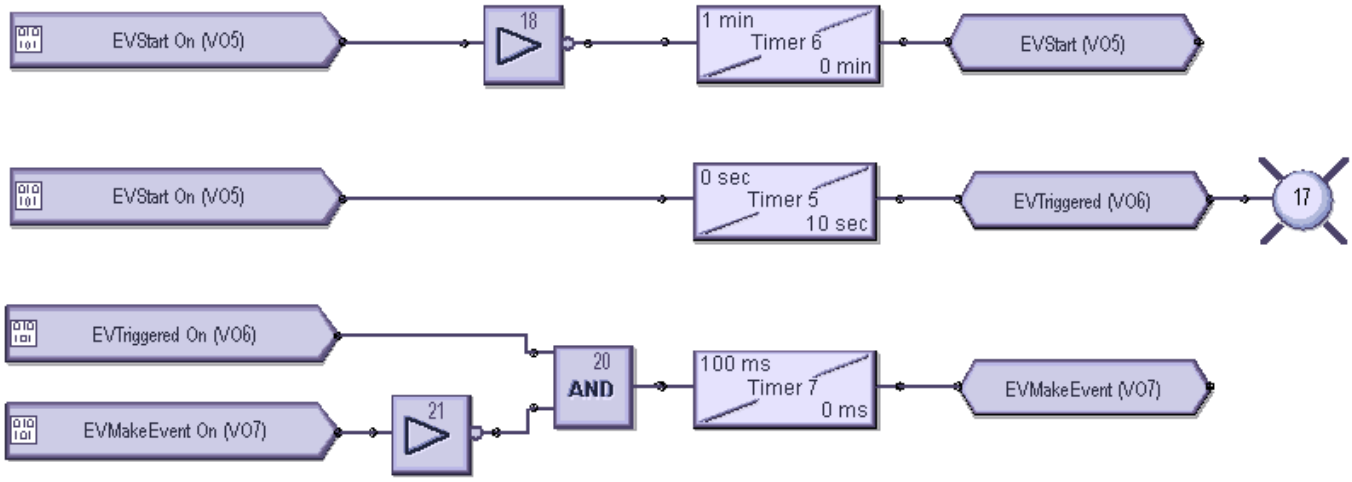

Figure 135: One-minute timer turns on LED and creates events every 100 ms

Preparation — Under **Settings > Inputs/Outputs > Virtual Outputs**, virtual output 5 is named *EVStart*, 6 is named *EVTriggered*, and 7 is named *EVMakeEvent*

Top logic — One-minute timer trigger

Middle logic — Turn on LED 17 for 10 seconds when trigger starts

Bottom logic — Create events at 100 ms intervals for the same 10 second period

5.5.2.2 ADD EXISTING FLEXLOGIC EQUATIONS

A logic diagram can be created using existing FlexLogic equations (this section) or by creating new ones (next section).

> *Note:*
> *FlexLogic Equation Editor and Logic Designer are designed to be mutually exclusive as using them interchangeably to create, edit and maintain the FlexLogic equations may cause inconsistencies in the resulting equations. We recommend using only one of the two methods throughout the process.*

To create a logic diagram using existing FlexLogic equations:

- In the Offline Window area, modify the FlexLogic for the device under **FlexLogic > FlexLogic Equation Editor**. If the device is not listed, right-click the device in the Online Window area and select the **Add Device to Offline Window** option. Upon saving the modified FlexLogic, a yellow icon appears for the device in the Offline Window area to indicate that the logic differs from the Online device.
- In the Offline Window area, access **Engineer** for the device, then **Logic Designer**. The logic opens.
- Click the **Edit > Auto Populate Workbook** menu item. If the software prompts if you want to keep or discard existing sheets, either is acceptable, with the older excluded sheeted being denoted by brackets, such as < Sheet 1 >. The logic displays in the various tabs. The FlexLogic created in the equation editor appears in Sheet 1, for example.

5.5.2.3 CREATE LOGIC DIAGRAM

Upon access of the Logic Designer, the FlexLogic equations of the device display. You can create new logic in new sheets or modify the ones that display.

This procedure uses input / output logic as an example.

1. In the Offline Window area, access **Engineer** for the device, then **Logic Designer.** If the device is not listed, right-click the device in the Online Window area and select the **Add Device to Offline Window** option.

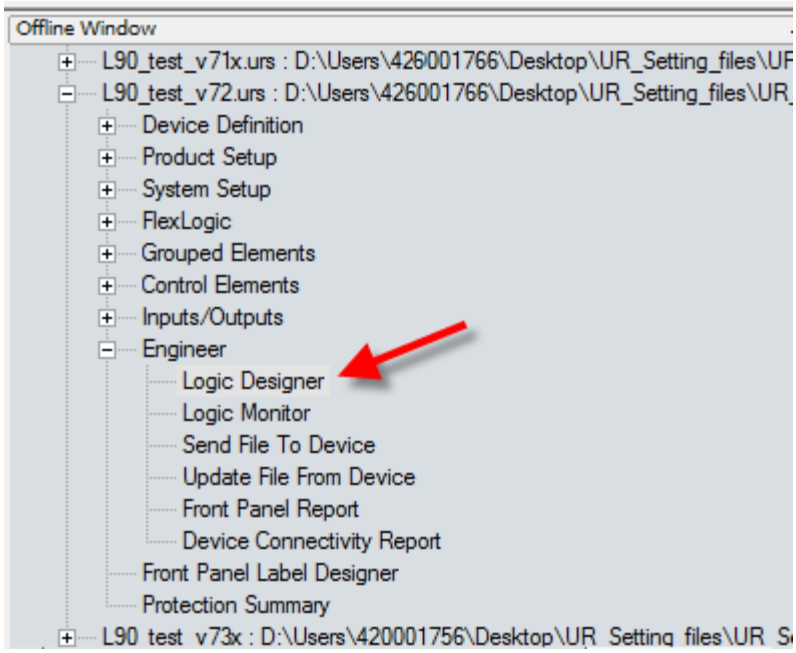

Figure 136: Access Engineer in the Offline Window area

A default block diagram opens that shows 48 inputs (boxes) and 48 user-programmable LEDs (circles).

For the graphical front panel, no LEDs can be added to the window and the LEDs are removed when opening any existing files. For these existing files with the LEDs removed, save the file without them.

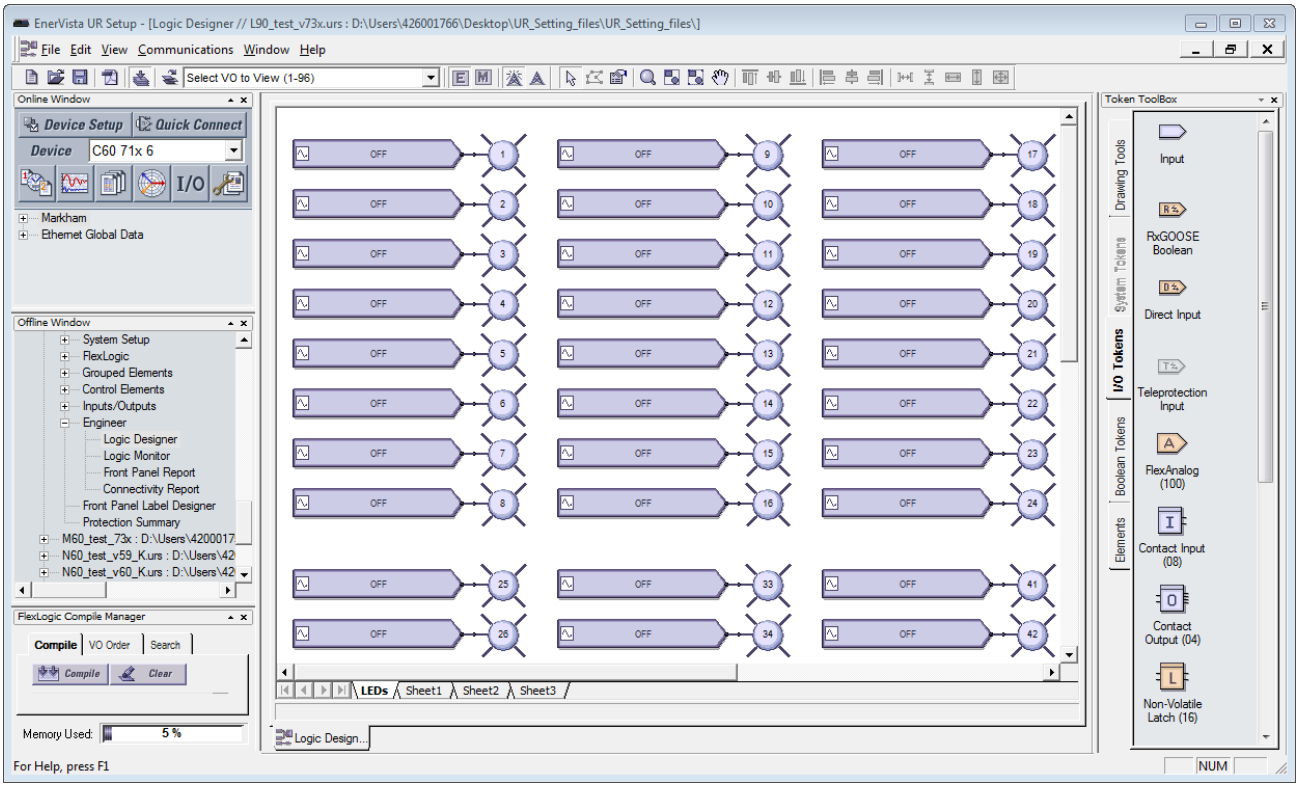

Figure 137: Default view of FlexLogic designer

2. Optionally delete the default logic diagram by right-clicking its tab at the bottom of the window and selecting **Delete**.
3. To add a blank sheet, click **Edit > Add Sheet**. A new tab displays. Or use the last tab displayed, which is a blank sheet.
4. Optionally right-click the new tab and rename it.
5. Add the input blocks to the logic diagram. For example, click the **I/O Tokens** tab on the right, click the **Input** element, then click in the logic sheet to add it. Or drag-and-drop it.
6. Double-click the block on the sheet to configure it, selecting from the two drop-down lists. The figure shows that virtual input 61 is being added. The **View Associated Screen** button opens its settings window.

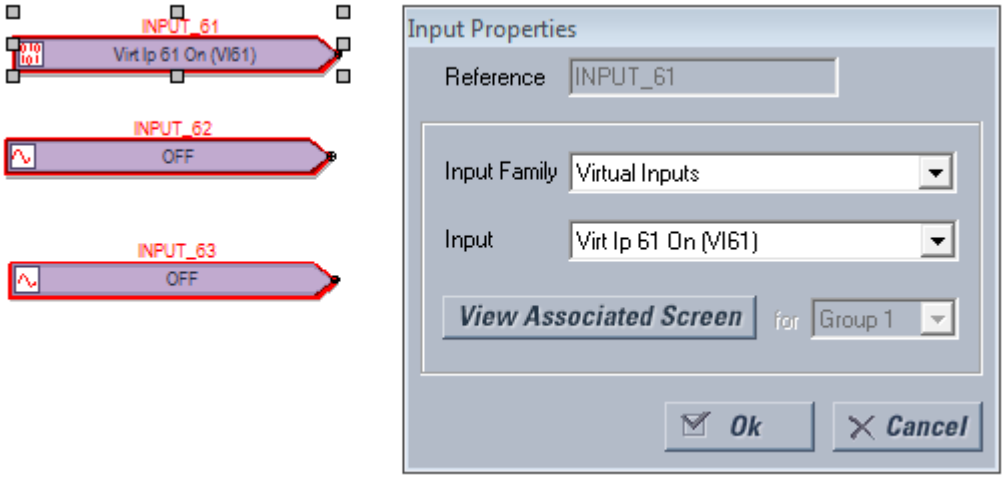

Figure 138: Configuring an input block

7. Add the output blocks to the logic diagram. For example, click the **I/O Tokens** tab, click the **Virtual Output** element, then click in the logic sheet to add it. Double-click the block on the sheet to configure it. For the name, make it unique. The figure shows virtual output 61 is being added, with a suffix of "io" added to the name to make it unique. Note that the outline color of a block is red until it is configured, and that this properties window varies by block and the selectable options by order code.

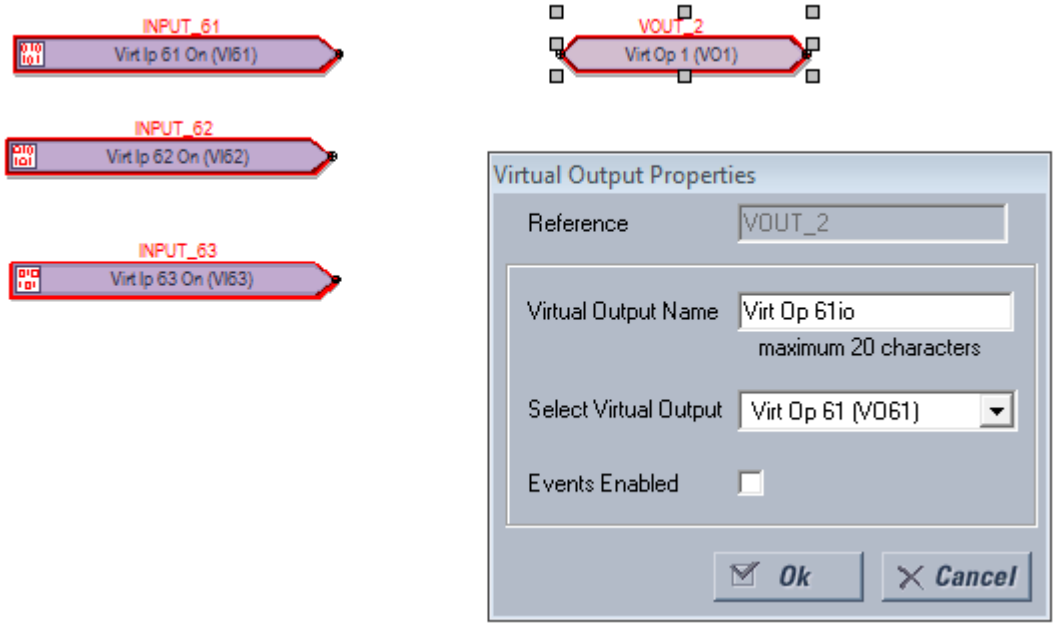

Figure 139: Configuring an output block

8. Connect the input blocks to the output blocks by drawing a line as follows. Click at the end of one block and drag the line to the next block. Or click the Drawing Tools tab, then select the **Line** option. The cursor needs to be at the connection point to end the line, not elsewhere on the block. Note that the outline color is no longer red on the blocks.

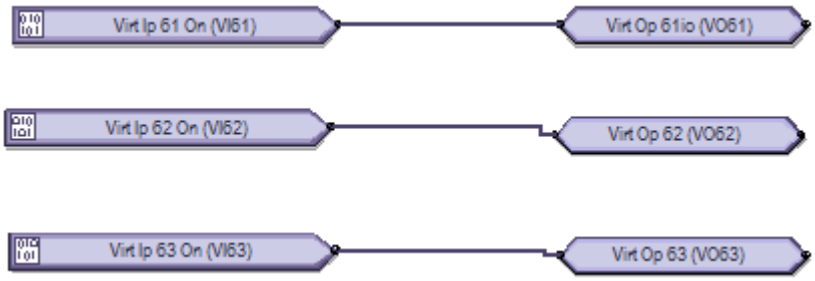

Figure 140: Completed inputs and outputs

9. Add any remaining blocks or information. Right-click a block to copy and paste it. Notes are as follows.

   Add a text box — **Drawing Tools > Text**

   Add a FlexElement — **Elements > FlexElement**. An analog input is expected where a small arrow head shows in the box.

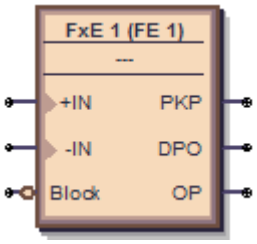

Figure 141: FlexElement accepts analog inputs on left side where arrow heads display

Add an Element — **Elements** tab. Available elements reflect the product, for example the Control Elements category.

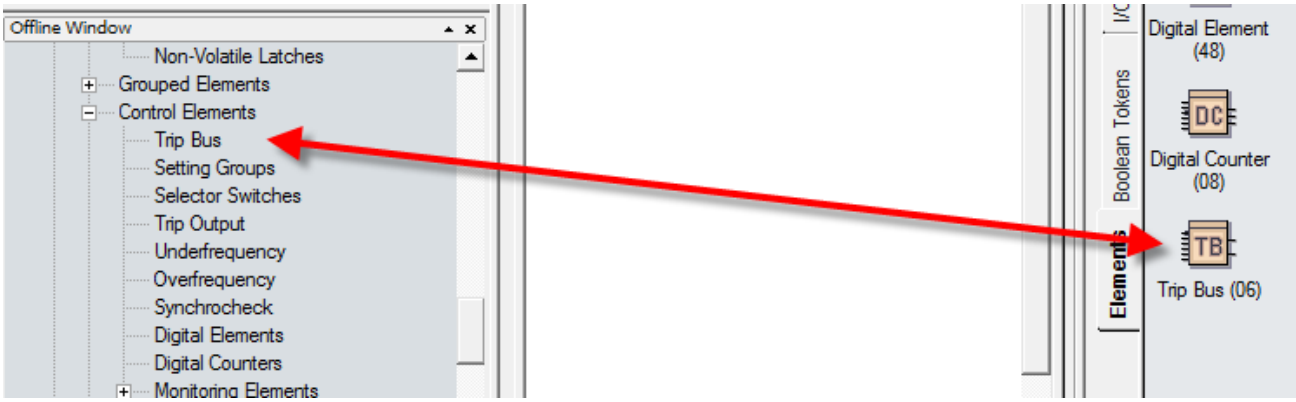

Figure 142: Elements reflect Control Elements

10. Check for any blocks that have a red outline. These are invalid. Fix them before continuing, for example by configuring them.
11. Compile the logic diagram to check for errors by clicking the **Compile** button at the bottom left or by pressing the F7 key.

    If prompted about a message about sorting, click **Yes** to apply the default (for this example), which can be automatic sorting based on an algorithm that applies fastest execution time.

    With successful compiling, the file is saved and the FlexLogic equations populate automatically. Scroll up through the compile messages, with the red errors being the only messages that require fixing before proceeding.

    The figure shows that we forgot to add the "Io" suffix to the names of virtual outputs 62 and 63, as indicated by `Warning: Virtual output xx using default name`. This warning is a minor warning.

    The warning `input using disabled feature` means that input needs to be enabled. Double-click the block, click the **View Associated Screen** button, enable the setting, save, and recompile.

    The output and messages are explained in the next section.

    Some information displayed in the compile messages updates automatically, for example messages after a device is unplugged.

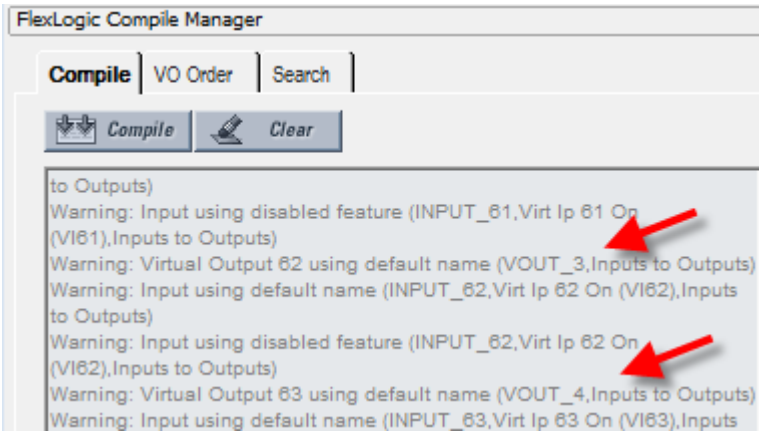

Figure 143: Compile and check the logic

12. View the FlexLogic equations by navigating in the Offline Window area to **FlexLogic > FlexLogic Equation Editor**. The window opens with the entries displayed in the next tab.

FLEXLOGIC ENTRY	TYPE	SYNTAX
View Graphic	View	View
FlexLogic Entry 1	Virtual Inputs On	Virt Ip 61 On (VI61)
FlexLogic Entry 2	Assign Virtual Output	= Virt Op 61io (VO61)
FlexLogic Entry 3	Virtual Inputs On	Virt Ip 62 On (VI62)
FlexLogic Entry 4	Assign Virtual Output	= Virt Op 62io (VO62)
FlexLogic Entry 5	Virtual Inputs On	Virt Ip 63 On (VI63)
FlexLogic Entry 6	Assign Virtual Output	= Virt Op 63io (VO63)

Figure 144: Logic displayed in FlexLogic Equation Editor

13. Save the work.

The logic diagram has been created and the FlexLogic equations populated. The next steps are to upload the file to the device and to monitor the device.

5.5.2.4 COMPILED RESULTS AND WARNING MESSAGES

When a yellow caution symbol displays in the Offline Window area, it means that the settings file is not synchronized with the online device. Right-click the device in the Offline Window area, and select the Update SCL files option. SCL refers to the Substation Configuration Language. An Instantiated IED capability description (IID) file is an example of an SCL file and contains the actual settings on a UR device.

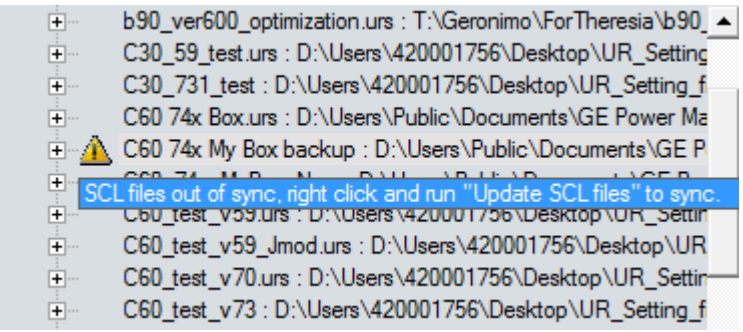

Figure 145: Settings files not synchronized between offline and online files

When the **Update SCL files** option is selected, the CID and IID files in the device folder are updated by the user configuration in the IEC 61850 panel and thereby become synchronized. The CID file and the IID file (depending on the preference 'Do not update IID file when updating SCL files') are updated. If the CID file is not already there, it is generated. The location of these files is

`C:\ProgramData\GE Power Management\urpc`, for example, in the **Offline** and **Online** folders.

Any FlexLogic equations entered in the Offline Window area are erased. The logic drawn in the Logic Designer window in Engineer in the Offline Window area remain. The warning icon disappears after updating. The following information is contained in the compile window.

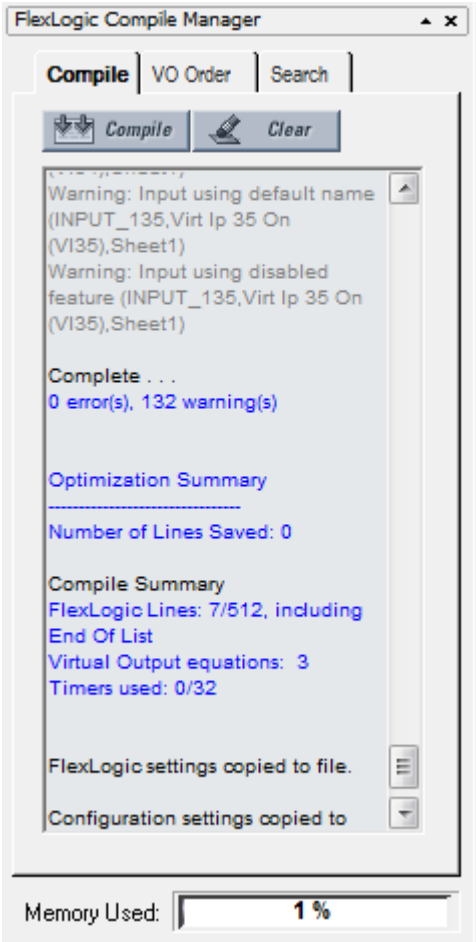

Figure 146: Compiled results

- Number of Lines Saved — The number of compiled logic lines eliminated by using the optimization algorithm, as set in the **Optimize Compiled Output** option of the Preferences. In the example shown, no lines were saved because the optimizer is disabled.
- **FlexLogic Lines** — The number of lines that the compiled logic uses, for example seven of 512 available.
- **Virtual Output equations** — The number of FlexLogic equations used in the Logic Designer window.
- **Timers used** — The number of timers used in the Logic Designer window.
- **Memory Used** — The percent of memory used in the Logic Designer window.

Compilation errors

Category	Block gate or gate affected	Message	Description
Error	All	Number of lines (nnn) exceeds maximum limit of 512	The compiled result exceeds the limit of 512. Reduce the number of equations to 512 or less.
Error	Tag-In	Tag-in not configured (TAG_ID, SheetReference)	A Tag-In is connected to a circuit but the Tag-In is not referencing an existing Tag-Out

Category	Block gate or gate affected	Message	Description
Error	1 Shots	One Shot is over limit (SYMBOL_ID, SheetReference)	The number of One-Shots contained within all of the VO blocks has exceeded the maximum allowed for the firmware revision. This value can either be 0 or 32.
Error	=VO	VO has no inputs (VO_ID, SheetReference)	A Virtual Output block is located within the FlexLogic diagram and there is no block connected as input to it. Connect and identify the inputs.
Error	Time	Timer used more than once (TIMER_ID, SheetReference)	The same timer is used in more than one place in the editor. This means either the circuit that the Timer belongs to has been branched, or the Timer has been duplicated.
Error	Input	Unrecognized Parameter SYMBOL_ID,Name,SheetReference)	An Input symbol is configured to an item that is not recognized by the current order code and version. Possible cause: The order code and/or version of the settings file was converted causing the input parameter to become unavailable.

Compilation warnings

When using the `Reset OP` operand, a warning can appear indicating that this is a disabled feature. This means that the Reset Settting's FlexLogic operand is set to `OFF`. Resetting of the relay can be done by pressing the reset button on the front panel of the relay or by sending a Reset command through communications.

Category	Block gate or gate affected	Message	Description
Minor warning	Input	Input set to unused VO (SYMBOL_ID,Name,Sheet)	An Input symbol is using an unassigned Virtual Output
Major warning	Tag-out	Tag-out not connected (TAG_ID,Sheet)	A Tag-Out symbol has no input
Major warning	All	Symbol not connected (SYMBOL_ID,Name,Sheet)	A symbol's input and/or output is not connected and is not part of a VO block. Draw the input and/or output to the block.
Minor warning	=VO	Virtual Output n using default name (VO_ID,Sheet)	The Assigned Virtual Output is using the default name. Change the name.
Minor warning	Input	Input using default name (SYMBOL_ID,Name,Sheet)	An Input symbol is using a Contact Input, Contact Output, Digital Element, FlexElement, or Digital Counter set to the default name. Change the name so that it is unique.
Setting warning	Input	Input using disabled feature (SYMBOL_ID,Name,Sheet)	An Input symbol is using a disabled Virtual Input, Contact Input, Digital Element, FlexElement, Digital Counter, Control Pushbutton, Programmable Pushbutton, Contact Output, or Protection/Monitoring Element. Enable it and try again.
Major warning	Input	Input set to OFF (SYMBOL_ID,Sheet)	An Input symbol is set to OFF
Major warning	Input	Input set to ON (SYMBOL_ID,Sheet)	An Input symbol is set to ON
Setting warning	Input	Contact Output Operate is OFF (SYMBOL_ID, Contacts)	The symbol block is using the default setting of OFF
Setting warning	Input	Contact Output Seal-In is OFF (SYMBOL_ID, Contacts)	The symbol block is using the default setting of OFF

5.5.2.5 RAPIDLY ADD LOGIC BLOCKS IN SEQUENCE

Blocks are added by clicking an element then clicking in the drawing area, or by dragging and dropping the element onto the canvas. Blocks can be added rapidly in sequence, for example when you have inputs 1 to 10, without having to select the element each time.

1. In Engineer, click **File > Preferences**. The window opens.
2. Click the **Editor** entry.
3. Enable the **Repeat Symbol** check box.
4. Click the **OK** button to save and exit from the window.
5. In the logic diagram, select an element, then click in the drawing area to add it, click again to add a second box, and so on.

5.5.2.6 CONNECT TWO LOGIC DIAGRAMS

When the logic is complex and requires two sheets, for example, these two sheets can be connected. By connecting them, the logic is continuous from one sheet to the next.

1. In the first sheet, click the **I/O Tokens** tab.
2. Scroll to the bottom, and click and drag the **Tag Out** element to the sheet where the next sheet is to connect.
3. Double-click the element and in the window that opens, give it a name, such as "To Sheet 2" or "To IO Sheet 2."

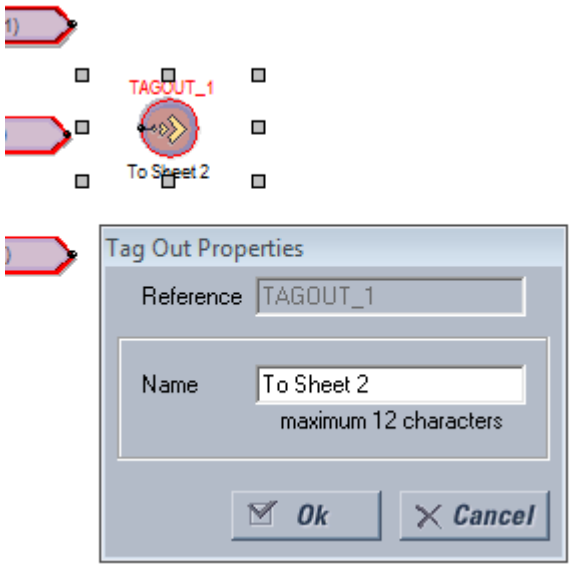

Figure 147: Connecting sheet 1 to sheet 2

4. In the second sheet, click and drag the **Tag In** element to the sheet where the first sheet is to connect.
5. Double-click the element and in the window that opens, select the first sheet from the drop-down list to connect the two sheets.
6. Save the work.

5.5.2.7 OPTIMIZE THE LOGIC

The number of available FlexLogic entries depends on firmware, for example 515 or 1024 lines. The software can automatically optimize a logic diagram to reduce space and free up entries.

1. In Engineer, enable the **Optimization** check box in the **Compile** tab. With this option enabled, the software automatically optimizes a logic diagram to reduce space and free up FlexLogic entries.
2. Run the compiler by clicking the **Compile** button. The number of saved lines displays in the **Optimization** Summary. Changes also display when the FlexLogic Equation Editor is accessed. The logic diagram does not change. In the example shown, no lines were saved to free up space.

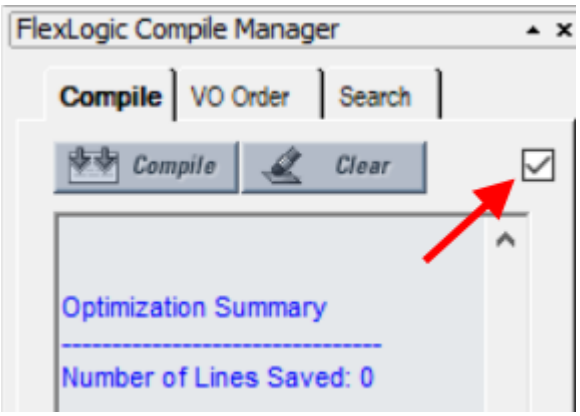

Figure 148: Code optimization results

5.5.2.8 CHANGE LOGIC ORDER

The order in which the FlexLogic is populated in the FlexLogic Equation Editor window depends on settings.

First, when automatic sorting is not enabled, the sequence in which the blocks were drawn is followed.

Second, the order in which equations are executed can be manually changed, as outlined here.

Third, automatic sorting can be set in preferences, as outlined here. It is enabled by default and means that an algorithm is implemented to give best results and quickest performance, For example, the block with the fastest execution time is entered first in the FlexLogic. When two block functions have the same execution time the block drawn first displays first in the FlexLogic. For example, drawing input 61 to output 61, then input 62 to output 62 causes the input/output 61 to be entered into the FlexLogic first. Automatic sorting takes precedence over manual sort; if you enable this option, manual sorting is not implemented.

To manually change logic order:

1. In the compile area, click the **VO Order** tab.
2. If the window is blank, click the **Refresh** button.
3. Select an entry and click the up or down arrow. To cancel any manual changes, click the **Sort** or **Refresh** button.
4. Recompile. The change is not executed or saved if automatic sorting is enabled

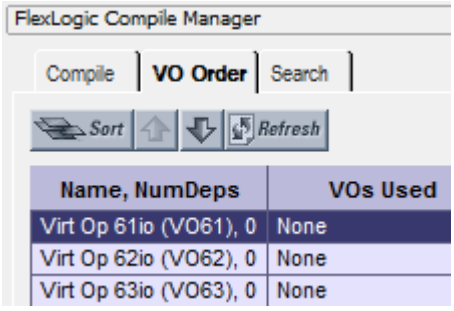

Figure 149: Ordering FlexLogic entries

To set automatic sorting:

1. In Engineer, under **File > Preferences**, select the Compiler option. The **Automatically Sort VOs** option means that the block with the fastest execution time is entered first in the FlexLogic. When two block functions have the same execution time the block drawn first displays first in the FlexLogic. For example, drawing input 61 to output 61, then input 62 to output 62 causes the input/output 61 to be entered into the FlexLogic first.

5.5.2.9 SEARCH LOGIC

Items that can be searched in a logic diagram include gates, Input, Contact Input, Contact Output, Timer, Virtual Output, Tag In, Tag Out, and User-programmable LED. You can perform a search while designing or monitoring.

1. In the compiler area of Engineer, click the **Search** tab.
2. Use one of the following methods to set search criteria:
   a. Select an element from the first drop-down list. Results display automatically.
   b. Type in the second text string box, or select any of the 32 previous searches from the drop-down list. Click the **Search** button. Any results display.

      The search applies to all tabs, not just the active tab.
3. Double-click a search result to view the item.

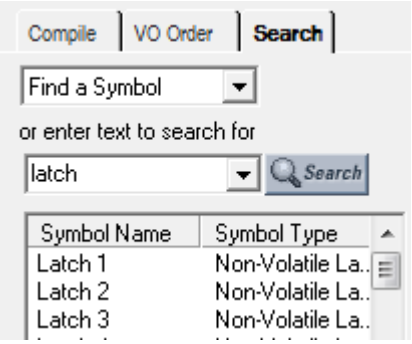

Figure 150: Search function

You can also select an element from the drop-down list on the toolbar. It is then highlighted in the logic diagram

5.5.2.10 EXCLUDE SHEET FROM COMPILE

While designing the FlexLogic equations, you can remove entire sheets from the compile logic. This allows you to test various schemes by placing schemes on separate sheets and including either sheet at compile time.

1. In the Logic Designer window, right-click the tab and select the **Exclude from Compile** option so that the check mark displays. When sheets are excluded, a message displays with each compile that `excluded sheets will not be reflected in the RPN`. An excluded sheet is denoted with end brackets, similar to < Sheet 1 >.

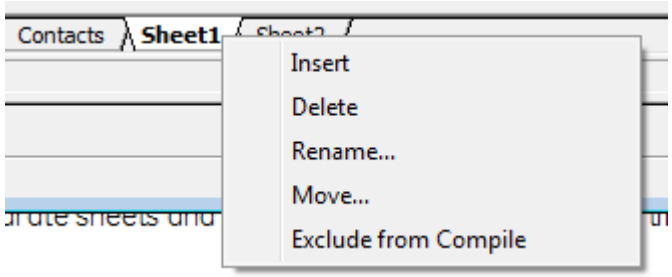

Figure 151: Excluding a tab from compiling

5.5.3 SEND FILE TO AND FROM DEVICE

With the logic diagram created, compiled, and errors eliminated, the FlexLogic can be sent to a live device. And, conversely, a file from a live device can be added to the Offline Window area for additional work.

To send a file to a device:

1. In the Offline Window area of the software, right-click the device name and select the **Write Settings to Device** option. A prompt can appear that the URS file has been repaired; acknowledge the message.
2. When a window opens, select the device to which you want to send the file, then click the **Send** button and confirm. The order codes and IEC 61850 edition must match. The file is sent to the live device. Any errors can be viewed in the log file at the prompt.

To import a file from a device:

1. Close all open files in Engineer that relate to the device, else a message displays to that effect, for example to close the FlexLogic view associated with the file. When the file is not associated with a live device, a message displays to that effect; you need to identify the device to which you want to send the file. The order codes must match.
2. Right-click the device in the Online Window area and select the **Add Device to Offline Window** option. After you enter a name for the file, it is written to the Offline Window area.

5.5.4 MONITOR LOGIC

After creating the logic diagram, validating it, and uploading the FlexLogic to a device, the results from the device can be viewed.

The following checks are performed automatically when switching from design to monitoring, and prompts display when necessary:

- Verify that the order code of the linked relay matches the settings file
- Verify that the version of the linked relay matches the settings file
- Verify that the FlexLogic Equation Editor of the linked relay matches the settings file. Solution: Compile the FlexLogic logic diagram and send the settings file to the relay.
- Verify that the FlexLogic Timers of the linked relay match the settings file. Solution: Compile the FlexLogic logic diagram and send the settings file to the relay.
- If the settings file contains a serial number lock, then verify that the serial number of the linked relay matches the settings file

To view results:

1. In the Offline Window area of the software, expand the Engineer entry for the device.

2. Double-click the **Logic Designer** entry and Compile the logic.

3. Double-click the **Logic Monitor** entry, or click the M button in the toolbar at the top of the window.

With successful launch, the logic displays and a green indicator displays at the bottom of the tab.

When the file is not associated with a live device, a message displays to that effect; you need to identify the device to which you want to send the file. The order codes must match between the Offline Window and the Online Window.

When the device is offline, a message indicates problems communicating with the device.

When the devices are not synchronized, a message indicates the FlexLogic does not match the settings file. To send the offline file to the device, right-click the device name and select the Write Settings to Device option.

When the state of a symbol is OFF, the symbol is shown in the default color or no color.

When a symbol's state changes to ON, the symbol and connection line turns green.

The state of some symbols can either be unknown or the state transitions faster than the update interval. For these two cases, the state of the symbol is considered 'UNKNOWN' and the symbol is outlined in red.

The colors for the ON and Unknown state can be customized in the Preferences.

The figure shows that the software is communicating with devices (square green indicator) and that a minor error is present (green box outline). In this case, the battery is weak and needs to be replaced. This can be viewed as the Replace Battery message on the front panel of the device and in the EnerVista software under **Actual Values > Front Panel > Front Panel** or **Display/Keypad**.

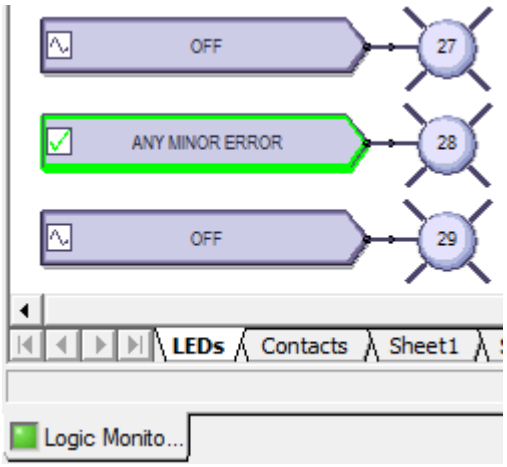

Figure 152: Monitoring a device, with minor error caused by weak battery

5.5.5 VIEW FRONT PANEL AND PRINT LABELS

This window displays the LEDs that are on the front panel. You can create labels and print them for the device. You do not use the window to add text labels and upload them to the device. Custom labeling is also outlined earlier in this chapter; see the Front Panel Labeling section.

To view the front panel:

1. In the Offline Window area of the software, expand the **Engineer** entry for the device.
2. Double-click the **Front Panel Report** entry. The report displays. The Device Summary is read from the settings file and cannot be changed. The LEDs and pushbuttons display below the summary.
3. To save the report, click **File > Save As**, enter a file name, and select the front panel report (FPR), JPG, or PDF format.

To print labels:

1. In the **Front Panel Report** window, double-click an LED or pushbutton and enter text.
2. To print the labels, click the **Print** icon on the toolbar.
3. To save the report and labels, click **File > Save As**, enter a file name, and select the FPR, JPG, or PDF format.
4. Use the instructions in the second tab of the window to add the labels to the physical device.

5.5.6 GENERATE CONNECTIVITY REPORT

This report displays basic information about a device, such as order code, port numbers, inputs and outputs. You can use it to create a PDF file of basic information. The report is based on CID and/or IID files, and not the system or full SCD. All device details including Remote Inputs, Remote Outputs, and Analog Inputs/Outputs are indicated, including quantities used and available.

To display a device report:

1. In the Offline Window area of the software, expand the **Engineer** entry for the device.
2. Double-click the **Device Connectivity Report** entry. The report displays.
3. To save as a PDF file, click **File > Save As**.

5.5.7 PREFERENCES

Preferences determine functionality. As such, you are encouraged to review them. This section outlines some options available in the menus and preference panels.

Access them in the Logic Designer panel under the View menu and under **File > Preferences**. The Logic Designer and Logic Monitor preferences are outlined here, not all preferences for a device.

5.5.7.1 VIEW MENU

View > Toolbar > Advanced Actions — Active when in Logic Designer. Toggles a toolbar to nudge, rotate, flip, or change the order of an element.

View > Show Unused Pins — Enable to display unconnected pins. Disable to eliminate unconnected pins from the view, for example when printing:

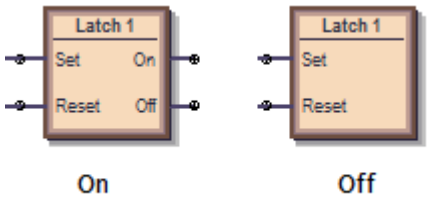

Figure 153: Unused pins on and off

5.5.7.2 LOGIC DESIGNER

The path is **File > Preferences > Logic Designer**.

Workbook Setup

Option	Description
Size and Units	Changes the size of diagram area displayed in Engineer. If you set the size to be smaller than an existing logic diagram, the content is cut off.
WorkBook > Print Scale	The scale for logic diagram when printing. Scaling a large diagram to 200 percent, for example, results in the diagram being cut off.
WorkBook > Orphan Protection	When enabled, the printing output prevents Virtual Output circuits from spanning more than a single page. The largest Virtual Output circuit is scaled to fit on a single page and all remaining Virtual Output circuits are scaled so that all circuits are printed using the same scale.
WorkBook > Show Title Block	When enabled, places an information box at the bottom right of the diagram when printing. Enter the information in the File Information panel.
WorkBook > Show Sheet Name	When enabled, shows Sheet 1, Sheet 2, or any other name at the top of the logic diagram when printing.

Option	Description
WorkBook > Start Sheet On New Page	Places the sheet on the next page when printing.
WorkBook > Show Notes Selection	When other than None, prints the text from any information notes added to the document (under Drawing Tools tab > Note). The text is printed after the logic diagram.
File Information	The text entered here displays at the bottom right of a diagram when printing, provided that the Show Title Block option is enabled. Note the option to change the logo from the GE logo to your company logo.

Display

The panel sets how the element boxes display. The figure shows how an AND gate displays when the UR default, IEC, or ISO symbol type is selected.

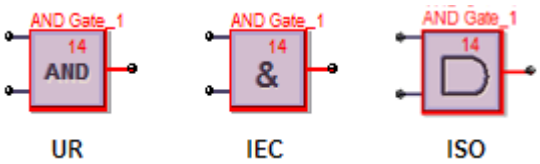

Figure 154: AND gate varies by standard selected

Editor

Option	Description
Repeat Symbol	Enable this feature to add element blocks rapidly in sequence, for example when you have inputs 1 to 10, without having to select the element each time. Select the element block from the toolbox, click the diagram, then continue to click to add additional blocks.
Use first available VO / Timer	When enabled and you copy and paste a virtual output or timer element, the numbering continues in sequence. For example, you copy timer 5 and paste it as timer 6. When disabled and you copy and paste a virtual output or timer element, the same number is used. For example, you copy timer 5 and paste it as timer 5
Auto-Save Logic Designer every x minutes	Logic diagrams with changes are saved automatically according to this interval. The range is 5 minutes (default) to 30 minutes. With auto-save, the file extension of the saved file is .auto. This file remains until you save the file manually.

Auto Populate

These options work in the **Edit > Auto Populate Workbook** function

Option	Description
VOs per Worksheet	When an existing settings file is opened in the Logic Designer, the Logic Designer populates the canvas and attempts to evenly distribute the Virtual Output circuits across multiple sheets. A value of 100 in this setting places all FlexLogic equations on a single sheet until there are 100, then the next ones are placed on another sheet. A value of 1 places each Virtual Output circuit on a separate sheet.
Show / FlexLogic Merge / Show Unuse	If Show Contact Outputs and Show LEDs are selected, for example, the function places Contact Output and User-programmable LED symbols for settings that are configured. If you disable the LED check boxes, then the LED tab/sheet does not display when you next open the Logic Designer window. The settings apply to all products, not just the active window when it is next opened. Close then reopen the Logic Designer window for the setting to take effect.

Compiler

Option	Description
Show Warnings	Options to filter the messages that display when logic compiles.
Minor	Enable to display minor errors. An example is using the default values of an element added to the diagram, such as the name of the element. An example is "Warning: Virtual output xx using default name," for which you simply click into the element to rename it.
Major	Enable to display major errors. Examples are an input that does not have a corresponding output, using disabled features, and failing to connect a symbol. Fix these errors.
Setting	Enable to display error message related to settings, such as an improperly configured setting, such as using ON or OFF.
Automatically Sort VOs	When enabled, the logic is compiled with an algorithm to give best results and quickest performance, for example the fastest logic first. The fastest logic displays in the FlexLogic Equation Editor output as the first entries in the table. Use sorting when virtual outputs have dependencies on other virtual outputs. This setting takes precedence over order set manually in the **VO Order** tab in the compiler. When disabled, the sequence in which the blocks were drawn is followed
Optimize Compiled Output	Not applicable. Use the check box outlined earlier in the Optimize the Logic section

5.5.7.3 LOGIC MONITOR

Display

The software displays the color specified when an element is on. There is no color when the element is off. The software displays another color when the status cannot be determined and is unknown.

Timing

Timing Information can be displayed in the monitoring window. This timing information is only an approximate representation of how Engineer sees transitions. Use the device's Event Record to view accurate timing information.

The timing information can also be streamed to a comma-separated values (CSV) spreadsheet.

The timing information displayed and recorded can be filtered based on six categories. If a category is not selected, any timing information related to that category does not display and is not recorded to the CSV file.

Option	Description
Show Timing Information in Output Window	Enable to display times in the monitoring window. Because of the update rate of the Logic Monitoring, the timing information cannot be used as an accurate representation of the events that occur within the relay. Use instead the device's event record. Timing information can be delayed by 30 seconds.
Save Timing Information to CSV File	Enable to write timing information in a spreadsheet. The timing information is recorded in a text file that uses commas to separate each of the fields. This file uses the extension CSV that is supported by any spreadsheet application. Every change written to the CSV file requires a timestamp.

Timestamp format

```
yyyy/mm/dd hh:dd:ss, devicename, offline
yyyy/mm/dd hh:dd:ss, devicename, ONLINE
yyyy/mm/dd hh:dd:ss, VO1: Virt Out 1, 0
yyyy/mm/dd hh:dd:ss, VI4: Virt In 4, 1
yyyy/mm/dd hh:dd:ss, DI3: Direct In 3, 0
```

```
yyyy/mm/dd hh:dd:ss, RI2: Remote In 2, 1
yyyy/mm/dd hh:dd:ss, H5a: Contact In 1, 1
yyyy/mm/dd hh:dd:ss, H1: Contact Output 1, 0
```

> *Note:*
> *Data is only appended to the CSV file*

> *Note:*
> *Options display for filtering, such as recording timing for Virtual Inputs and Outputs, but not Communications Status*

5.5.7.4 COMTRADE WAVEFORMS

Waveform files are viewable in the EnerVista software. The preferences are unrelated to Engineer and are outlined in the UR Family Communications Guide.

5.5.8 TOOLBARS

These are toggled in the ***View > Toolbar*** menu.

The UR symbols are displayed for the toolbox icons. They change when the default setting is changed to IEC or ISO symbols. The symbols displayed in the toolbox also vary by firmware version, reflecting what is supported for each release.

FlexLogic Editor toolbar

Figure 155: FlexLogic Editor toolbar

From left to right:

- Create a new settings file
- Open an existing settings file in the URS, CID, or IID format
- Save the Logic Designer diagram
- Create a PDF document from Logic Designer diagram(s). Settings can be changed under File > Preferences > Workbook Setup.
- Display or hide the compile window area
- Select to change the sort order of the Virtual Output list to the right of the icon. Virtual Outputs can be sorted numerically in ascending and descending order based on numbers and names.
- Select a Virtual Output to locate and select it in the workbook. Each Virtual Output listed also contains the name of the sheet where the Virtual Output is located.
- Switch to Logic Designer mode
- Switch to Logic Monitor mode
- Turn on all communications to all Logic Designer diagrams that are in the monitoring mode. Default upon each launch of Engineer.
- Turn off all communications to all Logic Designer diagrams that are in the monitoring mode. This is a legacy function for serial communication to turn off communication to devices. Turning off communication applies to the current session only. When you re-launch the EnerVista software, communication is on by default.

Token Toolbox

Figure 156: Drawing Tools

From left to right:

- Draw a line. Click and drag to draw.
- Draw multiple joined lines. Click and drag for each line. Double-click to finish.
- Draw multi-sided object. Click for each line. Double-click to finish.
- Draw four-sided object. Click and drag to draw.
- Draw multiple curves. Click for each line. Double-click to finish.
- Draw multiple, closed curves. Click for each line. Double-click to finish.
- Draw oval or circle. Click and drag to draw.
- Add text box with rectangle around it. Click to add. Double-click it to change text.
- Add figure. Select file in the window that opens, then click on diagram canvas to add figure.
- Add note icon and text. Click to add. Double-click to edit the title and text.

I/O Tokens

These are parts used in FlexLogic equations. They are the inputs and outputs of the Virtual Output equations. The display can vary from that shown here.

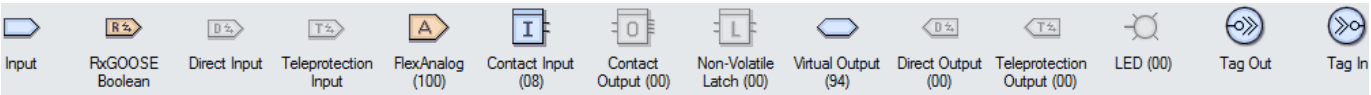

Figure 157: I/O tokens

From left to right:

- Input symbol that can be configured to any FlexLogic operand value
- Remote inputs from other devices
- Input from another UR device. Teleprotection inputs/outputs and direct inputs/outputs are mutually exclusive and cannot be used simultaneously.
- Teleprotection inputs/outputs and direct inputs/outputs are mutually exclusive and cannot be used simultaneously.
- FlexAnalog symbol that can be used as the input to a FlexElement or use the FlexAnalog symbol to monitor an actual value when in logic Monitoring mode
- Contact Input Gate is similar to the Input symbol but is restricted to the operands associated with a Contact Input
- Contact Output Gate is similar to the Input symbol but is restricted to the operands associated with a Contact Output. The Operate and Seal-In settings can be configured graphically.
- The Non-Volatile Latch is similar to the Input symbol but is restricted to the operands associated with a Non-Volatile Latch. The Set and Reset settings can be configured graphically.
- The final output of an equation is a numbered register called a virtual output. Virtual outputs can be used as an input operand in any equation, including the equation that generates the output, as a seal-in or other type of feedback.
- Place and configure a Remote Output. The UR's order code and firmware version then determine the availability of the Remote Output.

- Place and configure a Direct Output. The UR's order code and firmware version then determine the availability of the Direct Output to another UR device.
- Place and configure a Teleprotection Output. The UR's order code and firmware version then determine the availability of the Teleprotection Output.
- Place a User Programmable LED in the Logic Designer diagram. Not applicable when using a graphical front panel.
- A Tag Out can be used in 1 of 2 ways. The first use of the Tag Out is to break up logic that needs to span several sheets. The second use of the Tag Out is to associate a frequently used block of code with the Tag Out and then repeatedly use the same block of code using a Tag In. When a Tag Out is referenced more than once, the Tag Out is replaced with a Virtual Output during the compile phase.
- Tag-In can is used to reference an existing Tag-Out. It joins another diagram to a previous diagram.

Boolean Tokens

These symbols are used to create FlexLogic Equations. Use them as intermediate logic for the Virtual Output equations. The display can vary from that shown here.

Figure 158: Boolean tokens

From left to right:

- Place an OR gate in the Logic Designer diagram. Only one action needs to occur. Any function input on the left side satisfies the condition.The number of inputs is configurable from two to 16.
- Place an AND gate in the Logic Designer diagram. Multiple actions need to occur. All functions input on the left side are required to satisfy the condition. The number of inputs is configurable from two to 16.
- Place a NOR gate in the Logic Designer diagram. Gives the value of one when all input operands have a value of zero and otherwise gives a value of zero. It gives an output signal when there are no input signals. An inverter that reverses the logic state. The number of inputs is configurable from two to 16.
- Place a NAND gate in the Logic Designer diagram. Gives the value of zero when all input operands have a value of one and otherwise gives a value of one. It gives an output signal until all signals are present on its inputs. An inverter that reverses the logic state. The number of inputs is configurable from two to 16.
- Place a XOR gate in the Logic Designer diagram, which is two exclusive OR gates. Only one action needs to occur. If there are two inputs or there is no input, there is no output.
- Place a NOT gate in the Logic Designer diagram. Gives the value of one when the input operand has a value of zero and otherwise gives a value of zero. It gives an output signal when there is no input signal. An inverter that reverses the logic state.
- Place a latch in the Logic Designer diagram. A latch has two inputs and one output. One input is the Set input, and other input is the Reset input.
- Place a positive one shot symbol that responds to a positive going edge in the Logic Designer diagram. A "one shot" is a single input gate that generates a pulse ins response to an edge on the input.
- Place a negative one shot symbol that responds to a negative going edge in the Logic Designer diagram
- Place a positive one shot and a negative one shot symbol in the Logic Designer diagram
- Place a timer in the Logic Designer diagram

Elements

For the following elements, you should use EITHER Logic Designer OR the manual setting screen. Do not use both as this will cause inconsistencies with their settings

These blocks configure properties of the element or use element operands as input to FlexLogic equations.

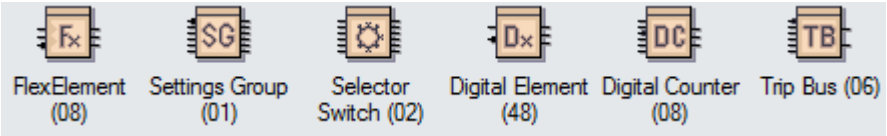

Figure 159: Elements

From left to right:

- Place and configure a FlexElement. A FlexElement is a universal comparator used to monitor any analog actual value calculated by the relay or a net difference of any two analog actual values of the same type.
- Place and configure the Settings Group settings
- Place and configure a Selector Switch element. Firmware version determines feature availability. The Selector Switch element is intended to replace a mechanical selector switch. Typical applications include setting group
- control or control of multiple logic sub-circuits in user-programmable logic. The element provides for two control inputs.
- Place and configure a Digital Element. A Digital Element can monitor any FlexLogic operand
- and present a target message and/or enable events recording depending on the output operand state.
- Place and configure a Digital Counter element. A Digital Counter counts the number of state transitions
- from Logic 0 to Logic 1. The counter is used to count operations such as the pickups of an element.

Basic Actions toolbar

Figure 160: Basic Actions toolbar

From left to right:

- Select components. Click one component and hold down the CTRL key to select others. Or click and drag an area that contains multiple components to select.
- Shows vertices points for the component selected (if the component support vertices manipulation)
- Shows the properties of the selected component
- Zoom in and center the screen to the spot selected
- Zoom in to a magnitude that fits your entire schema layout on your entire screen
- Zoom in on the components that you have selected
- Move the viewable area of your screen around the schema. To activate, select this tool and then place the hand icon over and part of your schema. Click and drag the hand in a direction to move around the schema.
- Align the selected components to the top of the reference component
- Align the selected components to the middle of the reference component
- Align the selected components to the bottom of the reference component
- Align the selected components to the left of the reference component
- Align the selected components to the centre of the reference component
- Align the selected components to the right of the reference component
- Evenly space the selected components across a horizontal axis, starting from the far left component and ending at the far right component
- Evenly space the selected components across a vertical axis, starting from the top component and ending at the bottom component

- Set the width of the selected components to the same width as the reference component
- Set the height of the selected components to the same height as the reference component
- Set the width and height of the selected components to the same width and height of the reference component

Advanced Actions toolbar

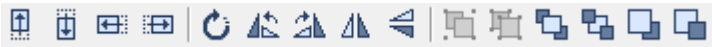

Figure 161: Advanced Actions toolbar

Only basic objects (lines, rectangles, ellipses) can be rotated and flipped.

Only objects from the Drawing Toolbar can be structured (grouped, ungrouped, forward, backward)

From left to right:

- Moves selected component one pixel upward
- Moves selected component one pixe downward
- Moves selected component one pixel left
- Moves selected component one pixel right
- Rotates selected component freely. Once selected, put your mouse cursor over the component and move the component clockwise or counter-clockwise depending on what you need.
- Rotates selected component 90 degrees counter-clockwise
- Rotates selected component 90 degrees clockwise
- Flips the selected component on the vertical axis
- Flips the selected component on the horizontal axis
- Combines all selected components into one combined entity.
- Ungroups components into separate components.
- Moves current components to the absolute front of all viewable layers
- Moves current components to the absolute back of all viewable layers
- Moves current components on layer higher than its original layer hierarchy
- Moves current components on layer lower than its original layer hierarchy

5.5.9 FLEXLOGIC OPERANDS

For flexibility, the arrangement of internal digital logic combines fixed and user-programmed parameters. Logic upon which individual features are designed is fixed, and all other logic, from contact input signals through elements or combinations of elements to contact outputs, is variable. The user has complete control of all variable logic through FlexLogic. In general, the system receives analog and digital inputs that it uses to produce analog and digital outputs. The figure shows major subsystems of a generic UR-series relay involved in this process.

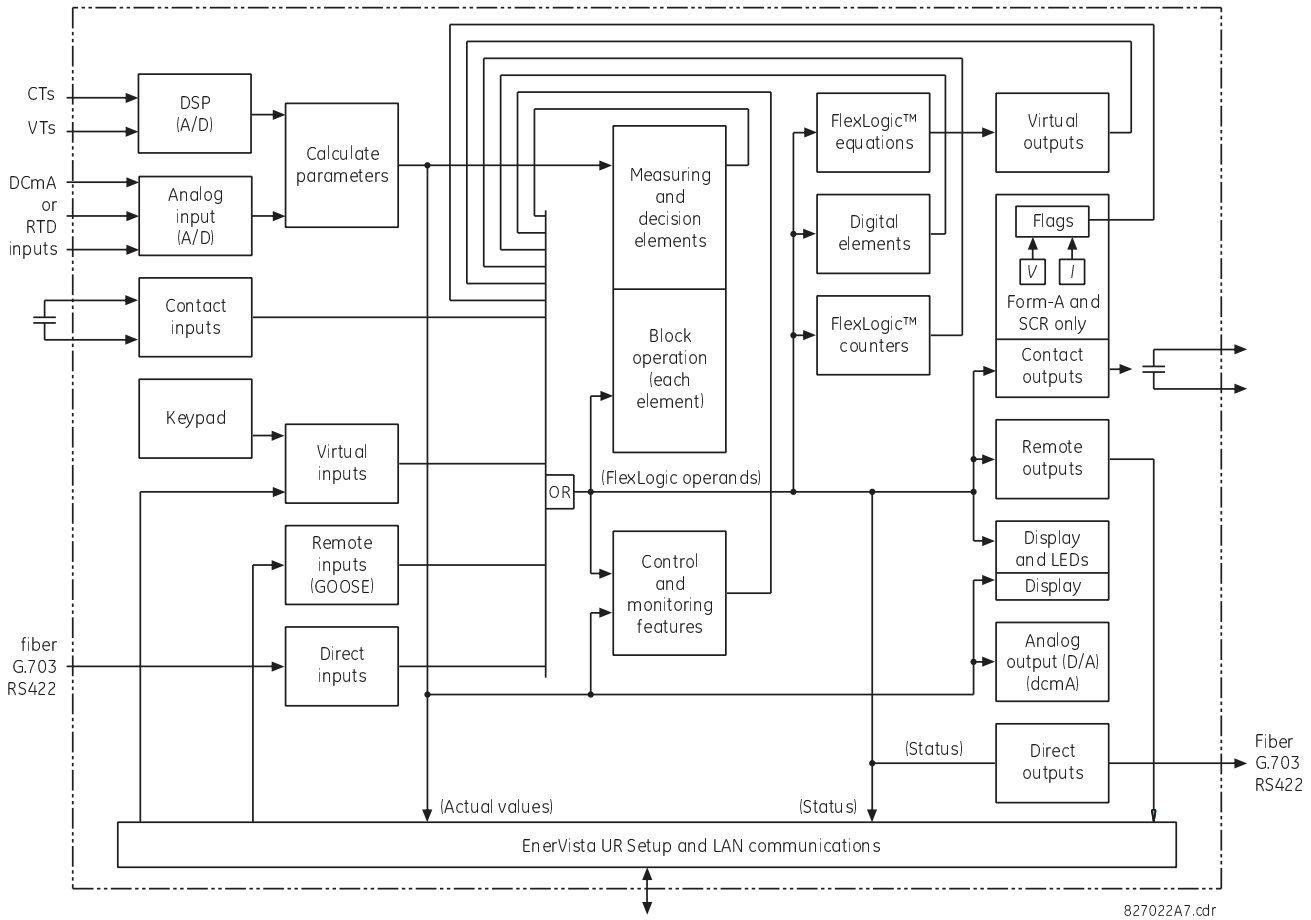

Figure 162: UR architecture overview

The states of all digital signals used in the Product are represented by flags (or FlexLogic operands, which are described later in this section). A digital “1” is represented by a set flag. Any external contact change-of-state can be used to block an element from operating, as an input to a control feature in a FlexLogic equation, or to operate a contact output. The state of the contact input can be displayed locally or viewed remotely via the communications facilities provided. If a simple scheme where a contact input is used to block an element is wanted, this selection is made when programming the element. This capability also applies to the other features that set flags: elements, virtual inputs, remote inputs, schemes, and human operators.

If more complex logic than shown in the figure is required, it is implemented via FlexLogic. For example, to have the closed state of contact input H7a and the operated state of the phase undervoltage element block the operation of the phase time overcurrent element, the two control input states are programmed in a FlexLogic equation. This equation ANDs the two control inputs to produce a virtual output that is then selected when programming the phase time overcurrent to be used as a blocking input. Virtual outputs can only be created by FlexLogic equations.

Traditionally, protective relay logic has been relatively limited. Any unusual applications involving interlocks, blocking, or supervisory functions had to be hard-wired using contact inputs and outputs. FlexLogic minimizes the requirement for auxiliary components and wiring while making more complex schemes possible.

The logic that determines the interaction of inputs, elements, schemes, and outputs is field-programmable through the use of logic equations that are sequentially processed. The use of virtual inputs and outputs in addition to hardware is available internally and on the communication ports for other relays to use (distributed FlexLogic).

FlexLogic allows users to customize the relay through a series of equations that consist of operators and operands. The operands are the states of inputs, elements, schemes, and outputs. The operators are logic gates, timers, and latches (with set and reset inputs). A system of sequential operations allows any combination of operands to be assigned as inputs to specified operators to create an output. The final output of an equation is a numbered register

called a virtual output. Virtual outputs can be used as an input operand in any equation, including the equation that generates the output, as a seal-in or other type of feedback.

A FlexLogic equation consists of parameters that are either operands or operators. Operands have a logic state of 1 or 0. Operators provide a defined function, such as an AND gate or a Timer. Each equation defines the combinations of parameters to be used to set a Virtual Output flag. Evaluation of an equation results in either a 1 (=ON, or flag set) or 0 (=OFF, or flag not set). Each equation is evaluated at least four times every power system cycle.

Some types of operands are present in the relay in multiple instances, for example contact and remote inputs. These types of operands are grouped together (for presentation purposes only) on the front panel display. The table lists characteristics of the different types of operands.

Operand type	State	Example of format	Characteristics [Input Is '1' (= ON) if...]
Contact Input	On	Cont Ip On	Voltage is applied presently to the input (external contact closed)
	Off	Cont Ip Off	Voltage is not applied presently to the input (external contact open)
Contact Output (type Form-A contact only)	Contact Closed	Cont Op 1 Closed	Contact output is closed
	Current On	Cont Op 1 Ion	Current is flowing through the contact
	Voltage On	Cont Op 1 VOn	Voltage exists across the contact
	Voltage Off	Cont Op 1 VOff	Voltage does not exist across the contact
Direct Input	On	DIRECT INPUT 1 On	The direct input is presently in the ON state
Element (Analog): (not C30)	Pickup	PHASE TOC1 PKP	The tested parameter is presently above the pickup setting of an element that responds to rising values or below the pickup setting of an element that responds to falling values
	Dropout	PHASE TOC1 DPO	This operand is the logical inverse of the above PKP operand
	Operate	PHASE TOC1 OP	The tested parameter has been above/below the pickup setting of the element for the programmed delay time, or has been at logic 1 and is now at logic 0 but the reset timer has not finished timing
	Block	PHASE TOC1 BLK	The output of the comparator is set to the block function
Element (Digital)	Pickup	Dig Element 1 PKP	The input operand is at logic 1
	Dropout	Dig Element 1 DPO	This operand is the logical inverse of the above PKP operand
	Operate	Dig Element 1 OP	The input operand has been at logic 1 for the programmed pickup delay time, or has been at logic 1 for this period and is now at logic 0 but the reset timer has not finished timing
Element (Digital Counter): (not B90)	Higher than	Counter 1 HI	The number of pulses counted is above the set number
	Equal to	Counter 1 EQL	The number of pulses counted is equal to the set number
	Lower than	Counter 1 LO	The number of pulses counted is below the set number
Fixed	On	On	Logic 1
	Off	Off	Logic 0
RxGOOSE Boolean	On	RxGOOSE Boolean 1 On	The RxGOOSE Boolean is presently in the ON state
Virtual Input	On	Virt Ip 1 On	The virtual input is presently in the ON state
Virtual Output	On	Virt Op 1 On	The virtual output is presently in the set state (that is, evaluation of the equation that produces this virtual output results in a "1")

A full list of operands for the UR-series of relays is available in the appendix. You can also view them online in a relay by entering the IP address of the relay in a web browser and accessing the **Device Information Menu**.

Note:
Any FlexLogic operands that are visible online but not listed below, are intended for factory use.

You can rename the following operand types if desired.

- Breakers in the breaker control feature
- The ID (identification) of the contact inputs and outputs
- The ID of virtual inputs and outputs.

If you change the default name or ID of any of these operands, the assigned name will appear in the relay list of operands.

The characteristics of the logic gates are tabulated in the following table, and the operators available in FlexLogic are listed in the FlexLogic operators table.

Gates	Number of inputs	Output is '1' (= ON) if...
NOT	1	input is '0'
OR	2 to 16	any input is '1'
AND	2 to 16	all inputs are '1'
NOR	2 to 16	all inputs are '0'
NAND	2 to 16	any input is '0'
XOR	2	only one input is '1'

Type	Syntax	Description	Notes
Editor	INSERT	Insert a parameter in an equation list	
	DELETE	Delete a parameter from an equation list	
End	END	The first END encountered signifies the last entry in the list of processed FlexLogic parameters	
One shot	POSITIVE ONE SHOT	One shot that responds to a positive going edge	A 'one shot' refers to a single input gate that generates a pulse in response to an edge on the input. The output from a 'one shot' is True (positive) for only one pass through the FlexLogic equation. There is a maximum of 64 'one shots.
	NEGATIVE ONE SHOT	One shot that responds to a negative going edge	
	DUAL ONE SHOT	One shot that responds to both the positive and negative going edges.	

Type	Syntax	Description	Notes
Logic gate	NOT	Logical NOT	Operates on the previous parameter
	OR(n)	n input OR gate	Operates on the n previous parameters
	AND(n)	n input AND gate	Operates on the n previous parameters
	NOR(n)	n input NOR gate	Operates on the n previous parameters
	NAND(n)	n input NAND gate	Operates on the n previous parameters
	XOR(2)	2 input Exclusive OR gate	Operates on the 2 previous parameters
	LATCH (S,R)	Latch (set, reset): reset-dominant	The parameter preceding LATCH(S,R) is the reset input. The parameter preceding the reset input is the set input.
Timer	TIMER n	Timer set with FlexLogic timer n settings	The timer is started by the preceding parameter. The output of the timer is TIMER n.
Assign virtual output	= Virt Op n	Assigns previous FlexLogic operand to virtual output n	The virtual output is set by the preceding parameter

5.5.10 FLEXLOGIC RULES

When forming a FlexLogic equation, the sequence in the linear array of parameters must follow these general rules:

1. Operands must precede the operator that uses the operands as inputs.
2. Operators have only one output. The output of an operator must be used to create a virtual output if it is to be used as an input to two or more operators.
3. Assigning the output of an operator to a virtual output terminates the equation.
4. A timer operator (for example, TIMER 1) or virtual output assignment (for example, = Virt Op 1) can be used once only. If this rule is broken, a syntax error is declared.

5.5.11 FLEXLOGIC EVALUATION

Each equation is evaluated in the ascending order in which the parameters have been entered.

FlexLogic provides built-in latches that by definition have a memory action, remaining in the set state after the set input has been asserted. These built-in latches are reset dominant, meaning that if logical "1" is applied to both set and reset entries simultaneously, then the output of the latch is logical "0." However, they are volatile, meaning that they reset upon removal of control power.

When making changes to FlexLogic entries in the settings, all FlexLogic equations are re-compiled whenever any new FlexLogic entry value is entered, and as a result of the re-compile all latches are reset automatically.

To implement FlexLogic using a graphical user interface, see the FlexLogic Design and Monitoring using Engineer section in the previous chapter.

5.5.12 FLEXLOGIC EXAMPLE

This section provides an example of logic implementation for a typical application. The sequence of steps is important to minimize the work to develop the relay settings. Note that the example in the following figure demonstrates the procedure, not to solve a specific application situation.

Note that there is also a graphical interface with which to draw logic and populate FlexLogic equation entries.

In the example, we assume that logic has already been programmed to produce virtual outputs 1 and 2, and is only a part of the full set of equations used. When using FlexLogic, it is important to make a note of each virtual output used; a virtual output designation (1 to 256) can be assigned only once.

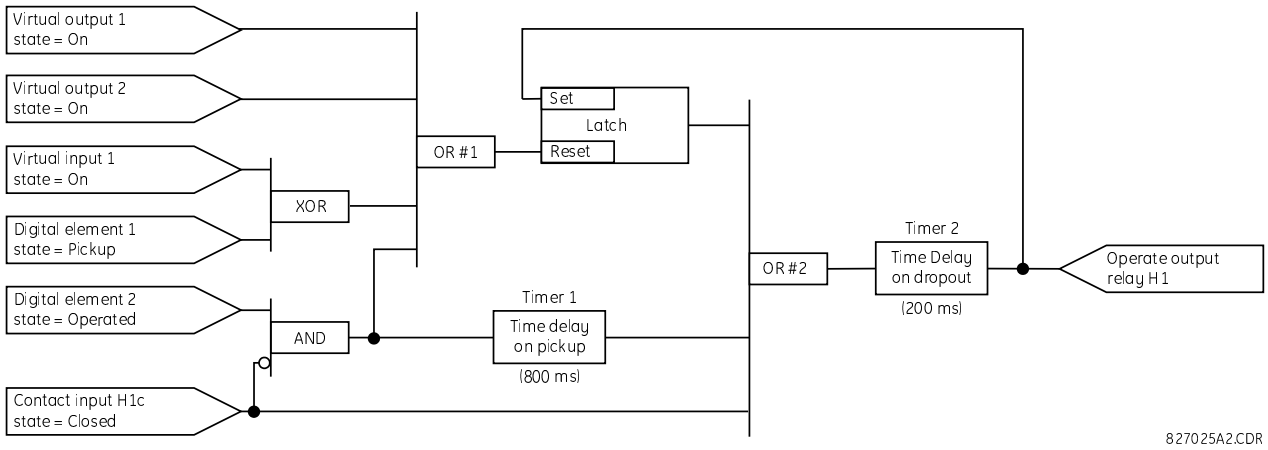

Figure 163: Logic example

1. Inspect the example logic diagram to determine if the required logic can be implemented with the FlexLogic operators. If this is not possible, the logic must be altered until this condition is satisfied. Once done, count the inputs to each gate to verify that the number of inputs does not exceed the FlexLogic limits, which is unlikely but possible. If the number of inputs is too high, subdivide the inputs into multiple gates to produce an equivalent. For example, if 25 inputs to an AND gate are required, connect Inputs 1 through 16 to AND(16), 17 through 25 to AND(9), and the outputs from these two gates to AND(2).

   Inspect each operator between the initial operands and final virtual outputs to determine if the output from the operator is used as an input to more than one following operator. If so, the operator output must be assigned as a virtual output.

   For the example shown, the output of the AND gate is used as an input to both OR#1 and Timer 1, and must therefore be made a virtual output and assigned the next available number (that is, Virtual Output 3). The final output must also be assigned to a virtual output as virtual output 4, which is programmed in the contact output section to operate relay H1 (that is, contact output H1).

   Therefore, the required logic can be implemented with two FlexLogic equations with outputs of virtual output 3 and virtual output 4, shown as follows.

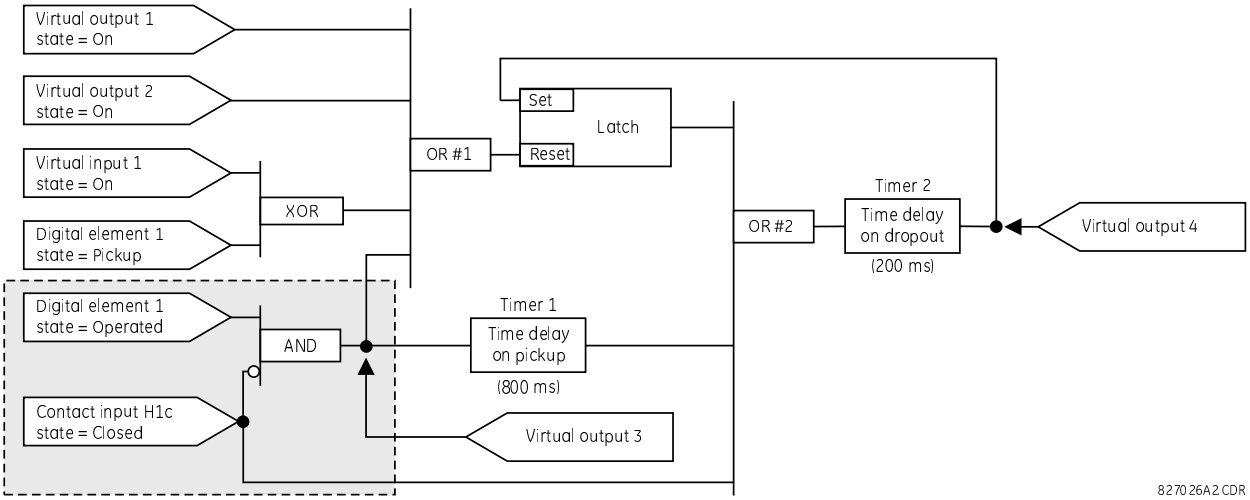

Figure 164: Logic example with virtual outputs

2. Prepare a logic diagram for the equation to produce virtual output 3, as this output is used as an operand in the virtual output 4 equation (create the equation for every output that is used as an operand first, so that when these operands are required they already have been evaluated and assigned to a specific virtual output). The logic for virtual output 3 is shown as follows with the final output assigned.

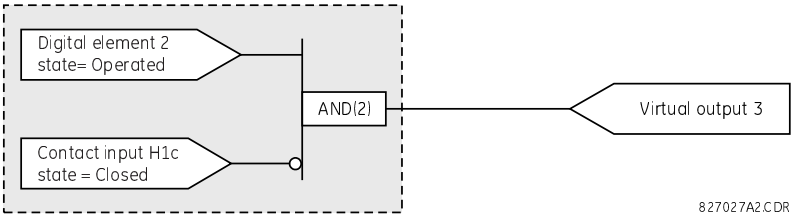

Figure 165: Logic for virtual output 3

3. Prepare a logic diagram for virtual output 4, replacing the logic ahead of virtual output 3 with a symbol identified as virtual output 3, shown as follows.

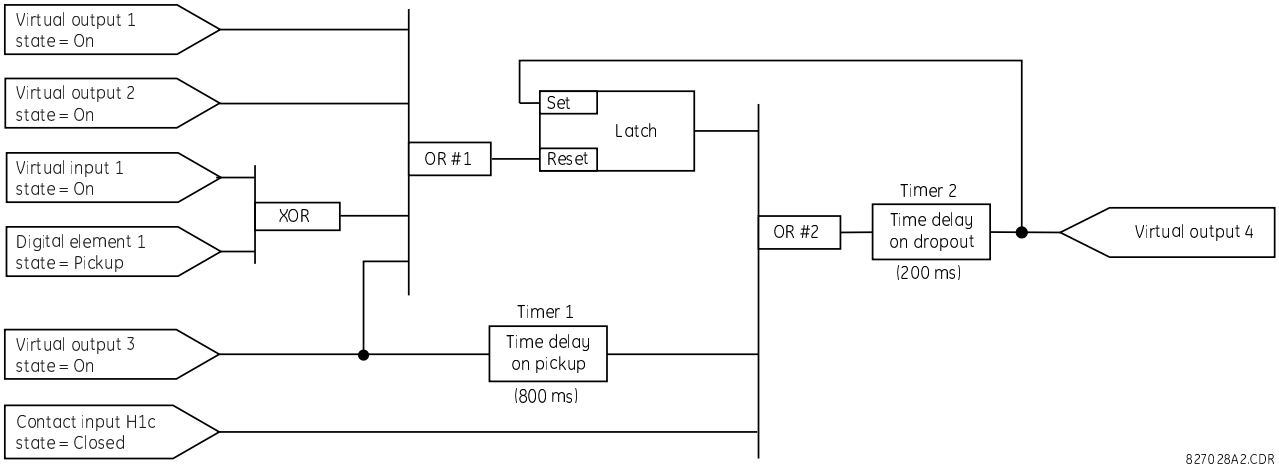

Figure 166: Logic for virtual output 4

4. Program the FlexLogic equation for virtual output 3 by translating the logic into available FlexLogic parameters. The equation is formed one parameter at a time until the required logic is complete. It is generally easier to start at the output end of the equation and work back towards the input, as shown in the following steps. It is also recommended to list operator inputs from bottom to top. For demonstration, the final outputs are arbitrarily identified as parameter 99, and each preceding parameter decremented by one in turn. Until accustomed to using FlexLogic, it is suggested that a worksheet with a series of cells marked with the arbitrary parameter numbers be prepared shown as follows.

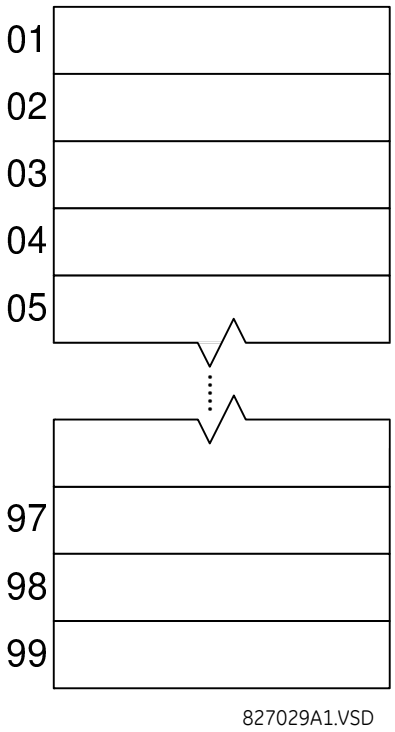

Figure 167: FlexLogic worksheet

5. Following the procedure outlined, start with parameter 99, as follows:

   99: The final output of the equation is virtual output 3, which is created by the operator "= Virt Op n". This parameter is therefore "= Virt Op 3".

   98: The gate preceding the output is an AND, which in this case requires two inputs. The operator for this gate is a 2-input AND so the parameter is “AND(2)”. Note that FlexLogic rules require that the number of inputs to most types of operators must be specified to identify the operands for the gate. As the 2-input AND operates on the two operands preceding it, these inputs must be specified, starting with the lower.

   97: This lower input to the AND gate must be passed through an inverter (the NOT operator) so the next parameter is “NOT”. The NOT operator acts upon the operand immediately preceding it, so specify the inverter input next.

   96: The input to the NOT gate is to be contact input H1c. The ON state of a contact input can be programmed to be set when the contact is either open or closed. Assume for this example that the state is to be ON for a closed contact. The operand is therefore “Cont Ip H1c On”.

   95: The last step in the procedure is to specify the upper input to the AND gate, the operated state of digital element 2. This operand is "DIG ELEM 2 OP".

   Writing the parameters in numerical order forms the equation for virtual output 3:

```
[95] DIG ELEM 2 OP
[96] Cont Ip H1c On
[97] NOT
[98] AND(2)
[99] = Virt Op 3
```

   It is now possible to check that this selection of parameters produces the required logic by converting the set of parameters into a logic diagram. The result of this process is shown in the figure, which is compared to the logic for virtual output 3 diagram as a check.

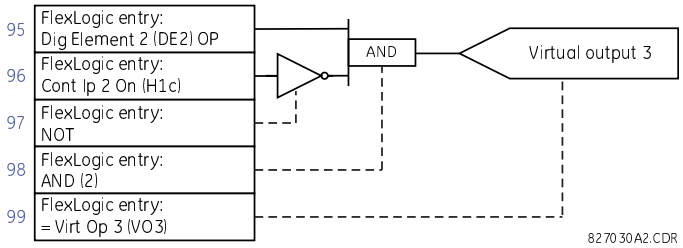

Figure 168: FlexLogic equation for virtual output 3

6. Repeating the process described for virtual output 3, select the FlexLogic parameters for Virtual Output 4.

   99: The final output of the equation is virtual output 4, which is parameter “= Virt Op 4".

   98: The operator preceding the output is timer 2, which is operand “TIMER 2". Note that the settings required for the timer are established in the timer programming section.

   97: The operator preceding timer 2 is OR #2, a 3-input OR, which is parameter “OR(3)”.

   96: The lowest input to OR #2 is operand “Cont Ip H1c On”.

   95: The center input to OR #2 is operand “TIMER 1".

   94: The input to timer 1 is operand “Virt Op 3 On".

   93: The upper input to OR #2 is operand “LATCH (S,R)”.

   92: There are two inputs to a latch, and the input immediately preceding the latch reset is OR #1, a 4-input OR, which is parameter “OR(4)”.

   91: The lowest input to OR #1 is operand “Virt Op 3 On".

   90: The input just above the lowest input to OR #1 is operand “XOR(2)”.

   89: The lower input to the XOR is operand “DIG ELEM 1 PKP”.

   88: The upper input to the XOR is operand “Virt Ip 1 On".

   87: The input just below the upper input to OR #1 is operand “Virt Op 2 On".

   86: The upper input to OR #1 is operand “Virt Op 1 On".

   85: The last parameter is used to set the latch, and is operand “Virt Op 4 On".

   The equation for virtual output 4 is:

```
[85] Virt Op 4 On
[86] Virt Op 1 On
[87] Virt Op 2 On
[88] Virt Ip 1 On
[89] DIG ELEM 1 PKP
[90] XOR(2)
[91] Virt Op 3 On
[92] OR(4)
[93] LATCH (S,R)
[94] Virt Op 3 On
[95] TIMER 1
[96] Cont Ip H1c On
[97] OR(3)
[98] TIMER 2
[99] = Virt Op 4
```

   Now check that the selection of parameters produce the required logic by converting the set of parameters into a logic diagram. The result is shown in the figure, which is compared to the logic for virtual output 4 diagram as a check

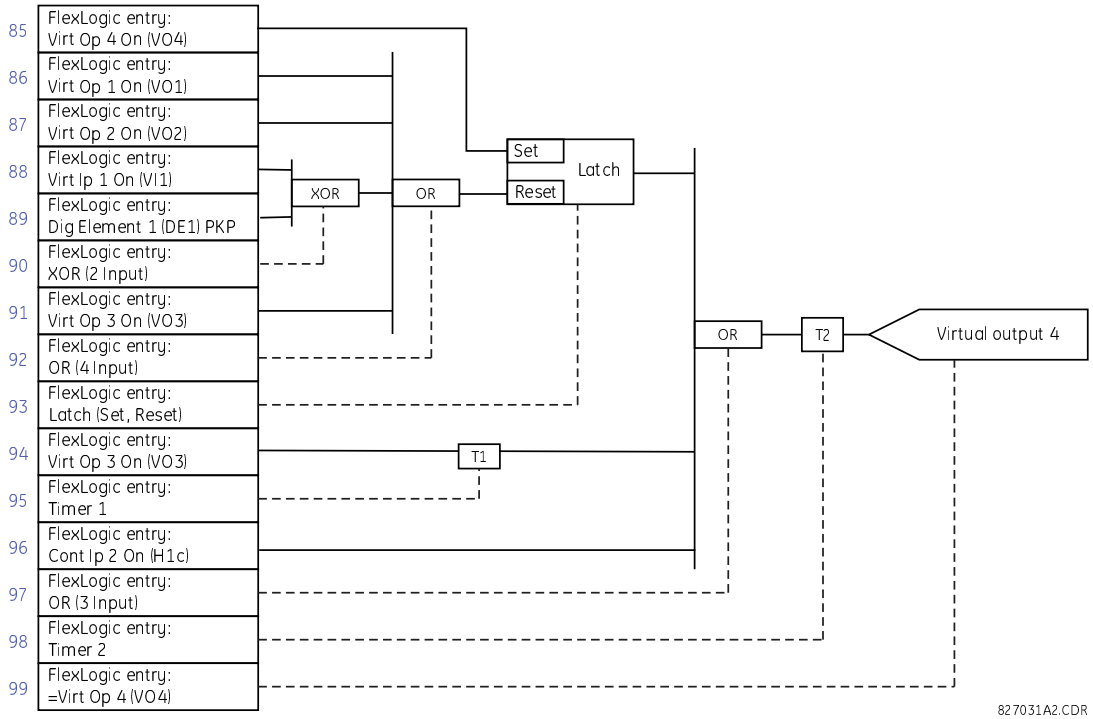

Figure 169: FlexLogic equation for virtual output 4

7. Now write the complete FlexLogic expression required to implement the logic, making an effort to assemble the equation in an order where Virtual Outputs that are used as inputs to operators are created before needed. In cases where a lot of processing is required to perform logic, this can be difficult to achieve, but in most cases does not cause problems as all logic is calculated at least four times per power frequency cycle. The possibility of a problem caused by sequential processing emphasizes the necessity to test the performance of FlexLogic before it is placed in service.

   In the following equation, virtual output 3 is used as an input to both latch 1 and timer 1 as arranged in the following order:

```
DIG ELEM 2 OP
Cont Ip H1c On
NOT
AND(2)
= Virt Op 3
Virt Op 4 On
Virt Op 1 On
Virt Op 2 On
Virt Ip 1 On
DIG ELEM 1 PKP
XOR(2)
Virt Op 3 On
OR(4)
LATCH (S,R)
Virt Op 3 On
TIMER 1
Cont Ip H1c On
OR(3)
TIMER 2
= Virt Op 4
END
```

In this expression, the virtual output 4 input to the four-input OR is listed before it is created. This is typical of a form of feedback, in this case, used to create a seal-in effect with the latch, and is correct.

8. Always test the logic after it is loaded into the relay, in the same way as has been used in the past. Testing can be simplified by placing an "END" operator within the overall set of FlexLogic equations. The equations are evaluated up to the first "END" operator.

   The "On" and "Off" operands can be placed in an equation to establish a known set of conditions for test purposes, and the "INSERT" and "DELETE" commands can be used to modify equations.

5.5.13 FLEXELEMENT BASE UNITS

Unit	Description
87L SIGNALS (Local IA Mag, IB, and IC) (Diff Curr IA Mag, IB, and IC) (Terminal 1 IA Mag, IB, and IC) (Terminal 2 IA Mag, IB and IC)	IBASE = maximum primary RMS value of the +IN and –IN inputs (CT primary for source currents, and 87L source primary current for line differential currents) (L30, L90)
87L SIGNALS (Op Square Curr IA, IB, and IC) (Rest Square Curr IA, IB, and IC)	BASE = Squared CT secondary of the 87L source (L30, L90)
BREAKER ACC ARCING AMPS (Brk X Acc Arc Amp A, B, and C)	BASE = 2000 kA2 ´ cycle (All but B90, C30, N60)
BREAKER ARCING AMPS (Brk X Arc Amp A, B, and C)	BASE = 1 kA2 ´ cycle (All but B90, C30, N60)
BUS DIFFERENTIAL DIFFERENTIAL CURRENT (Bus Diff Mag)	IBASE = maximum phase CT primary current of all configured bays (sources) for a given bus differential zone of the +IN and –IN inputs (B30)
BUS DIFFERENTIAL RESTRAINING CURRENT (Bus Rest Mag)	IBASE = maximum phase CT primary current of all configured bays (sources) for a given bus differential zone of the +IN and –IN inputs (B30)
BUS GROUND DIFFERENTIAL DIFFERENTIAL CURRENT (Bus Ground Diff Mag)	IBASE = maximum ground CT primary current of all configured bays (sources) for a given bus differential zone of the +IN and –IN inputs for “Measured” option or maximum phase CT primary current for “Calculated” option. (B30)
BUS GROUND DIFFERENTIAL RESTRAINING CURRENT (Bus Ground Rest Mag)	IBASE = maximum ground CT primary current of all configured bays (sources) for a given bus differential zone of the +IN and –IN inputs for “Measured” option or maximum phase CT primary current for “Calculated” option. (B30)
CURRENT UNBALANCE (Amp Unbalance)	BASE = 100% (M60)
DCmA	BASE = maximum value of the DCMA INPUT MAX setting for the two transducers configured under the +IN and –IN inputs (All UR products)
DELTA TIME	BASE = 1 µs (All UR products)
FAULT LOCATION	BASE = Line Length as specified in Fault Report (C60, C95, D30, D60, F35, F60, L30, L60, L90)
FIELD CURRENT	IBASE = maximum value setting defined for the specific transducer input configured (G60 only)
FIELD GROUND CURRENT	IBASE = 5 mA (G60 only)
FIELD GROUND FAULT LOCATION	BASE = 100% (G60 only)
FIELD GROUND INJECTED VOLTAGE	VBASE = 15 V (G60 only)

Unit	Description
FIELD GROUND RESISTANCE	RBASE = 250 KΩ (G60 only)
FIELD VOLTAGE	VBASE = 500 V (G60 only)
FREQUENCY	fBASE = 1 Hz (All UR products)
FREQUENCY RATE OF CHANGE	df/dtBASE = 1 Hz/s (D30, D60, F60, G30, G60, L30, L90, N60, T60)
MSOD FREQ_OSC	1 Hz (D60, G30, G60, L90, N60, T60)
MSOD MAG_OSC	1 pu (D60, G30, G60, L90, N60, T60)
MSOD PHASE_OSC	360 degrees (D60, G30, G60, L90, N60, T60)
MSOD DAMPR_OSC	1% (D60, G30, G60, L90, N60, T60)
PHASE ANGLE	jBASE = 360 degrees (see the UR angle referencing convention) (All UR products)
POWER FACTOR	PFBASE = 1.00 (All UR products)
RTDs	BASE = 100°C (All UR products)
SENSITIVE DIR POWER (Sns Dir Power)	PBASE = maximum value of 3 x VBASE x IBASE for the +IN and –IN inputs of the sources configured for the sensitive power directional element(s). (C60, C95, D60, F60, G30, G60, L90, N60, T60)
SOURCE CURRENT	IBASE = maximum nominal primary RMS value of the +IN and –IN inputs (All UR products)
SOURCE ENERGY (Positive and Negative Watthours, Positive and Negative Varhours)	EBASE = 10000 MWh or MVAh, respectively (B30, C60, C95, D60, F35, F60, G30, G60, L90, M60, N60, T60
SOURCE POWER	PBASE = maximum value of VBASE x IBASE for the +IN and –IN inputs (All UR products)
SOURCE THD & HARMONICS	BASE = 1% C70, D60, F35, F60, G30, G60, L30, L90, N60, T60
SOURCE VOLTAGE	VBASE = maximum nominal primary RMS value of the +IN and –IN inputs (All UR products)
STATION BATTERY VOLTAGE MEASUREMENT	V_{DC_BASE} = ***STATION BATTERY NOM VOLTAG***E setting (All UR products)
STATOR DIFFERENTIAL CURRENT (Stator Diff Iar, Ibr, and Icr)	IBASE = maximum primary RMS value of the +IN and –IN inputs (CT primary for source currents, and bus reference primary current for bus differential currents) (G60, M60)
STATOR GROUND 3RD HARMONIC VOLTAGES (Stator Gnd Vn/V0 3rd)	VBASE = Primary auxiliary voltage of the STATOR GROUND SOURCE (G60, M60)
STATOR GROUND RESISTANCE	RBASE = 10 KΩ (G60)

Unit	Description
STATOR GROUND SUB-HARMONIC VOLTAGE	VBASE = nominal secondary voltage of auxiliary VT for the stator ground source (G60)
STATOR GROUND SUB-HARMONIC CURRENT	IBASE = ground CT primary current of stator ground source (G60)
STATOR RESTRAINING CURRENT (Stator Diff Iad, Ibd, and Icd)	IBASE = maximum primary RMS value of the +IN and –IN inputs (CT primary for source currents, and bus reference primary current for bus differential currents) (G60, M60)
SYNCHROCHECK (Max Delta Volts)	VBASE = maximum primary RMS value of all the sources related to the +IN and –IN inputs (B30, C60, C95, D30, D60, F60, G30, G60, L30, L60, L90, N60, T60)
THERMAL MODEL (Model Capacity Used) (Model Motor Unbalance)	BASE = 100% (M60)
THERMAL MODEL (Model Lockout Time)	BASE = 10 minutes (M60)
THERMAL MODEL (Thermal Model Load) (Biased Motor Load)	BASE = 1.00 pu of FLA (M60)
THERMAL MODEL (Trip Time on Overload)	BASE = 10 seconds (M60)
THRU FLT x TOT ACC A THRU FLT x TOT ACC B THRU FLT x TOT ACC C Transformer total thermal/mechanical damage	BASE = 1.00 pu (T35, T60)
VOLTS PER HERTZ	BASE = 1.00 pu (G30, G60, L90, T60)
XFMR DIFFERENTIAL CURRENT (Xfmr Iad, Ibd, and Icd Mag)	IBASE = maximum primary RMS value of the +IN and -IN inputs (CT primary for source currents, and transformer reference primary current for transformer differential currents) (G30, T35, T60)
XFMR VOLTAGE COMPENSATED DIFFERENTIAL CURRENT (Intturn# Cmp Iad Mag, Intturn# Cmp IBd Mag and Intturn# Cmp Icd Mag)	IBASE = maximum primary RMS value of the +IN and -IN inputs (CT primary for source currents, and transformer reference primary current for transformer differential currents) (T35, T60)
XFMR RAW DIFFERENTIAL CURRENT (Intturn# Raw Iad Mag, Intturn# Raw IBd Mag and Intturn# Raw Icd Mag)	IBASE = maximum primary RMS value of the +IN and -IN inputs (CT primary for source currents, and transformer reference primary current for transformer differential currents) (T35, T60)
INTERTURN FAULT DETECTION COEFFICENTS (Intturn# Coef Ka Mag, Intturn# Coef Kb Mag, Intturn# Coef Kc Mag)	BASE=0.1 (T35, T60)
XFMR DIFFERENTIAL HARMONIC CONTENT (Xfmr Harm2 Iad, Ibd, and Icd Mag) (Xfmr Harm5 Iad, Ibd, and Icd Mag)	BASE = 10% (G30, T35, T60)
XFMR RESTRAINING CURRENT (Xfmr Iar, Ibr, and Icr Mag)	IBASE = maximum primary RMS value of the +IN and -IN inputs (CT primary for source currents, and transformer reference primary current for transformer differential currents) (G30, T35, T60)

Unit	Description
ZBASE	ZBASE = PhaseVTSecondary / PhaseCTSecondary, where PhaseVTSecondary and PhaseCTSecondary are the secondary nominal voltage and the secondary nominal current of the distance source. In case multiple CT inputs are summed as one source current and mapped as the distance source, use the PhaseCTSecondary value from the CT with the highest primary nominal current. Distance source is specified in setting under SETTINGS > GROUPED ELEMENTS > SETTING GROUP 1(6) > DISTANCE. PhaseVTSecondary and PhaseCTSecondary are specified in setting under SETTINGS ðò SYSTEM SETUP ðò AC INPUTS. (D30, D60, G60, L60, L90, T60)

CHAPTER 6

CYBERSECURITY

6.1 CHAPTER OVERVIEW

This chapter contains the following sections:

Chapter Overview 264
Cybersecurity overview 265
Security setup 266
IEC62351-9 Encryption for R-GOOSE messages 291
RADIUS server configuration 318

6.2 CYBERSECURITY OVERVIEW

The UR family of products are digital devices designed to be installed and operated in utility substations & industrial plant environments and connected to secure private networks. UR relays should not be connected to the public internet.

We strongly recommend that you protect your digital devices using a *defense-in-depth* strategy. This will protect your products, your network, your systems and your interfaces against cybersecurity threats. This includes, but is not limited to:

- Locating your digital devices inside the control system network security perimeter
- Deploying and maintaining access controls
- Monitoring and Intrusion Detection
- Security awareness training of security policies
- Network segmentation
- Firewalls installation
- Strong and active password management
- Data encryption
- Antivirus protection

UR relays are available with an optional software option (CyberSentry), which provides additional cybersecurity mechanisms to help you protect against cybersecurity intrusion. We strongly recommend that you use this "CyberSentry" option.

For additional details and recommendations on how to protect your relays, please read this chapter and implement the principles outlined. From time to time, we may issue additional instructions and recommendations relating to the products and other cybersecurity threats or vulnerabilities.

As a customer of GE Vernova, it is YOUR sole responsibility to make sure that your UR relays are installed and operated in accordance with its cybersecurity capabilities, the security context, and the instructions and recommendations provided. Users assume all risks and liability associated with damages or losses incurred in connection with any and all cybersecurity incidences.

6.3 SECURITY SETUP

The following security features are available:

- **Password security** — Basic security present by default
- **EnerVista security** — Role-based access to various EnerVista software screens and configuration elements. The feature is present by default in the EnerVista software.
- **CyberSentry security** — Advanced security available using a software option. When purchased, the option is enabled automatically, and the default Password security and EnerVista security are disabled.

To maximize security, see the UR Family Secure Deployment Guide.

6.3.1 PASSWORD SECURITY

Password security is a basic security feature present by default. Two levels of password security are provided: command and setting. Use of a password for each level controls whether all users can enter commands and/or change settings. Two types of connection security are provided: password entry from local or remote connection. Local access is defined as access to settings or commands via the front panel interface. This includes both keypad entry and the through a front panel port. Remote access is defined as access to settings or commands via any rear communications port. This includes both Ethernet and RS485 connections. These two settings are on by default and apply to all users. When entering a settings or command password via EnerVista or any serial interface, the user must enter the corresponding connection password. If the connection is to the back of the relay, the remote password is used. If the connection is to a front panel port, the local password applies. (These two local and remote password settings are not shown in the figure.)

Password access events are logged in the Event Recorder.

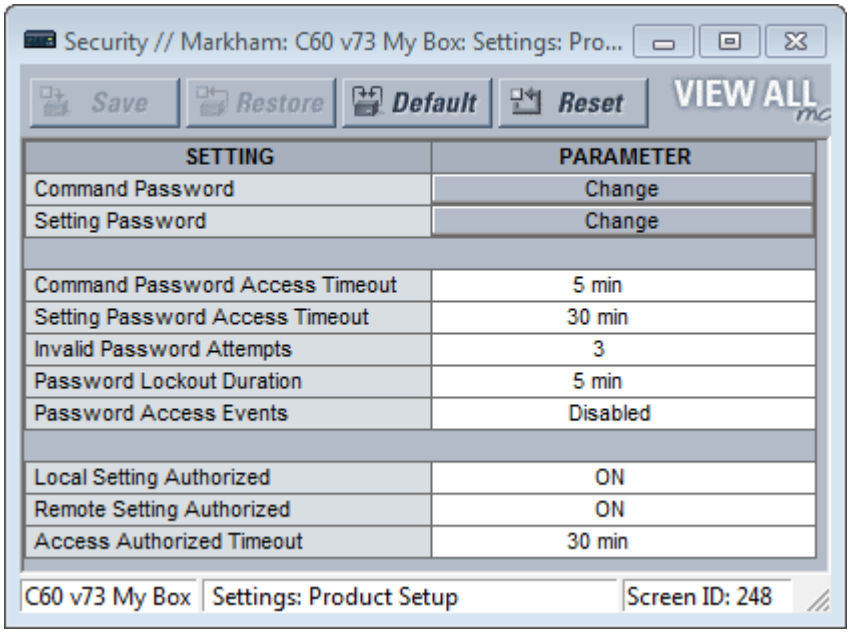

Figure 170: Password security

Lost password

If all passwords are lost, reset the unit to default values. Follow the instructions outlined later for:

COMMANDS > RELAY MAINTENANCE > SERVICE COMMAND

> *Note:*
> *The entire relay is reset to default values, not just the passwords.*

Then change the CyberSentry password as described in the Set Up CyberSentry and Change Default Password section at the end of the Installation chapter.

Password requirements

A user account requires an alpha-numeric password that meets the following requirements:

- Password is case-sensitive
- Password cannot contain the user account name or parts of the user account that exceed two consecutive characters
- Password must be 8 to 20 characters in length
- Password must contain characters from all of the following categories:
  - English uppercase characters (A through Z)
  - English lowercase characters (a through z)
  - Base 10 digits (0 through 9)
  - Non-alphabetic characters (for example, ~, !, @, #, $,%, &)

6.3.1.1 PASSWORD SECURITY SETTINGS

Setting path: ***SETTINGS > PRODUCT SETUP > SECURITY***

■ SECURITY ■	⇔	ACCESS LEVEL: Restricted	Range: Restricted, Command, Setting, Factory Service (for factory use only)
	⇕	■ CHANGE LOCAL ■ PASSWORDS	
	⇔	■ CHANGE REMOTE ■ PASSWORDS	
	⇕	■ ACCESS ■ SUPERVISION	
	⇕	■ DUAL PERMISSION ■ SECURITY ACCESS	
	⇧	PASSWORD ACCESS EVENTS: Disabled	Range: Disabled, Enabled

The relay supports password entry from either a local or remote connection.

Local access is defined as access to settings or commands via the front panel. This includes both keypad entry and the RS232 port. Remote access is defined as access to settings or commands via any rear communications port. This includes both Ethernet and RS485 connections. Any change to the local or remote password enables this functionality.

> *Note:*
> *For a relay without CyberSentry, ANY user can activate the RESET button or Reset/Acknowledge an alarm in the Graphical Front Panel Annunciator without password entry.*

The security menu has the following settings:

- ***ACCESS LEVEL***
- ***PASSWORD ACCESS EVENTS***

ACCESS LEVEL

This setting is viewable on the front panel. The Setting and Command passwords can be changed in the EnerVista interface.

The "Restricted" option means that settings and commands can be accessed, but there is no access to factory configuration. Access automatically reverts to the Restricted level according to the ACCESS LEVEL TIMEOUTS values. The access level is set to Restricted when control power is cycled. The "Factory Service" level is for factory functions.

There are two user security access levels, setting and command, for which you can set a password for each. Use of a password for each level controls whether users can enter commands or change settings. Another option is to specify setting and/or command access for individual user accounts.

- Setting — Allows the user to make any changes to any of the setting values:
  - Change any setting
  - Test mode operation
- Command — Restricts the user from making any settings changes, but allows the user to perform the following operations:
  - Operate the breakers via front panel keypad (not all UR models)
  - Change the state of virtual inputs
  - Clear the event records
  - Clear the oscillography records
  - Clear fault reports
  - Change the date and time
  - Clear the breaker arcing current
  - Clear energy records
  - Clear the data logger
  - Clear the user-programmable pushbutton states

When entering a settings or command password via EnerVista or any serial interface, you must enter the corresponding connection password. If the connection is to the back of the relay, use the remote password. If the connection is to the RS232 port of the front panel, use the local password.

The local setting and command sessions are initiated by the user through the front panel display and are disabled either by the user or by timeout (via the setting and command level access timeout settings). The remote setting and command sessions are initiated through the EnerVista software and are disabled either by the user or by timeout.

The state of the session (local or remote, setting or command) determines the state of the following FlexLogic operands:

- ACCESS LOC SETG OFF — Asserted when local setting access is disabled
- ACCESS LOC SETG ON — Asserted when local setting access is enabled
- ACCESS LOC CMND OFF — Asserted when local command access is disabled
- ACCESS LOC CMND ON — Asserted when local command access is enabled
- ACCESS REM SETG OFF — Asserted when remote setting access is disabled
- ACCESS REM SETG ON — Asserted when remote setting access is enabled
- ACCESS REM CMND OFF — Asserted when remote command access is disabled
- ACCESS REM CMND ON — Asserted when remote command access is enabled

Note:
A command or setting write operation is required to update the state of the remote and local security operands listed.

Note:
When a setting password or command password is set or updated, user access with a graphical front panel is removed. Simply log in again on the graphical front panel.

Note:
When the setting password is set or updated, the graphical front panel Access Level displays as Command. This is because the graphical front panel is a Modbus client and it does not have automatic access to the password change.

PASSWORD ACCESS EVENTS

This setting allows recording of password access events in the event recorder.

The security menu has the following sub-menus:

- ***CHANGE LOCAL PASSWORDS***
- ***CHANGE REMOTE PASSWORDS***
- ***ACCESS SUPERVISION***
- ***DUAL PERMISSION SECURITY ACCESS***

These sub-menus are described in the subsequent sections.

6.3.1.1.1 CHANGE LOCAL PASSWORDS SETTING

Setting path: *SETTINGS > PRODUCT SETUP > SECURITY > CHANGE LOCAL PASSWORDS*

■ CHANGE LOCAL ■ PASSWORDS	⇔	CHANGE SETTING PASSWORD: No	Range: No, Yes
	⇧	■ CHANGE COMMAND ■ PASSWORD: No	Range: No, Yes

There are two user security access levels, setting and command. Use of a password for each level controls whether users can enter commands or change settings. Proper password codes are required to enable each access level. When a CHANGE COMMAND PASSWORD or CHANGE SETTING PASSWORD setting is SET to “Yes” via the front panel interface, the following message sequence is shown:

1. ENTER NEW PASSWORD:
2. VERIFY NEW PASSWORD:
3. NEW PASSWORD HAS BEEN STORED.

To gain write access to a restricted setting, program the ACCESS LEVEL setting in the main security menu to `Setting` and then change the setting, or attempt to change the setting and follow the prompt to enter the programmed password. If the password is correctly entered, access is allowed. Access automatically reverts to the restricted level according to the access level timeout setting values and when power is cycled.

6.3.1.1.2 CHANGE REMOTE PASSWORDS SETTING

Setting path: ***SETTINGS > PRODUCT SETUP > SECURITY > CHANGE REMOTE PASSWORDS***

■ CHANGE REMOTE ■ PASSWORDS	⇔	CHANGE SETTING PASSWORD: No	Range: No, Yes
	⇧	■ CHANGE COMMAND ■ PASSWORD: No	Range: No, Yes

To set the command or setting password in EnerVista:

1. In the EnerVista software or from the front panel, navigate to **Settings > Product Setup > Security** menu item to open the remote password settings window.
2. Click the command or setting password **Change** button.
3. Enter the new password in the **New Password** field.
4. Re-enter the password in the **Confirm Password** field
5. Click **OK** to confirm. The password is checked to ensure that it meets requirements.

> *Note:*
> *If you establish a local (serial) connection to the relay, you cannot view remote passwords*

6.3.1.1.3 ACCESS SUPERVISION SETTING

Setting path: ***SETTINGS > PRODUCT SETUP > SECURITY > ACCESS SUPERVISION***

■ ACCESS ■ SUPERVISION	⇔	■ ACCESS LEVEL ■ TIMEOUTS	
	⇩	INVALID ATTEMPTS BEFORE LOCKOUT: 3	Range: 2 to 5 in steps of 1
	⇩	PASSWORD LOCKOUT DURATION: 5 min	Range: 5 to 60 minutes in steps of 1
	⇩	FACTORY SERVICE MODE: Disabled	Range: Enabled, Disabled
	⇧	LOCK FIRMWARE: Enabled	Range: Enabled, Disabled

This menu displays when the ACCESS LEVEL setting is set to anything other than `Restricted` or `Command`.

The ACCESS SUPERVISION menu has the following settings:

- INVALID ATTEMPTS BEFORE LOCKOUT
- PASSWORD LOCKOUT DURATION
- FACTORY SERVICE MODE
- LOCK FIRMWARE

The following access settings are available.

INVALID ATTEMPTS BEFORE LOCKOUT

This setting specifies the number of times that an incorrect password can be entered within three minutes before lockout occurs. When lockout occurs, the LOCAL ACCESS DENIED or REMOTE ACCESS DENIED FlexLogic operands are turned to the `On` state. These operands `Off` state after the lockout has expired.

PASSWORD LOCKOUT DURATION

This setting specifies the time that the relay locks out password access after the number of invalid password entries specified by the INVALID ATTEMPTS BEFORE LOCKOUT setting.

The relay provides a means to raise an alarm upon failed password entry. If password verification fails while accessing a password-protected level of the relay (either settings or commands), the UNAUTHORIZED ACCESS FlexLogic operand is asserted. The operand can be programmed to raise an alarm via contact outputs or communications. This feature can be used to protect against both unauthorized and accidental access attempts.

The UNAUTHORIZED ACCESS operand is reset with the COMMANDS > CLEAR RECORDS > RESET UNAUTHORIZED ALARMS command. Therefore, to apply this feature with security, password-protect the Command level. The operand does not generate events or targets.

If events or targets are required, the UNAUTHORIZED ACCESS operand can be assigned to a digital element programmed with event logs or targets enabled.

FACTORY SERVICE MODE

A factory service user is supported to perform additional operations intended only for them. This setting allows access by GE support staff to be turned on and off. A factory service user can log in only when this setting is configured as Enabled. It is disabled by default. When Enabled, the relay logs events and activates the TROUBLE LED.

GE recommends that Factory Service Mode be disabled when factory operations are not intended to be performed. The TROUBLE LED de-activates when a user disables Factory Service Mode.

Login is required for this user, and the password is unique for each relay.

A factory service user is logged out with any of the following circumstances:

- UR restarts
- FACTORY SERVICE MODE setting is disabled by Administrator or factory service user
- ACCESS LEVEL setting is changed from "Factory Service" via front panel or serial connection

LOCK FIRMWARE

This setting determines whether the device accepts or blocks a firmware upgrade. When disabled, firmware can be updated. When enabled, the firmware cannot be updated. When Enabled/locked and a firmware upgrade is attempted using the software, the UNAUTH FW ATTEMPT FlexLogic operand does not assert. When locked and a firmware upgrade is attempted without using the software, the operand asserts. A user with an Access Level of "Settings" can modify this setting.

The ACCESS SUPERVISION menu also has an ACCESS LEVEL TIMEOUTS sub-menu containing the following settings

COMMAND LEVEL ACCESS TIMEOUT

This setting specifies the length of inactivity (no local or remote access) required to return to restricted access from the Command password level.

> *Note:*
> *The access level is set to* `Restricted` *when control power is cycled*

SETTING LEVEL ACCESS TIMEOUT

This setting specifies the length of inactivity (no local or remote access) required to return to restricted access from the Settings password level.

> *Note:*
> *The access level is set to* `Restricted` *when control power is cycled*

6.3.1.1.4 DUAL PERMISSION SECURITY ACCESS

Setting path: ***SETTINGS > PRODUCT SETUP > SECURITY > DUAL PERMISSION SECURITY ACCESS***

■ DUAL PERMISSION ■ SECURITY ACCESS	⇔	LOCAL SETTING AUTH: On	Range: selected FlexLogic operands
	⇕	REMOTE SETTING AUTH: On	Range: FlexLogic operand
	⇧	ACCESS AUTH TIMEOUT: 30 min	Range: 5 to 480 minutes in steps of 1

This menu displays when the ACCESS LEVEL setting is other than `Restricted` or `Command`. This feature provides a mechanism to prevent unauthorized or unintended upload of settings to a relay through the local or remote interface. The following settings are available through the local (front panel) interface only.

The DUAL PERMISSION SECURITY ACCESS menu has the following settings:

- LOCAL SETTING AUTH
- REMOTE SETTING AUTH
- ACCESS AUTH TIMEOUT

LOCAL SETTING AUTH

This setting is used for local (front panel or RS232 interface) setting access supervision. Valid values for the FlexLogic operands are either “On” (default) or any physical “Contact Input ~~ On” value. If this setting is “On,“ then local setting access functions as normal; that is, a local setting password is required. If this setting is any contact input on FlexLogic operand, then the operand must be asserted (on) prior to providing the local setting password to gain setting access.

If setting access is not authorized for local operation (front panel or RS232 interface) and the user attempts to obtain setting access, then the UNAUTHORIZED ACCESS message displays on the front panel.

If this setting is Off, firmware upgrades are blocked. If this setting is On, firmware upgrades are allowed.

REMOTE SETTING AUTH

This setting is used for remote (Ethernet or RS485 interface) setting access supervision.

If this setting is “On” (the default setting), then remote setting access functions as normal; that is, a remote password is required. If this setting is “Off,” then remote setting access is blocked even if the correct remote setting password is provided. If this setting is any other FlexLogic operand, then the operand must be asserted (set as on) prior to providing the remote setting password to gain setting access.

If this setting is "Off," firmware upgrades are blocked. If this setting is "On," firmware upgrades are allowed.

ACCESS AUTH TIMEOUT

This setting represents the timeout delay for local setting access. This setting is applicable when the LOCAL SETTING AUTH setting is programmed to any operand except “On.” The state of the FlexLogic operand is monitored continuously for an off-to-on transition. When this occurs, local access is permitted and the timer programmed with the ACCESS AUTH TIMEOUT setting value is started. When this timer expires, local setting access is immediately denied. If access is permitted and an off-to-on transition of the FlexLogic operand is detected, the timeout is restarted. The status of this timer updates every five seconds.

The following settings are available through the remote (EnerVista UR Setup) interface only. Select the **Settings > Product Setup > Security** menu item to display the security settings window.

The ***Remote Settings Authorized*** setting is used for remote (Ethernet or RS485 interface) setting access supervision. If this setting is “On” (the default setting), then remote setting access functions as normal; that is, a

remote password is required. If this setting is “Off,” then remote setting access is blocked even if the correct remote setting password is provided. If this setting is any other FlexLogic operand, then the operand must be asserted (on) prior to providing the remote setting password to gain setting access.

The ***Access Authorized Timeout*** setting represents the timeout delay remote setting access. It applies when the Remote Settings Authorized setting is programmed to any operand except “On” or “Off.” The state of the FlexLogic operand is continuously monitored for an off-to-on transition. When this occurs, remote setting access is permitted, and the timer programmed with the Access Authorized Timeout setting value is started. When this timer expires, remote setting access is denied immediately. If access is permitted and an off-to-on transition of the FlexLogic operand is detected, the timeout is restarted. The status of this timer updates every five seconds.

6.3.2 ENERVISTA SECURITY

The EnerVista security management system is a role-based access control (RBAC) system that allows an administrator to manage the privileges of multiple users. This allows for access control of UR devices by multiple personnel within a substation and conforms to the principles of RBAC as defined in ANSI INCITS 359-2004. The EnerVista security management system is disabled by default to allow the administrator direct access to the EnerVista software after installation. It is recommended that security be enabled before placing the device in service.

Basic password or enhanced CyberSentry security applies, depending on purchase.

6.3.3 CYBERSENTRY SECURITY

CyberSentry is a software option, specified at the time of ordering. It provides advanced security features, which are not available in the standard product. When the option is purchased, the basic password security is disabled automatically. CyberSentry provides security through the following features:

- An Authentication, Authorization, Accounting (AAA) Remote Authentication Dial-In User Service (RADIUS) client that is managed centrally, enables user attribution, provides accounting of all user activities, and uses secure standards-based strong cryptography for authentication and credential protection. In other words, this option uses a RADIUS server for user authentication.
- A Role-Based Access Control (RBAC) system that provides a permission model that allows access to UR device operations and configurations based on specific roles and individual user accounts configured on the AAA server. That is, Administrator, Supervisor, Engineer, Operator, and Observer roles are used. There is no login required for the Observer role.
- Security event reporting through the Syslog protocol for supporting Security Information Event Management (SIEM) systems for centralized cybersecurity monitoring.
- Strong encryption of all access and configuration network messages between the EnerVista software and UR devices using the Secure Shell (SSH) protocol, the Advanced Encryption Standard (AES), and 128-bit keys in Galois Counter Mode (GCM) as specified in the U.S. National Security Agency Suite B extension for SSH and approved by the National Institute of Standards and Technology (NIST) FIPS-140-2 standards for cryptographic systems.
- Authentication and encryption of machine-to-machine (M2M) traffic, as described in IEC 62351-9. This option requires the CyberSentry level 2 order code.

The EnerVista software provides the means to configure and authenticate the relay access using either a server or the device. Access to functions depends on user role. The login screen of EnerVista has two options:

- Server authentication
- Device authentication.

When the server authentication is selected, the relay uses the RADIUS server and not its local authentication database to authenticate the user.

When the device authentication is selected, the relay uses its local authentication database and not the RADIUS server to authenticate the user. In this case, it uses built-in roles as login accounts and the associated passwords are stored on the relay. In this case, access is not user-attributable. In cases where user-attributable access is required, especially for auditable processes for compliance reasons, use server authentication (RADIUS) only.

No password or security information is displayed in plain text by the EnerVista software or the UR device, nor are they ever transmitted without cryptographic protection.

> *Note:*
> *Only (TCP/UDP) ports and services that are needed for device configuration and for customer enabled features are open. All the other ports are closed. For example, Modbus is on by default, so its TCP port 502, is open. But if Modbus is disabled, port 502 is closed. This function has been tested and no unused ports have been found open.*

When CyberSentry is enabled, Modbus communications over Ethernet is encrypted for all roles but for the Observer. The built-in Observer role has read-only access to data over Modbus over Ethernet without authentication. Encrypted Modbus communication over Ethernet is not always tolerated by SCADA systems. The UR has a bypass access feature for such situations, which allows unencrypted Modbus over Ethernet. The Bypass Access setting is available on the ***SETTINGS > PRODUCT SETUP > SECURITY > SUPERVISORY*** screen. Note that other protocols (DNP, 101, 103, 104, EGD) are not encrypted, and they are good communications options for SCADA systems when CyberSentry is enabled.

When using the rear RS485 port and CyberSentry, registers can be read with a maximum buffer of 64 bytes. Settings may not be written, so use another port or configure the ***SERIAL INACTIVITY TIMEOUT*** setting to a high value, such as eight minutes, to give the relay enough time to finish the task.

6.3.3.1 CYBERSENTRY USER ROLES

CyberSentry user roles (Administrator, Supervisor, Engineer, Operator, Observer) limit the levels of access to various UR functions. This means that the EnerVista software allows for access to functionality based on the user's logged in role.

Example: Administrative functions can be segmented from common operator functions, or engineering type access, all of which are defined by separate roles so that access of UR devices by multiple personnel within a substation is allowed.

One role of one type is allowed to be logged in at a time. For example, one Operator can be logged in but not a second Operator at the same time. This prevents subsets of settings from being changed at the same time.

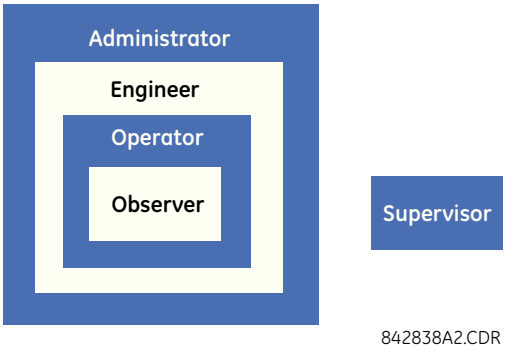

Figure 171: Cybersentry user roles

The following table lists user roles and permissions.

			Administrator	Engineer	Operator	Supervisor	Observer
Summary			Complete access	Complete access except for CyberSentry Security	Command menu	Authorizes writing	Default role
Device Definition			R	R	R	R	R
Settings							
|---------	Product Setup						

			Administrator	Engineer	Operator	Supervisor	Observer
	|----------	Security (CyberSentry)	RW	R	R	R	R
	|----------	Supervisory	See table notes	R	R	See table notes	R
	|----------	Display Properties	RW	RW	R	R	R
	|----------	Clear Relay Records (settings)	RW	RW	R	R	R
	|----------	Communications	RW	RW	R	R	R
	|----------	Modbus User Map	RW	RW	R	R	R
	|----------	Real Time Clock	RW	RW	R	R	R
	|----------	Oscillography	RW	RW	R	R	R
	|----------	Data Logger	RW	RW	R	R	R
	|----------	Demand	RW	RW	R	R	R
	|----------	User-Programmable LEDs	RW	RW	R	R	R
	|----------	User-Programmable Self Tests	RW	RW	R	R	R
	|----------	Control Pushbuttons	RW	RW	R	R	R
	|----------	User-Programmable Pushbuttons	RW	RW	R	R	R
	|----------	Flex state Parameters	RW	RW	R	R	R
	|----------	User-Definable Displays	RW	RW	R	R	R
	|----------	Direct I/O	RW	RW	R	R	R
	|----------	Teleprotection	RW	RW	R	R	R
	|----------	Installation	RW	RW	R	R	R
|----------	System Setup		RW	RW	R	R	R
|----------	FlexLogic		RW	RW	R	R	R
|----------	Grouped Elements		RW	RW	R	R	R
|----------	Control Elements		RW	RW	R	R	R
|----------	Inputs / Outputs		RW	RW	R	R	R
	|----------	Contact Inputs	RW	RW	R	R	R
	|----------	Contact Input threshold	RW	RW	R	R	R
	|----------	Virtual Inputs	RW	RW	R	R	R
	|----------	Contact Outputs	RW	RW	R	R	R
	|----------	Virtual Outputs	RW	RW	R	R	R
	|----------	Resetting	RW	RW	R	R	R
	|----------	Direct Inputs	RW	RW	R	R	R
	|----------	Direct Outputs	RW	RW	R	R	R
	|----------	Teleprotection	RW	RW	R	R	R
	|----------	Direct Analogs	RW	RW	R	R	R
	|----------	Direct Integers	RW	RW	R	R	R
|----------	Transducer I/O		RW	RW	R	R	R
|----------	Testing		RW	RW	R	R	R
|----------	Front Panel Label Designer		NA	NA	NA	NA	NA
|----------	Protection Summary		NA	NA	NA	NA	NA
Commands			RW	RW	RW	R	R

			Administrator	Engineer	Operator	Supervisor	Observer
|----------	Virtual Inputs		RW	RW	RW	R	R
|----------	Clear Records		RW	RW	RW	R	R
|----------	Set Date and Time		RW	RW	RW	R	R
User Displays			R	R	R	R	R
Targets			R	R	R	R	R
Actual Values			R	R	R	R	R
|----------	Front Panel		R	R	R	R	R
|----------	Status		R	R	R	R	R
|----------	Metering		R	R	R	R	R
|----------	Transducer I/O		R	R	R	R	R
|----------	Records		R	R	R	R	R
|----------	Product Info		R	R	R	R	R
Maintenance			RW	RW	R	R	R
|----------	Modbus Analyzer		NA	NA	NA	NA	NA
|----------	Change front panel		RW	RW	RW	R	R
|----------	Update firmware		Yes	No	No	No	No

Table Notes:

- RW = read and write access
- R = read access
- Supervisor = RW (default), Administrator = R (default), Administrator = RW (only if Supervisor role is disabled)
- NA = the permission is not enforced by CyberSentry security

6.3.3.2 CYBERSENTRY SETTINGS THROUGH ENERVISTA

CyberSentry security settings are configured under **Settings > Product Setup > Security**.

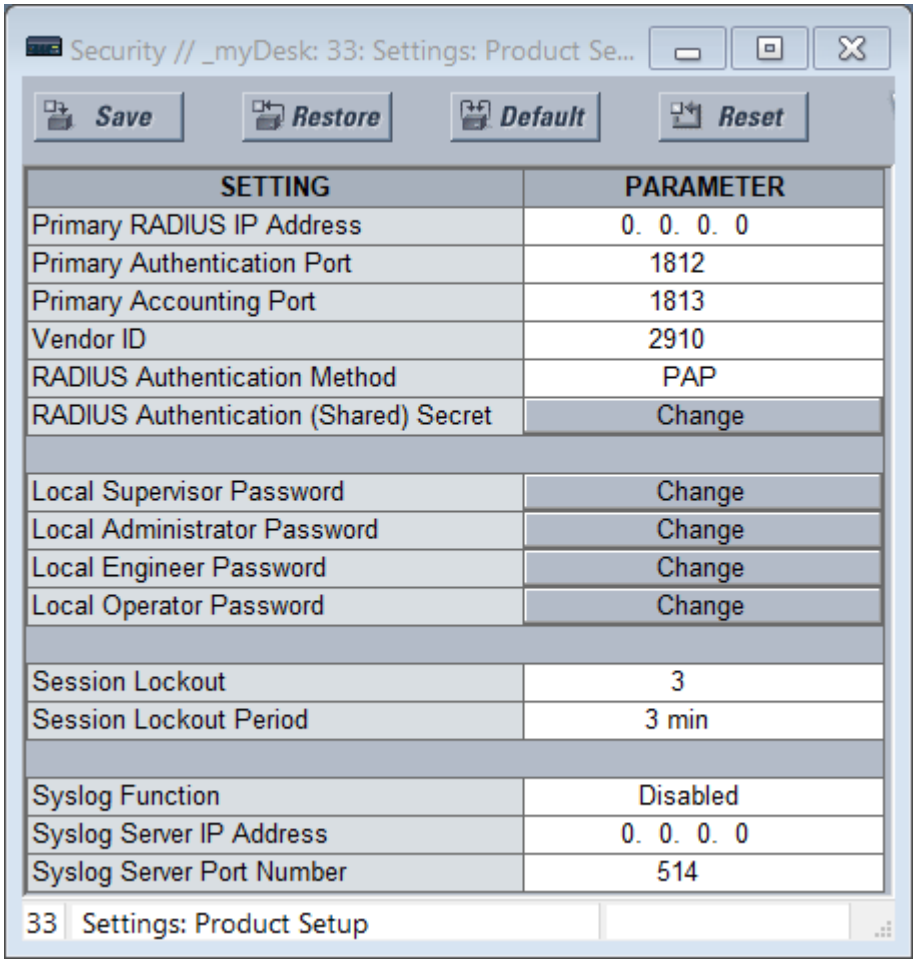

Figure 172: Security panel when CyberSentry installed

For the **Device > Settings > Product Setup > Supervisory** option, the panel looks like the following.

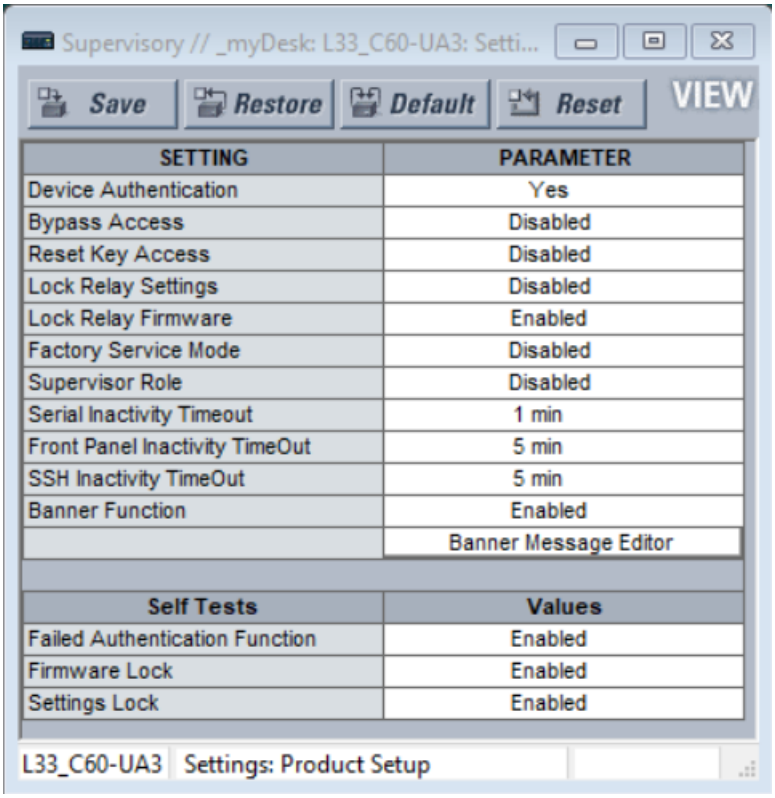

Figure 173: Supervisory panel

For the Security panel, the following settings are available:

Radius server settings

Setting name	Description	Minimum	Maximum	Default	Units	Minimum permission
Primary RADIUS IP Address	IP address of the main RADIUS server. Default value indicates no Primary RADIUS server is configured, and hence RADIUS is disabled. Restart the relay for any change to take effect.	0.0.0.0	223.255.255.254	0.0.0.0	-	Administrator
Primary Authentication Port	RADIUS authentication port	1	65535	1812	-	Administrator
Primary Accounting Port	RADIUS accounting port	1	65535	1813	-	Administrator
Vendor ID	An identifier that specifies RADIUS vendor-specific attributes used with the protocol			Value that represents GE Vernova		Administrator
RADIUS Authentication Method	Authentication method used by RADIUS server	EAP-TTLS	PAP	EAP-TTLS	-	Administrator
RADIUS Authentication (Shared) Secret	Shared secret used in authentication. It displays as asterisks. This setting must meet the CyberSentry password requirements.	See the Password Requirements section earlier in this chapter	See the following password section for requirements	N/A	-	Administrator

Setting name	Description	Minimum	Maximum	Default	Units	Minimum permission
Confirm RADIUS Authentication (Shared) Secret	Confirmation of the shared secret. The entry displays as asterisks.	See the Password Requirements section	245 characters	N/A	-	Administrator

General security settings

Setting name	Description	Minimum	Maximum	Default	Units	Minimum permission
Session Lockout	Number of failed authentications before the device blocks subsequent authentication attempts for the lockout period	0 (lockout disabled)	99	3	-	Administrator
Session Lockout Period	The period in minutes that a user is prevented from logging in after being locked out	0 (no period)	9999	3	min	Administrator
Device Authentication	When enabled, local Device authentication with roles is allowed. When disabled, the UR only authenticates to the AAA server (RADIUS). NOTE: Administrator and Supervisor (if still enabled) remain active even after Device authentication is disabled. The only permission for local Administrator is to re-enable Device authentication when Device authentication is disabled. To re-enable Device authentication, the Supervisor unlocks the device for setting changes, and then the Administrator can re-enable Device authentication.	Disabled	Enabled	Enabled	-	Administrator
Factory Service Mode	When enabled, the device can go into factory service mode. To enable, Supervisor authentication is necessary.	Disabled	Enabled	Disabled	-	Supervisor (Administrator when Supervisor is disabled)
Lock Settings	When disabled, the device allows modification of settings. To enable, Supervisor authentication is necessary.	Disabled	Enabled	Disabled	-	Supervisor (Administrator when Supervisor is disabled)
Lock Firmware	When enabled, the device denies firmware upload. To change setting, Supervisor authentication is necessary.	Disabled	Enabled	Disabled	-	Supervisor (Administrator when Supervisor is disabled)
Restore to Defaults	Sets the device to factory defaults	No	Yes	No	-	Administrator
Supervisor Role	When enabled, the Supervisor role is active. To enable, Administrator authentication is necessary. When disabled, the Supervisor role is inactive. To disable, Supervisor authentication is necessary.	Disabled	Enabled	Enabled	-	Administrator to enable and Supervisor to disable
RADIUS user names	Ensures that RADIUS user names are not the same as local/device role names	See RADIUS server documents	See RADIUS server documents		-	Administrator
Password	Local/device roles except for Observer are password-protected. All RADIUS users are password-protected.	See the Password Requirements section earlier in this chapter	See the following password section for requirements	Change Me1#	Text	The specified role and Administrator, except for Supervisor, where it is only itself

Security alarm settings

Setting name	Description / Details	Min	Max	Default	Units	Minimum permissions
Failed Authentications	A threshold number indicating when an alarm is set off to indicate too many failed authentication attempts	Disabled	Enabled	Enabled	-	Administrator
Firmware Lock	A value indicating if the device can receive a firmware upgrade. If Enabled and a firmware upgrade attempt is made, the device alarm activates. If Disabled, the device alarm does not activate. On each firmware upgrade this setting goes back to the default.	Disabled	Enabled	Enabled	-	Administrator
Settings Lock	A value indicating if the device can accept any settings changes. If Enabled and a settings change attempt is made, the device alarm activates. If Disabled, the device alarm does not activate.	Disabled	Enabled	Enabled	-	Supervisor (Administrator if Supervisor has been disabled)

6.3.3.3 CYBERSENTRY AUTHENTICATION

The following types of authentication are supported by CyberSentry to access the UR device:

- Device Authentication (local UR device authenticates)
- Server Authentication (RADIUS server authenticates

User authentication

The EnerVista software allows access to functionality that is determined by the user role, which comes either from the local UR device or the RADIUS server.

The EnerVista software has a device authentication option on the login screen for accessing the UR device. When the "Device" button is selected, the UR uses its local authentication database and not the RADIUS server to authenticate the user. In this case, it uses its built-in roles (Administrator, Engineer, Supervisor, Observer, Operator, or Administrator and Supervisor when Device Authentication is disabled) as login names and the associated passwords are stored on the UR device. As such, when using the local accounts, access is not user-attributable.

In cases where user-attributable access is required especially to facilitate auditable processes for compliance reasons, use RADIUS authentication.

When the "Server" Authentication Type option is selected, the UR uses the RADIUS server and not its local authentication database to authenticate the user.

No password or security information is displayed in plain text by the EnerVista software or UR device, nor is such information ever transmitted without cryptographic protection.

Server authentication

The UR has been designed to direct automatically the authentication requests based on user names. In this respect, local account names on the UR are considered as reserved and not used on a RADIUS server.

The UR detects automatically whether an authentication request is to be handled remotely or locally. As there are five local accounts possible on the UR, if the user ID credential does not match one of the five local accounts, the UR forwards automatically the request to a RADIUS server when one is provided.

If a RADIUS server is provided, but is unreachable over the network, server authentication requests are denied. In this situation, use local UR accounts to gain access to the UR system.

SSH Server Authentication:

From 8.60 onwards the URPC supports Server authentication functionality. In SSH communication, the EnerVista UR setup software is the client and the UR relay is the SSH server.

6.3.3.4 CYBERSENTRY SETTINGS THROUGH THE FRONT PANEL

Setting path: ***SETTINGS > PRODUCT SETUP > SECURITY***

■ SECURITY ■	⇔	LOGIN: None	Range: Administrator, Supervisor, Engineer, Operator, Factory (for factory use only), None
	⇕	■ CHANGE DEVICE ■ PASSWORD	
	⇕	■ SESSION ■ SETTINGS	
	⇕	■ RESTORE DEFAULTS ■	
	⇕	■ SYSLOG ■ SETTINGS	
	⇑	■ SUPERVISORY ■	

LOGIN setting

This setting is applicable for Device authentication only. This setting allows a user to log in with a specific role, as outlined here. For the Supervisor role, enable the “Supervisor Role” setting. Log out by right-clicking the device in EnerVista and selecting the **Disconnect** option.

Whenever a new role is logged in, the user is prompted to enter a password. Passwords must obey the requirements specified earlier in the chapter in the Password Requirements section.The UR device supports five roles. Roles have their corresponding passwords, except the Observer role, which does not require a password. There are no time-outs for the Administrator, Engineer, Operator, and Supervisor when logged in using the front panel; log out manually or use the **Command > Security** commands in the software.

The roles are defined as follows:

- Administrator — Complete read/write access to all settings and commands. This role does not allow concurrent access. This role has an operand to indicate when it is logged on.
- Supervisor — This is only an approving role. This role’s authentication commits setting changes submitted by Administrator or Engineer. The Supervisor role authenticates to unlock the UR relay for setting changes and not approve changes after the fact. Only a Supervisor can set the Settings Lock and Firmware Lock in the Security settings. This role also has the ability to forcefully log off any other role and clear the security event log. This role can also be disabled, but only through a Supervisor authentication. When this role is disabled its permissions are assigned to the Administrator role.
- Engineer — Complete read/write access to all settings and commands except configuring Security settings and firmware upgrades. This role does not allow concurrent access.
- Operator — The Operator has read/write access to all settings under the Commands menu/section. This role does not exist offline.
- Observer — This role has read-only access for all settings. This role allows concurrent viewing access but it has no download access to any files on the device. Observer is the default role if no authentication has been done. This role displays as `None` on the front panel. When local authentication is used, no password is required for this role. When RADIUS server authentication is used, a password is required.
- Factory — For GE Vernova service personnel only

Note:
The Local Access Denied message on the front panel can mean that you need to log in to the UR in order to complete the action.

The SECURITY menu option has the following sub-menus:

- CHANGE DEVICE PASSWORD
- SESSION SETTINGS
- RESTORE DEFAULTS
- SYSLOG SETTINGS
- SUPERVISORY

These sub-menus are described in the following sections.

6.3.3.4.1 CHANGE DEVICE PASSWORD

Setting path: *SETTINGS > PRODUCT SETUP > SECURITY > CHANGE DEVICE PASSWORD*

■ CHANGE DEVICE ■ PASSWORD	⇔	NEW PASSWORD:	Range: 20 alphanumeric characters
	⇧	CONFIRM PASSWORD:	Range: 20 alphanumeric characters

The menu displays on the front panel upon successful login of the Administrator role. Passwords are stored in salted hash format.

In Device authentication mode, the Observer role does not have a password associated with it. In Server authentication mode the Observer role requires a password.

If you are locked out of the software, reset the device to factory defaults as outlined later for COMMANDS < RELAY MAINTENANCE < SERVICE COMMAND. When using CyberSentry, the default password is `ChangeMe1`#.

Once the passwords are set, the Administrator with Supervisor approval can change the role-associated password.

6.3.3.4.2 SESSION SETTINGS

Setting path: *SETTINGS > PRODUCT SETUP > SECURITY > SESSION SETTINGS*

■ SESSION ■ SETTINGS	⇔	SESSION LOCKOUT:	Range: 20 alphanumeric characters
	⇧	SESSION LOCKOUT PERIOD:	Range: 20 alphanumeric characters

SESSION LOCKOUT setting

This setting specifies the number of failed authentications before the device blocks subsequent authentication attempts for the lockout period. A value of zero means lockout is disabled.

SESSION LOCKOUT setting

This setting specifies the period of time in minutes of a lockout period. A value of 0 means that there is no lockout period.

6.3.3.4.3 RESTORE DEFAULTS

Setting path: *SETTINGS > PRODUCT SETUP > SECURITY >RESTORE DEFAULTS*

■ SESSION ■ SETTINGS	⇔	LOAD FACTORY DEFAULTS: NoRange: Yes, No

LOAD FACTORY DEFAULTS setting

This setting is used to reset all the settings, communication, and security passwords. An Administrator role is used to change this setting and a Supervisor role (if not disabled) approves it.

6.3.3.4.4 SYSLOG SETTINGS

Setting path: *SETTINGS > PRODUCT SETUP > SECURITY >SYSLOG SETTINGS*

■ SYSLOG ■ SETTINGS	⇔	SYSLOG FUNCTION: Disable:	Range: Enable, Disable
	⇩	SYSLOG IP ADDRESS: 0.0.0.0:	Range: 0.0.0.0 to 223.255.255.255
	⇧	SYSLOG PORT NUMBER: 514	Range: 1 to 65535

SYSLOG FUNCTION setting

This setting allows the Syslog functionality to be enabled or disabled in the relay.

SYSLOG IP ADDRESS setting

The IP address of the target Syslog server to which all security events are transmitted.

SYSLOG PORT NUMBER setting

The UDP port number of the target Syslog server to which all security events are transmitted.

Date	Time	Priority	Hostname	Message
11-30-2022	15:32:51	Auth.Info	192.168.100.33	1 2022-11-30T13:02:55.58Z UR7 - - - auth[9339830]: Info: Event_Log 56, Nov 30 2022 15:32:46.878719, 840, 2, 1, 5, 0.0.0.0, 0, 1, 00FF0C75F508, GDC653T3E, , 56, Nov 30 2022 15:32:55.341216
11-30-2022	15:32:50	Auth.Info	192.168.100.33	1 2022-11-30T13:02:54.49Z UR7 - - - auth[935bfb0]: Info: Security_Log 92, Nov 30 2022 15:32:53.993304, Administrator, 10.130.42.191, 1, 15, 5
11-30-2022	15:32:42	Auth.Notice	192.168.100.33	1 2022-11-30T13:02:47.34Z UR7 - - - auth[8f7d708]: Notice: Security_Log 91, Nov 30 2022 15:32:46.878719, Administrator, 10.130.42.191, 1, 6, 5
11-30-2022	15:32:42	Auth.Info	192.168.100.33	1 2022-11-30T13:02:47.09Z UR7 - - - auth[8f7d708]: Info: Nov 30 2022 15:32:46.878719, Disabled, Local and Remote, Bypass Access, 0x332C
11-30-2022	15:32:42	Auth.Warning	192.168.100.33	1 2022-11-30T13:02:47.09Z UR7 - - - auth[8f7d708]: Warning: Security_Log 90, Nov 30 2022 15:32:46.641219, Administrator, 10.130.42.191, 1, 25, 5
11-30-2022	15:31:46	Auth.Info	192.168.100.33	1 2022-11-30T13:01:51.13Z UR7 - - - auth[935bfb0]: Info: Security_Log 89, Nov 30 2022 15:31:50.641221, Administrator, 10.130.42.191, 1, 14, 5

Figure 174: Example of the Syslog data

6.3.3.4.5 SUPERVISORY

Setting path: *SETTINGS > PRODUCT SETUP > SECURITY > SUPERVISORY*

■ SUPERVISORY ■	⇔	DEVICE AUTHENTICATION: Yes	Range: Yes, No
	⇩	BYPASS ACCESS: Disabled	Range: Local, Remote, Local and Remote, Disabled, Pushbuttons

⇕	RESET KEY ACCESS: Disabled	Range: Enabled, Disabled
⇕	FACTORY SERVICE MODE: Disabled	Range: Enabled, Disabled
⇕	■ SELF TESTS ■	
⇕	SUPERVISOR ROLE: Disabled	Range: Enabled, Disabled
⇕	SERIAL INACTIVITY TIMEOUT: 1 min	Range: 1 to 9999 minutes
⇕	FRONT PANEL INACTIVITY TIMEOUT: 5 min	Range: 2 to 60 minutes
⇕	SSH INACTIVITY TIMEOUT: 5 min	Range: 1 to 60 minutes
⇕	BANNER FUNCTION ENABLED	Range: Enabled, Disabled
⇕	LOCK SETTINGS: Disabled	Range: Enabled, Disabled
⇧	LOCK FIRMWARE: Enabled	Range: Enabled, Disabled

The Supervisory menu settings are available for Supervisor role only, or if the Supervisor role is disabled then for the Administrator role only. The following settings are available:

- DEVICE AUTHENTICATION
- BYPASS ACCESS
- RESET KEY ACCESS
- FACTORY SERVICE MODE
- SUPERVISOR ROLE
- SERIAL INACTIVITY TIMEOUT
- FRONT PANEL INACTIVITY TIMEOUT
- SSH INACTIVITY TIMEOUT
- BANNER FUNCTION
- LOCK SETTINGS
- LOCK FIRMWARE

DEVICE AUTHENTICATION setting

This setting is enabled by default, meaning "Yes" is selected. When enabled, Device authentication with roles is enabled. When this setting is disabled, the UR only authenticates to the AAA server (RADIUS). However, the Administrator and Supervisor (when enabled) remain active even after device authentication is disabled and their only permission is to re-enable Device authentication. To re-enable Device authentication, the Supervisor unlocks the device for settings changes, then the Administrator re-enables device authentication.

BYPASS ACCESS setting

The bypass security feature provides an easier access, with no authentication and encryption for those special situations when this is considered safe. Only the Supervisor, or the Administrator when the Supervisor role is disabled, can enable this feature.

Mode		
Normal	Authentication — Role Based Access Control (RBAC) and passwords in clear	Authentication — RBAC and passwords encrypted SSH tunneling
Bypass access	No passwords for allowed RBAC levels	No passwords for allowed RBAC levels No SSH tunneling

The bypass options are as follows:

- Local — Bypasses authentication for push buttons, keypad, and RS232
- Remote — Bypasses authentication for RS485 and Ethernet
- Local and Remote — Bypasses authentication for push buttons, keypad, RS232, RS485, and Ethernet
- Pushbuttons — Bypasses authentication for front panel push buttons, including in the software. On the graphical front panel, the authentication for side pushbuttons to control breakers and disconnects also is bypassed.

With BYPASS ACCESS set to other than "Disabled," the software displays a message that LOCK SETTINGS is ignored.

RESET KEY ACCESS setting

This setting Indicates whether user authentication is required for executing the RESET button on the front panel or the front panel in the software. When Disabled, user authentication is required at the Administrator or Engineer level. When Enabled, any user can execute the RESET command without authentication. A Supervisor, or the Administrator if the Supervisor role is disabled, can enable this feature.

FACTORY SERVICE MODE setting

This setting allows access by GE support staff to be turned on and off. When Enabled, the device can go into factory service mode. A Supervisor role is necessary to enable the setting, and otherwise an Administrator role when the Supervisor role is disabled. The default value is Disabled. An event is generated when disabling and enabling, and the TROUBLE LED activates when enabled. The factory service user enters a password that is unique for each device. When a factory service user is logged in on the front panel, a remote user cannot access the device at the same time. A factory service user is logged out with any of the following circumstances:

- UR restarts
- Factory Service Mode setting is disabled by Administrator or factory service user
- When a non-factory service user logs in via front panel or serial connection

SUPERVISOR ROLE setting

When Enabled, the Supervisor role is active. To Disable this setting a Supervisor authentication is necessary. If disabled, the Supervisor role is not allowed to log in. In this case, the Administrator can change the settings under the Supervisory menu. If enabled, Supervisor authentication is required to change the settings in the Supervisory menu. If the Supervisor disables their role after authentication, the Supervisor session remains valid until they switch to another role using MMI or until they end the current Supervisor session if using communications. This role is disabled by default.

SERIAL INACTIVITY TIMEOUT setting

The role logged via a serial port is auto logged off after the Serial Inactivity timer times out. A separate timer is maintained for RS232 and RS485 connections. Set this value to a high number, such as eight minutes, when using the rear RS485 terminals for settings write.

GE recommends setting this value to at least 3 minutes for the following scenario: while connected to a CyberSentry device, with serial or USB cable connected to the front panel, and performing "Add Device to Offline Window" or an online/ offline comparison. With less than the recommended 3 minutes, the serial activity timeout interrupts the connection and the security role login window appears. Upon login, the process resumes.

FRONT PANEL INACTIVITY TIMEOUT

The user logged in via the front panel is automatically logged off after the Front Panel Inactivity timer expires. This applies to both the Enhanced Front Panel (EFP) and the Graphical Front Panel (GFP). Inactivity is defined as lack of any key presses.

SSH INACTIVITY TIMEOUT

The user logged in over SSH is automatically logged off after the SSH Inactivity timer expires. This applies to SSH connection over Ethernet. Inactivity is defined as lack of communication sent by a client, including Enervista Setup, to the relay.

BANNER FUNCTION

This setting allows you to enable a banner function. You can edit the text in a separate field.

LOCK SETTINGS setting

Specifies whether the device accepts settings changes, with a default of Disabled to allow changes. The Supervisor role Disables this setting for the relay to start accepting setting changes or command changes. After all the setting changes are applied or commands executed, the Supervisor then Enables the setting to lock setting changes. When set to "Enabled," all other settings in the Supervisory window cannot be edited. Any setting changes on other Modbus screens and IEC 61850 screens cannot be saved to the relay. When the BYPASS ACCESS setting is set to a local or remote option, it overrides LOCK SETTINGS and allows changes.

LOCK FIRMWARE setting

Specifies whether the device accepts a firmware upgrade, with a default of Enabled to deny upgrade. The Supervisor role Disables this setting to allow upgrades. After the upgrade, the Supervisor then Enables the setting to prevent upgrades. When the BYPASS ACCESS setting is set to a local or remote option, it overrides LOCK FIRMWARE and allows changes.

The SUPERVISORY menu has the sub-menu SELF TESTS.

SELF TESTS sub-menu

Setting path: *SETTINGS > PRODUCT SETUP > SECURITY > SUPERVISORY > SELF TESTS*

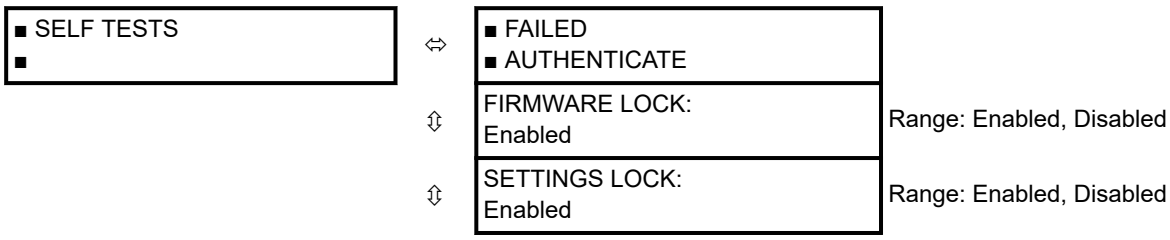

FAILED AUTHENTICATE > FAILED AUTHENTICATE setting

If this setting is Enabled then the number of failed authentications is compared with the Session Lockout threshold. When the Session Lockout threshold is exceeded, this minor alarm indication comes up.

FIRMWARE LOCK setting

If this setting is Enabled, then any firmware upgrade operation attempt when the LOCK FIRMWARE setting is enabled brings up this self test alarm.

SETTINGS LOCK setting

If this setting is Enabled then an unauthorized write attempt to a setting for a given role activates this self test.

6.3.3.4.6 CYBERSENTRY SETUP

When first using CyberSentry security, use the following procedure for setup.

1. Log into the relay as Administrator by using the VALUE keys on the front panel to enter the default password "ChangeMe1#". Note that the LOCK SETTINGS setting needs to be disabled (default) in the SETTINGS > PRODUCT SETUP > SECURITY > SUPERVISORY menu.
2. Enable the Supervisor role if you have a need for it.
3. Make any required changes in configuration, such as setting a valid IP address for communication over Ethernet.
4. Log out of the Administrator account by choosing None.
5. Next, Device or Server authentication can be chosen on the login screen, but the choice is available only in EnerVista. Use Device authentication to log in using the five pre-configured roles (Administrator, Supervisor, Engineer, Operator, Observer). When using a serial connection, only Device authentication is supported. When Server authentication is required, characteristics for communication with a RADIUS server must be configured. This is possible only in the EnerVista software. The RADIUS server itself also must be configured. The appendix called RADIUS Server at the end of this instruction manual gives an example of how to set up a simple RADIUS server. Once both the RADIUS server and the parameters for connecting the UR to the server have been configured, you can choose Server authentication on the login screen of EnerVista.

Notes

The use of CyberSentry for devices communicating through an Ethernet-to-RS485 gateway is not supported. Because these gateways do not support the secure protocols necessary to communicate with such devices, the connection cannot be established. Use the device as a non-CyberSentry device.

Users logged in through the front panel are not timed out and cannot be forcefully logged out by a supervisor. Roles logged in through the front panel that do no allow multiple instances (Administrator, Supervisor, Engineer, Operator) must switch to None (equivalent to a logout) when they are done in order to log out.

For all user roles except Observer, only one instance can be logged in at a time, for both login by front panel and software.

To configure Server authentication:

1. In the EnerVista software, choose Device authentication and log in as Administrator.
2. Configure the following RADIUS server parameters: IP address, authentication port, shared secret, and vendor ID.
3. On the RADIUS server, configure the user accounts. Do not use the five pre-defined roles as user names (Administrator, Supervisor, Engineer, Operator, Observer) in the RADIUS server. If you do, the UR relay automatically provides the authentication from the device.
4. In the EnerVista software, choose Server authentication and log in using the user name and password configured on the RADIUS server for Server authentication login.
5. After making any required changes, log out.

Note:
When changing settings offline, ensure that only settings permitted by the role that performs the settings download are changed because only those changes are applied.

Pushbuttons (both user-control buttons and user-programmable buttons) located on the front panel can be pressed by an Administrator or Engineer role. This also applies to the RESET button, which resets targets, where targets are errors displayed on the front panel or the Targets panel of the EnerVista software. The RESET button has special behavior in that it allows these two roles to press it even when they are logged in through the RS232 port and not through the front panel.

To reset the security event log and self-test operands:

1. Log in as Supervisor (if the role is enabled) or Administrator (if the Supervisor role is disabled)
2. Execute a clear security command under **Commands > Security > Clear Security**.

6.3.3.4.7 SECURITY EVENTS

The security events produced when the CyberSentry option is purchased are sent as sytem log (syslog) messages to a syslog server, if one is configured. The format is as follows.

	Security log	Event number	Date & Timestamp	Username	IP address	Role	Category	Log type	Activity value	Event result

Event Number — Event identification number (index)

Date & Timestamp — UTC date and time

Username — 255 chars maximum, but in the security log it is truncated to 20 characters

IP address — Device IP address

Role — 16 bit unsigned, of type format F617

Enumeration	Role
0	None
1	Administrator
2	Supervisor
3	Engineer
4	Operator
5	Factory

Category — Based on IEC62443-4-2 CR2.8

Category
a) Access Control
b) Request Error
c) Control System event
d) Backup and Restore event
e) Configuration Changes
f) Audit Log event

LogType — Fixed string: “IEC62351-14”

Activity Value — 16 bit unsigned

Activity Value/ Event ID	Event Result	Category
1	Authentication Failed	a) Access Control
2	User Lockout	a) Access Control
3	FW Upgrade	e) Configuration Changes
4	FW Lock	a) Access Control
5	Settings Lock	a) Access Control

Activity Value/ Event ID	Event Result	Category
6	Settings Change. Because this can fill the entire event log, it is supported by the already existing Settings_Change.log file. This event is not required.	e) Configuration Changes
7	Clear Oscillography command	c) Control System event
8	Clear Data Logger command (not applicable to all UR products)	c) Control System event
9	Clear Demand Records command (not applicable to all UR products)	c) Control System event
10	Clear Energy command (not applicable to all UR products)	c) Control System event
11	Clear Unauthorized Access command	a) Access Control
12	Clear Teleprotection Counters command (not applicable to all UR products)	c) Control System event
13	Clear All Relay Records command	c) Control System event
14	Role Log in	a) Access Control
15	Role Log out	a) Access Control
16	WRITE_SETTING_FILE	e) Configuration Changes
17	Factory Mode enabled	f) Audit Log event
18	Factory Mode disabled	f) Audit Log event
19	FW file validation successful	f) Audit Log event
20	FW file validation failed	b) Request Error
21	Supervisor password changed	e) Configuration Changes
22	Administrator password changed	e) Configuration Changes
23	Engineer password changed	e) Configuration Changes
24	Operator password changed	e) Configuration Changes
25	Bypass mode activated	a) Access Control
26	Bypass mode deactivated	a) Access Control
30	CERT_V_FORMAT	f) Audit Log events
31	CERT_PK_SIG_ALG	f) Audit Log events
32	CERT_V_PK_EXPIRED	f) Audit Log events
33	CERT_V_PK_EARLY	f) Audit Log events

If System Integrity Recovery events are logged during a restart of the unit due to an incorrect shutdown sequence, upgrade the firmware to version 7.31 or later to correct this issue.

In addition to supporting syslog, a relay with CyberSentry also saves the security events in two local security files, these being `SECURITY_EVENTS.CSV` and `SETTING_CHANGES.LOG`. Details on these files and how to retrieve them are available in the EnerVista software under **Maintenance > Retrieve File**. Depending on the level of criticality/severity, a syslog server or a reporting tool gathering information from a syslog server can produce reports, charts, and so on. All severity levels are per RFC 5424.

CyberSentry system events recorded

Event	Severity	Description
FAILED_AUTH, ORIGIN, TIMESTAMP	Notice (5)	A failed authentication with origin information (username and IP:MAC address), a time stamp in UTC time when it occurred
AUTH_LOCKOUT, ORIGIN, TIMESTAMP	Warning (4)	An authentication lockout has occurred because of too many failed authentication attempts

Event	Severity	Description
FIRMWARE_UPGD, ORIGIN, TIMESTAMP	Information (6)	Indicates that a change of firmware has occurred
FIRMWARE_LOCK, ORIGIN, TIMESTAMP	Warning (4)	An attempt was made to change firmware while the firmware lock was enabled
SETTING_CHG, ORIGIN, TIMESTAMP	Notice (5)	Indicates setting change(s)
SETTING_LOCK, ORIGIN, TIMESTAMP	Warning (4)	An attempt was made to change settings while the settings lock was enabled
LOGIN, ORIGIN, TIMESTAMP	Information (6)	Indicates when a certain role logged in
LOGOUT, ORIGIN, TIMESTAMP	Information (6)	Indicates when a certain role logged out or timed out
CLEAR_OSCILLOGRAPHY	Notice (5)	Clear oscillography command was issued
CLEAR_DATA_LOGGER	Notice (5)	Clear data logger command was issued
CLEAR_DEMAND_RECS	Notice (5)	Clear demand records command was issued
CLEAR_ENERGY	Notice (5)	Clear energy command was issued
RESET_UNAUTH_ACCESS	Notice (5)	Reset Unauthorized access command was issued
CLEAR_TELEPROTECTION_CNT	Notice (5)	Clear teleprotection counters command was issued
CLEAR_ALL_RECS	Notice (5)	Clear all records command was issued
WRITE_SETTING_FILE	Notice (5)	Write settings file to the relay
BYPASS_ACTIVATE	Warning (4)	Bypass was activated (serial, keypad or both)
BYPASS_DEACTIVATE	Warning (4)	Bypass was deactivated
FACTORY_MODE_ENABLED	Warning (4)	Factory Service Mode activated
FACTORY_MODE_DISABLED	Warning (4)	Factory Service Mode deactivated
FW_FILE_VALIDATION_SUCCESSFUL	Information (6)	Firmware file signature validation successful
FW_FILE_VAILDATION_FAILED	Warning (4)	Firmware file signature validation failed
SUPERVISOR_PSWD_CHANGED	Notice (5)	Supervisor user account’s password changed
ADMIN_PSWD_CHANGED	Notice (5)	Administrator user account’s password changed
ENGINEER_PSWD_CHANGED	Notice (5)	Engineer user account’s password changed
OPERATOR_PSWD_CHANGED	Notice (5)	Operator user account’s password changed

6.4 IEC62351-9 ENCRYPTION FOR R-GOOSE MESSAGES

From version 8.70, all UR relays are equipped with Authentication and encryption of machine-to-machine (M2M) traffic, as described in IEC 62351-9. To get this feature you will need to order CyberSentry Level 2, which contains all of the functionality in CyberSentry Level 1 plus IEC 61850 R-GOOSE security.

6.4.1 SECURITY REFERENCES AND ACRONYMS

Abbreviation	Meaning
CA	Certificate Authority
GCKS	Group Controller/Key Server
GDOI	Group Domain of Interpretation, RFC 6407 Group Domain of Interpretation Protocol Support for IEC 62351 Security Services, RFC 8052.
IKE	Internet Key Exchange, RFC 2409
ISAKMP	Internet Security Association and Key Management Protocol, RFC 2408
KDA	Key Delivery Assurance
KDC	Key Distribution Center
KEK	Key Encryption Key. The key used to secure Push messages
OCSP	Online Certificate Status Protocol, RFC 6960
PKI	Public Key Infrastructure
RA	Registration Authority
RSA	Rivest-Shamir-Adleman. A public-key cryptosystem
SA	Security Association
SCEP	Simple Certificate Enrollment Protocol, RFC 8894
TEK	Traffic Encryption Key. The key used to secure R-GOOSE messages

Term	Meaning
Diffie-Hellman	A mathematical method of securely generating a symmetric key over a public channel
IEC 61850, Edition 2.1	Communication networks and systems for power utility automation
IEC 62351-6	Security for IEC 61850
IEC 62351-9, Edition 2	Cyber security key management for power system equipment
IEC 62351-14	Cyber security event logging
PCItek Garibaldi	A KDC supporting IEC 62351 security for IEC 61850 data streams
Syslog Protocol, RFC 5424	Windows Server NDES – Windows Server Network Device Enrollment Service (SCEP and OCSP)
X.509	Standard for digital certificates

6.4.2 SECURITY KEY MANAGEMENT

The rules governing the process of managing and distributing keys for machine-to-machine secure data communication utilize the following:

- Group Domain of Interpretation (GDOI) RFC 6407
- Internet Security Association and Key Management Protocol (ISAKMP) RFC 2408
- Internet Key Exchange (IKE) RFC 2409.

These reference documents are used to implement IEC 61850 security extensions as described in IEC 62351-9 and IEC 62351-6.

Key management is provided by a Group Controller Key Server (GCKS), more commonly referred to as a Key Distribution Center (KDC) server. This is responsible for producing the symmetric security keys and coordinating with all publishers and subscribers for key distribution and Key Delivery Assurance (KDA). The publishing and subscribing devices, such as URs, are known as Group Members, and can be configured to publish and subscribe to multiple R-GOOSE data streams. Each R-GOOSE group consists of one publisher member and one or more subscriber members. Depending on the configuration, each device could be a member of multiple groups.

A KDC server is usually deployed as software on a standalone computer. It manages the distribution of security keys for all publishers and subscribers. Each device communicates with the KDC to obtain keys, which are used to secure IEC 61850 R-GOOSE data streams via encryption and digital signatures. To increase system reliability, KDCs may be deployed in a redundant configuration. The UR supports communication with either a single or two redundant KDCs.

The KDC server must meet the following requirements:

- It must be capable of identifying the KDC clients on a per data stream basis within the IEC 61850 domain. The stream type supported by the UR is:
  - UDP R-GOOSE as defined in IEC 61850-8-1.
- It must be capable of identifying data streams using:
  - Destination IP addresses.
  - IEC 61850 DataSet references.
- It must support clients requesting keys via *GROUPKEY-PULL* exchanges, as described in IEC 62351-9.
- It must allow a Public Key Infrastructure (PKI) to be used for identity establishment and authentication of clients (such as URs) requesting keys.
- Additionally, it may be able to publish keys to a configured group via *GROUPKEY-PUSH* messages.

The KDC provides unique, common, time limited security keys as part of a Security Association (SA) for each communication group. The publisher and subscribers in that group will use the key from the currently active SA. Each configured group will use a different unique security key. The keys are distributed only to the members of a specific group. They are not shared between groups. If a device is configured to support multiple groups, it will request keys from the KDC for each group of which it is a member. The process of distributing keys is repeated continually to ensure that there is always an active, unexpired SA and associated key available for each group.

Both the KDC and R-GOOSE publishers and subscribers are required to use X.509 digital certificates to provide authentication. This establishes and verifies a chain of trust between the KDC and group members. Certificate enrolment is accomplished using Simple Certificate Enrolment Protocol (SCEP), RFC 8894. Certificate revocation checks are accomplished using Online Certificate Status Protocol (OCSP), RFC 6960. This is also described in IEC 62351-9.

Note:
All security content for machine-to-machine communication has been migrated from IEC 61850-90-5 (now obsolete) into the IEC 61850 Edition 2.1 and IEC 62351 series of standards.

6.4.3 KEY DISTRIBUTION PROCESS

The *GDOI GROUPKEY-PULL* (Pull) exchange is used to establish an authenticated association between the KDC and a Group Member and to distribute keys via SAs. Pull exchanges are initiated by client devices.

Subsequent keys may be distributed using either Pull or *GDOI GROUPKEY-PUSH* (Push) messages. Push messages are initiated by the KDC server. The policy of using either Pull or Push messages is determined by the KDC. If a Group Member does not receive a Push message with a new SA in a timely manner, it will initiate a Pull exchange.

6.4.3.1 GDOI GROUPKEY-PULL SECURITY PHASES

GDOI defines two phases of communication for the Pull exchange. The complete Pull exchange is a Phase 2 ISAKMP protocol, which is protected by a Phase 1 IKE protocol. Phase 1 provides peer authentication,

confidentiality and message integrity. This allows for the secure (encrypted and signed) transfer of Security Association data, including a security key, during Phase 2.

The KDC and all group members must use X.509 digital certificate credentials for authentication, as required by IEC 62351-9. Key distribution is not possible without certificates. The UR and KDC both contain default sample certificates that can be used for testing. These should be replaced with certificates issued by a SCEP server before deployment.

Phase 1: Authentication and secure channel establishment

Phase 1 is concerned with the establishment of a secure, authenticated channel for communication between the KDC server and group member client (UR). The Diffie-Hellman key exchange method is used to establish the secure channel.

Mutual authentication between the KDC and the group member occurs using certificate data. When the UR receives the KDC certificate data, it will also, if configured, periodically initiate an OCSP transaction to verify that the KDC certificate has not been revoked.

Phase 1 starts with the exchange of clear text data and finishes with the exchange of encrypted data using the newly established secure channel.

Phase 2: Determining the policies in use for the group and retrieving the keys

The KDC is configured to know about every group and group member. R-GOOSE groups are uniquely identified by the combination of the destination IP address and the GOOSE dataset reference. In addition, the KDC is configured to know the group member source IP addresses.

During Phase 2 the group member identifies the group for which it is requesting keys. If the configurations are correct, the KDC server responds with the SA data for one or more SAs. This includes the security key, key lifetime, encryption and signature algorithm identifiers, and SA identifiers. If the client supports the algorithms, the exchange completes successfully.

All data exchanged during Phase 2 is encrypted.

6.4.3.2 REKEYING

After an initial authentication and key delivery through a Pull exchange, subsequent keys can be delivered using Push messages (initiated by the KDC) or by new Pull exchanges (initiated by group members). Group members will initiate Pull exchanges to ensure that there is a valid security association and key available before the previous SA has expired.

The SA lifetime is controlled by the KDC policy configuration.

6.4.3.3 SECURITY ASSOCIATIONS

The KDC delivers more than just a security key to group members. The SA data includes the following:

- TEK (Traffic Encryption Key): Used for R-GOOSE encryption and signatures.
- KEK (Key Encryption Key): Used for Push message security.
- SPI (Security Parameter Index): An identifier for the key.
- Authentication Algorithm Identifier: A code that specifies the Authentication Algorithm to be used for the R-GOOSE stream.
- Encryption Algorithm Identifier: A code that specifies the Encryption Algorithm to be used for the R-GOOSE stream.
- Remaining Lifetime: The life of the SA in seconds.
- SA Activation Time Delay (ATD): The time in seconds before the SA will become active.
- KDA (Key Delivery Assurance): A policy that allows the group publisher to use a new key only after a configured percentage of subscribers has indicated successful delivery of the new key.

Except for KDA, the above values are all determined completely by policy settings in the KDC. The use of KDA must be configured in both the KDC and group members. KDA configurations must match.

Generally, the KDC will send two SAs to each group member. One will be the currently active SA, and the other will have an Activation Time Delay. The time delay will be selected by the KDC such that when the currently active SA is nearing its end of life, the delayed SA will become active. This allows the group members to have uninterrupted transitions between keys. The UR refers to the states of SAs as Activated, Pending, or Expired.

6.4.3.4 UR SUPPORTED ENCRYPTION AND SIGNATURE (HASH) ALGORITHMS

Encryption

- AES-CBC-128
- AES-CBC-256
- AES-GCM-128
- AES-GCM-256

Signature

- HMAC-SHA256-128
- HMAC-SHA256-256
- AES-GMAC-128
- AES-GMAC-256

6.4.3.5 HIGH LEVEL SEQUENCE OF EVENTS FOR GDOI PULL EXCHANGE

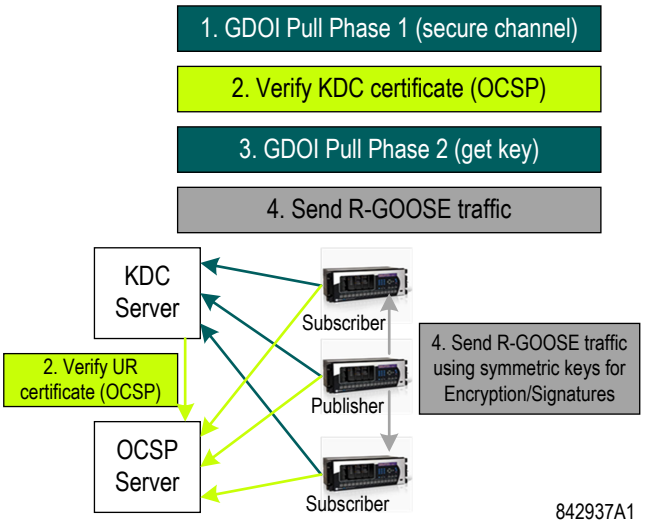

Figure 175: High level sequence for GDOI Pull Exchange

6.4.4 CERTIFICATE MANAGEMENT

6.4.4.1 SIMPLE CERTIFICATE ENROLLMENT PROTOCOL

Simple Certificate Enrollment Protocol (SCEP) is a protocol used for the purpose of issuing and managing X.509 certificates.

The protocol supports the following operations:

- Certificate Authority (CA) public key distribution
- Certificate enrollment and issue
- Certificate renewal
- Certificate query
- CRL query

SCEP defines two types of entities:

- SCEP Server – may be a CA, sub-CA, or RA.
  - A CA is the entity that signs client certificates. It may also act as the SCEP server. In a more complex infrastructure, there may be multiple levels of CAs.
  - A Registration Authority (RA) is a SCEP server that performs validation and authorization of the SCEP request coming from the client, before forwarding it to the CA. The RA, if present, serves as an intermediary between the client and the CA.
- SCEP client – This is the device in need of an X.509 certificate. The client submits the request for a certificate and installs it upon reception from the SCEP server. Clients include both GDOI group members (URs) and the KDC.

SCEP greatly simplifies the process of loading and managing X.509 digital certificates on a device.

The SCEP process allows a user to configure a few parameters on the client device and then instruct the device to interact with the SCEP server in order to retrieve its certificate.

SCEP recommends the use of a challenge password to provide authentication for the certificate request, and a fingerprint to validate the certificate. The values of the password and fingerprint should be obtained manually from the SCEP server. The client will use these values to request and verify the certificates.

The UR implements SCEP client functionality. This includes enrollment and renewal (manual or automatic) requests. The enrollment process includes obtaining a certificate chain to the CA, performing an OCSP certificate revocation check, and obtaining a client certificate to be used for GDOI authentication. The certificate lifetime is determined by the SCEP server and is encoded as part of the certificate.

Note that RFC 8894, which describes SCEP, has an RFC Category of “Informational”. The other RFCs mentioned here all have a Category of “Standards Track”. SCEP was not created as a standard, and therefore there are a number of variations between servers in the implementation details of the protocol. The UR supports SCEP servers that implement SCEP as per the recommendations in RFC 8864. The UR also supports Windows Server NDES SCEP.

6.4.4.2 ONLINE CERTIFICATE STATUS PROTOCOL

Online Certificate Status Protocol (OCSP) RFC 6960 is a protocol utilized for obtaining the revocation status of an X.509 certificate. OCSP client requests can be sent periodically to ensure that a certificate has not been revoked. OCSP servers, often called OCSP responders, provide the revocation status information.

OCSP was created as an alternative to the use of Certificate Revocation Lists (CRL), which are lists of permanently and temporarily revoked certificates published by certificate authorities. OCSP overcomes the main limitation of CRL, which was that clients were required to manage these lists. Using OCSP, a client can send a request for the status of only the certificate it is interested in and only when it intends to use that certificate, which makes it more efficient.

If configured, the UR will use OCSP to check the revocation status of the KDC certificate periodically during Pull exchanges. In the case of OCSP servers with long response times, the UR will issue OCSP requests independent of Pull exchanges. In addition, the UR will use OCSP to check the revocation status of the issuer of its own client certificate during the enrolment process.

As per IEC 62351-9 Edition 2, if a KDC certificate revocation check request fails due to an unresponsive OCSP server, the UR will send the appropriate Syslog security event message and continue to initiate Pull exchanges. This prevents denial-of-service attacks caused by making OCSP responders (servers) unavailable. If the OCSP check indicates that the certificate is either revoked or unrecognized, Pull exchanges will not be continued, unless the UR “Allow Failed Validation” feature is enabled.

6.4.4.3 CERTIFICATE SECURITY

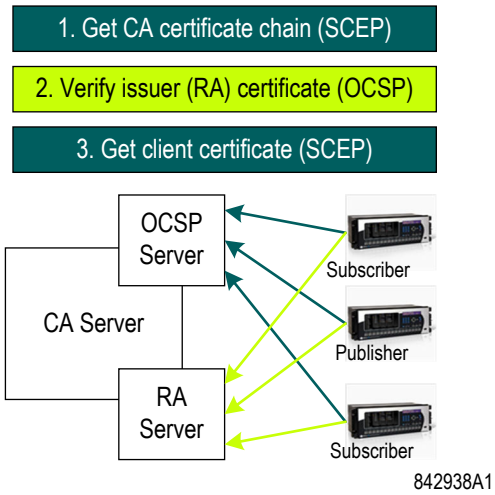

Figure 176: High Level Sequence of Events for GDOI Pull Exchange

The UR supports RSA security for certificates. The RSA key pair is generated using the UR built-in key generator. RSA is a cryptosystem in which the encryption key is public, and it differs from the decryption key, which is kept private (secret). The key generator uses a random number generator to produce two prime numbers and, through several computations, determines the public and private keys associated with them. The key size will be as per the UR configuration. The private key is kept on the UR, while the public key will be used by SCEP.

The SCEP server will provide a chain of certificates, such as RA certificate, sub-CA certificate, and root CA certificate. All certificates are signed by the next highest certificate in the chain. For example, the RA certificate is signed by the sub-CA certificate, the sub-CA certificate is signed by the root CA certificate. The Root CA certificate is self-signed but is verified using the fingerprint value. This is known as a chain of trust. In a simple PKI, the chain may be just the CA and the client.

6.4.5 CONFIGURATION

M2M Security settings can only be configured using the Enervista UR Setup application. Administrator permissions are needed for all settings.

The description of each setting follows after the table below.

Setting Name	Min	Max	Default
SCEP Configuration			
SCEP Server IP	0.0.0.0	223.255.255.254	0.0.0.0
SCEP Server Port	1	65535	80
SCEP Server Path	Edit field displaying ASCII characters. Maximum 128 characters.		
SCEP Password	Edit field will display only "***". This is a "PrintableString" subset of ASCII characters (alphanumeric plus special characters with the exception of "@" and "&"). Minimum 8 and maximum 64 characters.		
SCEP Signature Algorithm	MD5, SHA-1, SHA-256, SHA-384, SHA-512		SHA-256
SCEP Encryption Algorithm	DES-EDE-CBC, AES-CBC-128, AES-CBC-192, AES-CBC-256		DES-EDE-CBC

Setting Name	Min	Max	Default
SCEP Poll Retries	0	120	10
SCEP Poll Interval	1	10	5 seconds
SCEP Automatic Renewal	Disabled	Enabled	Disabled
SCEP Compatibility	RFC 8894	Windows Server	RFC 8894
CA Certificate			
Fingerprint Algorithm	MD5, SHA-1, SHA-256, SHA-384, SHA-512		MD5
CA Certificate Fingerprint	Edit field displaying alphanumeric characters. Maximum 64 characters.		
Certificate Distinguished Name Configuration			
Certificate Common Name	Edit field displaying ASCII characters. Maximum 64 characters.		
Certificate Email	Edit field displaying ASCII characters. Maximum 64 characters.		
Certificate Organization	Edit field displaying ASCII characters. Maximum 64 characters.		
Certificate OrgUnit	Edit field displaying ASCII characters. Maximum 64 characters.		
Certificate Locality	Edit field displaying ASCII characters. Maximum 64 characters.		
Certificate State	Edit field displaying ASCII characters Maximum 64 characters.		
Certificate Country	Edit field displaying a 2-character country code.		
Certificate Certificate RSA Key Length	2048, 3072		2048 bits
Basic OCSP Configuration			
OCSP Server IP	0.0.0.0	223.255.255.254	0.0.0.0
OCSP Use Port From Certificate	No	Yes	No
OCSP Server Port	1	65535	80
Allow Failed Validation	No	Yes	No
Advanced OCSP Configuration			
OCSP Poll Retries	0	120	10
OCSP Poll Interval	1	10	5 seconds
OCSP Use Path From Certificate	No	Yes	No
OCSP Path	Edit field displaying alphanumeric characters. Maximum 128 characters.		
OCSP CertId Algorithm	MD5, SHA-1, SHA-256, SHA-384, SHA-512		SHA-1
Basic GDOI Configuration			
KDC Server IP 1	0.0.0.0	223.255.255.254	0.0.0.0
KDC Server IP 2	0.0.0.0	223.255.255.254	0.0.0.0
Key Usage Policy	No Expired Keys, Allow Expired Keys, Use KDA Method		No Expired Keys
Advanced GDOI Configuration			
KDC Retry Interval	10 sec	300 sec	30 sec
KDC Diffie-Hellman Group Size	Range: MODP-2048, MODP-3072, MODP-4096, MODP-6144, MODP-8192		MODP-4096
Use Test Key	Yes, No		No

SCEP Configuration

SCEP Server IP

IP address of the SCEP Server. 0.0.0.0 or 127.0.0.1 indicates that no SCEP Server is configured, in which case SCEP is disabled.

SCEP Server Port

The TCP port number used by the SCEP server.

SCEP Server Path

The path to the program that parses the SCEP requests on the SCEP server.

SCEP Password

A Challenge Password obtained manually from the SCEP server. The UR sends it in the certificate request and the SCEP server uses it to authenticate the request.

Less frequently used settings for the SCEP server are available when the “Advanced” button is pressed. These are described below.

SCEP Signature Algorithm

The signature algorithm used in SCEP transactions.

SCEP Encryption Algorithm

The encryption algorithm used in SCEP transactions.

SCEP Poll Retries

The maximum number of retries used by the UR when the SCEP server is not available, times out, or indicates that the request is pending.

SCEP Poll Interval

The time between retries.

SCEP Automatic Renewal

Enable/Disable automatic renewal of UR client certificate.

SCEP Compatibility

This allows the UR to obtain certificates from either RFC 8894 compliant SCEP servers, or from Windows Server NDES. Windows Server NDES uses a slightly different certificate renewal methodology than what is recommended in RFC 8894. If this setting is set to “RFC 8894” and the UR requests a certificate renewal from Windows Server NDES, a “badRequest” error response will be returned.

Fingerprint Algorithm

The hash algorithm used to calculate the fingerprint.

CA Certificate Fingerprint

The fingerprint (hash digest) of the CA certificate obtained manually from the SCEP server. It is used to validate the CA root certificate received by the UR during the certificate request.

Certificate Distinguished Name Configuration

A certificate Distinguished Name (DN) is a set of attributes that uniquely identify the client certificate. These attributes are the common name, email address, organization, organization unit, locality, state and country. The following settings are used to configure these attribute fields.

Certificate Common Name

A unique identifier in this field can be used to ensure that the certificate DN is unique. This setting has a unique value by default, but it can be changed as required. The default value is a Globally Unique Identifier (GUID) with the format shown below. This is the string representation of the 16-byte Unique Identifier encoded as a 32-byte hex string.

PEN [3]	RES [2]	PRN [4]	SN [7]

- PEN = Private Enterprise Number – a 3-byte number created and maintained by IANA in a public registry.
- RES = A 2-byte reserved field, set to 0x0000.
- PRN = A 4-byte Product Number.
- SN = A 7-byte Serial Number.

If this value has been changed, it can be restored to the default by resetting the UR to its factory default values.

Certificate Email

Email address associated with the UR to be enrolled.

Certificate Organization

Organization where the UR to be enrolled belongs.

Certificate OrgUnit

Organization Unit where the UR to be enrolled belongs.

Certificate Locality

Locality where the UR to be enrolled resides.

Certificate State

State where the UR to be enrolled resides.

Certificate Country

Country where the UR to be enrolled resides. ISO 3166 2-character country code.

Certificate RSA Key Length

Number of bits used for certificate RSA keys.

OCSP Configuration

OCSP Server IP

IP address of the OCSP Server. 0.0.0.0 or 127.0.0.1 indicates that no OCSP Server is configured, in which case OCSP is disabled.

OCSP Use Port From Certificate

Use OCSP port number from the certificate Authority Information Access field. If set to No, the OCSP Server Port Number setting value will be used.

OCSP Server Port

The TCP port number used by the OCSP server.

Allow Failed Validation

When set to “Yes” the UR will continue to accept keys provided by the KDC server even if the OCSP server indicates that the KDC certificate has been revoked or is unknown.

OCSP Advanced Configuration

OCSP Poll Retries

The maximum number of retries used by the UR when the OCSP server is not available or times out.

OCSP Poll Interval

The time between retries.

OCSP Use Path From Certificate

Use OCSP Path from the certificate Authority Information Access field. If set to No, the OCSP Path setting value will be used.

OCSP Path

The path to the program that parses the OCSP requests on the OCSP server.

OCSP CertId Algorithm

The algorithm used by the UR for the hash calculation of the CertId data.

OCSP requests include information from the issuing certificate of the certificate that is being checked. This information is called the “CertId”. The requester performs a hash calculation on this data and includes it in the request. An algorithm identifier is also included so that the OCSP responder can verify the hash value. SHA-1 is commonly used as the hash algorithm, but some OCSP servers may require more modern hash algorithms. The algorithm used by the UR is selected by this setting.

GDOI Configuration

KDC Server IP 1

The IP address of the first of two redundant KDC servers.

KDC Server IP 2

The IP address of the second of two redundant KDC servers. If there is no redundant KDC server, this can be set to 0.0.0.0 or 127.0.0.1.

Key Usage Policy

This setting determines how the security keys distributed by the KDC server are used with regards to their lifetimes. There are three options.

`No Expired Keys`: When this option is selected, neither publishers nor subscribers will use expired keys. If the KDC has failed or become isolated from the network, secure R-GOOSE communication will stop. This policy should be chosen when the security of data takes precedence over the reliability of R-GOOSE communication.

`Allow Expired Keys`: When this option is selected, both publishers and subscribers will continue to use the latest keys that they have available even after the keys have expired. This will allow secure R-GOOSE communication to continue, with expired keys, if the KDC fails or becomes isolated from the network.

`Use KDA Method`: The Key Delivery Assurance (KDA) method allows for continued secure R-GOOSE communication, with an up-to-date key, when enough subscribers in a group have acknowledged delivery of new keys. R-GOOSE publishers are informed by the KDC when a configured percentage of subscribers have new keys. At this point the group publisher is allowed to start using the new key in the normal manner before the current key expires. If an insufficient percentage of subscribers have acknowledged delivery of new keys, secure R-GOOSE communication will continue with the existing key, even after it has expired. Note that this is all on a per group basis. The KDA percentage for each group is determined and sent to each group publisher separately. The percentage required to allow the publisher to use a new key is a KDC policy configuration.

This method should be chosen when the reliability of the R-GOOSE communication takes precedence over cyber security concerns.

If the UR Key Usage Policy is set to `Use KDA Method`, all groups on the UR will use KDA. This setting is not available on a per group basis. The KDC policy must then be set so that all groups of which the UR is a member

are configured to use KDA. It is critical that there is not a mismatch between the UR and the KDC in these configurations!

Adgvanced GDOI Configuration

Less frequently used settings for the KDC server are available when the **Advanced** button is pressed.

KDC Retry Interval

The interval between consecutive Pull exchange retries. Used for scheduling Pull exchanges. If the KDC policy is configured to use Push messages for any group on the UR, this setting should be set to its maximum value of 300 seconds (five minutes). This will allow the KDC enough time to send Push messages before the UR will initiate Pull exchanges. If no groups are configured for Push, the default value of 30 seconds can be used.

Diffie-Hellman Group Size

The Diffie-Hellman group size value to be used during a Pull exchange.

Use Test Key

Enable the UR Test Key feature.

For testing the transmission of encrypted and signed R-GOOSE traffic over a network, the UR can be configured to use a fixed test key. This common key is hardcoded in every UR and has an unlimited lifetime. When this setting is set to "Yes", the test key will be used instead of keys obtained from the KDC using Pull exchanges or Push messages. No certificates are needed, and no connectivity to KDC or OCSP servers is required. This setting applies to all R-GOOSE groups on the UR, both publishers and subscribers. The UR should not be deployed with this feature enabled.

6.4.6 COMMANDS

Retrieve Certificates

This command triggers the following sequence:

1. The UR generates a new RSA public/private key pair to be used with the UR client certificate. The key length is as per the UR setting “Certificate RSA Key Length”.
2. The UR sends a SCEP request for the CA certificates chain (e.g. root CA, subordinate CA, RA).
3. The UR sends an OCSP request to verify the revocation state.
4. The UR sends a SCEP request for the new UR client certificate.

This sequence may take many seconds or minutes depending on the operation of the SCEP and OCSP servers. The SCEP server in particular may make the UR wait in polling mode while it finishes other operations or obtains the certificates from a higher-level server. The SCEP and OCSP Poll and Retry settings can be adjusted to create appropriate response characteristics. Timeout errors can be prevented by increasing the values of these settings.

The following errors may be returned:

`SCEP Server Unavailable`: The SCEP server is not online or cannot be reached.

`SCEP HTTP Error`: The SCEP server returned an HTTP error.

`SCEP Response failInfo = badAlg`: The SCEP server returned 0 (badAlg). Unrecognized or unsupported algorithm.

`SCEP Response failInfo = badMessageCheck`: The SCEP server returned 1 (badMessageCheck). Signature verification failed.

`SCEP Response failInfo = badRequest`: The SCEP server returned 2 (badRequest). Transaction not permitted or supported.

`SCEP Response failInfo = badTime`: The SCEP server returned 3 (badTime). The request time was not sufficiently close to the SCEP server time.

`SCEP Response failInfo = badCertId`: The SCEP server returned 4 (badCertId). No certificate could be identified matching the provided criteria.

`SCEP Request Incorrect DN`: The UR could not process the requested Distinguished Name. Check the UR Distinguished Name settings for errors.

`SCEP Failure Pending`: The SCEP Server did not complete the request within the maximum Poll Retries and Poll Interval settings.

`SCEP Fingerprint Error`: The UR fingerprint value calculation did not match the CA Certificate Fingerprint setting value. The Fingerprint Algorithm setting value may be incorrect.

`SCEP Decryption Error`: The response from the SCEP server could not be decrypted. Check the SCEP Encryption Algorithm setting, and the algorithm(s) supported by the SCEP server.

`OCSP Server Unavailable`: The OCSP server is not online or cannot be reached.

`OCSP Revoked Certificate`: The OCSP server indicated that the issuing certificate has been revoked. The UR has not requested a client certificate.

`OCSP Unknown Certificate`: The OCSP server indicated that it did not recognize the issuer of the certificate.

`OCSP malformedRequest`: The OCSP server indicated that the request did not conform to the OCSP syntax.

`OCSP internalError`: The OCSP server returns indicated that it reached an inconsistent internal state.

`OCSP tryLater`: The OCSP server indicated that the service exists but is temporarily unable to respond.

`OCSP sigRequired`: The OCSP server returns this in cases where the server requires that the client sign the request in order to construct a response.

`OCSP unauthorized`: The OCSP server returns this in cases where the client is not authorized to make this query to this server, or the server is not capable of responding authoritatively.

Display Certificate

This command triggers UR Setup to obtain the UR client certificate and open a screen to display the content of the certificate, if a valid certificate is available.

Get SCEP Server Capabilities

This command triggers the UR to send the SCEP Get Capabilities request to the SCEP server. The server will respond with a list of its capabilities. This includes supported features and algorithms. Upon reception of the response from the SCEP server, the UR will make this information available in a text file. This can be obtained from the UR using UR Setup by opening ***Maintenance > Retrieve File*** then selecting SCEP_GetCACaps.txt and Read File as shown below.

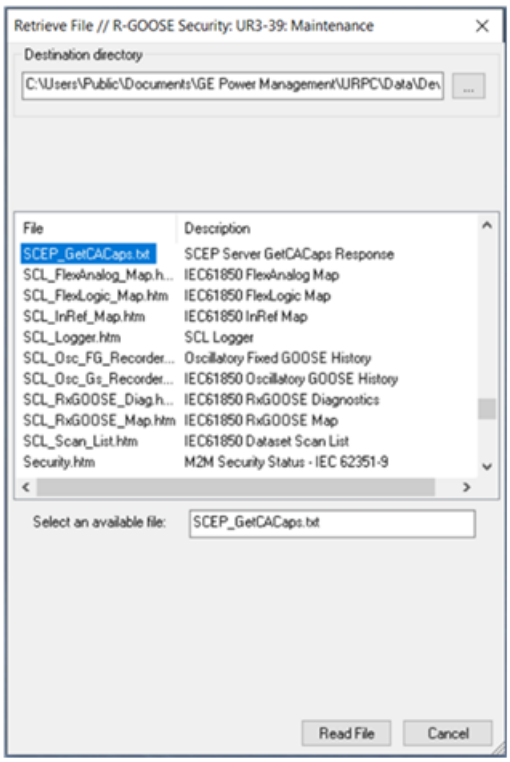

Figure 177: SCEP_GetCACaps.txt file

The file contents should be similar to the following example retrieved from Windows Server NDES:

```
POSTPKIOperation
Renewal
SHA-512
SHA-256
SHA-1
DES3
```

Renew Certificate

This command triggers the UR to send a SCEP renewal request to the SCEP server. Possible error codes are the same as those shown for the ***Retrieve Certificates*** command, with the addition of:

`Command Not Accepted`: It is not possible for the SCEP server to renew a certificate that it did not issue. Ensure that the UR sample certificates are not in use.

6.4.7 ADVANCED CONFIGURATION AND TROUBLESHOOTING

6.4.7.1 USING UR SAMPLE CERTIFICATES

The UR comes from the factory with sample CA and client X.509 certificates installed. The sample certificates can be used for testing with the KDC, which also comes with sample certificates. Before deployment, the UR should be configured to obtain certificates supplied by a SCEP server. When certificates are issued by a SCEP server, the sample certificates will be deleted. To restore the sample certificates, the UR must have all of its settings reset to factory values.

In order to work with the UR, the KDC requires a copy of the CA certificate from the UR. This can be obtained from the UR using UR Setup by opening ***Maintenance > Retrieve File*** then selecting `ca.pem` and **Read File** as shown below.

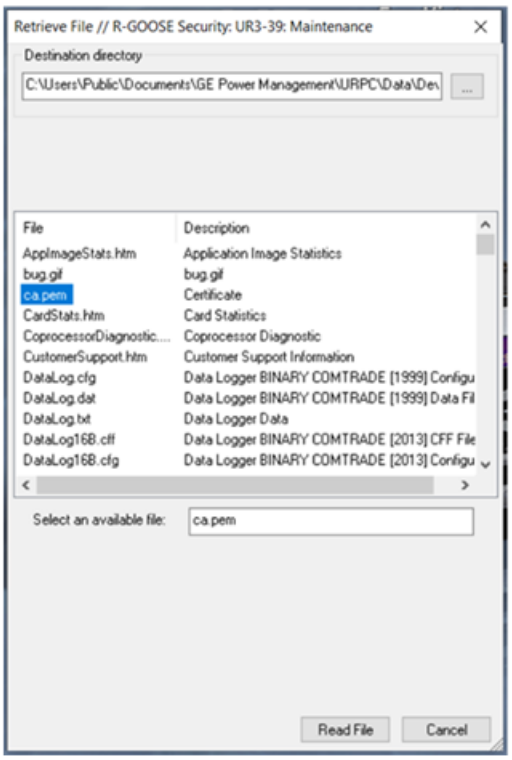

Figure 178: Retrieve file "ca.pem"

6.4.7.2 SCEP SERVER CHALLENGE PASSWORD AND FINGERPRINT (THUMBPRINT) EXAMPLE

The challenge password and fingerprint (also referred to as thumbprint) should be obtained from the SCEP server. In the case of Windows Server NDES, these values are available on a web page as shown below. These values can be copied from this page and used in the UR ***SCEP Password*** and ***SCEP CA Fingerprint*** settings. Note that when copying the fingerprint value from the Windows Server screen shown below, there are spaces every eight characters that should be removed before saving the value in UR Setup.

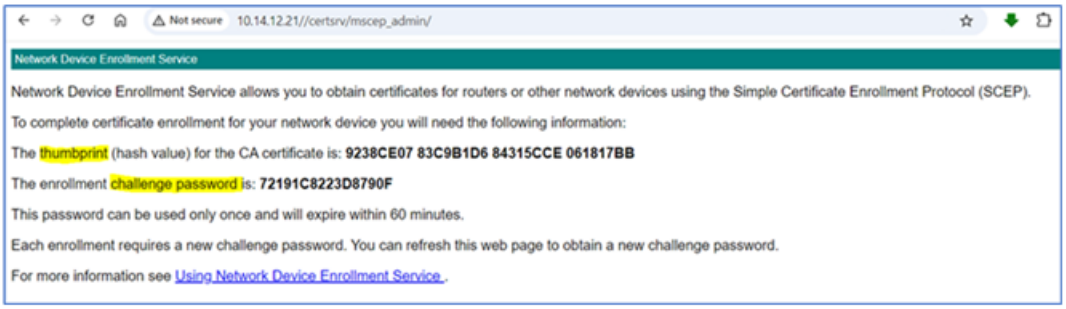

Figure 179: Network Device Enrolment Service

Windows normally uses the MD5 algorithm to produce the above thumbprint. The value of the UR setting ***Fingerprint Algorithm*** must match the algorithm used by Windows.

6.4.7.3 USE OF PULL EXCHANGES VS. PUSH MESSAGES

The UR can obtain SAs from the KDC using either Pull exchanges or Push messages. Push messages are relatively simple since they involve the KDC pushing SAs to the UR using an already agreed upon, secure KEK

value. If requested, the UR will respond with a Push acknowledgement message. No re-authentication or additional secure channel establishment is required. In comparison, Pull exchanges involve a number of data exchanges to authenticate and re-establish the secure channel between the UR and KDC. Additionally, a revocation check of the KDC certificate using OCSP is initiated periodically by the UR in between the two phases of the Pull exchange.

The configuration to use either Push or Pull is set in the KDC for each Publication Group, in the IED Management page, by the ***Key Generation Policy -> Key Exchange Mechanism*** setting.

Note that even when using Push messages, there will be an initial Pull exchange so the UR can obtain SAs and KEK values from the KDC. Also, the UR expects to receive a Push message well before the SAs expire, and if it does not, it will initiate a new Pull exchange. If the KDC policy is configured to use Push messages for any group on the UR, the KDC Retry Interval setting should be set to its maximum value of 300 seconds (five minutes). This will allow the KDC enough time to send Push messages before the UR will initiate Pull exchanges. If no groups are configured for Push, the default value of 30 seconds can be used.

6.4.7.4 USE OF DIFFERENT CERTIFICATE ISSUERS BETWEEN URS AND THE KDC

OCSP requests are required to contain information from the issuer certificate of the certificate that is being checked for revocation. If the UR is configured to use an OCSP server, it will issue an OCSP request to check the KDC certificate whenever a GDOI Pull exchange is initiated. The UR thus requires information from the issuer of the KDC certificate. In a PKI where both the UR and KDC client certificates have the same issuer, the UR can use the issuer information from its own client certificate. This is the recommended PKI deployment.

If the PKI is more complex and the KDC and UR client certificates have different issuers, the UR will have no access to the issuer information from the KDC certificate. In this case the UR cannot use OCSP to check the revocation status of the KDC certificate.

6.4.7.5 KDC SECURITY POLICY MISMATCH WITH UR R-GOOSE SECURITY SETTING

IEC 61850 and IEC 62351 have created the possibility for a configuration mismatch between group members (URs and other devices) and the KDC. IEC 61850 specifies the Substation Configuration Language (SCL) element ***securityEnable***. Possible values are `None`, `Signature`, and `SignatureAndEncryption`, as shown in the UR Setup screen below.

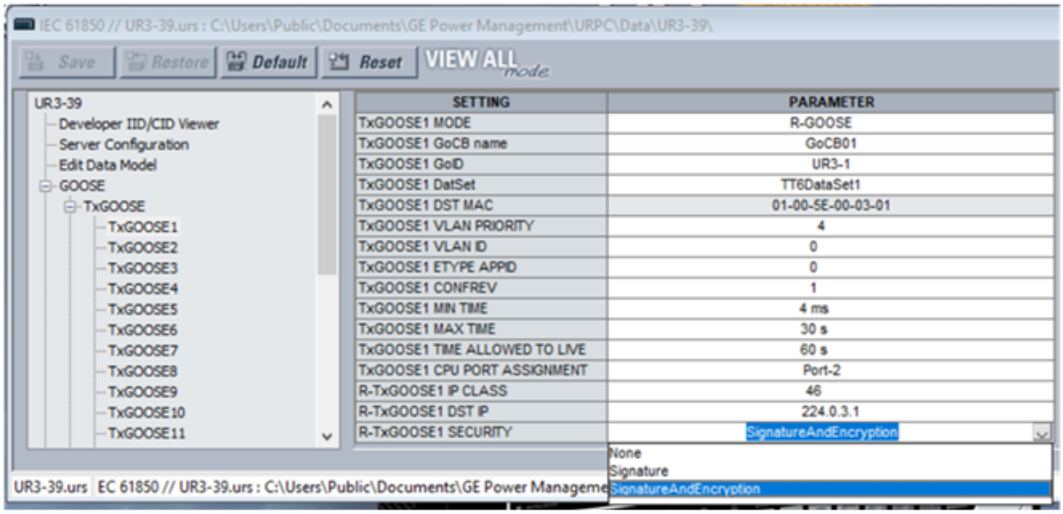

842942A1

Figure 180: UR TxGOOSE Security Configuration

If a UR R-GOOSE publisher is configured for `SignatureAndEncryption`, it is necessary to configure the KDC policy for this publisher to have both `Key Confidentiality Mechanism` and `Hash Algorithm` values. as shown in the KDC screen excerpt below.

6.4.7.6 KDC KEY GENERATION POLICY

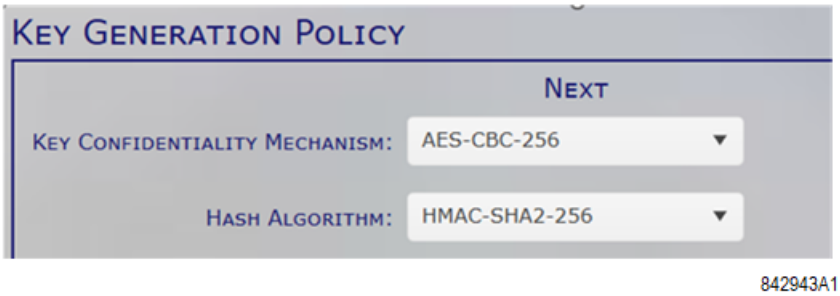

Figure 181: KDC Key Generation Policy Encryption and Signature Algorithms

If the UR publishers and subscribers are configured for `SignatureAndEncryption` and the KDC has configured that group with a Key Confidentiality Mechanism of `None`, then the UR will not be provided with an encryption algorithm value and will thus not be able to encrypt and publish R-GOOSE messages as per its configuration. This situation must be corrected so the UR and KDC configurations match, otherwise R-GOOSE publication will not occur.

The UR can be configured for non-secure R-GOOSE communication. In this case, if the UR R-GOOSE publisher and subscriber security is configured as `None`, the UR will not initiate GDOI Pull exchanges with the KDC. The R-GOOSE messages will be published with no security, and the values configured in the KDC policy screen will not be used.

6.4.7.7 UR UNICAST R-GOOSE

The UR supports a non-standard variation of R-GOOSE for use in networks without IP multicast capabilities. The destination IP address (DST IP) can be configured with a unicast address, instead of the standard multicast address. This unicast R-GOOSE capability is outside the scope of both IEC 61850 and IEC 62351. Unicast R-GOOSE cannot be used with IEC 62351 security.

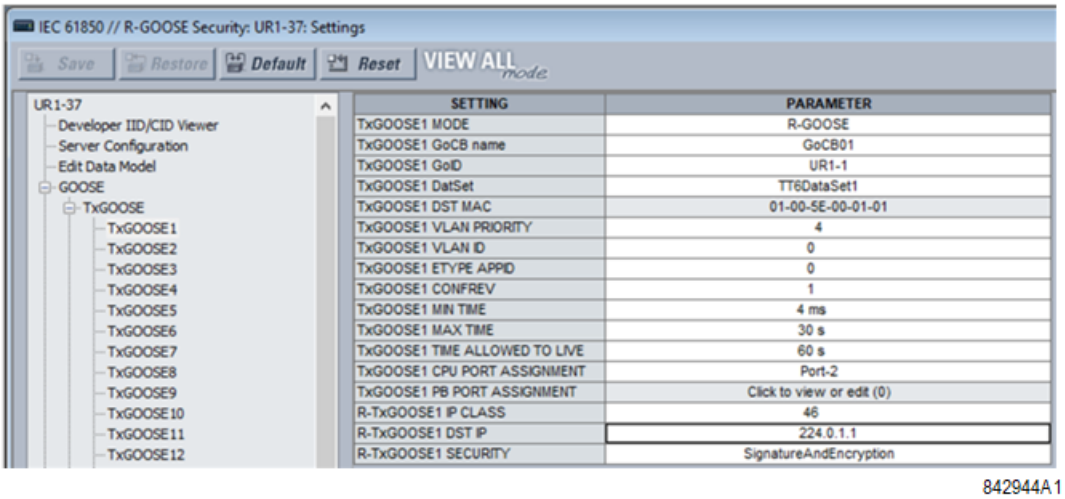

Figure 182: R-GOOSE Security

6.4.7.8 UR CLOCK ACCURACY

High levels of UR clock accuracy are not required for IEC 62351 R-GOOSE security. However, there should be a time synchronization protocol such as SNTP, IRIG-B, or PTP utilized to provide a time value to the UR clock. If the UR clock has a large variance from the PKI and KDC time base, there could be problems with SCEP and OCSP transactions, and certificate usage. It is important to ensure that the UR clock is reasonably accurate, even during

bench testing. UR Setup can be used to provide single time synchronization commands from ***Commands -> Set Date And Time***.

6.4.7.9 NETWORK MAXIMUM TRANSMISSION UNIT (MTU)

During the GDOI Pull exchange, data from the X.509 certificates of the KDC and group member is exchanged. This data is contained in UDP datagrams. These particular datagrams are often larger than can be carried in one IP packet or one Ethernet frame (approximately 2000 bytes is common). In this situation, the UR will transmit and receive fragmented IP packets. The UR does not contain a setting for network MTU, so it will transmit frames of the maximum Ethernet length. This should be considered when configuring network equipment such as routers and firewalls.

6.4.8 STATUS

The UR provides a web page to show the status of certificates and the SCEP, OCSP, and KDC servers.

6.4.8.1 M2M SECURITY STATUS CERTIFICATES

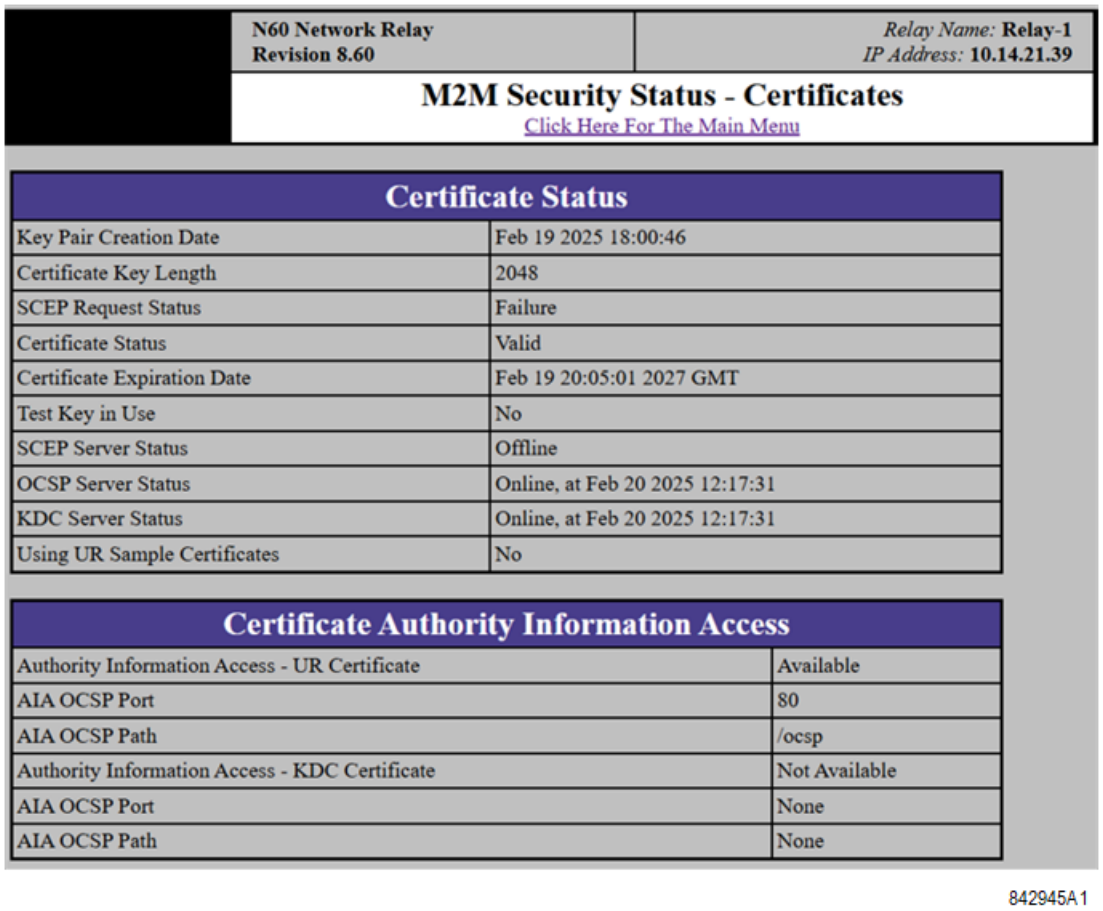

N60 Network Relay
Revision 8.60

Relay Name: **Relay-1**
IP Address: **10.14.21.39**

M2M Security Status - Certificates

Click Here For The Main Menu

Certificate Status	
Key Pair Creation Date	Feb 19 2025 18:00:46
Certificate Key Length	2048
SCEP Request Status	Failure
Certificate Status	Valid
Certificate Expiration Date	Feb 19 20:05:01 2027 GMT
Test Key in Use	No
SCEP Server Status	Offline
OCSP Server Status	Online, at Feb 20 2025 12:17:31
KDC Server Status	Online, at Feb 20 2025 12:17:31
Using UR Sample Certificates	No

Certificate Authority Information Access	
Authority Information Access - UR Certificate	Available
AIA OCSP Port	80
AIA OCSP Path	/ocsp
Authority Information Access - KDC Certificate	Not Available
AIA OCSP Port	None
AIA OCSP Path	None

842945A1

Figure 183: M2M security status certificates

The SCEP Request Status possible values are `Not Sent`, `Failure`, `Pending`, and `Success`.

The Certificate Status possible values are `No Certificate`, `Valid`, `Expired`, and `Revoked`.

Certificate Authority Information Access (AIA) is optional data that may be on a certificate. If available, it contains the OCSP port number and path of the OCSP server.

The server status information is available on the UR front panel.

ACTUAL VALUES > ACTUAL VALUES STATUS > SECURITY STATUS > SERVER STATUS:

■ SERVER STATUS ■	⇔	SCEP:Online 2025/02/11 09:35:49	Range: Online/Offline
	⇕	KDC:Online 2025/02/11 09:35:49	Range: Online/Offline
	⇧	OCSP: Online 2025/02/11 09:35:49	Range: Online/Offline

The UR provides a web page that shows the values and status of all of the Security Associations used by the UR. This includes configurations where the UR is a subscriber group member, and where it is a publisher group member.

Group 12 - Subscriber (Signature & Encryption)								
IP: [224.0.2.9], DataSet: [SUBMaster/LLN0.TT3DataSet05]								
SA	Current	State	Time to Activate	Time to Expire	KDA	SPI	Life	ATD
1	>>>>	ACTIVATED	--	280	0	0x3dd8437f	589	0
2		PENDING	221	--	0	0x9cca5953	600	530
3		EXPIRED	--	--	0	0x8d167387	0	0
Pull timer not Running.								
Encryption Algorithm: AES-CBC-256 Authentication Algorithm: HMAC-SHA256-256								

842946A1

Figure 184: Excerpt from M2M Security Status - IEC 62351

The UR can store up to three SAs simultaneously. Only one SA is active at any given time. All SAs have equal priority, and the SA currently being used is based on the state of the SA and the SA being used by the publisher.

In the above example, the SA 1 state is *Activated*, and the associated key is currently being used to secure the R-GOOSE stream. It expires in 280 seconds. The SA 2 state is *Pending* and will become *Activated* in 221 seconds. In this example there will be an overlap time of 280-221 = 59 seconds to allow the publisher and other subscribers to transition to the new key. SA 3 has previously become *Expired*.

This UR web page also shows the Encryption and Authentication algorithms that are being used to secure the R-GOOSE stream. These policy values are configured on the KDC and sent to the UR.

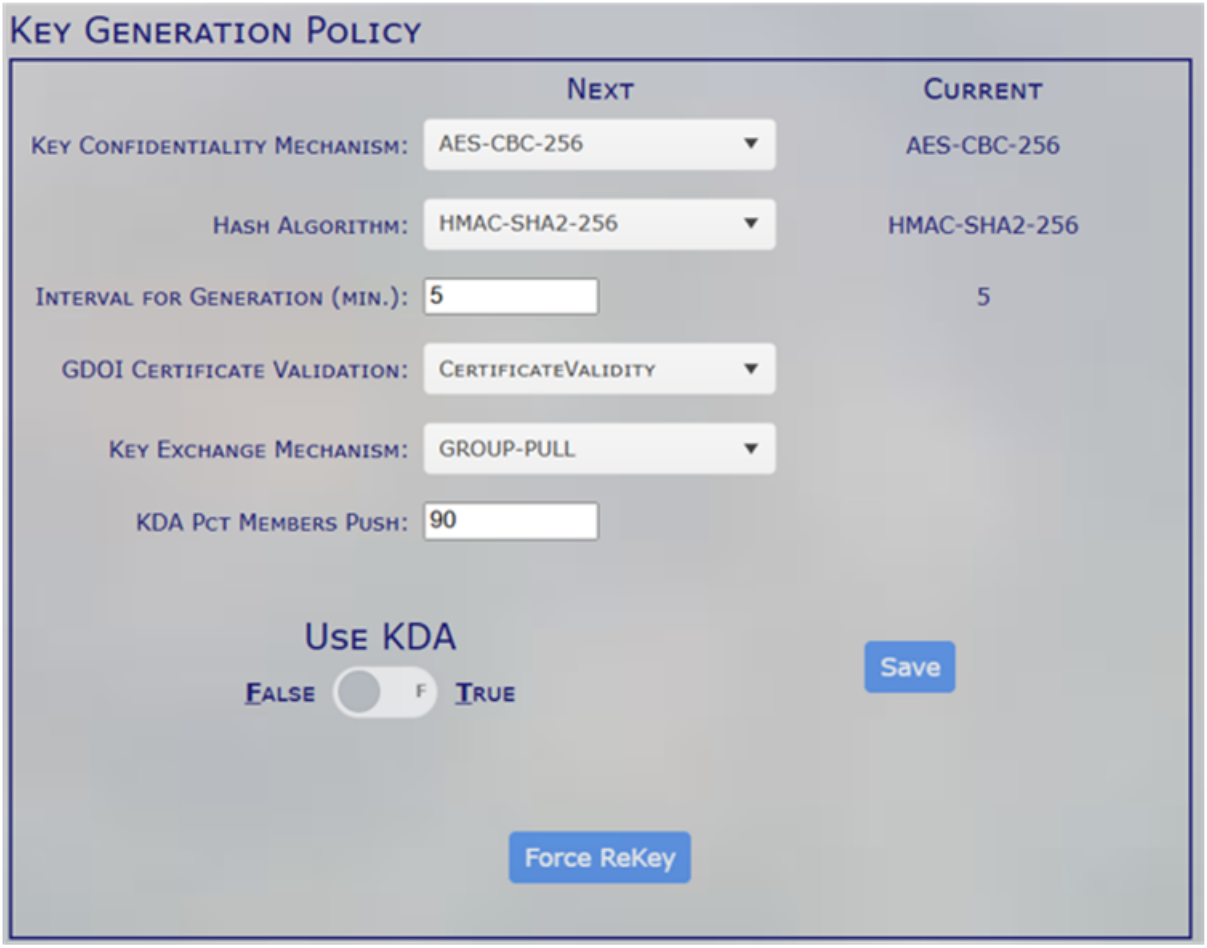

842947A1

Figure 185: KDC Key Generation Policy screen

6.4.8.2 SYSLOG SECURITY EVENTS

IEC 62351-9 defines many Syslog security events. The UR supports the generation of the events that are relevant to its functionality. The format of the event messages is compliant to RFC 5424 and follows the information structure rules in IEC 62351-14.

The following Syslog security events specified in IEC 62351-9 are supported by the UR:

Certificate Enrollment Events

IEC 62351-9:1.3 Enrollment with SCEP successfully performed

IEC 62351-9:1.4 Enrollment with SCEP aborted due to failure

Certificate Verification Events

IEC 62351-9:2.2 Public Certificate signature verification failed

IEC 62351-9:2.3 Version of X.509 certificate not matching expected version

IEC 62351-9:2.4 Issuer does not match known and trusted issuer.

IEC 62351-9:2.5 Signature algorithm not supported

IEC 62351-9:2.6 Public-key certificate validity: expired

IEC 62351-9:2.7 Public-key certificate validity: not valid, yet

IEC 62351-9:2.8 Subject not included in public-key certificate

IEC 62351-9:2.9 Algorithm in public-key certificate not supported

IEC 62351-9:2.10 Path validation error as trust anchor is not supported

IEC 62351-9:2.11 Certification path validation error

IEC 62351-9:2.12 Critical extension unknown

IEC 62351-9:2.14 Authority key identifier not included in public-key certificate

IEC 62351-9:2.15 Subject key identifier not included in public-key certificate

IEC 62351-9:2.17 BC not included in CA certificate

IEC 62351-9:2.18 Violation of path length constraints in CA certificate

IEC 62351-9:2.21 Key usage not included for signing certificates.

IEC 62351-9:2.25 Extended Key Usage not included for OCSP signing in OCSP responder certificate

IEC 62351-9:2.27 OCSP responder information not contained in public-key certificate

Certificate Revocation Status Events

IEC 62351-9:4.1 Certificate has been revoked

IEC 62351-9:4.5 OCSP responder not accessible

IEC 62351-9:4.6 OCSP responder connection timeout

IEC 62351-9:4.7 Certificate not known to OCSP responder

IEC 62351-9:4.8 OCSP response expired

IEC 62351-9:4.9 OCSP response message signature verification failed

GDOI Security Events

IEC 62351-9:5.1 GDOI Cryptographic algorithms not supported

IEC 62351-9:5.4 GDOI-PULL Phase 2 decryption issue

IEC 62351-9:5.6 GROUPKEY-PULL unable to agree to PHASE 1 keys

IEC 62351-9:5.8 KDA failure

6.4.8.3 UR SELF-TESTS AND FLEXLOGIC OPERANDS

Each Self-test has an associated Flexlogic operand.

SCEP SERVER UNAVAIL

Description: A certificate was requested, but the SCEP server is not reachable.

Type: minor

Latched: No

Message: `Server HTTP Error`, `Server Timeout Error`, or `Verify connectivity`.

What to do: Verify SCEP Server IP Address setting, network settings, and connectivity.

SCEP WRONG PATH

Description: SCEP path is wrong.

Type: minor

Latched: No

Message: `Correct the path`.

What to do: Verify the SCEP Server Path setting.

SCEP FAILURE

Description: SCEP server error.

Type: minor

Latched: No

Message: `Pending`, `Bad Algorithm`, `Bad Message Check`, `Bad Request`, `Bad Time`, `Bad Certificate ID`, `Reused Private Key`, `CA Error`, `Wrong DN`.

What to do: Check SCEP server error logs.

CERT NEAR EXPIRY

Description: The X.509 certificate is close to expiration.

Type: minor

Latched: No

Message: `Renew certificate`.

What to do: Use the UR Setup **Renew Certificate** command.

CERT UNAVAILABLE

Description: Certificate was not issued, or it expired.

Type: minor

Latched: No

Message: `Retrieve certs`, or `Renew certificate`.

What to do: Use the UR Setup **Retrieve Certificates** command.

KDC SERVER UNAVAIL

Description: The KDC server is not reachable (neither the main server nor the backup one).

Type: minor

Latched: No

Message: `Verify connectivity`.

What to do: Verify KDC Server IP Address settings, network settings, and connectivity.

KDC AUTH FAILED

Description: The KDC response contains errors, no KDC certificate is provided or the KDC certificate is invalid.

Type: minor

Latched: No

Message: `Not Authenticated`.

What to do: Verify UR and KDC certificates, and KDC certificate configuration.

KDC SA UNSUPPORTED

Description: UR does not support the algorithms specified by the KDC server.

Type: minor

Latched: No

Message: `Unsupported SA`.

What to do: Check KDC Key Generation Policy configuration.

KDC INVALID KEY

Description: The key download contains errors.

Type: minor

Latched: No

Message: `KDC Key Error`.

What to do: Verify network connectivity between URs and KDC. Check KDC Key Generation Policy configuration.

OCSP SERVER UNAVAIL

Description: The OCSP server is not reachable.

Type: minor

Latched: No

Message: `Server Timeout Error`.

What to do: Verify OCSP IP Address setting, network settings, and connectivity.

OCSP RA CERT FAIL

Description: The RA server certificate has been revoked or the status is unknown.

Type: minor

Latched: No

Message: `Revoked RA Cert`, or `Unknown RA Cert`.

What to do: Verify UR certificate chain revocation status. Use UR Setup **Retrieve Certificates** command to obtain new certificates.

OCSP KDC CERT FAIL

Description: The KDC server certificate has been revoked.

Type: minor

Latched: No

Message: `Revoked KDC Cert`, or `Unknown RA Cert`.

What to do: Verify revocation status of the KDC certificate. The UR Allowed Failed Validation feature can be used to allow the UR to continue to receive keys from a KDC with a revoked certificate.

RGOOSE SECURITY

Description: R-GOOSE packet failed authentication / decryption.

Type: minor

Latched: No

Message: `RGOOSE Security Fail`.

What to do: Verify network connectivity between URs and KDC. A UR may not be able to obtain keys and has become out of sync with the other group members.

KDA FAILED

Description: Key Delivery Assurance failed for at least one group.

Type: minor

Latched: No

Message: `KDA Failure`.

What to do: Verify network connectivity between URs and KDC. At least one UR has not been able to obtain keys and has become out of sync with the other group members. Check to ensure that the KDA configuration is the same on all URs in a group, and in the KDC Key Generation Policy configuration for the group.

KDC SECURITY WRONG

Description: UR R-GOOSE security configuration does not match KDC Key Generation Policy.

Type: minor

Latched: No

Message: `KDC / securityEnable`.

What to do: Check to ensure that R-GOOSE ***securityEnable*** setting values (i.e. *`None`*, *`Signature`*, or ***SignatureAndEncryption***) match the configuration in the KDC Key Generation Policy for all groups.

M2M EXCEPTION

Description: Internal UR alarm.

Type: minor

Latched: Yes

Message: `Contact factory (01)`, `Contact factory (02)`, or `Contact factory (03)`.

where:

01 indicates “Memory allocation failed”

02 indicates “File access errors”.

03 indicates “Function argument check failed”.

What to do: Contact the factory for technical support.

6.4.9 SECURE R-GOOSE CONFIGURATION PROCEDURE

The UR must be configured correctly in order for secure R-GOOSE to function successfully. The following sequence of steps describes the configuration procedure. This assumes that the PCItek Garibaldi KDC is used to provide the security keys.

The procedure below starts with a simple non-encrypted R-GOOSE configuration and adds additional security layers, GDOI, SCEP and OCSP. It includes the following steps:

1. Non-secure R-GOOSE configuration.
2. Using the built-in UR test key for encrypting and decrypting R-GOOSE messages.
3. Using the built-in sample certificates to prepare the UR to obtain security keys from the KDC.
4. Using a SCEP server to obtain secure certificates.
5. Using an OCSP server to check the KDC server certificate.
6. Configuring the GDOI settings in the UR.
7. Configuring the KDC server settings.

6.4.9.1 NON-SECURE R-GOOSE CONFIGURATION

A UR can be configured to both publish multiple R-GOOSE message streams and subscribe to multiple R-GOOSE message streams. The R-GOOSE message streams can be non-secure or secure. A non-secure configuration is easier to deploy since R-GOOSE messages are not encrypted or signed, and a KDC is not required. It is recommended to start with a non-secure configuration and achieve successful communication before enabling security. A simple configuration with one UR configured as an R-GOOSE stream publisher, and one UR as an R-GOOSE subscriber can be used.

Using EnerVista UR Setup software:

- Select Settings -> IEC 61850 -> DataSets to create a dataset for publishing in one UR.

- Select Settings -> IEC 61850 -> GOOSE -> TxGOOSE to configure the publisher stream.

- Select Settings -> IEC 61850 -> GOOSE -> RxGOOSE to configure the subscriber in the other UR. Import the CID file from publisher UR to select the subscribed data.

- Set the “SECURITY” setting for each publisher and subscriber stream to “None” to test non-secure R-GOOSE communication.

- Save the settings to the URs.

- Select Actual Values -> Status -> RxGOOSE Status to view the subscription status in the subscriber UR. Ensure that the configured R-GOOSE stream is online and working as expected.

With a suitable network configuration, the R-GOOSE messages can be viewed using a network traffic capture program such as Wireshark.

6.4.9.2 TEST KEY

Once non-secure R-GOOSE communication is working, the Test Key feature can be used to cause the URs to use a fixed security key for all R-GOOSE publisher and subscriber groups.

Using EnerVista UR Setup software:

Select Settings -> Product Setup -> Security M2M -> Use Test Key and then change the value to "Yes". Do this for both the publisher and subscriber URs.

The R-GOOSE messages on the network will now contain data encrypted with the test key.

The Use Test Key settings in both URs must be set back to "No" before continuing.

6.4.9.3 CERTIFICATES

To use real keys provided by the KDC server, instead of the built-in test key, the UR must use X.509 digital security certificates. Each UR contains sample certificates that can be used for testing secure R-GOOSE. The UR can also be configured to retrieve certificates from a SCEP server, which is necessary before actual deployment. Optionally the UR can be configured to check certificates using an OCSP server. Windows Server NDES provides SCEP and OCSP server services.

6.4.9.3.1 USING SAMPLE CERTIFICATES

From the factory, each UR contains a sample client certificate file and a sample CA certificate file. These two files are the same in all URs. In order to establish a chain of trust between the URs and the Garibaldi KDC, the UR CA certificate file, ca.pem, must be loaded into Garibaldi. The UR CA sample certificate can be obtained from any one of the URs by following the procedure in “USING UR SAMPLE CERTIFICATES”. The ca.pem file must then be loaded into the Garibaldi KDC.

After this process is completed, the URs will be able to authenticate with Garibaldi and obtain security keys using network GDOI “Pull” requests. SCEP and OCSP are not required. However, in a fully secure system, certificates must be obtained by the UR from a SCEP server. When the UR successfully receives certificates from a SCEP server, it deletes the sample certificates.

6.4.9.3.2 USING SCEP

For an actual deployment, the URs should be configured to obtain certificates from a SCEP server that is part of an existing PKI. There are many SCEP related settings that must be set correctly before the UR “Retrieve Certificates” command can be issued. Detailed descriptions of these settings are in “SCEP Configuration”.

The following is a sample UR configuration that works with Windows Server NDES:

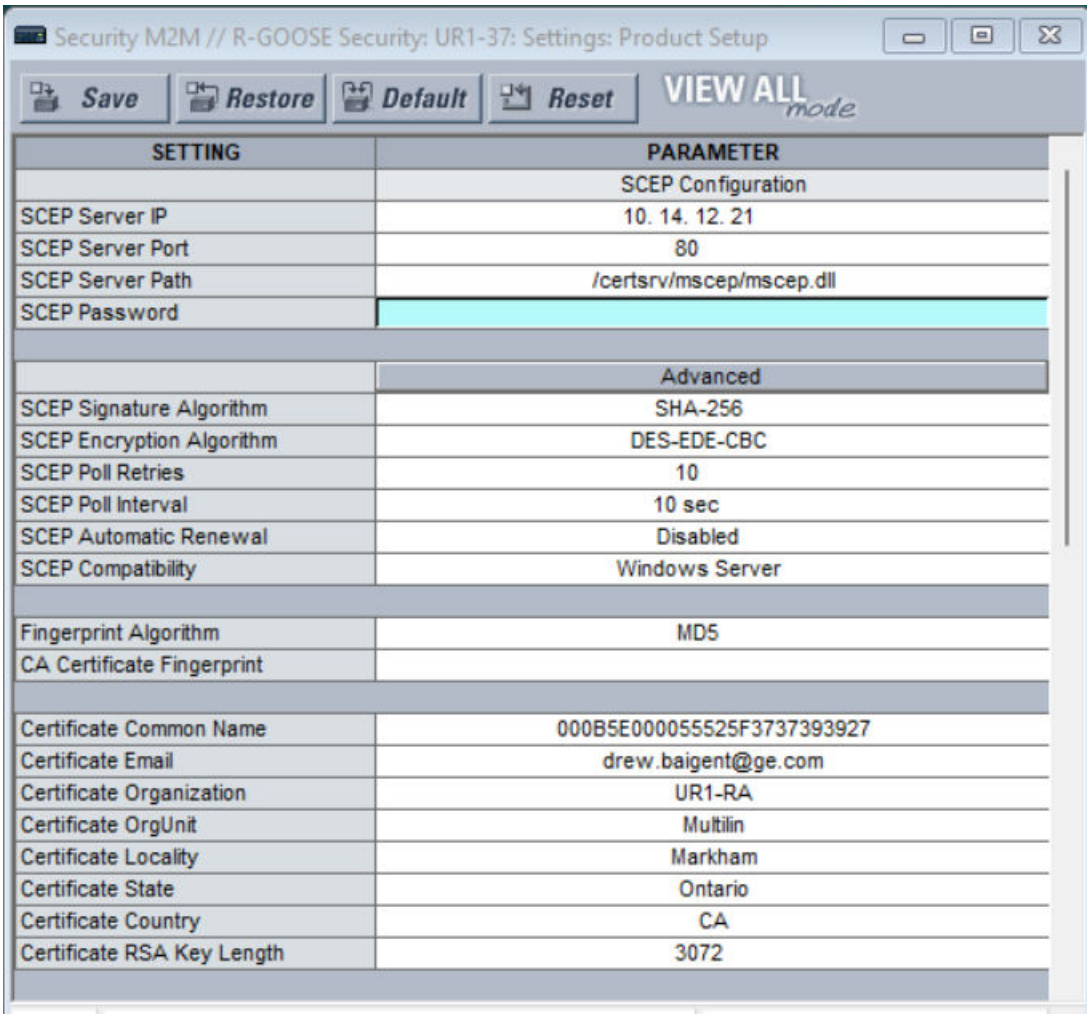

SETTING	PARAMETER
	SCEP Configuration
SCEP Server IP	10. 14. 12. 21
SCEP Server Port	80
SCEP Server Path	/certsrv/mscep/mscep.dll
SCEP Password	
	Advanced
SCEP Signature Algorithm	SHA-256
SCEP Encryption Algorithm	DES-EDE-CBC
SCEP Poll Retries	10
SCEP Poll Interval	10 sec
SCEP Automatic Renewal	Disabled
SCEP Compatibility	Windows Server
Fingerprint Algorithm	MD5
CA Certificate Fingerprint	
Certificate Common Name	000B5E000055525F3737393927
Certificate Email	drew.baigent@ge.com
Certificate Organization	UR1-RA
Certificate OrgUnit	Multilin
Certificate Locality	Markham
Certificate State	Ontario
Certificate Country	CA
Certificate RSA Key Length	3072

Figure 186: SCEP Server Configuration

The SCEP Password and CA Certificate Fingerprint settings must be obtained from the SCEP server. An example of this is given in "SCEP SERVER CHALLENGE PASSWORD AND FINGERPRINT (THUMBPRINT) EXAMPLE". Note that it is possible to obtain only one set of certificates with each challenge password issued by the SCEP server. That is, each password can be used to successfully obtain a certificate only once.

Once the above settings are saved, use the "Retrieve Certificates" command button to make the UR request certificates from the SCEP server. Repeat this for the other UR, using a new challenge password.

6.4.9.3.3 USING OCSP

OCSP is used to check the online status of certificates. It is optional. To disable OCSP, the OCSP Server IP setting should be set to “0.0.0.0”. OCSP is used by the UR to check the status of the Garibaldi KDC certificate during the authentication phase of each security key Pull request.

The following is a sample UR configuration that works with Windows Server NDES:

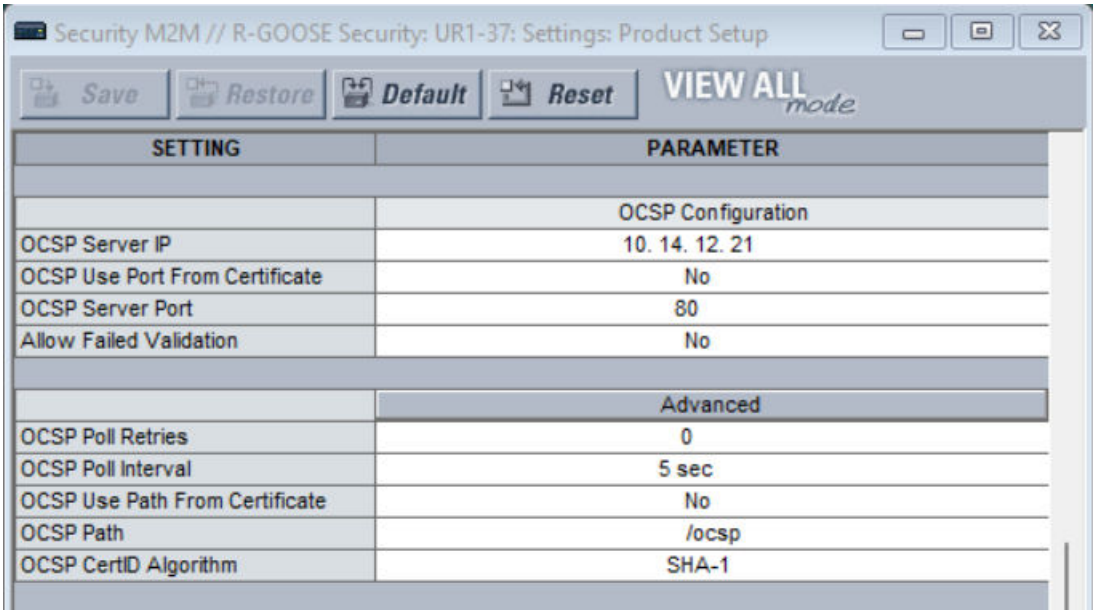

Figure 187: OCSP Server Configuration

Detailed descriptions of these settings are given in “OCSP Configuration”.

6.4.9.4 UR GDOI CONFIGURATION

The KDC Server IP 1 setting must be set to the IP address of the computer running the Garibaldi KDC.

6.4.9.5 KDC CONFIGURATION

The KDC must be installed and configured following the Garibaldi KDC Installation and User Guides.

As described above, the UR CA certificate file must be loaded into the Garibaldi KDC.

The CID file for at least the UR R-GOOSE publisher must be loaded into the Garibaldi KDC. The CID file for the UR R-GOOSE subscriber can optionally be loaded so that the KDC configuration contains a complete list of the configured devices.

6.4.9.6 STATUS OF SECURITY KEYS IN THE URS

The status of the Security Associations between the URs and the KDC can be seen on a webpage available on each UR. There should always be at least one “ACTIVATED” Security Association which contains the security key currently in use by the publisher and subscriber URs.

M2M Security Status - IEC 62351-9

Click Here For The Main Menu

KDC Transaction Information	
Pull Request Sent	1408
Push Received	0
Current Active KDC	KDC 1
OCSP Status of KDC Certificate	Valid
Last OCSP Check of KDC Certificate	Oct 23 2025 07:44:34

Publisher Group 1 (Signature & Encryption)

IP: [232.147.120.1], DataSet: [Rly147Master/LLN0.TT6DataSet1]

SA	Current	State	Time to Activate	Time to Expire	KDA	SPI	Life	ATD
1	>>>>	ACTIVATED	--	1127	0	0xa0c1423d	1661	0
2		PENDING	1057	--	0	0x2a264d8f	1800	1521
3		INVALID	--	--	0	0x00000000	0	0
Pull request not scheduled.								
Encryption Algorithm: AES-CBC-256 Authentication Algorithm: HMAC-SHA256-256								

Figure 188: M2M Security Status - IEC 62351-9

Detailed descriptions of these settings are given in “OCSP Configuration”.

6.5 RADIUS SERVER CONFIGURATION

The following procedure is an example of how to set up a simple RADIUS server. You install the RADIUS server software on a separate computer. In this example, we use FreeRADIUS third-party software.

1. Download and install FreeRADIUS from **www.freeradius.org as** the RADIUS server. This is a Windows 32-bit installation that is known to work. If you try another third-party tool and it does not work, use the FreeRADIUS software.
2. Open the `radiusd.conf` file in the `<Path_to_Radius>\etc\raddb folder`
3. Locate the **bind_address** field and enter your RADIUS server IP address.

   Text editor software that supports direct editing and saving of UNIX text encodings and line breaks, such as EditPad Lite, is needed for this editing.
4. In the `users.conf` file in the `<Path_to_Radius>\etc\raddb` folder, add the following text to configure a user **Tester** with an Administrator role.

```
Tester                          User-Password == "TesterPw1#"
                                GE-UR-Role = Administrator
```

5. In the `clients.conf` file in the `<Path_to_Radius>\etc\raddb` folder, add the following text to define the UR as a RADIUS client, where in this example the client IP address is 10.14.61.132, the shared secret specified here is also configured on the UR device for successful authentication, and the shortname is a short, optional alias that can be used in place of the IP address.

```
client 10.14.61.132 {
secret = Testing!123
shortname = ur1-test
}
```

   Alternatively, you may specify one secret for a network of clients, where in the example below the clients are all within the 10.14.61.0/24 subnet and the shared secret specified here is also configured on all the UR devices in the subnet for successful authentication.

```
client 10.14.61.0/24 {
secret = Testing!123
shortname = net1-test
}
```

6. In the `<Path_to_Radius>\etc\raddb` folder, create a file called dictionary.ge and add the following content.

```
# ##############################################################
# GE VSAs
##############################################################
VENDOR                          GE                      2910

# Management
authorization
BEGIN-VENDOR                    GE

# Role ID
ATTRIBUTE                       GE-UR-Role              1           integer
```

```
# GE-UR-ROLE values
VALUE GE-UR-Role              Administrator           1
VALUE GE-UR-Role              Supervisor              2
VALUE GE-UR-Role              Engineer                3
VALUE GE-UR-Role              Operator                4
VALUE GE-UR-Role              Observer                5

END-VENDOR                    GE
#################################################################
```

7. In the dictionary file in the `<Path_to_Radius>\etc\raddb` folder, add the following line.

   `$INCLUDE dictionary.ge`

   For example, the file can look like the following:

   `$INCLUDE ../share/freeradius/dictionary`

   `$INCLUDE dictionary.ge`

8. For the first start, run the RADIUS server in debug mode to ensure that there are no compiling errors.

   `<Path_to_Radius>/start_radiusd_debug.bat`

9. Set up the RADIUS parameters on the UR as follows.
   a. If logging in, select **Device** for the **Authentication Type**, and use `Administrator` for the **User Name**. The default password is `ChangeMe1#`.
   b. Access **Settings > Product Setup > Security**.
   c. Configure the IP address (10.14.61.122 in this example) and ports (default values in this example) for the RADIUS server. Leave the GE vendor ID field at the default of `2910`.
   d. Update the RADIUS shared secret (`Testing!123` in this example) as specified in the clients.conf file. Restart the relay for the IP address and port changes to take effect.

10. Verify the operation by loging in to the UR software as follows.
    a. In the login window, select **Server** as the **Authentication Type**
    b. Enter the user name (for example user name `Tester` with password `TesterPw1#`).
    c. Check that the RADIUS server log file shows the access with an `Access-Accept` entry.

CHAPTER 7

PROCESS BUS MODULE

7.1 CHAPTER OVERVIEW

This chapter contains the following sections:

Chapter Overview 321
Overview 322
Parallel Redundancy Protocol (PRP) 323
High-availability seamless redundancy (HSR) 325
Process Bus Settings 327
SV Stream Configuration 333
Remote resources configuration 350

7.2 OVERVIEW

Note:
This feature requires a Process Bus Module (order code 85, 86, or 87).

Note:
Process Bus GOOSE requires IEC 61850 and IEEE 1588 software options

The UR provides a digital process bus by use of a Process Bus Module. A digital process bus enables digital transmission of data between the switchyard and relays in a control house using communication cables instead of hard-wired connections.

The Process Bus Module supports the IEC 61850-9-2LE and IEC 61869 protocols, switched networks, and two redundancy protocols (Parallel Redundancy Protocol and High-Availability Seamless Redundancy). The module is used to transfer data streams in protection and control networks, including dataset samples referred to as sampled values (SVs), with the stability of redundancy.

A Process Bus Module with order code 85, 86, or 87 is distinct from the HardFiber Process Bus Module with order code 81. This section does not apply to the HardFiber module.

Configuration includes that for redundancy and synchronization of time-clock sources because data transfer occurs among multiple devices.

Note:
For any device that is connected to a copper SFP of the Process Bus Module, set its port speed to Auto Negotiate. The copper SFP supports 100 Mbps and 1 Gbps speeds in auto-negotiate mode. If the device connecting to the Process Bus Module has a fixed port speed, does not support auto-negotiation, or its auto-negotiate is disabled, then the link speed of the copper SFP is fixed at 1 Gbps and it communicates only with a device that supports 1 Gbps.

7.3 PARALLEL REDUNDANCY PROTOCOL (PRP)

PRP enables seamless switchover and zero recovery time during a single network failure in substation automation networks. It ensures that critical data, such as GOOSE and sampled value (SV) data, are transmitted without delay in case of local area network (LAN) defects. In other words, with PRP functionality, the Process Bus Module can be connected to redundant LANs and work with zero recovery time.

PRP is supported to the IEC 62439-3:2012 standard, Clause 4.

The figure shows that PRP achieves redundancy by using a combination of frame and LAN duplication. Identical frames, here labeled frames A and B, are sent on two independent networks that connect source and destination. The frames carry GOOSE or supervisory data. Under normal circumstances, both frames reach the destination and one of them is sent up the stack to the destination application, while the other frame is discarded. If an error occurs in one of the networks and traffic is prevented from flowing on that path, connectivity is provided by the other network to ensure continuous communication. When designing this network care was taken to ensure that there is no single point of failure in the two LANs, such as a common power supply, as such scenarios can bring down simultaneously both LANs.

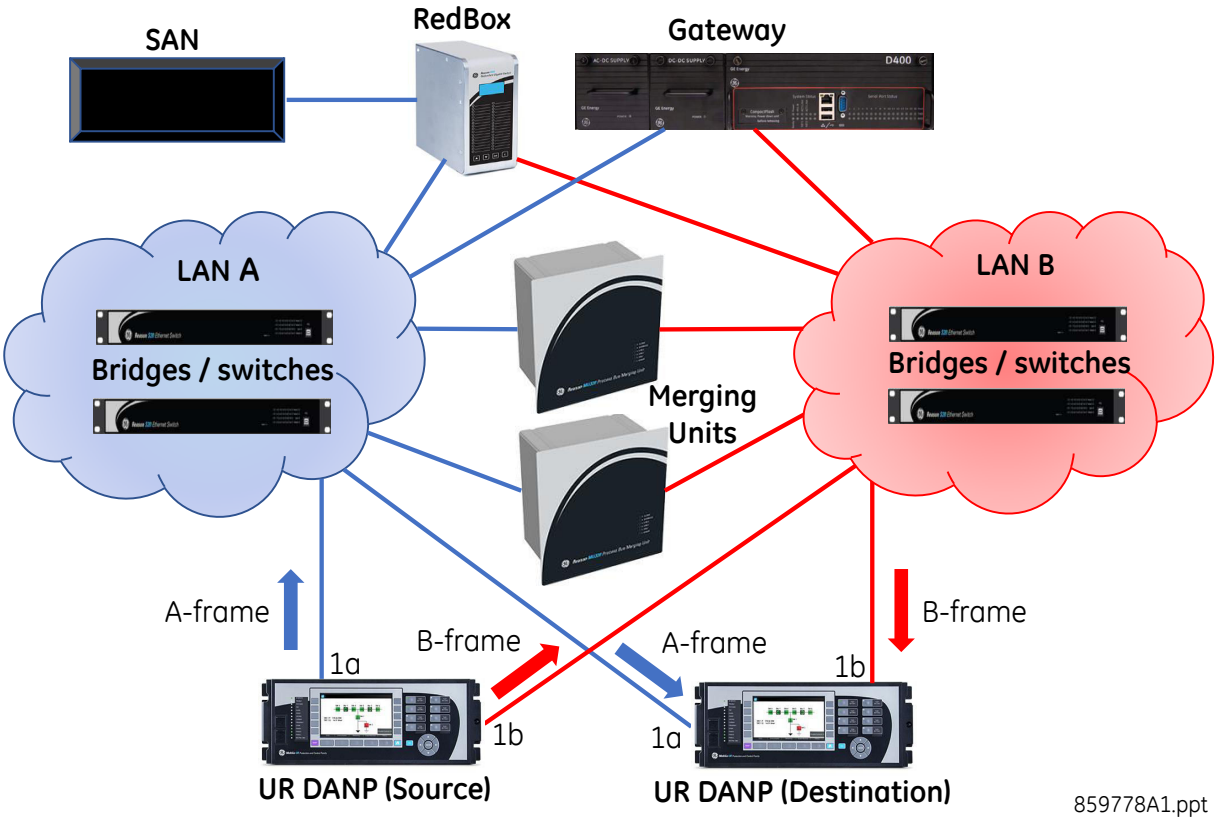

Figure 189: PRP redundant network example

PRP implements redundancy in the nodes rather than in the network by using specialized nodes called Doubly Attached Nodes Running PRP (DANP) for handling the duplicated frames. The figure shows an example. Each DANP node has two ports that are connected to the two independent LANs with similar (but not necessarily identical) topology. A source DANP sends identical frames over both LANs and a destination DANP receives both frames from the two LANs within a certain time period, consumes the first frame, and discards the duplicate frame.

Each UR device in this example implements PRP on ports 1a and 1b of the Process Bus Module. Both URs require a Process Bus Module. Ports 1a and 1b act as DANP in the PRP network. With two ports required, Process Bus Modules with order code 85, 86, or 87 can be used. While this example shows a UR as receiving the frames, the receiver can be a merging unit or UR.

A device with only one port, such as a printer or computer, is called a Singly Attached Node (SAN). It is a node with non-redundant network adapters. A SAN can communicate with other SANs and DANPs on the same LAN. When a SAN is attached to a redundant LAN by a Redundancy Box (RedBox) device, the SAN can communicate with all DANPs and SANs in both LANs. In other words, if redundancy for a SAN is required, the SAN is connected to both LANs through a RedBox.

A merging unit (MU), such as the GE MU320, is an interface between analog and digital worlds. With an MU, the analog signals from the CTs and VTs in the yard are converted to digital signals and transmitted via the sampled value (SV) network communication protocol.

The bridges shown are network switches that connect devices participating in the PRP network and otherwise do not have an active role in PRP.

7.4 HIGH-AVAILABILITY SEAMLESS REDUNDANCY (HSR)

Similar to PRP, High-Availability Seamless Redundancy (HSR) enables seamless switchover and zero recovery time during a single network failure in substation automation networks. It ensures that critical data, such as GOOSE and SV data, are transmitted without delay in case of LAN defects.

HSR is supported to IEC 62439-3, Clause 5. SV data can be received from merging units meeting IEC 61869-9.

HSR is used in network topology with rings and rings of rings. All nodes in the ring are doubly attached. The figure shows an example. The Doubly Attached Node with HSR (DANH) is a node that has two ports interconnected by full-duplex links and participates in the HSR ring. The source node receives a frame from its upper layer, inserts an HSR tag to identify duplicates, and sends it over its two ports in different directions, shown by the red and blue arrows. In a normal, fault-free state, the identical frames reach the destination DANH within a certain interval, the destination DANH removes the HSR tag, sends the first frame up the stack to the destination application and discards the second frame. If an error occurs in one of the network nodes and traffic cannot flow on that path, connectivity is provided through the other direction and ensures continuous communication.

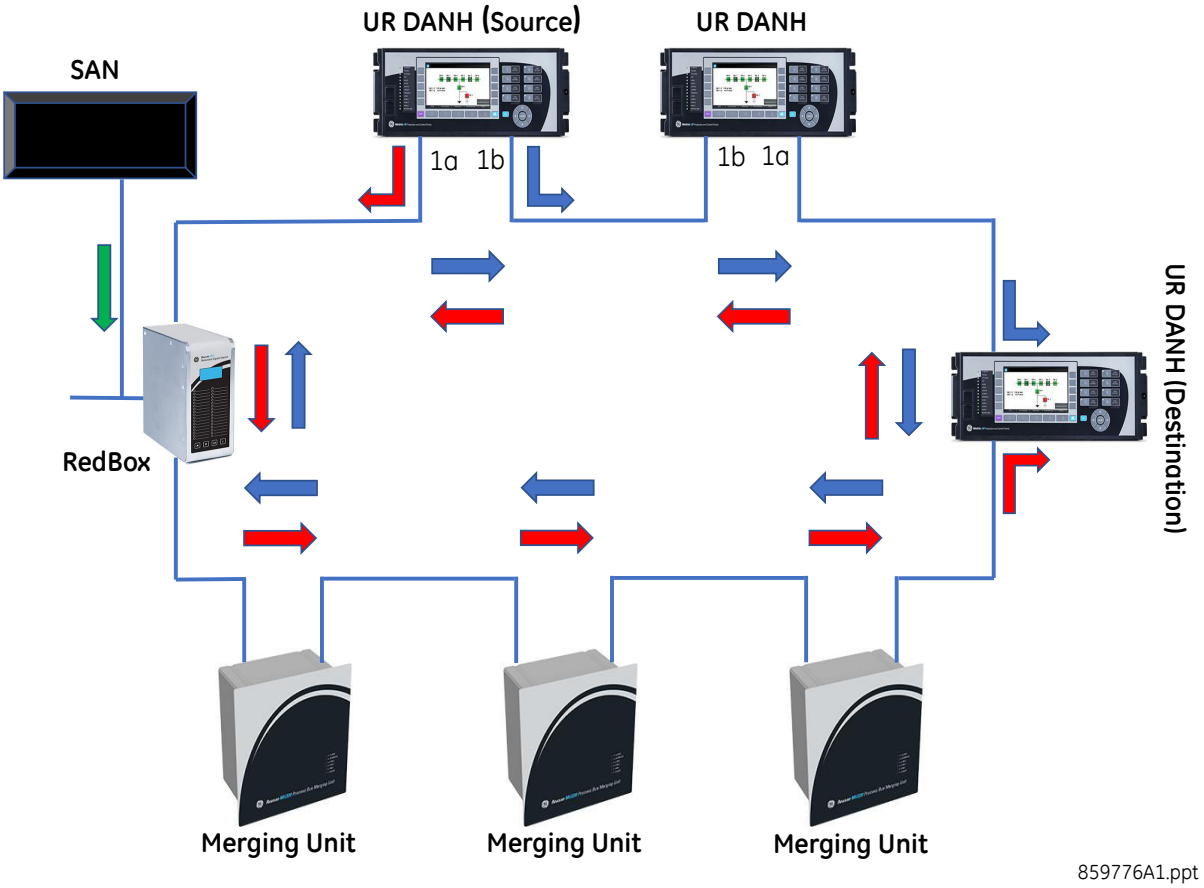

Figure 190: HSR single-ring configuration example

A Singly Attached Node, or SAN, such as a computer or printer, is a node with non-redundant network adapters. It uses a redundancy box (RedBox) to connect to the ring.

A merging unit (MU), such as the GE MU320, is an interface between analog and digital worlds. With an MU, the analog signals from the CTs and VTs in the yard are converted to digital signals and transmitted via the sampled value (SV) network communication protocol.

A UR with the Process Bus Module implements either single or dual HSR capability. It supports hierarchical ring topologies, such as connected rings, mesh topology, and an HSR ring in a PRP network.

In single HSR configuration, ports 1a and 1b of the Process Bus Module act as DANH, and any other ports on the Process Bus Module are disabled. Point-to-point configuration is not available. For single HSR, Process Bus Module 85, 86, or 87 can be used.

In dual HSR configuration, the UR to connect to two independent HSR rings. Ports 1a and 1b form one DANH node, and ports 3a and 3b form the second DANH node. Any other ports on the module are disabled. Traffic from HSR-1 ring is not forwarded to the HSR-2 ring and vice versa. The UR does not facilitate any message communication between the two independent HSR rings. In dual HSR, with four ports required, a Process Bus Module with order code 86 or 87 can be used.

While the UR does not provide RedBox functionality, an HSR ring can be connected to a PRP network using two RedBoxes, one for each redundant LAN of the PRP network. The RedBoxes are configured to handle PRP frames on the interlinks and HSR frames on the HSR ring. As per the IEC 62439-3:2016 standard, up to seven PRP networks can be connected to the same HSR ring.

While the UR does not provide QuadBox functionality, a QuadBox can be added to interconnect two HSR rings, which is beneficial when traffic on a single ring exceeds the ring's capability.

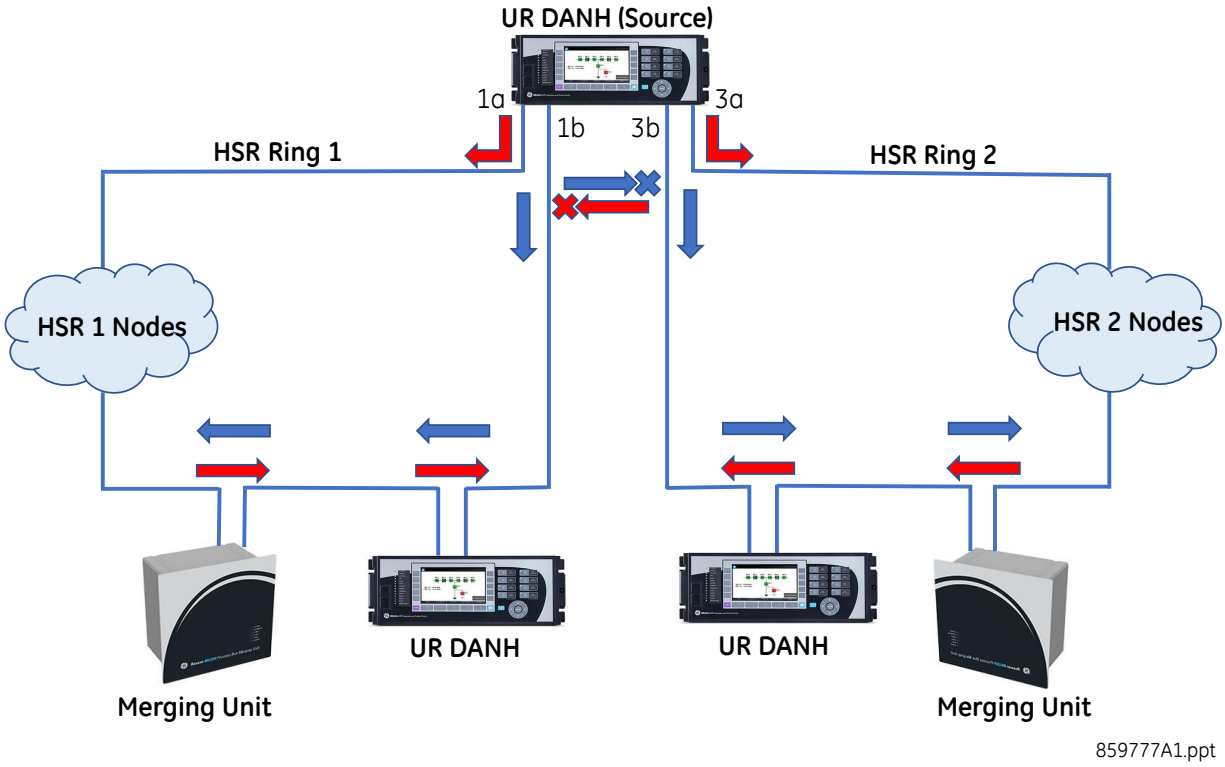

Figure 191: Dual HSR, double-ring configuration example

7.5 PROCESS BUS SETTINGS

Setting path: ***SETTINGS > PROCESS BUS MODULE > GENERAL***

■ GENERAL ■	NETWORK CONFIG: INDEPENDENT	Range: INDEPENDENT, PRP, HSR, Dual HSR
	PRP SUPV MCST ADDR: 01154E000100	Range: 01 15 4E 00 01 00 to 01 15 4E 00 01 FF
	HSR-1 SUPV MCST ADDR: 01154E000100	Range: 01 15 4E 00 01 00 to 01 15 4E 00 01 FF
	HSR-2 SUPV MCST ADDR: 01154E000101	Range: 01 15 4E 00 01 00 to 01 15 4E 00 01 FF
	PORT 1a FUNCTION: Enabled	Range: Disabled, Enabled
	⇩	
	PORT 4b FUNCTION: Enabled	Range: Disabled, Enabled
	SV TRBL PRT BLOCK: Global	Range: Global, Partial
	SV TRBL CONT OP BLK: Off	Range: FlexLogic operand
	SV DELAY ALARM: 6.0 ms	Range: 1.0 ms to 10.0 ms in steps of 0.1 ms
	QUALITY CHECK: Reject Questionable	Range: Reject Questionable, Accept Questionable
	ANTI-ALIASING FILTER: Disabled	Range: Disabled, Enabled
	SMPSYNCH CHECK: Global	Range: Global, Local, Local-87L, Any
	Fallback GmID: 00 00 00 00 00 00 00 00	Range: 8 Octet string
	TARGET: Click to view or edit selected Targets	Range: List of available Targets. Access in EnerVista.
	EVENTS: Click to view or edit selected Events	Range: List of available FlexLogic operand types from SV Stream Processing. Access in EnerVista.

NETWORK CONFIG

This setting specifies the network configuration and redundancy for the Process Bus Module. If set to `INDEPENDENT`, all ports on the Process Bus Module are enabled, and the Process Bus Module can be connected directly to merging units (MUs) or to a switch without redundancy. To enable and disable individual ports on the Process Bus Module in a point-to-point (PPP) network, use the ***PORT x FUNCTION*** settings. If set to `PRP` or `HSR`, ports 1a and 1b are enabled. The ***PORT 1a FUNCTION*** and ***PORT 1b FUNCTION*** settings change, depending on usage. If set to `Dual HSR`, ports 1a and 1b are enabled for one HSR ring. When using a Process Bus Module, ports 3a and 3b are enabled for another HSR ring.

PRP SUPV MCST ADDR

This setting changes the multicast address used by the Parallel Redundancy Protocol (PRP) supervision frames. Configure all DANP devices in the PRP network with the same multicast address for the network supervision to operate properly. You can edit this setting when the ***NETWORK CONFIG*** setting is set to *PRP*.

HSR-1 SUPV MCST ADDR

This setting changes the multicast address used by High-Availability Seamless Redundancy ring one (HSR-1 ports 1a and 1b) supervision frames, for single HSR configuration. Configure all DANH devices in the HSR network with the same multicast address for the network supervision to operate properly. This setting is editable when the ***NETWORK CONFIG*** setting is set to *HSR* or *Dual HSR*.

HSR-2 SUPV MCST ADDR

This setting changes the multicast address used by the HSR-2 (ports 3a and 3b) supervision frames for the second DANH in a Dual HSR configuration. Configure all DANH devices in the HSR network with the same multicast address for the network supervision to operate properly. You can edit this setting when the ***NETWORK CONFIG*** setting is set to *Dual HSR*.

PORT 1a to 4b FUNCTION

These settings manually enable and disable Process Bus Module Ethernet ports. Typically, Process Bus Module ports are order-code dependent, and the *INDEPENDENT* network configuration enables all the ports by default. These settings allow individual ports to be enabled and disabled individually. To connect only a few of the ports, other ports can be disabled to avoid a `PBEthPort-# Offline` self-test error. The fields active depend on order code and ***NETWORK CONFIG*** setting. For order code 85, ports 1a, 1b, 3a, and 3b are available to be turned on or off. For order codes 86 and 87, all eight ports can be available to be turned on or off.

When a port is disabled, all transmitting and receiving traffic on the port is blocked. Relay restart is not required when changing these port function fields.

SV TRBL PRT BLOCK

In case of loss of any subscribed SV streams or due to bad quality of any subscribed SV frames, the relay's protection functions need to be blocked to avoid undesired operation. This setting specifies the type of blocking applied. When set to *Global*, all the protection functions that utilize the sampled values are blocked. Communications, data logging, and oscillography remain functional. Availability of switchgear control is determined by the SV TRBL CONT OP BLK operand. When set to *Partial*, only those protection functions are blocked that utilize the sampled values from the affected SV stream. All other protection functions remain operational.

SV TRBL CONT OP BLK

This setting selects a FlexLogic operand that determines whether the contact outputs are blocked or not. When the state of the operand is low, the contact outputs are not blocked when there is a loss of any SV stream or received SV frames have bad quality. You can enable switchgear control through contact outputs during SV stream trouble. When the operand is high, the contact outputs are blocked when there is a loss of any SV stream or received SV frames have bad quality and the switchgear control is not available through contact outputs during SV stream trouble.

SV DELAY ALARM

The sampled value (SV) frames may arrive with a delay from the MUs, which can be due to the MU performance or different network path delays. This setting specifies the maximum delay expected between the time a sample is taken at the MU and the time of arrival of that SV message. Sampling time is estimated based on the UR Process Bus Module clock and the sampling rate. If the calculated frame delay is more than this setting value, the RxSV# Delay Alm On FlexLogic operand asserts. The setting value needs to be calibrated and set at the commissioning time for the given network topology. An alarm in runtime indicates the network performance is degrading over the time. In short, this setting specifies how long the relay waits to declare that a sample is delayed. Protection is not blocked by this setting.

QUALITY CHECK

Flags are used to assess the quality of sampled value data to ensure protection. This setting specifies how the sampled values are processed by the relay when the associated ***q.validity*** is set to `Questionable`. Quality is checked per AC bank, not per SV stream. When set to `Reject Questionable`, the questionable data is considered invalid and the frame is rejected. Only Good quality data is accepted. Set it to `Accept Questionable` only if it is absolutely known that questionable quality from a MU is not compromising the quality of the data for various applications. When set to `Accept Questionable`, both the *Good* and *Questionable* quality data are accepted.

ANTI-ALIASING FILTER

This setting activates or deactivates the anti-aliasing filter that conditions the sampled values from the Process Bus network. If the Merging Unit providing sampled values is applies an anti-aliasing filter, this setting must be disabled. Otherwise, this setting can be enabled to apply filtering of the received sampled values. When enabled, the device applies a low-pass-filter, which attenuates all the harmonics above the 15th order.

SMPSYNCH CHECK

This setting is a time synchronization check. It specifies the time synchronization source of an SV stream expected by the Process Bus Module.

When set to `Global`, only the SV streams with ***SmpSynch*** indicating a `Global (2)` value are accepted. A stream with a ***SmpSynch*** value other than `Global (2)` is rejected.

When set to `Local`, all SV streams with ***SmpSynch*** indicating a `Local (1)` or `Global (2)` area clock are accepted.

When set to `Any`, any ***SmpSynch*** value in the range of 0 to 254 is acceptable. Streams outside the range are rejected.

When all the subscribed MU streams support IEC61850 Ed 2.1, an additional acceptance criterion as outlined in the description of setting Fallback GmID, has been added from UR version 8.5 and onwards

Fallback GmID

In the RxSV streams supporting IEC61850 Ed 2.1, the *SynchSrcID* attribute is used as acceptance criteria for the RxSV streams, which are used by the Protection elements. In the absence of Global Clock, this setting indicates the GmID of the local clock to which all subscribed MUs have to be synchronized for RxSV streams to be accepted. The effect of the ***Fallback GmID*** is explained as below:

When ***SMPSYNCH CHECK*** is set to `Global`, only the RxSV streams with SmpSynch attribute indicating a `Global (2)` value are accepted. SynchSrcID(GmID) Check is not done as all the streams accepted are Globally synchronized.

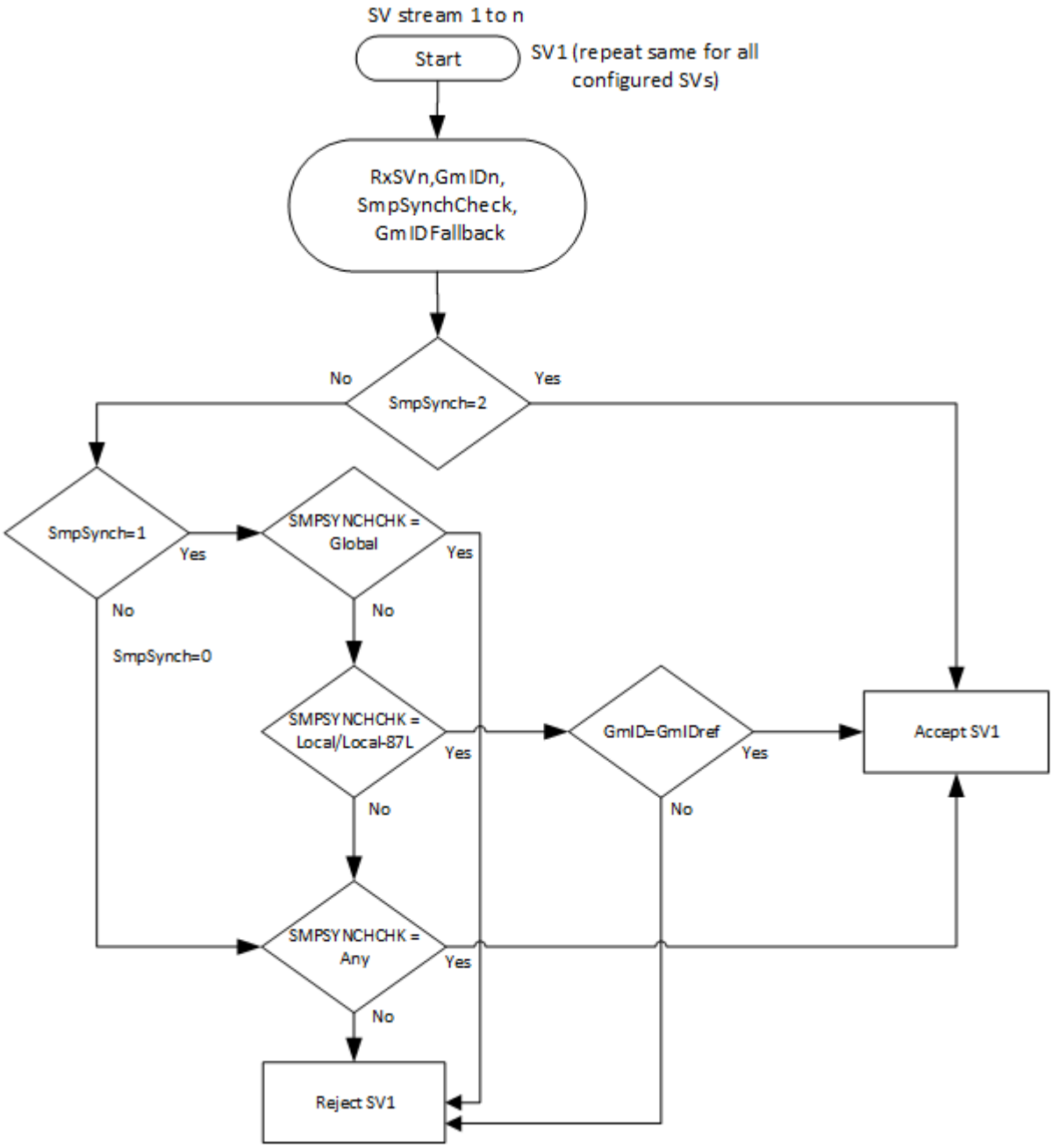

Figure 192: SympSynchCheck with GmID Flowchart

Effect of SMPSYNCH CHECK setting and attribute

MU Smpsynch Attribute	UR Setting: SMPSYNCH CHECK		
	Global	Local	Any
Global	Protection elements operational	Protection elements operational	Protection elements operational
Local	Protection elements blocked	Protection elements operational if GmId=GmIDRef	Protection elements operational
Any	Protection elements blocked	Protection elements blocked	Other protection elements operational

TARGET

With this setting, you can select the target messages of the affected SV stream(s) to be displayed on the front panel. The target resets itself once the issue with the SV stream is resolved. Note that a selected target message applies to all the configured SV streams. For example, if target message ***RxSV DELAY ALM ON***' is selected, then a target displays when any of the configured SV streams has an active SV Delay Alarm. When disabled, no target message displays on the front panel.

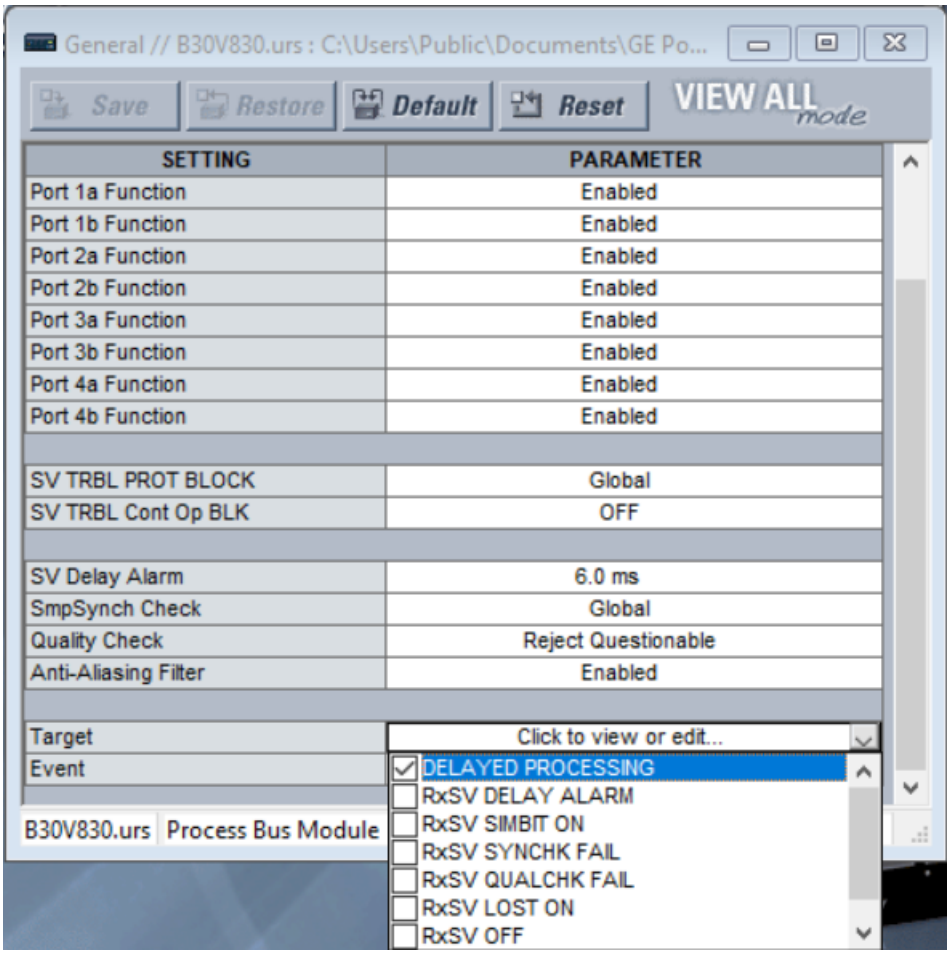

Figure 193: FlexLogic operand target selection

EVENTS

With this setting, you can select the flexlogic operands, which will generate the events of the affected SV stream(s), to be recorded in the event recorder. Note that a selected event from the menu applies to all the configured SV streams. When disabled, no event is recorded in the event recorder.

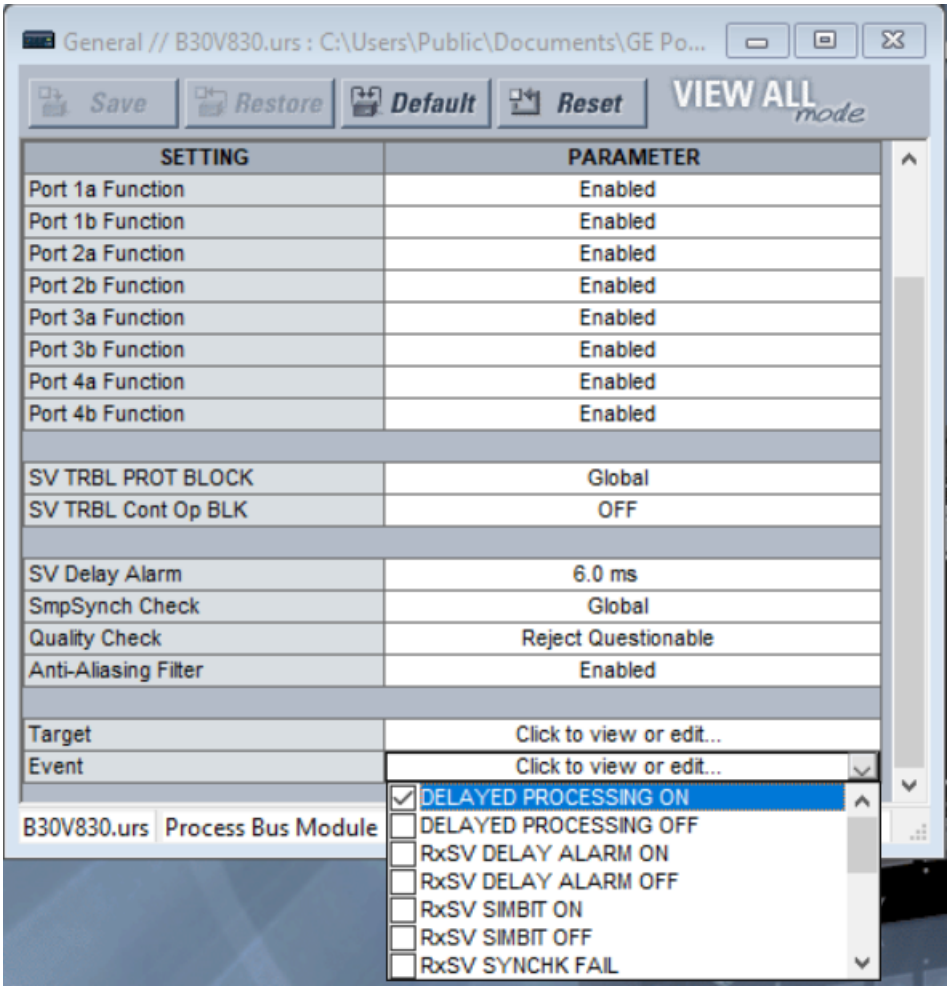

Figure 194: FlexLogic operand event selection

Note:
Choose carefully the events to be recorded in the event recorder. If an SV stream is noisy, there is risk of event recorder overflow. Apart from testing, select a minimal number of events following relay commissioning

Important!

Note:
*The assertion of the **Delayed Processing On** operand can be observed only in the event recorder because the oscillography is not running when the SV samples are delayed enough to trigger the assertion of this operand.*

7.6 SV STREAM CONFIGURATION

The UR platform can subscribe up to eight sampled value (SV) streams. Up to six banks and up to six sources can be used for protection. Reception of a sampled value (RxSV) can be enabled in the IEC 61850-9-2LE or IEC 61869-9/13 format.

These settings are available in the EnerVista software and can also be configured in the software using a CID file.

The path is ***Settings > Process Bus Module > SV Stream Config***. If a message displays that the data cannot be opened, it can mean that access timed out. In this case, try again.

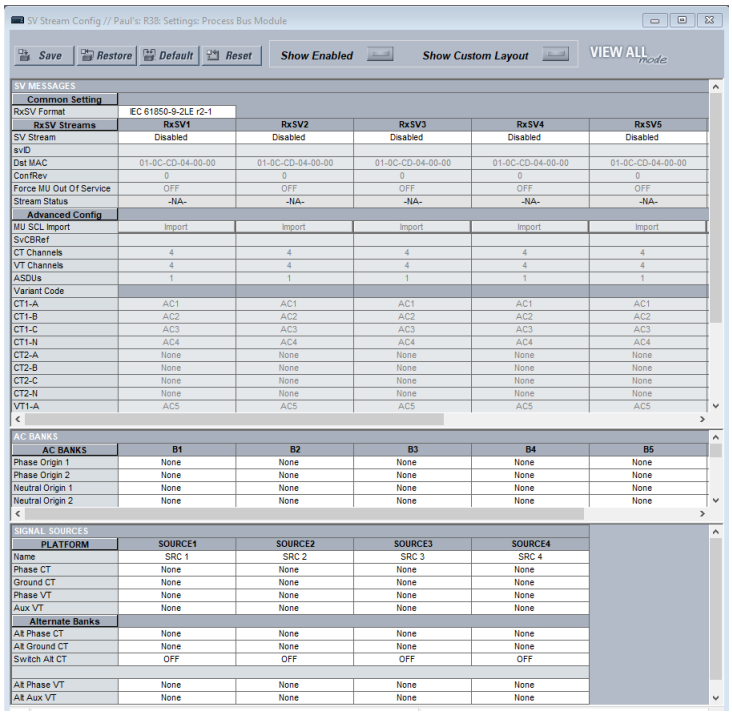

Figure 195: Example of sampled values configuration

The configuration window is explained as follows:

- The four areas of the window (Common Setting, RxSV Streams, Advanced Config, AC Banks, and Sources) collapse and expand by clicking their buttons
- A column collapses and expands by clicking its heading
- The **Show Enabled** button toggles active/configured content
- The **Show Custom Layout** button toggles changes made to formatting, such as column width. Such changes can be made with or without the button active, and they are retained when the panel is closed.
- There are up to eight RxSV, eight AC Bank, and six Source columns. A B30 can have up to 24 RxSV, 30 AC Bank (24 CT and six VT), and 30 Source columns.
- With IEC 61869-9, the Advanced Config fields populate and are read-only when importing a file
- Rules are enforced and the configuration cannot be saved until the rules are followed. For example, Neutral Origin 1 and Neutral Origin 2 cannot be mapped to the same SV stream. See the troubleshooting section that follows.
- The window is configured based on the separate areas and not based on columns. For example, stream RxSV1 is configured in the SV Messages area of the window, not the first column in the entire window. Or for example, Source1 in the first column can be configured to use AC Bank B2 in the second column.
- The following example shows that Source1 at the bottom of the window is set to map to AC Bank B2, which is mapped to the first stream (RxSV1) and its available VT1 phase voltage and VT2 neutral voltage.

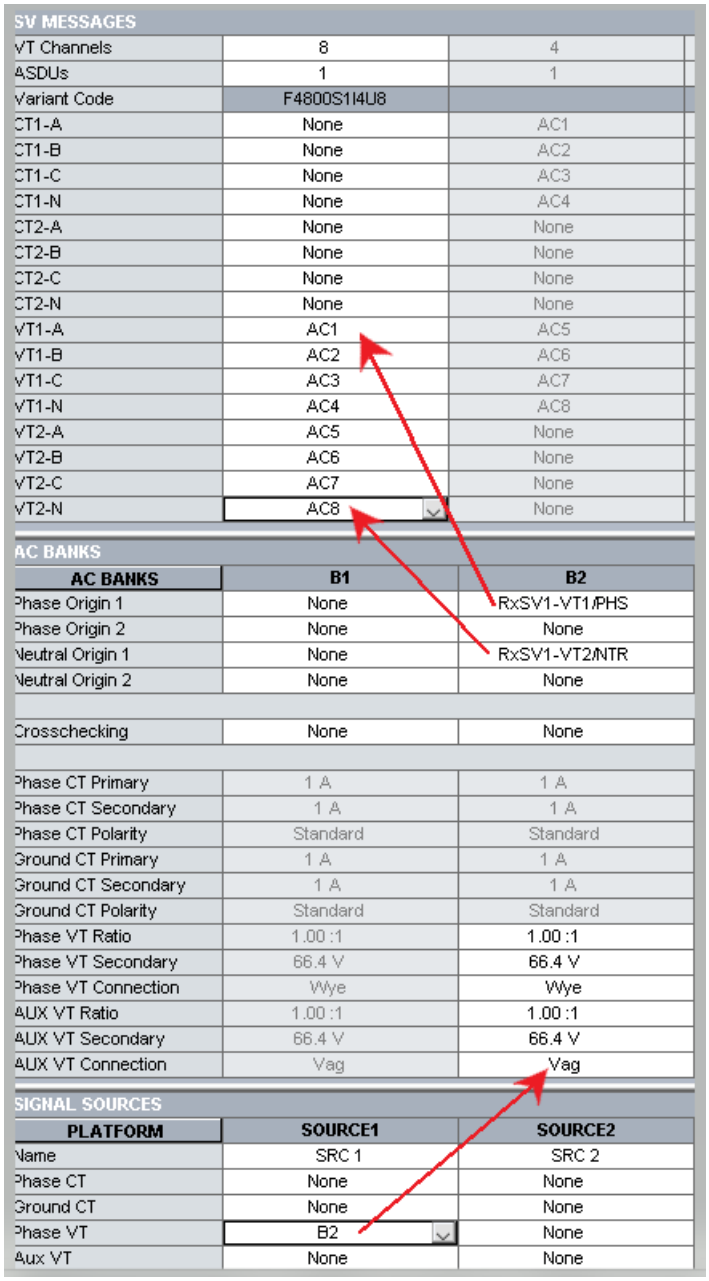

SV MESSAGES		
VT Channels	8	4
ASDUs	1	1
Variant Code	F4800S1I4U8	
CT1-A	None	AC1
CT1-B	None	AC2
CT1-C	None	AC3
CT1-N	None	AC4
CT2-A	None	None
CT2-B	None	None
CT2-C	None	None
CT2-N	None	None
VT1-A	AC1	AC5
VT1-B	AC2	AC6
VT1-C	AC3	AC7
VT1-N	AC4	AC8
VT2-A	AC5	None
VT2-B	AC6	None
VT2-C	AC7	None
VT2-N	AC8	None

AC BANKS		
AC BANKS	B1	B2
Phase Origin 1	None	RxSV1-VT1/PHS
Phase Origin 2	None	None
Neutral Origin 1	None	RxSV1-VT2/NTR
Neutral Origin 2	None	None
Crosschecking	None	None
Phase CT Primary	1 A	1 A
Phase CT Secondary	1 A	1 A
Phase CT Polarity	Standard	Standard
Ground CT Primary	1 A	1 A
Ground CT Secondary	1 A	1 A
Ground CT Polarity	Standard	Standard
Phase VT Ratio	1.00 :1	1.00 :1
Phase VT Secondary	66.4 V	66.4 V
Phase VT Connection	Wye	Wye
AUX VT Ratio	1.00 :1	1.00 :1
AUX VT Secondary	66.4 V	66.4 V
AUX VT Connection	Vag	Vag

SIGNAL SOURCES		
PLATFORM	SOURCE1	SOURCE2
Name	SRC 1	SRC 2
Phase CT	None	None
Ground CT	None	None
Phase VT	B2	None
Aux VT	None	None

Figure 196: Understanding SV configuration

- The UR allows switching AC banks (essentially streams) from the main measuring MU to the alternate measuring MU. Once an operand assigned to the ***SWITCH ALT CT/VT*** setting is logical *1*, the input data to this source is switched from the banks assigned to ***PHASE CT/GROUND CT*** to the banks assigned to ***ALT PHASE CT/ALT GROUND CT*** settings for current transformers. This is similar for voltage transformers.
- Banks assigned to the same function for the main and alternate input data have to have the same CT and VT nominals and connections, otherwise a warning is generated and switching functionality is prohibited. For example, banks assigned to the PHASE CT and ALT PHASE CT have to have same primary and secondary CT values.
- During switching from the main CT/VT input data to alternate input data and vice versa, all relay functions are blocked for two power cycles and metering data does not update
- See the Source Switching section under ***SETTINGS > SYSTEM SETUP > SIGNAL SOURCES*** in this manual for application examples of AC bank switching

An example of the configuration process is as follows:

1. Configure SV streams by importing an MU CID file. This populates the SV Messages area of the window.
2. Configure the Sources fields.
3. Map the AC Bank fields to the RxSV Stream fields.
4. Troubleshoot using the messages displayed during configuration and/or upon save so that the rules are followed. Saving frequently during configuration helps to deal with issues early.
5. Restart the relay for the changes to take effect.

The table outlines mapping examples using CT channels. VT channels are similar.

Scenario	AC Bank configuration	Advanced Config configuration
No CT signal in the SV stream	---	---
One neutral	Neutral Origin 1 = RxSV1-CT1/NTR	CT1-N maps to AC1
Two neutrals	Neutral Origin 1 = RxSV1-CT1/NTR Neutral Origin 2 = RxSV2-CT2/NTR	CT1-N maps to AC1 CT2-N maps to AC2
Three phases	Phase Origin 1 = RxSV1-CT1/PHS	CT1-A, B, C map to AC1, 2, 3
Three phases followed by one neutral	Phase Origin 1 = RxSV1-CT1/PHS Neutral Origin 1 = RxSV1-CT1/NTR	CT1-A, B, C, N map to AC1, 2, 3, 4
One neutral followed by three phases	Neutral Origin 1 = RxSV1-CT1/NTR Phase Origin 1 = RxSV1-CT2/PHS	CT1-N maps to AC1 CT2-A, B, C map to AC2, 3, 4
One neutral followed by three phases, then followed by one neutral	Neutral Origin 1 = RxSV1-CT1/NTR Phase Origin 1 = RxSV1-CT2/PHS Neutral Origin 2 = RxSV2-CT2/NTR	CT1-N maps to AC1 CT2-A, B, C, N map to AC2, 3, 4, 5
Three phases followed by one neutral, then another neutral	Phase Origin 1 = RxSV1-CT1/PHS Neutral Origin 1 = RxSV1-CT1/NTR Neutral Origin 2 = RxSV2-CT2/NTR	CT1-A, B, C, N map to AC1, 2, 3, 4 CT2-N maps to AC5
Two three-phases	Phase Origin 1 = RxSV1-CT1/PHS Phase Origin 2 = RxSV2-CT2/PHS	CT1-A, B, C map to AC1, 2, 3 CT2-A, B, C map to AC4, 5, 6
Three phases followed by one neutral, then another three phases	Phase Origin 1 = RxSV1-CT1/PHS Neutral Origin 1 = RxSV1-CT1/NTR Phase Origin 2 = RxSV2-CT2/PHS	CT1-A, B, C, N map to AC1, 2, 3, 4 CT2-A, B, C map to AC5, 6, 7
Three phases followed by another three phases, then one neutral	Phase Origin 1 = RxSV1-CT1/PHS Phase Origin 2 = RxSV2-CT2/PHS Neutral Origin 2 = RxSV2-CT2/NTR	CT1-A, B, C map to AC1, 2, 3 CT2-A, B, C, N map to AC4, 5, 6, 7
Three phases, one neutral, then another three phases and one neutral. See the following figure.	Phase Origin 1 = RxSV1-CT1/PHS Neutral Origin 1 = RxSV1-CT1/NTR Phase Origin 2 = RxSV2-CT2/PHS Neutral Origin 2 = RxSV2-CT2/NTR	CT1-A, B, C, N map to AC1, 2, 3, 4 CT2-A, B, C, N map to AC5, 6, 7, 8

SV MESSAGES		
Common Setting		
RxSV Format	IEC 61869-9 ed1.0	
RxSV Streams	**RxSV1**	**RxSV2**
SV Stream	Enabled	Enabled
svID		
Dst MAC	01-0C-CD-04-00-00	01-0C-CD-04-00-00
ConfRev	0	0
Force MU Out Of Service	OFF	OFF
Stream Status	-NA-	-NA-
Advanced Config		
MU SCL Import	Import	Import
SvCBRef		
CT Channels	4	8
VT Channels	4	4
ASDUs	1	1
Variant Code	F4800S1I4U4	F4800S1I8U4
CT1-A	AC1	AC1
CT1-B	AC2	AC2
CT1-C	AC3	AC3
CT1-N	AC4	AC4
CT2-A	None	AC5
CT2-B	None	AC6
CT2-C	None	AC7
CT2-N	None	AC8
VT1-A	AC5	AC9
VT1-B	AC6	AC10
VT1-C	AC7	AC11
VT1-N	AC8	AC12
VT2-A	None	None
VT2-B	None	None
VT2-C	None	None

AC BANKS		
AC BANKS	**B1**	**B2**
Phase Origin 1	RxSV1-CT1/PHS	None
Phase Origin 2	RxSV2-CT1/PHS	None
Neutral Origin 1	RxSV1-CT1/NTR	None
Neutral Origin 2	RxSV2-CT2/NTR	None
Crosschecking	None	None

Figure 197: Example three phases, one neutral, then three phases and one neutral

7.6.1 SV STREAM LOGIC

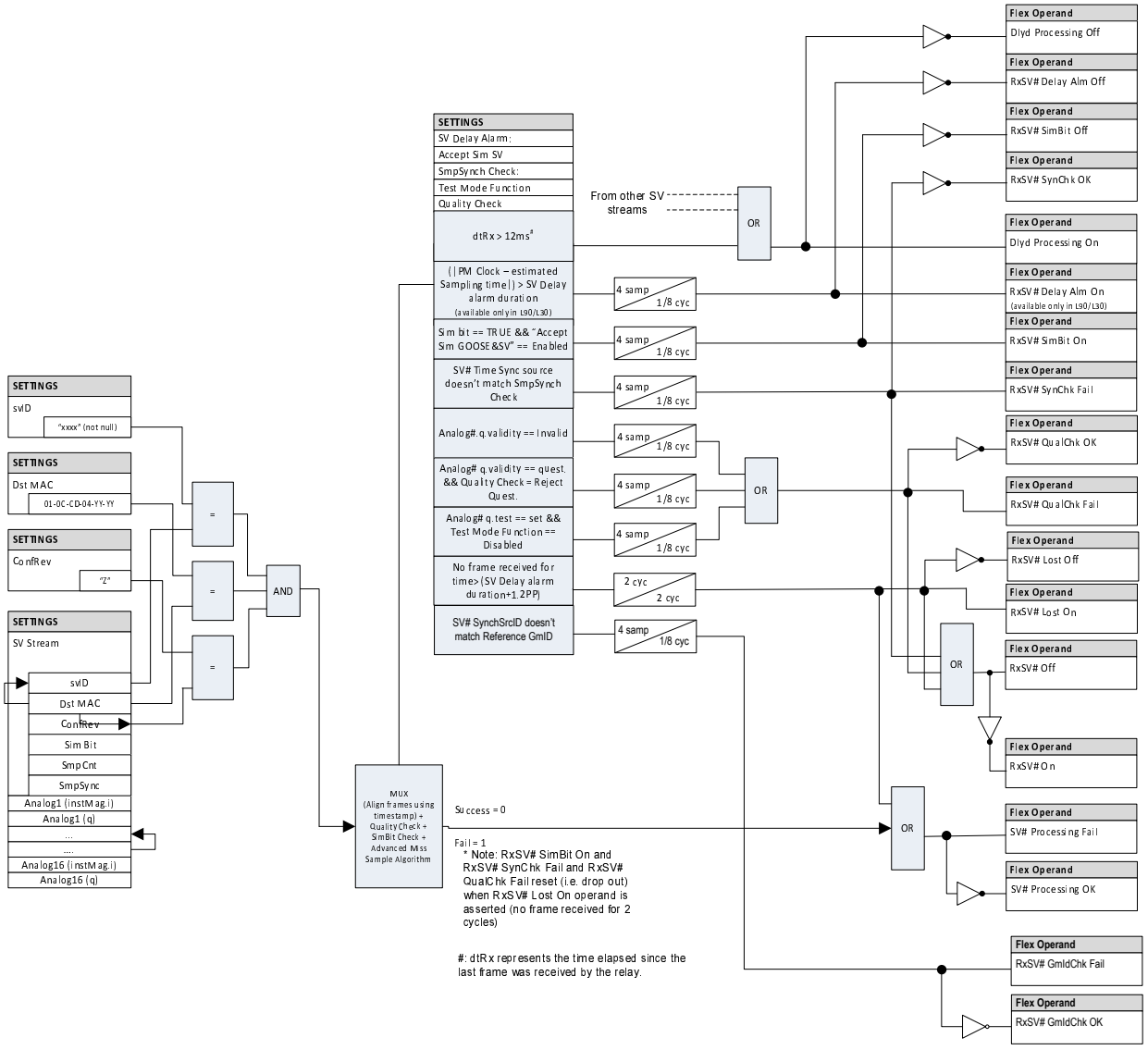

Figure 198: SV stream logic diagram

SV streams are accepted based on the following settings that need to match the MU:

- SmpSynch Check — Time synchronization check as outlined earlier in the General section
- Quality Check — Outlined earlier
- svID — Multicast Sampled Value Identification of a stream
- Dst MAC — Destination Media Access Control address in the header of the SV message
- ConfRev — When the configuration revision is non-zero, the UR accepts the frame when it matches its configured value

The relay decodes an SV stream when the DstMAC attribute of the injected SV stream matches any of the configured SV stream subscriptions.

Each qualified SV stream (that is, with matching svID, Dst MAC, and ConfRev) that is mapped to any of the AC Banks is checked for the SV delay, matching Sim bit, time synchronization source, and quality checks. When four samples in 1/8th of power cycle duration fail any of these checks, a corresponding FlexLogic operand is asserted, with a drop-out timer of one protection pass. The drop-out timer is retriggered each time that the check fails.

The RxSV# Lost FlexLogic operand is set when consecutive 160 samples (two cycles) are lost following the assertion of ***SV DELAY ALARM***. The time accuracy for the assertion of this operand can be up to two protection passes.

The RxSV# Off FlexLogic operand is set when the "Miss Sample Algorithm" fails (for example, due to temporary loss of stream or stream rejected due to any condition check failure) or the stream is lost, with a drop-out time of 17 protection passes. Every "Miss Sample Algorithm" fail condition for that RxSV# stream retriggers the drop-out timer for the RxSV# Off operand.

7.6.2 MESSAGE TROUBLESHOOTING

Examples for messages displayed are as follows:

- The SvID attribute of RxSV1 is empty — Type a name for the stream in the svID field
- The number of channels being selected for CT2-N...exceed the total allowable 7 CT channels — Set the CT2-N field to None, or increase the CT Channels field to 8
- The number of channels being selected for CT inputs...exceeds the total allowable 4 CT channels — The CT Channels field is set at 4 and there are entries in the CT2-A/B/C/N fields. Set the latter fields to None or increase the number of channels.
- The selected ’RxSV3’ stream is disabled. Configure stream before assigning to AC Bank Phase Origin — Enable the RxSV3 stream in its SV Stream field
- The AC Bank 2 assigned to Source 1 is not configured — B2 is set in a Source1 field at the bottom of the window. In the AC BANKS area of the window, go to the B2 column, and set one of the fields.
- The AC Bank 2 is a Voltage channel and is assigned to Phase CT of Source 1 — In the Source area of the window, change the B2 assignment from Phase CT to VT
- The AC Bank x assigned...is not configured.., — Configure the AC Banks section in the software window before setting the field
- The CT channels set of the selected ’RxSV1-CT1’ are not configured — In the Advanced Config section, set the CT fields

7.6.3 SV QUALITY PROCESSING

- Any degradation in the measurement or sampled value data of the merging unit inhibits the protection functions of the IED. IEC 61850 assigns quality attributes to each sampled value channel, to identify the data validity. The UR Process Bus Module interface uses the quality flags of subscribed analog channels to enable or inhibit the protection functions
- Quality is checked per channel in an ASDU/frame. For example, if A-phase current has invalid quality, but other current channels have good quality, the frames with good quality are still accepted and values are displayed in the metering. However, if any channel in the AC Bank has invalid quality, protection functions using this AC bank are blocked until all four channels have good quality.
- For protection functions to work correctly, q.validity needs to be good. Samples with invalid quality can result in unacceptable behavior from the protection functions. An SV analog quantity with q.validity = invalid is ignored.
- When “Quality Check” is set to 'Accept questionable' data, the data with q.validity = questionable is valid. When “Quality Check” is set to 'Reject questionable' data, the data with q.validity = questionable is ignored.
- When the relay is in-service, or test function is Disabled, the data with q.test set to TRUE is processed as invalid
- When the relay test function is forced or isolated, the data with q.test set to TRUE and q.test set to FALSE is valid.
- If any channel value within a sampled value stream is rejected due to a quality check, the device sets a FlexLogic operand “RxSV# QualChk Fail” for the duration of the quality check failure.

SV Quality Processing table

Publisher	Quality Check Setting	MMXU.DO.mag	MMXU.DO.q
Offline		0	Invalid
q=Invalid		0	Invalid
q=Questionable	Reject Questionable	0	Invalid
q=Questionable	Accept Questionable	Mag	Good
q=good,test		0	Invalid

Combination of input qualities	Desired output quality	Desired output status
IF all {good}	good	as calculated
ELSE IF all {invalid}	invalid	0
ELSE IF one {good} and mag{i}	good	as calculated

If the AC Src# is not configured with required inputs to calculate a metering value, the validity of the metering value needs to be marked as Invalid. For example, if Ground CT is not configured for a given AC Src#, all metering values derived from the Ground CT input are not calculated and must be assigned Invalid validity.

In case of IED Major Error or Relay Settings is 'Not Programmed' Metering Values are Invalid.

7.6.4 SV SIMULATION PROCESSING

When received SV frames have Sim Bit TRUE, the frame is ignored unless the value of @Master/LPHD1.Sim.stVal is true (@Master/LPHD1.Sim.stVal is true when ***Settings > Simulation > Subscribe to Simulated Values > Simulation Mode*** is enabled).

When @Master/LPHD1.Sim.stVal is TRUE...

- Once subscribed SV messages with simulation bit TRUE are accepted, subscribed SV messages with simulation bit FALSE are ignored and the received SV messages with the simulation bit TRUE are used in place of the actual SV messages until @Master/LPHD1.Sim.stVal is set to FALSE
- When a SV frame is received with simulation bit TRUE, the FlexLogic operand for the corresponding stream is set as RxSV# SimBit On. After the latest change in simulation bit as recorded by the "Latest Sim Bit Change" time stamp, the relay takes 4 to 8 msec to process and assert the RxSV# SimBit On FlexLogic operand.
- If SV messages with simulation bit TRUE are not received, the RxSv# continues to use the actual SV frames
- When the value of @Master/LPHD1.Sim.stVal changes from TRUE to FALSE
  - Subscribed SV messages with simulation bit TRUE are ignored immediately after this change
  - Only subscribed SV messages with simulation bit FALSE are accepted

7.6.5 SV STREAM SETTINGS

The following settings are available.

RxSV Format

Range: IEC 61850-9-2LE r2-1, IEC 61869-9 ed1.0

Default: IEC 61850-9-2LE r2-1

This setting selects the SV frame format, or protocol.

When set to `IEC 61850-9-2LE r2-1`, the relay assumes that the received SV frame references datasets that comply with IEC 61850-9-2LE, Table 6: Dataset (PhsMeas1). The IED must be configured with a system frequency of 50 or 60 Hz for correct operation.

When set to `IEC 61869-9 ed1.0`, the relay assumes that the dataset rules comply with IEC 61869-9 ed1.0 and that the number of Application-layer Service Data Units (ASDUs) are user-configurable.

Note:
When a file using a single SV stream (either IEC 61850-9-2LE r2-1 or IEC 61869-9 ed1.0) is converted from firmware version 8.2x and below to firmware versions 8.3x and above, the conversion will complete with no errors and the RxSV Format setting will have the same value as the original file. If there is a mix of SV streams in the original file, then the user will be notified of this error and all configured SV streams will be set to the SV Stream default; "Disabled". The RxSV Format setting will also default to "IEC 61850-9-2LE r2-1"

SV Stream

- *Range: Disabled, Enabled*
- *Default: Disabled*

This setting enables an SV stream. When disabled, all other ***RxSV*** settings are not editable and set to default.

svID

- *Range: 1 up to 129 Visible String characters*
- *Default: empty string*

svID refers to the name of the sampled value packet. The svID field of incoming SV messages must exactly match this value for the message to be accepted as a valid RxSV# message. The svID field of the sampled value frame must be unique within the system/substation.

Dst MAC

- *Range: any valid multicast MAC (12-digit hexadecimal number)*
- *Default: 01-0C-CD-04-00-00*

Only received SV messages having a destination Media Access Control (MAC) address equal to this value are accepted as valid RxSV# messages. Each address must be unique. The destination MAC increases the overall performance of multicast message reception by filtering only the configured messages for processing. For a received SV message, the Dst MAC is validated if it matches with any of the configured RxSV# Dst MAC. If validation is successful, the message is forwarded for further checks. There is no explicit check for the configured Dst MAC versus the SvID for a received SV message.

ConfRev

- *Range: 0 to 2147483647 in steps of 1*
- *Default: 0*

ConfRev refers to configuration revision, which is a count of configuration changes in the SV control block. If the value entered here is non-zero, the ConfRev field of incoming SV messages must match this value for the message to be accepted as a valid RxSV# message. If the setting is zero, RxSV# does not check the value received in the ConfRev field.

Force MU Out of Service

- *Range: FlexLogic operand*
- *Default: Off*

This setting is intended specifically for forcing a faulty Merging Unit (MU) out of service in applications where a circuit can be energized from more than one side, such as breaker and a half application, and the redundancy at MU level is not available. For such application current from both sides are summed up using UR source mechanism and if one MU fails, it will block all protection functions from using this source.

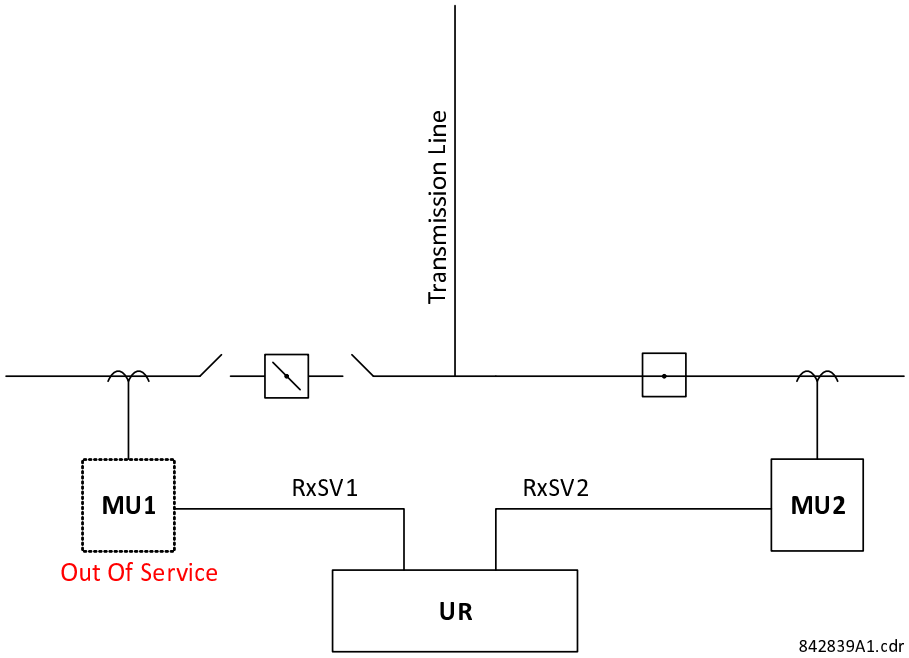

Figure 199: Forcing MU1 out of service for a Breaker-and-a-half configuration

For example, in the above figure it is possible to open Breaker1 and still keep the system energized through Breaker 2. The setting ***FORCE MU OUT OF SERVICE*** allows MU1to be taken out of service while keeping the protection and control elements operational by using the RxSV stream from MU2 only. If redundancy is available at MU level, then the protection can be kept operational without using setting FORCE MU OUT OF SERVICE, through the Cross-checking functionality. Please refer to the description of settings CROSS-CHECKING, PHASE ORIGIN 1, 2 and NEUTRAL ORIGIN 1, 2 for more details.

To put an MU out of service, the corresponding breaker has to be opened before asserting the FlexLogic selected in the setting ***FORCE MU OUT OF SERVICE*** to the `ON` state. The MU can now be disconnected for troubleshooting purposes. The current channels from the affected MU will be treated as online with sampled current values forced to ZEROs. The protection using respective source remains operational based on the current values sent by the other MU which is located on the closed breaker side.

Note that:

- Keeping RxSV online (with current substituted as ZEROs) is applicable to current channels only. The status of voltage channels will become Offline, and the protection elements will get blocked according to the setting ***SV TRBL PRT BLOCK***.
- The FlexLogic operands on the SV Config logic show the actual state of the affected the RxSV stream (i.e., RxSV# Off/On), irrespective of setting ***FORCE MU OUT OF SERVICE*** being Off or On.

You must ensure that the primary circuit to which the affected MU is connected remains de-energized for the entire duration of forcing MU out of service, otherwise the protection elements will mal-operate. The circuit should be de-energized before changing the setting ***FORCE MU OUT OF SERVICE*** to `On`. The circuit should be energized only after the setting FORCE MU OUT OF SERVICE is set to `Off`.

SV stream processing FlexLogic operands must not be used to automate FORCE MU OUT OF SERVICE. We strongly recommend that ***FORCE MU OUT OF SERVICE*** is manually controlled (for example, through a pushbutton, contact input, virtual input, or GOOSE).

The setting ***FORCE MU OUT OF SERVICE*** is intended for applications where a breaker can be opened, and the corresponding MU can be taken out of service while the circuit is energized through another breaker such as in breaker-and-a-half application. For any other application, the use of this setting should be carefully evaluated.

We do not recommend using the setting ***FORCE MU OUT OF SERVICE*** together with the cross-checking function.

Stream Status

This is an LED status indicator for the reception of an SV stream (RxSV#). A green LED reflects the RxSV# On FlexLogic operand, meaning that the SV stream is online. A red LED reflects the RxSV# Off FlexLogic operand, meaning that the SV stream is offline. When the EnerVista UR Setup software is not online or the stream is disabled, the LED is grayed-out with Not Available, or “-NA-” status.

Advanced Configuration

Click the button to display or hide the fields.

These are settings to import an MU CID file and/or support IEC 61869-9 based SV streams, as per Table 902 on Standard sample rates. IEC 61869-9 allows flexibility on numbers of current and voltage channels. It can be in one of these sequences: A, B, C, N or A, AB, B, BC, C, CA, N. The UR supports up to eight CT channels and up to eight VT channels and one or two ASDUs for protection applications. The following settings are active when the SV Stream field is set to IEC 61869-9, and they also depend on the MU Variant Code.

MU SCL Import

Use this feature to configure SV streams by importing an MU CID file. The setting file comparison with IEC 61869-9-2LE configuration is not available. The IEC 61850 Merge feature with IEC 61869-9-2LE is not available. Upon clicking the Import button and selecting a .cid file, a window appears from which to select the stream to import.

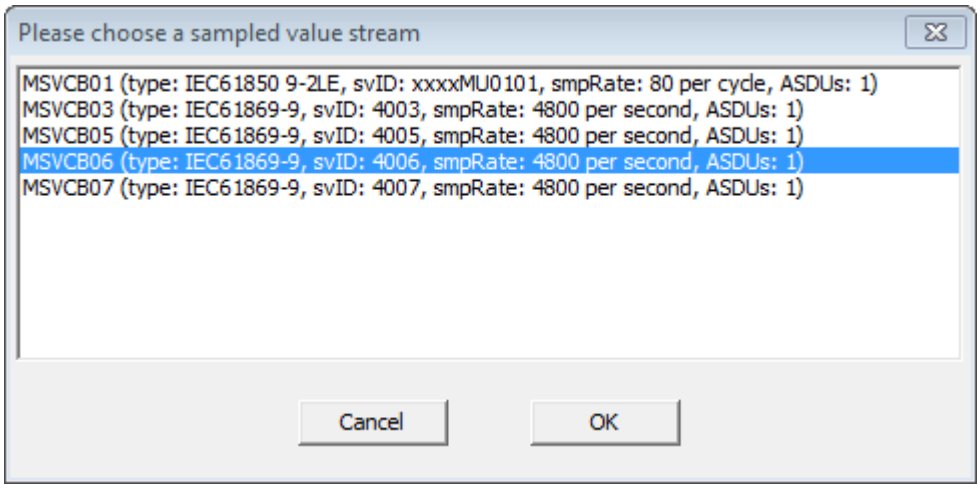

Figure 200: Selecting a stream to import from a merging unit CID file

Rules for accepting a CID file include:

- The same remote channel cannot be mapped to more than one AC bank channel
- An AC bank channel cannot be mapped to more than one remote channel
- For each AC bank, there are three phase inputs from the same SV control block and all three inputs are configured
- Phase 1 and Phase 2 inputs are not from the same SV control block
- Phase 1 and Phase 2 aux inputs are not from the same SV control block
- A configured Phase consumes three analog channels and Aux consumes one analog channel, with a maximum of 24 channels

SvCBRef

- *Range: 0 up to 129 alphanumeric, underscore, slash, and period characters, beginning with an alpha character*
- *Default: empty string*

This field is read-only. When imported, the MU SCL file populates this field. The value is an ObjectReference to the publishing control block in the format:

- <LDName>/LLN0.<SvCBName>

where <LDName> is the function-related name, if any, of the logical device containing the publishing control block, otherwise the product-related name of that logical device, and <SvCBName> is the name of the publishing control block.

When RxSV# is configured manually, the field is empty.

CT Channels

- *Range: 0 to 8*
- *Default: 4*

This setting specifies the number of CT channels available in the subscribed RxSV# message from the publisher MU. The CT-1 fields reflect the number selected here. The number of current quantities matches the number specified by the Variant Code of the MU.

Typically, a CT channel includes four current channels (three phase-ground currents and one ground/neutral/earth current). A current channel is the combination of the current sample value attribute (AmpSv.instMag.i) and the subsequent quality attribute (AmpSv.q).

If CT Channels is 4, CT1-A/B/C/N are supported for the stream.

If CT Channels is 8, CT2-A/B/C/N also are supported for the stream.

If CT Channels is 0, no CT channels display for AC input selection.

This setting is read-only and fixed at 4 when an ***SV Stream*** is set to IEC 61850-9-2LE.

If a message displays that `the number of channels being selected for CT inputs...exceeds the total allowable 4 CT channels`, this means that the CT Channels field is set at 4 and there are entries in the CT2-A/B/C/N fields. Set the latter fields to None or increase the number of channels.

VT Channels

- *Range: 0 to 8*
- *Default: 4*

This setting specifies the number of VT channels in the subscribed RxSV# message from the publisher MU. Typically, VT channels include four voltage channels (three phase-ground voltages and auxiliary voltage). This setting specifies the number of voltage channels in the subscribed RxSV# message. The voltage channel is the combination of voltage sample value attribute (VolSv.instMag.i) and the corresponding quality attribute (VolSv.q). The VT-1 fields reflect the number selected here. The number of voltage quantities matches the number specified by the Variant Code of the dataset.

If VT Channels is 4, VT1-A/B/C/N are supported for the stream.

If VT Channels is 8, VT2-A/B/C/ also are supported for the stream.

If VT Channels is 0, no VT channels display for AC input selection.

This setting is read-only and fixed at 4 when an ***SV Stream*** is set to IEC 61850-9-2LE.

If a message displays that "`the number of channels being selected for CT inputs...exceeds the total allowable 2 VT`, this means that the VT Channels field is set at 2 and there are more than two entries in the VT1-A/B/C/N fields. The number of configured VT1 fields needs to match the VT Channels field.

ASDUs

- *Range: 1, 2*
- *Default: 1*

This setting specifies the number of Application-layer Service Data Units (ASDUs) concatenated in one Application Protocol Data Unit (APDU) in the subscribed RxSV# message. When concatenating several ASDUs into one frame, the ASDU with the oldest samples is the first one in the frame. This setting is read-only and set at the default when an SV Stream is set to IEC 61850-9-2LE.

Recycle power to the relay when changing this setting.

Variant Code

The EnerVista software auto-populates the Variant Code for the RxSV# message based on the settings Sample Rate, the number of ASDUs, the number of CT Channels, and the number of VT Channels configured.

For example, F4800S2I8U0 describes sampled values with 4800 samples per second, two ASDU (samples) per message, 8 currents, and no voltages.

As another example, F4800S1I8U4 means sampled values with 4800 samples per second, 1 ASDU per message, 8 CT channels, and 4 VT channels.

This field is read-only as per IEC 61869-9: 2016, Clause-6.903.2.

The number of samples (sample rate) in the variant code is set based on the ***SETTINGS > SYSTEM SETUP > POWER SYSTEM > NOMINAL FREQUENCY*** setting. This value displays `4000 Hz` for 50 Hz nominal frequency. This value displays `4800 Hz` for 60 Hz nominal frequency or any other nominal frequency except 50 Hz. IEC 61869-9 suggests the 4800 Hz sample rate for general measuring and protective applications, regardless of the power system frequency.

CT1-A/B/C

- *Range: None, AC1 to AC16*
- *Default: AC1/AC2/AC3*

This setting specifies the sequence of Analog Channel (per phase) that is mapped to the CT-1 of the corresponding stream. An origin to CT Phase input defines the physical measurement input to the CT bank by mapping specific AC inputs from that merging unit (or SV message).

The fields are active when the ***SV Stream*** field is set to IEC 61869-9. The CT1 phases are available if the number of ***CT Channels*** is 4 or below. CT2 is added if ***CT Channels*** is 5 or higher.

The fields are set to the defaults and are read-only when the ***SV Stream*** field is set to IEC 61850-9-2LE.

CT1- N

- *Range: None, AC1 to AC16*
- *Default: AC4*

This setting specifies the Analog Channel that is mapped to the CT ground/neutral input. An origin to CT1-N input defines the physical measurement input to the CT bank by mapping specific AC inputs from that MU (or SV message). If the MU does not publish any CT1-N inputs, configure the setting as None.

In the EnerVista software, the CT Aux input setting only populates the current channels of that RxSV#.

This CT Aux input setting is active when the ***SV Stream*** field is set to IEC 61869-9.

This CT Aux input setting is set to AC4 and is read-only when the ***SV Stream*** is set to IEC 61850-9-2LE.

VT1-A/B/C

- *Range: None, AC1 to AC16*
- *Default: AC5/AC6/AC7*

This setting specifies the Analog Channel (per phase) that is mapped to the VT1- phase inputs. An origin to VT Phase input defines the physical measurement input to the VT bank by mapping specific AC inputs from that MU (or SV message). If the MU does not publish any VT channels, configure the setting as None.

The VT1 phase fields are active when the ***SV Stream*** field is set to IEC 61869-9. The VT1 phases are available if the number of ***VT Channels*** is 4 or below. VT2 is added if ***VT Channels*** is 5 or higher.

The fields are set to the defaults and are read-only when the ***SV Stream*** field is set to IEC 61850-9-2LE.

VT1-N

- *Range: None, AC1 to AC16*
- *Default: AC8*

This setting specifies the Analog Channel that is mapped to the VT Aux/neutral input. An origin to VT input defines the physical measurement input to the VT bank by mapping specific AC inputs from that MU (or SV message). If the MU does not publish any VT1-N inputs, configure the setting as None.

In the EnerVista software, the VT Aux input setting only populates the voltage channels of that RxSV#.

The VT1-N input setting is active when the ***SV Stream*** field is set to IEC 61869-9.

The VT1-N input setting is set to the default and is read-only when the SV Stream field is set to IEC 61850-9-2LE.

AC BANKS

The UR platform supports up to six AC Banks. They can be CT or VT banks (similar to ***SETTINGS > SYSTEM SETUP > AC INPUTS > CURRENT/VOLTAGE BANK***). That is, each AC Bank can be configured either as current or voltage (not both). If configured as current, inapplicable voltage settings (such as VT ratio, VT secondary) are inactive. Similarly, if a bank is configured as voltage, current settings (such as CT primary, CT secondary) are inactive. In addition, bank level redundancy (that is, Origin-1 and Origin-2) is supported using crosschecking of each channel signal received from two different SV streams that are connected to the same electrical point on the primary power system. A maximum 24 channels can be configured to the AC Banks.

Click the button to display or hide the fields.

The following settings are available for each AC bank.

Each Phase Origin setting consumes three phase channels Ia/Va, Ib/Vb, or Ic/Vc, and a Neutral Origin setting consumes one ground or Aux Channel In/Vn, which means that

- An AC Bank with Phase Origin1 and Neutral Origin1 settings configured consumes four channels
- An AC Bank with both Phase Origin 1 and Phase Origin 2 and both Neutral Origin 1 and Neutral Origin 2 settings configured consumes eight channels

A maximum of 24 channels can be configured to the AC Banks.

For changes in this section, restart the relay, for example using ***Maintenance > Reboot Relay Command***.

Phase Origin 1, 2

- *Range: None, RxSV1-CT1/PHS, RxSV1-VT1/PHS to RxSV8-CT1/PHS, RxSV8-VT1/PHS*
- *Default: None*

An origin to an AC bank defines the physical measurement input to the bank by mapping specific AC inputs from a specific MU to the bank.

The UR Process Bus Module provides for the reliability of AC values for protection, metering, and oscillography by allowing duplicate origins of AC data. An origin is considered unavailable when set to None. If origin 1 is available, the relay uses the values from origin 1 for protection, metering, and oscillography. Otherwise if origin 2 is available, the relay uses the values from origin 2. If both origins are unavailable, then the bank AC values are forced to zero to prevent ambiguity of measurement.

With crosschecking, the relay can use different origins. See the ***Crosschecking*** setting for information regarding automatic protection blocking possibilities on loss of one or both origins.

The two-phase origins in an AC bank must be of the same type and connected to the same electrical point in the primary power system. The two origins must be two currents with the same CT settings, or two voltages with the same VT settings. The current/voltage type of the phase and auxiliary origins must also match on each AC bank. It

is intended that the origin AC inputs measure the same primary quantity with the same ratio. The same ratio and connection settings are applied to both origins.

Neutral Origin 1, 2

- *Range: None, RxSV1-CT1/NTR, RxSV1-VT1/ NTR to RxSV8-CT1/NTR, RxSV8-VT1/ NTR*
- *Default: None*

These settings specify the field units that are the origins of the auxiliary input IN or VN. Duplicate auxiliary origins are supported in the same way as phase origins.

The two auxiliary origins in an AC bank must be of the same type. The two origins must be two currents with the same CT secondary setting, or two voltages. The current/voltage type of the phase and auxiliary origins also must match on each AC bank. It is intended that the origin AC inputs measure the same primary quantity with the same ratio. The same ratio and connection settings are applied to both origins.

Crosschecking

- *Range: None, Depend Origin-1 Pref, Depend Origin-2 Pref*
- *Default: None*

The crosschecking feature allows application-level redundancy by checking between two independent SV streams from the same electrical connection of the instrument transformers. In addition to the network redundancy provided by PRP/HSR, the UR Process Bus Module allows the relay to communicate with redundant merging units.

When set to None, crosschecking is disabled. Use this on a non-protection-critical AC bank, such as one used for a synchrocheck voltage. GE strongly recommends setting it to None when redundancy is not supported at the merging unit level; otherwise the "ACBank# Orig1(2) In Use" operand status is inaccurate.

Origin preference is supported in case of discrepancy in dependability mode. This allows testing (secondary injection) or replacement of an MU that is configured to non-preferred origin without affecting protection functions since these functions are using a preferred origin stream when online. As such, dependability with Origin-1 preference allows continued use of Origin-1 in case of discrepancy between both online origin stream sampled values. Similarly, dependability with Origin-2 preference allows continued use of Origin-2 in case of discrepancy between both online origin stream sampled values.

The table shows how the Crosschecking setting, the availability of AC bank origins, and discrepancy checks determine whether protection is blocked. Blocked here means only protection elements. It does not inhibit metering, actual values, oscillography, or other functions.

When set to Depend Origin-1 Pref, protection is blocked if there is no good signal from both the Origin-1 and Origin-2 sources. When both the merging unit sources are good, the preference is given always for Origin-1. When the preferred MU sources fails, the alternate MU source is used for protection and measurement.

When set to Depend Origin-2 Pref, protection is blocked if there is no good signal from both the Origin-1 and Origin-2 sources. When both the merging unit sources are good, the preference is given always for Origin-2. When the preferred MU sources fails, the alternate MU source is used for protection and measurement.

> *Note:*
> *While switching from a preferred to non-preferred channel, the protection functions are delayed for two cycles. While switching back to a preferred channel, the protection functions are delayed for one cycle.*

Crosschecking and protection behavior

Crosschecking setting	Origin-1 RxSV stream status	Origin-2 RxSV stream status	Discrepancy check	Protection operation
None	Not relevant	Not relevant	No check	Normal

Depend Origin-1 Pref	Not mapped	Not mapped	No check	Normal
	Online	Online	OK / discrepant	Normal using Origin-1 stream
	Online	Offline	No check	Normal using Origin-1 stream
	Offline	Online	No check	Normal using Origin-2 stream
	Offline	Offline	No check	Blocked
Depend Origin-2 Pref	Not mapped	Not mapped	No check	Normal
	Online	Online	OK / discrepant	Normal using Origin-2 stream
	Online	Offline	No check	Normal using Origin-1 stream
	Offline	Online	No check	Normal using Origin-2 stream
	Offline	Offline	No check	Blocked

Origin1 becomes offline and switches to Origin2 for the following reasons:

- When more than three of five frame samples received are invalid or a frame with sequence number is received after three consecutive missed frames for any channel of origin. The reason for invalid frames can be any of the following reasons:
  - If one or more AmpSv.q or VolSv.q attribute(s) are invalid from the assigned SV frame channels to the AC bank origin
  - When “Quality Check” is set to 'Reject questionable' data, the data with q.validity = questionable is processed as invalid
  - When the relay is in-service or the test function is Disabled, the SV data with q.test set to TRUE is processed invalid
  - When received SV frames with Sim Bit TRUE, the frame is invalid unless the value of @Master/LPHD1.Sim.stVal is true (that is Settings > Simulation > GOOSE/SV > Accept Sim GOOSE&SV or Settings > Simulation > Subscribe to Simulated Values > Simulation Mode is set to Enabled)
  - If the value of @Master/LPHD1.Sim.stVal is TRUE, once a subscribed SV messages with simulation bit TRUE are received, subscribed SV messages with simulation bit FALSE are invalid until @Master/LPHD1.Sim.stVal is set to FALSE
  - SV streams with “SmpSync” value out of the following specified ranges are rejected:
  - i. When the “SmpSynch Check” is set to “Global” (2), SV streams with “SmpSynch” value set to Global (2) are accepted
  - ii. When the “SmpSynch Check” is set to “Local” (1), SV streams with “SmpSynch” value set to Global (2) or Local (1) are accepted
  - iii. When the “SmpSynch Check” is set to “Any” (0 to 254), SV streams with “SmpSynch” value set in the range of 0 to 254 are accepted. For 7.80 version, the accepted range is 0 to 127.
- SV frames are delayed/not received for more than 1.9 power system cycles

The selected Origin quality will be the quality of the AC Bank.

If both Origins have invalid quality, then the AC Bank data is marked as invalid and does not participate in protection.

Phase/Ground CT Primary

- *Range: 1 to 65000 A insteps of 1*
- *Default: 1*

Enter the rated CT primary current value in Amperes. For 1000:5 and 1000:1 CTs, enter 1000.

Phase/Ground CT Secondary

- *Range: 1A, 5A*
- *Default: 1A*

Enter the rated CT secondary current value in Amperes. For correct operation, the CT secondary rating must match the setting (that must also correspond to the specific CT connections used).

Phase CT Polarity

- *Range: Standard, Inverted-3ph, Inverted Ph-A, Inverted Ph-B, Inverted Ph-C*
- *Default: Standard*

If CTs are wired with the correct polarity in all phases, i.e. CT polarity reversal is not required, “Standard” should be selected. If CT polarity is incorrect in just one phase, then select “Inverted Ph-A (B or C)”; choosing the affected phase. If CT polarities of all three phases are incorrect, select “Inverted-3Ph” to correct the CT polarities for all three phases. It should be noted that the oscillography record will capture the CTs current signal as applied to the relay terminal irrespective of this setting. This ensures correct relay behavior when recorded oscillography is played back to the relay.

Ground CT Polarity

Range: Standard, Inverted

Default: Standard

If the ground CT is wired with the correct polarity, select “Standard” for this setting. If the Ground CT polarity is incorrect, then select “Inverted” to correct it. It should be noted that the oscillography record will capture ground CT current signal as applied to the relay terminal irrespective of this setting. This ensures the correct relay behavior when recorded oscillography is played back to the relay.

It is important that the settings ***PHASE CT POLARITY*** and ***GROUND CT POLARITY*** are set to the correct values before putting the relay into operation. Selecting the wrong value or changing this setting whilst relay is in operation would result in undesirable operation of the protection and control functions.

If you intend to use the crosschecking functionality (redundancy at MU level), then this setting should be used carefully to ensure that CT Polarity is the same on both MUs on each phase/neutral channel.

SIGNAL SOURCES

Click the button to display or hide the fields. The first six Sources are the platform sources and can accept both current banks and voltage banks and are associated with AC bank 1 to 6. The first six sources allow current summation for phase and auxiliary CTs.

Recycle power to the relay when changing a source.

Name

- *Range: up to 20 alphanumeric characters*
- *Default: SRC 1*

This setting specifies an alphanumeric name for the source.

Phase CT

- *Range: None, B1, B2, B3, B4, B5, B6, B1+B2, ... B1+B2+B3+B4+B5+B6 or B7...B28*
- *Default: None*

This setting selects the phase CTs of an AC bank or the sum of the phase CTs of multiple AC banks to be the phase current of the source. That is, it select the AC Banks section above in the window.

If you see the message "the AC Bank x assigned...is not configured.." it means that you need to configure the AC Banks section in the software window before setting this field. The AC Bank selected can match the Origins fields and Sources, such as a Phase CT set at B1 with Phase Origin 1 RxSV1-CT1/PHS and source SRC1. Another example is to use Phase CT set at B2 with Phase Origin 1 RxSV2-CT1/PHS and source SRC2.

Ground CT

- *Range: None, B1, B2, B3, B4, B5, B6, B1+B2, ... B1+B2+B3+B4+B5+B6 or B7...B28*
- *Default: None*

This setting selects the ground CTs of an AC bank or the sum of the ground CTs of multiple AC banks to be the ground current of the source. That is, it selects the AC Banks section above in the window.

Phase VT

- *Range: None, B1, B2, B3, B4, B5, B6*
- *Default: None*

This setting selects the phase VTs of an AC bank to be the phase voltages of the source.

Alt Phase CT

- *Range: None, B1, B2, B3, B4, B5, B6, B1+B2, ... B1+B2+B3+B4+B5+B6 or B7...B28*
- *Default: None*

This setting is for switching between main and alternate sources. It selects the alternate phase CTs of an AC bank or the sum of the phase CTs of multiple AC banks to be the phase current of the source.

Alt Ground CT

- *Range: None, B1, B2, B3, B4, B5, B6, B1+B2, ... B1+B2+B3+B4+B5+B6 or B7...B28*
- *Default: None*

This setting is for switching between main and alternate sources. It selects the ground CTs of an AC bank or the sum of the ground CTs of multiple AC banks to be the ground current of the source.

Switch Alt CT

- *Range: FlexLogic operand*
- *Default: Off*

This setting is for switching the alternate source on or off.

Alt Phase VT

- *Range: None, B1, B2, B3, B4, B5, B6*
- *Default: None*

This setting is for switching between main and alternate sources. It selects the phase VTs of an AC bank to be the phase voltages of the source.

Alt Aux VT

- *Range: None, B1, B2, B3, B4, B5, B6*
- *Default: None*

This setting is for switching between main and alternate sources. It selects the auxiliary VT input of an AC bank to be the auxiliary voltage of the source.

Switch Alt VT

- *Range: FlexLogic operand*
- *Default: Off*

This setting is for switching the alternate source on or off.

7.7 REMOTE RESOURCES CONFIGURATION

When the relay is ordered with a process card module as a part of HardFiber system, an additional **Remote Resources** menu tree is available in the EnerVista software to allow configuration of the HardFiber system.

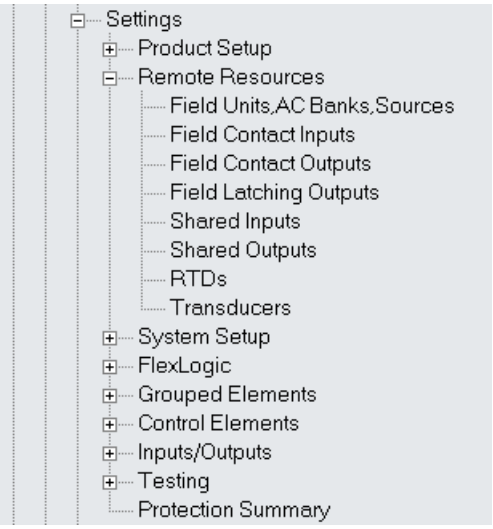

Figure 201: Remote Resources configuration menu

The remote resources settings configure a Product with a Process Bus Module to work with HardFiber Bricks. Remote resources configuration is only available through the EnerVista software, and is not available through the Product front panel. A Brick provides eight AC measurements, along with contact inputs, DC analog inputs, and contact outputs, to be the remote interface to field equipment such as circuit breakers and transformers. The Product with a Process Bus Module has access to all of the capabilities of up to eight Bricks. Remote resources settings configure the point-to-point connection between specific fiber optic ports on the Product process card and specific Brick. The relay is then configured to measure specific currents, voltages and contact inputs from those Bricks, and to control specific outputs.

The configuration process for remote resources is straightforward and consists of the following steps.

- Configure the field units. This establishes the point-to-point connection between a specific port on the relay Process Bus Module, and a specific digital core on a specific Brick. This is a necessary first step in configuring a process bus relay.
- Configure the AC banks. This sets the primary and secondary quantities and connections for currents and voltages. AC bank configuration also provides a provision for redundant measurements for currents and voltages, a powerful reliability improvement possible with process bus.
- Configure signal sources. This functionality of the Product has not changed other than the requirement to use currents and voltages established by AC bank configuration under the remote resources menu.
- Configure field contact inputs, field contact outputs, RTDs, and transducers as required for the application's functionality. These inputs and outputs are the physical interface to circuit breakers, transformers, and other equipment. They replace the traditional contact inputs and outputs located at the relay to virtually eliminate copper wiring.
- Configure shared inputs and outputs as required for the application's functionality. Shared inputs and outputs are distinct binary channels that provide high-speed protection quality signaling between relays through a Brick.

For additional information on how to configure a relay with a Process Bus Module, see the HardFiber Process Bus System Instruction Manual.

CHAPTER 8

PHASOR MEASUREMENT UNIT

8.1 CHAPTER OVERVIEW

This chapter contains the following sections:

Chapter Overview 352
Synchrophasor implementation 353
Implementation of IEC 61850-90-5 354
Example of creation of different data sets 355
Example of CFG-2 based configuration 356
Modification of SYNC word 357
Settings 358

8.2 SYNCHROPHASOR IMPLEMENTATION

Phasors are used in protection relays. When these phasors are referenced to a common time base, they are referred to as synchrophasors. A vastly improved method for tracking power system dynamic phenomena for power system monitoring, protection, operation, and control can be realized when synchrophasors from different locations within the power system are networked to a central location.

The relay offers PMU features over two communication standards, IEC 61850-90-5 and IEEE C37.118. The figure shows complete synchrophasor implementation.

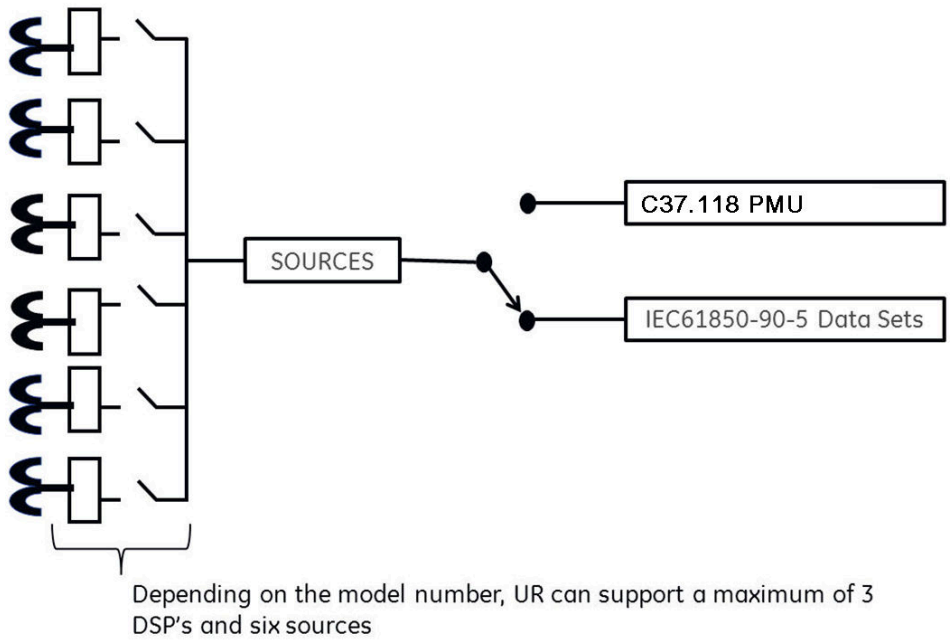

Figure 202: Synchrophasor implementation

8.3 IMPLEMENTATION OF IEC 61850-90-5

Synchrophasor data is measured and calculated by PMUs. The data is used to assess the condition of the electrical power network. The IEEE C37.118 standards define the message formats used to transmit synchrophasor data. Synchrophasor streaming via IEEE C37.118 works well, but there is now a need to have an IEC61850-compliant communication mechanism. This has led to the development of IEC 61850-90-5. The IEC 61850-90-5 technical report defines the packet structure for multicast routing of streamed Sampled Value (SV) known as R-SV.

UR firmware versions 7.0 and above provides this facility, which is equivalent in structure and configuration to that of the existing IEEE C37.118 implementation of firmware version 6.0. That means synchrophasor data at rates up to 60 Hz for metering, and 120 Hz for protection class synchrophasors.

Precise time input to the relay from the international time standard, via either IRIG-B or PTP, is vital for correct synchrophasor measurement and reporting. For IRIG-B, a DC level shift IRIG-B receiver must be used for the PMU to output proper synchrophasor values.

Depending on the applied filter, the synchrophasors that are produced by PMUs are classified as either P (protection) or M (Measurement) class synchrophasors. Synchrophasors available within the UR that have no filtering applied are classified as NONE, which within the standard is classified as PRES OR UNKNOWN under the Calculation Method - ClcMth.

A setting value — MSVID — is created with a maximum input range of 56 characters (=64 less 6 for the IDCode less 2 for the Class).

Synchrophasor Rectangular Format and Integer data types are NOT supported in IEC 61850-90-5 (only supported with IEEE C37.118) and not to set. For firmware versions 7.0 and later, the description fields for the phasors, analog, and digital channels are populated with the 16 character name field provided within the Basic Configuration menu.

8.4 EXAMPLE OF CREATION OF DIFFERENT DATA SETS

The aggregators allow the aggregation of phasors from multiple PMUs (with the same reporting rate) into a single custom data set to optimize bandwidth when streaming.

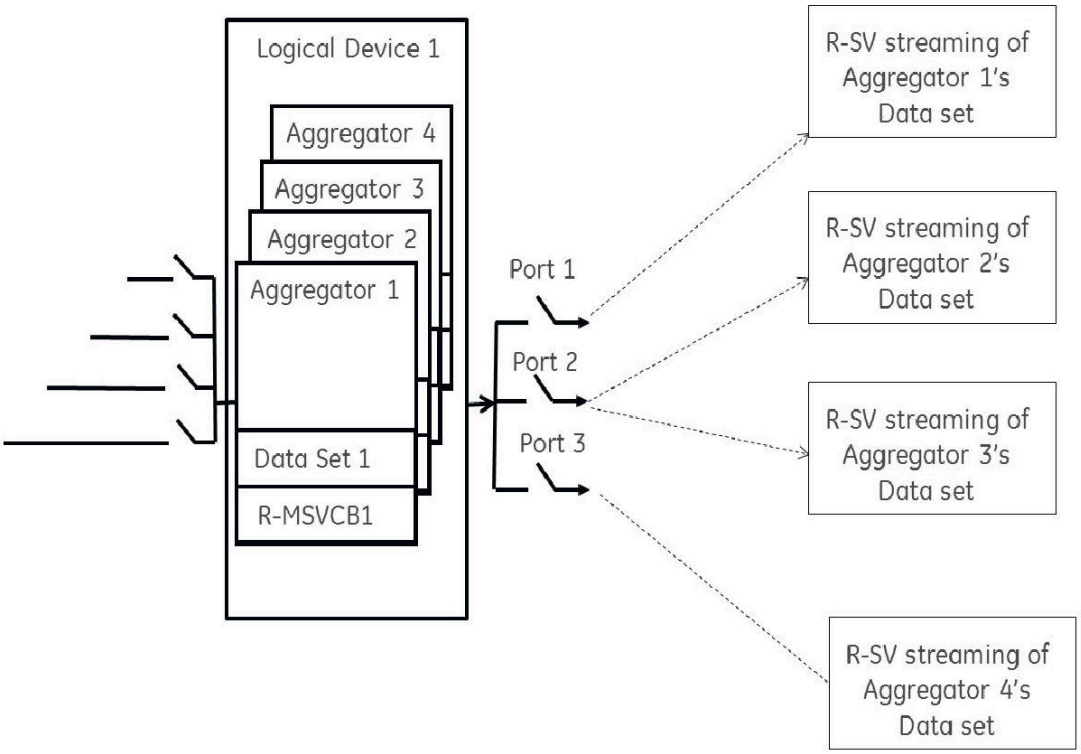

Figure 203: Example of aggregator data sets

8.5 EXAMPLE OF CFG-2 BASED CONFIGURATION

The relay is expected to send the CFG-2 file (IEEE C37.118 config. file) upon request from the upstream synchrophasor devices without stopping R-SV multicasting, as shown in the following figure. The primary domain controller (PDC) does not need to use a stop/start data stream command if the UR protocol is set to IEC 61850-90-5 prior to requesting the configuration via CFG-2 (IEEE C37.118 config. file). The CFG-2 request from the P30 can be on TCP/IP or UDP/IP, however, R-SV data streaming is only UDP multicasts (not TCP).

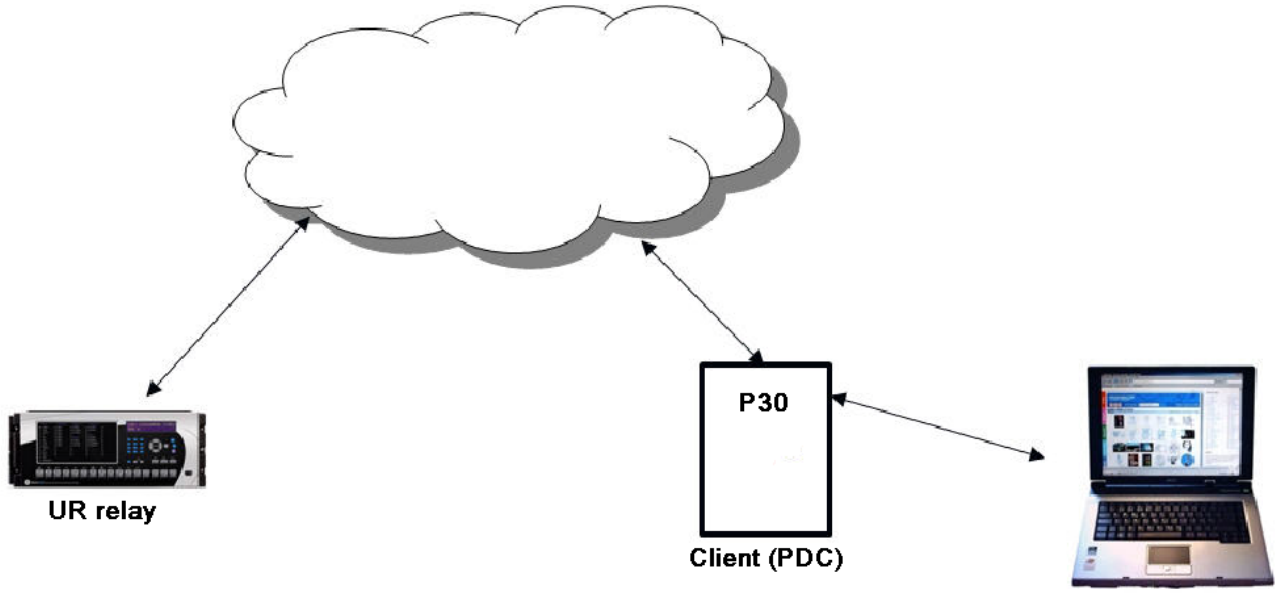

Figure 204: CFG-2 based configuration solution

8.6 MODIFICATION OF SYNC WORD

In the CFG-2 file, all relevant information about the data being streamed is included. However, this file does not include the fact that it describes a 90-5 dataset or the number of Application Service Data Units (datasets). In order to communicate this information via the CFG-2 file for a given aggregator, when the aggregator is set to 90-5, the version number of the CFG-2 file (found in bits 0-3 of the frame SYNC word, which is set presently to 2) is set as follows:

Value (decimal)	Number of ASDUs
11	1
12	2
13	3
14	4

8.7 SETTINGS

Setting path: ***SETTINGS > SYSTEM SETUP > PHASOR MEASUREMENT UNIT***

■ PHASOR MEASUREMENT ■ UNIT	⇔	■ PHASOR MEASUREMENT ■ UNIT 1
	⇕	■ PMU AGGREGATOR 1 ■
	⇕	■ 90–5 R-SV CB 1 ■ CONFIGURATION
	⇕	■ TIME QUALITY ■

The PMU settings menu consists of the following sub-menus. Up to six PMUs are available, depending on UR model and option choice. Only one is shown here

PHASOR MEASUREMENT UNIT 1

This submenu invokes the settings for a particular PMU instance.

PMU AGGREGATOR 1

This submenu invokes the Aggregator settings for a particular PMU instance

90–5 R-SV CB 1

This submenu invokes the settings for an IEC 61850 implementation.

8.7.1 PMU INSTANCE SETTINGS

Setting path: ***SETTINGS > SYSTEM SETUP > PHASOR MEASUREMENT UNIT > PHASOR MEASUREMENT UNIT <n>***

Up to six PMUs are available, depending on UR model and option choice. Only one is shown here.

■ PHASOR MEASUREMENT ■ UNIT 1	⇔	■ PMU 1 BASIC ■ CONFIGURATION
	⇕	■ PMU 1 ■ CALIBRATION
	⇕	■ PMU 1 ■ TRIGGERING
	⇧	■ PMU 1 ■ RECORDING

The PMU instance menu consists of the following sub-menus.

PMU 1 BASIC CONFIGURATION

This submenu invokes the basic configuration settings for PMU 1.

PMU 1 CALIBRATION

This submenu invokes the calibration settings for PMU 1.

PMU 1 TRIGGERING

This submenu invokes the triggering settings for PMU 1.

PMU 1 RECORDING

This submenu invokes the recording settings for PMU 1.

8.7.1.1 BASIC CONFIGURATION

Setting path: ***SETTINGS > SYSTEM SETUP > PHASOR MEASUREMENT UNIT > PHASOR MEASUREMENT UNIT <n>***

Up to six PMUs are available, depending on UR model and option choice. Only one is shown here.

■ PMU 1 BASIC ■ CONFIGURATION	⇔	PMU 1 FUNCTION: Disabled	Range: Enabled, Disabled
	⇕	PMU 1 IDCODE: 1	Range: 1 to 65534 in steps of 1
	⇕	PMU 1 STN: GE-UR-PMU	Range: 32-character ASCII string truncated to 16 characters if mapped into C37.118 Default: GE-UR-PMU
	⇕	PMU 1 GLOBAL PMU ID: GE-UR-PMU-000001	Range: 16-character ASCII string
	⇕	PMU 1 LATITUDE: 0.00000 °	Range: -90.00000 to 90.00000 in steps of 0.00001°.
	⇕	PMU 1 LONGITUDE: 0.00000 °	Range: -179.99999 to 180.00000 in steps of 0.00001°
	⇕	PMU 1 ELEVATION: 0.000 m	Range: -9999.999 to 9999.999 in steps of 0.001 meters
	⇕	PMU 1 SIGNAL SOURCE: SRC 1	Range: available signal sources
	⇕	PMU 1 CLASS: M-CLASS	Range: None, M-CLASS, P-CLASS
	⇕	PMU 1 FORMAT: Integer	Range: Integer, Floating-point
	⇕	PMU 1 STYLE: Polar	Range: Polar, Rectangular
	⇕	PMU 1 RATE: 10/sec	Range: 1, 2, 4, 5, 10, 12, 15,20, 25, 30,50, 60, 100, 120
	⇕	PMU 1 f & df/dt FILTER: None	Range: None, 10Hz/s <10Hz, 10Hz/s <20Hz, 20Hz/s <10Hz, 20Hz/s <20Hz
	⇕	■ C37.118 PMU 1 ■ CONFIGURATION	
	⇕	PMU 1 PHS- 1: Off	Range: available synchrophasor values
		⇕	
	⇕	PMU 1 PHS- 14: Off	Range: available synchrophasor values
	⇕	PMU 1 PHS- 1: NM: GE-UR-PMU-PHS 1	Range: 16-character ASCII string

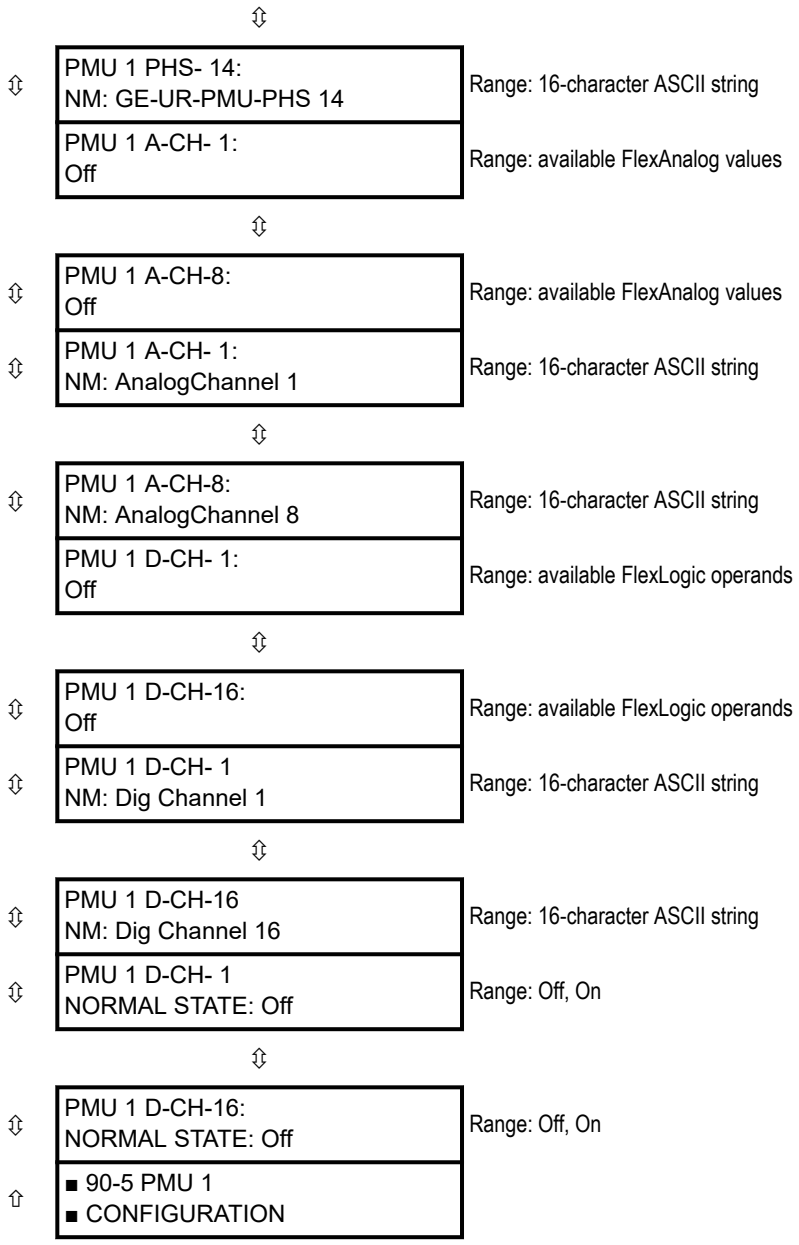

PMU 1 FUNCTION

This setting enables the LOGICAL Device PMU 1 functionality. Use this setting to permanently enable or disable the feature.

PMU 1 IDCODE

This setting assigns a numerical ID to the PMU. It corresponds to the IDCODE field of the data, configuration, header, and command frames of the IEEE C37.118 protocol. The PMU uses this value when sending data, configuration, and header frames; and it responds to this value when receiving the command frame. This is used when only data from one PMU is present.

PMU 1 STN

This setting assigns an alphanumeric ID to the PMU station. It corresponds to the STN field of the configuration frame of the IEEE C37.118 protocol. This value is a 16-character ASCII string as per the IEEE C37.118 standard.

PMU 1 GLOBAL PMU ID

This setting is used to assign a global ID to the PMU and corresponds to the G_PMU_ID field in configuration 3 (CFG-3) message per the C37.118 protocol. This ID allows uniquely identifying PMUs in a system that has more than 65535 PMUs.

PMU 1 LATITUDE:

This setting is used to assign PMU Latitude in degrees, where positive values are N of equator, and negative values are S of equator.

PMU 1 LONGITUDE:

This setting is used to assign PMU longitude in degrees, where positive values are E of the prime meridian, and negative values are W of the prime meridian.

PMU 1 ELEVATION:

This setting is used to assign PMU elevation in meters, where positive values are above sea level, and negative values are below sea level.

PMU 1 SIGNAL SOURCE

This setting specifies one of the available L90 signal sources for processing in the PMU. Any combination of voltages and currents can be configured as a source. The current channels can be configured as sums of physically connected currents. This facilitates PMU applications in breaker-and-a-half, ring-bus, and similar arrangements. The PMU feature calculates voltage phasors for actual voltage (A, B, C, and auxiliary) and current (A, B, C, and ground) channels of the source, as well as symmetrical components (0, 1, and 2) of both voltages and currents. When configuring communication and recording features of the PMU, the user can select, from the above superset, the content to be sent out or recorded. When one source is selected by one PMU, it cannot be selected by another PMU.

PMU 1 CLASS (Range P, M, None)

This setting selects the synchrophasor class. A reporting rate of 100 or 120 can only be selected for class P synchrophasors and if the system frequency is 50 or 60 Hz, respectively.

PMU 1 NETWORK REPORTING FORMAT

This setting selects between reporting synchrophasors as 16-bit integer or 32-bit IEEE floating point numbers. This setting complies with bit-1 of the FORMAT field of the C37.118 configuration frame. Note that this setting applies to synchrophasors only; the user-selectable FlexAnalog channels are always transmitted as 32-bit integer values.

PMU 1 NETWORK REPORTING STYLE

This setting selects between reporting synchrophasors in rectangular (real and imaginary) or in polar (magnitude and angle) coordinates. This setting complies with bit-0 of the FORMAT field of the C37.118 configuration frame.

PMU 1 RATE

This setting specifies the reporting rate for the network (Ethernet) port. This value applies to all PMU streams of the device that are assigned to transmit over this aggregator. For a system frequency of 60 Hz (50 Hz), the L90 generates a reporting mismatch message if the selected rate is not set as 10 Hz, 12 Hz, 15 Hz, 20 Hz, 30 Hz, 60 Hz, or 120 Hz (or 10 Hz, 25 Hz, 50 Hz, or 100 Hz when the system frequency is 50 Hz) when entered via the keypad or software; and the L90 stops the transmission of reports. Note that 4 Hz is not allowed for an M-class 50 Hz system.

PMU 1 f & df/dt FILTER

This setting allows applying post-filtering to the frequency and rate-of-change of-frequency to avoid reporting erroneous values, which can possibly happen during fault, switching, and other system disturbances. For example,

choosing 20Hz/s <10Hz setting ensures that if rate-of-change of-frequency between current reporting instance and previous one exceeds 20Hz/s or frequency deviation from the nominal frequency exceeds 10Hz, then new frequency and rate-of-change of-frequency value are invalidated. If this happens, the previous valid value of the frequency is maintained and rate-of-change of-frequency value is forced to 0 at this reporting instance.

PMU 1 PHS-1 to PMU 1 PHS-14

These settings specify synchrophasors to be transmitted from the superset of all synchronized measurements. The table outlines available synchrophasor values.

Selection	Meaning
Va	First voltage channel, either Va or Vab
Vb	Second voltage channel, either Vb or Vbc
Vc	Third voltage channel, either Vc or Vca
Vx	Fourth voltage channel
Ia	Phase A current, physical channel or summation as per the source settings
Ib	Phase B current, physical channel or summation as per the source settings
Ic	Phase C current, physical channel or summation as per the source settings
Ig	Fourth current channel, physical or summation as per the source settings
V1	Positive-sequence voltage, referenced to Va
V2	Negative-sequence voltage, referenced to Va
V0	Zero-sequence voltage
I1	Positive-sequence current, referenced to Ia
I2	Negative-sequence current, referenced to Ia
I0	Zero-sequence current

These settings allow for optimizing the frame size and maximizing transmission channel usage, depending on a given application. Select “Off” to suppress transmission of a given value.

PMU 1 PHS-1 NM to PMU 1 PHS-14 NM

These settings allow for custom naming of the synchrophasor channels. Sixteen-character ASCII strings are allowed as in the CHNAM field of the configuration frame. These names are typically based on station, bus, or breaker names.

PMU 1 A-CH-1 to PMU 1 A-CH-16

These settings specify any analog data measured by the relay to be included as a user-selectable analog channel of the data frame. Up to eight analog channels can be configured to send any FlexAnalog value from the relay. Examples include frequency, rate of frequency change, active and reactive power, per phase or three-phase power, power factor, temperature via RTD inputs, and THD. The configured analog values are sampled concurrently with the synchrophasor instant and sent as 32-bit floating-point values scaled to Engineering units.

PMU 1 A-CH-1 NM to PMU 1 A-CH-16 NM

These settings allow for custom naming of the analog channels. Sixteen-character ASCII strings are allowed as in the CHNAM field of the configuration frame.

PMU 1 D-CH-1 to PMU 1 D-CH-16

These settings specify any digital flag measured by the relay to be included as a user-selectable digital channel of the data frame. Up to 16 digital channels can be configured to send any FlexLogic operand from the relay. The configured digital flags are sampled concurrently with the synchrophasor instant. These values are mapped into a

two-byte integer number, with byte 1 LSB corresponding to the digital channel 1 and byte 2 MSB corresponding to digital channel 16.

PMU 1 D-CH-1 NM to PMU 1 D-CH-16 NM

These settings allow for custom naming of the digital channels. Sixteen-character ASCII strings are allowed as in the CHNAM field of the configuration frame.

PMU 1 D-CH-1 NORMAL STATE to PMU 1 D-CH-16 NORMAL STATE

These settings allow for specifying a normal state for each digital channel. These states are transmitted in configuration frames to the data concentrator.

Submenu for C37.118 configuration

The basic configuration men also contains a submenu for the C37.118 configuration as follows:

Setting path: ***SETTINGS > SYSTEM SETUP > PHASOR MEASUREMENT UNIT > PHASOR MEASUREMENT UNIT > PMU 1 BASIC CONFIGURATION > C37.118 PMU 1 CONFIGURATION***

■ C37.118 PMU 1 ■ CONFIGURATION	⇔	PMU 1 FORMAT: Integer	Range: Integer, Floating-point
	⇕	PMU 1 FREQ FORMAT: Integer	Range: Integer, Floating-point
	⇕	PMU 1 STYLE: Polar	Range: Polar, Rectangular

PMU 1 FORMAT

This setting selects whether synchrophasors are reported as 16-bit integers or 32-bit IEEE floating point numbers. This setting complies with bit-1 of the FORMAT field of the IEEE C37.118 configuration frame. This setting applies to synchrophasors only; user-selectable FlexAnalog channels are always transmitted as 16-bit integer values.

PMU 1 FREQ FORMAT

This setting selects between reporting frequency and rate-of-change-of-frequency as 16-bit integer or 32-bit IEEE floating point numbers. This setting complies with bit 3 of the FORMAT field of the C37.118 configuration frame.

PMU 1 STYLE

This setting selects whether synchrophasors are reported in rectangular (real and imaginary) coordinates or in polar (magnitude and angle) coordinates. This setting complies with bit-0 of the FORMAT field of the IEEE C37.118 configuration frame.

The basic configuration men also contains a submenu for the IEC61850-90-5 configuration as follows:

Setting path: ***SETTINGS > SYSTEM SETUP > PHASOR MEASUREMENT UNIT > PHASOR MEASUREMENT UNIT > PMU 1 BASIC CONFIGURATION > 90-5 PMU 1 CONFIGURATION***

■ 90-5 PMU 1 ■ CONFIGURATION	⇔	PMU 1 LDINST: PMU1	Range: 64 char ASCII text

Note:
With 90-5 PMU, the FORMAT and STYLE are Floating-point and Polar respectively, as specified in the IEC 61850-90-5 technical report.

8.7.1.2 PMU CALIBRATION

Up to six PMUs are available, depending on UR model and option choice. Only one is shown here.

Setting path: ***SETTINGS > SYSTEM SETUP > PHASOR MEASUREMENT UNIT > PHASOR MEASUREMENT UNIT <n> PMU <n> CALIBRATION***

■ PMU 1 ■ CALIBRATION	⇔	PMU 1 VA CALIBRATION ANGLE: 0.00°	Range: –5.00 to 5.00° in steps of 0.05
	⇕	PMU 1 VA CALIBRATION MAG: 100.0%	Range: 95.0 to 105.0 in steps of 0.1%
	⇕	PMU 1 VB CALIBRATION ANGLE: 0.00°	Range: –5.00 to 5.00° in steps of 0.05
	⇕	PMU 1 VB CALIBRATION MAG: 100.0%	Range: 95.0 to 105.0 in steps of 0.1%
	⇕	PMU 1 VC CALIBRATION ANGLE: 0.00°	Range: –5.00 to 5.00° in steps of 0.05
	⇕	PMU 1 VC CALIBRATION MAG: 100.0%	Range: 95.0 to 105.0 in steps of 0.1%
	⇕	PMU 1 VX CALIBRATION ANGLE: 0.00°	Range: –5.00 to 5.00° in steps of 0.05
	⇕	PMU 1 VX CALIBRATION MAG: 100.0%	Range: 95.0 to 105.0 in steps of 0.1%
	⇕	PMU 1 IA CALIBRATION ANGLE: 0.00°	Range: –5.00 to 5.00° in steps of 0.05
	⇕	PMU 1 IA CALIBRATION MAG: 100.0%	Range: 95.0 to 105.0 in steps of 0.1%
	⇕	PMU 1 IB CALIBRATION ANGLE: 0.00°	Range: –5.00 to 5.00° in steps of 0.05
	⇕	PMU 1 IB CALIBRATION MAG: 100.0%	Range: 95.0 to 105.0 in steps of 0.1%
	⇕	PMU 1 IC CALIBRATION ANGLE: 0.00°	Range: –5.00 to 5.00° in steps of 0.05
	⇕	PMU 1 IC CALIBRATION MAG: 100.0%	Range: 95.0 to 105.0 in steps of 0.1%
	⇕	PMU 1 IG CALIBRATION ANGLE: 0.00°	Range: –5.00 to 5.00° in steps of 0.05
	⇕	PMU 1 IG CALIBRATION MAG: 100.0%	Range: 95.0 to 105.0 in steps of 0.1%
	⇕	PMU 1 SEQ VOLT SHIFT ANGLE: 0°	Range: –180 to 180° in steps of 30
	⇧	PMU 1 SEQ CURR SHIFT ANGLE: 0°	Range: –180 to 180° in steps of 30

This menu contains user angle and magnitude calibration data for the Phasor Measurement Unit (PMU). This data is combined with the factory adjustments to shift the phasors for better accuracy.

PMU 1 VA... IG CALIBRATION ANGLE

These settings recognize applications with protection class voltage and current sources, and they allow you to calibrate each channel (four voltages and four currents) individually to offset errors introduced by VTs, CTs, and

cabling. The setting values are effectively added to the measured angles. Therefore, enter a positive correction when the secondary signal lags the true signal and a negative value when the secondary signal leads the true signal.

PMU 1 VA... IG CALIBRATION MAGNITUDE

These settings recognize applications with protection class voltage and current sources, and they allow you to calibrate each channel (four voltages and four currents) individually to offset errors introduced by VTs, CTs. The setting values are effectively a multiplier of the measured magnitudes. Therefore, entering a multiplier greater than 100% of the secondary signal increases the true signal, and a multiplier less than 100% value of the secondary signal reduces the true signal.

PMU 1 SEQ VOLT SHIFT ANGLE

This setting allows you to correct positive- and negative-sequence voltages for vector groups of power transformers located between the PMU voltage point and the reference node. This angle is effectively added to the positive-sequence voltage angle and subtracted from the negative-sequence voltage angle. Note that:

- When this setting is not “0°”, the phase and sequence voltages do not agree. Unlike sequence voltages, the phase voltages cannot be corrected in a general case and therefore are reported as measured.
- When receiving synchrophasor data at multiple locations, with possibly different reference nodes, it can be more beneficial to allow the central locations to perform the compensation of sequence voltages.
- This setting applies to PMU data only. The relay calculates symmetrical voltages independently for protection and control purposes without applying this correction.
- When connected to line-to-line voltages, the PMU calculates symmetrical voltages with the reference to the AG voltage and not to the physically connected AB voltage.

PMU 1 SEQ CURR SHIFT ANGLE

This setting allows you to correct positive and negative-sequence currents for vector groups of power transformers located between the PMU current point and the reference node. The setting has the same meaning for currents as the ***PMU 1 SEQ VOLT SHIFT ANGLE*** setting has for voltages. Normally, you would set the two correcting angles identically, except in rare applications when the voltage and current measuring points are located at different windings of a power transformer.

8.7.1.3 PMU TRIGGERING OVERVIEW

Setting path: ***SETTINGS > SYSTEM SETUP > PHASOR MEASUREMENT UNIT > PHASOR MEASUREMENT UNIT 1 > PMU TRIGGERING***

■ PMU 1 ■ TRIGGERING	⇔	■ PMU 1 USER ■ TRIGGER
	⇕	■ PMU 1 FREQUENCY ■ TRIGGER
	⇕	■ PMU 1 VOLTAGE ■ TRIGGER
	⇕	■ PMU 1 CURRENT ■ TRIGGER
	⇕	■ PMU 1 POWER ■ TRIGGER
	⇧	■ PMU 1 df/dt ■ TRIGGER

Each Phasor Measurement Unit (PMU) contains five triggering mechanisms to facilitate triggering of the associated PMU recorder, or cross-triggering of other PMUs in the system. They are

- Overfrequency and underfrequency
- Overvoltage and undervoltage
- Overcurrent
- Overpower
- High rate of change of frequency

The pre-configured triggers can be augmented with a user-specified condition built freely using programmable logic of the relay. The entire triggering logic is refreshed once every two power system cycles. All five triggering functions and the user-definable condition are consolidated (ORed) and connected to the PMU recorder. Each trigger can be programmed to log its operation into the event recorder and to signal its operation via targets. The five triggers drive the STAT bits of the data frame to inform the destination of the synchrophasor data regarding the cause of trigger. The following convention is adopted to drive bits 11, 3, 2, 1, and 0 of the STAT word.

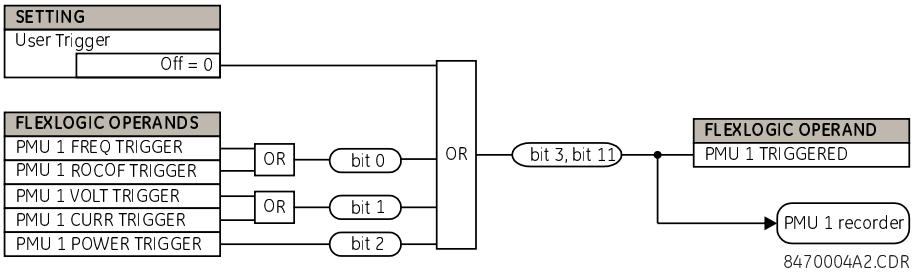

Figure 205: STAT bits logic

The trigger reset (drop-off) timer is available for all five triggering functions (FREQ, ROCOF, VOLT, CURR, POWER) in individual trigger settings under the ***TRIGGER DPO TIME*** setting. This asserts individual trigger operand and overall PMU x TRIGGERED operand with stat bits 3 and 11 for a fixed interval defined by this setting. If it is required that PMU x TRIGGERED operand with stat bits 3 and 11 stay longer than the individual reset timer, then use the ***PMU x USER TRIGGER*** setting assigned with appropriate elements and FlexLogic. In short, in case of ***USER TRIGGER***, the drop-off time needs to be implemented using FlexLogic.

8.7.1.3.1 USER TRIGGERING

Setting path: ***SETTINGS > SYSTEM SETUP > PHASOR MEASUREMENT UNIT > PHASOR MEASUREMENT UNIT 1 > PMU TRIGGERING > PMU 1 USER TRIGGER***

■ PMU 1 USER ■ TRIGGER	⇔	■ PMU 1 USER TRIGGER ■ Off	Range: FlexLogic operand

The user trigger allows you to construct customized triggering from FlexLogic. The entire triggering logic is refreshed every two power system cycles.

8.7.1.3.2 FREQUENCY TRIGGERING

Setting path: ***SETTINGS > SYSTEM SETUP > PHASOR MEASUREMENT UNIT > PHASOR MEASUREMENT UNIT 1 > PMU TRIGGERING > PMU 1 TRIGGERING > PMU 1 FREQUENCY TRIGGER***

■ PMU 1 FREQUENCY ■ TRIGGER	⇔	PMU 1 FREQ TRIGGER FUNCTION: Disabled	Range: Enabled, Disabled
	⇕	PMU 1 FREQ TRIGGER LOW-FREQ: 49.00 Hz	Range: 20.00 to 70.00 Hz in steps of 0.01
	⇕	PMU 1 FREQ TRIGGER HIGH-FREQ: 61.00 Hz	Range: 20.00 to 70.00 Hz in steps of 0.01

⇕	PMU 1 FREQ TRIGGER PKP TIME: 0.10 s	Range: 0.00 to 600.00 s in steps of 0.01
⇕	PMU 1 FREQ TRIGGER DPO TIME: 1.00 s	Range: 0.00 to 600.00 s in steps of 0.01
⇕	PMU 1 FREQ TRIG BLK: Off	Range: FlexLogic operand
⇕	PMU 1 FREQ TRIGGER TARGET: Self-reset	Range: Self-reset, Latched, Disabled
⇧	PMU 1 FREQ TRIGGER EVENTS: Disabled	Range: Enabled, Disabled

The trigger responds to the frequency signal of the Phasor Measurement Unit (PMU) source. The frequency is calculated from a selection of phase voltages, auxiliary voltage, phase currents, and ground current, depending on the source configuration. This element requires that the frequency is above the minimum measurable value. If the frequency is below this value, the trigger drops out.

PMU 1 FREQ TRIGGER FUNCTION

This setting enables or disabled the frequency trigger function.

PMU 1 FREQ TRIGGER LOW-FREQ

This setting specifies the low threshold for the abnormal frequency trigger. The comparator applies a 0.02 Hz hysteresis.

PMU 1 FREQ TRIGGER HIGH-FREQ

This setting specifies the high threshold for the abnormal frequency trigger. The comparator applies a 0.02 Hz hysteresis.

PMU 1 FREQ TRIGGER PKP TIME

This setting is used to filter out spurious conditions and avoid unnecessary triggering of the recorder.

PMU 1 FREQ TRIGGER DPO TIME

This setting is used to extend the trigger after the situation returns to normal. This setting is important when using the recorder in forced mode (recording as long as the triggering condition is asserted).

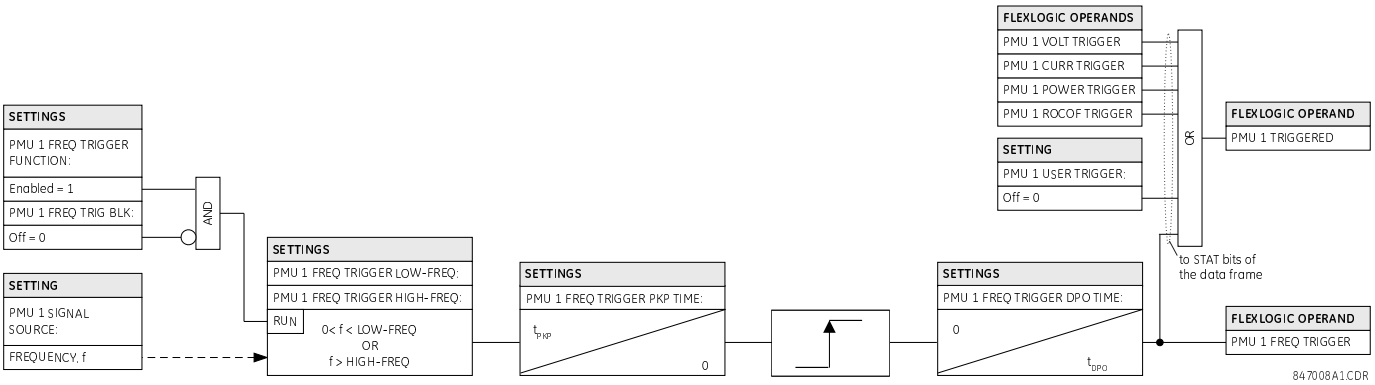

Figure 206: Frequency trigger logic

8.7.1.3.3 VOLTAGE TRIGGERING

Setting path: ***SETTINGS > SYSTEM SETUP > PHASOR MEASUREMENT UNIT > PHASOR MEASUREMENT UNIT 1 > PMU TRIGGERING > PMU 1 TRIGGERING > PMU 1 VOLTAGE TRIGGER***

■ PMU 1 VOLTAGE ■ TRIGGER	⇔	PMU 1 VOLT TRIGGER FUNCTION: Disabled	Range: Enabled, Disabled
	⇕	PMU 1 VOLT TRIGGER LOW-VOLT: 0.800 pu	Range: 0.250 to 1.250 pu in steps of 0.001
	⇕	PMU 1 VOLT TRIGGER HIGH-VOLT: 1.200 pu	Range: 0.750 to 1.750 pu in steps of 0.001
	⇕	PMU 1 VOLT TRIGGER PKP TIME: 0.10 s	Range: 0.00 to 600.00 s in steps of 0.01
	⇕	PMU 1 VOLT TRIGGER DPO TIME: 1.00 s	Range: 0.00 to 600.00 s in steps of 0.01
	⇕	PMU 1 VOLT TRIG BLK: Off	Range: FlexLogic operand
	⇕	PMU 1 VOLT TRIGGER TARGET: Self-reset	Range: Self-reset, Latched, Disabled
	⇧	PMU 1 VOLT TRIGGER EVENTS: Disabled	Range: Enabled, Disabled

This element responds to abnormal voltage. Separate thresholds are provided for low and high voltage. In terms of signaling its operation, the element does not differentiate between the undervoltage and overvoltage events. The trigger responds to the phase voltage signal of the Phasor Measurement Unit (PMU) source. All voltage channels (A, B, and C or AB, BC, and CA) are processed independently and can trigger the recorder. A minimum voltage supervision of 0.1 pu is implemented to prevent pickup on a de-energized circuit, similarly to the undervoltage protection element.

PMU 1 VOLT TRIGGER FUNCTION

This setting enables or disabled the voltage trigger function.

PMU 1 VOLT TRIGGER LOW-VOLT

This setting specifies the low threshold for the abnormal voltage trigger, in per-unit of the PMU source. 1 pu is a nominal voltage value defined as the nominal secondary voltage times VT ratio. The comparator applies a 1% hysteresis.

PMU 1 VOLT TRIGGER HIGH-VOLT

This setting specifies the high threshold for the abnormal voltage trigger, in per-unit of the PMU source. 1 pu is a nominal voltage value defined as the nominal secondary voltage times VT ratio. The comparator applies a 1% hysteresis.

PMU 1 VOLT TRIGGER PKP TIME

This setting is used to filter out spurious conditions and avoid unnecessary triggering of the recorder.

PMU 1 VOLT TRIGGER DPO TIME

This setting is used to extend the trigger after the situation returns to normal. This setting is important when using the recorder in the forced mode (recording as long as the triggering condition is asserted).

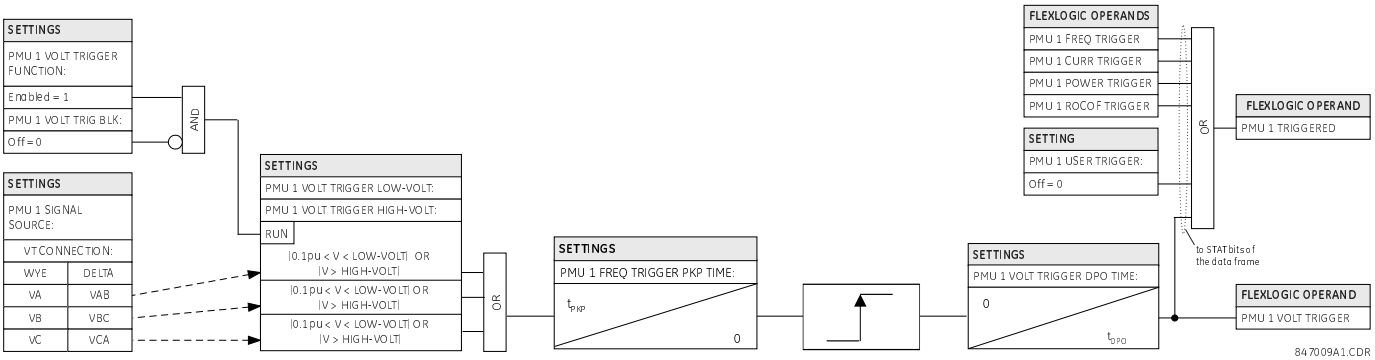

Figure 207: Voltage trigger logic

8.7.1.3.4 CURRENT TRIGGERING

Setting path: ***SETTINGS > SYSTEM SETUP > PHASOR MEASUREMENT UNIT > PHASOR MEASUREMENT UNIT 1 > PMU TRIGGERING > PMU 1 TRIGGERING > PMU 1 CURRENT TRIGGER***

■ PMU 1 CURRENT ■ TRIGGER	⇔	PMU 1 CURR TRIGGER FUNCTION: Disabled — Range: Enabled, Disabled
	⇕	PMU 1 CURR TRIGGER PICKUP: 1.800 pu — Range: 0.100 to 30.000 pu in steps of 0.001
	⇕	PMU 1 CURR TRIGGER PKP TIME: 0.10 s — Range: 0.00 to 600.00 s in steps of 0.01
	⇕	PMU 1 CURR TRIGGER DPO TIME: 1.00 s — Range: 0.00 to 600.00 s in steps of 0.01
	⇕	PMU 1 CURR TRIG BLK: Off — Range: FlexLogic operand
	⇕	PMU 1 CURR TRIGGER TARGET: Self-reset — Range: Self-reset, Latched, Disabled
	⇑	PMU 1 CURR TRIGGER EVENTS: Disabled — Range: Enabled, Disabled

This element responds to elevated current. The trigger responds to the phase current signal of the Phasor Measurement Unit (PMU) source. All current channel (A, B, and C) are processed independently and can trigger the recorder.

PMU 1 CURR TRIGGER FUNCTION

This setting enables or disabled the current trigger function.

PMU 1 CURR TRIGGER PICKUP

This setting specifies the pickup threshold for the overcurrent trigger, in per unit of the PMU source. A value of 1 pu is a nominal primary current. The comparator applies a 3% hysteresis.

PMU 1 CURR TRIGGER PKP TIME

This setting is used to filter out spurious conditions and avoid unnecessary triggering of the recorder.

PMU 1 CURR TRIGGER DPO TIME

This setting is used to extend the trigger after the situation returns to normal. This setting is important when using the recorder in the forced mode (recording as long as the triggering condition is asserted).

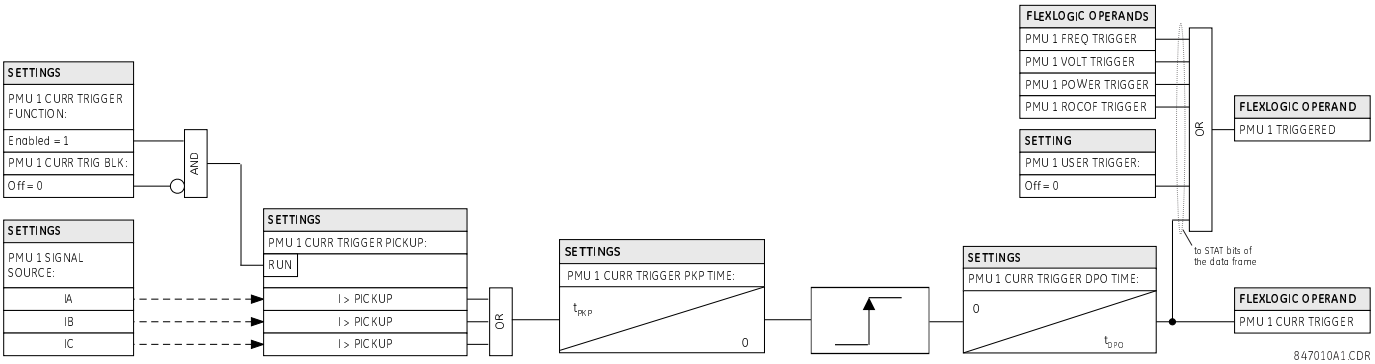

Figure 208: Current trigger logic

8.7.1.3.5 POWER TRIGGERING

Setting path: ***SETTINGS > SYSTEM SETUP > PHASOR MEASUREMENT UNIT > PHASOR MEASUREMENT UNIT 1 > PMU TRIGGERING > PMU 1 TRIGGERING > PMU 1 POWER TRIGGER***

■ PMU 1 POWER ■ TRIGGER	⇔	PMU 1 POWER TRIGGER FUNCTION: Disabled — Range: Enabled, Disabled
	⇕	PMU 1 POWER TRIGGER ACTIVE: 1.250 pu — Range: 0.250 to 3.000 pu in steps of 0.001
	⇕	PMU 1 POWER TRIGGER REACTIVE: 1.250 pu — Range: 0.250 to 3.000 pu in steps of 0.001
	⇕	PMU 1 POWER TRIGGER APPARENT: 1.250 pu — Range: 0.250 to 3.000 pu in steps of 0.001
	⇕	PMU 1 POWER TRIGGER PKP TIME: 0.10 s — Range: 0.00 to 600.00 s in steps of 0.01
	⇕	PMU 1 POWER TRIGGER DPO TIME: 1.00 s — Range: 0.00 to 600.00 s in steps of 0.01
	⇕	PMU 1 PWR TRIG BLK: Off — Range: FlexLogic operand
	⇕	PMU 1 POWER TRIGGER TARGET: Self-reset — Range: Self-reset, Latched, Disabled
	⇑	PMU 1 POWER TRIGGER EVENTS: Disabled — Range: Enabled, Disabled

This element responds to abnormal power. Separate thresholds are provided for active, reactive, and apparent powers. In terms of signaling its operation, the element does not differentiate among the three types of power. The trigger responds to the single-phase and three-phase power signals of the Phasor Measurement Unit (PMU) source.

PMU 1 POWER TRIGGER FUNCTION

This setting enables or disabled the power trigger function.

PMU 1 POWER TRIGGER ACTIVE

This setting specifies the pickup threshold for the active power of the source. For single-phase power, 1 pu is a product of 1 pu voltage and 1 pu current, or the product of nominal secondary voltage, the VT ratio and the nominal primary current. For the three-phase power, 1 pu is three times that for a single-phase power. The comparator applies a 3% hysteresis.

PMU 1 POWER TRIGGER REACTIVE

This setting specifies the pickup threshold for the reactive power of the source. For single-phase power, 1 pu is a product of 1 pu voltage and 1 pu current, or the product of nominal secondary voltage, the VT ratio and the nominal primary current. For the three-phase power, 1 pu is three times that for a single-phase power. The comparator applies a 3% hysteresis.

PMU 1 POWER TRIGGER APPARENT

This setting specifies the pickup threshold for the apparent power of the source. For single-phase power, 1 pu is a product of 1 pu voltage and 1 pu current, or the product of nominal secondary voltage, the VT ratio and the nominal primary current. For the three-phase power, 1 pu is three times that for a single-phase power. The comparator applies a 3% hysteresis.

PMU 1 POWER TRIGGER PKP TIME

This setting is used to filter out spurious conditions and avoid unnecessary triggering of the recorder.

PMU 1 POWER TRIGGER DPO TIME

This setting is used to extend the trigger after the situation returns to normal. This setting is of particular importance when using the recorder in the forced mode (recording as long as the triggering condition is asserted).

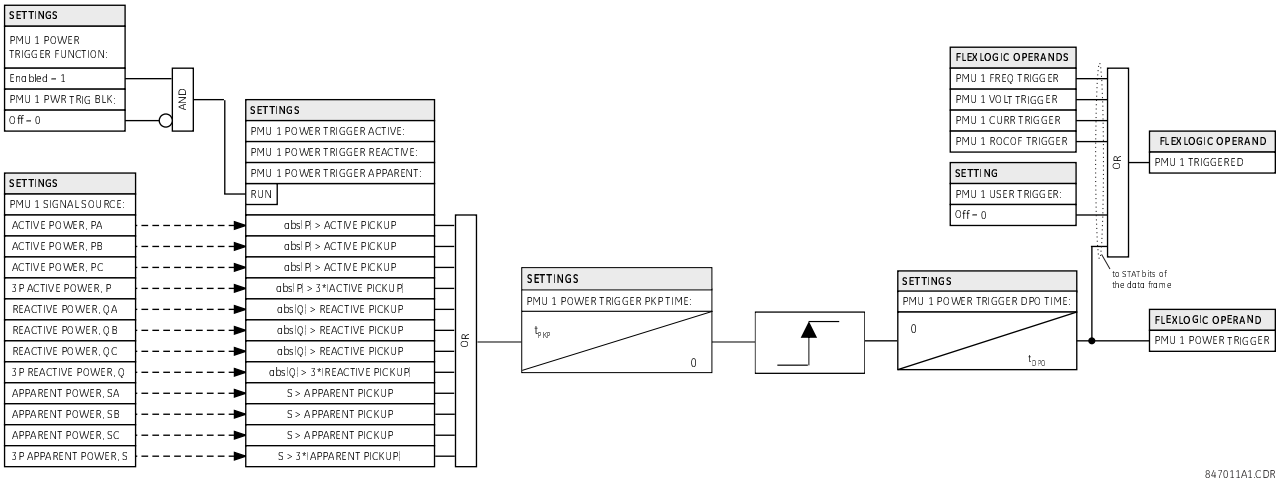

Figure 209: Power trigger logic

8.7.1.3.6 RATE OF CHANGE OF FREQUENCY TRIGGERING

Setting path: ***SETTINGS > SYSTEM SETUP > PHASOR MEASUREMENT UNIT > PHASOR MEASUREMENT UNIT 1 > PMU TRIGGERING > PMU 1 TRIGGERING > PMU 1 df/dt TRIGGER***

■ PMU 1 df/dt ■ TRIGGER	⇔	PMU 1 df/dt TRIGGER FUNCTION: Disabled	Range: Enabled, Disabled
	⇕	PMU 1 df/dt TRIGGER RAISE: 0.25 Hz/s	Range: 0.10 to 15.00 Hz/s in steps of 0.01
	⇕	PMU 1 df/dt TRIGGER FALL: 0.25 Hz/s	Range: 0.10 to 15.00 Hz/s in steps of 0.01
	⇕	PMU 1 df/dt TRIGGER PKP TIME: 0.10 s	Range: 0.00 to 600.00 s in steps of 0.01
	⇕	PMU 1 df/dt TRIGGER DPO TIME: 1.00 s	Range: 0.00 to 600.00 s in steps of 0.01
	⇕	PMU 1 df/dt TRG BLK: Off	Range: FlexLogic operand

⇕	PMU 1 df/dt TRIGGER TARGET: Self-reset	Range: Self-reset, Latched, Disabled
⇧	PMU 1 df/dt TRIGGER EVENTS: Disabled	Range: Enabled, Disabled

This element responds to frequency rate of change. Separate thresholds are provided for rising and dropping frequency. The trigger responds to the rate of change of frequency (df/dt) of the Phasor Measurement Unit (PMU) source.

PMU 1 df/dt TRIGGER FUNCTION

This setting enables or disabled the power trigger function.

PMU 1 df/dt TRIGGER RAISE

This setting specifies the pickup threshold for the rate of change of frequency in the raising direction (positive df/dt). The comparator applies a 4% hysteresis.

PMU 1 df/dt TRIGGER FALL

This setting specifies the pickup threshold for the rate of change of frequency in the falling direction (negative df/dt). The comparator applies a 4% hysteresis.

PMU 1 df/dt TRIGGER PKP TIME

This setting is used to filter out spurious conditions and avoid unnecessary triggering of the recorder.

PMU 1 df/dt TRIGGER DPO TIME

This setting is used to extend the trigger after the situation returns to normal. This setting is of importance when using the recorder in the forced mode (recording as long as the triggering condition is asserted).

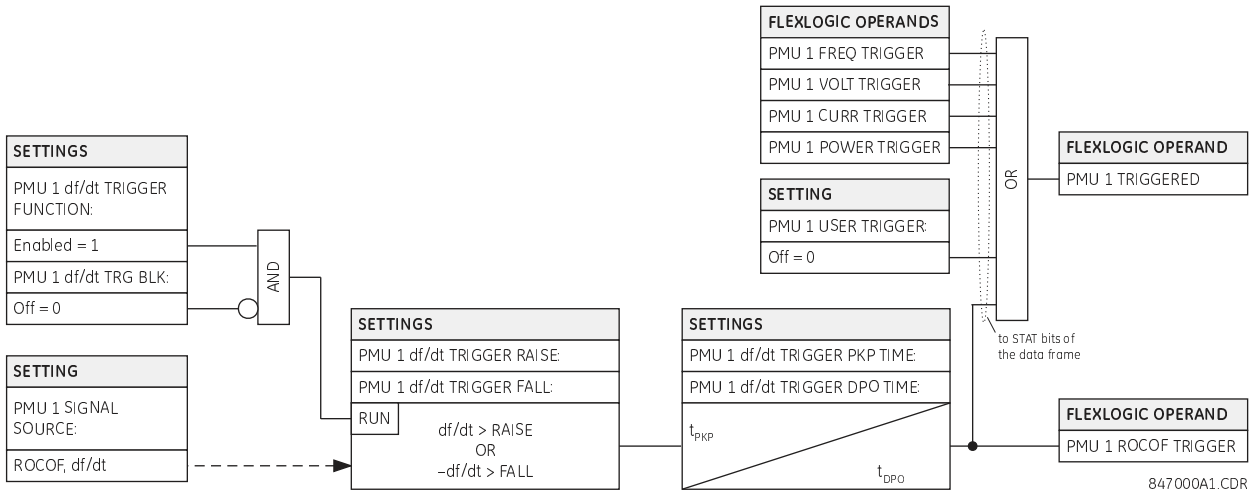

Figure 210: Rate of Change of frequency trigger logic

8.7.1.4 PMU RECORDING

Setting path: ***SETTINGS > SYSTEM SETUP > PHASOR MEASUREMENT UNIT > PHASOR MEASUREMENT UNIT 1 > PMU TRIGGERING > PMU 1 RECORDING***

■ PMU 1 ■ RECORDING	⇔	PMU 1 FUNCTION: Disabled	Range: Enabled, Disabled
	⇕	PMU 1 NO OF TIMED RECORDS: 10	Range: 2 to 128 in steps of 1

⇕	PMU 1 TRIGGER MODE: Automatic Overwrite	Range: Automatic Overwrite, Protected
⇧	PMU 1 TIMED TRIGGER POSITION: 10%	Range: 1 to 50% in steps of 1

The length of the PMU record is variable. It depends on some settings and configuration, such as ***PMU 1 NO OF TIMED RECORDS***, ***PMU 1 RATE***, the number of Synchrophasors etc. There is a fixed amount of data storage for PMU recording. The more records captured, the less the recording length captured per record. See the ***ACTUAL VALUES > RECORDS > PMU RECORDS > PMU 1 RECORDING*** menu to view the actual PMU record length captured per record. The following table provides sample configurations with corresponding seconds per record. The minimum number of PMU records is two. The third to fifth columns is the number of configured values recorded in each record.

Records	Frames per sec.	Synchrophasors	Analogs	Digitals	Record length
3	30	14	8	16	590.4
16	30	14	8	16	138.9
32	30	14	8	16	71.5
64	30	14	8	16	36.3
3	60	14	8	16	295.2
16	60	14	8	16	69.4
32	60	14	8	16	35.7
64	60	14	8	16	18.1

PMU 1 FUNCTION

This setting enables or disables the recorder for PMU 1. The rate is fixed at the reporting rate set within the aggregator.

PMU 1 NO OF TIMED RECORDS

This setting specifies the number of timed records that are available for a given logical PMU 1. The length of each record is equal to the available memory divided by the content size and number of records. As the number of records is increased, the available storage for each record is reduced. The relay supports a maximum of 128 records in either timed or forced mode.

PMU 1 TRIGGER MODE

This setting specifies what happens when the recorder uses its entire available memory storage. With `Automatic Overwrite`, the last record is erased to facilitate new recording, when triggered. Under the “Protected” selection, the recorder stops creating new records when the entire memory is used up by the old uncleared records.

PMU 1 TIMED TRIGGER POSITION

This setting specifies the amount of pre-trigger data as a percent of the entire record. This setting applies only to the timed mode of recording.

8.7.2 AGGREGATORS

Depending on the UR model, up to four aggregators may be available. Only one is shown here.

Setting path: ***SETTINGS > SYSTEM SETUP > PHASOR MEASUREMENT UNIT > PMU AGGREGATOR 1***

■ PMU AGGREGATOR 1 ■	⇔	PMU AGGREGATOR 1 PROTOCOL: NONE	Range: NONE, 37.118, 90-5

⇕	PMU AGGREGATOR 1 IDCODE: 1	Range: 1 to 65534 in steps of 1
⇕	PMU AGGREGATOR 1 INCLUDE PMU1: No	Range: No, Yes
⇕	■ C37.118 AGGR 1 ■ CONFIGURATION	
⇧	■ 90-5 AGGR 1 ■ CONFIGURATION	

It is not possible to stream both IEEE C37.118 and IEC 61850-90-5 simultaneously. When the protocol selection is set via the software or keypad, any aggregators whose protocol is not set to `None` are set to the last protocol saved.

PMU AGGREGATOR1 PROTOCOL

This setting selects the protocol; IEEE C37.118 or IEC 61850-90-5. Because only one protocol is supported at a time in a device, this setting applies to all PMU aggregators in the device.

PMU AGGREGATOR1 IDCODE

This is a numeric identifier of the Aggregator / PDC function. In an IEEE C37.118 output stream, this identifies the ID of the aggregator, which is only used if there is more than 1 PMU mapped into an aggregator.

PMU AGGREGATOR1 PMU1

This setting decides whether the Aggregator includes the data set in the reporting data stream or not.

The ***PMU AGGREGATOR 1*** setting includes two further submenus for configuring the protocols:

- c37.118 AGGR 1 CONFIGURATION
- 90-5 AGGR 1 CONFIGURATION

> *Note:*
> *Only PMUs with same reporting rate can be assigned to the same PMU AGGREGATOR*

8.7.2.1 C37.118 AGGREGATOR CONFIGURATION

Depending on the UR model, up to four aggregators may be available. Only one is shown here.

Setting path: ***SETTINGS > SYSTEM SETUP > PHASOR MEASUREMENT UNIT > PMU AGGREGATOR 1 C37.118 AGGR 1 CONFIGURATION***

■ C37.118 AGGR 1 ■ CONFIGURATION	⇔	PMU AGGREGATOR 1 TCP PORT: 4712	Range: 0 to 65534 Default:4712
	⇕	PMU AGGREGATOR 1: UDP PORT: 4713	Range: 0 to 65534 Default:4713
	⇕	PMU AGGREGATOR 1: PDC CONTROL: Disabled	Range: Disabled, Enabled Default:Disabled
	⇕	PMU AGGREGATOR 1: SPONT MODE: Disabled	Range: Disabled, Port1, Port2, Port3 Default: Disabled
	⇕	PMU AGGREGATOR 1 MC IP: 0.0.0.0	Range: 0.0.0.0 to 239.255.255.255 Default: 0.0.0.0
	⇕	PMU AGGREGATOR 1: MC DST PORTL: 5000	Range:1-65534 Default:5000

⇧	PMU AGGREGATOR 1 CFG FRAME: CFG-3	Range: CFG1, CFG2, CFG3, CFG2+CFG3, CFG1+HDR, CFG2+ HDR, CFG3+ HDR, CFG2+CFG3+HDR Default:CFG3

PMU AGGREGATOR 1 TCP PORT

This setting selects the TCP port number to be used by this aggregator for network reporting. All ports, even those of unused aggregators, must be valid and unique to avoid port number collisions.

PMU AGGREGATOR 1 UDP PORT

This setting selects the UDP port number to be used by this aggregator for network reporting. All ports, even those of unused aggregators, must be valid and unique to avoid port number collisions.

PMU AGGREGATOR 1 PDC CONTROL

The synchrophasor standard allows for user-defined controls originating at the PDC (phasor data concentrator), to be executed on the PMU. The control is accomplished via an extended command frame. The relay decodes the first word of the extended field, EXTFRAME, to drive 16 dedicated FlexLogic operands. Each aggregator supports 16 FlexLogic operands, as shown in the following table. The operands are asserted for five seconds following reception of the command frame. If the new command frame arrives within the five-second period, the FlexLogic operands are updated, and the five-second timer restarts. This setting enables or disables the control.

Operand type	Operand syntax	Operand description
ELEMENT: Synchrophasor, phasor data, concentrator	AGTR1 PDC CNTRL 1	Phasor data concentrator asserts control bit 1, as received via the network
As above	AGTR1 PDC CNTRL 2	Phasor data concentrator asserts control bit 2 as received via the network
As above	AGTR1 PDC CNTRL 3	Phasor data concentrator asserts control bit 3 as received via the network
As above	AGTR1 PDC CNTRL 16	Phasor data concentrator asserts control bit 16, as received via the network
As above	AGTR1 PDC CNTRL 1	Phasor data concentrator asserts control bit 1, as received via the network
As above	AGTR1 PDC CNTRL 2	Phasor data concentrator asserts control bit 2 as received via the network
As above	AGTR1 PDC CNTRL 3	Phasor data concentrator asserts control bit 3 as received via the network
As above	AGTR1 PDC CNTRL 16	Phasor data concentrator asserts control bit 16, as received via the network

Note:
From UR 8.71, these settings are added to implement the PMU Multicast 'Spontaneous Mode' : PMU AGGREGATOR 1 SPONT MODE, PMU AGGREGATOR 1 SPONT MODE, PMU AGGREGATOR 1 CFG FRAME

PMU AGGREGATOR 1 SPONT MODE:

This setting allows user to decide whether the type of transmission is to be spontaneous. When disabled, the PMU can accept commands from outside, therefore the receiving device can initiate and control the flow of communication. User must use TCP or UDP for commands, header, and configuration communications.

When other than Disabled is configured, the PMU will continuously transmit the phasor data interspersed with configuration data to the UDP Multicast IP Address. When PORT1 is configured the Spontaneous synchrophasor frames will be transmitted through the Main CPU Port1, when PORT2 is configured through Port2 and through Port3 when PORT3 is selected.

In case of Network Port2 Redundancy is selected as PRP, the synchrophasor data is send on both port 2 and port3 even if the setting SPONT MODE is configured as PORT2. The Spontaneous mode is supported with the Failover redundancy mode.

PMU AGGREGATOR 1 MC IP:

This setting allows you to configure a multicast IP, so that data frames can be sent to a multicast IP address. This allows numerous clients to receive them. The Multicast feature is only enabled when you configure a valid multicast address (in the range 224.0.0.0 to 239.255.55.255). The data frames are then sent to the configured multicast IP address. However, you must use TCP or UDP for commands, header, and configuration communications. This is the Commanded Multicast Mode.

PMU AGGREGATOR 1 MC DST PORT:

This setting selects the UDP port number that will be used by this aggregator for multicast network reporting. The port value used must be unique compared to other protocol ports.

PMU AGGREGATOR 1 CFG FRAME:

This setting allows the user to select the Configuration frame or Header frame or a combination of different frames to be sent every minute in addition to the regular transmission of the phasor data. Whenever the PMU configuration is changed, or the relay is rebooted the selected frame should be sent before sending the data frames.

Configuration frames are sent:

- Every minute
- Upon relay power cycle
- Upon configuration change as indicated by Bit10 in the STAT word.

Setting	Set Value	Uni-cast	MultiCast	Commanded	Spontaneous	CPU PORT	Destination Port	IP	CFG Frame
MC IP	Out of Multicast Range								
TCP PORT	1-65534	✓	X	✓	X	PORT on which Command is received	Configured TCP Port	IP of the Client	As per Command
UDP PORT	1-65534	✓	X	✓	X	PORT on which Command is received	Configured UDP Port	IP of the Client	As per Command
MC IP	224.0.0.0 to 239.255.255.255								
SPONT MODE	DISABLED	X	✓	✓	X	PORT on which Command is received	CFG/HDR frames – Configured TCP/UDP port, depending on client command over TCP/UDP. Data frames - Configured MC DST Port	Configured MC IP	As per Unicast Command

Setting	Set Value	Uni-cast	MultiCast	Commanded	Spontaneous	CPU PORT	Destination Port	IP	CFG Frame
	PORT1	X	✓	X	✓	PORT1	Configured MC DST Port	Configured MC IP	Configured CFG Frame
	PORT2	X	✓	X	✓	PORT2	Configured MC DST Port	Configured MC IP	Configured CFG Frame
	PORT3	X	✓	X	✓	PORT3	Configured MC DST Port	Configured MC IP	Configured CFG Frame

Note:
Unicast and Multicast features are mutually exclusive for an Aggregator.

Note:
Commanded Multicast and Spontaneous Multicast features are mutually exclusive for an Aggregator.

Note:
For any change to PMU Aggregator settings, restart the relay.

8.7.2.2 IEC 61850-90-5 AGGREGATOR CONFIGURATION

Depending on the UR model, up to four aggregators may be available. Only one is shown here.

Setting path: ***SETTINGS > SYSTEM SETUP > PHASOR MEASUREMENT UNIT > PMU AGGREGATOR 1 90-5 AGGR 1 CONFIGURATION***

■ 90-5 AGGR 1 ■ CONFIGURATION	⇔	PMU AGGREGATOR 1 Name	Range: 56-character ASCII text (blank by default)
	⇕	PMU AGGREGATOR 1 PORT: 1	Range: 1, 2, 3
	⇕	PMU AGGREGATOR 1 UDP PORT: 102	Range: 0 to 65534 in steps of 1
	⇧	PMU AGGREGATOR 1 NUMBER OF ASDUs: 1	Range: 1 to 4

PMU AGGREGATOR 1 NAME

This setting allows you to enter a visible string of characters (maximum 56) to identify the source of the stream. This value, concatenated with the Aggregator IDCode and Aggregator Class of Service, is mapped into the IEC 61850 MSVID filed in the output stream. The field allows 65 characters, but uses the first 56 characters.

AGGREGATOR 1: PHYSICAL PORT

This setting determines the physical ports through which the synchrophasor traffic is transmitted. The range is 1, 2, 3.

PMU AGGREGATOR 1: UDP PORT

This setting selects the UDP port number that is used by this dataset for network reporting. A default setting value for IEC 6150-90-5 is provided.

PMU AGGREGATOR 1: NUMBER OF ASDUs

This setting sets the number of Application Service Data Units (ASDUs) from 1 through to 4.

ASDU setting	Transmission
1	ASDU at T0 (current values)
2	ASDU at T-1 (previous values) + ASDU at T0 (current values)
3	ASDU at T-2 (previous values) + ASDU at T-1 (previous values) + ASDU at T0 (current values)
4	ASDU at T-3 (previous values) + ASDU at T-2 (previous values) + ASDU at T-1 (previous values) + ASDU at T0 (current values)

8.7.3 CONTROL BLOCKS

Setting path: ***SETTINGS > SYSTEM SETUP > PHASOR MEASUREMENT UNIT > 90–5 R-SV CB 1 CONFIGURATION***

■ 90–5 R-SV CB 1 ■ CONFIGURATION	R-SV CB1 SVENA: Off	Range: FlexLogic operand
	R-SV CB1 SVENA DFLT: Off	Range: FlexLogic operand
	R-SV CB1 CONFREV: 1	Range: 1 to 4294967295
	R-SV CB1 PRIORITY: 4	Range: 0 to 7
	R-SV CB1 CSCP CLASS: Expedited Forwarding	Range: None, Expedited Forwarding
	R-SV CB1 VLAN ID: 0	Range: 0 to 4095
	R-SV CB1 APPID: 0	Range: 0 to 16383
	R-SV CB1 DEST IP: 224.0.0.0	Range: 0 to 255.255.255.255
	R-SV CB1 SECURITY: 0	Range: 0 to 2

R-SV CB1 SVENA

The SV Stream Control is set by either toggling an assigned FlexLogic operand or a remote client write, to start and stop the streaming of R-SV frames. If remote client control is disabled, a negative response is provided to the client in response to a write attempt. A FlexLogic operand (SvEna) is provided for each Aggregator that reflects the state of the SvEna control where `1` = Enabled and `0`=Disabled. The figure shows the logic for setting the SvEna control bit.

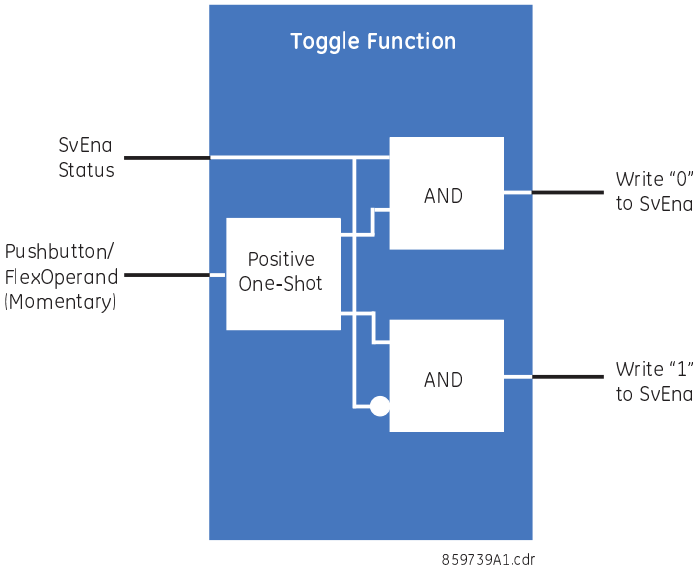

Figure 211: Logic for setting SvEna control bit

R-SV CB1 SVENA DFLT

This setting sets the default state of the stream (On or Off) on power-up or restart.

R-SV CB1 CONFREV

The relay increments the Configuration revision every time the configuration is changed. This setting allows the user to reset the configuration back to 1 or a value from 1 to 4294967295.

R-SV CB1 PRIORITY

A value from 0 through 7. The default value is 4.

R-SV CB1 DSCP CLASS

The value represents the IPv4 Differentiated Services (formerly called TypeOfService) value. The default value is set for Expedited Forwarding (101110B (46 or 2EH)). This value provides priority routing, when supported in the routers.

R-SV CB1 VLAN ID

A range of values limited from 0 to 4095.

R-SV CB1 APPID

This setting allows the selection of a specific application ID for each sending device.

R-SV CB1 DEST IP

This is the destination multicast IP address that is entered in Standard IPV4 address format. The valid range for IPv4 is from 224.0.0.0 to 239.255.255.255. The UR does not test the address entered.

R-SV CB1 SECURITY

This setting selects the level of security and authentication used, as outlined in the following table, and is in the form of an enumeration as per standard. The range is 0 to 2.

Enumeration	Authentication	Encryption
0	No	No

Enumeration	Authentication	Encryption
1 (not implemented)	Yes	No
2 (not implemented)	Yes	Yes

8.7.4 TIME QUALITY

Setting path: ***SETTINGS > SYSTEM SETUP > PHASOR MEASUREMENT UNIT > TIME QUALITY***

■ TIME QUALITY ■	⇔	HOLDOVER MODE: DISABLED	Range: DISABLED, ENABLED.
	⇧	HOLDOVER TIME: 0 minute	Range: 0 minute to 30000 minutes in steps of 1 minute.

HOLDOVER MODE

This setting allows users to apply the Holdover mode when the PTP grandmaster loses primary time reference. When the setting is enabled, depending on the clock class and clock accuracy of the PTP grandmaster, a PMU Sync Error will be set after a time defined by the setting ***HOLDOVER TIME***. When the setting is disabled, the Holdover Timer logic is not applied, and a PMU Sync error is declared as for previous versions to ensure backward compatibility.

HOLDOVER TIME

This setting specifies the wait time from the actual loss of time synchronization for the Time quality Flags to indicate that time synchronization has been lost.

After the loss of the primary reference to the PTP Grand Master, if the accuracy of the time source is not within 1 microsecond and time from the actual loss of synchronization is within the ***Holdover Time***, the ***Time Sync Lost*** flag remains *0*. After the ***Holdover Time*** expires, the ***Time Sync Lost*** flag is set to ‘1’.

The logic diagram shows the functioning of Holdover Time. the following conditions apply

- The Time sync Lost is *1*
- Bit13 (PMU Sync Error) of STAT word is set to true
- The 4-bit Message Time Quality indicator code of the FRACSEC field will indicate the actual clock accuracy.

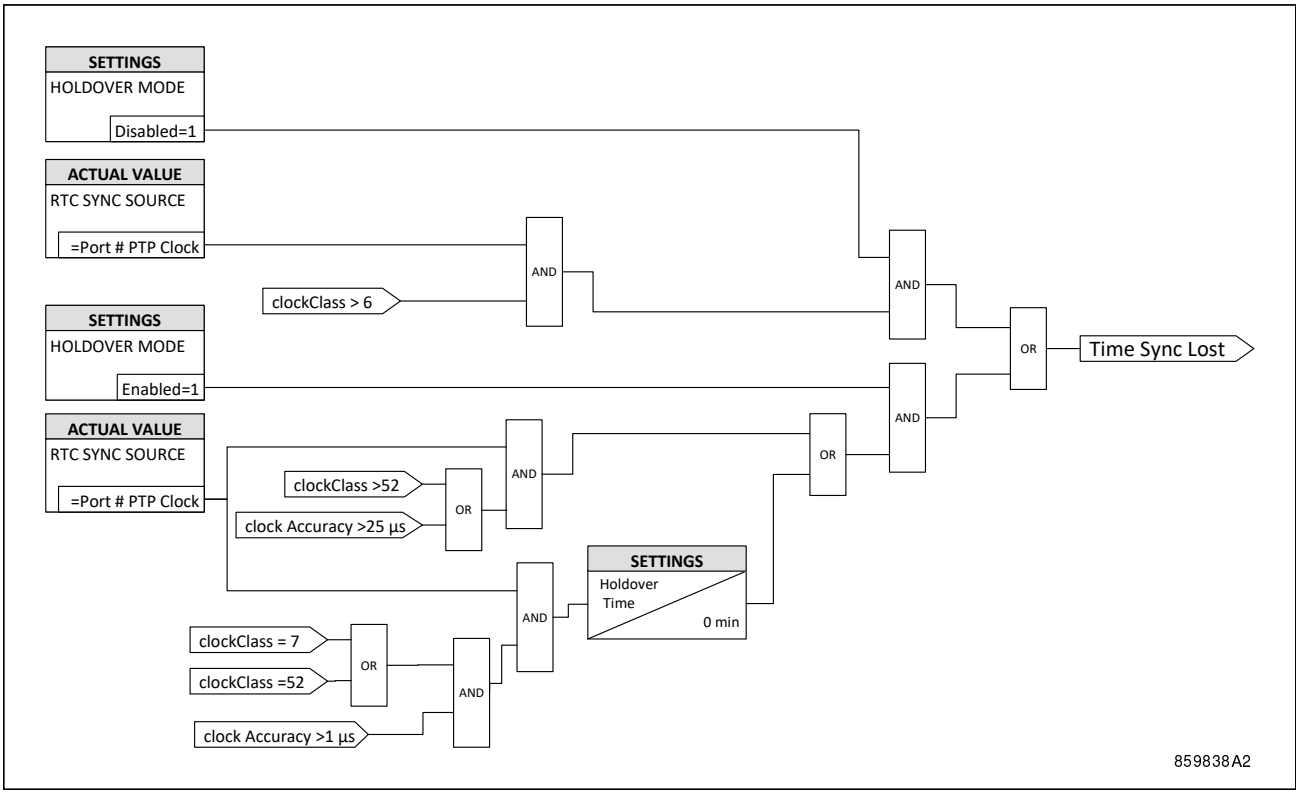

Figure 212: Holdover Time logic

CHAPTER 9

SETTINGS

9.1 CHAPTER OVERVIEW

This chapter contains the following sections:

Chapter Overview	383
Overview	384
Settings menu	388
Product setup	392
System setup	461
FlexLogic settings	517
Grouped elements	527
Control elements	639
Monitoring elements	718
Inputs/outputs	750
Transducer inputs/outputs	767
Testing	774
Simulation	782
Process Bus Settings	786
SV stream settings	792

9.2 OVERVIEW

This chapter describes the relay's settings shown on the front panel display.

You can view settings remotely in a web browser by

1. Entering the IP address of the relay
2. Accessing the **Device Information Menu** option
3. Selecting the **Front-Panel Display Report** option.

When a restart is required for a setting change to take effect, use the **Maintenance > Reboot Relay** command in the software.

Settings file conversion from previous firmware versions is supported. This is described in the Maintenance chapter.

> *Note:*
> *The relay is not taken out of service when saving settings, but it is is taken out of service when a settings file is written to it.*

9.2.1 INTRODUCTION TO ELEMENTS

The term *element* is used to describe a feature that is based around a comparator. The comparator is provided with an input (or set of inputs), which is tested against a programmed setting (or group of settings) to determine if the input is within the defined range. a logic output is set according to the result. The logic output is sometimes referred to as a *flag*. A single comparator can make multiple tests and provide multiple outputs. For example, the *time overcurrent* comparator sets a pickup flag when the current input is above the setting and sets an operate flag when the input current has been at a level above the pickup setting for the time specified by the time-current curve settings. All analog comparators use analog actual values as the input.

Elements are arranged into two classes, grouped and control. Each element classed as a grouped element is provided with six alternate sets of settings, in setting groups numbered 1 through 6. The performance of a grouped element is defined by the setting group that is active at a given time. The performance of a control element is independent of the selected active setting group.

The main characteristics of an element are shown on a logic diagram. This includes the inputs, settings, fixed logic, and the output operands generated.

Some settings are common to many elements, outlined as follows:

- ***FUNCTION*** setting — This setting programs the element to operate when selected as `Enabled`. The factory default is `Disabled`. Once `Enabled`, any element associated with the function becomes active and all options become available.
- ***NAME*** setting — This setting is used to uniquely identify the element.
- ***SOURCE*** setting — This setting is used to select the AC source to be monitored. See the Introduction to AC Sources section later.
- ***PICKUP*** setting — For simple elements, this setting is used to program the level of the measured parameter above or below which the pickup state is established. In more complex elements, a set of settings can be provided to define the range of the measured parameters that cause the element to pick up.
- ***PICKUP DELAY*** setting — This setting sets a time-delay-on-pickup, or on-delay, for the duration between the pickup and operate output states.
- ***RESET DELAY*** setting — This setting is used to set a time-delay-on-dropout, or off-delay, for the duration between the operate output state and the return to logic 0 after the input transits outside the defined pickup range.
- ***BLOCK*** setting — The default output operand state of all comparators is a logic 0 or *'flag not set'*. The comparator remains in this default state until a logic 1 is asserted at the RUN input, allowing the test to be performed. If the RUN input changes to logic 0 at any time, the comparator returns to the default state. The

RUN input is used to supervise the comparator. The BLOCK input is used as one of the inputs to RUN control.

- ***TARGET*** setting — This setting is used to define the operation of an element target message. When set to `Disabled`, no target message or illumination of a front panel LED indicator is issued upon operation of the element. When set to `Self-Reset`, the target message and LED indication follow the operate state of the element and self-resets once the operate element condition clears. When set to `Latched`, the target message and LED indication remains visible after the element output returns to logic 0 until a ***RESET*** command is received by the relay.
- ***EVENTS*** setting — This setting is used to control whether the pickup, dropout, or operate states are recorded by the event recorder. When set to `Disabled`, element pickup, dropout, or operate are not recorded as events. When set to `Enabled`, events are created for:
  - <Element> PKP (pickup)
  - <Element> DPO (dropout)
  - <Element> OP (operate)

The DPO event is created when the measure and decide comparator output transits from the pickup state (logic 1) to the dropout state (logic 0). This can happen when the element is in the operate state if the reset delay time is not zero.

Not every operand of a given element in a UR relay generates events, only the major output operands. Elements, asserting output per phase, log operating phase output only, without asserting the common three-phase operand event.

9.2.2 BASE QUANTITIES

Some settings are specified in per-unit (pu) calculated quantities, where *pu quantity = (actual quantity) / (base quantity)*

Where the current source is from a single current transformer (CT), the base quantity is the *nominal* secondary or primary current of the CT. Use the secondary current base to convert pu settings to/from a secondary current value, and use the primary current base to convert pu settings to/from a primary current value.

Where the current source is the sum of two or more CTs with different nominal primary currents, the primary base quantity is the largest nominal primary current.

For example, if *CT1 = 300 / 5 A* and *CT2 = 100 / 1 A*, then the base quantity is 300 A primary, 5 A secondary per CT. The CT2 current is scaled to the CT1 base quantity. If 5A is injected into the CT1 secondary and 1A is injected into the 1A CT2 secondary windings, with both currents in-phase, the sum of CT1 and CT2 is measured as

$$[5A+1A*(100/1)/(300/5)]*300/5=400.00A \text{ primary or } 400.00A/300A=1.333pu$$

Where the current source is the sum of two or more CTs with same nominal primary current but different secondary current, the first bank in the summation defines the secondary current base (for example in the F1+M1 sum, the F1 secondary nominal value defines the base).

For voltage elements in delta-connected VTs, the primary base quantity is the nominal phase-to-phase primary voltage of the protected system provided that the following two conditions are satisfied:

- The VT ratio setting is set to the nominal ratio of the VTs
- The secondary voltage setting is set to the phase-to-phase voltage seen by the relay

For example, on a system with a 13.8 kV nominal primary voltage, the base quantity is 13800 V. With 14400:120 V delta-connected VTs, the secondary base quantity and secondary voltage setting is:

$$(13800/14400) \text{ x } 120 = 115V$$

For wye-connected VTs, the primary and secondary base quantities are the phase-to-ground primary voltage of the protected system, provided that the VT ratio setting is set to the nominal ratio of the VTs and the secondary voltage setting PHASE VT x SECONDARY is set to the phase-to-ground voltage seen by the relay when the voltage of the protected system in nominal. For the same system with a 13.8 kV nominal primary voltage and same VTs as above, the secondary voltage setting (here a phase-to-ground value) is:

$$(13800/14400) \times (120/\sqrt{3}) = 66.4V$$

9.2.3 INTRODUCTION TO AC SOURCES

A mechanism called a Source creates a group of CT and VT input channels to be used by one or more protection and control elements. Sources, in the context of UR series relays, refer to the logical grouping of current and voltage signals such that one source contains all the signals required to measure the load or fault in a particular power system. A given source can contain some, or all, of the following signals:

- Three-phase currents
- Single-phase ground current
- Three-phase voltages
- An auxiliary voltage from a single VT for checking for synchronism.

For example, a line protection system having distance protection, phase and ground overcurrent protection supervised by a directional element, and breaker failure protection, can use a single source (SRC 1) shown in the table below. For some functions, two sources are needed. For example, for the synchrocheck function, voltage across the breaker needs to be measured, therefore both SRC1 with a phase voltage and source SRC 2 with an auxiliary voltage are needed.

Two AC sources are provided for each DSP module in UR relays. In relays with two DSP modules, four AC sources are provided. In relays with three DSP modules, six AC sources are provided.

Parameter	Source 1	Source 2
Name	SRC 1	SRC 2
Phase CT	F1	None
Ground CT	F1	None
Phase VT	F5	None
Aux VT	None	F5

Another important feature of the UR source is the ability to sum currents internally. In conventional analog or electronic relays, the sum of the currents is obtained from an external electrical connection of all CTs, through which any portion of the current for the element being protected can flow. In this case, auxiliary interposing CTs are needed to perform ratio matching, if the ratios of the primary CTs to be summed are not identical. In the UR series of relays, all the current signals are input to the UR device individually, where grouping, ratio correction, and summation are calculated internally with the help of configuration settings.

A major advantage of using internal summation is that the individual currents are still available to the protection device along with a summed current. For example, in a breaker-and-a-half configuration, CT current summed from both breakers is used for the line distance and overcurrent protection, while still being available as individual currents, for breaker failure protection for both breakers.

The internal grouping of current and voltage signals forms an AC source. This source can be given a specific name through the settings and becomes available to protection and metering elements. Individual names can be given to each source to help identify them for later use.

Once the sources have been configured, you have them available as selections for the choice of input signal for the protection elements and as metered quantities.

9.2.4 CT/VT CONFIGURATION

Current transformer (CT) and voltage transformer (VT) input channels are contained in CT/VT modules. The type of input channel can be phase/neutral/other voltage, phase/ground current, or sensitive ground current. The CT/VT modules calculate total waveform RMS levels, fundamental frequency phasors, symmetrical components, and harmonics for voltage or current, as allowed by the hardware in each channel. These modules can calculate other parameters as directed by the CPU module.

A CT/VT module contains up to eight input channels, numbered 1 through 8. The channel numbering corresponds to the module terminal numbering 1 through 8 and is arranged as follows. Channels 1, 2, 3, and 4 are always provided as a group, hereafter called a “bank,” and all four are either current or voltage, as are channels 5, 6, 7, and 8. Channels 1, 2, 3 and 5, 6, 7 are arranged as phase A, B, and C respectively. Channels 4 and 8 are either another current or voltage.

Banks are ordered sequentially from the block of lower-numbered channels to the block of higher-numbered channels, and from the CT/VT module with the lowest slot position letter to the module with the highest slot position letter, as follows.

Increasing slot position >		
CT/VT module 1	**CT/VT module 2**	**CT/VT module 3**
<bank 1>	<bank 3>	<bank 5>
<bank 2>	<bank 4>	<bank 6>

The UR platform allows for a maximum of six sets of three-phase voltages and six sets of three-phase currents. The result of these restrictions leads to the maximum number of CT/VT modules in a chassis to three. The maximum number of sources is six. A summary of CT/VT module configurations is as follows.

Item	Maximum number
CT/VT Module	2
CT Bank (3 phase channels, 1 ground channel)	2
VT Bank (3 phase channels, 1 auxiliary channel)	2

Upon relay startup, configuration settings for every bank of current or voltage input channels are generated automatically from the order code. Within each bank, a channel identification label is assigned automatically to each bank of channels in a given product. The bank naming convention is based on the physical location of the channels. Bank identification consists of the letter designation of the slot in which the CT/VT module is mounted as the first character, followed by numbers indicating the channel, either 1 or 5.

For three-phase channel sets, the number of the lowest numbered channel identifies the set. For example, F1 represents the three-phase channel set of F1/F2/F3, where F is the slot letter and 1 is the first channel of the three channels.

Upon startup, the CPU configures the settings required to characterize the current and voltage inputs. It displays them in the appropriate section in the sequence of the banks as follows for a maximum configuration: F1, F5, L1, L5, S1, and S5.

9.3 SETTINGS MENU

In this manual, the settings are described with the help of pictorial representations as shown below. The boxes with borders represent the LCD display on the relay and the text within the boxes show what is displayed on the LCD screen. The horizontal positions depict how you move between the settings using the horizontal cursor keys and the vertical positions depict how you move between the settings using the vertical cursor keys. The small black boxes on the left within each cell show that there are sub-menus. The cells with four black boxes on the left show that it is as the highest menu level while the cells with two black boxes show that it is a sub-menu, which parents further settings.

■ ■ SETTINGS ■ ■ PRODUCT SETUP	⇔	■ SECURITY ■
⇩	⇩	■ DISPLAY ■ PROPERTIES
	⇩	■ CLEAR RELAY ■ RECORDS
	⇩	■ COMMUNICATIONS ■
	⇩	■ MODBUS USER MAP ■
	⇩	■ REAL TIME ■ CLOCK
	⇩	■ FAULT REPORTS ■
	⇩	■ OSCILLOGRAPHY ■
	⇩	■ DATA LOGGER ■
	⇩	■ DEMAND ■
	⇩	■ USER-PROGRAMMABLE ■ LEDS
	⇩	■ USER-PROGRAMMABLE ■ SELF TESTS
	⇩	■ CONTROL ■ PUSHBUTTONS
	⇩	■ USER-PROGRAMMABLE ■ PUSHBUTTONS
	⇩	■ FLEX STATE ■ PARAMETERS
	⇩	■ USER-DEFINABLE ■ DISPLAYS
	⇩	■ DIRECT I/O ■
	⇩	■ TELEPROTECTION ■
⇧	⇧	■ INSTALLATION ■

■ ■ REMOTE RESOURCES ■ ■	⇔	■ ■	Access in Enervista only
■ ■ SETTINGS ■ ■ SYSTEM SETUP	⇔	■ AC INPUTS ■	
⇩	⇩	■ POWER SYSTEM ■	
	⇩	■ SIGNAL SOURCES ■	
	⇩	■ BREAKERS ■	
	⇩	■ SWITCHES ■	
	⇩	■ FLEXCURVES ■	
⇧	⇧	■ PHASOR MEASUREMENT ■ UNIT	
■ ■ PROCESS BUS ■ ■ MODULE	⇔	■ GENERAL ■	
⇧	⇧	■ SV STREAM CONFIG ■	
■ ■ SETTINGS ■ ■ FLEXLOGIC	⇔	■ FLEXLOGIC ■ EQUATION EDITOR	
⇩	⇩	■ FLEXLOGIC ■ TIMERS	
	⇩	■ FLEXELEMENTS ■	
⇧	⇧	■ NON-VOLATILE ■ LATCHES	
■ ■ SETTINGS ■ ■ GROUPED ELEMENTS	⇔	■ SETTING GROUP 1 ■	
⇩	⇩	■ SETTING GROUP 2 ■	
	⇩	■ SETTING GROUP 3 ■	
	⇩	■ SETTING GROUP 4 ■	
	⇩	■ SETTING GROUP 5 ■	
⇧	⇧	■ SETTING GROUP 6 ■	
■ ■ SETTINGS ■ ■ CONTROL ELEMENTS	⇔	■ TRIP BUS ■	
⇩	⇩	■ SETTING GROUPS ■	
	⇩	■ SELECTOR SWITCH ■	

	⇕	■ TRIP OUTPUT ■
	⇕	■ UNDERFREQUENCY ■
	⇕	■ OVERFREQUENCY ■
	⇕	■ FREQUENCY RATE ■ OF CHANGE
	⇕	■ SYNCHROCHECK ■
	⇕	■ DIGITAL ELEMENTS ■
	⇕	■ DIGITAL COUNTERS ■
	⇕	■ MONITORING ELEMENTS ■
	⇕	■ PILOT SCHEMES ■
	⇕	■ AUTORECLOSE ■
⇧	⇧	■ MULTI-RANGE SIGNAL ■ OSCILL DETECTOR
■ ■ SETTINGS ■ ■ INPUTS / OUTPUTS	⇔	■ CONTACT INPUTS ■
⇩	⇕	■ VIRTUAL INPUTS ■
	⇕	■ CONTACT OUTPUTS ■
	⇕	■ VIRTUAL OUTPUTS ■
	⇕	■ RESETTING ■
	⇕	■ DIRECT INPUTS ■
	⇕	■ DIRECT OUTPUTS ■
⇧	⇧	■ TELEPROTECTION ■
■ ■ SETTINGS ■ ■ TRANSDUCER I/O	⇔	■ DCMA INPUTS ■
⇩	⇕	■ RTD INPUTS ■
⇧	⇧	■ DCMA OUTPUTS ■
■ ■ SETTINGS ■ ■ TESTING	⇔	■ IED MODE CONFIG ■
⇩	⇕	■ FORCE CONTACT ■ INPUTS

■ ■ SETTINGS
■ ■ SIMULATION

⇕

■ FORCE CONTACT
■ OUTPUTS

⇕

■ PMU
■ TEST VALUES

⇧

■ SUBSCRIBE TO
■ SIMULATED VALUES

⇔

■ PUBLISH
■ SIMULATED VALUES

9.4 PRODUCT SETUP

The PRODUCT SETUP menus is where you set up the basic configuration of the relay.

9.4.1 SECURITY

The UR relay provides a large array of security features and options. These are fully described in the Cybersecurity chapter and will not be repeated here.

9.4.2 DISPLAY PROPERTIES

Setting path: ***SETTINGS > PRODUCT SETUP > DISPLAY PROPERTIES***

■ DISPLAY ■ PROPERTIES	⇔	LANGUAGE: English	Range: Language depending on order code) Visible when language other than English is purchased.
	⇕	FLASH MESSAGE TIME: 1.0 s	Range: 0.5 to 10.0 s in steps of 0.1
	⇕	DEFAULT MESSAGE TIMEOUT: 300 s	Range: 10 to 900 s in steps of 1
	⇕	DEFAULT MESSAGE INTENSITY: 25 %	Range: 25%, 50%, 75%, 100% Visible when a VFD is installed
	⇕	SCREEN SAVER FEATURE: Disabled	Range: Disabled, Enabled Visible when an LCD is installed
	⇕	SCREEN SAVER WAIT TIME: 30 min	Range: 1 to 65535 min. in steps of 1 Visible when an LCD is installed
	⇕	CURRENT CUT-OFF LEVEL: 0.020 pu	Range: 0.002 to 0.020 pu in steps of 0.001
	⇑	VOLTAGE CUT-OFF LEVEL: 1.0 V	Range: 0.1 to 2.0 V secondary in steps of 0.1

The ***DISPLAY PROPERTIES*** sub-menu has the following settings.

LANGUAGE

This setting selects the language used to display settings, actual values, and targets. This setting displays when a language other than English was purchased, and the range depends on the order code of the relay. For Japanese, the settings display in Japanese on the graphical front panel, while the keys printed on the panel are in English.

For Japanese and Chinese, up to 10 characters can be input in a field on the graphical front panel, not the usual 20. If you have a graphical front panel, you can change the language regardless of the language purchased. If you select a language with which you are unfamiliar and want to switch back to English for example, the menu order remains the same.

If you change the language after entering user-configured names, such as relay names, the strings are not translated. For example, a relay name is entered in English, the language is changed to Japanese, and the relay name remains in English. For this reason it is important to set the language before changing the settings.

You can also select the language in EnerVista under **Maintenance > Change Front Panel**. The language of the EnerVista software can be changed under **View > Language**. Only languages supported by the operating system can be displayed. For example, for Polish or Japanese, the software needs to be installed on a Polish or Japanese operating system.

> *Note:*
> *Restart the relay after changing the LANGUAGE setting*

FLASH MESSAGE TIME

Flash messages are status, warning, error, and information messages displayed in response to certain key presses during settings programming. These messages override any normal messages. Use this setting to change the duration of flash messages on the display.

DEFAULT MESSAGE TIMEOUT

If the keypad is inactive for a period of time, the relay automatically reverts to a default message. The inactivity time is modified using this setting to ensure that messages remain on the screen long enough during programming or reading of actual values. This setting is not supported on the graphical front panel.

DEFAULT MESSAGE INTENSITY

The brightness can be attenuated during default message display. During keypad interrogation, the display always operates at full brightness. This setting is not supported on the graphical front panel.

SCREEN SAVER FEATURE and SCREEN SAVER WAIT TIME

These settings control the back-lighting for relays with an LCD. When ***SCREEN SAVER FEATURE*** is enabled, the LCD back-lighting turns off after the ***DEFAULT MESSAGE TIMEOUT*** followed by the ***SCREEN SAVER WAIT TIME***, provided that no keys have been pressed and no target messages are active. When a key press occurs or a target becomes active, the LCD back-lighting turns on. These settings are not supported on the graphical front panel.

CURRENT CUT-OFF LEVEL

This setting modifies the current cut-off threshold. Very low currents (1 to 2% of the rated value) are very susceptible to noise. Some customers prefer very low currents to display as zero, while others prefer the current to display even when the value reflects noise rather than the actual signal. The relay applies a cut-off value to the magnitudes and angles of the measured currents. If the magnitude is below the cut-off level, it is substituted with zero. This applies to phase and ground current phasors as well as true RMS values and symmetrical components. The cut-off operation applies to quantities used for metering, protection, and control, as well as those used by communications protocols. Note that the cut-off level for the sensitive ground input is 10 times lower than the ***CURRENT CUT-OFF LEVEL*** setting value. Raw current samples available via oscillography are not subject to cut-off. This setting does not affect the 87L metering cutoff, which is constantly at 0.02 pu.

VOLTAGE CUT-OFF LEVEL

This setting modifies the voltage cut-off threshold. Very low secondary voltage measurements (at the fractional volt level) can be affected by noise. Some customers prefer these low voltages to be displayed as zero, while others prefer the voltage to be displayed even when the value reflects noise rather than the actual signal. The relay applies a cut-off value to the magnitudes and angles of the measured voltages. If the magnitude is below the cut-off level, it is substituted with zero. This operation applies to phase and auxiliary voltages, and symmetrical components. The cut-off operation applies to quantities used for metering, protection, and control, as well as those used by communications protocols. Raw samples of the voltages available via oscillography are not subject to cut-off.

Considerations:

> *Note:*
> *The Current and Voltage Cut-off levels not only affect the display values, they also affect the actual values used by the protection and the control elements. Thus, the settings CURRENT CUT-OFF LEVEL and VOLTAGE CUT-OFF LEVEL should not be changed while relay is in service*

The ***CURRENT CUT-OFF LEVEL*** and the ***VOLTAGE CUT-OFF LEVEL*** are used to determine the metered power cut-off levels. The power cut-off level is calculated using the following equations.

For Delta connections:

3-phase power cut-off = (√3 x CURRENT CUT-OFF LEVEL x VOLTAGE CUT-OFF LEVEL x VT primary x CT primary) / VT secondary

For Wye connections:

3-phase power cut-off = (3 x CURRENT CUT-OFF LEVEL x VOLTAGE CUT-OFF LEVEL x VT primary x CT primary) / VT secondary

Per-phase power cut-off = (CURRENT CUT-OFF LEVEL x VOLTAGE CUT-OFF LEVEL x VT primary x CT primary) / VT secondary

where

VT primary = VT secondary × VT ratio and CT primary = CT secondary × CT ratio.

For example, given the following settings:

- ***CURRENT CUT-OFF LEVEL:*** `0.02 pu`
- ***VOLTAGE CUT-OFF LEVEL:*** `1.0 V`
- ***PHASE CT PRIMARY:*** `100 A`
- ***PHASE VT SECONDARY:*** `66.4 V`
- ***PHASE VT RATIO:*** `208.00 : 1`
- ***PHASE VT CONNECTION:*** `Delta`

We have:

CT primary = 100 A

VT primary = PHASE VT SECONDARY x PHASE VT RATIO = 66.4 V x 208 = 13811.2 V

The power cut-off is therefore:

Power cut-off = (CURRENT CUT-OFF LEVEL × VOLTAGE CUT-OFF LEVEL × CT primary × VT primary)/VT secondary, therefore

Power cut-off = (√3 × 0.02 pu × 1.0 V × 100 A × 13811.2 V) / 66.4 V = 720.5 watts

Any calculated power value below this cut-off does not display. As well, the three-phase energy data do not accumulate if the total power from all three phases does not exceed the power cut-off.

> *Note:*
> *Lower the **VOLTAGE CUT-OFF LEVEL** and **CURRENT CUT-OFF LEVEL** with care as the relay accepts lower signals as valid measurements. Unless dictated otherwise by a specific application, we recommend default settings of `0.02 pu` for **CURRENT CUT-OFF LEVEL** and `1.0 V` for **VOLTAGE CUT-OFF LEVEL.***

9.4.3 CLEAR RELAY RECORDS

Setting path: ***SETTINGS > PRODUCT SETUP > CLEAR RELAY RECORDS***

■ CLEAR ■ RELAY RECORDS	⇔	CLEAR FAULT REPORTS: Off	Range: FlexLogic operand
	⇕	CLEAR EVENT RECORDS: Off	Range: FlexLogic operand
	⇕	CLEAR OSCILLOGRAPHY: Off	Range: FlexLogic operand

⇕	CLEAR DATA LOGGER: Off	Range: FlexLogic operand
⇕	CLEAR ARC AMPS <n>: Off	Range: FlexLogic operand (for Arc Amps 1 to 4)
⇕	CLEAR DEMAND: Off	Range: FlexLogic operand
⇕	CLEAR ENERGY: Off	Range: FlexLogic operand
⇕	RESET UNAUTH ACCESS: Off	Range: FlexLogic operand
⇧	CLEAR DIR I/O STATS: Off	Range: FlexLogic operand Visible only for units with Direct I/O module

RESET UNAUTH ACCESS

This setting Resets the access restriction counter. Selected records can be cleared from user-programmable conditions with FlexLogic operands. Assigning user-programmable pushbuttons to clear specific rcords is a typical application for these commands. Since the relay responds to rising edges of the configured FlexLogic operands, they must be asserted for at least 50 ms to take effect.

Clearing records with user-programmable operands is not protected by the command password. However, user-programmable pushbuttons are protected by the command password. Thus, if they are used to clear records, the user- programmable pushbuttons can provide extra security if required.

For example, to assign user-programmable pushbutton 1 to clear demand records, apply the following settings:

1. Assign the clear demand function to pushbutton 1 by making the following change in the SETTINGS > PRODUCT SETUP > CLEAR RELAY RECORDS menu.

   CLEAR DEMAND: PUSHBUTTON 1 ON

2. Set the properties for user-programmable pushbutton 1 by making the following changes in the SETTINGS > PRODUCT > SETUP > US -PROGRAMMABLE PUSHBUTTONS > USER PUSHBUTTON 1 menu:

   PUSHBUTTON 1 FUNCTION: `Self-reset`

   PUSHBTN 1 DROP-OUT TIME: `0.20 s`

9.4.4 COMMUNICATIONS

The UR relay provides a large array of communication features and options. All theory and general information relating to communications can be found in the Communications Guide. This setting contains information about the front panel and Enervista settings only.

All IEC61850 information including the settings has been moved into the Communications Guide.

9.4.4.1 COMMUNICATIONS SETTINGS MENU

Setting path: ***SETTINGS > PRODUCT SETUP > COMMUNICATIONS***

> *Note:*
> *Not all settings are used for all models*

■ COMMUNICATIONS ■	⇔	■ SERIAL PORTS ■

⇕	■ NETWORK ■
⇕	■ IPv4 ROUTE TABLE ■
⇕	■ MODBUS PROTOCOL ■
⇕	■ PROTOCOL ■
⇕	■ DNP PROTOCOL ■
⇕	■ DNP / IEC104 ■ POINT LISTS
⇕	■ IEC 61850 PROTOCOL ■
⇕	■ LEGACY FIXED GOOSE ■
⇕	■ WEB SERVER ■ HTTP PROTOCOL
⇕	■ TFTP PROTOCOL ■
⇕	■ IEC 60870-5-104 ■ PROTOCOL
⇕	■ EGD PROTOCOL ■
⇕	■ IEC103 ■ PROTOCOL
⇧	■ USB 2.0 PORT ■

The sub-menus are described in the following sections.

9.4.4.2 SERIAL PORTS

This section does not describe the principles of serial communication. It only describes the required settings. For further details on serial communication, refer to the Installation and Maintenance chapters of this manual and the separate Communications Guide.

Setting path: ***SETTINGS > PRODUCT SETUP > COMMUNICATIONS > SERIAL PORTS***

■ SERIAL PORTS ■	⇔	RS485 COM2 PORT FUNCTION: Enabled	Range: Disabled, Enabled
	⇕	RS485 COM2 BAUD RATE: 19200	Range: 300, 1200, 2400, 4800, 9600, 14400, 19200, 28800, 33600, 38400, 57600, 115200 bit/s
	⇕	RS485 COM2 PARITY: Even	Range: None, Odd, Even
	⇕	RS485 COM2 RESPONSE MIN TIME: 0 ms	Range: 0 to 1000 ms in steps of 10
	⇕	RS232 PORT FUNCTION: Enabled	Range: Disabled, Enabled

⇧	RS232 BAUD RATE: 115200 ms	Range: 19200, 115200

RS485 PORT FUNCTION

This setting enables and disables the RS485 COM2 serial port on the rear panel. When the port function is disabled, SCADA (Modbus or IEC103 communications) and other comms on the rear RS485 port are not permitted.

RS485 COM2 BAUD RATE

This setting sets the COM2 Baud rate. It is important that this parameter agrees with the setting used on the computer or other equipment that is connected to the port. If IEC 60870-103 is chosen as the protocol, valid baud rates are 9600 and 19200 bps.

RS485 COM2 PARITY

This setting sets the COM2 parity. It is important that this parameter agrees with the setting used on the computer or other equipment that is connected to the port. If IEC 60870-103 is chosen as the protocol, valid parity is Even.

RS485 COM2 RESPONSE MIN TIME

This setting specifies the minimum time before the rear RS485 port transmits after receiving data from a host. This feature allows operation with hosts that hold the RS485 transmitter active for some time after each transmission.

RS232 PORT FUNCTION

This setting enables and disables the RS232 serial port on the front panel. When the port function is enabled, a standard RS232 serial cable allows a computer running the EnerVista UR Setup software to retrieve, display, and write settings either individually or collectively, to display status and actual values, to initiate controls, and to retrieve and display event records, oscillography records, data logger records, and disturbance records. This setting is applicable to both enhanced and basic front panels.

RS485 COM2 BAUD RATE

This setting sets the COM2 Baud rate. It is important that this parameter agrees with the setting used on the computer or other equipment that is connected to the port. If IEC 60870-103 is chosen as the protocol, valid baud rates are 9600 and 19200 bps.

9.4.4.3 NETWORK

This section does not describe the principles of Ethernet networking topology. It only describes the required settings. For further details on Ethernet networking, refer to the Installation and Maintenance chapters of this manual and the separate Communications Guide.

Setting path: ***SETTINGS > PRODUCT SETUP > COMMUNICATIONS > NETWORK***

■ NETWORK PORT 1 ■	⇔	PRT1 IP ADDRESS: 127.0.0.1	Range: standard IPV4 address format
	⇩	PRT1 SUBNET IP MASK: 255.0.0.0	Range: standard IPV4 address format
	⇧	PRT1 FUNCTION: Enabled	Range: Enabled, Disabled
■ NETWORK PORT 2 ■	⇔	PRT2 IP ADDRESS: 127.0.0.1	Range: standard IPV4 address format
	⇩	PRT2 SUBNET IP MASK: 255.0.0.0	Range: standard IPV4 address format

⇕	PRT2 REDUNDANCY: None	Range: None, Failover, PRP Range if no PRP license: None, Failover
⇕	PRP MCST ADDR: 01154E000100	Range: 01-15-4E-00-01-00 to 01-15-4E-00-01-FF
⇧	PRT2 FUNCTION: Enabled	Range: Enabled, Disabled

■ NETWORK PORT 3 ■	⇔	PRT3 IP ADDRESS: 127.0.0.1	Range: standard IPV4 address format
	⇕	PRT3 SUBNET IP MASK: 255.0.0.0	Range: standard IPV4 address format
	⇧	PRT3 FUNCTION: Enabled	Range: Enabled, Disabled

The ***NETWORK*** menu is used to set the Ethernet network parameters. When using more than one Ethernet port, configure each to belong to a different network or subnet using the IP addresses and mask. Configure the network IP and subnet settings before configuring the routing settings.

> *Note:*
> *To obtain a list of all port numbers used, for example for audit purposes, contact GE technical support with substantiating information, such as the serial number and order code of your device.*

The IP addresses are used with the DNP, Modbus/TCP, IEC 61580, IEC 60870-5-104, TFTP, HTTP, and PRP protocols.

You must use the front panel to change these settings. You can only use EnerVista software to enable or disable the ports. In the Offline Window area, all settings can be changed except port 2 redundancy (depending on firmware version).

When using GOOSE, in failover or PRP mode, port 3 configuration in the CID file is ignored. The Port 3 ConnectedAP elements has no meaning, as ports 2 and 3 use the port 2 MAC address, IP address, and mask.

PRT1 (2 or 3) IP ADDRESS

This setting sets the port's IPv4 address in standard IPV4 format. This setting is valid on port 3 if ***PRT2 REDUNDANCY*** is set to `None`.

PRT1 (2 or 3) SUBNET MASK

This setting sets the port's IPv4 subnet mask in standard IPV4 format. This setting is valid on port 3 if ***PRT2 REDUNDANCY*** is set to `None`.

PRT1 (2 or 3) FUNCTION

This setting enable/disables network communication on the respective port. When the port function is disabled, the network traffic on this port is disabled. The ***PRT2 REDUNDANCY*** setting has no effect on this functionality. The change takes effect after restarting the relay.

> *Note:*
> *If you disable a port, which is used to communicate between the relay and the software, you will break all communication between the two. If you do this, you must re-enable the port and check the IP and gateway addresses. You must also set the relay to* `Programmed`.

PRT2 REDUNDANCY

This setting determines whether ports 2 and 3 will operate in redundant or independent mode. If your product includes PRP, the available options will include `PRP` in addition to `None` and `Failover`. In non-redundant mode, ports 2 and 3 operate independently with their own MAC, IP, and mask addresses. If ***REDUNDANCY*** is set to Failover, the operation of ports 2 and 3 is as follows:

- Ports 2 and 3 use the port 2 MAC address, IP address, and mask
- The configuration fields for IP address and mask on port 3 are hidden
- Port 3 is in standby mode and does not actively communicate on the Ethernet network but monitors its link to the Multilink switch. If port 2 detects a problem with the link, communications is switched to Port 3. Port 3 is, in effect, acting as a redundant or backup link to the network for port 2. Once port 2 detects that the link between itself and the switch is good and that communication is healthy for five minutes, then switching back to port 2 is performed. The delay in switching back ensures that rebooted switching devices connected to the relay, which signal their ports as active prior to being completely functional, have time to completely initialize themselves and become active. Once port 2 is active again, port 3 returns to standby mode.

If ***REDUNDANCY*** is set to PRP, the operation of ports 2 and 3 is as follows:

- Ports 2 and 3 use the port 2 MAC address, IP address, and mask
- The configuration fields for IP address and mask on port 3 are overwritten with those from port 2. This is visible on the front panel but not displayed in the EnerVista software.
- ***PRT 2 MCST ADDRESS*** field is visible
- The port 2 PTP function still uses only port 2 and the port 3 PTP function still uses only port 3. The relay still synchronizes to whichever port has the best master. When ports 2 and 3 see the same master, as is typically the case for PRP networks, the port with the better connectivity is used.

Behavior for GOOSE messages is as follows:

- If ***REDUNDANCY*** is set to `Failover` or `PRP`, in order to transmit a GOOSE message on port 2, the CID file must be configured to have the corresponding GSE element in both ConnectedAPs S2 and S3. In the EnerVista software, the **TxGOOSE CPU PORT ASSIGNMENT** needs to be `Ports-1,2,3` to transmit GOOSE on both ports 1 and 2, or `Ports-2,3` to have GOOSE only on port 2, with failover/PRP.
- If ***REDUNDANCY*** is set to `PRP`, the port 2 configured GOOSE message is simultaneously transmitted on ports 2 and 3.
- If ***REDUNDANCY*** is set to `Failover` and the port 2 link fails, then only the port 2 configured GOOSE message is transmitted on port 3.

> *Note:*
> *The two ports must be connected to completely independent LANs with no single point of failure, such as common power supplies that feed switches on both LANs.*

> *Note:*
> *When **REDUNDANCY** is set to `PRP` or `Failover` and the network path with resolved default gateway is broken, then the ARP table needs approximately five seconds to rebuild. The layer 2 protocols (GOOSE and PTP) are not affected. However, the TCP/IP or UDP protocols (MMS connections, DNP3.0, and so on) may require reconnection if their active connection does not ride through re-transmission frames.*

For any changes to this setting to take effect, restart the unit.

PRT2 PRP MCST ADDR

This setting allows you to change the multicast address used by the PRP supervision frames. This setting is available if ***REDUNDANCY*** is set to `PRP`. All devices in the same PRP network must have the same multicast address. Choose an address that does not conflict with another multicast protocol.

9.4.4.4 IPV4 ROUTE TABLE

Setting path: ***SETTINGS > PRODUCT SETUP > COMMUNICATIONS > IPv4 ROUTE TABLE 1***

You can configure up to 6 static routes and one default route. The following description shows just the first of the six static routes.

■ IPv4 ROUTE TABLE ■	⇔	■ DEFAULT IPv4 ROUTE ■
	⇕	■ IPv4 NETWORK ■ ROUTE 1

In the ***DEFAULT IPv4 ROUTE*** menu, you specify the gateway address using the GATEWAY ADDRESS setting.

■ DEFAULT IPv4 ROUTE ■	⇔	GATEWAY ADDRESS: 127.0.0.1	Range: standard IPV4 unicast address format

In the ***IPv4 NETWORK*** menu, you set the individual static routes by specifying the destination address and the subnet mask as follows:

■ IPv4 NETWORK ■ ROUTE 1	⇔	RT1 DESTINATION: 127.0.0.1	Range: standard IPV4 unicast address format
	⇕	RT1 NET MASK: 255.0.0.0	Range: standard IPV4 unicast address format
	⇧	RT1 GATEWAY: 127.0.0.1	Range: standard IPV4 unicast address format

Note:
Configure the network IP and subnet settings before configuring the routing settings

9.4.4.5 MODBUS PROTOCOL

Setting path: ***SETTINGS > PRODUCT SETUP > COMMUNICATIONS > MODBUS PROTOCOL***

■ MODBUS PROTOCOL ■	⇔	MODBUS SLAVE ADDRESS: 254	Range: 1 to 254 in steps of 1
	⇧	MODBUS TCP PORT NUMBER(502): 502	Range: 0 to 65535 in steps of 1

The serial communication ports utilize the Modbus protocol, unless the port is configured for DNP or IEC 60870-5-103 operation. This allows the EnerVista UR Setup software to be used on the port. UR devices operate as Modbus slave devices only. For more information on the protocol, including the memory map table, see the UR Family Communications Guide.

MODBUS SLAVE ADDRESS

When using the Modbus protocol on the RS232 port, the relay responds regardless of the ***MODBUS SLAVE ADDRESS*** programmed. For the RS485 port, each device on the serial bus must have a unique slave address from 1 to 254. Address 0 and addresses from 248 and up are reserved by the Modbus protocol specification, and so we do not recommend their use here. Address 0 is the broadcast address to which all Modbus slave devices listen. Addresses do not have to be sequential, but no two devices can have the same address or conflicts resulting in errors will occur. Generally, starting at 1, set each device added to the link to use the next higher address. When

using Modbus TCP/IP, the client must use the programmed ***MODBUS SLAVE ADDRESS*** value in the Unit Identifier field.

MODBUS TCP PORT NUMBER

You can also use Modbus over TCP/IP on any of the Ethernet ports. The listening TCP port 502 is reserved for Modbus communications, and only in exceptional cases when ***MODBUS TCP PORT NUMBER*** is set to any other port. A ***MODBUS TCP PORT NUMBER*** of `0` disables Modbus over TCP/IP, meaning closes the Modbus TCP port. When the port number is changed to 0, the change takes effect when the relay is restarted. When it is set to 0, use the front panel or serial port to communicate with the relay.

> *Note:*
> *Do not set more than one protocol to the same TCP/UDP port number, as this results in unreliable operation of those protocols.*

9.4.4.6 PROTOCOLS & AUTHORITY

Setting path: ***SETTINGS > PRODUCT SETUP > COMMUNICATIONS > PROTOCOL& AUTHORITY***

■ PROTOCOL & ■ AUTHORITY	⇔	PROTOCOL: DNP 3.0	Range: DNP 3.0, IEC 60870-5-104, IEC 60870-5-103
	⇕	IEC61850 Edition Edition 2	Range: Edition 1, Edition 2
	⇕	SFTP PROTOCL: Enabled	Range: Disabled, Enabled
	⇕	MMS PORT FUNCTION: Enabled	Range: Disabled, Enabled
	⇕	CID FILE WRITE VIA MMS: Enabled	Range: Disabled, Enabled
	⇕	SETTING WRITE VIA MMS: Disabled	Range: Disabled, Enabled
Control authority			
	⇕	MULTILEVEL CONTROL: Enabled	Range: Disabled, Enabled
	⇧	IED LOCAL STATUS: Off	Range: FlexLogic operand

PROTOCOL

This setting selects the SCADA protocol on which the unit communicates, either DNP3.0, IEC 60870-104 or IEC 60870-103, with DNP being the default. Options depend on order code. For any change to take effect, restart the unit.

The following table shows the protocols that are operational on the RS232, RS485, and Ethernet ports. It shows all possible combinations of the protocol and DNP channel port settings.

Protocol	DNP CHANNEL 1(2) PORT	RS232	RS485	Ethernet
DNP	Channel 1: Eth TCP Channel 2: Eth TCP	Modbus	Modbus	DNP, Modbus, IEC 61850
DNP	Channel 1: Eth TCP Channel 2: none	Modbus	Modbus	DNP, Modbus, IEC 61850

Protocol	DNP CHANNEL 1(2) PORT	RS232	RS485	Ethernet
DNP	Channel 1: none Channel 2: Eth TCP	Modbus	Modbus	DNP, Modbus, IEC 61850
DNP	Channel 1: Eth UDP Channel 2: none	Modbus	Modbus	DNP, Modbus, IEC 61850
DNP	Channel 1: Eth TCP Channel 2: RS485	Modbus	DNP	DNP, Modbus, IEC 61850
DNP	Channel 1: Eth TCP Channel 2: RS232	DNP	Modbus	DNP, Modbus, IEC 61850
DNP	Channel 1: Eth UDP Channel 2: RS485	Modbus	DNP	DNP, Modbus, IEC 61850
DNP	Channel 1: Eth UDP Channel 2: RS232	DNP	Modbus	DNP, Modbus, IEC 61850
DNP	Channel 1: RS485 Channel 2: Eth TCP	Modbus	DNP	DNP, Modbus, IEC 61850
DNP	Channel 1: RS232 Channel 2: Eth TCPDNP	Modbus	DNP, Modbus, IEC 61850	DNP, Modbus, IEC 61850
DNP	Channel 1: RS485 Channel 2: RS232	DNP	DNP	Modbus, IEC 61850
DNP	Channel 1: RS232 Channel 2: RS485	DNP	DNP	Modbus, IEC 61850
DNP	Channel 1: RS485 Channel 2: none	Modbus	DNP	Modbus, IEC 61850
IEC 104		Modbus	Modbus	IEC 104, Modbus, IEC 61850
IEC 103		Modbus	IEC 103	Modbus, IEC 61850

SFTP

This setting enables or disables file transfers to/from the relay by Secure Shell (SSH) and Secure File Transfer Protocol (SFTP). This setting displays when using IEC 61850 without CyberSentry.

MMS PORT FUNCTION

This setting enables or disables MMS port 102. This setting does not, affect GOOSE operation.

CID FILE WRITE FROM MMS

This setting enables or disables CID file writes from the MMS client.

SETTING WRITE VIA MMS

When set to Enabled, ***Setting write*** from MMS client is enabled, otherwise S***etting write*** from MMS client is not allowed.

Note that upon this setting change, the latest setting will be reflected only in IID not the CID.

MULTILEVEL CONTROL

When enabled, control authority from multiple levels (Bay, Station and Remote) are allowed simultaneously based on Local/Remote status and status authority status. Otherwise only one level has the authority to control, based on Local/Remote status and status authority status.

Note:
***MULTILEVEL CONTROL** setting is only available for order codes with the IEC 61850 software option. It is only applicable to Breaker and Disconnect switch control related logical nodes (XCBR/XSWI and CSWI), which instantiates Loc and LocSta data objects. For all other controllable data objects in other logical nodes (like virtual inputs in GGIO2) **MULTILEVEL CONTROL** setting is not applicable.*

IED LOCAL STATUS

This selects an operand, that indicates the relay is in Local or Remote mode. When the operand value is set, the relay is in Local mode and any commands from remote protocols (IEC 61850) are rejected.

Note:
***IED LOCAL STATUS** setting is only available for order codes with the IEC 61850 software option. It is applicable for all IEC 61850 commands including Breaker and Disconnect switch controls, and the commands are allowed only when the FlexOperand assigned to IED **LOCAL STATUS** setting is at logic "0". When the FlexOperand assigned to IED Local Status is at logic "1", all the control actions from IEC 61850 client are blocked.*

9.4.4.7 DNP PROTOCOL

Setting path: ***SETTINGS > PRODUCT SETUP > COMMUNICATIONS > DNP PROTOCOL***

■ DNP PROTOCOL ■	⇔	■ DNP CHANNELS ■ DNP 3.0	
	⇕	DNP ADDRESS: 1	Range: 0 to 65535 in steps of 1
	⇕	■ DNP NETWORK ■ CLIENT ADDRESSES	
	⇕	DNP TCP/UDP PORT NUMBER(20000): 20000	Range: 0 to 65535 in steps of 1
	⇕	DNP UNSOL RESPONSE FUNCTION: Disabled	Range: Disabled, Enabled
	⇕	DNP UNSOL RESPONSE TIMEOUT: 5 s	Range: 0 to 60 s in steps of 1
	⇕	DNP UNSOL RESPONSE MAX RETRIES: 10	Range: 1 to 255 in steps of 1
	⇕	DNP UNSOL RESPONSE DEST ADDRESS: 1	Range: 0 to 65519 in steps of 1
	⇕	DNP CURRENT SCALE FACTOR: 1	Range: 0.001, 0.01. 0.1, 1, 10, 100, 1000, 10000, 100000, 1000000, 10000000, 100000000
	⇕	DNP VOLTAGE SCALE FACTOR: 1	Range: 0.001, 0.01. 0.1, 1, 10, 100, 1000, 10000, 100000, 1000000, 10000000, 100000000
	⇕	DNP POWER SCALE FACTOR: 1	Range: 0.001, 0.01. 0.1, 1, 10, 100, 1000, 10000, 100000, 1000000, 10000000, 100000000
	⇕	DNP ENERGY SCALE FACTOR: 1	Range: 0.001, 0.01. 0.1, 1, 10, 100, 1000, 10000, 100000, 1000000, 10000000, 100000000
	⇕	DNP PF SCALE FACTOR: 1	Range: 0.001, 0.01. 0.1, 1, 10, 100, 1000, 10000, 100000, 1000000, 10000000, 100000000
	⇕	DNP OTHER SCALE FACTOR: 1	Range: 0.001, 0.01. 0.1, 1, 10, 100, 1000, 10000, 100000, 1000000, 10000000, 100000000

⇕	DNP CURRENT DEFAULT DEADBAND: 30000	Range: 0 to 100000000 in steps of 1
⇕	DNP VOLTAGE DEFAULT DEADBAND: 30000	Range: 0 to 100000000 in steps of 1
⇕	DNP POWER DEFAULT DEADBAND: 30000	Range: 0 to 100000000 in steps of 1
⇕	DNP ENERGY DEFAULT DEADBAND: 30000	Range: 0 to 100000000 in steps of 1
⇕	DNP PF DEFAULT DEADBAND: 30000	Range: 0 to 100000000 in steps of 1
⇕	DNP OTHER DEFAULT DEADBAND: 30000	Range: 0 to 100000000 in steps of 1
⇕	DNP TIME SYNC IIN PERIOD: 1440 min	Range: 1 to 10080 min. in steps of 1
⇕	DNP MESSAGE FRAGMENT SIZE: 240	Range: 30 to 2048 in steps of 1
⇕	DNP OBJECT 1 DEFAULT VARIATION: 2	Range: 1, 2
⇕	DNP OBJECT 2 DEFAULT VARIATION: 2	Range: 1, 2, 3
⇕	DNP OBJECT 20 DEFAULT VARIATION: 1	Range: 1, 2, 5, 6
⇕	DNP OBJECT 21 DEFAULT VARIATION: 1	Range: 1, 2, 9, 10
⇕	DNP OBJECT 22 DEFAULT VARIATION: 1	Range: 1, 2, 5, 6
⇕	DNP OBJECT 23 DEFAULT VARIATION: 1	Range: 1, 2, 5, 6
⇕	DNP OBJECT 30 DEFAULT VARIATION: 1	Range: 1, 2, 3, 4, 5
⇕	DNP OBJECT 32 DEFAULT VARIATION: 1	Range: 1, 2, 3, 4, 5, 7
⇕	DNP NUMBER OF PAIRED CONTROL POINTS: 0	Range: 0 to 32 in steps of 1
⇕	DNP TCP CONNECTION TIMEOUT: 120 s	Range: 10 to 7200 s in steps of 1
⇧	DNP EVENT TIME BASE: LOCAL	Range: UTC, LOCAL

DNP TCP/UDP PORT NUMBER

This setting is for normal DNP operation. To close the port, set the port number to 0.

DNP UNSOL RESPONSE FUNCTION

This is set to `Disabled` for RS485 applications since there is no collision avoidance mechanism.

DNP UNSOL RESPONSE TIMEOUT

This sets the time the relay waits for a DNP master to confirm an unsolicited response.

The DNP UNSOL RESPONSE MAX RETRIES

This setting determines the number of times the relay retransmits an unsolicited response without receiving confirmation from the master; a value of `255` allows infinite re-tries.

DNP UNSOL RESPONSE DEST ADDRESS

This is the DNP address to which all unsolicited responses are sent. The IP address to which solicited responses are sent is determined by the relay from the current TCP connection or the most recent UDP message. The DNP scale factor settings are numbers used to scale analog input point values. These settings group the analog input data into the following types: current, voltage, power, energy, power factor, and other. Each setting represents the scale factor for all analog input points of that type. For example, if the ***DNP VOLTAGE SCALE FACTOR*** setting is set to `1000`, all DNP analog input points that are voltages are returned with values 1000 times smaller (for example, a value of 72000 V on the relay is returned as 72). These settings are useful when analog input values must be adjusted to fit within certain ranges in DNP masters. Note that a scale factor of 0.1 is equivalent to a multiplier of 10 (that is, the value is 10 times larger).

DNP DEFAULT DEADBAND

These settings determine when to trigger unsolicited responses containing analog input data. These settings group the analog input data into the following types: current, voltage, power, energy, power factor, and other. Each setting represents the default deadband value for all analog input points of that type. For example, to trigger unsolicited responses from the relay when any current values change by 15 A, the ***DNP CURRENT DEFAULT DEADBAND*** setting is set to `15`. Note that these settings are the deadband default values. DNP object 34 points can be used to change deadband values, from the default, for each individual DNP analog input point.

DNP TIME SYNC IIN PERIOD

This setting determines how often the Need Time Internal Indication (IIN) bit is set by the relay. Changing this time allows the DNP master to send time synchronization commands more or less often, as required.

DNP MESSAGE FRAGMENT SIZE

This setting determines the size, in bytes, at which message fragmentation occurs. Large fragment sizes allow for more efficient throughput; smaller fragment sizes cause more application layer confirmations to be necessary, which provides more robust data transfer over noisy communication channels.

> *Note:*
> *Check the **DNP Points Lists** relay web page to view the analog inputs and/or binary inputs points lists. This page can be viewed with a web browser by entering the IP address of the Ethernet port employed to access the Main Menu, then by clicking the **Device Information Menu** item, then the **DNP Points Lists** item.*

DNP OBJECT 1 DEFAULT VARIATION to DNP OBJECT 32 DEFAULT VARIATION

These settings select the DNP default variation number for object types 1, 2, 20, 21, 22, 23, 30, and 32. The default variation refers to the variation response when variation 0 is requested and/or in class 0, 1, 2, or 3 scans.

The DNP binary outputs typically map one-to-one to IED data points. That is, each DNP binary output controls a single physical or virtual control point in an IED. DNP binary outputs are mapped to virtual inputs. However, some legacy DNP implementations use a mapping of one DNP binary output to two physical or virtual control points to support the concept of trip/close (for circuit breakers) or raise/lower (for tap changers) using a single control point. That is, the DNP master can operate a single point for both trip and close, or raise and lower, operations. The relay can be configured to support paired control points, with each paired control point operating two virtual inputs.

DNP NUMBER OF PAIRED CONTROL POINTS

This setting allows configuration of 0 to 64 binary output paired controls. The control points pairing starts from the highest number of binary outputs available i.e. 128. Points not configured as paired operate on a one-to-one basis.

So if you select a value of `2` for this setting, the pairing starts from the highest number; 128. Control points 128-127 and 126-125 operate in pairs and the rest (1-124) are operated individually.

DNP TCP CONNECTION TIMEOUT

This setting specifies a time delay for the detection of dead network TCP connections. If there is no data traffic on a DNP TCP connection for greater than the time specified by this setting, the connection is aborted. This frees up the connection to be re-used by a client.

See the UR Family Communications Guide for more information on DNP.

> *Note:*
> *For any change to DNP settings, restart the relay.*

DNP CHANNELS sub-menu

■ DNP Channels ■	⇔	DNP CHANNEL 1 PORT: NONE	Range: NONE, COM1 - RS485, COM2 - RS485, FRONT PANEL - RS232, NETWORK - TCP, NETWORK - UDP
	⇧	DNP CHANNEL 2 PORT: NONE	Range: NONE, COM1 - RS485, COM2 - RS485, FRONT PANEL - RS232, NETWORK - TCP

The ***DNP CHANNEL 1 PORT*** and ***DNP CHANNEL 2 PORT*** settings select the communications port assigned to the DNP protocol for each channel. Once DNP is assigned to a serial port, DNP is the only protocol running on that port; Modbus or IEC 60870-5-103 are disabled. If DNP is assigned to RS485, the protocol must be set to DNP on the serial port configuration as well, for the change to take effect. When the ***DNP CHANNEL <n> PORT*** setting is set to `Network - TCP`, the DNP protocol can be used over TCP/IP on the Ethernet ports. When this value is set to `Network - UDP`, the DNP protocol can be used over UDP/IP on channel 1 only. The `Front Panel - RS232` value does not apply to the graphical front panel; when selected the DNP client cannot establish a connection on a USB port.

> *Note:*
> *Do not set more than one protocol to the same TCP/UDP port number, as this results in unreliable operation of those protocols.*

The ***DNP ADDRESS*** setting is the DNP slave address. This number identifies the relay on a DNP communications link. Assign a unique address to each DNP slave.

The relay can specify a maximum of five clients for its DNP connections. These are IP addresses for the controllers to which the relay can connect. The settings are defined in the following sub-menu.

DNP NETWORK CLIENT ADDRESS sub-menu

■ DNP Channels ■	⇔	CLIENT ADDRESS 1: 0.0.0.0	Range: standard IP address
	⇧	CLIENT ADDRESS 2: 0.0.0.0	Range: standard IP address
		CLIENT ADDRESS 3: 0.0.0.0	Range: standard IP address
		CLIENT ADDRESS 4: 0.0.0.0	Range: standard IP address
		CLIENT ADDRESS 5: 0.0.0.0	Range: standard IP address

9.4.4.8 DNP / IEC 60870-5-104 POINT LISTS

You can configure up to 256 binary and up to 256 analog input points for the DNP protocol, or the MSP and MME points for IEC 60870-5-104 protocol. The value for each point is user-programmable and can be configured by assigning FlexLogic operands for binary inputs / MSP points or FlexAnalog parameters for analog inputs / MME points. The menu is as follows:

Setting path: ***SETTINGS > PRODUCT SETUP > COMMUNICATIONS > DNP / IEC104 POINT LISTS***

■ DNP / IEC104 ■ POINT LISTS	⇔	■ BINARY INPUT / MSP ■ POINTS
	⇕	■ ANALOG INPUT / MME ■ POINTS

You can configure to 256 binary input points for the DNP or IEC 60870-5-104 protocols. The points are configured by assigning an appropriate FlexLogic operand. See the FlexLogic section for the range of assignable operands.

The menu for the binary input points (DNP) or MSP points (IEC 60870-5-104) follows.

■ BINARY INPUT / MSP ■ POINTS	⇔	POINT: <n> Off	Range: FlexLogic operand

where n is 0 to 255.

You can configure up to 256 analog input points for the DNP or IEC 60870-5-104 protocols. The analog point list is configured by assigning an appropriate FlexAnalog parameter to each point. See the FlexAnalog Parameters section for the range of assignable parameters.

The menu for the analog input points (DNP) or MME points (IEC 60870-5-104) follows.

■ ANALOG INPUT / MME ■ POINTS	⇔	POINT: <n> Off	Range: any FlexAnalog parameter

where n is 0 to 255.

> *Note:*
> *Changes to the DNP / IEC 60870-5-104 point lists take effect when the relay is restarted*

> *Note:*
> *The DNP / IEC 60870-5-104 point lists always begin with point 0 and end at the first `Off` value. Since DNP / IEC 60870-5-104 point lists must be in one continuous block, any points assigned after the first `Off` point are ignored.*

9.4.4.9 WEB SERVER HTTP PROTOCOL

Setting path: ***SETTINGS > PRODUCT SETUP > COMMUNICATIONS > WEB SERVER HTTP PROTOCOL***

■ WEB SERVER ■ HTTP PROTOCOL	⇔	HTTP TCP PORT NUMBER(80): 80	Range: 0 to 65535 in steps of 1

The relay contains an embedded web server and can display pages in a web browser. The web pages are organized as a series of menus that can be accessed starting at the Main Menu. Web pages are read-only and are available showing IEC 60870-5-104 points lists, Modbus registers, event records, fault reports, and so on. First connect the relay and a computer to an Ethernet network, then enter the IP address of the relay Ethernet port in a web browser. To close the port, set the port number to `0`.

Any change takes effect when the relay is restarted.

GE Multilin

C60 Breaker Relay
Revision 7.31

Relay Name: **Relay-1**
IP Address: **10.14.22.72**

UR

Event Recorder: Last 10 Events

Click Here For The Main Menu

Event Number	Time and Date	Event Cause
214	Nov 04 2014 14:02:56.062087	PROTOTYPE FIRMWARE
213	Nov 04 2014 14:02:56.062087	POWER ON
212	Nov 03 2014 14:00:20.364906	POWER OFF
211	Nov 03 2014 13:55:15.061866	PROTOTYPE FIRMWARE
210	Nov 03 2014 13:55:15.061866	POWER ON
209	Nov 03 2014 13:10:59.733179	POWER OFF
208	Nov 03 2014 13:06:11.062104	PROTOTYPE FIRMWARE
207	Nov 03 2014 13:06:11.062104	POWER ON
206	Oct 31 2014 10:07:25.078203	POWER OFF
205	Oct 31 2014 10:00:44.062027	PROTOTYPE FIRMWARE

Figure 213: Example of UR web page showing event records

> *Note:*
> *Do not set more than one protocol to the same TCP/UDP port number, as this results in unreliable operation of those protocols*

9.4.4.10 TFTP PROTOCOL

Setting path: ***SETTINGS > PRODUCT SETUP > COMMUNICATIONS > TFTP PROTOCOL***

■ TFTP PROTOCOL ■	⇔	TFTP MAIN UDP PORT NUMBER(69): 69	Range: 0 to 65535 in steps of 1
	⇩	TFTP DATA UDP PORT 1 NUMBER: 0	Range: 0 to 65535 in steps of 1
	⇧	TFTP DATA UDP PORT 2 NUMBER: 0	Range: 0 to 65535 in steps of 1

The Trivial File Transfer Protocol (TFTP) can be used to transfer files from the relay over a network. The relay operates as a TFTP server. TFTP client software is available from various sources, including Microsoft Windows NT. The `dir.txt` file obtained from the relay contains a list and description of all available files, for example event records and oscillography.

The `put` function is not available for security reasons. You can enter a `get` command but not a `put` command.

TFTP MAIN UDP PORT NUMBER

To close the port, set the port number to `0`. Any change takes effect when the relay is restarted.

> *Note:*
> *Do not set more than one protocol to the same TCP/UDP port number, as this results in unreliable operation of those protocols.*

9.4.4.11 IEC 60870-5-104 PROTOCOL

Setting path: ***SETTINGS > PRODUCT SETUP > COMMUNICATIONS > IEC 60870-5-104 PROTOCOL***

■ IEC 60870-5-104 ■ PROTOCOL	⇔	IEC TCP PORT NUMBER(2404): 2404	Range: 0 to 65535 in steps of 1
	⇕	■ IEC NETWORK ■ CLIENT ADDRESSES	
	⇕	IEC COMMON ADDRESS OF ASDU: 0	0 to 65535 in steps of 1
	⇕	IEC CYCLIC DATA PERIOD: 60 s	Range: 1 to 65535 in steps of 1
	⇕	IEC CURRENT DEFAULT THRESHOLD: 30000	Range: 0 to 100000000 in steps of 1
	⇕	IEC VOLTAGE DEFAULT THRESHOLD: 30000	Range: 0 to 100000000 in steps of 1
	⇕	IEC POWER DEFAULT THRESHOLD: 30000	Range: 0 to 100000000 in steps of 1
	⇕	IEC ENERGY DEFAULT THRESHOLD: 30000	Range: 0 to 100000000 in steps of 1
	⇕	IEC PF DEFAULT THRESHOLD: 1.00	Range: 0.00 to 1.00
	⇕	IEC OTHER DEFAULT THRESHOLD: 30000	Range: 0 to 100000000 in steps of 1
	⇕	IEC REDUNDANCY ENABLED: No	Range: No, Yes
	⇧	IEC EVENT TIME BASE: LOCAL	Range: Local, UTC

The relay supports the IEC 60870-5-104 protocol. IEC 60870-5-104 is a transmission protocol for network access, specifically for communication between a control station and substation over a TCP/IP network. The relay can be used as an IEC 60870-5-104 slave device connected to a maximum of two masters (usually either an RTU or a SCADA master station). Since the relay maintains two sets of IEC 60870-5-104 data change buffers, ideally no more than two masters actively communicate with the relay at one time.

IEC TCP PORT NUMBER

This setting sets the TCP port number. To close the port, set the port number to `0`. Any change takes effect when the relay is restarted.

IEC COMMON ADDRESS OF ASDU

This setting sets the ASDU address number. The change takes effect when the relay is restarted.

IEC CYCLIC DATA PERIOD

This setting sets the time of each cycle. The change takes effect when the relay is restarted.

The DEFAULT threshold settings

The default threshold settings are used to determine when to trigger spontaneous responses containing M_ME_NC_1 analog data. These settings group the analog data into types: current, voltage, power, energy, and other. Each setting represents the default threshold value for all M_ME_NC_1 analog points of that type. For example, to trigger spontaneous responses from the relay when any current values change by 15 A, the ***IEC***

CURRENT DEFAULT THRESHOLD setting is set to 15. Note that these settings are the default values of the deadbands. P_ME_NC_1 (parameter of measured value, short floating point value) points can be used to change threshold values, from the default, for each individual M_ME_NC_1 analog point. Whenever power is removed and re-applied, the default thresholds are in effect.

IEC REDUNDANCY

This setting decides whether multiple client connections are accepted or not. If redundancy is set to `Yes`, two simultaneous connections can be active at any given time.

IEC Event timebase

This setting sets which time source to use, Local or UTC.

> *Note:*
> *Do not set more than one protocol to the same TCP/UDP port number, as this results in unreliable operation of those protocols.*

IEC NETWORK CLIENT ADDRESS sub-menu

■ IEC NETWORK ■ CLIENT ADDRESSES	⇔	CLIENT ADDRESS <n>: 0.0.0.0	Range: standard IPV4 address format

where n = 1 to 5

9.4.4.12 IEC 60870-5-103 PROTOCOL

The relay is provided with optional IEC 60870-5-103 communications capability, specified as a software option at the time of ordering.

Setting path: ***SETTINGS > PRODUCT SETUP > COMMUNICATIONS > IEC 60870-5-103 PROTOCOL***

■ IEC103 ■ PROTOCOL	⇔	IEC103 COMMON ADDRESS OF ASDU: 0	Range: 0 to 254 in steps of 1
	⇕	IEC103 SYNC TIMEOUT: 1	Range: 1 to 1440 min in steps of 1
	⇕	■ IEC103 INPUTS ■ BINARY	
	⇕	■ IEC103 INPUTS ■ MEASURANDS	
	⇕	■ IEC103 COMMANDS ■	

IEC 60870-5-103 is a companion standard to the IEC 60870-5 suite of standards for transmission protocols. It defines messages and procedures for interoperability between protection equipment and devices of a control system in a substation for communicating on a serial line.

The IEC 60870-5-103 is an unbalanced (master-slave) protocol for coded-bit serial communication, exchanging information with a control system. In the context of this protocol, the protection equipment is the slave and the control system is the master. The communication is based on a point-to-point principle. The master must be able to interpret the IEC 60870-5-103 communication messages.

The UR implementation of IEC 60870-5-103 consists of the following functions:

- Report binary inputs
- Report analog values (measurands)
- Commands
- Time synchronization

The RS485 port supports IEC 60870-5-103.

The UR Family Communications Guide contains more information on the protocol.

IEC103 COMMON ADDRESS OF ASDU

This setting uniquely defines this relay on the serial line. The ID is an integer between 0 and 254. This ID does not need to be in sequential order for all stations that communicate with a controller, but we recommend it. Note that RS485 allows a maximum of 32 slave stations on a communication line, so the entire range of 254 addresses is never exhausted.

IEC103 SYNC TIMEOUT

This setting defines the time that the relay waits for a synchronization message. The relay synchronizes its clock using all available sources, with the source synchronizing more frequently overwriting the time of the other sources. Since the synchronization message received from the IEC 60870-5-103 master is less frequent than IRIG-B, PTP, or SNTP, its time is overwritten by these three sources, if any of them is active. If the synchronization timeout occurs and none of IRIG-B, PTP, or SNTP is active, the relay sets the invalid bit in the time stamp of a time-tagged message.

The settings for the remaining sub-menus are outlined as follows.

IEC 103 INPUTS BINARY sub-menus

■ IEC103 INPUTS ■ BINARY	⇔	■ POINT <n>: ■

where n = 0 to 95

■ POINT <n>: ■	⇔	POINT <n> FUN 0	Range: 0 to 255 in steps of 1
	⇕	POINT <n> INF 0	Range: 0 to 255 in steps of 1
	⇕	POINT <n> Input Off	Range: FlexLogic operand

where n = 0 to 95

The binary input points are mapped using elements from a list of possible FlexLogic operands. A maximum of 96 binary inputs (points) can be mapped this way.

The IEC 60870-5-103 point list always starts with point 0 and ends at the first *Off* value. Since the IEC 60870-5-103 point list must be in a continuous block, any points assigned after the first *Off* point are ignored.

For each defined point, set appropriate values for the Function Type (FUN) and Information Number (INF), which form the Information Object Identifier field of the ASDU, as defined in IEC 60870-5-103.

The binary input points are sent as Class 1 data. They are sent either as a response to a general interrogation received from the controller or reported spontaneously. Spontaneous transmission occurs as a response to cyclic Class 2 requests. If the relay wants to transmit Class 1 data at that time, it demands access for Class 1 data transmission (ACD=1 in the control field of the response).

For any change to take effect, restart the relay.

IEC 103 INPUTS MEASURANDS sub-menus

■ IEC103 INPUTS ■ MEASURANDS	⇔	■ ASDU <n> ■

where n = 1 to 4

In the following, only ASDU 1 is shown.

■ ASDU 1: ■	⇔	ASDU 1 TYP: 9	Range: 3 or 9
	⇕	ASDU <n> FUN: 0	Range: 0 to 255 in steps of 1
	⇕	ASDU 1 INF: 0	Range: 0 to 255 in steps of 1
	⇕	ASDU 1 SCAN TOUT: 0	
	⇕	ASDU 1 ANALOG <n> Off	
	⇕	ASDU 1 ANALOG <n> FACTOR: 1.000	
	⇕	ASDU 1 ANALOG <n> OFFSET: 0	

where n = 1 to 9

The configuration menu allows a maximum of four ASDUs containing measurands. Measurands are sent as a response to Class 2 requests, which are cyclic requests coming from the master.

TYPE IDENTIFICATION (TYP)

The configuration field TYP indicates how many measurands are present in the corresponding ASDU. Each ASDU can take either 4 or 9 measurands maximum, depending on the type identification. For any change to take effect, restart the relay.

FUNCTION TYPE (FUN) and INFORMATION NUMBER (INF)

These two fields form the Information Object Identifier of the ASDU as defined in IEC 60870-103. For any change to take effect, restart the relay.

SCAN TIMEOUT (SCAN TOUT)

This is the cyclic period used by the relay to decide when a measurand ASDU is included in a response. The measurand is sent as response to a Class 2 request when the corresponding timeout expires. The default value 0 means 500 ms.

ANALOG

This field contains the actual measurand to be sent in the response to the master. The measurands can be mapped using elements from a list of FlexAnalog operands. The measurands sent are voltage, current, power, power factor, frequency and fault location (in km or miles). If any other FlexAnalog is chosen, the relay sends 0 instead of its value. Note that the power is transmitted in kW, not W. Measurands are transmitted as ASDU 3 or ASDU 9 (type identification value set to measurands I, respectively measurands II).

Each IEC 60870-5-103 measurands list ends at the first `Off` value. Any measurand assigned after the first `Off` value is ignored.

At least one measurand per ASDU must be configured in order to configure the following ASDU. For example, the user can configure only one measurand for each ASDU, but the user is not allowed to skip ASDU 2 and configure measurands in ASDU 3.

For any change to take effect, restart the relay.

ANALOG # FACTOR and OFFSET

For each measurand included in the ASDU, a factor and offset also can be configured. The factor and offset allow for scaling to be performed on measurands. The final measurement sent to the IEC 60870-103 master is then $ax + b$, where x is the measurand, a is the multiplying factor and b is the offset. The master has to perform the reversed operation in order to retrieve the actual value if such scaling is done. By default a = 1 and b = 0, so no scaling is done if these values are left at their defaults. Examples of when scaling is appropriate are as follows:

- If the measured value contains decimals and it is important to preserve the resolution.
  Since the format for transmitting the measurand does not permit decimals, a factor a>1 can be applied before transmission. For example, a frequency of 59.9Hz can be transmitted as $Ft = 10 * F = 10 * 59.9 = 599$. In this case $a = 10, b = 0$. The master receives a value of 599 and has to divide by 10 to retrieve the real value of 59.9.
- If the measured value is larger than what fits in the format defined in IEC 103.
  The format defined in the standard allows for signed integers up to 4095. By offsetting, unsigned integers up to $4096 + 4095 = 8191$ are supported. Scaling using factors <1 may be required in such cases. The calculation is outlined in the IEC 60870-5-103 chapter of the UR Family Communications Guide. Two examples follow, where you decide factors a and b.

Example 1

Nominal power Pn = 100 MW = 100000 KW (power is transmitted in KW)

Since P can be both positive and negative:

Transmitted power Pt = (4095/(Pn*2.4)) * P = (4095/(100000 * 2.4)) * P = 0.017 * P

a = 0.017

b = 0

Pt = 0.017 * P

For a max power 100000 KW * 2.4 = 240000 KW, we transmit

Pt = 0.017 * 240000 = 4080

A value above 240 MW is indicated by overflow.

Example 2

Nominal voltage Vn = 500000 V

Since RMS voltage V can be only positive:

Transmitted voltage Vt = (8191/(Vn*2.4)) * V - 4096 = (8191/(500000 * 2.4)) * V - 4096 = 0.0068 * V - 4096

a = 0.0068

Since the step is in increments of 0.001, we round it at:

a = 0.006

b = -4096

Vt = 0.006 * V - 4096

For max voltage 500000 V * 2.4 = 1200000 V, we transmit

Vt = 0.006 * 1200000 - 4096 = 7200 - 4096 = 3104

IEC 103 COMMANDS sub-menus

■ IEC103 COMMANDS ■	⇔	■ COMMAND <n> ■

where n = 0 to 31

In the following, only ***COMMAND 0*** is shown.

■ COMMAND 0: ■	⇔	COMMAND 0 FUN: 0	Range: 0 to 255 in steps of 1
	⇕	COMMAND 0 INF: 0	Range: 0 to 255 in steps of 1
	⇕	COMMAND 0 ON: Off	Range: Virtual input
	⇕	COMMAND 0 OFF: Off	Range: Virtual input

Commands are received as General Command (Type Identification 20). You can configure the action to perform when an ASDU command comes.

A list of available mappings is provided on the relay. This includes 128 virtual inputs (see the following table). The `ON` and `OFF` for the same ASDU command can be mapped to different virtual inputs.

Each command is identified by the unique combination made by the function type (FUN) and information number (INF). If the master sends an ASDU command that does not have the FUN and INF of any configured command, the relay rejects it.

IEC 103 COMMANDS mapping table

Description	Value
Off	0
Virtual Input 1	1
Virtual Input 2	2
...	...
Virtual Input 128	128

For any change to take effect, restart the relay.

9.4.4.13 USB PORT

Setting path: ***SETTINGS > PRODUCT SETUP > COMMUNICATIONS > USB 2.0***

■ USB 2.0 ■	⇔	USB DEVICE PORT FUNCTION: Enabled	Range: Disabled, Enabled

Note:
This setting applies to the USB port on the graphical front panel

This setting enables/disables the USB port on the graphical front panel. When the port function is enabled, a standard USB serial cable allows a computer running the EnerVista UR Setup software to retrieve, display, and write settings either individually or collectively, to display status and actual values, to initiate controls, and to retrieve and display event records, oscillography records, data logger records, and disturbance records. Installation of the EnerVista software automatically installs the drivers required to use this USB port.

DNP is not available using the USB port on the graphical front panel.

9.4.5 MODBUS USER MAP

Setting path: ***SETTINGS > PRODUCT SETUP > MODBUS USER MAP***

■ MODBUS USER MAP ■	⇔	ADDR 1: 0 VALUE: 0	n = 1 to 256 Range: 0 to 65535 in steps of 1

The Modbus user map provides read-only access for up to 256 registers. The memory map can be read from the front panel, the UR Family Communications Guide, or in a web browser. For the web browser, enter the IP address of the Product and click a Modbus Memory Map option.

On the front panel, the address to read a specific Modbus register depends on whether the requested value is a setting or an actual value.

Up to firmware version 7.8x, the settings and actual values are in the same Modbus table. To obtain a memory map value, enter its address on the front panel.

Starting in firmware version 7.90, the settings have their own Modbus memory table and the actual values are in their own table. To obtain a memory map value, use the following sequence:

1. Obtain the hexadecimal Modbus address of the data item. It must have four digits, such as 024A.
2. Prefix the address by 3 for settings or by 4 for actual values.
3. Convert the resulting hexadecimal number to decimal.
4. Enter the resulting number in the first column of the Modbus user map. The corresponding value (if programmed) displays in second column (VALUE). A value of "0" in subsequent register lines automatically returns values of Modbus registers having the address of the previous line incremented by 1. These subsequent addresses are all in the same Modbus table (settings or actual values) as the address that was entered. An address value of "0" in the initial register means "none" and values of "0" display for all registers. Different address values can be entered as required in any of the register positions.

Here are two examples of how to add a setting or actual value to the front panel Modbus user map.

To add the setting ***Phase TOC 1 Pickup*** to the Modbus user map:

1. Find the address of the setting ***Phase TOC 1 Pickup***, which is 334Eh (334E in hexadecimal format).
2. Prefix this address by 3 to obtain 3334Eh.
3. Convert this value to decimal to obtain 209742 and enter it on the front panel.

To add the actual value ***SRC 1 Frequency*** to the Modbus user map:

1. Find the address of the actual value ***SRC 1 Frequency***, which is 1D80h.
2. Prefix this address by 4 to obtain 41D80h.
3. Convert this value to decimal to obtain 269696 and enter it on the front panel.

9.4.6 REAL-TIME CLOCK

Setting path: ***SETTINGS > PRODUCT SETUP > REAL TIME CLOCK***

■ REAL TIME ■ CLOCK	⇔	SYNCHRONIZING SOURCE: None	Range: None, PP/IRIG-B/PTP/Other, IRIG-B/PP/PTP/Other, PP/PTP/IRIG-B/Other, PBM Clock
	⇕	REAL TIME CLOCK EVENTS: Disabled	Range: Enabled, Disabled
	⇕	IRIG-B SIGNAL TYPE: None	Range: None, DC Shift, Amplitude Modulated
	⇕	■ PRECISION TIME ■ PROTOCOL (1588)	

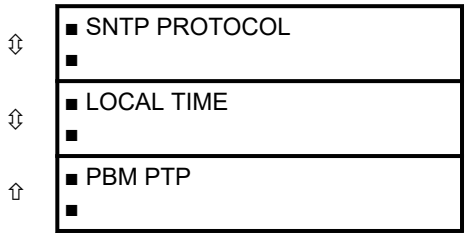

The relay contains a real time clock (RTC) to create time stamps for communications protocols as well as for historical data, such as event records and oscillography. When the relay restarts, the RTC initializes from an onboard clock (backed up by supercapacitor for TL and TH models, or battery for SL and SH models). The RTC has an accuracy of approximately ±1 minute per month (~23 ppm). Once the RTC is synchronized with the Precision Time Protocol (PTP), IRIG-B, or SNTP, its accuracy approaches that of the synchronizing time delivered to the relay. While the RTC is not synchronized via PTP or IRIG-B, or the relay determines that it has an offset possibly greater than 10 µs from the international time standard, the CLOCK UNSYNCHRONIZED FlexLogic operand is activated. When channel asymmetry function is used, the relay's real time clock must be synchronized to an external time source using PTP or IRIG-B, typically from a global positioning system (GPS) receiver.

SYNCHRONIZING SOURCE

This setting is shown when the relay includes the IEEE 1588 software option. The setting configures the priority sequence of the time synchronization source, to determine which of the available external time sources to use for time synchronization. A setting value of `None` causes the RTC and the synchrophasor clock to free-run, and the clock can be changed from the front panel or from communications protocols. A setting value of `PP/IRIG-B/PTP/Other`, `IRIG-B/PP/PTP/Other`, or `PP/PTP/IRIG-B/Other` causes the relay to track the first source named that is enabled and operational, or free-run if none of these are available. Here, `PP` means a time source that is strictly compliant with PP, `PTP` means a time source that is not strictly compliant with PP, and `Other` means any less precise source (SNTP, IEC 103, IEC 104, Modbus, or DNP). When a time source fails or recovers, the relay automatically transfers synchronization as required by this setting.

Selecting `PBM Clock` causes the relay to use the time source from any non-HardFiber Process Bus Module clock. If the Process Bus Module ***PTP FUNCTION*** setting is enabled and PTP grandmaster is available in the process bus network, the Process Bus Module clock is synchronized to the PTP grandmaster. If this is not the case, the Process Bus Module clock free-runs. A relay can use a synchronizing source either from the real-time clock (main CPU) or a Process Bus Module.

Note that a relay does not need to be time synchronized to accept the sampled values. All the elements (protection, control, monitoring, logic, and so on) in the UR (except Line Current Differential element) remain fully functional without requiring any external synchronizing source for the UR, as long as all the sampled values subscribed by the relay are synchronized according to the ***Settings > Process Bus Module > General > SmpSynch Check*** setting and pass the other acceptance criteria as defined in ***Settings > Process Bus Module > SV Stream Config > Logic***.

> *Note:*
> *Some UR applications like oscillography, event recorder, and datalogger use the real-time clock for time-stamping.*

If clock synchronization is lost, the Line Current Differential function is blocked. All other elements remain functional.

When the relay does not have the IEEE 1588 software option and this setting does not display, it uses IRIG-B when enabled and operational. If IRIG-B is not available the it uses SNTP (if configured). If SNTP is not available it free-runs, unless the clock is changed from the front panel or from communications protocols.

For the Other protocols, whenever a time synchronization message is received through any of the active protocols, the clock updates. However, given that IEC 60870-5-103, IEC 60870-5-104, Modbus, and DNP are low-accuracy time synchronization methods, avoid their use for synchronization when better accuracy time protocols, such as IRIG-B and PTP, are available. If IRIG-B or PTP is used to update the relay clock, the other protocols (such as SNTP) are prevented from being used to update, even if active.

See the ***COMMANDS > SET DATE AND TIME*** menu section of this manual to manually set the RTC.

> *Note:*
> *When 1 ms accuracy is required for events, oscillography, time stamping, synchrophasors, and 87L asymmetry with respect to the master clock, the PTP clock needs to be connected to the CPU of a relay. The 1 ms accuracy cannot be maintained if the CPU is synchronized through the Process Bus Module due to a delay up to 2 ms in transmitting a time stamp from the Process Bus Module to a CPU.*

REAL TIME CLOCK EVENTS

This setting allows changes to the date and/or time to be captured in the event record. The event records the RTC time before the adjustment. A Date/Time Changed event is generated when:

- The real time clock changed from `SNTP/PTP/IRIG-B` and the time difference is more than one second
- The real time clock changed from the front panel or via Modbus register. The relay always generates this event regardless of the time difference.
- The Daylight Saving Time (DST) setting gets enabled and the current relay time is already in the DST zone
- The real time clock enters or leaves DST

IRIG-B SIGNAL TYPE

To enable IRIG-B synchronization, the input ***IRIG-B SIGNAL TYPE*** must be set to `DC Shift` or `Amplitude Modulated`. Make this setting `None` to disable IRIG-B synchronization. When IRIG-B is enabled and active, clock synchronization by communication protocols DNP, IEC 60870-5-103 or IEC 60870-5-104 is blocked. Clock synchronization from the front panel and over Modbus is always enabled.

Clocks can be synchronized locally among several relays using the computer time. When using a time source, such as IRIG-B, the time is overwritten eventually by the time source. To synchronize clocks among UR devices:

1. In the EnerVista software, expand the main menu in the Online Window area and select the **Synchronize Devices** entry. The software prompts to acknowledge any offline devices.
2. Click the **Synchronize Devices** button at the top of the window, and confirm the action at the prompt. The devices adopt the time of the computer being used.

To configure and enable PTP and/or SNTP, or to set local time parameters (for example time zone, daylight savings), use the sub-menus described in the following sections.

The relay supports the adjustment of real-time clock for the leap second (addition or removal of a leap second) per applicable standards, when the UR is synchronized using PTP or IRIG-B. The Flexlogic operand LEAP SECOND DETECTED gets asserted for 1 second when leap second adjustment is made and event is recorded in the events log. The following functions are affected by the leap second time adjustment:

- Real-time clock
- Synchrophasors publishing and Comtrade recording
- Regular transient recorder Comtrade and data logger Comtrade.
- Event Logger

9.4.6.1 PRECISION TIME PROTOCOL (1588)

Setting path: ***SETTINGS > PRODUCT SETUP > REAL TIME CLOCK > PRECISION TIME PROTOCOL (1588)***

■ PRECISION TIME ■ PROTOCOL (1588)	⇔	STRICT POWER PROFILE: Disabled	Range: Enabled, Disabled
	⇕	PTP DOMAIN NUMBER: 0	Range: 0 to 255
	⇕	PTP VLAN PRIORITY: 4	Range: 0 to 7

⇕	PTP VLAN ID: 0	Range: 0 to 4095
⇧	■ PTP PORT <n> ■	

where n = 1 to 3

The following sub-menu for ***PTP PORT <n>*** is shown below:

Sub-menu PTP PORT 1

■ PTP PORT 1 ■	⇔	PORT 1 PTP FUNCTION: Disabled	Range: Enabled, Disabled
	⇕	PORT 1 PATH DELAY ADDER: 0 ns	Range: 0 to 60000 ns in steps of 1
	⇧	PORT 1 PATH DELAY ASYMMETRY: 0 ns	Range: –1000 to +1000 ns in steps of 1

The relay provides optional Precision Time Protocol (PTP) capability. This feature is specified as the IEEE 1588 software option at the time of ordering.

The relay supports the Precision Time Protocol (PTP) specified in IEEE Std 1588 2008 using the Power Profile (PP) specified in IEEE Std C37.238 2017. This enables the relay to synchronize to the international time standard over an Ethernet network that implements PP.

The relay can be configured to operate on some PTP networks that are not strictly PP compliant. Time accuracy can be less than specified for a PP network. Tolerated deviations from strict PP include:

- Missing declaration of PP compliance in the messages
- Connection to a network device that does not support the PTP peer delay mechanism
- Jitter substantially greater than 1 µs in received event messages
- Certain non-compliant announce and sync message update rates

The relay implements PTP according to IEEE Std 1588 2008 and the equivalent IEC 61588:2009(E), sometimes referred to as version 2 PTP. It does not support version 1 of the standard.

PTP is a protocol that allows multiple clocks in a network to synchronize with one another. It permits synchronization accuracies better than 1 ns, but this requires that each and every component in the network can achieve very high levels of accuracy and a very high baud rate, faster than normally used for relay communications. When operating over a generic Ethernet network, time errors can amount to 1 ms or more. PP is a profile of PTP which specifies a limited subset of PTP suitable for use in power system protection, control, automation, and data communication applications, and thereby facilitates interoperability between different vendor’s clocks and switches. PP specifies a worst-case delivered time error of less than 1 µs over a 16-hop network.

In a PTP system and in a PP system, the clocks automatically organize themselves into a master-slave synchronization hierarchy with the best clock available making itself the 'grandmaster' at the top of the hierarchy. All other clocks make themselves slaves and track the grandmaster. Typically the grandmaster clock receives its time from GPS satellites or some other link to the international time standard. If the grandmaster fails, the next best clock available in the domain assumes the grandmaster role. When a clock on start-up discovers that it is better than the present grandmaster, it adopts the grandmaster role and the previous grandmaster reverts to slave. The qualification mechanism accepts a potential master clock as a new grandmaster, when in a four-second interval it has received three announce messages from it, all better than the present grandmaster clock and better than any other announce in this interval.

Time messages issued by the grandmaster are delayed as they pass through the network both due to the finite speed of the signal in the interconnecting fiber or wire, and due to processing delays in the Ethernet switches. Each clock and switch implementing PP measures the propagation delay to each of its PP neighbors, and compensates

for these delays in the time received. Each network device implementing PP measures the processing delay it introduces in each time message and compensates for this delay in the time it transmits. As a result, the time delivered to end-devices such as the relay, are virtually identical to the grandmaster time. If one of the network devices in the hierarchy does not fully implement PP, the associated propagation delay and/or latency may not be compensated for, and the time received at the end-device can be in error by more than 100 µs.

The following settings are available for configuring the relay for PTP. The PTP menu displays only when the option is purchased.

STRICT POWER PROFILE

Power profile (IEEE Std C37.238 2017) requires that the relay only selects a clock as a grandmaster, which is compliant with PP. This means the delivered time has a worst-case error of ±1 µs, and the peer delay mechanism is implemented. With the strict power profile setting enabled, the relay only selects as master the clocks displaying the IEEE_C37_238 identification codes. It uses a port only when the peer delay mechanism is operational. With the strict power profile setting disabled, the relay uses clocks without the power profile identification when no power profile clocks are present, and uses ports, even if the peer delay mechanism is non-operational. This setting applies to all of the relay's PTP-capable ports.

PTP DOMAIN NUMBER

Set this setting to the domain number of the grandmaster-capable clock(s). A network can support multiple time distribution domains, each distinguished with a unique domain number. More commonly, there is a single domain using the default domain number zero. This setting applies to all of the relay's PTP-capable ports.

PTP VLAN PRIORITY

This setting selects the value of the priority field in the 802.1Q VLAN tag in request messages issued by the relay's peer delay mechanism. In compliance with PP, the default VLAN priority is 4, but we recommend you set it to 7 in accordance with PTP. Depending on the characteristics of the device to which the relay is linked directly, VLAN Priority may have no effect. This setting applies to all of the relay's PTP-capable ports.

PTP VLAN ID

This setting selects the value of the ID field in the 802.1Q VLAN tag in request messages issued by the relay's peer delay mechanism. It is provided in compliance with PP. As these messages have a destination address that indicates they are not to be bridged, their VLAN ID serves no function, and so can be left at its default value. Depending on the characteristics of the device to which the relay is linked, VLAN ID may have no effect. This setting applies to all of the relay's PTP-capable ports.

The settings in the sub-menu ***PTP PORT <n>*** are now described

PTP PORT <n> FUNCTION

This setting enables or disables the PTP function on the port.

PTP PORT <n> PATH DELAY ADDER

This setting sets the time compensation for the path delay. The time delivered by PTP is advanced by the set time value prior to the time being used to synchronize the relay's real time clock. This is to compensate for time delivery delays not compensated for in the network. In a fully compliant PP network, the peer delay and the processing delay mechanisms compensate for all the delays between the grandmaster and the relay. In such networks, make this setting zero. In networks containing one or more switches and/or clocks that do not implement both of these mechanisms, not all delays are compensated, so the time of message arrival at the relay is later than the time indicated in the message. This setting can be used to approximately compensate for this delay. However, as the relay is not aware of network switching that dynamically changes the amount of uncompensated delay, there is no setting that always and completely corrects for uncompensated delay. A setting can be chosen that reduces the worst-case error to half of the range between minimum and maximum uncompensated delay, if these values are known.

PTP PORT <n> PATH DELAY ASSYMMETRY

This setting corresponds to `delayAsymmetry` in PTP, which is used by the peer delay mechanism to compensate for any difference in the propagation delay between the two directions of a link. Except in unusual cases, the two fibers are of essentially identical length and composition, so make this setting zero. In unusual cases where the length of the link is different in different directions, set this setting to the number of nanoseconds the Ethernet propagation delay to the relay is longer than the mean of path propagation delays to and from the relay. For instance, if it is known say from the physical length of the fibers and the propagation speed in the fibers that the delay from the relay to the Ethernet switch it is connected to is 9000 ns and that the delay from the switch to the relay is 11000 ns, then the mean delay is 10000 ns, and the path delay asymmetry is 11000 - 10000 = +1000 ns.

9.4.6.2 SNTP PROTOCOL

Setting path: ***SETTINGS > PRODUCT SETUP > REAL TIME CLOCK > SNTP PROTOCOL***

■ SNTP PROTOCOL ■	⇔	SNTP FUNCTION: Disabled	Range: Enabled, Disabled
	⇕	SNTP SERVER1 IP ADDR: 127.0.0.1	Range: standard IP address format
	⇕	SNTP SERVER2 IP ADDR: 127.0.0.1	Range: standard IP address format
	⇕	SNTP SERVER1 UDP PORT: 123	Range: 0 to 65535 in steps of 1
	⇑	SNTP SERVER2 UDP PORT: 123	Range: 0 to 65535 in steps of 1

The relay supports the Simple Network Time Protocol specified in RFC-2030. With SNTP, the relay can obtain clock time over an Ethernet network. The relay acts as an SNTP client to receive time values from redundant SNTP/NTP servers, usually a dedicated product using a GPS receiver to provide an accurate time. One or two SNTP servers can be used; use of both servers for redundancy is recommended but not required.

To use SNTP, enable the function and set the IP addresses of ***SNTP SERVER1 IP ADDR*** and ***SNTP SERVER2 IP ADDR***. The relay attempts to obtain time values from server 1. If server 1 is not available the relay tries server 2.

Since many time values are obtained and averaged, it generally takes three to four minutes until the relay clock is closely synchronized with the SNTP/NTP server. It can take up to 20 minutes for the relay to signal an SNTP self-test error if the server is offline, depending on the number and SNTP server modes. Broadcast mode timeout is 10 minutes and unicast timeout is 80 seconds (corresponds to three unicast request retries).

SNTP FUNCTION

Enables or disables the SNTP feature on the relay.

SNTP SERVER1 IP ADDR

This sets the SNTP Server 1 IP address. If SERVER1 SNTP server is set to 127.0.0.1, the relay considers the SERVER1 SNTP server to be not configured. To use SERVER1 SNTP in broadcast mode, set the SNTP SERVER1 IP ADDR setting to "0.0.0.0" The relay SNTP client then listens to SNTP messages sent to the broadcast address for the subnet. The relay waits up to 18 minutes (>1024 seconds) without receiving an SNTP broadcast message before switching to the alternate channel.

SNTP SERVER2 IP ADDR

This sets the SNTP Server 2 IP address. The relay uses this address to contact an SNTP/NTP server if SERVER1 channel fails or is not reachable. The operation of SNTP server is the same as described for SNTP 1 server.

SNTP SERVER1 UDP PORT

This setting is 123 for normal SNTP operation. If SERVER1 SNTP is not required, close the port by changing this setting to zero.

SNTP SERVER2 UDP PORT

This setting is 123 for normal SNTP operation. If SERVER2 SNTP is not required, close the port by changing this setting to zero.

> *Note:*
> *Do not set more than one protocol to the same TCP/UDP port number, as this results in unreliable operation of those protocols.*

> *Note:*
> *If **SERVER1 IP ADDR** and **UDP PORT** settings match the **SERVER2 IP ADDR** and **UDP PORT** settings, the relay considers only the **SERVER1 SNTP** server as being configured and generates an SNTP Failure error message. The failure message also displays when both servers are unavailable.*

9.4.6.3 LOCAL TIME

Setting path: ***SETTINGS > PRODUCT SETUP > REAL TIME CLOCK > LOCAL TIME***

■ LOCAL TIME ■	⇔	LOCAL TIME OFFSET FROM UTC: 0.0 hr	Range: –24.0 to 24.0 hr in steps of 0.5
	⇕	DAYLIGHT SAVINGS TIME: Disabled	Range: Disabled, Enabled
	⇕	DST START MONTH: January	Range: January to December (all months)
	⇕	DST START DAY: Sunday	Range: Sunday to Saturday (all days of the week)
	⇕	DST START DAY INSTANCE: First	Range: First, Second, Third, Fourth, Last
	⇕	DST START HOUR: 2:00	Range: 0:00 to 23:00 in steps of one hour
	⇕	DST STOP MONTH: January	Range: January to December (all months)
	⇕	DST STOP DAY: Sunday	Range: Sunday to Saturday (all days of the week)
	⇕	DST STOP DAY INSTANCE: First	Range: First, Second, Third, Fourth, Last
	⇧	DST STOP HOUR: 2:00	Range: 0:00 to 23:00 in steps of one hour

The relay maintains two times: local time and Universal Coordinated Time (UTC). Local time can be provided by IRIG-B signals. UTC time is provided by SNTP servers.

The real-time clock (RTC) and time stamps reported in historical records and communication protocols may be incorrect if the Local Time settings are not properly configured.

See the IRIG-B section in the Installation chapter for guidance on these settings when using an IRIG-B source that sets the IRIG-B control bits according to IEEE Std 1344-1995.

LOCAL TIME OFFSET FROM UTC

This setting is used to specify the local time zone offset from UTC (Greenwich Mean Time) in hours. Time zones in the eastern hemisphere have positive values; time zones in the western hemisphere have negative values. A value of zero causes the relay to use UTC for local time. This setting has two uses. When the system RTC is synchronized with a communications protocol providing only local time or it is free-running, the offset setting is used to calculate UTC from the local time these provide. When the RTC is synchronized with a communications protocol providing only UTC (such as PTP or SNTP), the time offset setting is used to determine local time from the UTC provided. PTP ALTERNATE_TIME_OFFSET_INDICATOR TLVs are not used to calculate local time.

DAYLIGHT SAVINGS TIME

This setting enables or disables daylight saving time.

DST settings

You use these settings to allow the relay to follow the DST rules of the local time zone. Note that when IRIG-B time synchronization is active, the local time in the IRIG-B signal contains any daylight savings time offset and so the DST settings are ignored.

Note that the following items do not include the DST:

- Time of Day Timer Start Time
- Time of Day Timer Stop Time
- Event Recorder Last Cleared Date
- Source x Demand VAR Maximum Date
- Source x Demand WATT Maximum Date
- Source x Demand VA Maximum Date
- Source x Demand Ia Maximum Date
- Source x Demand Ib Maximum Date
- Source x Demand Ic Maximum Date
- PMU x Last Cleared Date
- PMU One-Shot Time
- Data Logger Newest Time
- Data Logger Oldest Time
- Oscillography Last Cleared Date
- Last Settings Change Date
- User Programmable Fault Report Cleared Date
- Digital Counter x Frozen Time Stamp
- HIZ RMS Capture x Time
- HIZ Capture x Time.

9.4.6.4 PBM PTP

Setting path: ***SETTINGS > PRODUCT SETUP > REAL TIME CLOCK > PBM PTP***

■ PBM PTP ■	⇔	PTP FUNCTION: Disabled	Range: Disabled, Master-Slave, Slave-only
	⇕	PTP PROFILE: Power Utility Profil	Range: Power Utility Profil, Power Profile
	⇕	PTP DOMAIN NUMBER: 93	Range: 0 to 255

⇕	PTP VLAN PRIORITY: 4	Range: 0 to 7
⇕	PTP VLAN ID: 0	Range: 0 to 4094
⇕	PTP MASTER PRIO1: 128	Range: 0 to 255
⇕	PTP MASTER PRIO2: 128	Range: 0 to 255
⇕	■ Port <n>a ■	
⇧	■ Port <n>a ■	

where n = 1 to 4.

A different time source is set for the Process Bus Module. The Process Bus Module supports the Precision Time Protocol (PTP) as PTP master and slave functionality. The PTP state of each port is determined by the PTP settings and grandmaster clock availability on the local network. Time synchronization supports IEEE 1588 PTPv2.

PBM PTP configuration

The relay supports IEEE 1588 PTPv2 as PTP Slave or PTP Master on its Process Bus Module ports. It can be supplied with an external RTC clock from the main CPU ports (station bus ports), the Process Bus Module ports, or both. It utilizes one of the two clocks depending upon the configuration of the synchronization source and PTP function as follows:

To use an external PTP Grand Master clock from the Process Bus Module port (UR acts as PTP Slave only), configure the following settings:

- ***SETTINGS > PRODUCT SETUP > REAL TIME CLOCK > SYNCRONIZING SOURCE*** = `PBM clock`
- ***SETTINGS > PRODUCT SETUP > REAL TIME CLOCK > PBM PTP > PTP FUNCTION*** = `Slave-only`

With this configuration, the relay RTC will use the clock from the Process Bus Module port. For ensuring full functionality of the line current differential element including channel asymmetry compensation, this combination of settings is not recommended. If channel asymmetry is enabled with this combination of settings, the line current differential element is permanently blocked as indicated by the operand 87L DIFF BLOCKED. For the full and proper functionality of the line current differential element, the PTP clock available at Station bus/CPU port should be used as described later in this section.

If the ***SETTINGS > PRODUCT SETUP > REAL TIME CLOCK > SYNCRONIZING SOURCE*** setting is `PBM clock` and the ***SETTINGS > PRODUCT SETUP > REAL TIME CLOCK > PBM PTP > PTP FUNCTION*** setting is disabled, the RTC clock free-runs.

To use an external PTP Grand Master clock from the Process Bus Module port (UR in PTP Slave mode) or to enable the relay as PTP Master on its Process Bus Module ports, configure the following settings:

- ***SETTINGS > PRODUCT SETUP > REAL TIME CLOCK > SYNCRONIZING SOURCE*** = `PBM clock`
- ***SETTINGS > PRODUCT SETUP > REAL TIME CLOCK > PBM PTP > PTP FUNCTION*** = `Master-Slave`

With this configuration, the relay RTC uses the clock from the Process Bus Module port.

To use an external clock through a main CPU port (PTP Slave, IRIG-B, other source) and to enable the relay as PTP Master on its Process Bus Module ports, configure the following settings:

- ***SETTINGS > PRODUCT SETUP > REAL TIME CLOCK > SYNCRONIZING SOURCE*** = `PP/IRIG-B/PTP/Other`, or `IRIG-B/PP/PTP/Other`, or `PP/PTP/IRIG-B/Other`
- ***SETTINGS > PRODUCT SETUP > REAL TIME CLOCK > PBM PTP > PTP FUNCTION*** = `Master-Slave`, or `Slave`, or `Disabled`

With this configuration, the relay RTC uses the clock from the main CPU port.

> *Note:*
> *Some UR applications like oscillography, event recorder, and datalogger use the real-time clock for time-stamping.*

In all of these scenarios, when the Grand Master clock is not available through a CPU port and/or Process Bus Module, all the elements except the Line Current Differential element, remain functional without requiring any external synchronizing source for the relay, as long as all the sampled values subscribed by the relay are synchronized according to the setting defined in ***SETTINGS > PROCESS BUS MODULE > GENERAL > SMPSYNCH CHECK*** and pass the other acceptance criteria.

The settings are as follows:

PTP FUNCTION

This setting sets the source for time synchronization for the Process Bus Module. When disabled, PTP is disabled on all ports of the Process Bus Module. When set to `Master-Slave`, the Process Bus Module acts as a PTP slave when a grandmaster clock is available in the communication path. If no better clock than its own clock is available in the communication path, the module switches to master mode and provides the grandmaster functionality by sending Announce frames and other supporting PTP Master frames.

When set to `Slave-only`, the Process Bus Module acts as a PTP slave ordinary clock if a grandmaster clock is available in the network. If no grandmaster clock is available in the communication path, the module continues to wait for the Announce messages.

When PTP is enabled but no grand master is available on any of the Process Bus Module ports, `PB PTP Failure` events are generated.

To view the synchronizing source, see the setting ***ACTUAL VALUES >PB MODULE > TIME SYNC > SYNC SOURCE***.

PTP PROFILE

This specifies the profile to be used for PTP Master communication. The Power Utility Profile option relates to IEC 61850-9-3, while the Power Profile option relates to IEEE C37.238 2017. When the Process Bus Module PTP is in the slave state, this setting has no effect. As a slave, the Process Bus Module accepts both the Power Profile and the Power Utility Profile.

PTP DOMAIN NUMBER

This sets the PTP domain number. Set this to the domain number of the grandmaster-capable clock(s) to synchronize to. A network can support multiple time distribution domains, each distinguished with a unique domain number. The Power Utility Profile recommends 93 as the value for the domain number.

PTP VLAN PRIORITY

This setting selects the value of the priority field in the 802.1Q VLAN tag in PTP request messages issued by the relay.

PTP VLAN ID

This setting selects the value of the ID field in the 802.1Q VLAN tag in PTP request messages issued by the relay. As these messages have a destination address that indicates they are not to be bridged, their VLAN ID serves no function, and so the setting can be left at its default value. Depending on the characteristics of the device to which the relay is directly linked, VLAN ID can have no effect.

PTP MASTER PRIO1

Priority1 is used in the execution of the best master clock algorithm and lower values take precedence. The operation of the best master clock algorithm selects clocks from a set with a lower value of priority1 over clocks

from a set greater than priority1. The setting values Priority1 and Priority2 decide when the UR Process Bus Module ports are selected as grandmaster clock. In a single LAN, we recommend the following:

- Set ***PTP MASTER PRIO1*** higher than the actual grandmaster, so that the grandmaster(s) takes precedence over the relay
- Set ***PTP MASTER PRIO1*** the same as all the Process Bus Module ports participating in one communication path
- Use ***PTP MASTER PRIO2*** to further prioritize the Process Bus Module ports in the network. The relay with lower value is selected as best master when ***Priority1***, ***clockClass***, ***clockAccuracy***, and ***scaledOffsetLogVariance*** are the same. The setting is editable in the software when the ***PTP FUNCTION*** setting is `Master-Slave`.

PTP MASTER PRIO2

Priority2 is used in the execution of the best master clock algorithm and lower values take precedence. If the operation of the best master clock algorithm fails to order the clocks based on the values of ***priority1***, ***clockClass***, ***clockAccuracy***, and `scaledOffsetLogVariance`, the ***priority2*** attribute allows the creation of up to 256 priorities to further fine-tune the selection of best clocks. If ***Priority2*** is configured the same for two URs in the same communication path, best master clock algorithm uses clockIdentity to resolve the tie-breaker. The setting is editable in the software when the ***PTP FUNCTION*** setting is `Master-Slave`.

> *Note:*
> *Independent of the **NETWORK CONFIG** and **PTP FUNCTION** settings, the enabled transceiver ports on the Process Bus Module operate in stateless transparent clock mode. We recommend always setting the N**ETWORK CONFIG** setting to match with the network topology to avoid unnecessary data storms. For example, if the PRP network has multiple relays connected on a PRP LAN and if the **NETWORK CONFIG** setting is misconfigured to `Independent`, PTP messages other than `PDelay` messages are forwarded between the connected ports, which can create a PTP data storm.*

Sub-menus for ports 1a to 4b

The ***PBM PTP*** menu also has sub-menus for eight different port settings; Port 1a, 1b, 2a, 2b, 3a, 3b, 4a and 4b. Only one is shown here.

■ Port 1a ■	⇔	PATH DELAY ADDER: 0 ns	Range: 0 to 60000 ns in steps of 1
	⇕	PATH DELAY ASYMMETRY: 0 ns	Range: -1000 to +1000 ns in steps of 1

These setting are editable in the software when the ***PTP FUNCTION*** setting is not disabled.

Up to eight ports display here, depending on the Process Bus Module.

Default port assignments for the Process Bus Module are as follows:

- Parallel Redundancy Protocol (PRP) — Ports 1a and 1b are enabled
- High-Availability Seamless Redundancy (HSR) — Ports 1a and 1b are enabled
- Dual HSR — Ports 1a and 1b support HSR-1, and ports 3a and 3b support HSR-2
- INDEPENDENT — Ports 1a to 4b are enabled

Port availability by order code is as follows:

- 85 — Ports 1a and 1b, or 3a and 3b
- 86 — All eight ports
- 87 — All eight ports

For the following two settings, there is no dependency on the ***NETWORK CONFIG*** setting. For order code 85, ports 1a, 1b, 3a, and 3b settings are available. For order codes 86 and 87, all the port settings are available. Configure

these settings as per your network. For example, for order code 85, while ports 1a, 1b, 3a, and 3b settings display, configure ports 1a and 1b when your network uses these two ports.

PATH DELAY ADDER

This setting sets the time compensation for the path delay. The time delivered by PTP is advanced by the set time value prior to the time being used to synchronize the relay's real time clock. This is to compensate for time delivery delays not compensated for in the network. In a fully compliant PP network, the peer delay and the processing delay mechanisms compensate for all the delays between the grandmaster and the relay. In such networks, make this setting zero. In networks containing one or more switches and/or clocks that do not implement both of these mechanisms, not all delays are compensated, so the time of message arrival at the relay is later than the time indicated in the message. This setting can be used to approximately compensate for this delay. However, as the relay is not aware of network switching that dynamically changes the amount of uncompensated delay, there is no setting that always and completely corrects for uncompensated delay. A setting can be chosen that reduces the worst-case error to half of the range between minimum and maximum uncompensated delay, if these values are known.

Restart the relay after changing this setting, for example using **Maintenance > Reboot Relay**.

PATH DELAY ASYMMETRY

This setting corresponds to `delayAsymmetry` in PTP, which is used by the peer delay mechanism to compensate for any difference in the propagation delay between the two directions of a link. Except in unusual cases, the two fibers are of essentially identical length and composition, so make this setting zero. In unusual cases where the length of the link is different in different directions, set this setting to the number of nanoseconds the Ethernet propagation delay to the relay is longer than the mean of path propagation delays to and from the relay. For instance, if it is known say from the physical length of the fibers and the propagation speed in the fibers that the delay from the relay to the Ethernet switch it is connected to is 9000 ns and that the delay from the switch to the relay is 11000 ns, then the mean delay is 10000 ns, and the path delay asymmetry is 11000 - 10000 = +1000 ns.

9.4.6.5 IRIG-B

Setting path: SETTINGS > PRODUCT SETUP > REAL TIME CLOCK > IRIG-B

■ IRIG-B ■	⇔	IRIG B SIGNAL TYPE: None	Range: None, DC Shift, Amplitude Modulated
	⇧	UTC OFFSET USE: LOCAL TIME SETTINGS	Range: Local Time settings, IRIG-B Time

IRIG B SIGNAL TYPE

This setting enables IRIG B synchronization. The input IRIG B signal type must be set to DC Shift or Amplitude Modulated using the ***Settings > Product Setup > Real Time Clock > IRIG-B > IRIG B Signal Type*** setting. IRIG B synchronization may be disabled by making this setting None.

UTC OFFSET

This setting defines how the Local Time is derived from the IRIG-B time.

When set to `LOCAL TIME SETTINGS`, the time offset code in the IRIG control bits is used as follows (to ensure backward compatibility for Firmware versions prior to 8.6):

UTC_Time = IRIG-B_Time – Time_Offset (IRIG-B CF bits, including the DST)

Use the following equation to get local time:

Local_Time = UTC_Time + LOCAL TIME OFFSET FROM UTC(setting under REAL TIME CLOCK/ LOCAL TIME menu)

Finally, the DST time is determined by the Relay DST setting.

When set to `IRIG-B TIME`, the relay derives UTC time and Local Time from IRIG-B time itself and doesn't need relay ***LOCAL TIME*** settings.

UTC_Time = IRIG-B_Time – Time_Offest (IRIG-B CF bits, including the DST)

Local_Time = IRIG-B_Time

9.4.7 FAULT REPORTS

Setting path: ***SETTINGS > PRODUCT SETUP > FAULT REPORT <n>***

■ FAULT REPORT 1 ■	⇔	FAULT REPORT 1 SOURCE: SRC <n> — Range: SRC <n>
	⇕	FAULT REPORT 1 TRIG: Off — Range: FlexLogic operand
	⇕	FAULT REPORT 1 Z1 MAG: 3.00 Ω — Range: 0.01 to 250.00 ohms in steps of 0.01
	⇕	FAULT REPORT 1 Z1 ANGLE: 75° — Range: 25 to 90° in steps of 1
	⇕	FAULT REPORT 1 Z0 MAG: 9.00 Ω — Range: 0.01 to 650.00 ohms in steps of 0.01
	⇕	FAULT REPORT 1 Z0 ANGLE: 75° — Range: 25 to 90° in steps of 1
	⇕	FAULT REPORT 1 Z0M MAG: 0.00 Ω — Range: 0.00 to 650.00 ohms in steps of 0.01
	⇕	FAULT REPORT 1 Z0M ANGLE: 75° — Range: 25 to 90° in steps of 1
	⇕	FAULT REPORT 1 LINE LENGTH UNITS: km — Range: km, miles
	⇕	FAULT REP 1 LENGTH (km): 100.0 — Range: 0.0 to 2000.0 in steps of 0.1
	⇕	FAULT REPORT 1 VT SUBSTITUTION: None — Range: None, I0, V0
	⇕	FAULT REP 1 SYSTEM Z0 MAG: 2.00 Ω — Range: 0.01 to 650.00 ohms in steps of 0.01
	⇕	FAULT REP 1 SYSTEM Z0 ANGLE: 75° — Range: 25 to 90° in steps of 1
	⇑	FAULT REPORT 1 Z0M MAG: 0.00 Ω — Range: 0.00 to 650.00 ohms in steps of 0.01

The relay supports one fault report and an associated fault locator per CT bank. The signal source and trigger condition, as well as the characteristics of the line or feeder, are entered in this menu.

The fault report stores data, in non-volatile memory, pertinent to an event when triggered. The captured data contained in the `FaultReport.txt` file includes:

- Fault report number
- Name of the relay, programmed by the user
- Firmware revision of the relay
- Date and time of trigger
- Name of trigger (specific operand)
- Line or feeder ID via the name of a configured signal source

- Active setting group at the time of trigger
- Pre-fault current and voltage phasors (two cycles before either a 50DD disturbance associated with fault report source or the trigger operate). Once a disturbance is detected, pre-fault phasors hold for three seconds waiting for the fault report trigger. If trigger does not occur within this time, the values are cleared to prepare for the next disturbance.
- Fault current and voltage phasors (one cycle after the trigger)
- Elements operated at the time of triggering
- Events — Nine before trigger and seven after trigger (only available via the relay web page)
- Fault duration times for each breaker (created by the breaker arcing current feature)

The captured data also includes the fault type, the distance to the fault location, the fault loop impedance, as well as the reclose shot number (when applicable). To include fault duration times in the fault report, enable and configure the breaker arcing current feature for each of the breakers. Fault duration is reported on a per-phase basis.

The relay allows locating faults, including ground faults, from delta-connected VTs. In this case, the missing zero-sequence voltage is substituted either by the externally provided neutral voltage (broken delta VT) connected to the auxiliary voltage channel of a VT bank, or by the zero-sequence voltage approximated as a voltage drop developed by the zero-sequence current, and user-provided zero-sequence equivalent impedance of the system behind the relay.

The trigger can be any FlexLogic operand, but in most applications it is expected to be the same operand, usually a virtual output, that is used to drive an output relay to trip a breaker. To prevent the overwriting of fault events, do not use the disturbance detector to trigger a fault report. A `FAULT RPT TRIG` event is automatically created when the report is triggered.

If a number of protection elements are OR'd together to create a fault report trigger, the first operation of any element causing the OR gate output to become high triggers a fault report. However, If other elements operate during the fault and the first operated element has not been reset (the OR gate output is still high), the fault report is not triggered again. Considering the reset time of protection elements, there is very little chance that a fault report can be triggered twice in this manner. As the fault report must capture a usable amount of pre and post-fault data, it cannot be triggered faster than every 20 ms.

Each fault report is stored as a file; the relay capacity is 15 files. A 16th trigger overwrites the oldest file.

Individual fault report features store their files in the same memory space. The sixteenth report overwrites the first one regardless of which fault report feature produced the sixteenth and the first records.

The EnerVista software is required to view all captured data. The relay faceplate display can be used to view the date and time of trigger, the fault type, the distance location of the fault, and the reclose shot number.

FAULT REPORT <n> SOURCE

This setting selects the source for input currents and voltages and disturbance detection. For the application of entirely parallel lines, the fault report can be programmed to apply compensation for the zero sequence mutual coupling between parallel lines when calculating fault resistance and fault loop impedance. If this compensation is required, the ground current (3I_0) from the parallel line must be connected to the ground input CT of the CT bank configured under the ***FAULT REPORT 1 SOURCE*** with the same polarity as the phase current input configured in the same source.

FAULT REPORT <n> TRIG

This setting assigns the FlexLogic operand representing the protection element/elements requiring operational fault location calculations. The distance to fault calculations are initiated by this signal.

FAULT REPORT <n> Z1 MAG, FAULT REPORT <n> Z0 MAG and FAULT REPORT <n> Z0M MAG

The Z1, Z0 and Z0M impedance vectors are entered in secondary ohms.

FAULT REPORT <n> Z1 ANGLE, FAULT REPORT <n> Z0 ANGLE and FAULT REPORT ANGLE <n> Z0M

The Z1, Z0 and Z0M impedance angles are entered in degrees.

FAULT REPORT <N> LINE

Here you enter the distance measurement unit to miles or kilometers.

FAULT REP <N> LENGTH

Here you enter the length of the line

FAULT REPORT 1 VT SUBSTITUTION

This setting is set to `None` if the relay is fed from wye-connected VTs. If delta-connected VTs are used, and the relay is supplied with the neutral (3V0) voltage, this setting is set to `V0`. The method is still exact, as the fault locator combines the line-to-line voltage measurements with the neutral voltage measurement to re-create the line-to-ground voltages. It is required to configure the delta and neutral voltages under the source indicated as input for the fault report. Also, the relay checks if the auxiliary signal configured is marked as `Vn` by the user (under VT setup) and inhibits the fault location if the auxiliary signal is labeled differently.

If the broken-delta neutral voltage is not available to the relay, an approximation is possible by assuming the missing zero sequence voltage to be an inverted voltage drop produced by the zero-sequence current and the user-specified equivalent zero-sequence system impedance behind the relay: $V0 = -Z0 \times I0$. In order to enable this mode of operation, the ***FAULT REPORT 1 VT SUBSTITUTION*** setting is set to `I0`.

SYSTEM magnitude and angle settings

The ***FAULT REP 1 SYSTEM Z0 MAG*** and ***FAULT REP 1 SYSTEM Z0 ANGLE*** settings are used only when the ***VT SUBSTITUTION*** setting value is `I0`. The magnitude is to be entered in secondary ohms. This impedance is an average system equivalent behind the relay. It can be calculated as zero-sequence Thevenin impedance at the local bus with the protected line/feeder disconnected. The method is accurate only if this setting matches perfectly the actual system impedance during the fault.

If the system exhibits too much variability, this approach is questionable and the fault location results for single-line-to-ground faults is trusted accordingly. Keep in mind that grounding points in the vicinity of the installation impact the system zero-sequence impedance (grounded loads, reactors, zig-zag transformers, shunt capacitor banks, and so on).

9.4.8 OSCILLOGRAPHY

Setting path: ***SETTINGS > PRODUCT SETUP > OSCILLOGRAPHY***

■ OSCILLOGRAPHY ■	⇔	NUMBER OF RECORDS: <n>	Range: 3 to 64 in steps of 1
	⇕	TRIGGER MODE: Automatic Overwrite	Range: Automatic Overwrite, Protected
	⇕	TRIGGER POSITION: 50%	Range: 0 to 100% in steps of 1
	⇕	TRIGGER SOURCE: Off	Range: FlexLogic operand
	⇕	AC INPUT WAVEFORMS: 64 samples/cycle	Range: Off, 8, 16, 32, 64 samples/cycle
	⇕	■ DIGITAL CHANNELS ■	
	⇧	■ ANALOG CHANNELS ■	

Oscillography records contain waveforms captured at the sampling rate as well as other relay data at the point of trigger. Oscillography records are triggered by a programmable FlexLogic operand. Multiple oscillography records can be captured simultaneously.

To retrieve an Oscillography record from a relay:

1. If not yet set up for oscillography, configure settings under **Settings > Product Setup > Oscillography** in the EnerVista software.
2. Access **Actual Values > Records > Oscillography** in the EnerVista software.
3. In the window that opens, select the record number. The highest number is the most recent record (Newest Record Number).
4. Click the **Read** button to get the waveform. When available, waveforms are displayed graphically, and otherwise error messages display.
5. In the waveform window that opens, you can save the file, for example with the CFG extension.

When EnerVista UR Setup creates a new settings file, a Smart defaults feature automatically enters a basic oscillography configuration. The basic configuration changes the factory default values to make the number of samples per cycle 32, adds a selection of digital and analog channels that are often of interest, and adds a FlexLogic equation to trigger oscillography. Review and update this basic configuration as required for the application at hand.

NUMBER OF RECORDS

The number of records is selectable, but the number of cycles captured in a single record varies considerably based on other factors, such as sample rate and the number of operational modules. There is a fixed amount of data storage for oscillography; the more data captured, the less the number of cycles captured per record. See the ***ACTUAL VALUES > RECORDS > OSCILLOGRAPHY*** menu to view the number of cycles captured per record. The following table provides sample configurations with corresponding cycles/record. The minimum number of oscillographic records is three.

Records	CT/VTs	Sample rate	Digital channels	Analog channels	Cycles per record
3	1	32	32	16	2399
3	1	64	32	16	1450
16	1	32	32	16	666
16	1	64	32	16	402
32	1	32	32	16	352
32	1	64	32	16	213
3	2	32	32	16	1516
3	2	64	32	16	851
16	2	32	32	16	421

TRIGGER MODE

A new record automatically overwrites an older record when ***TRIGGER MODE*** is set to `Automatic Overwrite`. This keeps the number of available records equal to the ***NUMBER OF RECORDS*** setting value. When ***TRIGGER***

MODE is set to `Protected`, new records stop being captured once the number of captured records becomes equal to the ***NUMBER OF RECORDS*** value.

TRIGGER POSITION

Set this to a percentage of the total buffer size (for example, 10%, 50%, 75%, and so on). A trigger position of 25% consists of 25% pre- and 75% post-trigger data.

TRIGGER SOURCE

Always captured in oscillography and can be any FlexLogic parameter (element state, contact input, virtual output, and so on). The relay sampling rate is 64 samples per cycle.

AC INPUT WAVEFORMS

Determines the sampling rate at which AC input signals (that is, current and voltage) are stored. Reducing the sampling rate allows longer records to be stored. This setting has no effect on the internal sampling rate of the relay, which is always 64 samples per cycle. That is, it has no effect on the fundamental calculations of the device.

For products with the 9-2LE hardware and software options, this setting is fixed at 64 samples/cycle.

> *Note:*
> *When changes are made to the oscillography settings, all existing oscillography records are cleared*

9.4.8.1 DIGITAL CHANNELS

■ DIGITAL Channels ■	⇔	Digital CHANNEL <n> Off	Range: FlexLogic operand

DIGITAL CHANNEL <n>

These settings select the FlexLogic operand state recorded in an oscillography trace. The length of each oscillography trace depends in part on the number of parameters selected here. Parameters set to `Off` are ignored. There are 127 channels and one trigger, for a total of 128.

To populate quickly the rows in the Offline Window, use Ctrl C/V to copy/paste, or click then double-click a row to display a quick selection window

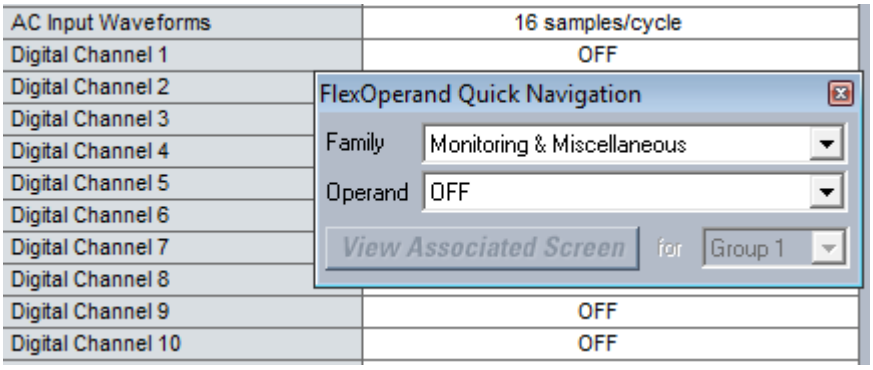

Figure 214: Quick selection window

9.4.8.2 ANALOG CHANNELS

■ DIGITAL Channels ■	⇔	Digital CHANNEL <n> Off	Range: Off, any FlexAnalog/actual value parameter See Appendix for list

where n = 1 to 32

ANALOG CHANNEL <n>

These settings select the metering actual value recorded in an oscillography trace. The length of each oscillography trace depends in part on the number of parameters selected here. Parameters set to `Off` are ignored. The parameters available in a given relay depend on

- the type of relay,
- the type and number of CT/VT hardware modules installed, and
- the type and number of analog input hardware modules installed

A list of all possible analog metering actual value parameters is presented in Appendix A: FlexAnalog Parameters. All eight CT/VT module channels are stored in the oscillography file. The CT/VT module channels are named as follows:

<slot_letter><terminal_number>—<I or V><phase A, B, or C, or 4th input>

The fourth current input in a bank is called IG, and the fourth voltage input in a bank is called VX. For example, F2-IB designates the IB signal on terminal 2 of the CT/VT module in slot F.

If there are no CT/VT modules and analog input modules, no analog traces appear in the file; only the digital traces appear.

> *Note:*
> *In addition to the standard COMTRADE files *.hdr, *cfg & *.dat, a file with extension '*.set' is also recorded. This file contains the active settings of the protection and control elements of the relay upon triggering of the oscillography file. The '*.set' can be opened in Enervista. The setting names are captured in English language only.*

9.4.9 DATA LOGGER

Setting path: ***SETTINGS > PRODUCT SETUP > DATA LOGGER***

■ DATA LOGGER ■	⇔	DATA LOGGER MODE: Continuous	Range: Continuous, Trigger
	⇕	DATA LOGGER TRIGGER: Off	Range: FlexLogic operand
	⇕	DATA LOGGER RATE: 60000 msec	Range: 15 to 3600000 ms in steps of 1
	⇕	DATA LOGGER CHNL <N>: Off	Range: Off, any FlexAnalog/actual value parameter See Appendix A for list
	⇧	DATA LOGGER CONFIG: 0 CHNL x 0.0 DAYS	Range: Not applicable - shows computed data only

where n = 1 to 16

The data logger samples and records up to 16 analog parameters at a user-defined sampling rate. This recorded data can be downloaded to EnerVista UR Setup and displayed with parameters on the vertical axis and time on the horizontal axis. All data is stored in non-volatile memory, so the information is retained when power to the relay is lost. For a fixed sampling rate, the data logger can be configured with a few channels over a long period or a larger number of channels for a shorter period. The relay automatically partitions the available memory between the channels in use. The following table outlines examples of storage capacities for a system frequency of 60 Hz.

Data logger storage capacity example

Sampling rate	Channels	Days	Storage capacity
15 ms	1	0.1	482 s
	8	0.1	60 s
	9	0.1	54 s
	16	0.1	30 s
1,000 ms	1	0.3	32729 s
	8	0.1	4091 s
	9	0.1	3637 s
	16	0.1	2046 s
60,000 ms	1	22.7	1963710 s
	8	2.8	245460 s
	9	2.5	218190 s
	16	1.4	127230 s
3,600,000 ms	1	1362.1	117822600 s
	8	170.2	14727600 s
	9	151.3	13091400 s

Note:
Changing any setting affecting data logger operation clears data in the log

DATA LOGGER MODE

This setting configures the mode in which the data logger operates. When set to `Continuous`, the data logger actively records any configured channels at the rate as defined by the ***DATA LOGGER RATE***. The data logger is idle in this mode when no channels are configured. When set to `Trigger`, the data logger records any configured channels at the instance of the rising edge of the DATA LOGGER TRIGGER source FlexLogic operand. The data logger ignores all subsequent triggers and continues to record data until the active record is full. Once the data logger is full, a ***CLEAR DATA LOGGER*** command is required to clear the data logger record before a new record can be started. Performing the ***CLEAR DATA LOGGER*** command also stops the current record and resets the data logger to be ready for the next trigger.

DATA LOGGER TRIGGER

This setting selects the signal used to trigger the start of a new data logger record. Any FlexLogic operand can be used as the trigger source. This setting only applies when the mode is set to `Trigger`.

DATA LOGGER RATE

This setting selects the time interval at which the actual value data is recorded.

DATA LOGGER CHNL <n>

These settings select the metering actual value that is to be recorded in Channel <n> of the data log. The parameters available in a given relay are dependent on: the type of relay, the type and number of CT/VT hardware modules installed, and the type and number of Analog Input hardware modules installed. Upon startup, the relay automatically prepares the parameter list. A list of all possible analog metering actual value parameters is shown in the FlexAnalog appendix.

DATA LOGGER CONFIG

This display presents the total amount of time that the Data Logger can record the channels not selected to `Off` without overwriting old data.

9.4.10 DEMAND

Setting path: *SETTINGS > PRODUCT SETUP > DEMAND*

■ DEMAND ■	⇔	CRNT DEMAND METHOD: Thermal Exponential	Range: Thermal Exponential, Block Interval, Rolling Demand
	⇕	POWER DEMAND METHOD: Thermal Exponential	Range: Thermal Exponential, Block Interval, Rolling Demand
	⇕	DEMAND INTERVAL: 15 MIN	Range: 5, 10, 15, 20, 30, 60 minutes
	⇧	DEMAND TRIGGER: Off	Range: FlexLogic operand Note: for calculation using method 2a

The relay measures current demand on each phase, and three-phase demand for real, reactive, and apparent power. Current and Power methods can be chosen separately. Settings are provided to allow you to emulate common electrical utility demand measuring techniques, for statistical or control purposes.

CRNT DEMAND METHOD

Here you can set the calculation method for the current demand

POWER DEMAND METHOD

Here you can set the calculation method for the power demand

DEMAND INTERVAL

Use this setting to set the required demand interval

DEMAND TRIGGER

Use this setting to define whether a demand trigger is required or not. If the demand trigger is On, a variation of the Block interval method is used as described later.

The relay can be set to calculate demand by any of the following methods.

- Thermal exponential
- Block Interval
- Rolling demand

These are described in the following sections

9.4.10.1 THERMAL EXPONENTIAL CALCULATION METHOD

This method emulates the action of an analog peak-recording thermal demand meter. The relay measures the quantity (RMS current, real power, reactive power, or apparent power) on each phase every second and assumes

that the circuit quantity remains at this value until updated by the next measurement. It calculates the 'thermal demand equivalent' based on the following equation:

$$d(t) = D(1 - e^{-kt})$$

where:

- d = demand value after applying input quantity for time t (in minutes)
- D = input quantity (constant)
- k = 2.3 / thermal 90% response time

The figure shows the 90% thermal response time characteristic of 15 minutes. A setpoint establishes the time to reach 90% of a steady-state value, just as the response time of an analog instrument. A steady state value applied for twice the response time indicates 99% of the value.

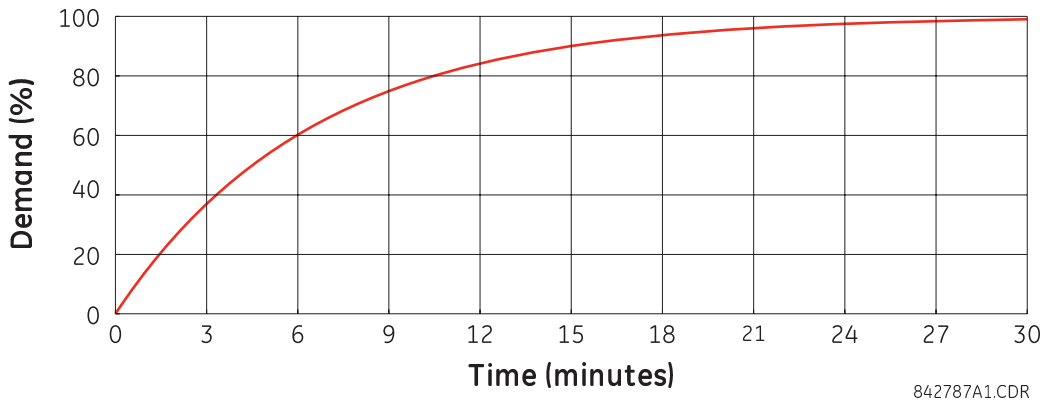

Figure 215: Thermal demand characteristic

9.4.10.2 BLOCK INTERVAL CALCULATION METHOD

There are two Block Interval calculation methods as follows:

If ***CRNT DEMAND METHOD*** is set to `Block Interval` and ***DEMAND TRIGGER*** is set to `Off`, method 1 is used as follows.

If ***DEMAND TRIGGER*** is assigned to any other FlexLogic operand, Method 2 is used as follows.

1) Block interval calculation method without demand trigger

This method calculates a linear average of the quantity (RMS current, real power, reactive power, or apparent power) over the programmed demand time interval, starting daily at 00:00:00 (that is, 12:00 am). The 1440 minutes per day is divided into the number of blocks as set by the programmed time interval. Each new value of demand becomes available at the end of each time interval.

2) Block Interval calculation method with demand trigger

This method calculates a linear average of the quantity (RMS current, real power, reactive power, or apparent power) over the interval between successive Start Demand Interval logic input pulses. Each new value of demand becomes available at the end of each pulse. Assign a FlexLogic operand to the DEMAND TRIGGER setting to program the input for the new demand interval pulses.

> *Note:*
> *If a trigger is assigned, the maximum allowed time between two trigger signals is 60 minutes. If no trigger signal appears within 60 minutes, demand calculations are performed and available, and the algorithm resets and starts the new cycle of calculations. The minimum required time for trigger contact closure is 20 µs.*

9.4.10.3 ROLLING DEMAND CALCULATION METHOD

This method calculates a linear average of the quantity (RMS current, real power, reactive power, or apparent power) over the programmed demand time interval, in the same way as Block Interval. The value is updated every minute and indicates the demand over the time interval just preceding the time of update.

9.4.11 USER-PROGRAMMABLE LEDS

Basic and Enhanced front panels

Setting path: ***SETTINGS > PRODUCT SETUP > USER-PROGRAMMABLE LEDS***

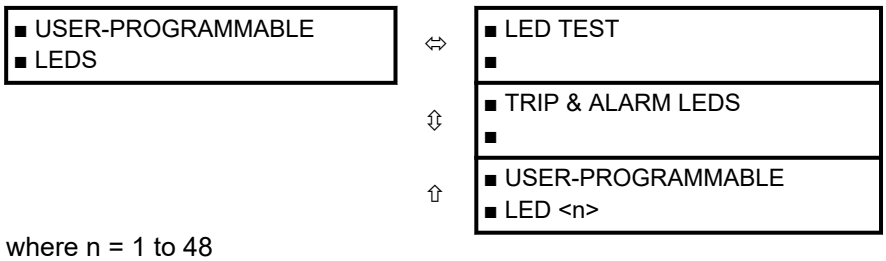

where n = 1 to 48

Graphical front panel

Setting path: ***SETTINGS > PRODUCT SETUP > USER-PROGRAMMABLE LEDS***

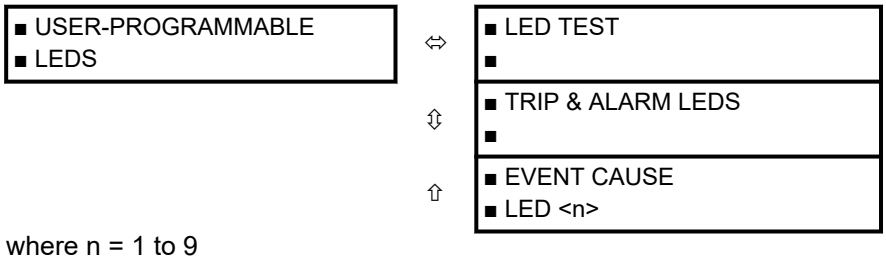

where n = 1 to 9

The LEDs can be customized to illuminate when a selected FlexLogic operand is in the logic 1 state. The trip and alarm LEDs can also be customized in a similar manner. To ensure correct functionality of all LEDs, an LED test feature is also provided.

9.4.11.1 LED TEST

Setting path: ***SETTINGS > PRODUCT SETUP > USER-PROGRAMMABLE LEDS > LED TEST***

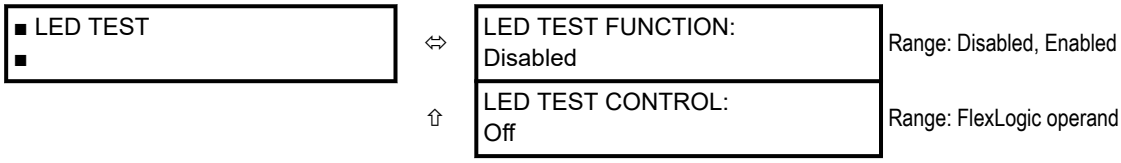

When enabled, the LED test can be initiated from any digital input or user-programmable condition, such as a user-programmable pushbutton. The control operand is configured under the ***LED TEST CONTROL*** setting. The test covers all LEDs, including the LEDs of the optional user-programmable pushbuttons. For the enhanced and basic front panels, the test consists of the following three stages:

1. All 62 LEDs on the relay are illuminated. This is a quick test to verify if any of the LEDs is faulty. This stage lasts as long as the control input is on, up to a maximum of one minute. After one minute, the test ends.
2. All the LEDs are turned off, and then one LED at a time turns on for one second, then back off. The test routine starts at the top left panel, moving from the top to bottom of each LED column. This test checks for

hardware failures that lead to more than one LED being turned on from a single logic point. This stage can be interrupted at any time.

3. All the LEDs are turned on. One LED at a time turns off for one second, then back on. The test routine starts at the top left panel moving from top to bottom of each column of the LEDs. This test checks for hardware failures that lead to more than one LED being turned off from a single logic point. This stage can be interrupted at any time.

For the graphical front panel, the test consists of the following stages:

1. All 22 LEDs on the relay are illuminated. This is a quick test to verify if any of the LEDs is faulty. This stage lasts as long as the control input is on, up to a maximum of one minute. After one minute, the test ends.
2. All the LEDs are turned off, and then one LED at a time turns on with the orange color for one second, then back off. The test routine starts at the top left panel, moving from the top to bottom for all 14 LEDs. Then the eight pushbutton LEDs are tested in the same manner. This test checks for hardware failures that lead to more than one LED being turned on from a single logic point. This stage can be interrupted at any time.
3. All the LEDs are turned on with the orange color. One LED at a time turns off for one second, then back on. The test routine starts at the top left panel moving from top to bottom for all 14 LEDs. Then the eight pushbutton LEDs are tested in the same manner. This test checks for hardware failures that lead to more than one LED being turned off from a single logic point. This stage can be interrupted at any time.
4. Additionally, stages 2 and 3 are repeated twice for the five device status LEDs and nine event cause LEDs, one time with green color on and the other with red color on.

When testing is in progress, the LEDs are controlled by the test sequence, rather than the protection, control, and monitoring features. However, the LED control mechanism accepts all the changes to LED states generated by the relay and stores the actual LED states (on or off) in memory. When the test completes, the LEDs reflect the actual state resulting from relay response during testing. The reset pushbutton does not clear any targets when the LED Test is in progress.

A dedicated FlexLogic operand, LED TEST IN PROGRESS, is set for the duration of the test. When the test sequence is initiated, the ***LED TEST INITIATED*** event is stored in the event recorder.

The entire test procedure is user-controlled. In particular, stage 1 can last as long as necessary, and stages 2 and 3 can be interrupted. The test responds to the position and rising edges of the control input defined by the LED TEST CONTROL setting. The control pulses must last at least 250 ms to take effect. The following diagram explains how the test is executed.

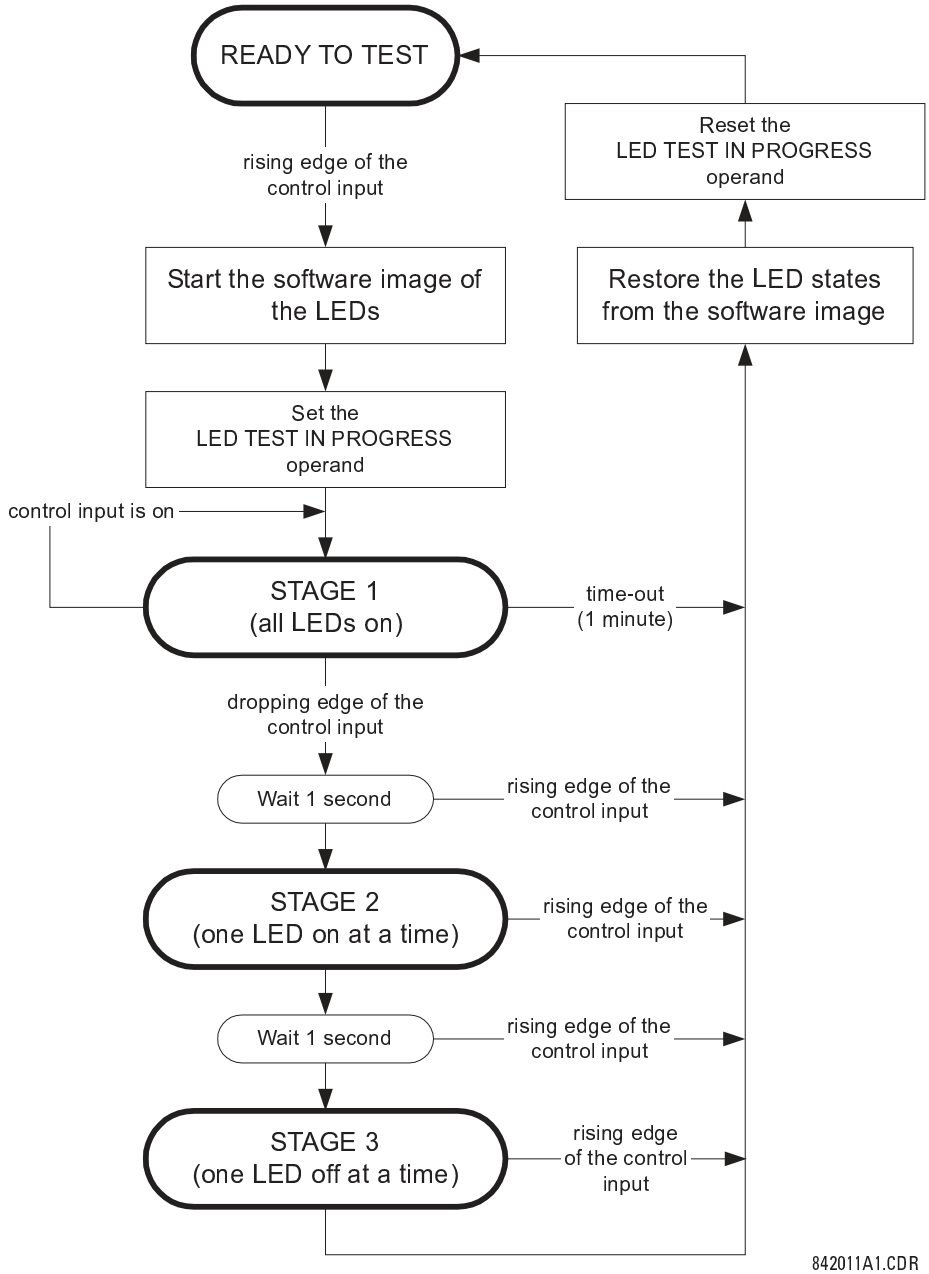

Figure 216: LED test sequence

Application example 1

Assume one needs to check if any of the LEDs is faulty through user-programmable pushbutton 1. Apply the following settings.

Configure user-programmable pushbutton 1 by making the following entries in the ***SETTINGS > PRODUCT SETUP > USER-PROGRAMMABLE PUSHBUTTONS > USER PUSHBUTTON 1*** menu. (The option does not display when not purchased.)

- ***PUSHBUTTON 1 FUNCTION***: `Self-reset`
- ***PUSHBTN 1 DROP-OUT TIME***: `0.10 s`

Configure the LED test to recognize user-programmable pushbutton 1 by making the following entries in the ***SETTINGS > PRODUCT SETUP > USER-PROGRAMMABLE LEDS > LED TES***T menu:

- ***LED TEST FUNCTION***: `Enabled`
- ***LED TEST CONTROL***: `PUSHBUTTON 1 ON`

The test is initiated when the user-programmable pushbutton 1 is pressed. Keep the pushbutton pressed for as long as the LEDs are being visually inspected. When finished, release the pushbutton. The relay then automatically starts stage 2. At this point, test can be canceled by pressing the pushbutton.

Application example 2

Assume you need to check whether any LEDs are faulty as well as check one LED at a time to check for other failures. This is to be performed via user-programmable pushbutton 1.

After applying the settings in application example 1, hold down the pushbutton as long as necessary to test all LEDs. When finished, release the pushbutton so that the relay then automatically starts stage 2. When stage 2 is completed, stage 3 starts automatically. The test can be canceled at any time by pressing the pushbutton.

9.4.11.2 TRIP AND ALARM LEDS

Setting path: ***SETTINGS > PRODUCT SETUP > USER-PROGRAMMABLE LEDS > TRIP & ALARMS LEDS***

■ TRIP & ALARM LEDS ■	⇔	TRIP LED INPUT: Off	Range: FlexLogic operand
	⇧	ALARM LED INPUT: Off	Range: FlexLogic operand

The trip and alarm LEDs are in the first LED column (enhanced and graphical front panels) and on LED panel 1 (basic front panel). Each LED can be programmed to turn on when the selected FlexLogic operand is in the logic 1 state.

9.4.11.3 USER-PROGRAMMABLE LED <N>

Setting path: ***SETTINGS > PRODUCT SETUP > USER-PROGRAMMABLE LEDS > USER-PROGRAMMABLE LED <n>***

■ USER-PROGRAMMABLE ■ LED <n>	⇔	LED <n> OPERAND: Off	Range: FlexLogic operand
	⇧	LED <n> TYPE: Self-Reset	Range: FlexLogic operand

where n = 1 to 48

For the enhanced and basic front panels, there are 48 amber LEDs across the relay LED panels. Each of these indicators can be programmed to illuminate when the selected FlexLogic operand is in the logic 1 state.

For the basic front panel, the LEDs are located as follows:

- LED Panel 2 — User-programmable LEDs 1 through 24
- LED Panel 3 — User programmable LEDs 25 through 48

For the enhanced front panel, the LEDs are located as follows:

- LED column 2 — User-programmable LEDs 1 through 12
- LED column 3 — User-programmable LEDs 13 through 24
- LED column 4 — User-programmable LEDs 25 through 36
- LED column 5 — User-programmable LEDs 37 through 48

See the LED Indicators section in chapter 4 for information on the location of these indexed LEDs.

The user-programmable LED settings select the FlexLogic operands that control the LEDs. If the ***LED <n> TYPE*** setting is `Self-Reset` (the default setting), the LED illumination tracks the state of the selected LED operand. If the ***LED <n> TYPE*** setting is `Latched`, the LED, once lit, remains so until reset by the front panel **RESET** button, from a remote device via a communications channel, or from any programmed operand, even if the LED operand state de-asserts.

9.4.11.3.1 RECOMMENDED SETTINGS FOR USER-PROGRAMMABLE LEDS

Setting	Parameter
LED 1 operand	SETTING GROUP ACT 1
LED 2 operand	SETTING GROUP ACT 2
LED 3 operand	SETTING GROUP ACT 3
LED 4 operand	SETTING GROUP ACT 4
LED 5 operand	SETTING GROUP ACT 5
LED 6 operand	SETTING GROUP ACT 6
LED 7 operand	Off
LED 8 operand	Off
LED 9 operand	BREAKER 1 OPEN
LED 10 operand	BREAKER 1 CLOSED
LED 11 operand	BREAKER 1 TROUBLE
LED 12 operand	Off
LED 13 operand	Off
LED 14 operand	BREAKER 2 OPEN
LED 15 operand	BREAKER 2 CLOSED
LED 16 operand	BREAKER 2 TROUBLE
LED 17 operand	SYNC 1 SYNC OP
LED 18 operand	SYNC 2 SYNC OP
LED 19 operand	Off
LED 20 operand	Off
LED 21 operand	AR ENABLED
LED 22 operand	AR DISABLED
LED 23 operand	AR RIP
LED 24 operand	AR LO

9.4.11.4 EVENT CAUSE LED <N>

Setting path: ***SETTINGS > PRODUCT SETUP > USER-PROGRAMMABLE LEDS > EVENT CAUSE LED <n>***

■ EVENT CAUSE ■ LED <n>	⇔	LED <n> OPERAND: LED PICKUP	Range: FlexLogic operand
	⇕	LED 1 COLOR: Green	Range: Red, Green, Orange
	⇧	LED 1 TYPE: Self-Reset	Range: Self-Reset, Latched

where n = 1 to 9

For the graphical front panel, the event cause LED settings select the FlexLogic operands that control the LEDs.

LED <n> TYPE

If set to `Self-Reset`, the LED illumination tracks the state of the selected LED operand. If set to `Latched`, the LED, once lit, remains so even the LED operand state already de-asserts, until reset by the front panel RESET button, from a remote device via a communications channel, or from any programmed operand.

The table outlines default input operand and output operands for each event cause LED.

Default input and output operand for event cause LEDs

LED	Default input operand	Output operand	Default color
Event Cause LED 1	LED PICKUP	EVENT CAUSE LED 1	Green
Event Cause LED 2	LED VOLTAGE	EVENT CAUSE LED 2	Orange
Event Cause LED 3	LED CURRENT	EVENT CAUSE LED 3	Orange
Event Cause LED 4	LED FREQUENCY	EVENT CAUSE LED 4	Orange
Event Cause LED 5	LED OTHER	EVENT CAUSE LED 5	Orange
Event Cause LED 6	LED PHASE A	EVENT CAUSE LED 6	Orange
Event Cause LED 7	LED PHASE B	EVENT CAUSE LED 7	Orange
Event Cause LED 8	LED PHASE C	EVENT CAUSE LED 8	Orange
Event Cause LED 9	LED NEUTRAL/GROUND	EVENT CAUSE LED 9	Orange

9.4.12 USER-PROGRAMMABLE SELF-TESTS

Setting path: ***SETTINGS > PRODUCT SETUP > USER-PROGRAMMABLE SELF TESTS***

■ USER-PROGRAMMABLE
■ SELF TESTS

DIRECT RING BREAK FUNCTION: Enabled	Range: Disabled, Enabled. Valid for units equipped with Direct Input/Output module.
DIRECT DEVICE OFF FUNCTION: Enabled	Range: Disabled, Enabled. Valid for units equipped with Direct Input/Output module.
RxGOOSE OFF FUNCTION: Enabled	Range: Disabled, Enabled
FIRST ETHERNET FAIL FUNCTION: Disabled	Range: Disabled, Enabled
SEC. ETHERNET FAIL FUNCTION: Disabled	Range: Disabled, Enabled
THIRD ETHERNET FAIL FUNCTION: Disabled	Range: Disabled, Enabled
SFP MODULE FAIL FUNCTION: Disabled	Range: Disabled, Enabled
BATTERY FAIL FUNCTION: Enabled	Range: Disabled, Enabled
SNTP FAIL FUNCTION: Enabled	Range: Disabled, Enabled
IRIG-B FAIL FUNCTION: Enabled	Range: Disabled, Enabled
PTP FAIL FUNCTION: Enabled	Range: Disabled, Enabled
SV STREAM TROUBLE FUNCTION: Enabled	Range: Disabled, Enabled

⇳	PB ETH PORT <nm> FAIL FUNCTION: Disabled	Range: Disabled, Enabled
⇧	PB SFP MODUL <nm> FAIL FUNCTION: Disabled	Range: Disabled, Enabled

where n = 1 to 4, and m = a to b

All major self-test alarms are reported automatically with their corresponding FlexLogic operands, events, and targets.

This settings menu allows enabling and disabling of most minor self-test alarms. When in the Disabled mode, minor alarms do not assert a FlexLogic operand, write to the event recorder, or display target messages. Moreover, they do not trigger the `ANY MINOR ALARM` or `ANY SELF-TEST` messages. When enabled,minor alarms continue to function along with other major and minor alarms. When using the graphical front panel and setting annunciator alarms, the function needs to be enabled here too, else the alarm is not triggered.

> *Note:*
> *PB SFP MODUL # FAIL FUNCTION — For order code H85, ports 2a, 2b, 4a, 4b are not available.*

9.4.13 CONTROL PUSHBUTTONS

Setting path: ***SETTINGS > PRODUCT SETUP > CONTROL PUSHBUTTONS > CONTROL PUSHBUTTON <n>***

■ CONTROL ■ PUSHBUTTON <n>	⇔	CNTRL PUSHBUTTN <n> ID CTRL PB 1	Range: up to 20 alphanumeric characters
	⇳	CONTROL PUSHBUTTON <n> FUNCTION: Disabled	Range: Disabled, Enabled
	⇧	CONTROL PUSHBUTTON <n> EVENTS: Disabled	Range: Disabled, Enabled

where n = 1 to 7

This feature is supported with enhanced and basic front panels.

There are three standard control pushbuttons, labeled **USER 1**, **USER 2**, and **USER 3**, on the basic and enhanced front panels. These are user-programmable and can be used for various applications such as performing an LED test, switching setting groups, and invoking and scrolling though user-programmable displays.

The control pushbuttons are easily identifiable on the front panel with the labels **USER 1**, **USER 2** and **USER 3** for the standard option, and with the additional **USER 4, USER 5, USER 6** and **USER 7** as an optional extra for some models.

Control pushbuttons are not typically used for critical operations and are not protected by the control password. However, by supervising their output operands, the user can dynamically enable or disable control pushbuttons for security reasons.

Each control pushbutton asserts its own FlexLogic operand. Each operand need to be configured appropriately to perform the required function. Each operand remains asserted as long as the pushbutton is pressed and resets when the pushbutton is released. A dropout delay of 100 ms is incorporated to ensure fast pushbutton manipulation is recognized by various features that can use control pushbuttons as inputs.

An event is logged in the event record (as per user setting) when a control pushbutton is pressed. No event is logged when the pushbutton is released. The front panel keys (including control keys) cannot be operated simultaneously.

Firmware revisions 3.2x and older use these three pushbuttons for manual breaker control. This functionality has been retained—if the breaker control feature is configured to use the three pushbuttons, they cannot be used as user-programmable control pushbuttons.

The control pushbuttons become user-programmable only if the breaker control feature is not configured for manual control via the **USER 1** to **USER 3** pushbuttons as shown. If configured for manual control, breaker control typically

uses the larger, optional user-programmable pushbuttons, making the control pushbuttons available for other user applications.

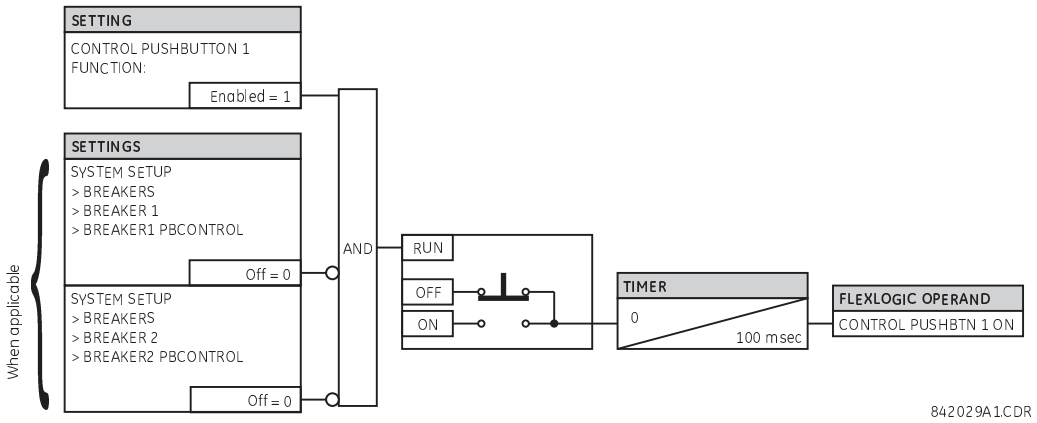

Control pushbutton logic

9.4.14 USER-PROGRAMMABLE PUSHBUTTONS

This feature is optional, specified at the time of ordering.

Setting path: ***SETTINGS > PRODUCT SETUP > USER-PROGRAMMABLE PUSHBUTTONS > USER PUSHBUTTON <n>***

■ USER PUSHBUTTON <n> ■	⇔ PUSHBUTTON <1> FUNCTION: Disabled	Range: Self-Reset, Latched, Disabled
	⇕ PUSHBTN <n> ID TEXT: USER PB 1	Range: up to 20 alphanumeric characters
	⇕ PUSHBTN <n> ON TEXT: PUSHBTN <n> ON	Range: up to 20 alphanumeric characters
	⇕ PUSHBTN <n> OFF TEXT: PUSHBTN <n> OFF	Range: up to 20 alphanumeric characters
	⇕ PUSHBTN <n> HOLD: 0.1 s	Range: 0.0 to 10.0 s in steps of 0.1
	⇕ PUSHBTN <n> SET: Off	Range: FlexLogic operand
	⇕ PUSHBTN <n> RESET: Off	Range: FlexLogic operand
	⇕ PUSHBTN <n> AUTORST: Disabled	Range: Disabled, Enabled
	⇕ PUSHBTN <n> AUTORST DELAY: 1.0 s	Range: 0.2 to 600.0 s in steps of 0.1
	⇕ PUSHBTN <n> REMOTE: Off	Range: FlexLogic operand
	⇕ PUSHBTN <n> LOCAL: Off	Range: FlexLogic operand
	⇕ PUSHBTN <n> DROP-OUT TIME: 0.00 s	Range: 0 to 60.00 s in steps of 0.05
	⇕ PUSHBTN <n> LED CTL: Off	Range: FlexLogic operand

⇕	PUSHBTN <n> MESSAGE: Disabled	Range: Disabled, Normal, High Priority
⇧	PUSHBUTTON <1> EVENTS: Disabled	Range: Disabled, Enabled

where n depends on the front panel ordered (12, 6, 16 or 48)

User-programmable pushbuttons provide an easy and error-free method of entering digital state (on, off) information. The number depends on the front panel ordered.

- Enhanced horizontal front panel — 16 user-programmable pushbuttons
- Enhanced vertical front panel — 6 user-programmable pushbuttons
- Basic horizontal front panel — 12 user-programmable pushbuttons
- Graphical front panel — 48 user-programmable pushbuttons (eight physical pushbuttons, 40 graphical interface pushbuttons)

> *Note:*
> *User-programmable pushbuttons require a front panel with that option. If the front panel was ordered separately, update the EnerVista software under Maintenance > Change Front Panel.*

The digital state can be entered locally (by directly pressing the front panel pushbutton or optional graphical front panel interface) or remotely (via FlexLogic operands) into FlexLogic equations, protection elements, and control elements. Typical applications include breaker control, autorecloser blocking, and setting groups changes. For example, set pushbuttons 1 to 5 to select settings groups 1 to 5, or set pushbutton 1 to clear event records. The user-programmable pushbuttons are under the control level of password protection.

Example

To clear event records using pushbutton 1, set ***Settings > Product Setup > Clear Relay Records > Clear Event Records*** to FlexLogic operand PUSHBUTTON 1 ON. Then program the pushbutton by setting ***Settings > Product Setup > User-Programmable Pushbuttons > Pushbutton 1 Function*** to `Self-reset`. For a graphical front panel, to use a side pushbutton to clear the event records, it also needs to be programmed in a single-line diagram.

The figures show user-configurable pushbuttons for the front panels.

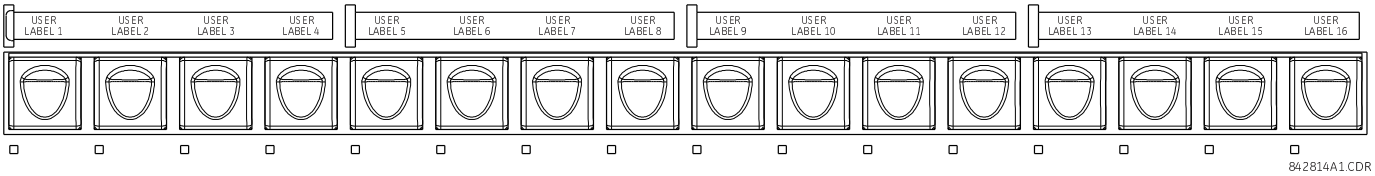

Figure 217: User-programmable pushbuttons (enhanced front panel)

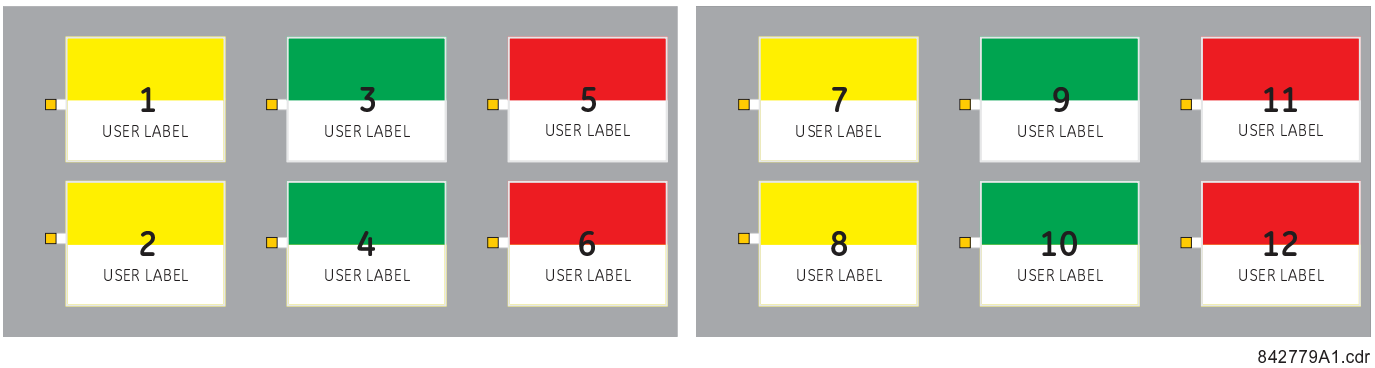

Figure 218: User-programmable pushbuttons (basic front panel)

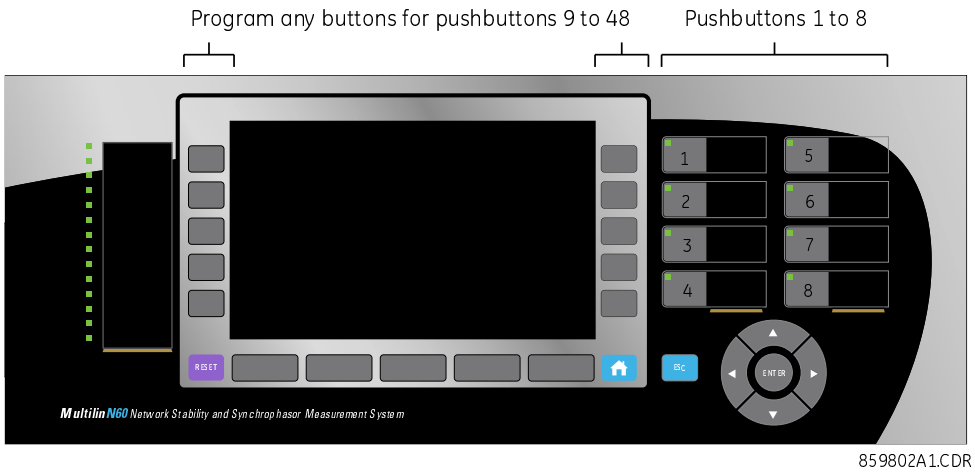

Figure 219: User-programmable pushbuttons (graphical front panel)

Each pushbutton asserts its own On and Off FlexLogic operands (for example, PUSHBUTTON 1 ON and PUSHBUTTON 1 OFF). These operands are available for each pushbutton and are used to program specific actions. If any pushbutton is active, the ANY PB ON operand is asserted.

Each pushbutton has an associated LED indicator. By default, this indicator displays the present status of the corresponding pushbutton (on or off). However, each LED indicator can be assigned to any FlexLogic operand through the ***PUSHBTN 1 LED CTL*** setting.

The activation and deactivation of user-programmable pushbuttons depends on whether latched or self-reset mode is programmed.

- **Latched mode** — In latched mode, a pushbutton can be set (activated) by asserting the operand assigned to the ***PUSHBTN 1 SET*** setting, by directly pressing the associated front panel pushbutton, or with the graphical front panel interface. The state of each pushbutton is stored in non-volatile memory and maintained through a loss of control power. The pushbutton is reset (deactivated) in latched mode by asserting the operand assigned to the ***PUSHBTN 1 RESET*** setting, by directly pressing the active front panel pushbutton, or with the graphical front panel interface. It can also be programmed to reset automatically through the ***PUSHBTN 1 AUTORST*** and ***PUSHBTN 1 AUTORST DELAY*** settings. These settings enable the autoreset timer and specify the associated time delay. The autoreset timer can be used in select-before-operate (SBO) breaker control applications, where the command type (close/open) or breaker location (feeder number) must be selected prior to command execution. The selection must reset automatically if control is not executed within a specified time period.
- **Self-reset mode** — In self-reset mode, a user-programmable pushbutton can be set (activated) by asserting the operand assigned to the ***PUSHBTN 1 SET*** setting, by pressing the front panel pushbutton, or by the graphical front panel interface. A pushbutton remains active for the time it is pressed physically or pressed in the graphical front panel interface, plus the dropout time specified in the ***PUSHBTN 1 DROP-OUT TIME*** setting. If the pushbutton is activated via FlexLogic, the pulse duration is specified by the ***PUSHBTN 1 DROP-OUT TIME*** setting only. The time the operand assigned to the ***PUSHBTN 1 SET*** setting remains On has no effect on the pulse duration.

Note:
The pulse duration of the remote set or local front panel pushbutton must be at least 56 ms for a 60 Hz system or 60 ms for a 50 Hz system to operate the pushbutton. This allows the user-programmable pushbuttons to properly operate during power cycling events and various system disturbances that can cause transient assertion of the operating signals.

The local and remote operation of each user-programmable pushbutton can be inhibited through the ***PUSHBTN 1 LOCAL*** and ***PUSHBTN 1 REMOTE*** settings. If local inhibit is applied, the pushbutton ignores set and reset commands executed through the front panel pushbuttons. If remote inhibit is applied, the pushbutton ignores set and reset commands executed through FlexLogic operands.

The inhibit functions are not applied to the autoreset feature. The inhibit function can be used in SBO control operations to prevent user-programmable pushbutton activation and ensuring 'one-at-a-time' select operation. The inhibit functions can also be used to prevent pushbutton activation from the accidental pressing of the front panel pushbuttons. The separate inhibit of the local and remote operation simplifies the implementation of local/remote control supervision.

Pushbutton states can be logged by the event recorder. User-defined messages can also be associated with each pushbutton and displayed on basic and enhanced front panels when the user-programmable pushbutton is activated, and when in the latched mode when the user-programmable pushbutton is deactivated. With the graphical front panel interface, instead of messages, the status of user-programmable pushbuttons can display on a single-line diagram and can also display in annunciator page windows and in actual values page cells.

For the graphical front panel, the pushbuttons 1 to 8 are linked to the eight physical pushbuttons, and pushbuttons 9 and above are mapped to the graphical interface pushbuttons. To set the buttons for pushbuttons 9 and above, access ***Settings > Product Setup > Graphical Panel > Single Line Diagram Editor,*** click the PB symbol in the toolbox, then configure pushbuttons 9 and above.

PUSHBUTTON 1 FUNCTION

This setting selects the mode of the pushbutton (Self-Reset, Latched, Disabled). If set to `Disabled`, the pushbutton is not active and the corresponding FlexLogic operands (both `On` and `Off`) are de-asserted. If set to `Latched`, the pushbutton remains on until reset.

PUSHBTN 1 ID TEXT

This setting specifies the top 20-character line of the user-programmable pushbutton message and is intended to provide ID information of the pushbutton. For example, the text displays in the Event Record. See the User-definable Displays section in this chapter for instructions on how to enter alphanumeric characters from the keypad. On a graphical front panel, this setting instead controls the label of the user-programmable pushbutton component on single-line diagrams.

PUSHBTN 1 ON TEXT

This setting specifies the bottom 20-character line of the user-programmable pushbutton message and is displayed when the pushbutton is in the On position. See the User-definable Displays section for instructions on entering alphanumeric characters from the keypad. On a graphical front panel, this setting instead controls the on status text of the user-programmable pushbutton component on single-line diagrams. This setting is not applied to the physical pushbuttons on the graphical front panel.

PUSHBTN 1 OFF TEXT

This setting specifies the bottom 20-character line of the user-programmable pushbutton message and displays when the pushbutton is deactivated and the ***PUSHBUTTON 1 FUNCTION*** is `latched`. A message does not display when the ***PUSHBUTTON 1 FUNCTION*** is `Self-reset` as the pushbutton operand status is implied to be `Off` upon its release. The length of the `Off` message is configured with the ***PRODUCT SETUP > DISPLAY PROPERTIES > FLASH MESSAGE > TIME*** setting. On a graphical front panel, this setting instead controls the off status text of the user-programmable pushbutton component on single-line diagrams. This setting is not applied to the physical pushbuttons on the graphical front panel.

PUSHBTN 1 HOLD

This setting specifies the time required for a front panel pushbutton to be pressed before it is deemed active. This timer is reset upon release of the pushbutton. Note that user-programmable pushbutton operation requires the front panel pushbutton to be pressed a minimum of 56 ms for a 60 Hz system or 60 ms for a 50 Hz system. This minimum time is required prior to activating the user-programmable pushbutton hold timer.

PUSHBTN 1 SET

This setting assigns the FlexLogic operand serving to activate the user-programmable pushbutton element. The duration of the incoming set signal must be at least 56 ms for a 60 Hz system or 60 ms for a 50 Hz system.

PUSHBTN 1 RESET

This setting assigns the FlexLogic operand serving to deactivate the user-programmable pushbutton element. This setting is applicable only if the user-programmable pushbutton is in `Latched` mode.

PUSHBTN 1 AUTORST

This setting enables the user-programmable pushbutton autoreset feature. This setting is applicable only if the pushbutton is in `Latched` mode.

PUSHBTN 1 AUTORST DELAY

This setting specifies the time delay for automatic reset of the pushbutton when in `Latched` mode.

PUSHBTN 1 REMOTE

This setting assigns the FlexLogic operand serving to inhibit user-programmable pushbutton operation from the operand assigned to the ***PUSHBTN 1 SET*** or ***PUSHBTN 1 RESET*** settings.

PUSHBTN 1 LOCAL

This setting assigns the FlexLogic operand serving to inhibit user-programmable pushbutton operation from the front panel pushbuttons. This inhibit functionality is not applicable to pushbutton autoreset.

PUSHBTN 1 DROP-OUT TIME

This setting applies only to `Self-Reset` mode and specifies the duration of the user-programmable pushbutton active status after the front panel pushbutton or graphical front panel interface pushbutton has been released. When activated remotely, this setting specifies the entire activation time of the pushbutton; the length of time the operand selected by ***PUSHBTN 1 SET*** remains on has no effect on the pulse duration.

PUSHBTN 1 LED CTL

This setting assigns the FlexLogic operand serving to drive the front panel pushbutton LED. If this setting is `Off`, then LED operation is directly linked to the PUSHBUTTON 1 ON operand. This setting is not applied to Pushbuttons 9 and above on the graphical front panel, where the label background shows the orange glow color for the `On` state.

PUSHBTN 1 MESSAGE

This setting controls the behavior of the user-programmable pushbutton on message that is programmed in the ***PUSHBTN 1 ID*** and ***PUSHBTN 1 ON TEXT*** settings, and the behavior of the user-programmable pushbutton off message that is programmed in the ***PUSHBTN 1 ID*** and ***PUSHBTN 1 OFF TEXT*** settings. This setting has no effect on the graphical front panel.

When set to `Disabled`, user-programmable pushbutton messages do not display. Otherwise the on message displays when the user-programmable pushbutton becomes activated, and if in the `Latched` mode the off message displays when the user-programmable pushbutton becomes deactivated.

When set to `Normal`, the duration the message displays is as specified by the ***FLASH MESSAGE TIME*** setting.

When set to `High Priority`, the duration of the off message is as specified by the ***FLASH MESSAGE TIME*** setting, but the on message is displayed as long as the user-programmable pushbutton is activated. While activated, target and other messages are suppressed. To allow front panel keypad operation, when a keypad button is pressed the message is suppressed for 10 seconds.

PUSHBUTTON 1 EVENTS

If this setting is enabled, each user-programmable pushbutton state change is logged as an event into the event recorder.

The figures show the user-programmable pushbutton logic.

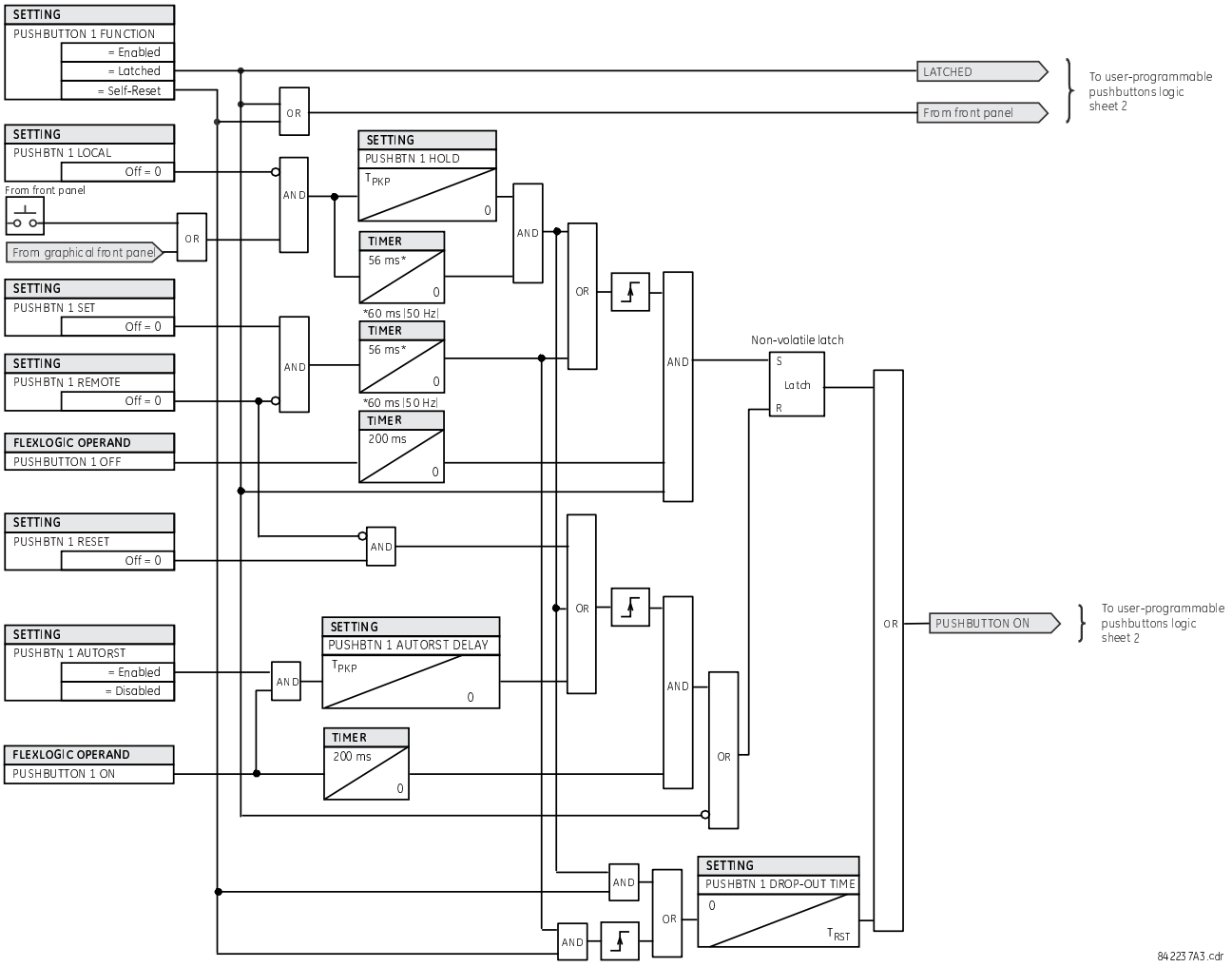

Figure 220: User-programmable pushbutton logic (Sheet 1 of 2)

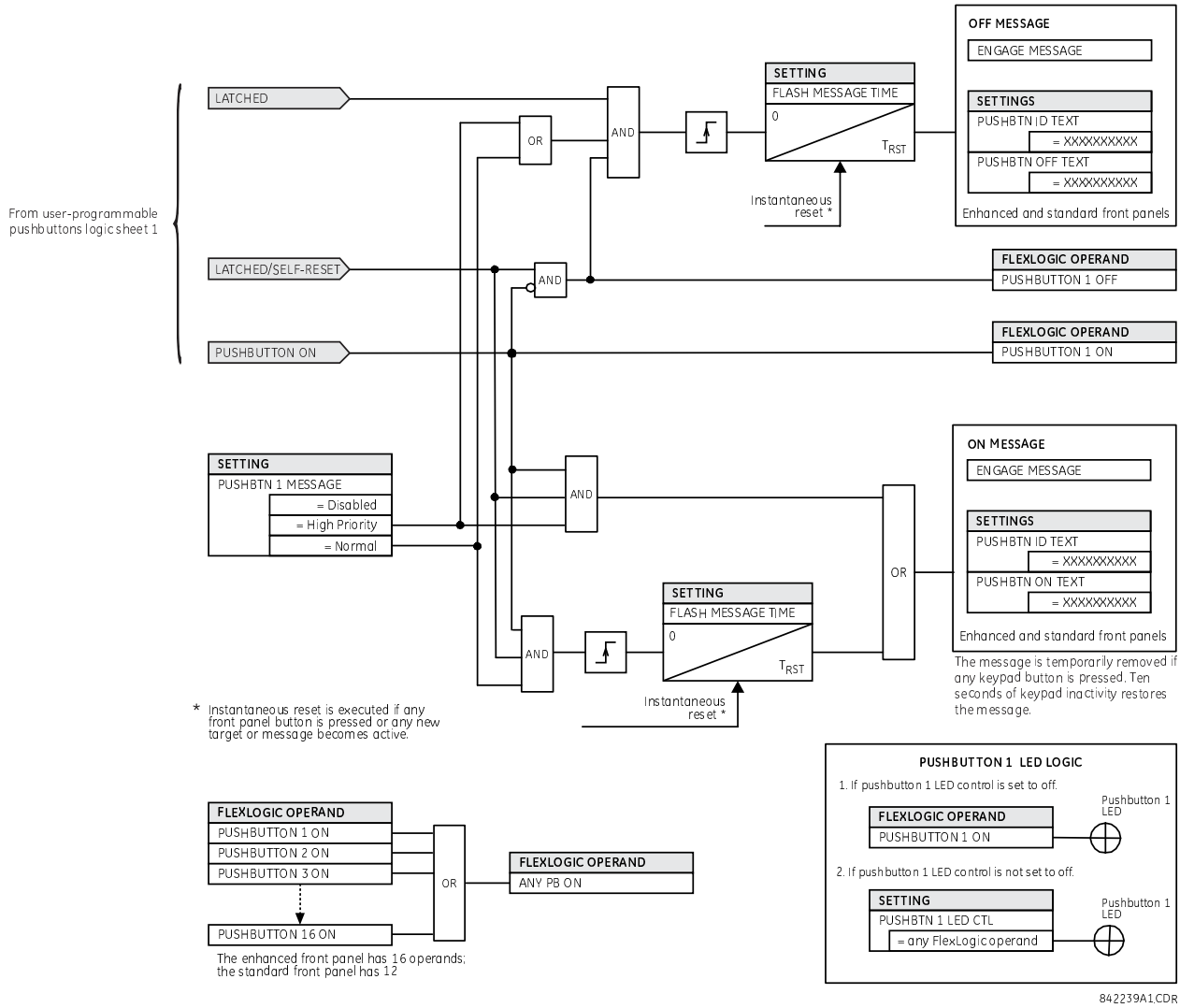

Figure 221: User-programmable pushbutton logic (Sheet 2 of 2)

9.4.15 FLEX STATE PARAMETERS

Setting path: ***SETTINGS > PRODUCT SETUP > FLEX STATE PARAMETERS***

■ FLEX STATE ■ PARAMETERS	⇔	PARAMETER <n>: Off	Range: FlexLogic operand

where n = 1 to 256

This feature provides a mechanism where any of 256 selected FlexLogic operand states can be used for efficient monitoring. The feature allows user-customized access to the FlexLogic operand states in the relay. The state bits are packed so that 16 states are readable in a single Modbus register. The state bits can be configured so that all states of interest are available in a minimum number of Modbus registers.

The state bits can be read out in the Flex States register array beginning at Modbus address 0900h. Sixteen states are packed into each register, with the lowest-numbered state in the lowest-order bit. Sixteen registers accommodate the 256 state bits.

9.4.16 USER-DEFINABLE DISPLAYS

Setting path: ***SETTINGS > PRODUCT SETUP > USER-DEFINABLE DISPLAYS***

■ USER-DEFINABLE ■ DISPLAYS	⇔	INVOKE AND SCROLL: Off	Range: FlexLogic operand
	⇧	■ USER DISPLAY <n> ■	

where n = 1 to 16

This feature is supported with enhanced and basic front panels. It is not supported with the optional graphical front panel.

This menu provides a mechanism for manually creating up to 16 user-defined information displays in a convenient viewing sequence in the ***USER DISPLAY*** menu (between the ***TARGETS*** and ***ACTUAL VALUES*** top-level menus). The sub-menus facilitate text entry and Modbus register data pointer options for defining the user display content.

Once programmed, the user-definable displays can be viewed in two ways:

- Keypad
- User-programmable control input

Keypad

Use the **MENU** key to select the ***USER DISPLAY*** menu item to access the first user-definable display (note that only the programmed screens are displayed). The screens can be scrolled using the up and down arrow keys. The display disappears after the default message time-out period specified by the ***PRODUCT SETUP > DISPLAY PROPERTIES > DEFAULT MESSAGE TIMEOUT*** setting.

User-programmable control input

The user-definable displays also respond to the ***INVOKE AND SCROLL*** setting. Any FlexLogic operand (in particular, the user-programmable pushbutton operands), can be used to navigate the programmed displays.

On the rising edge of the configured operand (such as when the pushbutton is pressed), the displays are invoked by showing the last user-definable display shown during the previous activity. From this moment onward, the operand acts exactly as the down key and allows scrolling through the configured displays. The last display wraps up to the first one. The ***INVOKE AND SCROLL*** input and the down arrow key operate concurrently.

When the default timer expires (set by the ***DEFAULT MESSAGE TIMEOUT*** setting), the relay starts to cycle through the user displays. The next activity of the ***INVOKE AND SCROLL*** input stops the cycling at the currently displayed user display, not at the first user-defined display. The ***INVOKE AND SCROLL*** pulses must last for at least 250 ms to take effect.

9.4.16.1 USER DISPLAY <N>

Setting path: ***SETTINGS > PRODUCT SETUP > USER-DEFINABLE DISPLAYS USER DISPLAY <n>***

■ USER DISPLAY <n>	⇔	DISP <n> TOP LINE:	Range: up to 20 alphanumeric characters
	⇩	DISP <n> BOTTOM LINE:	Range: up to 20 alphanumeric characters
	⇧	DISP <n> ITEM <m>: 0	Range: 0 to 65535 in steps of 1

where n = 1 to 16, m = 1 to 5

Any existing system display can be automatically copied into an available user display by selecting the existing display and pressing the **ENTER** key. The display then prompts with **ADD TO USER DISPLAY LIST?** After selecting `Yes`, a message indicates that the selected display has been added to the user display list. When this type of entry occurs, the sub-menus are automatically configured with the proper content—this content can be edited subsequently.

This menu is used to enter user-defined text and user-selected Modbus-registered data fields into the particular user display. Each user display consists of two 20-character lines (top and bottom). The tilde (~) character is used

to mark the start of a data field – the length of the data field needs to be accounted for. Up to five separate data fields can be entered in a user display – the nth tilde (~) refers to the nth item.

A user display can be entered from the front panel keypad or the EnerVista interface (preferred for convenience). The following procedure shows how to enter text characters in the top and bottom lines from the front panel keypad. Press the **HELP** key at any time for context sensitive help information.

1. Select the line to be edited.
2. Press the decimal key to enter text edit mode.
3. Use either **VALUE** key to scroll through the characters. A space is selected like a character.
4. Press the decimal key to advance the cursor to the next position.
5. Repeat step 3 and continue entering characters until the desired text is displayed.
6. Press the **ENTER** key to store the new settings.

To enter a numerical value for any of the five items (the decimal form of the selected Modbus address) from the front panel keypad, use the number keypad. Use the value of “0” for any items not being used. Use the **HELP** key at any selected system display (setting, actual value, or command) which has a Modbus address, to view the hexadecimal form of the Modbus address, then manually convert it to decimal form before entering it (EnerVista usage conveniently facilitates this conversion). See the Modbus Memory Map section earlier in this chapter for information on how to calculate the decimal value to enter on the front panel.

Use the **MENU** key to go to the user displays menu to view the user-defined content. The current user displays show in sequence, changing every four seconds. While viewing a user display, press the **ENTER** key and confirm to remove the display from the user display list. Use the **MENU** key again to exit the user displays menu.

An example of user display setup and result is shown as follows.

■ USER DISPLAY 1 ■	⇔	DISP 1 TOP LINE: Current X ~ A	Shows user-defined text with first tilde marker
	⇕	DISP 1 BOTTOM LINE: Current Y ~ A	Shows user-defined text with second tilde marker
	⇕	DISP 1 ITEM 1: 6016	Shows decimal form of user-selected Modbus register address, corresponding to first tilde marker
	⇕	DISP 1 ITEM 2: 6357	Shows decimal form of user-selected Modbus register address, corresponding to second tilde marker
	⇕	DISP 1 ITEM 3: 0	This item is not being used. There is no corresponding tilde marker in top or bottom lines.
	⇕	DISP 1 ITEM 4: 0	This item is not being used. There is no corresponding tilde marker in top or bottom lines.
		DISP 1 ITEM 5: 0	This item is not being used. There is no corresponding tilde marker in top or bottom lines.

■ USER DISPLAYS ■	⇔	Current X 0.850 Current Y 0.327 A	Shows the resultant display content

If the parameters for the top line and the bottom line items have the same units, then the unit is displayed on the bottom line only. The units are only displayed on both lines if the units specified both the top and bottom line items are different.

9.4.17 DIRECT INPUTS AND OUTPUTS

Setting path: ***SETTINGS > PRODUCT SETUP > DIRECT I/O***

■ DIRECT I/O	⇔	DIRECT OUTPUTS DEVICE ID: 1	Range:1 to 16 in steps of 1
	⇕	DIRECT I/O CH1 RING CONFIGURATION: Yes	Range: Yes, No
	⇕	DIRECT I/O CH2 RING CONFIGURATION: Yes	
	⇕	DIRECT I/O DATA RATE: 64 kbps	
	⇕	DIRECT I/O CHANNEL CROSSOVER: Disabled	
	⇕	■ CRC ALARM CH1 ■	
	⇕	■ CRC ALARM CH2 ■	
	⇕	■ UNRETURNED ■ MESSAGES ALARM CHANEL 1	
	⇑	■ UNRETURNED ■ MESSAGES ALARM CHANEL 2	

Note:
This option is available when an Inter-Relay Communications card is specified at the time of ordering. With the option, direct inputs/outputs display by default. When you enable the teleprotection feature, direct I/O is not visible.

Direct inputs and outputs provide the ability to exchange status information between relays connected together with type 7 digital communications cards. The mechanism is very similar to IEC 61850 GOOSE, except that communications takes place over a non-switchable isolated network and is optimized for speed. On type 7 cards that support two channels, messages are sent from both channels simultaneously. This effectively sends direct output messages both ways around a ring configuration. On type 7 cards that support one channel, messages are sent only in one direction. Messages are resent (forwarded) when it is determined that the message did not originate at the receiver.

Direct Inputs and Outputs are initiated automatically and start running when at least one Direct Output in the given UR is set to anything but Off.

For the direct I/Os to function properly, all UR devices sending I/Os using an Inter-Relay Communications card must have identical firmware revisions.

Note:
Teleprotection inputs/outputs and direct inputs/outputs are mutually exclusive. As such, they cannot be used simultaneously. Once teleprotection inputs and outputs are enabled, direct inputs and outputs are disabled, and vice versa.

Direct output message timing is similar to GOOSE message timing. Integrity messages (with no state changes) are sent at least every 1000 ms. Messages with state changes are sent within the main pass scanning the inputs and asserting the outputs unless the communication channel bandwidth has been exceeded. Two self-tests are performed and signaled by the following FlexLogic operands:

DIRECT RING BREAK (direct input/output ring break) — Indicates that direct output messages sent from a UR-series relay are not being received back by the relay

DIRECT DEVICE 1 OFF to DIRECT DEVICE 16 OFF (direct device offline) — Indicate that direct output messages from at least one direct device are not being received

Direct input and output settings are similar to remote input and output settings. The equivalent of the remote device name strings for direct inputs and outputs is the ***DIRECT OUTPUT DEVICE ID*** setting, which identifies the relay in all direct output messages. All UR-series IEDs in a ring need to have unique numbers assigned. The IED ID is used to identify the sender of the direct input and output message.

If the direct input and output scheme is configured to operate in a ring, all direct output messages are received back. If not, the direct input/output ring break self-test is triggered. The self-test error is signaled by the DIRECT RING BREAK FlexLogic operand.

Select the ***DIRECT I/O DATA RATE*** to match the data capabilities of the communications channel. All relays communicating over direct inputs and outputs must be set to the same data rate. UR-series relays equipped with dual-channel communications cards apply the same data rate to both channels. Delivery time for direct input and output messages is approximately 0.2 or 0.4 of a power system cycle, depending on the data rate.

Direct input and output data rates

Module	Supported data rates
2A, 2B	64 kbps
2E, 2F (legacy modules)	64 kbps
2G, 2H	128 kbps
2I, 2J	64 kbps, 128 kbps
72, 73	64 kbps, 128 kbps, 213 kbps (B90 only)
74, 75	64 kbps
76, 77	64 kbps
7A, 7B, 7C, 7D	64 kbps, 128 kbps, 213 kbps (B90 only)
7E, 7F, 7G	64 kbps
7H, 7I, 7J, 7K	64 kbps, 128 kbps, 213 kbps (B90 only)
7L, 7M, 7N, 7P, 7Q	64 kbps
7R, 7S	64 kbps
7T, 7W	64 kbps

The ***DIRECT I/O CHANNEL CROSSOVER*** setting applies to a Product with dual-channel communication cards and allows crossing over messages from channel 1 to channel 2. This places all UR-series relays into one direct input and output network regardless of the physical media of the two communication channels.

The following application examples illustrate the basic concepts for direct input and output configuration. See the Inputs and Outputs section for information on configuring FlexLogic operands (flags, bits) to be exchanged.

Example 1: Extending the input/output capabilities of a UR-series relay

Consider an application that requires additional quantities of contact inputs or output contacts or lines of programmable logic that exceed the capabilities of a single UR-series chassis. The problem is solved by adding an extra UR-series IED, such as the C30, to satisfy the additional input and output and programmable logic requirements. The two IEDs are connected via single-channel digital communication cards as shown in the figure.

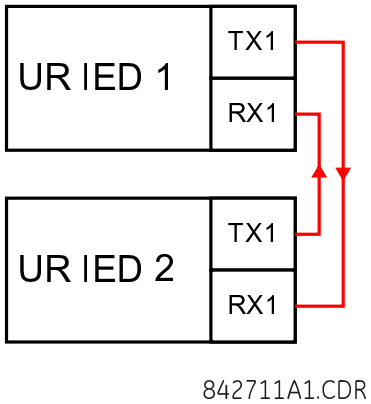

Figure 222: Input and output extension via direct inputs and outputs

In this application, apply the following settings. For relay 1:

- DIRECT OUTPUT DEVICE ID: “1”
- DIRECT I/O CH1 RING CONFIGURATION: “Yes”
- DIRECT I/O DATA RATE: “128 kbps”
- For UR-series IED 2:
- DIRECT OUTPUT DEVICE ID: “2”
- DIRECT I/O CH1 RING CONFIGURATION: “Yes”
- DIRECT I/O DATA RATE: “128 kbps”

The message delivery time is about 0.2 of power cycle in both ways (at 128 kbps); that is, from device 1 to device 2, and from device 2 to device 1. Different communications cards can be selected by the user for this back-to-back connection (for example: fiber, or RS422).

Example 2: Interlocking busbar protection

A simple interlocking busbar protection scheme could be accomplished by sending a blocking signal from downstream devices, say 2, 3, and 4, to the upstream device that monitors a single incomer of the busbar, as shown.

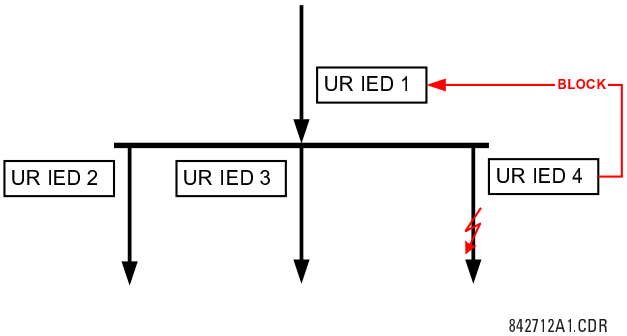

Figure 223: Sample interlocking busbar protection scheme

For increased reliability, a dual-ring configuration (shown as follows) is recommended for this application.

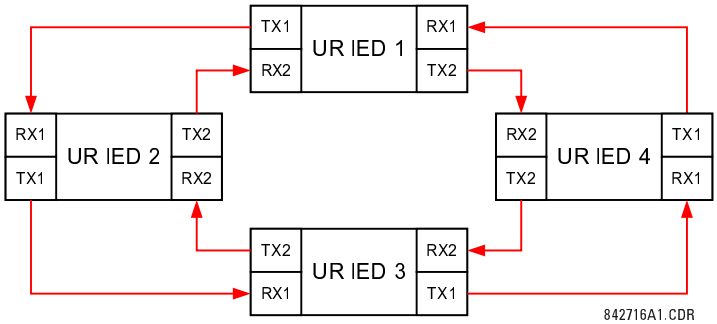

Figure 224: Interlocking bus protection scheme via direct inputs/outputs

In this application, apply the following settings. For relay :

- DIRECT OUTPUT DEVICE ID: “1”
- DIRECT I/O CH1 RING CONFIGURATION: “Yes”
- DIRECT I/O CH2 RING CONFIGURATION: “Yes”

For relay 2:

- DIRECT OUTPUT DEVICE ID: “2”
- DIRECT I/O CH1 RING CONFIGURATION: “Yes”
- DIRECT I/O CH2 RING CONFIGURATION: “Yes”

For relay 3:

- DIRECT OUTPUT DEVICE ID: “3”
- DIRECT I/O CH1 RING CONFIGURATION: “Yes”
- DIRECT I/O CH2 RING CONFIGURATION: “Yes”

For relay 4:

- DIRECT OUTPUT DEVICE ID: “4”
- DIRECT I/O CH1 RING CONFIGURATION: “Yes”
- DIRECT I/O CH2 RING CONFIGURATION: “Yes”

The Message delivery time is approximately 0.2 of power system cycle (at 128 kbps) times number of ‘bridges’ between the origin and destination. Dual-ring configuration effectively reduces the maximum ‘communications distance’ by a factor of two.

In this configuration the following delivery times are expected (at 128 kbps) if both rings are healthy:

Relay 1 to Relay 2: 0.2 of power system cycle

Relay 1 to Relay 3: 0.4 of power system cycle

Relay 1 to Relay 4: 0.2 of power system cycle

Relay 2 to Relay 3: 0.2 of power system cycle

Relay 2 to Relay 4: 0.4 of power system cycle

Relay 3 to Relay 4: 0.2 of power system cycle

If one ring is broken (say TX2-RX2) the delivery times are as follows:

Relay 1 to Relay 2: 0.2 of power system cycle

Relay 1 to Relay 3: 0.4 of power system cycle

Relay 1 to Relay 4: 0.6 of power system cycle

Relay 2 to Relay 3: 0.2 of power system cycle

Relay 2 to Relay 4: 0.4 of power system cycle

Relay 3 to Relay 4: 0.2 of power system cycle

A coordinating timer for this bus protection scheme could be selected to cover the worst case scenario (0.4 of a power system cycle). Upon detecting a broken ring, the coordination time is adaptively increased to 0.6 of a power system cycle. The complete application requires addressing a number of issues, such as failure of both the communications rings, failure or out-of-service conditions of one of the relays, and so on. Self-monitoring flags of the direct inputs and outputs feature primarily are used to address these concerns.

Example 3: Pilot-aided schemes

Consider the three-terminal line protection application shown.

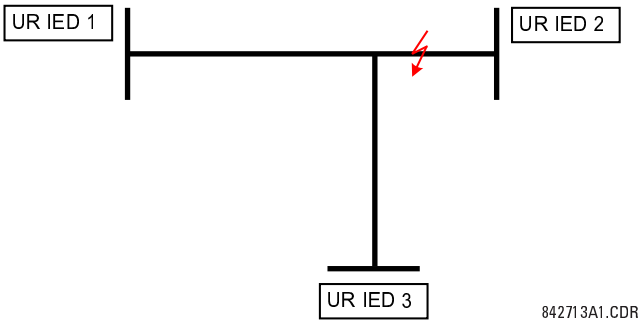

Figure 225: Three-terminal line application

A permissive pilot-aided scheme can be implemented in a two-ring configuration, shown as follows (Relays 1 and 2 constitute a first ring, while Relays 2 and 3 constitute a second ring).

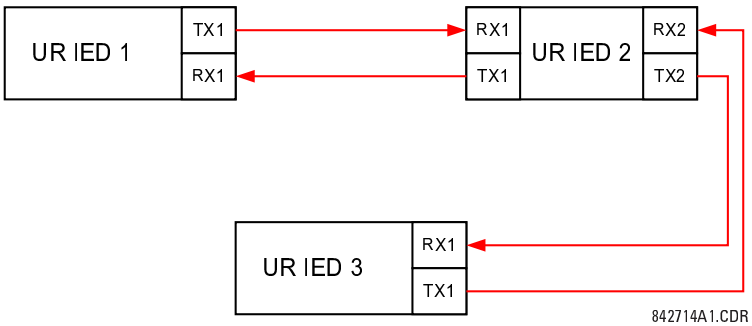

Figure 226: Single-channel open loop configuration

In this application, apply the following settings. For UR-series Relay 1:

- DIRECT OUTPUT DEVICE ID: “1”
- DIRECT I/O CH1 RING CONFIGURATION: “Yes”
- DIRECT I/O CH2 RING CONFIGURATION: “Yes”

For UR-series Relay 2:

- DIRECT OUTPUT DEVICE ID: “2”
- IRECT I/O CH1 RING CONFIGURATION: “Yes”
- DIRECT I/O CH2 RING CONFIGURATION: “Yes”

For UR-series Relay 3:

- DIRECT OUTPUT DEVICE ID: “3”
- DIRECT I/O CH1 RING CONFIGURATION: “Yes”
- DIRECT I/O CH2 RING CONFIGURATION: “Yes”

In this configuration the following delivery times are expected (at 128 kbps):

- Relay 1 to Relay 2: 0.2 of power system cycle
- Relay 1 to Relay 3: 0.5 of power system cycle
- Relay 2 to Relay 3: 0.2 of power system cycle

In this scheme, Relays 1 and 3 do not communicate directly. Relay 2 must be configured to forward the messages as explained in the Inputs and Outputs section. Implement a blocking pilot-aided scheme with more security and, ideally, faster message delivery time. This is accomplished using a dual-ring configuration as shown here.

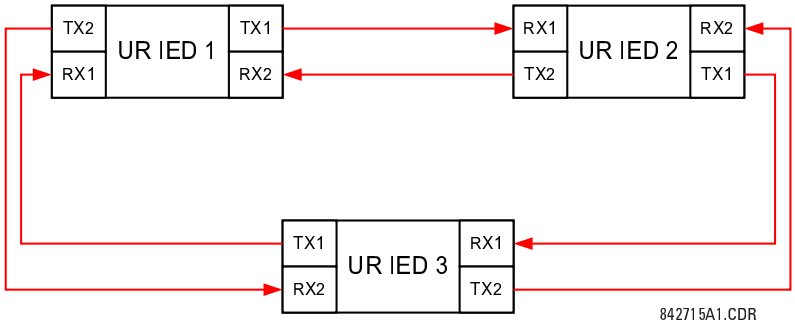

Figure 227: Dual-channel closed loop (dual-ring) configuration

In this application, apply the following settings. For UR-series Relay 1:

- DIRECT OUTPUT DEVICE ID: “1”
- DIRECT I/O CH1 RING CONFIGURATION: “Yes”
- DIRECT I/O CH2 RING CONFIGURATION: “Yes”

For UR-series Relay 2:

- DIRECT OUTPUT DEVICE ID: “2”
- DIRECT I/O CH1 RING CONFIGURATION: “Yes”
- DIRECT I/O CH2 RING CONFIGURATION: “Yes”

For UR-series Relay 3:

- DIRECT OUTPUT DEVICE ID: “3”
- DIRECT I/O CH1 RING CONFIGURATION: “Yes”
- DIRECT I/O CH2 RING CONFIGURATION: “Yes”

In this configuration the following delivery times are expected (at 128 kbps) if both the rings are healthy:

- Relay 1 to Relay 2: 0.2 of power system cycle
- Relay 1 to Relay 3: 0.2 of power system cycle
- Relay 2 to Relay 3: 0.2 of power system cycle

The two communications configurations can be applied to both permissive and blocking schemes. Take speed, reliability, and cost into account when selecting the required architecture.

9.4.17.1 CRC ALARM

Setting path: ***SETTINGS > PRODUCT SETUP > DIRECT I/O > CRC ALARM CH1(2)***

> *Note:*
> *Only channel 1 is shown*

■ CRC ALARM CH 1	⇔	CRC ALARM CH 1: FUN CTION: Disabled	Range: Enabled, Disabled

⇕	CRC ALARM CH 1 MESSAGE COUNT: 600	Range: 100 to 10000 in steps of 1
⇕	CRC ALARM CH 1 THRESHOLD: 10	Range: 1 to 1000 in steps of 1
⇧	CRC ALARM CH 1 EVENTS: Disabled	Range: Enabled, Disabled

The relay checks the integrity of the incoming Direct I/O messages using a 32-bit CRC. The CRC alarm function is available for monitoring the communication medium noise by tracking the rate of messages failing the CRC check. The monitoring function counts all incoming messages, including messages that failed the CRC check. A separate counter adds up messages that failed the CRC check. When the failed CRC counter reaches the user-defined level specified by the ***CRC ALARM CH1 THRESHOLD*** setting, the DIR IO CH1 CRC ALARM FlexLogic operand is set.

When the total message counter reaches the user-defined maximum specified by the ***CRC ALARM CH1 MESSAGE COUNT*** setting, both the counters reset and the monitoring process is restarted.

You configure the operand to drive an output contact, user-programmable LED, or selected communication-based output.

The CRC alarm function is available on a per-channel basis. The total number of Direct I/O messages that failed the CRC check is available as an Actual Value ***ACTUAL VALUES > STATUS > DIRECT INPUTS > CRC FAIL COUNT CH1***.

Message count and length of the monitoring window

To monitor communications integrity, the relay sends 1 message per second at 64 kbps, 2 messages per second at 128 kbps, or for the B90 only, 3 messages per second at 213 kbps, even if there is no change in the direct outputs. If the messages are sent faster as a result of direct outputs activity, the monitoring time interval shortens. Take this into account when determining the ***CRC ALARM CH1 MESSAGE COUNT*** setting. For example, if the requirement is a maximum monitoring time interval of 10 minutes at 64 kbps, then the ***CRC ALARM CH1 MESSAGE COUNT*** is set to 10 x 60 x 1 = 600.

Correlation of failed CRC and bit error rate (BER)

The CRC check can fail if one or more bits in a packet are corrupted. Therefore, an exact correlation between the CRC fail rate and the BER is not possible. Under certain assumptions an approximation can be made as follows. A direct input and output packet containing 20 bytes results in 160 bits of data being sent and therefore, a transmission of 63 packets is equivalent to 10,000 bits. A BER of 10–4 implies 1 bit error for every 10000 bits sent or received. Assuming the best case of only 1 bit error in a failed packet, having 1 failed packet for every 63 received is about equal to a BER of 10^{-4}.

9.4.17.2 UNRETURNED MESSAGES ALARM

Setting path: ***SETTINGS > PRODUCT SETUP > DIRECT I/O > UNRETURNED MESSAGES ALARM CH 1(2)***

■ UNRETURNED ■ MESSAGES ALARM CH1	⇔	UNRET MSGS ALARM CH1 FUNCTION: Disabled	Range: Enabled, Disabled
	⇕	UNRET MSGS ALARM CH1 MESSAGE COUNT: 600	Range: 100 to 10000 in steps of 1
	⇕	UNRET MSGS ALARM CH1 THRESHOLD: 10	Range: 1 to 1000 in steps of 1
	⇧	UNRET MSGS ALARM CH1 EVENTS: Disabled	Range: Enabled, Disabled

The relay checks the integrity of the direct input and output communication ring by counting unreturned messages. In the ring configuration, all messages originating at a given device should return within a pre-defined period of time.

The unreturned messages alarm function is available for monitoring the integrity of the communication ring by tracking the rate of unreturned messages. This function counts all the outgoing messages and a separate counter adds the messages have failed to return. When the unreturned messages counter reaches the user-definable level specified by the ***UNRET MSGS ALARM CH1 THRESHOLD*** setting and within the user-defined message count ***UNRET MSGS ALARM CH1 COUNT***, the DIR IO CH1 UNRET ALM FlexLogic operand is set.

When the total message counter reaches the user-defined maximum specified by the ***UNRET MSGS ALARM CH1 MESSAGE COUNT*** setting, both the counters reset and the monitoring process is restarted.

Configure the operand to drive an output contact, user-programmable LED, or selected communication-based output. Latching and acknowledging conditions, if required, are programmed accordingly.

The unreturned messages alarm function is available on a per-channel basis and is active only in the ring configuration. The total number of unreturned input and output messages is available as the ***ACTUAL VALUES > STATUS > DIRECT INPUTS > UNRETURNED MSG COUNT CH1*** actual value.

9.4.18 TELEPROTECTION

Setting path: ***SETTINGS > PRODUCT SETUP > DIRECT I/O > CRC ALARM CH <n>***

■ TELEPROTECTION	TELEPROTECTION FUN CTION: Disabled	Range: Enabled, Disabled
	NUMBER OF TERMINALS 2	Range: 2, 3
	NUMBER OF COMM CHANNELS: 1	Range: 1, 2
	LOCAL RELAY ID NUMBER: 0	Range: 0 to 63 in steps of 1
	TERMINAL 1 RELAY ID NUMBER: 0	Range: 0 to 63 in steps of 1
	TERMINAL 2 RELAY ID NUMBER: 0	Range:0 to 63 in steps of 1

Note:
This option is available when an Inter-Relay Communications card is specified at the time of ordering. With the option, direct inputs/outputs display by default. When you enable the teleprotection feature, direct I/O is not visible.

Digital teleprotection transfers protection commands between two or three relays in a secure, fast, dependable, and deterministic way. Possible applications are permissive or blocking pilot schemes and direct transfer trip (DTT). Teleprotection can be applied over any analog or digital channels and any communications media, such as direct fiber, copper wires, optical networks, or microwave radio links. A mixture of communication media is possible.

Once teleprotection is enabled and the teleprotection input/outputs are configured, data packets are transmitted continuously every 1/4 cycle (3/8 cycle if using C37.94 modules) from peer-to-peer. Security of communication channel data is achieved by using CRC-32 on the data packet.

Note:
Teleprotection inputs/outputs and direct inputs/outputs are mutually exclusive. As such, they cannot be used simultaneously. Once teleprotection inputs and outputs are enabled, direct inputs and outputs are blocked, and vice versa.

NUMBER OF TERMINALS

Specifies whether the teleprotection system operates between two peers or three peers.

NUMBER OF CHANNELS

Specifies how many channels are used. If the ***NUMBER OF TERMINALS*** is `3` (three-terminal system), set the ***NUMBER OF CHANNELS*** to `2`. For a two-terminal system, the ***NUMBER OF CHANNELS*** can set to `1` or `2` (redundant channels).

LOCAL RELAY ID NUMBER, TERMINAL 1 RELAY ID NUMBER, and TERMINAL 2 RELAY ID NUMBER

In installations that use multiplexers or modems, you should make sure that the data used by the relays protecting a given line is from the correct relays. The teleprotection function performs this check by reading the message ID sent by transmitting relays and comparing it to the programmed ID in the receiving relay. This check is also used to block inputs if inadvertently set to loopback mode, or data is being received from a wrong relay by checking the ID on a received channel. If an incorrect ID is found on a channel during normal operation, the TELEPROT CH1 ID FAIL or TELEPROT CH2 ID FAIL FlexLogic operand is set, driving the event with the same name and blocking the teleprotection inputs. For commissioning purposes, the result of channel identification is also shown in the ***STATUS > CHANNEL TESTS > VALIDITY OF CHANNEL CONFIGURATION*** actual value. The default value of `0` for the ***LOCAL RELAY ID NUMBER*** indicates that relay ID is not to be checked. On two-terminals two-channel systems, the same ***LOCAL RELAY ID NUMBER*** is transmitted over both channels; as such, only the ***TERMINAL 1 ID NUMBER*** has to be programmed on the receiving end.

9.4.19 INSTALLATION

Setting path: ***SETTINGS > PRODUCT SETUP > INSTALLATION***

■ INSTALLATION	⇔	RELAY SETTINGS: Not Programmed	Range: Not Programmed, Programmed
	⇕	RELAY NAME: Relay-1:	Range: up to 20 alphanumeric characters
	⇧	STATION NAME Station-1	Range: up to 20 alphanumeric characters

RELAY SETTINGS

To safeguard against the installation of a relay without any entered settings, the unit does not allow signaling of any output relay until ***RELAY SETTINGS*** is set to `Programmed`. This setting is `Not Programmed` by default. The `UNIT NOT PROGRAMMED` self-test error message displays until the relay is put into the `Programmed` state.

RELAY NAME

This setting allows the user to uniquely identify a relay. This name appears on generated reports.

STATION NAME

This setting allows the user to associate the relay with the installed substation.

9.5 SYSTEM SETUP

This section describes all the settings necessary for setting up the system:

9.5.1 AC INPUTS

Setting path: ***SETTINGS > SYSTEM SETUP > AC INPUTS***

■ AC INPUTS ■	⇔	■ CURRENT BANK F1(M5) ■
	⇧	■ VOLTAGE BANK F1(M5) ■

9.5.1.1 CURRENT BANKS

Setting path: ***SETTINGS > SYSTEM SETUP > AC INPUTS> CURRENT BANK <X,Y>***

Upto six banks are available with designations dependent on the configuration. Only bank F1 is shown here.

■ CURRENT BANK F1 ■	⇔	PHASE CT F1 PRIMARY: 1 A	Range: 1 to 65000 A in steps of 1
	⇕	PHASE CT F1 SECONDARY: 1 A	Range: 1 A, 5 A: 0 to 65535 in steps of 1
	⇕	PHASE CT F1 POL: STANDARD	Range: Standard, Inverted-3Ph, Inverted Ph-A, Inverted Ph-B, Inverted Ph-C
	⇕	GROUND CT F1 PRIMARY: 1 A	Range: 1 to 65000 A in steps of 1
	⇕	GROUND CT F1 SECONDARY: 1 A	Range: 1 A, 5 A
	⇧	GROUND CT F1 POL: STANDARD	Range: Standard, Inverted

For a Product with -9-2LE hardware and software options, this element is not present.

If applicable, record the value of any energy parameters and then reset immediately prior to changing any CT characteristics.

Depending on the model, either two, four or six banks of phase and ground CTs can be set, where the current banks are denoted in the following format Xa, where X = the slot designation, and a is the AC quantity group designation.

These settings are critical for all features that have settings dependent on current measurements. When the relay is ordered, the CT module must be specified to include a standard or sensitive ground input. As the phase CTs are connected in wye (star), the calculated phasor sum of the three phase currents (IA + IB + IC = neutral current = 3I0) is used as the input for the neutral overcurrent elements. In addition, a zero-sequence (core balance) CT which senses current in all of the circuit primary conductors, or a CT in a neutral grounding conductor can also be used. For this configuration, the ground CT primary rating must be entered. To detect low level ground fault currents, the sensitive ground input can be used. In this case, the sensitive ground CT primary rating must be entered. See chapter 3 for more details on CT connections.

Enter the rated CT primary current values. For both 1000:5 and 1000:1 CTs, the entry would be 1000. For correct operation, the CT secondary rating must match the setting (which must also correspond to the specific CT connections used).

The following example illustrates how multiple CT inputs (current banks) are summed as one source current. Given the following current banks:

F1: CT bank with 500:1 ratio

F5: CT bank with 1000:1 ratio

The source current is $SRC\ 1 = F1 + F5$

The highest primary current (in F5) is 1 pu, so the secondary current from the other two CTs are adjusted accordingly before summation. If a protection element is set up to act on SRC 1 currents, then a pickup level of 1 pu operates on 1000 A primary.

The same rule applies for current sums from CTs with different secondary taps (5 A and 1 A).

Warning:
In case of current sums from CTs with the same primary current but different secondary current, the first CT bank becomes a base and second CT bank current is-rescaled to the first CT bank (for example F1+M1, F1 is a base for the settings and actual values).

The relay allows the reversal of the CT polarity for a single phase or three phases without changing the wiring. You do this using the settings ***PHASE CT F1 (Xa) POL*** and ***GROUND CT F1 (Xa) POL***.

PHASE CT F1 POL

If CTs are wired with the correct polarity in all phases, i.e. CT polarity reversal is not required; the `Standard` value should be selected. If the CT polarity is incorrect in just one phase, let's say phase A, then select `Inverted Ph-A`. If CT polarities of all three phases are incorrect, select `Inverted-3Ph` to correct the CT polarities for all three phases. Note that the oscillography record will capture the CTs current signal as applied to the relay terminal irrespective of this setting. This ensures correct relay behavior when recorded oscillography is played back to the relay.

GROUND CT F1 POL

The same principles described above apply.

Note:
It is important that the settings PHASE CT F1 POL and GROUND CT F1 POL are set to the correct values before putting the relay into operation. Selecting the wrong value or changing this setting whilst relay is in operation would result in undesirable operation of the protection and control functions.

9.5.1.2 VOLTAGE BANKS

Setting path: ***SETTINGS > SYSTEM SETUP > AC INPUTS > VOLTAGE BANK <X,Y>***

Up to six banks are available. Only bank F5 is shown here.

■ VOLTAGE BANK F5 ■	⇔	PHASE VT F5 CONNECTION: Wye	Range: Wye, Delta
	⇕	PHASE VT F5 SECONDARY: 66.4 V	Range: 25.0 to 240.0 V in steps of 0.1
	⇕	PHASE VT F5 RATIO: 1.00 :1	Range: 1.00 to 24000.00 in steps of 0.01
	⇕	AUXILIARY VT F5 CONNECTION: Vag	Range: Vn, Vag, Vbg, Vcg, Vab, Vbc, Vca
	⇕	AUXILIARY VT F5 SECONDARY: 66.4 V	Range: 25.0 to 240.0 V in steps of 0.1
	⇧	AUXILIARY VT F5 RATIO: 1.00 :1	Range: 1.00 to 24000.00 in steps of 0.01

If applicable, record the value of any energy parameters and then reset immediately prior to changing any VT characteristics.

Depending on the model, either one, two, three or twenty four banks of phase/auxiliary VTs can be set.

With VTs installed, the relay can perform voltage measurements as well as power calculations.

PHASE VT F5 CONNECTION

You can set this to `Wye` or `Delta`

PHASE VT F5 SECONDARY

Here, you set the secondary value of the phase VT in bank F5

PHASE VT F5 RATIO

Here you set the VT ratio of the phase VT in bank F5

AUXILIARY VT F5 CONNECTION

Here you set the connection of the auxiliary VT (Vn, Vag, Vbg, Vcg, Vab, Vbc, Vca)

AUXILIARY VT F5 SECONDARY

Here, you set the secondary value of the auxiliary VT in bank F5

AUXILIARY VT F5 RATIO

Here you set the VT ratio of the auxiliary VT in bank F5

> *Note:*
> *The nominal **PHASE VT F5 SECONDARY** voltage setting is the voltage across the relay input terminals when nominal voltage is applied to the VT primary.*

> *Note:*
> *For example, on a system with a 13.8 kV nominal primary voltage and with a 14400:120 volt VT in a delta connection, the secondary voltage is 115; that is, (13800 / 14400) × 120. For a wye connection, the voltage value entered must be the phase to neutral voltage, which is 115 / = 66.4.*

> *Note:*
> *On a 14.4 kV system with a delta connection and a VT primary to secondary turns ratio of 14400:120, the voltage value entered is 120; that is, 14400 / 120.*

9.5.2 POWER SYSTEM

Setting path: ***SETTINGS > SYSTEM SETUP > POWER SYSTEM***

■ POWER SYSTEM ■	⇔	NOMINAL FREQUENCY: 60 Hz	Range: 25 to 60 Hz in steps of 1
	⇕	PHASE ROTATION: ABC	Range: ABC, ACB
	⇕	FREQUENCY AND PHASE REFERENCE: SRC 1	Range: SRC <n> (depending on model)

⇕	SIGNAL TO TRACK: Auto	Range: Auto, 3-ph VT, 1-ph VT, 3-ph CT, 1-ph CT
⇕	ALTERNATE FREQ AND PHS REFERENCE: None	Range: SRC 1, SRC 2, SRC 3, SRC 4, SRC 5, SRC 6
⇕	ALT SIGNAL TO TRACK: 3-ph VT	Range: 3-ph VT, 1-ph VT, 3-ph CT, 1-ph CT
⇧	FREQUENCY TRACKING: Enabled	Range: Disabled, Enabled

NOMINAL FREQUENCY

The power system ***NOMINAL FREQUENCY*** value is used as a default to set the digital sampling rate if the system frequency cannot be measured from available signals. This can happen if the signals are not present or are heavily distorted. Before reverting to the nominal frequency, the frequency tracking algorithm holds the last valid frequency measurement for a safe period of time while waiting for the signals to reappear or for the distortions to decay. When using a Process Bus Module and SV streams, the SV streams need to be defaulted before changing this setting, under ***Settings > Process Bus Module > SV Stream Config***. After changing the nominal frequency, restart the relay using ***Maintenance > Reboot Relay Command***.

PHASE ROTATION

The phase sequence of the power system is required to properly calculate sequence components and power parameters. The ***PHASE ROTATION*** setting matches the power system phase sequence and informs the relay of the actual system phase sequence, either `ABC` or `ACB`. CT and VT inputs on the relay, labeled as A, B, and C, must be connected to system phases A, B, and C for correct operation.

FREQUENCY AND PHASE REFERENCE

This setting determines which signal source is used for frequency tracking and phase angle reference. Within this source, a specific signal shall be selected for tracking frequency calculation and for the phase angle reference, and such selection will be determined by the ***SIGNAL TO TRACK*** setting below.

SIGNAL TO TRACK

This setting specifies the signal in a source to be used for tracking frequency calculation and for phase angle reference. When `Auto` is selected, the AC signal to be used in a source is prioritized based on the AC inputs configuration in this source, in which phase voltages takes precedence, followed by the auxiliary voltage, then phase currents, and finally ground current, as it was in legacy UR f/w releases. With `Auto`, the signal selection is static rather than dynamic, i.e. AC signals are selected, based upon the source configuration only, regardless of whether a particular signal is applied to the relay or not. If VT or CT is selected (3-ph VT, 1-ph VT, 3-ph CT, 1-ph CT), the AC signal to be used is directly based on this selection and will revert to nominal frequency if the selected signal is below 0.06pu.

For the three-phase selection, phase A is used for angle referencing (ANGLE REF = VA or IA). Clarke transformation of the phase signals is used for frequency metering and tracking (VFREQUENCY = (2VA - VB - VC) / 3) for better performance during fault, open pole, and VT and CT fail conditions.

Phase angle of the reference signal always displays zero degrees and all other phase angles are relative to this signal. If the pre-selected reference signal is not measurable at a given time, the phase angles are not referenced to any external AC signal and are referenced to the internal reference to continue maintaining proper phase relationship between all other measured AC signal. The phase angle referencing is done via a phase locked loop, which can synchronize independent UR-series relays if they have the same AC signal reference. This results in very precise correlation of phase angle indications between different UR series relays.

ALTERNATE FREQ AND PHS REFERENCE

This setting determines the alternative source for frequency tracking and phase angle reference. If the signal specified by the main ***FREQUENCY AND PHASE REFERENCE*** setting is lost, the reference will be switched to this alternative reference. switching between the main reference and the alternative reference is allowed (activated) only if the following conditions are true:

- Frequency tracking is enabled, AND
- The alternative reference is set to a source other than None, AND
- The selected signals between main and alternative ***FREQUENCY AND PHASE REFERENCE*** are different.

Switching is also allowed (activated) even if the same source is selected in both the ***FREQUENCY AND PHASE REFERENCE*** setting and in the ***ALTERNATE FREQ AND PHS REFERENCE*** setting, given that different signals are selected in the ***SIGNAL TO TRACK*** and ***ALT SIGNAL TO TRACK*** settings.

When the main source signal becomes available again, the relay will switch back to the main source.

ALT SIGNAL TO TRACK

This is the same as the ***SIGNAL TO TRACK*** setting in the main ***FREQUENCY AND PHASE REFERENCE*** setting, but the signal defined here is used for the ***ALTERNATE FREQ AND PHS REFERENCE*** setting. When the same source is selected for both main and alternate reference quantities, the signal selected in this setting must be different from the signal selected in the main reference, otherwise no switching is performed.

If neither main nor alternate signals are available, tracking frequency is reverting to nominal until either main or alternate signals are available and measurable.

FREQUENCY TRACKING

This enables or disables frequency tracking. It is only disabled in unusual circumstances. Please consult GE for special variable frequency applications.

> *Note:*
> *The frequency tracking feature functions only when the relay is in the* `Programmed` *mode. Otherwise, the metering values are available but can exhibit significant errors.*

9.5.3 SIGNAL SOURCES

Setting path: ***SETTINGS > SYSTEM SETUP > SOURCE <n>***

where n, number of sources depend on the model. Only Source 1 is shown here

■ SOURCE 1 ■	⇔	SOURCE 1 NAME: SRC 1	Range: up to 20 alphanumeric characters
	⇕	SOURCE 1 PHASE CT: None	Range: None, F1,... up to any 6 CTs. Only Phase CT inputs are displayed.
	⇕	SOURCE 1 GROUND CT: None	Range: None, F1,... up to any 6 CTs. Only Ground CT inputs are displayed.
	⇕	SOURCE 1 PHASE VT: None	Range: None, <relevant slot designation> Only phase voltage inputs are displayed
	⇕	SOURCE 1 AUX VT: None	Range: None, <relevant slot designation> Only auxiliary voltage inputs are displayed
	⇕	SRC 1 ALT PHASE CT: None	Range: None, F1,... up to any 6 CTs

⇕	SRC 1 ALT GROUND CT: None	Range: None, F1,... up to any 6 CTs
⇕	SRC 1 SWITCH ALT CT: Off	Range: FlexLogic operand
⇕	SRC 1 ALT PHASE VT: None	Range: None, <relevant slot designation>
⇕	SRC 1 ALT AUX VT: None	Range: None, <relevant slot designation>
⇧	SRC 1 SWITCH ALT VT: Off	Range: FlexLogic operand

Identical menus are available for each source. You can replace *SRC <n>* with any text up to 20 characters.

The first letter in the source identifier represents the module slot position. The number directly following this letter represents either the first bank of four channels (1, 2, 3, 4) called “1” or the second bank of four channels (5, 6, 7, 8) called “5” in a particular CT/VT module.

It is possible to select the sum of all CT combinations. The first channel displayed is the CT to which all others are referred. For example, the selection “F1+F5” indicates the sum of each phase from banks F1 and F5, scaled to whichever CT has the higher ratio. Selecting *None* hides the associated actual values.

The approach used to configure the AC sources consists of several steps:

- Specify the information about each CT input. This is the nominal primary and secondary current.
- Specify the information about each VT input. This is the connection type, ratio and nominal secondary voltage.
- Specify the configuration for each source, including specifying which CTs are summed together.

9.5.3.1 USER SELECTION OF AC PARAMETERS FOR COMPARATOR ELEMENTS

CT/VT modules automatically calculate all current and voltage parameters from the available inputs. You must select the specific input parameters to be measured by every element in the relevant settings menu. The internal design of the element specifies which type of parameter to use and provides a setting for source selection. In elements where the parameter can be either fundamental or RMS magnitude, such as phase time overcurrent, two settings are provided. One setting specifies the source, the second setting selects between fundamental phasor and RMS.

9.5.3.2 AC INPUT ACTUAL VALUES

The calculated parameters associated with the configured voltage and current inputs are displayed in the current and voltage sections of actual values. Only the phasor quantities associated with the actual AC physical input channels display here. All parameters contained within a configured source are displayed in the sources section of the actual values.

9.5.3.3 DISTURBANCE DETECTORS (INTERNAL)

The disturbance detector (ANSI 50DD) element is a sensitive current disturbance detector that detects any disturbance on the protected system. The 50DD function is used directly in some elements in the relay, for example VT Fuse Failure detector or Fault Report. It can also be used to supervise current-based elements to prevent maloperation as a result of the wrong settings or external CT wiring problem. A disturbance detector is provided for each source.

The 50DD function responds to the changes in magnitude of the sequence currents. The disturbance detector logic is as follows.

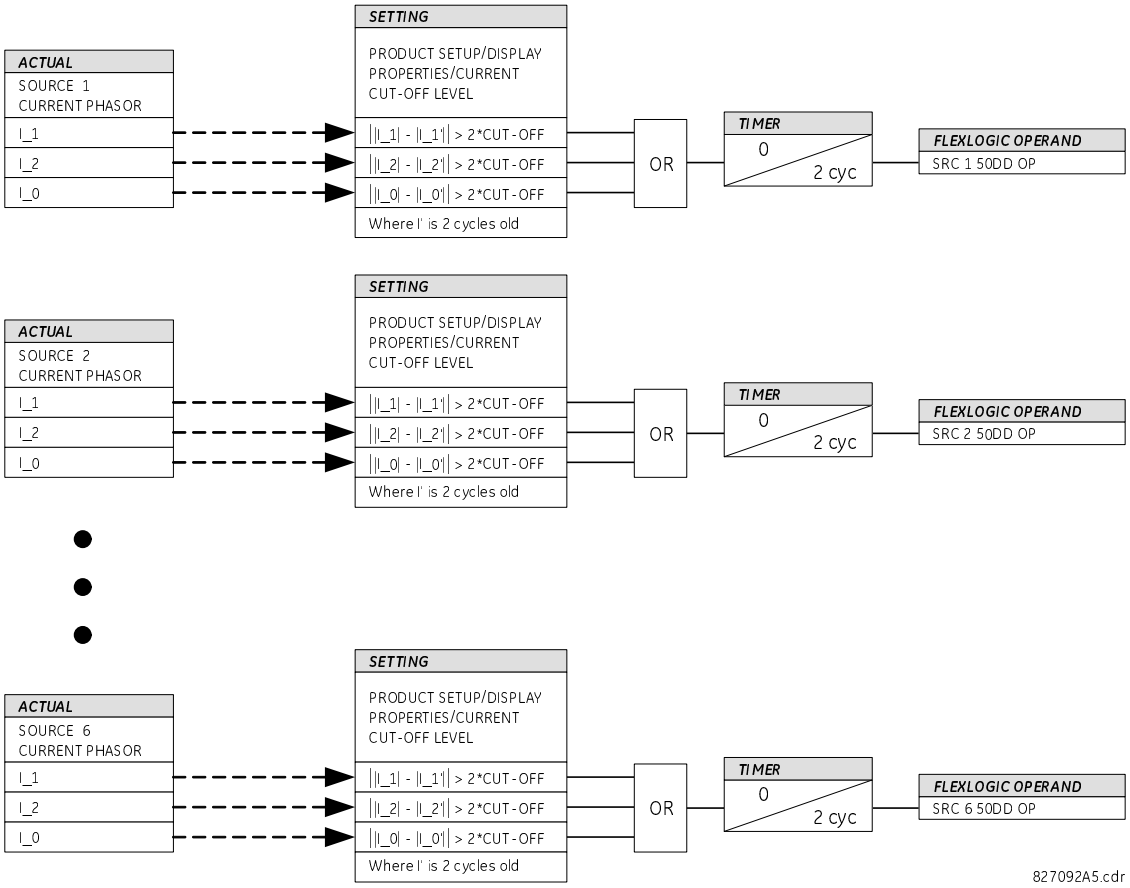

Figure 228: Disturbance detector logic (example using six sources)

The disturbance detector responds to the change in currents of twice the current cut-off level. The default cut-off threshold is 0.02 pu; thus by default the disturbance detector responds to a change of 0.04 pu. The metering sensitivity setting ***PRODUCT SETUP > DISPLAY PROPERTIES > CURRENT CUT-OFF LEVEL*** controls the sensitivity of the disturbance detector accordingly.

9.5.3.4 EXAMPLE FOR USE OF SOURCES

An example of the use of sources is shown in the following figure. A relay can have the following hardware configuration:

	Increasing slot position letter >		
UR	**CT/VT module 1**	**CT/VT module 2**	**CT/VT module 3**
B30, B90, C70, F35, N60, T35	8 CTs	4 CTs, 4 VTs	4 CTs, 4 VTs
C60, C95, D60, G30, G60, L30, L90, M60, T60	CTs	VTs	not applicable

This configuration can be used on a two-winding transformer, with one winding connected into a breaker-and-a-half system. The following figure shows the arrangement of sources used to provide the functions required in this application, and the CT/VT inputs that are used to provide the data.

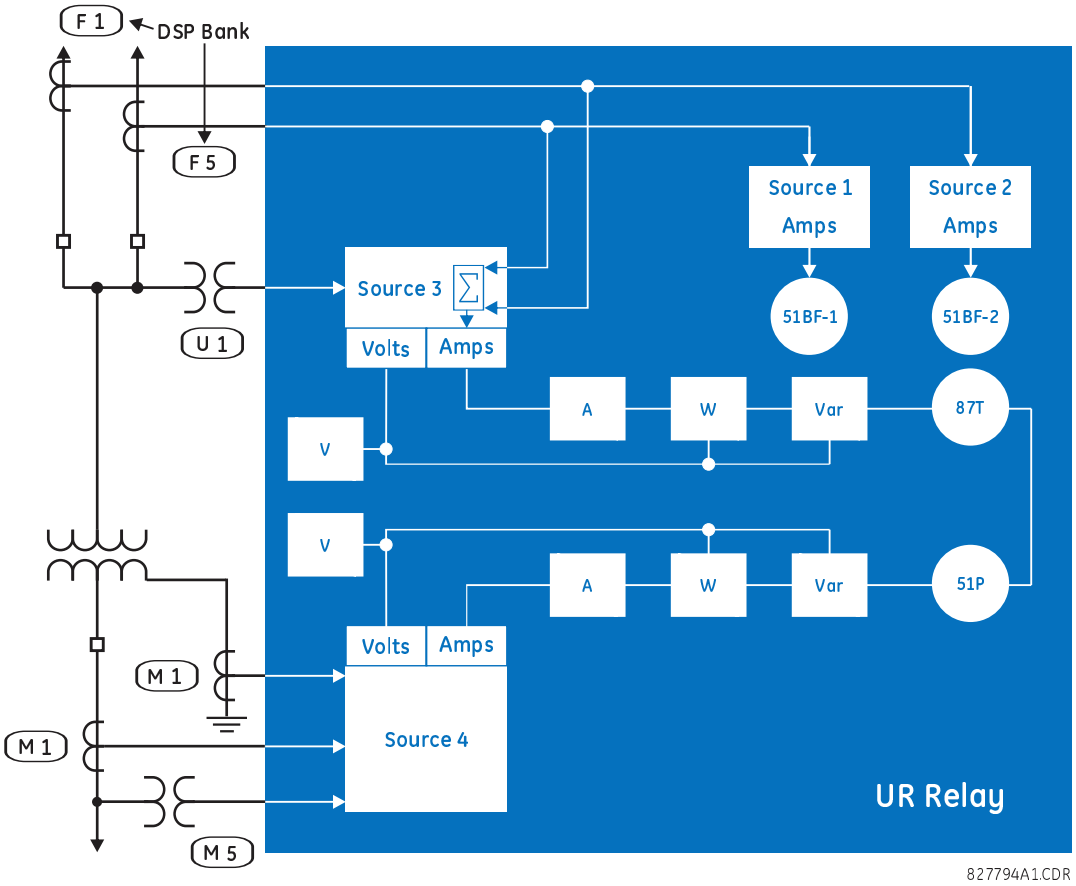

Figure 229: Example of use of sources

	Y LV	D HV	AUX
	SRC 1	SRC 2	SRC 3
Phase CT	M1	F1+F5	None
Ground CT	M1	None	None
Phase VT	M5	None	None
Aux VT	None	None	U1

9.5.3.5 SOURCE SWITCHING

The UR supports current and voltage signals input from both main and alternate CTs and VTs, with user-defined switching capability. This is beneficial in applications, where the relay can provide protection when the main CT or VT is not available due to station re-configuration. The following figure shows examples of VT switching from VT1 to VT2 when Bus 1 is de-energized, and the line is energized via Bus 2. The CT switching example in (b) shows the connection of the bus transfer breaker CT to the line relay, when the line is energized via the transfer bus. This could be for example, when the main line breaker is taken out of commission for maintenance. In this case, the relay senses current from either CT 1 when the line is energized via main line breaker or CT 2 when the line is energized via the transfer bus breaker.

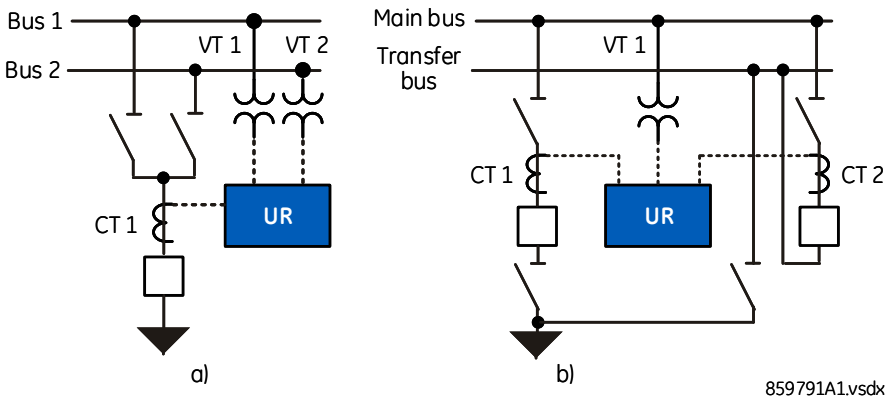

Figure 230: Examples of VTs (a) and CTs (b) switching from the main to alternate

The following figure shows the logic diagram for switching from main banks to alternate banks.

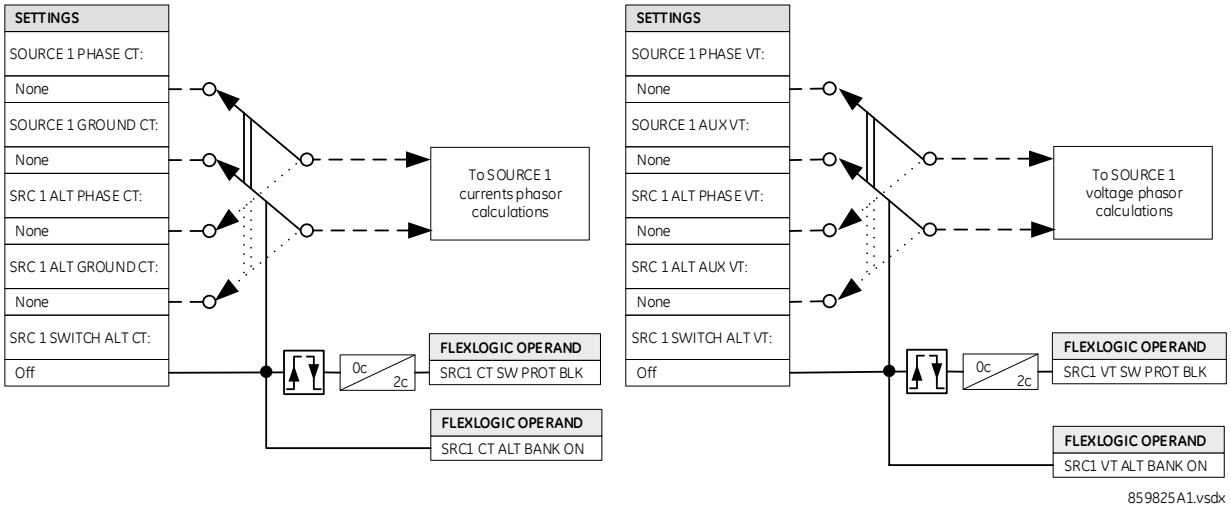

Figure 231: Logic diagram of switching CTs and VTs from the main to alternate banks

When a FlexLogic operand assigned to the setting ***SRC 1 SWITCH ALT CT/VT*** is at logical 0, the analog data is processed from the main CT and VT analog data banks. When this operand is logical 1, the analog data is processed from the alternate CT and VT analog data banks.

Note that:

- Banks assigned to the same function for the main and alternate input data must have the same CT and VT nominal values and connections. If this is not the case, a warning is generated and switching functionality is prohibited. For example, banks assigned to the ***PHASE CT*** and ***ALT PHASE CT*** must have same primary and secondary CT values. The ground CT input has to be of the identical type.
- During switching to/from the main CT/VT input data from/to the alternate input data and vice versa, all relay functions are blocked for two power cycles, and metering data is not updated.
- CT bank switching is allowed if both main and alternate CT banks have the exact same combination for CT summation.
- Use Non-volatile Latches if you need the switching state to be remembered.
- Since switching occurs in both the Phase and Ground CT, it is possible to keep the same set under both the main source and alternate source, but a different set for the ground/aux signal.

9.5.4 BREAKERS

The breaker control element contains the auxiliary logic for status and serves as the interface for opening and closing of a circuit breaker from protection, autoreclose, SCADA, or through the front panel interface. The breaker control element can be used to create interlocking functionality. For greater security in determination of the breaker position, both the 52/a and 52/b auxiliary contacts are used with reporting of the discrepancy between them.

To use this element, configure the contact outputs that trip and close the breaker to use FlexLogic operands BREAKER 1 OFF CMD (or BREAKER 1 TRIP A/B/C in the case of single-pole tripping) and BREAKER 1 ON CMD, and configure the breaker control element inputs as described here.

> *Note:*
> *Breaker control element 1 and Breaker control element 2 are permanently attached to Autoreclose element functions BKR1 and BKR2 respectively.*

> *Note:*
> *Breaker control element 1 is permanently attached to the Trip Output element.*

Setting path: ***SETTINGS > SYSTEM SETUP > BREAKERS***

■ BREAKERS ■	⇔	■ COMMON SETTINGS ■
	⇧	■ BREAKER <n> ■

The ***SYSTEM SETUP > BREAKERS*** menu has two sub-menus:

- COMMON SETTINGS
- BREAKER <n>, where n = 1 to 6

COMMON SETTINGS

There is only one common setting amongst circuit breakers; ***BKR INTERM & BAD ST TIMERS***:

This can be set to `Common` or `Distinct`. When set to `Common`, the breaker element considers both `00` and `11` states of 52a and 52b as an intermediate state and when the Toperate timer expires, declares the breaker as bad status. When set to `Distinct"` the breaker element considers `00` state of 52a and 52b as an intermediate state and `11` as bad status. When the breaker status detected is `00`, the breaker element waits for the $T_{operate}$ timer to expire before declaring the intermediate state. When the breaker status detected is `11`, the breaker element waits for the Bad ST $T_{suppress}$ timer to expire before declaring the bad state. See breaker logic diagrams 2 and 4.

BREAKER <n>

Each breaker has the following settings. Only Breaker 1 is shown here.

Setting path: ***SETTINGS > SYSTEM SETUP > BREAKERS > BREAKER 1(6)***

■ BREAKER 1 ■	⇔	BREAKER 1 FUNCTION: Disabled	Range: Disabled, Enabled
	⇕	BREAKER 1 NAME: Bkr 1s	Range: up to six alphanumeric characters
	⇕	BREAKER 1 MODE: 3-Pole	Range: 3-Pole, 1-Pole
	⇕	BREAKER1 ΦA/3P DPS INP:Off	Range: Off, RxGOOSE DPS 1, RxGOOSE DPS 2…

⇕	BREAKER1 ΦA/3P OPND: Off	Range: FlexLogic operand
⇕	BREAKER1 ΦA/3P CLSD: Off	Range: FlexLogic operand
⇕	BREAKER1 ΦB DPS INP:Off	Range: Off, RxGOOSE DPS 1, RxGOOSE DPS 2…
⇕	BREAKER 1 ΦB OPENED: Off	Range: FlexLogic operand
⇕	BREAKER 1 ΦB CLOSED: Off	Range: FlexLogic operand
⇕	BREAKER1 ΦC DPS INP:Off	Range: Off, RxGOOSE DPS 1, RxGOOSE DPS 2…
⇕	BREAKER 1 ΦC OPENED: Off	Range: FlexLogic operand
⇕	BREAKER 1 ΦC CLOSED: Off	Range: FlexLogic operand
⇕	BREAKER 1 ALARM PDisc DELAY: 0.000 s	Range: 0.000 to 65.535 s in steps of 0.001
⇕	BREAKER 1 EXT ALARM: Off	Range: FlexLogic operand
⇕	BREAKER 1 RACKED-IN: Off	Range: FlexLogic operand
⇕	BREAKER 1 OUT OF SV: Off	Range: FlexLogic operand
⇕	BREAKER 1 OPEN CMD: Off	Range: FlexLogic operand
⇕	BRK1 COMMS OPEN CMD: Off	Range: FlexLogic operand
⇕	BREAKER 1 CLOSE CMD: Off	Range: FlexLogic operand
⇕	BRK1 COMMS CLS CMD: Off	Range: FlexLogic operand
⇕	BREAKER1 PB CONTROL: Off	Range: FlexLogic operand
⇕	BREAKER1 TOPERATE: 70 ms	Range: 0 to 65535 ms in steps of 1
⇕	BREAKER 1 BAD ST TSUPPRESS: 0 ms	Range: 0 to 65535 ms in steps of 1
⇕	MANUAL CLOSE RECAL1 TIME: 0.000 s	Range: 0.000 to 65.535 s in steps of 0.001
⇕	BREAKER 1 OPEN SEAL-IN: 0.000 s	Range: 0.000 to 65.535 s in steps of 0.001
⇕	BREAKER 1 AR BLOCK: Disabled	Range: Disabled, Enabled
⇕	BREAKER 1 BLK OPEN: Off	Range: FlexLogic operand
⇕	BREAKER 1 BLK CLOSE: Off	Range: FlexLogic operand

BRK1 BLK BYPASS: Disabled	Range: Disabled, Enabled
BREAKER 1 TAGGING: Disabled	Range: Disabled, Enabled
BREAKER 1 SUBSTITUTN: Disabled	Range: Disabled, Enabled
BREAKER 1 EVENTS: Disabled	Range: Disabled, Enabled
BRK1 CILO INTERLOCK GFP BYPASS: Disabled	Range: Disabled, Enabled
BREAKER 1 LOCAL: Off	Range: FlexLogic operand
BRK1 BLK ML CMD IN LOCAL: Disabled	Range: Disabled, Enabled
BRK1 CSWI LOC STAT: Off	Range: FlexLogic operand
BRK1 STATION AUTHOR: Off	Range: FlexLogic operand
BREAKER 1 OPEN INTERLOCK: Off	Range: FlexLogic operand
BREAKER 1 CLOSE INTERLOCK: Off	Range: FlexLogic operand
BREAKER 1 SYNCCHECK CLOSE: Off	Range: FlexLogic operand
BREAKER 1 POS-REACHED CHECK: Enabled	Range: Enabled, Disabled

For relays that support 9-2LE, use ***SETTINGS > SYSTEM SETUP > BREAKERS > BAY1(28) BREAKER***.

The following settings are available for each breaker control element.

BREAKER 1 FUNCTION

This setting enables and disables the operation of the breaker 1 control feature.

BREAKER 1 NAME

This setting allows you to assign a user-defined name (up to six characters) to the breaker. This name is used in flash messages related to breaker 1.

BREAKER 1 MODE

This setting sets either `3-Pole` mode, where all breaker poles are operated simultaneously, or `1-Pole` mode, where all breaker poles are operated independently.

BREAKER1 ΦA/3P DPS INP

This setting selects a double point status input (RxGOOSE# DPS Input) that is subscribed via GOOSE. Each received RxGOOSE# DPS Input consist of 2 bits. The derived switch status is shown in the logic diagram.

When the IEC61850 RxGOOSE# DPS is mapped to ***BREAKER1 ΦA/3P DPS INP***, the switch status (Open/Close/Intermediate/Bad) will be based on the RxGOOSE DPS # value.

If the ***BREAKER1 ΦA/3P DPS INP*** selects a RxGOOSE DPS Input:

- the respective ***BREAKER1 ΦA/3P OPND*** and ***BREAKER1 ΦA/3P CLSD*** settings are not considered.
- the respective ***BREAKER T OPERATE*** and ***BREAKER BAD ST TSUPPRESS*** settings are also not considered in the receiving relay

BREAKER1 ΦA/3P OPND

This setting selects an operand (usually a contact input), which is for a normally-closed 52/b status input. This activates a logic 1 when the breaker is open. If a separate 52/b contact input is not available, then the inverted 52/a status signal or the inverted ***BREAKER 1 CLOSED*** status signal can be used.

BREAKER1 ΦA/3P CLSD

This setting selects an operand (usually a contact input) connected to a breaker auxiliary position tracking mechanism. This input is for a normally-open 52/a status input that creates a logic 1 when the breaker is closed. If the ***BREAKER 1 MODE*** setting is selected as `3-Pole`, this setting selects a single 52/a input as the operand used to track the breaker open or closed position. If the mode is selected as `1-Pole`, the input mentioned is used to track phase A and the ***BREAKER 1 ΦB*** and ***BREAKER 1 ΦC*** settings select operands to track phases B and C, respectively.

BREAKER1 ΦB DPS INP

If the mode is selected as three-pole, this setting has no function. If the mode is selected as single-pole, this input is used to track the switch phase B position as outlined for phase A.

BREAKER1 ΦB OPENED

In three-pole mode, this setting has no function. In single-pole mode, this input is used to track the breaker phase B opened position as outlined for phase A.

BREAKER1 ΦB CLOSED

In three-pole mode, this setting has no function. In single-pole mode, this input is used to track the breaker phase B closed position as outlined for phase A.

BREAKER1 Φc DPS INP

If the mode is selected as three-pole, this setting has no function. If the mode is selected as single-pole, this input is used to track the switch phase C position as outlined for phase A.

BREAKER1 ΦC OPENED

In three-pole mode, this setting has no function. In single-pole mode, this input is used to track the breaker phase C opened position as outlined for phase A.

BREAKER1 ΦC CLOSED

In three-pole mode, this setting has no function. In single-pole mode, this input is used to track the breaker phase C closed position as outlined for phase A.

BREAKER 1 ALARM PDisc DELAY

This setting specifies the delay interval during which a conflict of status among the pole position tracking operands does not declare a pole discrepancy. This allows for non-simultaneous operation of the poles. If single-pole tripping and reclosing is used, the breaker can trip unsymmetrically for faults. In this case, the minimum alarm delay setting must exceed the maximum time required for fault clearing and reclosing by a suitable margin.

BREAKER 1 EXT ALARM

This setting selects an operand, usually an external contact input connected to a breaker alarm reporting contact. While the selected operand is active, the BREAKER 1 TROUBLE operand is activated.

BREAKER 1 RACKED-IN

This setting selects a contact input to show whether the breaker is racked-in or racked-out. The racked-in or racked-out status is used to indicate dynamically the status of breaker symbol, only applied in the single-line diagram on the graphical front panel. If this setting is set to Off, the racked status is not considered.

BREAKER 1 OUT OF SV

This setting selects an operand indicating that breaker 1 is out-of-service.

BREAKER 1 OPEN CMD

This setting selects an operand that initiates a Breaker 1 open/trip command. The command is not executed when blocked by the operand assigned to ***BREAKER 1 BLK OPEN*** setting.

BRK1 COMMS OPEN CMD

This setting selects an operand that initiates a Breaker 1 open command. The setting is intended for commands received via communication protocols (DNP3, IEC104 and Modbus) to be supervised by IED Local/Remote status. The command is not executed if the relay is in local mode or blocked by the operand assigned to the ***BREAKER 1 BLK OPEN*** setting.

BREAKER 1 CLOSE CMD

This setting selects an operand that initiates a Breaker 1 close command. The command is not executed when blocked by an operand assigned to the ***BREAKER 1 BLK CLOSE*** setting.

BKR 1 COMMS CLS CMD

This setting selects an operand that initiates a Breaker 1 close command. The setting is intended for commands received via communication protocols (DNP3, IEC104 and Modbus) to be supervised by IED Local/Remote status. The command is not executed if the relay is in local mode or blocked by the operand assigned to the ***BREAKER 1 BLK CLOSE*** setting.

BREAKER 1 PB CONTROL

When the selected operand value is high, local breaker control operations are allowed from front panel pushbuttons.

BREAKER 1 TOPERATE

This setting specifies the required interval to overcome transient conflict between the 52/a and 52/b auxiliary contacts during breaker operation. If transient conflict still exists after this time has expired, the BREAKER 1 BAD STATUS FlexLogic operand is asserted for alarm or blocking purposes.

BREAKER 1 BAD ST TSUPPRESS

When the ***BKR INTERM & BAD ST TIMERS*** setting is set to `Distinct`, this setting specifies the required interval to overcome the transient state of `11` during the breaker operation. If the `11` state still exists after this time, the BREAKER 1 BAD STATUS FlexLogic operand is asserted. When the ***BKR INTERM & BAD ST TIMERS*** setting is set to `Common`, this setting is not used.

MANUAL CLOSE RECAL1 TIME

This setting specifies the seal-in time of the close commands due to an operator-initiated manual close command to the circuit breaker.

BREAKER 1 OPEN SEAL-IN

This setting specifies the seal-in time of the three-pole open command initiated by either the Trip Out element or a manual open command to the circuit breaker.

BREAKER 1 AR BLOCK

When enabled, this setting allows the graphical front panel to issue a ***BLOCK AR*** command and generate the BREAKER 1 BLK RCLS operand, which blocks the breaker 1 close command from the Autoreclose element. The Autoreclose element operates for BKR1 and BKR2 only. Once ***BLOCK AR*** is asserted from the front panel, breaker reclosing is not allowed. Note that the Autoreclose element is not automatically inhibited by ***BLOCK AR*** from the front panel. If the autoreclose scheme needs to be inhibited, set setting ***AR BLOCK BKR1*** or ***AR BLOCK*** in the Autoreclose element with the BREAKER 1 BLK RCLS operand.

BREAKER 1 BLK OPEN

This setting selects an operand that prevents initiation of Breaker 1 open and individual phase trip commands. This setting can be used for blocking circuit breaker tripping for instance when breaker monitoring detects conditions such as low SF6 gas density.

BREAKER 1 BLK CLOSE

This setting selects an operand that prevents initiation of Breaker 1 close commands. This setting can be used for blocking circuit breaker closing, for instance to prevent closing into a closed ground switch.

If single-pole tripping and reclosing is used, the breaker can trip unsymmetrically for faults. In this case, the minimum alarm delay setting must exceed the maximum time required for fault clearing and reclosing by a suitable margin.

BRK1 BLK BYPASS

This setting is only available for relays with a graphical front panel. When enabled, this setting allows the graphical front panel to bypass breaker 1 blocking. When asserted, ***BREAKER 1 BLK OPEN*** and ***BREAKER 1 BLK CLOSE*** settings are bypassed.

BREAKER 1 TAGGING

This setting is only available for relays with a graphical front panel. Breaker tagging is used to block certain operation when it is tagged for safety purposes. No other action is needed after enabling the function; it is handled internally where certain functions are blocked.

Set to `Enable No Override` to allow the graphical front panel or IEC 61850 MMS control to tag breaker 1. When tagged from the graphical front panel, tagging can be removed only from the graphical front panel, and an attempt to remove tagging using IEC 61850 MMS control results in a negative response (-Rsp). When tagged from IEC 61850 MMS control, tagging can be removed only by MMS control.

Set to `Enable With Override` to allow the graphical front panel or IEC 61850 MMS control to tag breaker 1. When tagged from the graphical front panel, tagging can be removed only from the graphical front panel, and an attempt to remove tagging using IEC 61850 MMS control results in a negative response (-Rsp). When tagged from IEC 61850 MMS control, tagging can be removed by MMS control or from the graphical front panel. That is, the graphical front panel has an override function.

When tagged, the following operations are disabled:

- Pushbutton open/close
- IEC 61850 open/close
- Autoreclose command issued by the Autoreclose element (if applicable to model)
- Close command initiated by BREAKER 1 CLOSE setting.

The trip command issued by the ***Trip Out*** element or ***BREAKER 1 OPEN*** setting is not affected.

BREAKER1 SUBSTITUTN

This setting is only available for relays with a graphical front panel. When enabled, this setting allows the graphical front panel/IEC 61850 to substitute breaker 1 status. When substituted, breaker 1 control open/close status is forced to the substituted value.

BRK1 CILO INTRLK TO LOCAL CTRL

When enabled, this setting allows CILO interlock to apply to front panel and FlexLogic operand controls. This setting is available only if the order code includes IEC 61850.

BRK1 CILO INTERLOCK GFP BYPASS

When enabled, this setting allows the graphical front panel to bypass the CILO interlock for front panel and FlexLogic operand controls. This setting is available only if the order code includes IEC 61850 and graphical front panel.

BREAKER 1 LOCAL

This setting selects an operand that indicates the Breaker in the switch yard is in Local or Remote mode. When the operand value is set, it indicates that the Breaker is in Local mode. You set this setting using the EnerVista software or with an SCL file.

BRK1 BLK MNL CMD IN LOCAL

When this setting is enabled, and the BREAKER 1 LOCAL operand state is logic `1` (i.e. the Breaker is in Local mode and Bkr0XCBR1.Loc is TRUE), manual commands originating from the front panel pushbuttons, graphical front panel and ***BREAKER 1 OPEN/CLOSE CMD*** are blocked. When disabled, manual commands originating from the relay are allowed even when the Breaker is in Local mode. This setting is available only if the order code includes IEC 61850.

BKR1 CSWI LOC STAT

This setting selects an operand that indicates the breaker residing in that bay is in Local or Remote mode. When the operand state is logic `1`, the bay is considered to be in Local mode, otherwise it is considered to be in Remote mode. The operand status is modeled in the IEC 61850 server using the respective breaker's CSWI Loc data object and you should refer to the operand status in the Control Authority table to determine the control authority for different levels. This setting is available only if the order code includes IEC 61850.

BKR1 STATION AUTHOR

This setting selects an operand that indicates the Station level authority status. The operand status is modeled in the IEC 61850 server using the respective breaker's CSWI LocSta data object the user should refer to the operand status in the Control Authority table to determine the control authority for different levels. This setting is available only if the order code includes IEC 61850.

BREAKER 1 OPEN INTERLOCK

This setting selects an operand that indicates the interlock status for the Breaker Open commands. This operand state is mapped directly to the IEC 61850 BkrCILO1.EnaOpn.stVal, which is used to reject the IEC 61850 open command when the selected operand state is at logic `0` (BkrCILO1.EnaOpn.stVal is set to false). However, the IEC 61850 client can choose to check or skip the interlock condition to execute the command using the `Check` parameter. In addition, the interlock condition can be applied to the local commands, which can originate from the front local HMI, front panel push buttons, graphical front panel (GFP) and FlexLogic Operands assigned to the ***BREAKER 1 OPEN CMD*** setting. This is achieved by enabling ***BRK1 CILO INTRLK TO LOCAL CTRL***. This setting is available only if the order code includes IEC 61850.

BREAKER 1 CLOSE INTERLOCK

This setting selects an operand that indicates the interlock status for the Breaker Open commands. This operand state is mapped directly to the IEC 61850 BkrCILO1.EnaCls.stVal, which is used to reject the IEC 61850 close command when the selected operand state is at logic `0` (BkrCILO1.EnaCls.stVal is set to false). However, the IEC 61850 client can choose to check or skip the interlock condition to execute the command using the `Check` parameter. In addition, the interlock condition can be applied to the local commands, which can originate from the front local HMI, front panel push buttons, graphical front panel (GFP) and FlexLogic Operands assigned to the ***BREAKER 1 CLOSE CMD*** setting. This is achieved by enabling ***BRK1 CILO INTRLK TO LOCAL CTRL***. This setting is available only if the order code includes IEC 61850.

BREAKER 1 SYNCCHECK CLOSE

This setting selects an operand that indicates the status of the synchrocheck function of the Breaker. When the operand value is set, the remote commands from IEC 61850 client are rejected if the IEC 61850 client set the synchrocheck bit in the `Check` parameter. This setting is only available if the order code includes IEC 61850.

BREAKER 1 POS-REACHED CHECK

When enabled, the IEC 61850 control value is checked for current Breaker status and is rejected if the command value (Open/Close) from IEC 61850 client match with the present Breaker status. When disabled, the current Breaker status is not verified to accept the control. This setting is only available if the order code includes IEC 61850.

> *Note:*
> *Before software release version 7.90, **ST.LOC OPERAND**, **INTERLOCK OPN**, **INTERLOCK CLS** and **SYNCCHECK CLOSE** settings were available in IEC 61850 configurator under **System Setup > Breaker**. From version 7.90 onwards, the above mentioned settings were removed from the IEC 61850 configurator and merged with the Breaker settings screen under **Settings > System Setup > Breakers** (outside the IEC 61850 configurator). Also, the name of the setting **ST.LOC OPERAND** has been changed to **LOCAL**.*

> *Note:*
> ***BREAKER 1 LOCAL, INTERLOCK OPEN, INTERLOCK CLOSE, SYNCCHECK CLOSE** settings are not available on the front panel and can be configured either from EnerVista Software or via SCL files. Refer to the MICS document online for respective settings modeling in SCL files. **BREAKER 1 POS-REACHED CHECK** is only configurable via EnerVista software.*

9.5.4.1 CONTROL AUTHORITY

Within the substation, control commands to the primary equipment, such as the breaker or disconnect switch, can originate from one of three levels: Station, Remote or Bay.

- Station level commands are those originating from either the substation gateway or from the station HMI
- Remote commands are from the remote Network Control Center (NCC).
- Bay level commands, are commands originating from bay devices such as bay controllers (e.g. C264) or IEDs (protection relays), either using 61850 control services or using non-61850 control methods (front panel pushbuttons, graphical front panel or commands initiated through FlexOperands).

Under certain operational conditions, such as during maintenance, it is necessary to block commands from one or more of these levels. The local/remote control feature (described in IEC61850 7-4: Annex B) allows you to enable or disable control authority from one or more of the three levels, as illustrated in the below table. IEC61850 commands originating from the various levels are differentiated using the Origin.OrCat attribute value in the 61850 command. The IEC61850 7-4 Local/Remote table is extended with Bay level non-61850 commands and those commands are only allowed when the Bay level has the control authority.

	Switch	Bay Control				Command from			
						Bay		Station	NCC
		Mode of switching authority for local control	Local Control Behavior	Control Authority At Station Level	Manual Control at Switch (process)		orCat		
BKR1 BLK MNL CMD IN LOCAL	XCBR.LocXSWI.Loc	LLN0.MltLev	CSWI.Loc	CSWI.LocSta		Non 61850 Bay Control	Local Ctl (Bay)	Station	Remote
Enabled	T	F	n.a.	n.a.	AA	NA	NA	NA	NA
Disabled	T	F	n.a.	n.a.	AA	AA	NA	NA	NA
n.a.	F	F	T	n.a.	AA	AA	AA	NA	NA
n.a.	F	F	F	T	AA	NA	NA	AA	NA
n.a.	F	F	F	F	AA	NA	NA	NA	AA
Enabled	T	T	n.a.	n.a.	AA	NA	NA	NA	NA
Disabled	T	T	n.a.	n.a.	AA	AA	NA	NA	NA
n.a.	F	T	T	n.a.	AA	AA	AA	NA	NA
n.a.	F	T	F	T	AA	AA	AA	AA	NA
n.a.	F	T	F	F	AA	AA	AA	AA	AA

Key

- n.a. - not applicable
- AA - Always Allowed
- NA - Not Allowed
- Non-61850 Bay Control - Any manual control from the relay, i.e. from the front panel, the relay push buttons or a FlexOperand initiated command.
- Manual Control at Switch (process) - Control external to the IED, e.g. the breaker may be controlled directly from the control panel.
- Cells highlighted in gray are not defined in the standard and reflect UR's commitment to maintaining backwards compatibility

9.5.4.2 DUAL BREAKER CONTROL LOGIC

The following diagrams show the dual breaker control logic:

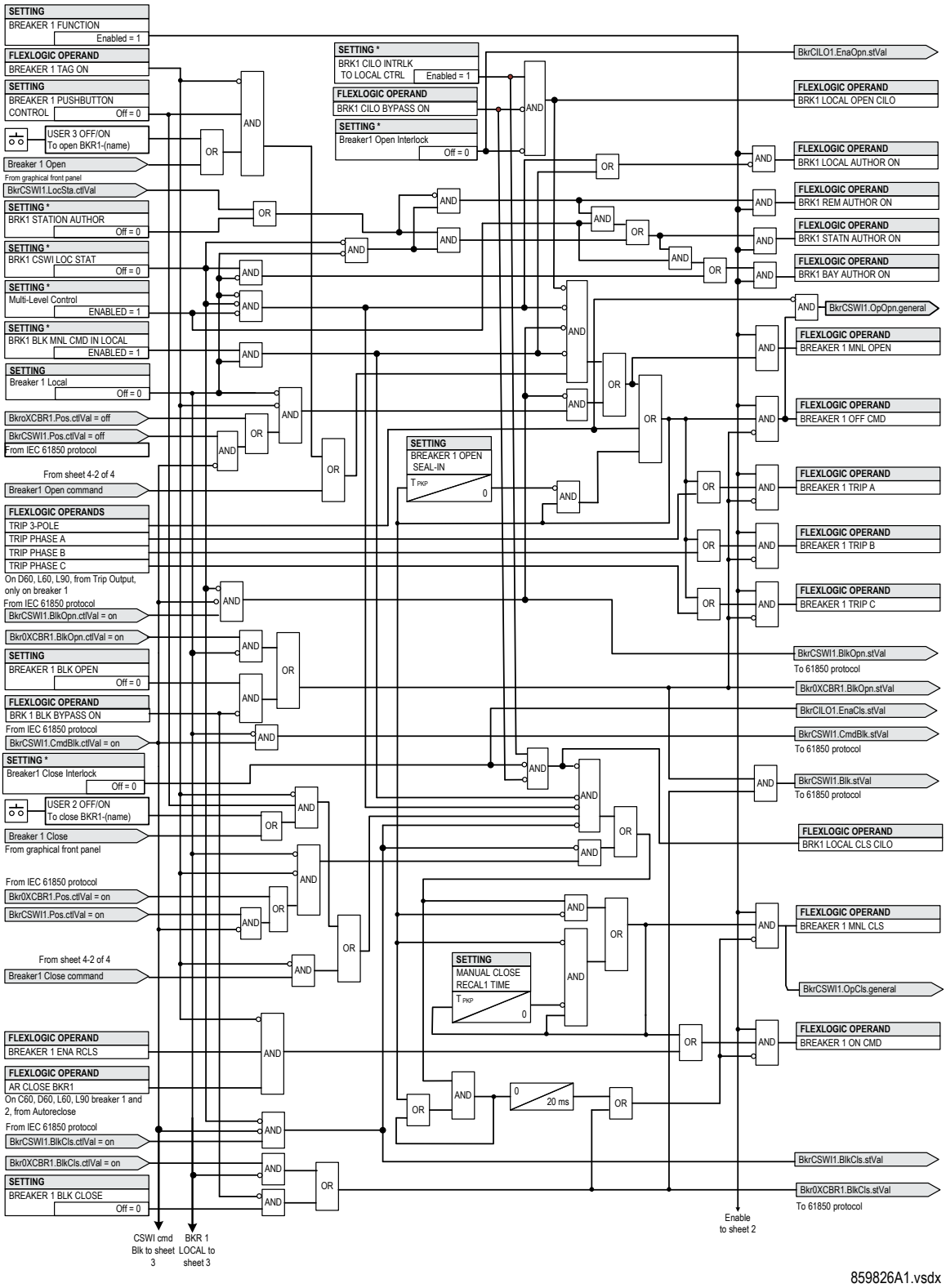

Figure 232: Dual breaker control logic (Sheet 1 of 5)

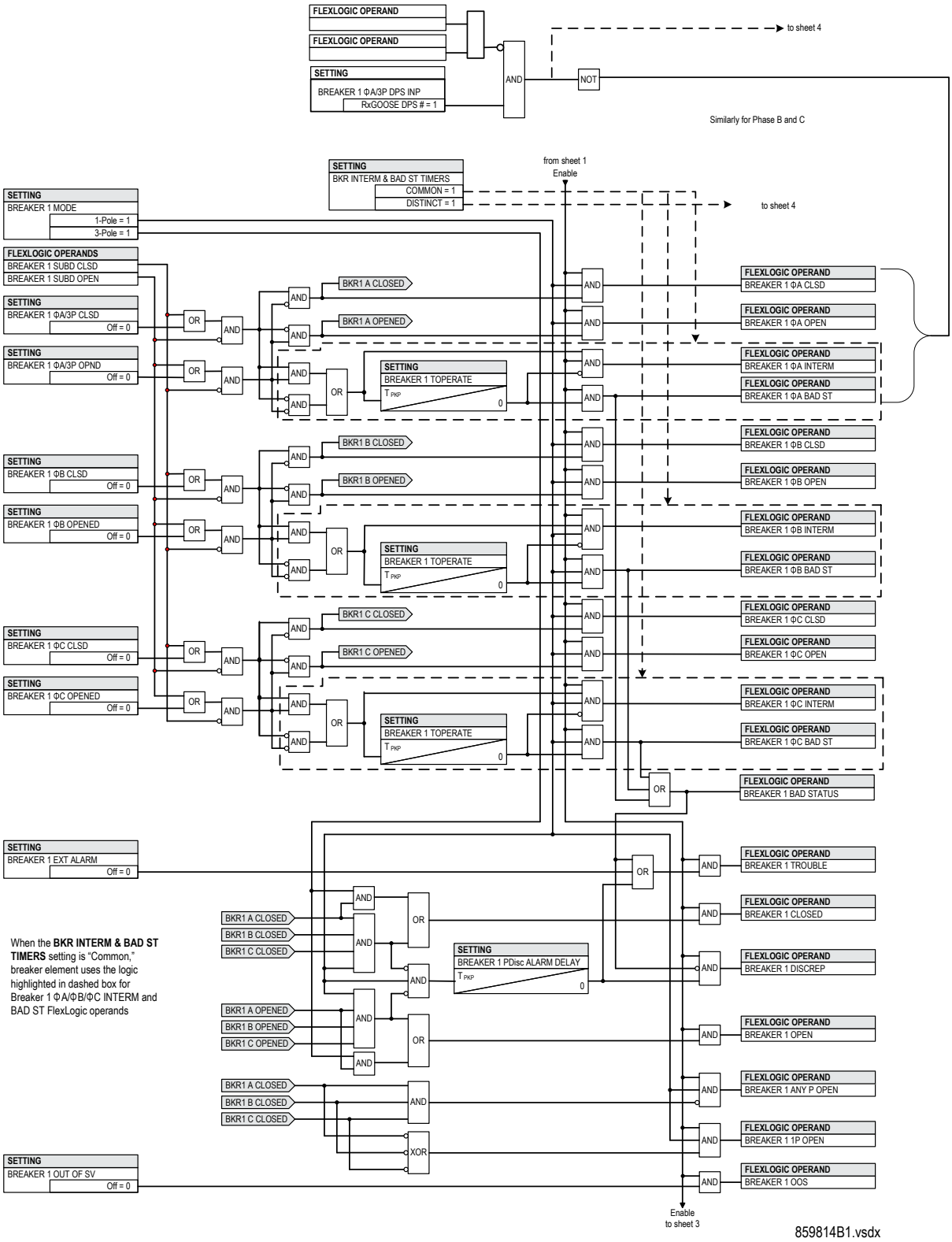

Figure 233: Dual breaker control logic (Sheet 2 of 5)

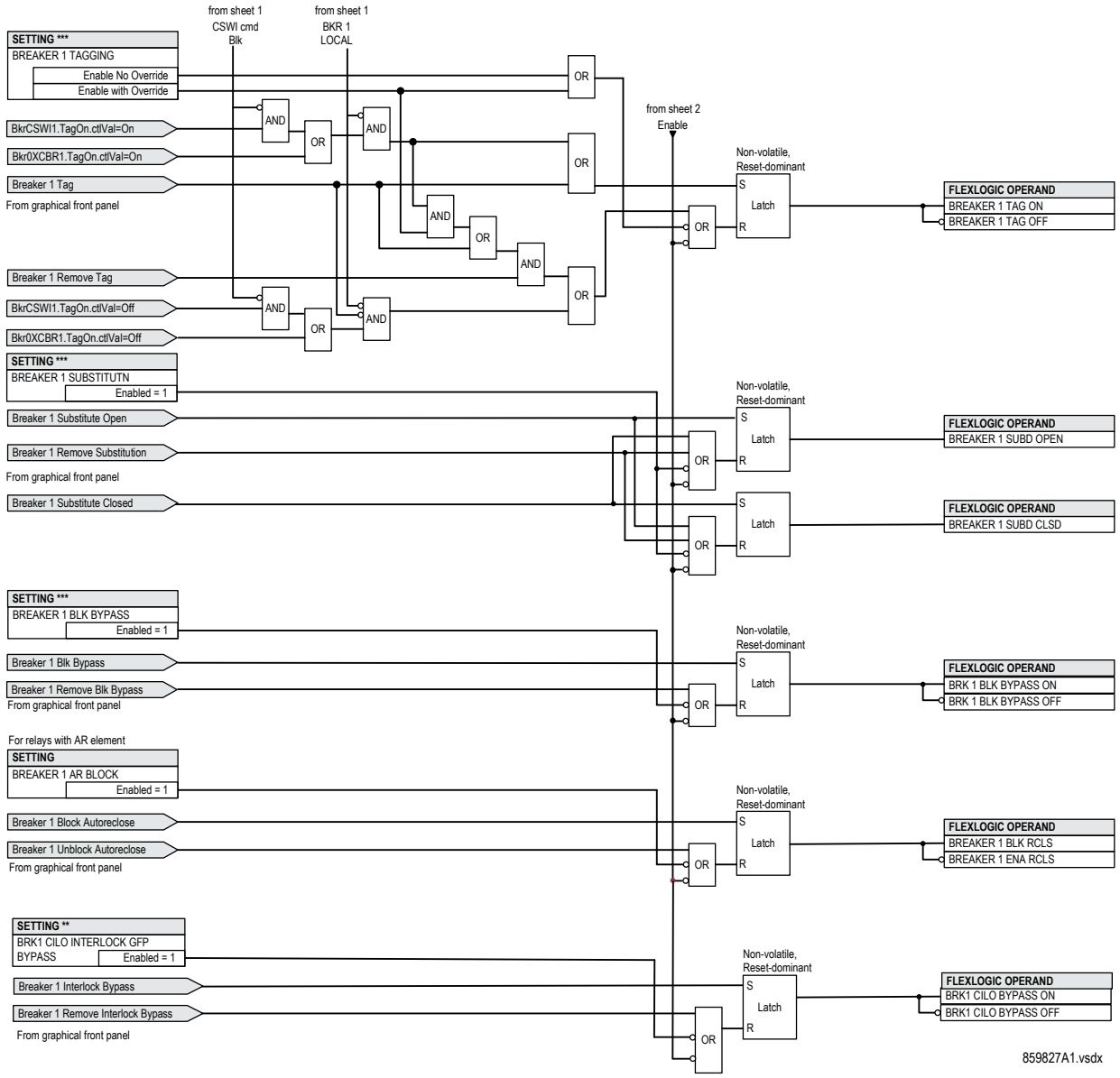

Figure 234: Dual breaker control logic (Sheet 3 of 5)

The breaker element has direct hard-coded connections to the IEC 61850 model as shown in the logic diagram. This allows remote open/close operation of each breaker, using either CSWI or XCBR IEC 61850 logical nodes. IEC 61850 'select-before-operate' functionality, local/remote switch functionality, along with blocking of open/close commands are provided. Note that the dwell time for the IEC 61850 trip and close commands shown is one protection pass only. To maintain the close/open command for a certain time, do so by setting the seal-in timers ***BREAKER 1 OPEN SEAL-IN*** and ***MANUAL CLOSE RECAL1TIME***, on the contact outputs using the ***Seal-in*** setting, in the Trip Output element, and/or in FlexLogic.

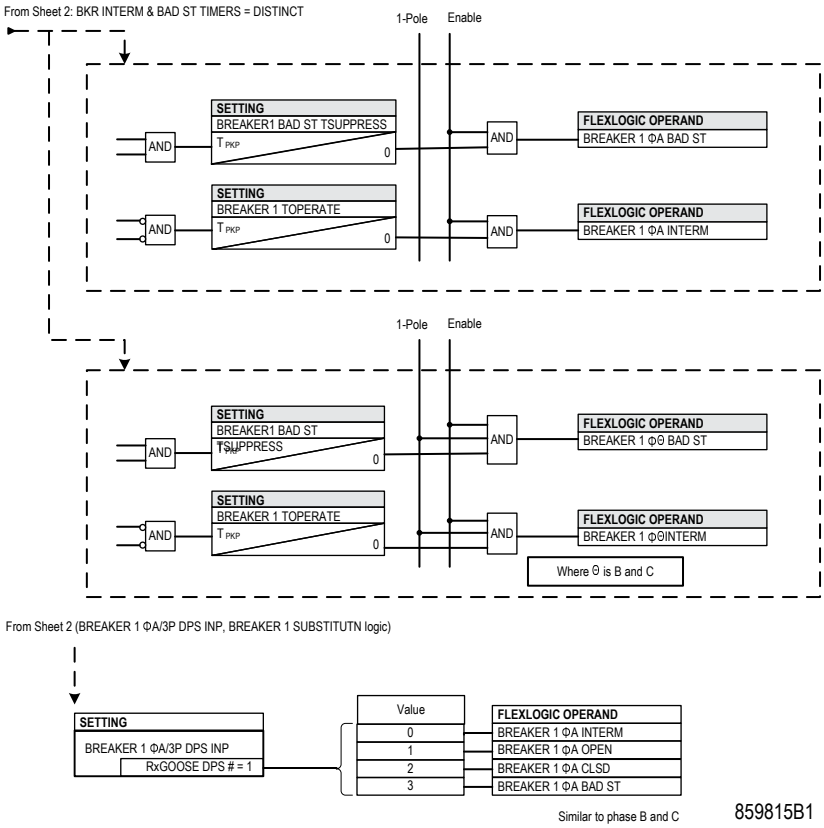

Figure 235: Dual breaker control logic (Sheet 4 of 5)

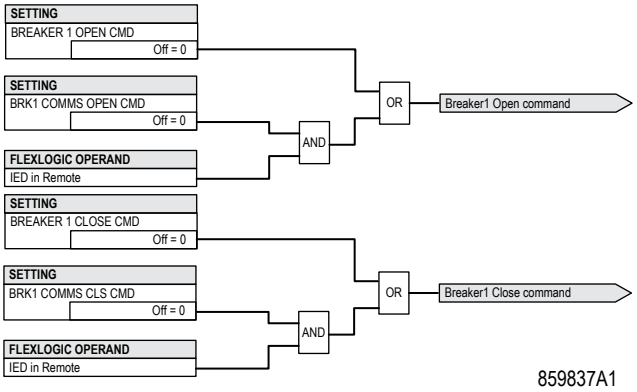

Figure 236: Dual breaker control logic (Sheet 5 of 5)

9.5.5 DISCONNECT SWITCH CONTROL

For relays with 9-2LE hardware and software options, this element is not present.

The disconnect switch control element contains the auxiliary logic for status. It serves as the interface for opening and closing disconnect switches through SCADA control or through the front panel interface. The disconnect switch control element can be used to create interlocking functionality. For greater security in determination of the switch pole position, both the 89/a and 89/b auxiliary contacts are used to report any discrepancy between them. The number of available disconnect switches is four per breaker. The disconnect switch control element is executed and status updated every ½ power cycle. To use this element, configure the contact outputs that open and close the disconnect switch to use FlexLogic operands SWITCH 1 OFF CMD and SWITCH 1 ON CMD, and configure the disconnect switch control element's inputs as outlined here.

Setting path: ***SETTINGS > SYSTEM SETUP > SWITCHES***

■ SWITCHES ■	⇔	■ COMMON SETTINGS ■
	⇧	■ SWITCH <n> ■

The ***SYSTEM SETUP > SWITCHES*** menu has two sub-menus:

- COMMON SETTINGS
- SWITCH <n>, where n = 1 to 24

COMMON SETTINGS

There is only one common setting amongst switches ; ***SW INTERM & BAD ST TIMERS***:

This can be set to `Common` or `Distinct`. When set to `Common`, the switch element considers both `00` and `11` states of 89/a and 89/b as an intermediate state and when the Toperate timer expires, declares the switch as bad status. When set to Distinct" the switch element considers 00 state of 89/a and 89/b as an intermediate state and 11 as bad status. When the switch status detected is 00, the switch element waits for the Toperate timer to expire before declaring the intermediate state. When the switch status detected is 11, the switch element waits for the Bad ST Tsuppress timer to expire before declaring the bad state. See switch logic diagrams 2 and 4.

SWITCH <n>

Each switch (1 to 24) has the following settings. Only switch 1 is shown here.

Setting path: ***SETTINGS > SYSTEM SETUP > SWITCHES > SWITCH 1***

■ SWITCH 1 ■	⇔	SWITCH 1 FUNCTION: Disabled	Range: Disabled, Enabled
	⇕	SWITCH 1 NAME: SW 1	Range: up to six alphanumeric characters
	⇕	SWITCH 1 MODE: 3-Pole	Range: 3-Pole, 1-Pole
	⇕	SWTCH 1 ΦA/3P DPS INP: Off	Range: Off, RxGOOSE DPS 1, RxGOOSE DPS 2...
	⇕	SWTCH 1 ΦA/3P OPND: Off	Range: FlexLogic operand
	⇕	SWTCH 1 ΦA/3P CLSD: Off	Range: FlexLogic operand
	⇕	SWITCH 1 ΦB DPS: INP: Off	Range: Off, RxGOOSE DPS 1, RxGOOSE DPS 2...
	⇕	SWITCH 1 ΦB OPENED: Off	Range: FlexLogic operand
	⇕	SWITCH 1 ΦB CLOSED: Off	Range: FlexLogic operand
		SWITCH 1 ΦC DPS: INP: Off	Range: Off, RxGOOSE DPS 1, RxGOOSE DPS 2...
	⇕	SWITCH 1 ΦC OPENED: Off	Range: FlexLogic operand
	⇕	SWITCH 1 ΦC CLOSED: Off	Range: FlexLogic operand
	⇕	SWITCH 1 ALARM PDisc DELAY: 0.000 s	Range: 0.000 to 65.535 s in steps of 0.001

⇕	SWITCH 1 OPEN CMD: Off	Range: FlexLogic operand
⇕	SW1 COMMS OPEN CMD: Off	Range: FlexLogic operand
⇕	SWITCH 1 CLOSE CMD: Off	Range: FlexLogic operand
⇕	SW1 COMMS CLS CMD: Off	Range: FlexLogic operand
⇕	SWITCH 1 PB CONTROL: Off	Range: FlexLogic operand
⇕	SWITCH 1 TOPERATE: 70 ms	Range: 0 to 65535 ms in steps of 1
⇕	SWITCH 1 BAD ST TSUPPRESS: 0 ms	Range: 0 to 65535 ms in steps of 1
⇕	SWITCH 1 OPEN SEAL-IN: 0.000 s	Range: 0.000 to 65.535 s in steps of 0.001
⇕	SWITCH 1 CLOSE SEAL-IN: 0.000 s	Range: 0.000 to 65.535 s in steps of 0.001
⇕	SWITCH 1 BLK OPEN: Off	Range: FlexLogic operand
⇕	SWITCH 1 BLK CLOSE: Off	Range: FlexLogic operand
⇕	SWITCH 1 BLK BYPASS: Disabled	Range: Disabled, Enabled
⇕	SWITCH 1 TAGGING: Disabled	Range: Disabled, Enable No Override, Enable with Override
⇕	BSWITCH 1 SUBSTITUTN: Disabled	Range: Disabled, Enabled
⇕	SWITCH 1 EVENTS: Disabled	Range: Disabled, Enabled
⇕	SW1 CILO INTRLK TO LOCAL CTRL: Disabled	Range: Disabled, Enabled
⇕	SW1 CILO INTERLOCK GFP BYPASS: Disabled	Range: Disabled, Enabled
⇕	SWITCH 1 LOCAL: Off	Range: FlexLogic operand
⇕	SW1 BLK MNL CMD IN LOCAL: Disabled	Range: Disabled, Enabled
⇕	SW1 CSWI LOC STAT: Off	Range: FlexLogic operand
⇕	SW1 STATION AUTHOR: Off	Range: FlexLogic operand
⇕	SWITCH 1 OPEN INTERLOCK: Off	Range: FlexLogic operand
⇕	SWITCH 1 CLOSE INTERLOCK: Off	Range: FlexLogic operand

⇕	SWITCH 1 POS-REACHED CHECK: Enabled	Range: Disabled, Enabled

The following settings are available for each switch control element.

SWITCH 1 FUNCTION

This setting enables and disables the operation of the disconnect switch element.

SWITCH 1 NAME

This setting allows you to assign a user-defined name (up to six characters) to the switch. This name is used in flash messages related to switch 1.

SWITCH 1 MODE

This setting sets either `3-Pole` mode, where all disconnect switch poles are operated simultaneously, or `1-Pole` mode, where each disconnect switch pole has its own auxiliary switch.

SWTCH 1 ΦA/3P DPS INP

This setting selects a double point status input (RxGOOSE# DPS Input) that is subscribed via GOOSE. Each received RxGOOSE# DPS Input consist of 2 bits. The derived switch status is shown in the logic diagram.

When the IEC61850 RxGOOSE# DPS is mapped to ***SWITCH1 ΦA/3P DPS INP***, the switch status (Open/Close/Intermediate/Bad) will be based on the RxGOOSE DPS # value.

If the ***SWITCH1 ΦA/3P DPS INP*** selects a RxGOOSE DPS Input:

- the respective ***SWITCH1 ΦA/3P OPND*** and ***SWITCH1 ΦA/3P CLSD*** settings are not considered.
- the respective ***SWITCH T OPERATE*** and ***SWITCH BAD ST TSUPPRESS*** settings are also not considered in the receiving relay

SWITCH 1 ΦA/3P OPND

This setting selects an operand (usually a contact input), which is for a normally-closed 89/a status input. This activates a logic 1 when the breaker is open. If a separate 89/b contact input is not available, then the inverted 89/a status signal or the inverted ***SWITCH 1 CLOSED*** status signal can be used.

SWITCH 1 ΦA/3P CLSD

This setting selects an operand (usually a contact input) connected to a disconnect switch auxiliary position tracking mechanism. This input is for a normally-open 89/a status input that creates a logic 1 when the disconnect switch is closed. If the ***SWITCH 1 MODE*** setting is `3-Pole`, this setting selects a single 89/a input as the operand used to track the breaker open or closed position. In `1-Pole` mode, the input mentioned is used to track phase A and the ***SWITCH 1 ΦB*** and ***SWITCH 1 ΦC*** settings select operands to track phases B and C, respectively.

SWITCH1 ΦB DPS INP

If the mode is selected as three-pole, this setting has no function. If the mode is selected as single-pole, this input is used to track the switch phase B position as outlined for phase A.

SWITCH 1 ΦB OPENED

In three-pole mode, this setting has no function. In single-pole mode, this input is used to track the disconnect switch phase B opened position as outlined for phase A.

SWITCH 1 ΦB CLOSED

In three-pole mode, this setting has no function. In single-pole mode, this input is used to track the disconnect switch phase B closed position as outlined for phase A.

SWITCH1 ΦC DPS INP

If the mode is selected as three-pole, this setting has no function. If the mode is selected as single-pole, this input is used to track the switch phase C position as outlined for phase A.

SWITCH 1 ΦC OPENED

In three-pole mode, this setting has no function. In single-pole mode, this input is used to track the disconnect switch phase C opened position as outlined for phase A.

SWITCH 1 ΦC CLOSED

In three-pole mode, this setting has no function. In single-pole mode, this input is used to track the disconnect switch phase C closed position as outlined for phase A.

SWITCH 1 ALARM PDisc DELAY

This setting specifies the delay interval during which a conflict of status among the pole position tracking operands does not declare a pole discrepancy. This allows for non-simultaneous operation of the poles.

SWITCH 1 OPEN CMD

This setting selects an operand that initiates a Switch 1 Open command. The command is not executed when blocked by the operand assigned to ***SWITCH1 BLK OPEN*** setting.

SW1 COMMS OPEN CMD

This setting selects an operand that initiates a Switch 1 Open command. The setting is intended for commands received via communication protocols (DNP3, IEC104 and Modbus) to be supervised by IED Local/Remote status. The command is not executed if the relay is in local mode or blocked by the operand assigned to the ***SWITCH 1 BLK OPEN*** setting.

SWITCH 1 CLOSE CMD

This setting selects an operand that initiates a Switch 1 Close command. The command is not executed when blocked by an operand assigned to the ***SWITCH 1 BLK CLOSE*** setting.

SW1 COMMS CLS CMD

This setting selects an operand that initiates a Switch 1 Close command. The setting is intended for commands received via communication protocols (DNP3, IEC104 and Modbus) to be supervised by IED Local/Remote status. The command is not executed if the relay is in local mode or blocked by the operand assigned to the ***SWITCH 1 BLK CLOSE*** setting.

SWITCH 1 PB CONTROL

When the selected operand value is high, local disconnect switch operations are allowed from front panel pushbuttons .

SWITCH 1 TOPERATE

This setting specifies the required interval to overcome transient conflict between the 89/a and 89/b auxiliary contacts during disconnect switch operation. If transient conflict still exists after this time has expired, the SWITCH 1 BAD STATUS FlexLogic operand is asserted for alarm or blocking purposes.

SWITCH 1 BAD ST TSUPPRESS

When the ***SW INTERM & BAD ST TIMERS*** setting is set to `Distinct`, this setting specifies the required interval to overcome the transient state of `11` during the breaker operation. If the `11` state still exists after this time, the SWITCH 1 BAD STATUS FlexLogic operand is asserted. When the ***SW INTERM & BAD ST TIMERS*** setting is set to `Common`, this setting is not used.

SWITCH 1 OPEN SEAL-IN

This setting specifies the seal-in time of the open command due to an operator-initiated manual open command to the disconnect switch.

SWITCH 1 CLOSE SEAL-IN

This setting specifies the seal-in time of the close command due to an operator-initiated manual close command to the disconnect switch.

SWITCH 1 BLK OPEN

This setting selects an operand that prevents initiation of the disconnect Switch 1 command. This setting can be used to block the disconnect switch from opening, for instance when switch yard monitoring indicates that current exceeding the switch's interrupting rating can be flowing through the switch.

SWITCH 1 BLK CLOSE

This setting selects an operand that prevents initiation of disconnect Switch 1 close commands. This setting can be used to block the disconnect switch from closing, for instance to prevent closing into a closed ground switch.

SWITCH 1 BLK BYPASS

This setting is only available for relays with a graphical front panel. When enabled, this setting allows the graphical front panel to bypass switch 1 interlocking. When asserted, ***SWITCH 1 BLK OPEN*** and ***SWITCH 1 BLK CLOSE*** settings are bypassed.

SWITCH 1 TAGGING

This setting is only available for relays with a graphical front panel. Switch tagging is used to block certain operations for safety purposes. No other action is needed after enabling the function; it is handled internally where certain functions are blocked.

Set to `Enable No Override` to allow the graphical front panel or IEC 61850 MMS control to tag switch 1. When tagged from the graphical front panel, tagging can be removed only from the graphical front panel, and an attempt to remove tagging using IEC 61850 MMS control results in a negative response (-Rsp). When tagged from IEC 61850 MMS control, tagging can be removed only by MMS control.

Set to `Enable With Override` to allow the graphical front panel or IEC 61850 MMS control to tag switch 1. When tagged from the graphical front panel, tagging can be removed only from the graphical front panel, and an attempt to remove tagging using IEC 61850 MMS control results in a negative response (-Rsp). When tagged from IEC 61850 MMS control, tagging can be removed by MMS control or from the graphical front panel. That is, the graphical front panel has an override function.

When tagged, the following operations are disabled:

- Pushbutton open/close
- IEC 61850 open/close
- Open command initiated by SWITCH 1 OPEN setting
- Close command initiated by SWITCH 1 CLOSE setting.

SWITCH 1 SUBSTITUTN

This setting is only available for relays with a graphical front panel. When enabled, this setting allows the graphical front panel/IEC 61850 to substitute switch 1 status. When substituted, switch 1 control open/close status is forced to the substituted value.

SWITCH 1 LOCAL

This setting selects an operand that indicates the Switch control behavior from an IEC 61850 client. When the operand value is set, it indicates the Switch in Local mode and the remote commands from IEC 61850 client are blocked. You set this setting using the EnerVista software or with an SCL file.

SW1 BLK MNL CMD IN LOCAL

When this setting is enabled, and the SWITCH 1 LOCAL operand state is logic `1` (i.e. the Switch is in Local mode and Disc0XSWI1.Loc is TRUE), manual commands originating from the front panel pushbuttons, graphical front panel and ***SWITCH 1 OPEN/CLOSE CMD*** are blocked. When disabled, manual commands originating from the relay are allowed even when the switch is in Local mode. This setting is available only if the order code includes IEC 61850.

SW1CSWI LOC STAT

This setting selects an operand that indicates the switch residing in that bay is in Local or Remote mode. When the operand state is logic `1`, the bay is considered to be in Local mode, otherwise it is considered to be in Remote mode. The operand status is modeled in the IEC 61850 server using the respective Switch CSWI Loc data objects. You should refer to the operand status in the Control Authority table to determine the control authority for different levels. This setting is available only if the order code includes IEC 61850.

SW1 STATION AUTHOR

This setting selects an operand that indicates the Station level authority status. The operand status is modeled in the IEC 61850 server using the respective CSWI LocSta data objectS. Refer to the operand status in the Control Authority table to determine the control authority for different levels. This setting is available only if the order code includes IEC 61850.

SWITCH 1 OPEN INTERLOCK

This setting selects an operand that indicates the interlock status for the Switch Open commands. This operand state is mapped directly to the IEC 61850 DiscCILO1.EnaOpn.stVal, which is used to reject the IEC 61850 open command when the selected operand state is at logic `0` (DiscCILO1.EnaOpn.stVal is set to false). However, the IEC 61850 client can choose to check or skip the interlock condition to execute the command using the `Check` parameter. In addition, the interlock condition can be applied to the local commands, which can originate from the front local HMI, front panel push buttons, graphical front panel and FlexLogic Operands assigned to the ***SWITCH 1 OPEN CMD*** setting. This is achieved by enabling ***SW1 CILO INTRLK TO LOCAL CTRL***. This setting is available only if the order code includes IEC 61850.

SWITCH 1 CLOSE INTERLOCK

This setting selects an operand that indicates the interlock status for the Switch Open commands. This operand state is mapped directly to the IEC 61850 DiscCILO1.EnaCls.stVal, which is used to reject the IEC 61850 close command when the selected operand state is at logic `0` (DiscCILO1.EnaCls.stVal is set to false). However, the IEC 61850 client can choose to check or skip the interlock condition to execute the command using the `Check` parameter. In addition, the interlock condition can be applied to the local commands, which can originate from the front local HMI, front panel push buttons, graphical front panel and FlexLogic Operands assigned to the ***SWITCH 1 CLOSE CMD*** setting. This is achieved by enabling ***SW1 CILO INTRLK TO LOCAL CTRL***. This setting is available only if the order code includes IEC 61850.

SWITCH 1 POS-REACHED CHECK

When enabled, the IEC 61850 control value is checked for current switch status and is rejected if the command value (Open/Close) from IEC 61850 client matches with the present switch status. When disabled, the current switch status is not verified to accept the control. This setting is only available if the order code includes IEC 61850. It is set using the Enervista software.

Note:
*Before software release version 7.90, **ST.LOC OPERAND**, **INTERLOCK OPN**, **INTERLOCK CLS** and **SYNCCHECK CLOSE** settings were available in IEC 61850 configurator under **System Setup > Switches**. From version 7.90 onwards, the above mentioned settings were removed from the IEC 61850 configurator and merged with the Breaker settings screen under **Settings > System Setup > Switches** (outside the IEC 61850 configurator). Also, the name of the setting **ST.LOC OPERAND** has been changed to **LOCAL**.*

Note:
***SWITCH 1 LOCAL, INTERLOCK OPEN, INTERLOCK CLOSE, SYNCCHECK CLOSE** settings are not available on the front panel and can be configured either from EnerVista Software or via SCL files. Refer to the MICS document online for respective settings modeling in SCL files. **SWITCH 1 POS-REACHED CHECK** is only configurable via EnerVista software.*

The switch element has direct hard-coded connections to the IEC 61850 model as shown in the logic diagrams. This allows remote open/close operation of each switch, using either CSWI or XSWI IEC 61850 logical nodes. IEC 61850 select-before-operate functionality, local/remote switch functionality, along with blocking open/close commands are provided. Note that the dwell time for the IEC 61850 trip and close commands shown is one protection pass only. To maintain close/open command for a certain time, do so using the seal-in timers ***SWITCH 1 OPEN SEAL-IN*** and ***SWITCH 1 CLOSE SEAL-IN***, on the contact outputs using the setting, or in FlexLogic.

9.5.5.1 DISCONNECT SWITCH CONTROL LOGIC

The following diagrams show the disconnect switch control logic:

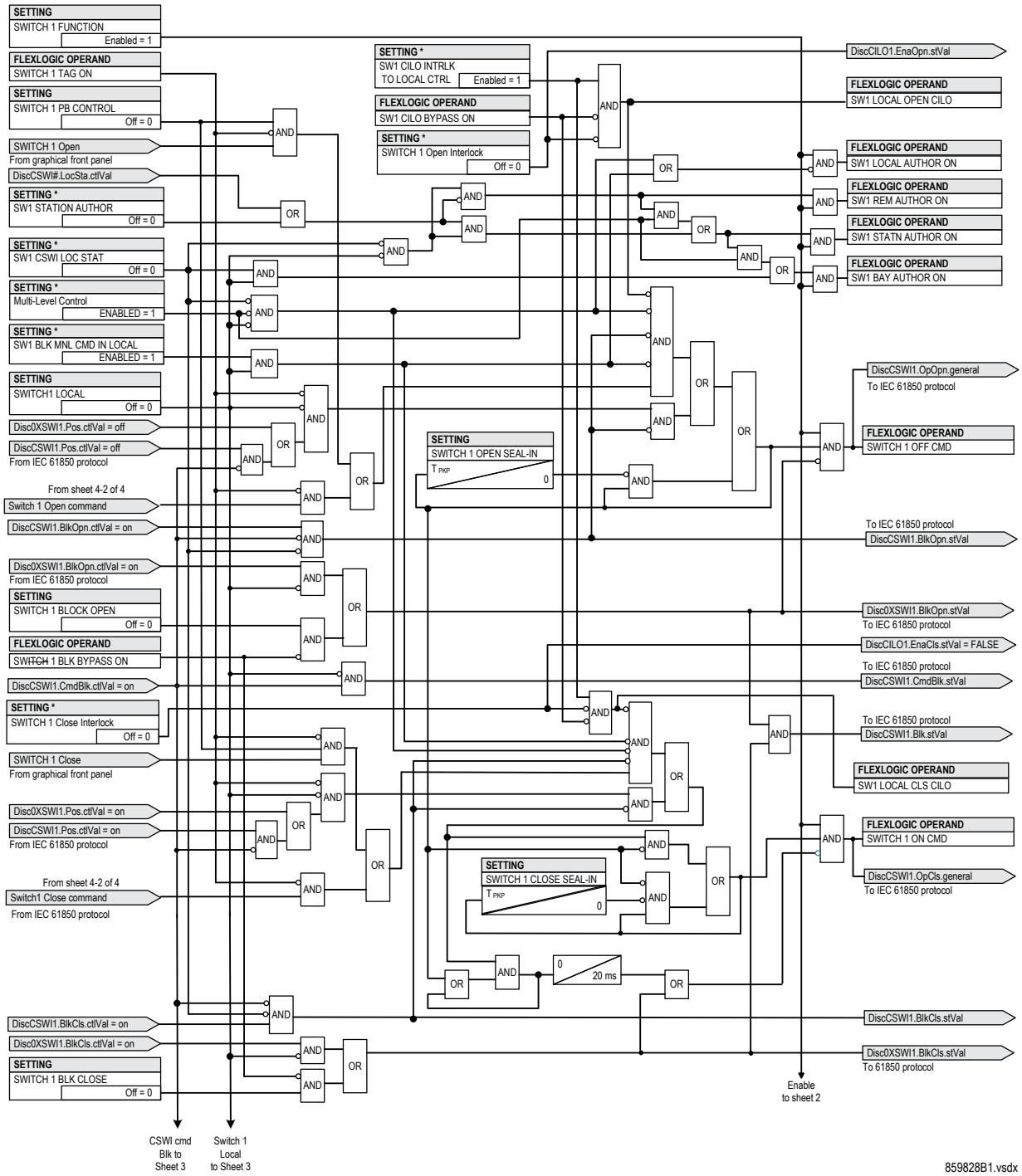

Figure 237: Disconnect switch control logic (Sheet 1 of 5)

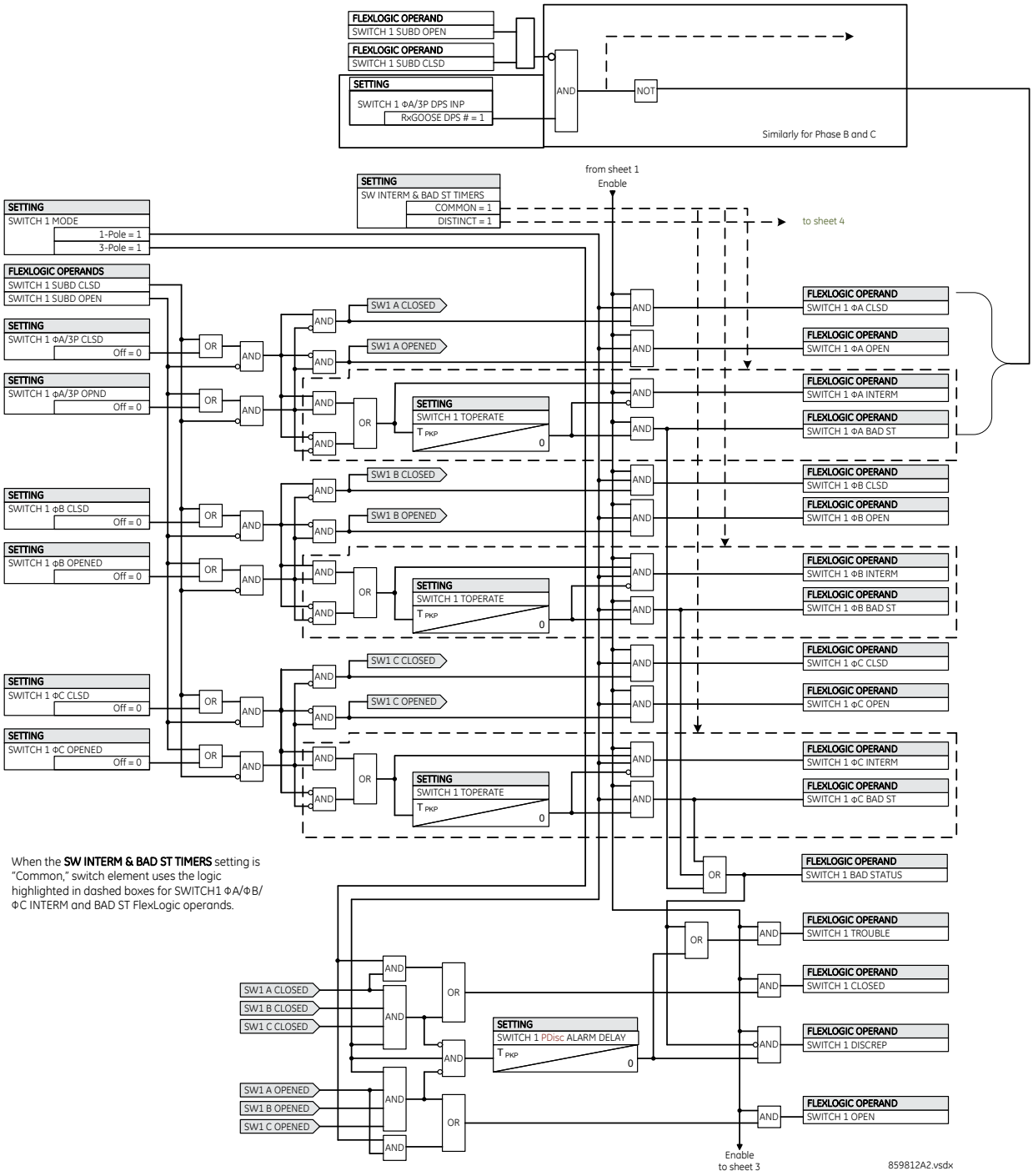

Figure 238: Disconnect switch control logic (Sheet 2 of 5)

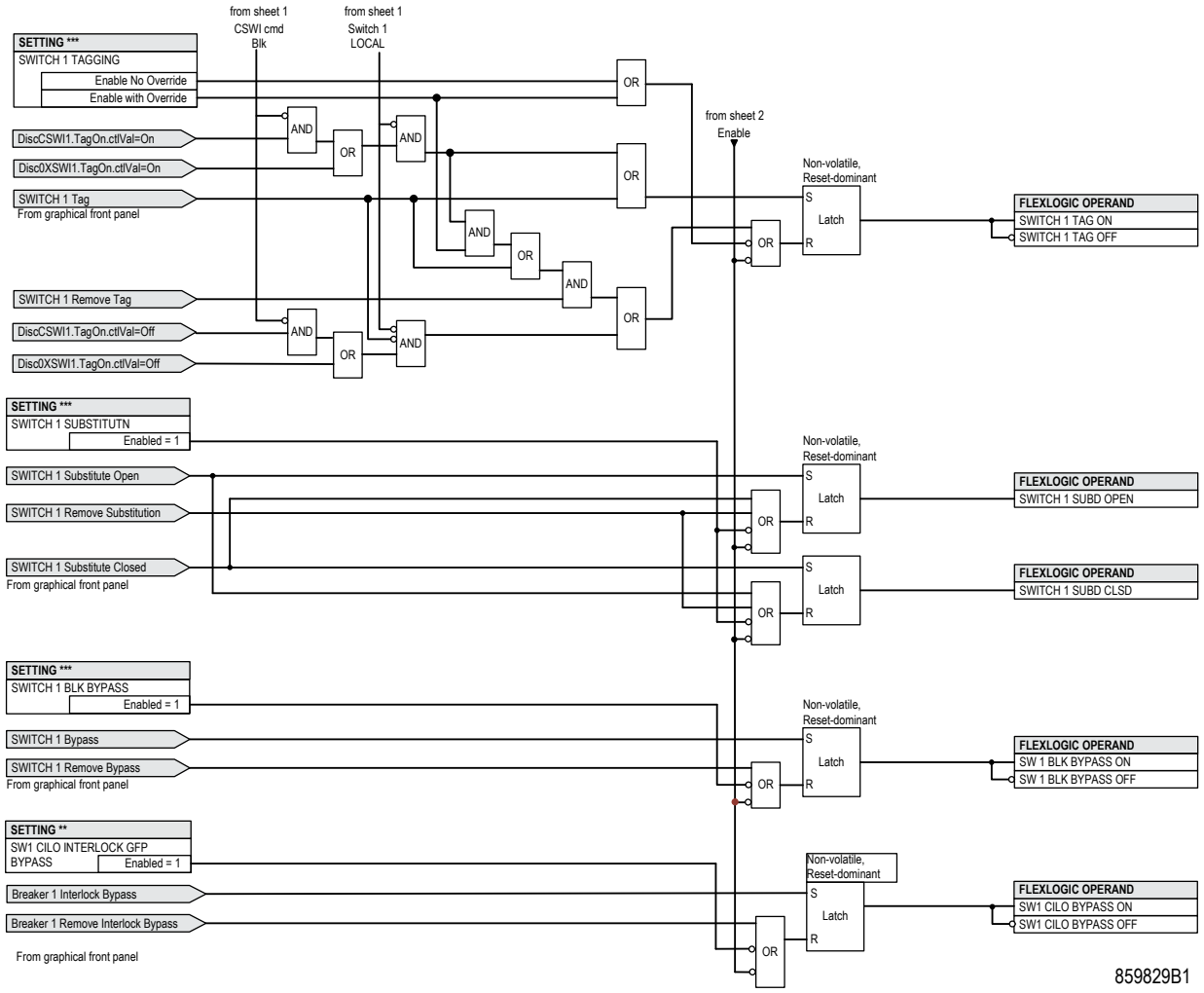

Figure 239: Disconnect switch control logic (Sheet 3 of 5)

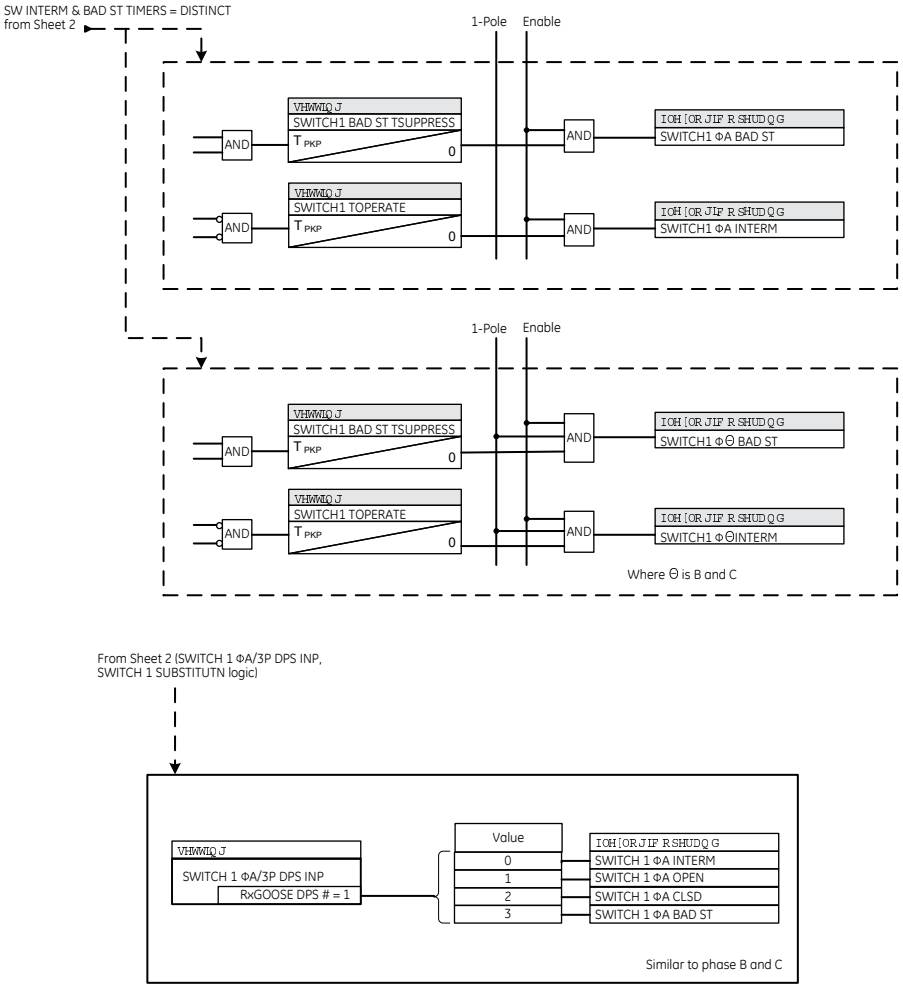

Figure 240: Disconnect switch control logic (Sheet 4 of 5)

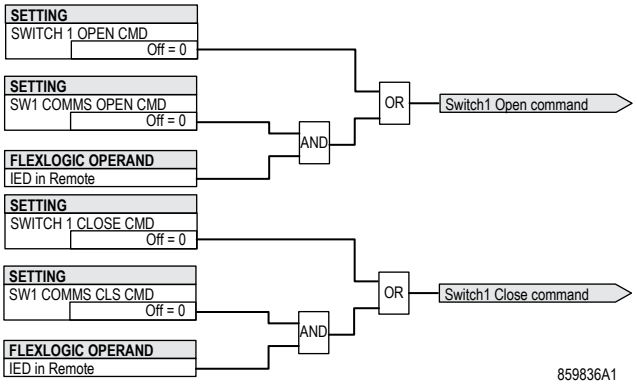

Figure 241: Disconnect switch control logic (Sheet 5 of 5)

9.5.6 FLEXCURVES

Setting path: ***SETTINGS > SYSTEM SETUP > FLEXCURVES > FLEXCURVE <n>***

where n = A to D

■ FLEXCURVE A ■	⇔	FLEXCURVE A TIME AT 0.00 xPKP: 0 ms	Range: 0 to 65535 ms in steps of 1

⇕ FLEXCURVE A TIME AT 0.05 xPKP: 0 ms — Range: 0 to 65535 ms in steps of 1

↓:

⇧ FLEXCURVE A TIME AT 20.00xPKP: 0 ms — Range: 0 to 65535 ms in steps of 1

FlexCurves A through D have settings for entering times to reset and operate at the following pickup levels: 0.00 to 0.98 and 1.03 to 20.00. This data is converted into two continuous curves by linear interpolation between data points. To enter a custom FlexCurve, enter the reset and operate times (using the **VALUE** keys) for each selected pickup point (using the **MESSAGE** up/down keys) for the required protection curve (A, B, C, or D).

Reset	Time ms	Reset	Time ms		Operate	Time ms	Operate	Time ms	Operate	Time ms	Operate	Time ms
0.00		0.68			1.03		2.9		4.9		10.5	
0.05		0.70			1.05		3.0		5.0		11.0	
0.10		0.72			1.1		3.1		5.1		11.5	
0.15		0.74			1.2		3.2		5.2		12.0	
0.20		0.76			1.3		3.3		5.3		12.5	
0.25		0.78			1.4		3.4		5.4		13.0	
0.30		0.80			1.5		3.5		5.5		13.5	
0.35		0.82			1.6		3.6		5.6		14.0	
0.40		0.84			1.7		3.7		5.7		14.5	
0.45		0.86			1.8		3.8		5.8		15.0	
0.48		0.88			1.9		3.9		5.9		15.5	
0.50		0.90			2.0		4.0		6.0		16.0	
0.52		0.91			2.1		4.1		6.5		16.5	
0.54		0.92			2.2		4.2		7.0		17.0	
0.56		0.93			2.3		4.3		7.5		17.5	
0.58		0.94			2.4		4.4		8.0		18.0	
0.60		0.95			2.5		4.5		8.5		18.5	
0.62		0.96			2.6		4.6		9.0		19.0	
0.64		0.97			2.7		4.7		9.5		19.5	
0.66		0.98			2.8		4.8		10.0		20.0	

Note:
The relay using a given FlexCurve applies linear approximation for intervals between the user-entered points. Take care when setting the two points that are closest to the multiple of pickup of 1 (0.98 pu and 1.03 pu). We recommend that you set the two times to a similar value, otherwise the linear approximation can result in undesired behavior for the operating quantity that is close to 1.00 pu.

9.5.6.1 FLEXCURVE CONFIGURATION WITH ENERVISTA SOFTWARE

The EnerVista software allows for easy configuration and management of FlexCurves and their associated data points. You can configure FlexCurves from a selection of standard curves to provide the best approximate fit, then edit specific data points afterwards. Alternately, you can import curve data from a specified file (.csv format) by

selecting the EnerVista Import Data From setting (***Settings > System Setup > FlexCurves > FlexCurve***). You customize FlexCurves by editing the operating time (ms) values at pre-defined per-unit current multiples.

> *Note:*
> *Note that the pickup multiples start at zero (implying the "reset time"), operating time below pickup, and operating time above pickup.*

9.5.6.2 RECLOSER CURVE EDITING

You can shape recloser curves into a composite curve with a minimum response time and a fixed time above a specified pickup multiples. 41 recloser curve types supported. These definite operating times are useful to coordinate operating times, typically at higher currents and where upstream and downstream protective devices have different operating characteristics. The recloser curve configuration window shown here appears when you set the ***Initialize From*** setting in the EnerVista software to `Recloser Curve` and clicking the ***Initialize FlexCurve*** button.

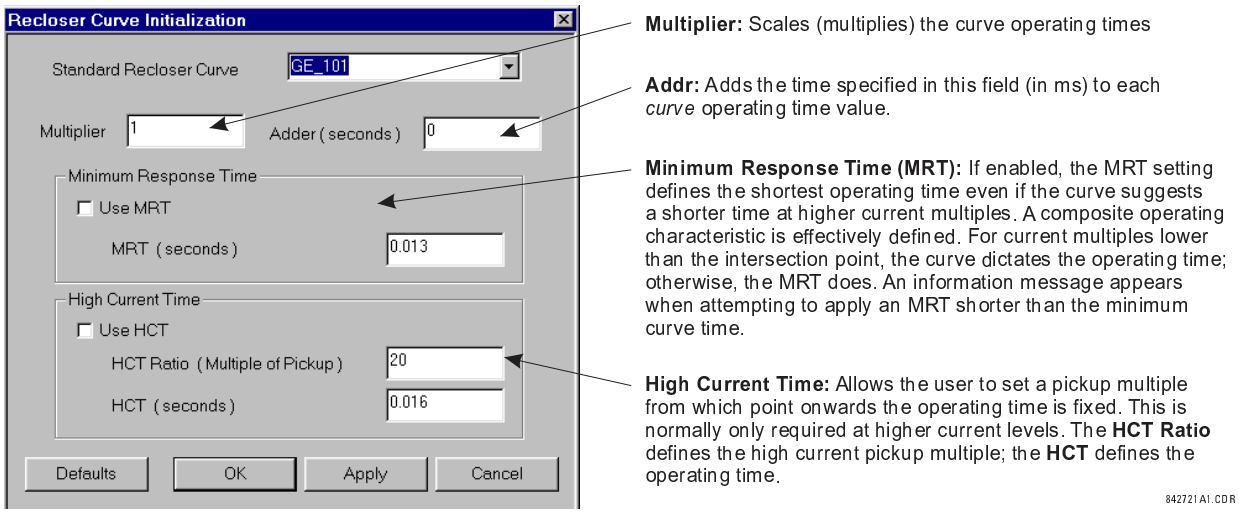

Figure 242: Recloser curve initialization

> *Note:*
> *The Multiplier and Adder settings only affect the curve portion of the characteristic and not the MRT and HCT settings. The HCT settings override the MRT settings for multiples of pickup greater than the HCT ratio.*

Example

A composite curve is created from the GE_111 standard with MRT = 200 ms and HCT initially disabled. HCT is then enabled at eight times pickup with an operating time of 30 ms. At approximately four times pickup, the curve operating time is equal to the MRT and from then onwards the operating time remains at 200 ms.

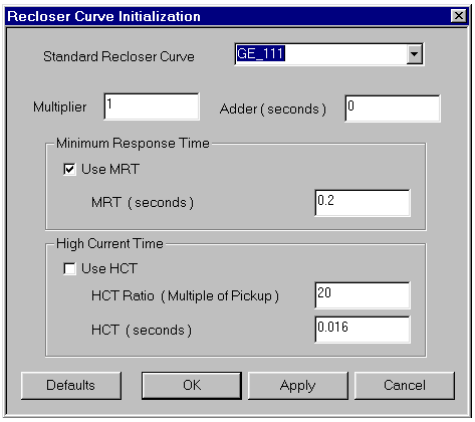

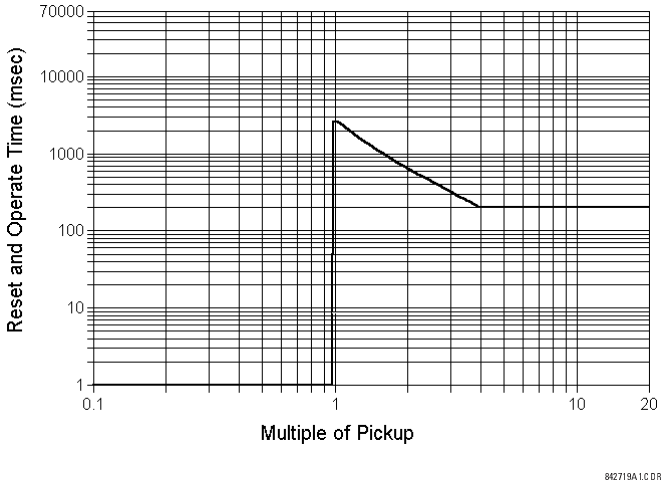

Composite recloser curve with HCT disabled

With the HCT feature enabled, the operating time reduces to 30 ms for pickup multiples exceeding eight times pickup

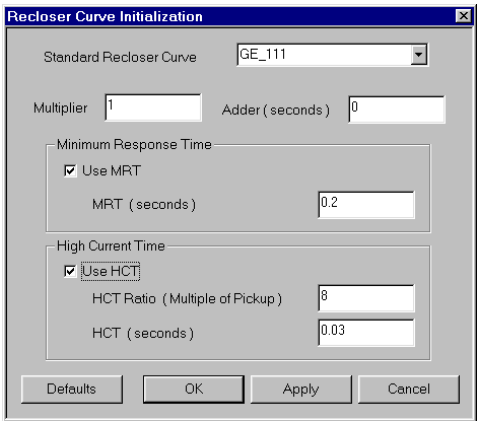

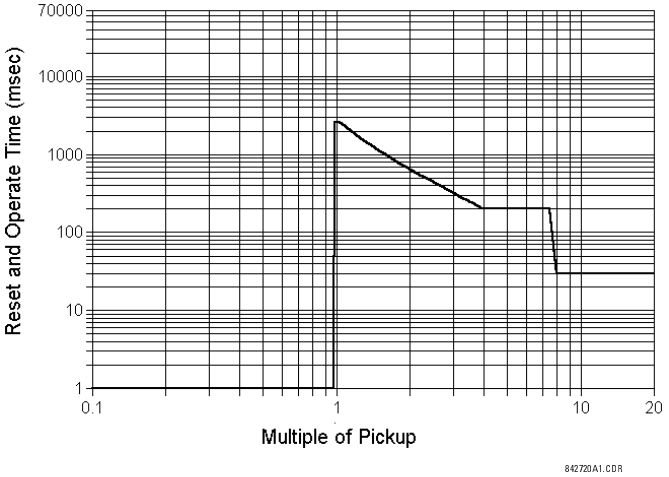

Composite recloser curve with HCT enabled

> *Note:*
> *Configuring a composite curve with an increase in operating time at increased pickup multiples is not allowed. If you attempt this, the EnerVista software will generate an error message and discard the proposed changes*

9.5.6.3 STANDARD RECLOSER CURVES

The following graphs display standard recloser curves available.

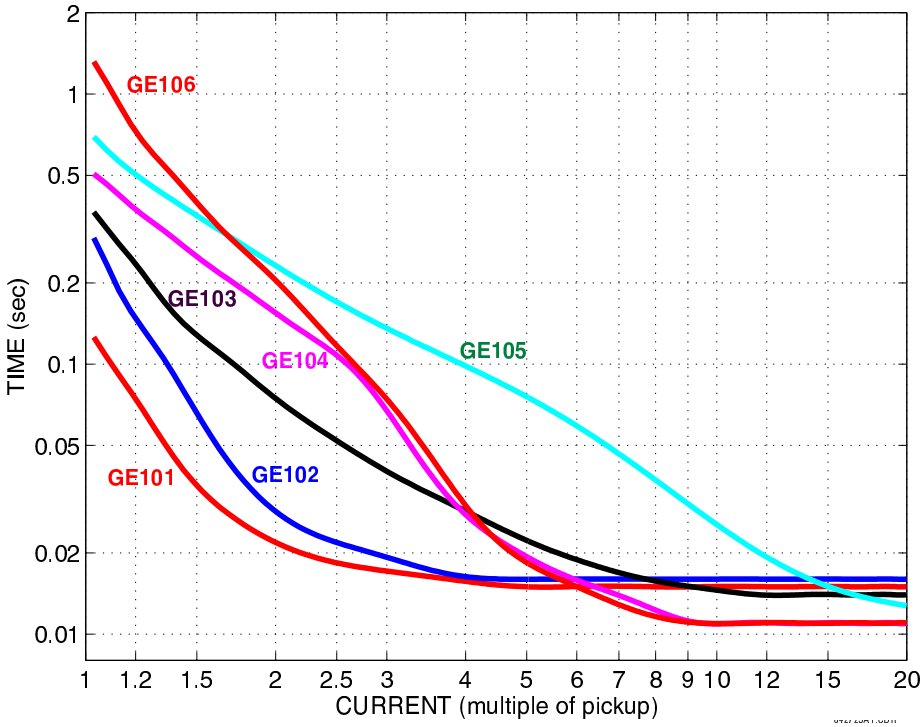

Figure 243: Recloser curves GE101 to GE106

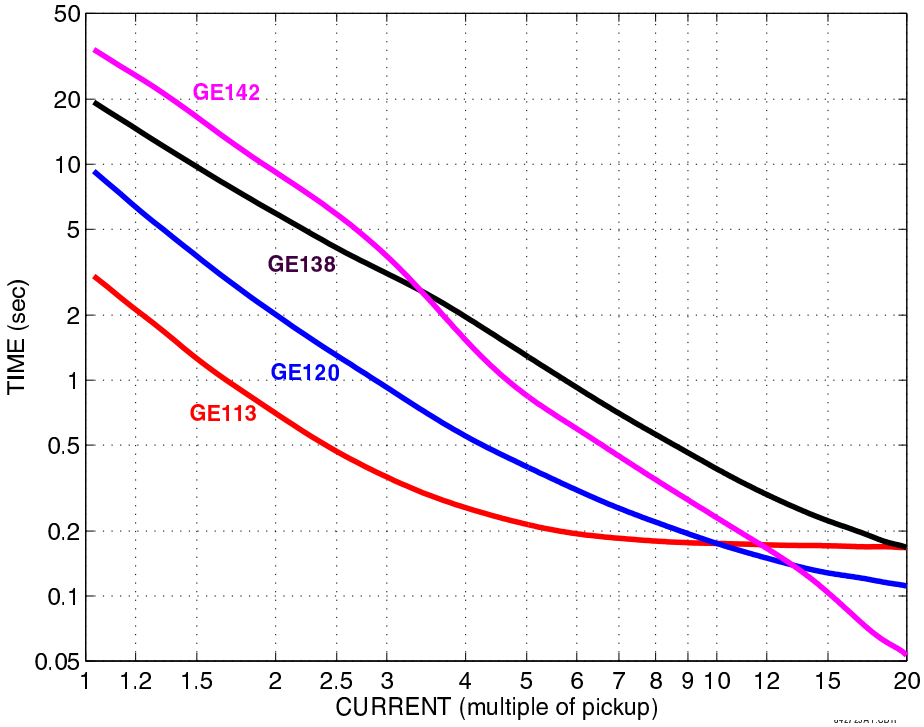

Figure 244: Recloser curves GE113, GE120, GE138, and GE142

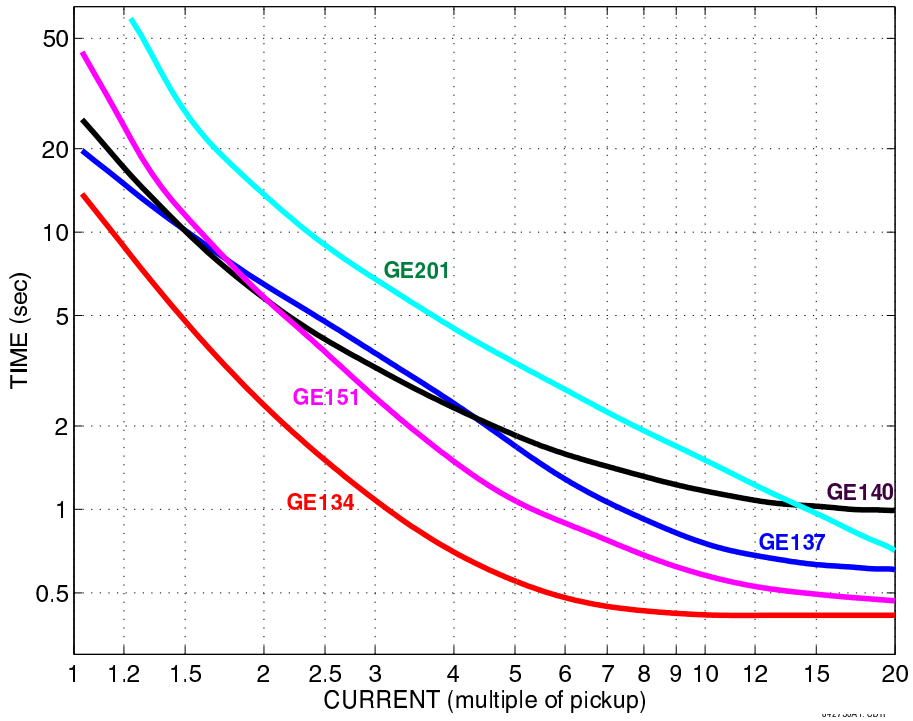

Figure 245: Recloser curves GE134, GE137, GE140, GE151, and GE201

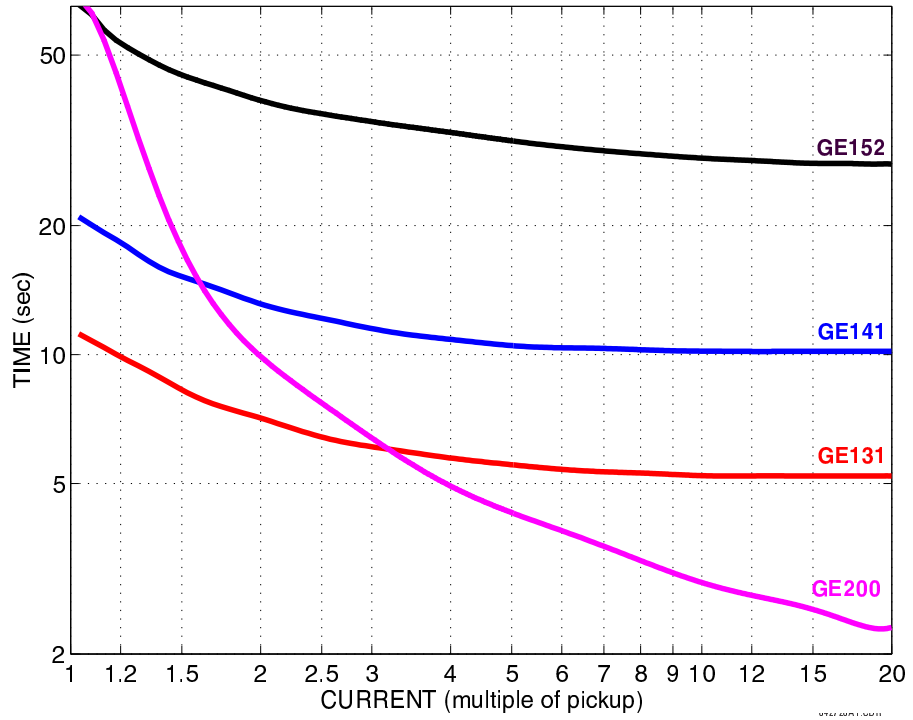

Figure 246: Recloser curves GE131, GE141, GE152, and GE200

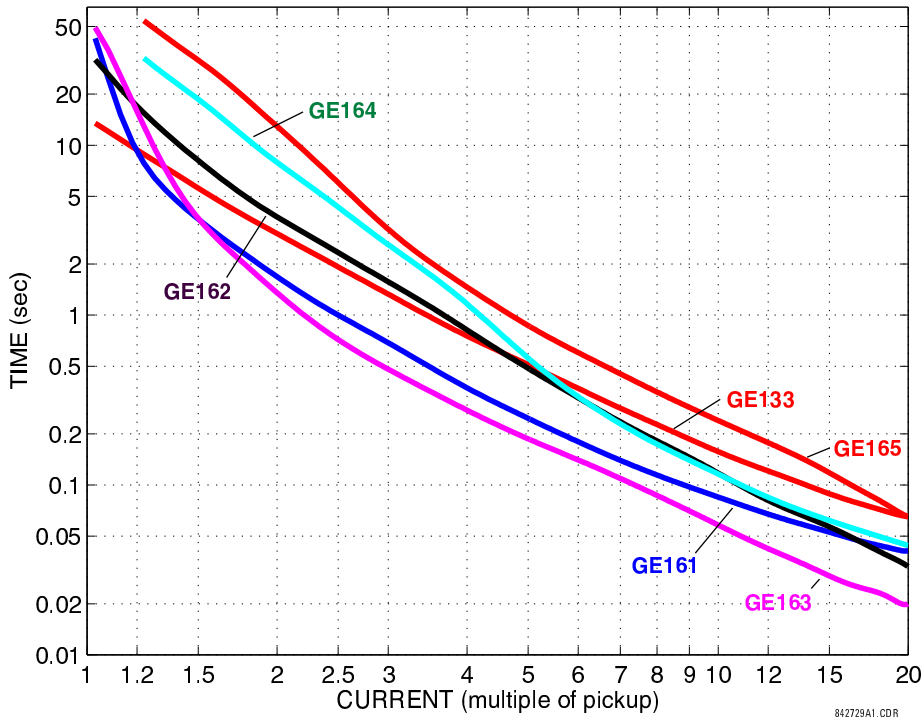

Figure 247: Recloser curves GE133, GE161, GE162, GE163, GE164, and GE165

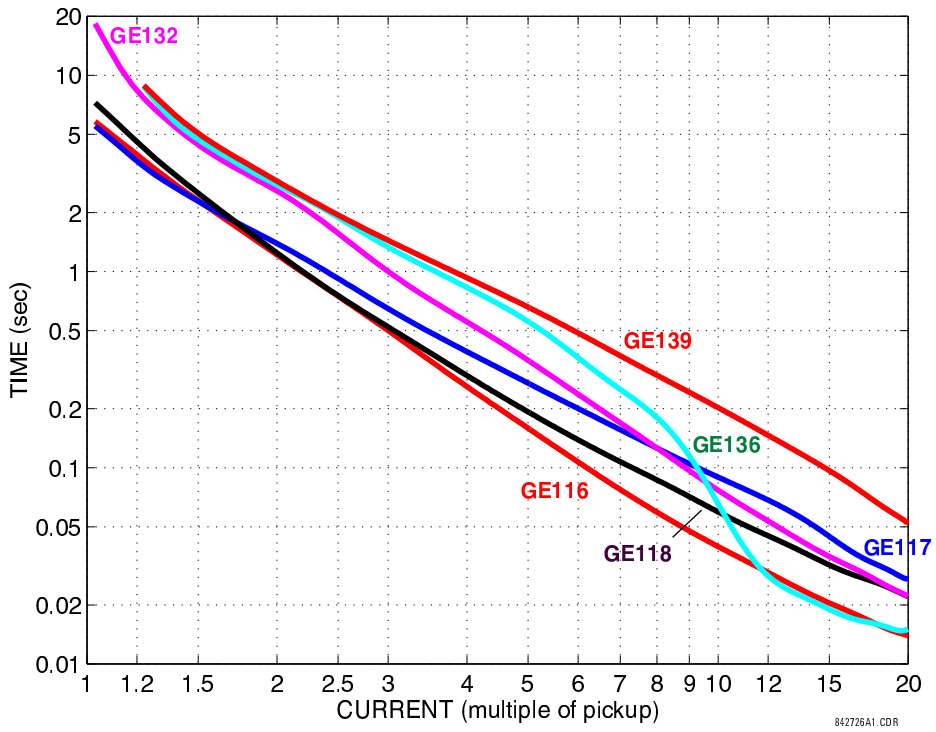

Figure 248: Recloser curves GE116, GE117, GE118, GE132, GE136, and GE139

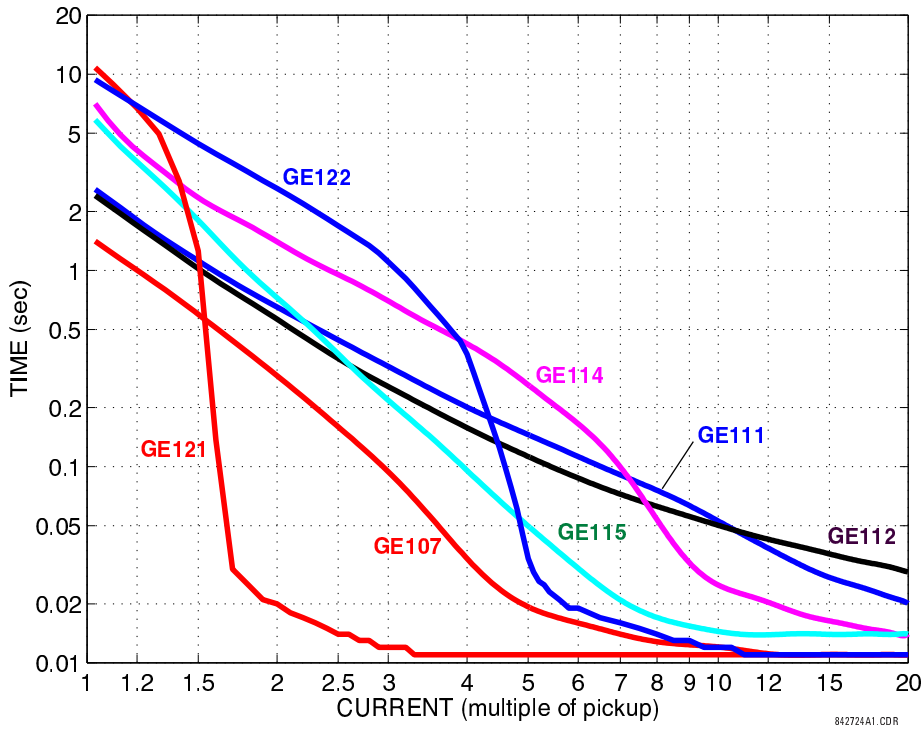

Figure 249: Recloser curves GE107, GE111, GE112, GE114, GE115, GE121, and GE122

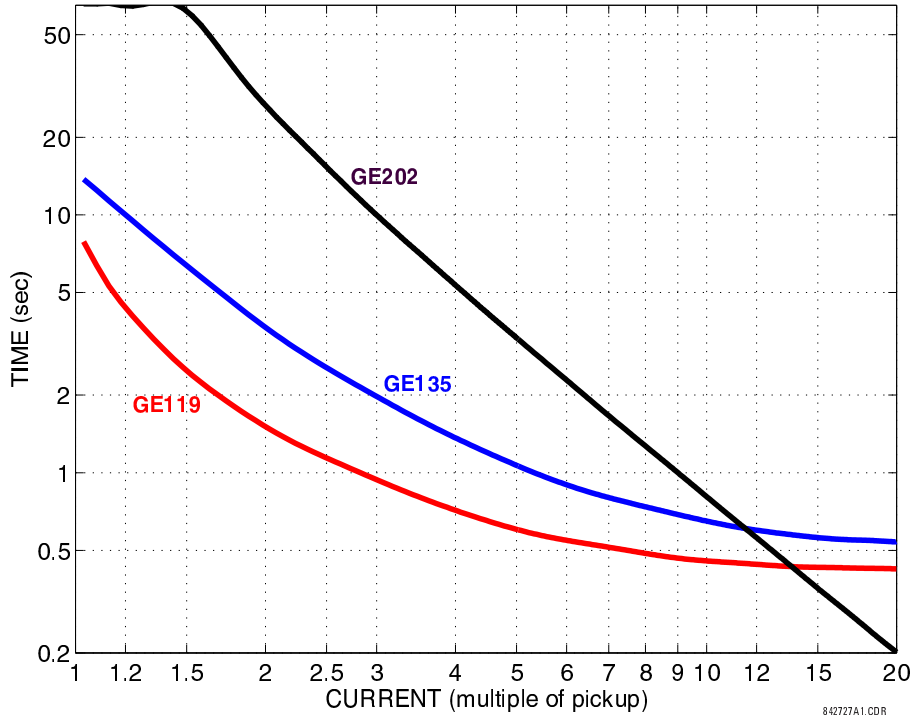

Figure 250: Recloser curves GE119, GE135, and GE202

9.5.7 PMU INSTANCE SETTINGS

Setting path: ***SETTINGS > SYSTEM SETUP > PHASOR MEASUREMENT UNIT > PHASOR MEASUREMENT UNIT <n>***

Up to six PMUs are available, depending on UR model and option choice. Only one is shown here.

■ PHASOR MEASUREMENT ■ UNIT 1	⇔	■ PMU 1 BASIC ■ CONFIGURATION
	⇕	■ PMU 1 ■ CALIBRATION
	⇕	■ PMU 1 ■ TRIGGERING
	⇑	■ PMU 1 ■ RECORDING

The PMU instance menu consists of the following sub-menus.

PMU 1 BASIC CONFIGURATION

This submenu invokes the basic configuration settings for PMU 1.

PMU 1 CALIBRATION

This submenu invokes the calibration settings for PMU 1.

PMU 1 TRIGGERING

This submenu invokes the triggering settings for PMU 1.

PMU 1 RECORDING

This submenu invokes the recording settings for PMU 1.

9.5.7.1 BASIC CONFIGURATION

Setting path: ***SETTINGS > SYSTEM SETUP > PHASOR MEASUREMENT UNIT > PHASOR MEASUREMENT UNIT <n>***

Up to six PMUs are available, depending on UR model and option choice. Only one is shown here.

■ PMU 1 BASIC ■ CONFIGURATION	⇔	PMU 1 FUNCTION: Disabled	Range: Enabled, Disabled
	⇕	PMU 1 IDCODE: 1	Range: 1 to 65534 in steps of 1
	⇕	PMU 1 STN: GE-UR-PMU	Range: 32-character ASCII string truncated to 16 characters if mapped into C37.118 Default: GE-UR-PMU
	⇕	PMU 1 GLOBAL PMU ID: GE-UR-PMU-000001	Range: 16-character ASCII string
	⇕	PMU 1 LATITUDE: 0.00000 °	Range: -90.00000 to 90.00000 in steps of 0.00001°.
	⇕	PMU 1 LONGITUDE: 0.00000 °	Range: -179.99999 to 180.00000 in steps of 0.00001°
	⇕	PMU 1 ELEVATION: 0.000 m	Range: -9999.999 to 9999.999 in steps of 0.001 meters
	⇕	PMU 1 SIGNAL SOURCE: SRC 1	Range: available signal sources
	⇕	PMU 1 CLASS: M-CLASS	Range: None, M-CLASS, P-CLASS

PMU 1 FORMAT: Integer	Range: Integer, Floating-point
PMU 1 STYLE: Polar	Range: Polar, Rectangular
PMU 1 RATE: 10/sec	Range: 1, 2, 4, 5, 10, 12, 15,20, 25, 30,50, 60, 100, 120
PMU 1 f & df/dt FILTER: None	Range: None, 10Hz/s <10Hz, 10Hz/s <20Hz, 20Hz/s <10Hz, 20Hz/s <20Hz
■ C37.118 PMU 1 ■ CONFIGURATION	
PMU 1 PHS- 1: Off	Range: available synchrophasor values
PMU 1 PHS- 14: Off	Range: available synchrophasor values
PMU 1 PHS- 1: NM: GE-UR-PMU-PHS 1	Range: 16-character ASCII string
PMU 1 PHS- 14: NM: GE-UR-PMU-PHS 14	Range: 16-character ASCII string
PMU 1 A-CH- 1: Off	Range: available FlexAnalog values
PMU 1 A-CH-8: Off	Range: available FlexAnalog values
PMU 1 A-CH- 1: NM: AnalogChannel 1	Range: 16-character ASCII string
PMU 1 A-CH-8: NM: AnalogChannel 8	Range: 16-character ASCII string
PMU 1 D-CH- 1: Off	Range: available FlexLogic operands
PMU 1 D-CH-16: Off	Range: available FlexLogic operands
PMU 1 D-CH- 1 NM: Dig Channel 1	Range: 16-character ASCII string
PMU 1 D-CH-16 NM: Dig Channel 16	Range: 16-character ASCII string
PMU 1 D-CH- 1 NORMAL STATE: Off	Range: Off, On

⇕	PMU 1 D-CH-16: NORMAL STATE: Off	Range: Off, On
⇧	■ 90-5 PMU 1 ■ CONFIGURATION	

PMU 1 FUNCTION

This setting enables the LOGICAL Device PMU 1 functionality. Use this setting to permanently enable or disable the feature.

PMU 1 IDCODE

This setting assigns a numerical ID to the PMU. It corresponds to the IDCODE field of the data, configuration, header, and command frames of the IEEE C37.118 protocol. The PMU uses this value when sending data, configuration, and header frames; and it responds to this value when receiving the command frame. This is used when only data from one PMU is present.

PMU 1 STN

This setting assigns an alphanumeric ID to the PMU station. It corresponds to the STN field of the configuration frame of the IEEE C37.118 protocol. This value is a 16-character ASCII string as per the IEEE C37.118 standard.

PMU 1 GLOBAL PMU ID

This setting is used to assign a global ID to the PMU and corresponds to the G_PMU_ID field in configuration 3 (CFG-3) message per the C37.118 protocol. This ID allows uniquely identifying PMUs in a system that has more than 65535 PMUs.

PMU 1 LATITUDE:

This setting is used to assign PMU Latitude in degrees, where positive values are N of equator, and negative values are S of equator.

PMU 1 LONGITUDE:

This setting is used to assign PMU longitude in degrees, where positive values are E of the prime meridian, and negative values are W of the prime meridian.

PMU 1 ELEVATION:

This setting is used to assign PMU elevation in meters, where positive values are above sea level, and negative values are below sea level.

PMU 1 SIGNAL SOURCE

This setting specifies one of the available L90 signal sources for processing in the PMU. Any combination of voltages and currents can be configured as a source. The current channels can be configured as sums of physically connected currents. This facilitates PMU applications in breaker-and-a-half, ring-bus, and similar arrangements. The PMU feature calculates voltage phasors for actual voltage (A, B, C, and auxiliary) and current (A, B, C, and ground) channels of the source, as well as symmetrical components (0, 1, and 2) of both voltages and currents. When configuring communication and recording features of the PMU, the user can select, from the above superset, the content to be sent out or recorded. When one source is selected by one PMU, it cannot be selected by another PMU.

PMU 1 CLASS (Range P, M, None)

This setting selects the synchrophasor class. A reporting rate of 100 or 120 can only be selected for class P synchrophasors and if the system frequency is 50 or 60 Hz, respectively.

PMU 1 NETWORK REPORTING FORMAT

This setting selects between reporting synchrophasors as 16-bit integer or 32-bit IEEE floating point numbers. This setting complies with bit-1 of the FORMAT field of the C37.118 configuration frame. Note that this setting applies to synchrophasors only; the user-selectable FlexAnalog channels are always transmitted as 32-bit integer values.

PMU 1 NETWORK REPORTING STYLE

This setting selects between reporting synchrophasors in rectangular (real and imaginary) or in polar (magnitude and angle) coordinates. This setting complies with bit-0 of the FORMAT field of the C37.118 configuration frame.

PMU 1 RATE

This setting specifies the reporting rate for the network (Ethernet) port. This value applies to all PMU streams of the device that are assigned to transmit over this aggregator. For a system frequency of 60 Hz (50 Hz), the L90 generates a reporting mismatch message if the selected rate is not set as 10 Hz, 12 Hz, 15 Hz, 20 Hz, 30 Hz, 60 Hz, or 120 Hz (or 10 Hz, 25 Hz, 50 Hz, or 100 Hz when the system frequency is 50 Hz) when entered via the keypad or software; and the L90 stops the transmission of reports. Note that 4 Hz is not allowed for an M-class 50 Hz system.

PMU 1 f & df/dt FILTER

This setting allows applying post-filtering to the frequency and rate-of-change of-frequency to avoid reporting erroneous values, which can possibly happen during fault, switching, and other system disturbances. For example, choosing 20Hz/s <10Hz setting ensures that if rate-of-change of-frequency between current reporting instance and previous one exceeds 20Hz/s or frequency deviation from the nominal frequency exceeds 10Hz, then new frequency and rate-of-change of-frequency value are invalidated. If this happens, the previous valid value of the frequency is maintained and rate-of-change of-frequency value is forced to 0 at this reporting instance.

PMU 1 PHS-1 to PMU 1 PHS-14

These settings specify synchrophasors to be transmitted from the superset of all synchronized measurements. The table outlines available synchrophasor values.

Selection	Meaning
Va	First voltage channel, either Va or Vab
Vb	Second voltage channel, either Vb or Vbc
Vc	Third voltage channel, either Vc or Vca
Vx	Fourth voltage channel
Ia	Phase A current, physical channel or summation as per the source settings
Ib	Phase B current, physical channel or summation as per the source settings
Ic	Phase C current, physical channel or summation as per the source settings
Ig	Fourth current channel, physical or summation as per the source settings
V1	Positive-sequence voltage, referenced to Va
V2	Negative-sequence voltage, referenced to Va
V0	Zero-sequence voltage
I1	Positive-sequence current, referenced to Ia
I2	Negative-sequence current, referenced to Ia
I0	Zero-sequence current

These settings allow for optimizing the frame size and maximizing transmission channel usage, depending on a given application. Select “Off” to suppress transmission of a given value.

PMU 1 PHS-1 NM to PMU 1 PHS-14 NM

These settings allow for custom naming of the synchrophasor channels. Sixteen-character ASCII strings are allowed as in the CHNAM field of the configuration frame. These names are typically based on station, bus, or breaker names.

PMU 1 A-CH-1 to PMU 1 A-CH-16

These settings specify any analog data measured by the relay to be included as a user-selectable analog channel of the data frame. Up to eight analog channels can be configured to send any FlexAnalog value from the relay. Examples include frequency, rate of frequency change, active and reactive power, per phase or three-phase power, power factor, temperature via RTD inputs, and THD. The configured analog values are sampled concurrently with the synchrophasor instant and sent as 32-bit floating-point values scaled to Engineering units.

PMU 1 A-CH-1 NM to PMU 1 A-CH-16 NM

These settings allow for custom naming of the analog channels. Sixteen-character ASCII strings are allowed as in the CHNAM field of the configuration frame.

PMU 1 D-CH-1 to PMU 1 D-CH-16

These settings specify any digital flag measured by the relay to be included as a user-selectable digital channel of the data frame. Up to 16 digital channels can be configured to send any FlexLogic operand from the relay. The configured digital flags are sampled concurrently with the synchrophasor instant. These values are mapped into a two-byte integer number, with byte 1 LSB corresponding to the digital channel 1 and byte 2 MSB corresponding to digital channel 16.

PMU 1 D-CH-1 NM to PMU 1 D-CH-16 NM

These settings allow for custom naming of the digital channels. Sixteen-character ASCII strings are allowed as in the CHNAM field of the configuration frame.

PMU 1 D-CH-1 NORMAL STATE to PMU 1 D-CH-16 NORMAL STATE

These settings allow for specifying a normal state for each digital channel. These states are transmitted in configuration frames to the data concentrator.

Submenu for C37.118 configuration

The basic configuration men also contains a submenu for the C37.118 configuration as follows:

Setting path: ***SETTINGS > SYSTEM SETUP > PHASOR MEASUREMENT UNIT > PHASOR MEASUREMENT UNIT > PMU 1 BASIC CONFIGURATION > C37.118 PMU 1 CONFIGURATION***

■ C37.118 PMU 1 ■ CONFIGURATION	⇔	PMU 1 FORMAT: Integer	Range: Integer, Floating-point
	⇕	PMU 1 FREQ FORMAT: Integer	Range: Integer, Floating-point
	⇕	PMU 1 STYLE: Polar	Range: Polar, Rectangular

PMU 1 FORMAT

This setting selects whether synchrophasors are reported as 16-bit integers or 32-bit IEEE floating point numbers. This setting complies with bit-1 of the FORMAT field of the IEEE C37.118 configuration frame. This setting applies to synchrophasors only; user-selectable FlexAnalog channels are always transmitted as 16-bit integer values.

PMU 1 FREQ FORMAT

This setting selects between reporting frequency and rate-of-change-of-frequency as 16-bit integer or 32-bit IEEE floating point numbers. This setting complies with bit 3 of the FORMAT field of the C37.118 configuration frame.

PMU 1 STYLE

This setting selects whether synchrophasors are reported in rectangular (real and imaginary) coordinates or in polar (magnitude and angle) coordinates. This setting complies with bit-0 of the FORMAT field of the IEEE C37.118 configuration frame.

The basic configuration men also contains a submenu for the IEC61850-90-5 configuration as follows:

Setting path: ***SETTINGS > SYSTEM SETUP > PHASOR MEASUREMENT UNIT > PHASOR MEASUREMENT UNIT > PMU 1 BASIC CONFIGURATION > 90-5 PMU 1 CONFIGURATION***

■ 90-5 PMU 1 ■ CONFIGURATION	⇔	PMU 1 LDINST: PMU1	Range: 64 char ASCII text

> *Note:*
> *With 90-5 PMU, the FORMAT and STYLE are Floating-point and Polar respectively, as specified in the IEC 61850-90-5 technical report.*

9.5.7.2 PMU CALIBRATION

Up to six PMUs are available, depending on UR model and option choice. Only one is shown here.

Setting path: ***SETTINGS > SYSTEM SETUP > PHASOR MEASUREMENT UNIT > PHASOR MEASUREMENT UNIT <n> PMU <n> CALIBRATION***

■ PMU 1 ■ CALIBRATION	⇔	PMU 1 VA CALIBRATION ANGLE: 0.00°	Range: –5.00 to 5.00° in steps of 0.05
	⇕	PMU 1 VA CALIBRATION MAG: 100.0%	Range: 95.0 to 105.0 in steps of 0.1%
	⇕	PMU 1 VB CALIBRATION ANGLE: 0.00°	Range: –5.00 to 5.00° in steps of 0.05
	⇕	PMU 1 VB CALIBRATION MAG: 100.0%	Range: 95.0 to 105.0 in steps of 0.1%
	⇕	PMU 1 VC CALIBRATION ANGLE: 0.00°	Range: –5.00 to 5.00° in steps of 0.05
	⇕	PMU 1 VC CALIBRATION MAG: 100.0%	Range: 95.0 to 105.0 in steps of 0.1%
	⇕	PMU 1 VX CALIBRATION ANGLE: 0.00°	Range: –5.00 to 5.00° in steps of 0.05
	⇕	PMU 1 VX CALIBRATION MAG: 100.0%	Range: 95.0 to 105.0 in steps of 0.1%
	⇕	PMU 1 IA CALIBRATION ANGLE: 0.00°	Range: –5.00 to 5.00° in steps of 0.05
	⇕	PMU 1 IA CALIBRATION MAG: 100.0%	Range: 95.0 to 105.0 in steps of 0.1%
	⇕	PMU 1 IB CALIBRATION ANGLE: 0.00°	Range: –5.00 to 5.00° in steps of 0.05

⇕	PMU 1 IB CALIBRATION MAG: 100.0%	Range: 95.0 to 105.0 in steps of 0.1%
⇕	PMU 1 IC CALIBRATION ANGLE: 0.00°	Range: –5.00 to 5.00° in steps of 0.05
⇕	PMU 1 IC CALIBRATION MAG: 100.0%	Range: 95.0 to 105.0 in steps of 0.1%
⇕	PMU 1 IG CALIBRATION ANGLE: 0.00°	Range: –5.00 to 5.00° in steps of 0.05
⇕	PMU 1 IG CALIBRATION MAG: 100.0%	Range: 95.0 to 105.0 in steps of 0.1%
⇕	PMU 1 SEQ VOLT SHIFT ANGLE: 0°	Range: –180 to 180° in steps of 30
⇧	PMU 1 SEQ CURR SHIFT ANGLE: 0°	Range: –180 to 180° in steps of 30

This menu contains user angle and magnitude calibration data for the Phasor Measurement Unit (PMU). This data is combined with the factory adjustments to shift the phasors for better accuracy.

PMU 1 VA... IG CALIBRATION ANGLE

These settings recognize applications with protection class voltage and current sources, and they allow you to calibrate each channel (four voltages and four currents) individually to offset errors introduced by VTs, CTs, and cabling. The setting values are effectively added to the measured angles. Therefore, enter a positive correction when the secondary signal lags the true signal and a negative value when the secondary signal leads the true signal.

PMU 1 VA... IG CALIBRATION MAGNITUDE

These settings recognize applications with protection class voltage and current sources, and they allow you to calibrate each channel (four voltages and four currents) individually to offset errors introduced by VTs, CTs. The setting values are effectively a multiplier of the measured magnitudes. Therefore, entering a multiplier greater than 100% of the secondary signal increases the true signal, and a multiplier less than 100% value of the secondary signal reduces the true signal.

PMU 1 SEQ VOLT SHIFT ANGLE

This setting allows you to correct positive- and negative-sequence voltages for vector groups of power transformers located between the PMU voltage point and the reference node. This angle is effectively added to the positive-sequence voltage angle and subtracted from the negative-sequence voltage angle. Note that:

- When this setting is not “0°”, the phase and sequence voltages do not agree. Unlike sequence voltages, the phase voltages cannot be corrected in a general case and therefore are reported as measured.
- When receiving synchrophasor data at multiple locations, with possibly different reference nodes, it can be more beneficial to allow the central locations to perform the compensation of sequence voltages.
- This setting applies to PMU data only. The relay calculates symmetrical voltages independently for protection and control purposes without applying this correction.
- When connected to line-to-line voltages, the PMU calculates symmetrical voltages with the reference to the AG voltage and not to the physically connected AB voltage.

PMU 1 SEQ CURR SHIFT ANGLE

This setting allows you to correct positive and negative-sequence currents for vector groups of power transformers located between the PMU current point and the reference node. The setting has the same meaning for currents as the ***PMU 1 SEQ VOLT SHIFT ANGLE*** setting has for voltages. Normally, you would set the two correcting angles

identically, except in rare applications when the voltage and current measuring points are located at different windings of a power transformer.

9.5.7.3 PMU TRIGGERING OVERVIEW

Setting path: ***SETTINGS > SYSTEM SETUP > PHASOR MEASUREMENT UNIT > PHASOR MEASUREMENT UNIT 1 > PMU TRIGGERING***

■ PMU 1 ■ TRIGGERING	■ PMU 1 USER ■ TRIGGER
	■ PMU 1 FREQUENCY ■ TRIGGER
	■ PMU 1 VOLTAGE ■ TRIGGER
	■ PMU 1 CURRENT ■ TRIGGER
	■ PMU 1 POWER ■ TRIGGER
	■ PMU 1 df/dt ■ TRIGGER

Each Phasor Measurement Unit (PMU) contains five triggering mechanisms to facilitate triggering of the associated PMU recorder, or cross-triggering of other PMUs in the system. They are

- Overfrequency and underfrequency
- Overvoltage and undervoltage
- Overcurrent
- Overpower
- High rate of change of frequency

The pre-configured triggers can be augmented with a user-specified condition built freely using programmable logic of the relay. The entire triggering logic is refreshed once every two power system cycles. All five triggering functions and the user-definable condition are consolidated (ORed) and connected to the PMU recorder. Each trigger can be programmed to log its operation into the event recorder and to signal its operation via targets. The five triggers drive the STAT bits of the data frame to inform the destination of the synchrophasor data regarding the cause of trigger. The following convention is adopted to drive bits 11, 3, 2, 1, and 0 of the STAT word.

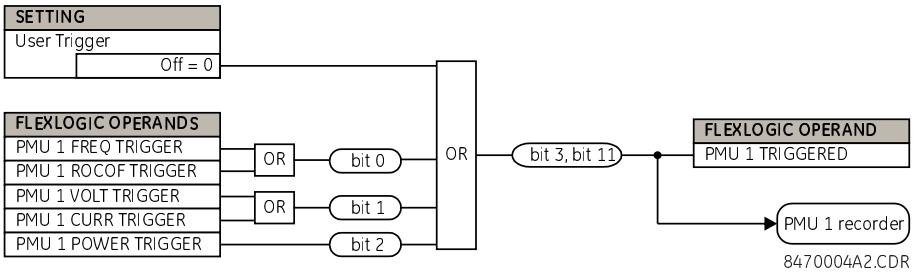

Figure 251: STAT bits logic

The trigger reset (drop-off) timer is available for all five triggering functions (FREQ, ROCOF, VOLT, CURR, POWER) in individual trigger settings under the ***TRIGGER DPO TIME*** setting. This asserts individual trigger operand and overall PMU x TRIGGERED operand with stat bits 3 and 11 for a fixed interval defined by this setting. If it is required that PMU x TRIGGERED operand with stat bits 3 and 11 stay longer than the individual reset timer, then use the ***PMU x USER TRIGGER*** setting assigned with appropriate elements and FlexLogic. In short, in case of ***USER TRIGGER***, the drop-off time needs to be implemented using FlexLogic.

9.5.7.3.1 USER TRIGGERING

Setting path: ***SETTINGS > SYSTEM SETUP > PHASOR MEASUREMENT UNIT > PHASOR MEASUREMENT UNIT 1 > PMU TRIGGERING > PMU 1 USER TRIGGER***

■ PMU 1 USER ■ TRIGGER	⇔	■ PMU 1 USER TRIGGER ■ Off	Range: FlexLogic operand

The user trigger allows you to construct customized triggering from FlexLogic. The entire triggering logic is refreshed every two power system cycles.

9.5.7.3.2 FREQUENCY TRIGGERING

Setting path: ***SETTINGS > SYSTEM SETUP > PHASOR MEASUREMENT UNIT > PHASOR MEASUREMENT UNIT 1 > PMU TRIGGERING > PMU 1 TRIGGERING > PMU 1 FREQUENCY TRIGGER***

■ PMU 1 FREQUENCY ■ TRIGGER	⇔	PMU 1 FREQ TRIGGER FUNCTION: Disabled	Range: Enabled, Disabled
	⇕	PMU 1 FREQ TRIGGER LOW-FREQ: 49.00 Hz	Range: 20.00 to 70.00 Hz in steps of 0.01
	⇕	PMU 1 FREQ TRIGGER HIGH-FREQ: 61.00 Hz	Range: 20.00 to 70.00 Hz in steps of 0.01
	⇕	PMU 1 FREQ TRIGGER PKP TIME: 0.10 s	Range: 0.00 to 600.00 s in steps of 0.01
	⇕	PMU 1 FREQ TRIGGER DPO TIME: 1.00 s	Range: 0.00 to 600.00 s in steps of 0.01
	⇕	PMU 1 FREQ TRIG BLK: Off	Range: FlexLogic operand
	⇕	PMU 1 FREQ TRIGGER TARGET: Self-reset	Range: Self-reset, Latched, Disabled
	⇑	PMU 1 FREQ TRIGGER EVENTS: Disabled	Range: Enabled, Disabled

The trigger responds to the frequency signal of the Phasor Measurement Unit (PMU) source. The frequency is calculated from a selection of phase voltages, auxiliary voltage, phase currents, and ground current, depending on the source configuration. This element requires that the frequency is above the minimum measurable value. If the frequency is below this value, the trigger drops out.

PMU 1 FREQ TRIGGER FUNCTION

This setting enables or disabled the frequency trigger function.

PMU 1 FREQ TRIGGER LOW-FREQ

This setting specifies the low threshold for the abnormal frequency trigger. The comparator applies a 0.02 Hz hysteresis.

PMU 1 FREQ TRIGGER HIGH-FREQ

This setting specifies the high threshold for the abnormal frequency trigger. The comparator applies a 0.02 Hz hysteresis.

PMU 1 FREQ TRIGGER PKP TIME

This setting is used to filter out spurious conditions and avoid unnecessary triggering of the recorder.

PMU 1 FREQ TRIGGER DPO TIME

This setting is used to extend the trigger after the situation returns to normal. This setting is important when using the recorder in forced mode (recording as long as the triggering condition is asserted).

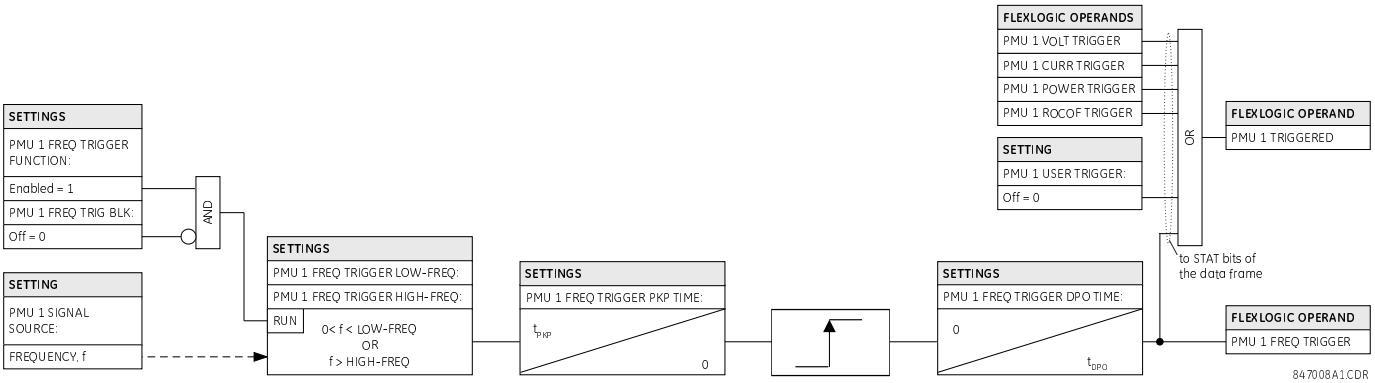

Figure 252: Frequency trigger logic

9.5.7.3.3 VOLTAGE TRIGGERING

Setting path: ***SETTINGS > SYSTEM SETUP > PHASOR MEASUREMENT UNIT > PHASOR MEASUREMENT UNIT 1 > PMU TRIGGERING > PMU 1 TRIGGERING > PMU 1 VOLTAGE TRIGGER***

■ PMU 1 VOLTAGE ■ TRIGGER	⇔	PMU 1 VOLT TRIGGER FUNCTION: Disabled — Range: Enabled, Disabled
	⇕	PMU 1 VOLT TRIGGER LOW-VOLT: 0.800 pu — Range: 0.250 to 1.250 pu in steps of 0.001
	⇕	PMU 1 VOLT TRIGGER HIGH-VOLT: 1.200 pu — Range: 0.750 to 1.750 pu in steps of 0.001
	⇕	PMU 1 VOLT TRIGGER PKP TIME: 0.10 s — Range: 0.00 to 600.00 s in steps of 0.01
	⇕	PMU 1 VOLT TRIGGER DPO TIME: 1.00 s — Range: 0.00 to 600.00 s in steps of 0.01
	⇕	PMU 1 VOLT TRIG BLK: Off — Range: FlexLogic operand
	⇕	PMU 1 VOLT TRIGGER TARGET: Self-reset — Range: Self-reset, Latched, Disabled
	⇑	PMU 1 VOLT TRIGGER EVENTS: Disabled — Range: Enabled, Disabled

This element responds to abnormal voltage. Separate thresholds are provided for low and high voltage. In terms of signaling its operation, the element does not differentiate between the undervoltage and overvoltage events. The trigger responds to the phase voltage signal of the Phasor Measurement Unit (PMU) source. All voltage channels (A, B, and C or AB, BC, and CA) are processed independently and can trigger the recorder. A minimum voltage supervision of 0.1 pu is implemented to prevent pickup on a de-energized circuit, similarly to the undervoltage protection element.

PMU 1 VOLT TRIGGER FUNCTION

This setting enables or disabled the voltage trigger function.

PMU 1 VOLT TRIGGER LOW-VOLT

This setting specifies the low threshold for the abnormal voltage trigger, in per-unit of the PMU source. 1 pu is a nominal voltage value defined as the nominal secondary voltage times VT ratio. The comparator applies a 1% hysteresis.

PMU 1 VOLT TRIGGER HIGH-VOLT

This setting specifies the high threshold for the abnormal voltage trigger, in per-unit of the PMU source. 1 pu is a nominal voltage value defined as the nominal secondary voltage times VT ratio. The comparator applies a 1% hysteresis.

PMU 1 VOLT TRIGGER PKP TIME

This setting is used to filter out spurious conditions and avoid unnecessary triggering of the recorder.

PMU 1 VOLT TRIGGER DPO TIME

This setting is used to extend the trigger after the situation returns to normal. This setting is important when using the recorder in the forced mode (recording as long as the triggering condition is asserted).

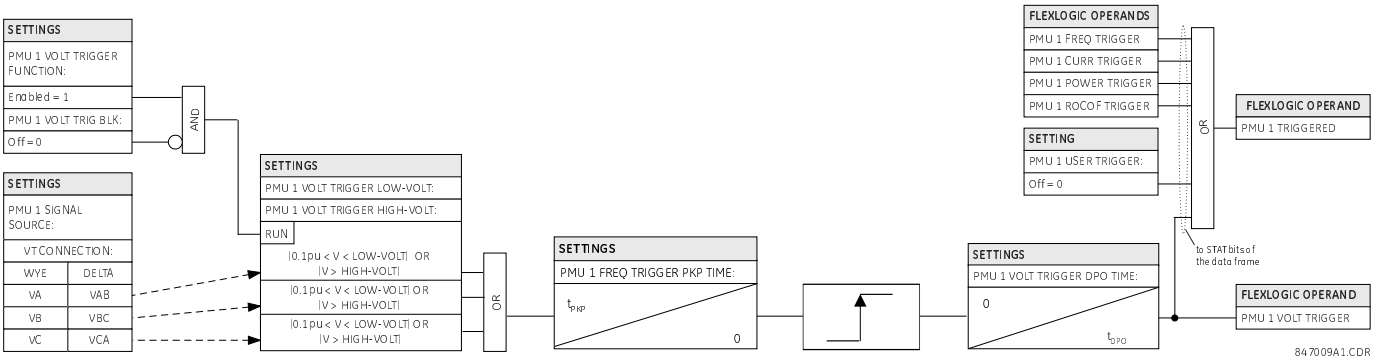

Figure 253: Voltage trigger logic

9.5.7.3.4 CURRENT TRIGGERING

Setting path: ***SETTINGS > SYSTEM SETUP > PHASOR MEASUREMENT UNIT > PHASOR MEASUREMENT UNIT 1 > PMU TRIGGERING > PMU 1 TRIGGERING > PMU 1 CURRENT TRIGGER***

■ PMU 1 CURRENT ■ TRIGGER	⇔	PMU 1 CURR TRIGGER FUNCTION: Disabled	Range: Enabled, Disabled
	⇕	PMU 1 CURR TRIGGER PICKUP: 1.800 pu	Range: 0.100 to 30.000 pu in steps of 0.001
	⇕	PMU 1 CURR TRIGGER PKP TIME: 0.10 s	Range: 0.00 to 600.00 s in steps of 0.01
	⇕	PMU 1 CURR TRIGGER DPO TIME: 1.00 s	Range: 0.00 to 600.00 s in steps of 0.01
	⇕	PMU 1 CURR TRIG BLK: Off	Range: FlexLogic operand
	⇕	PMU 1 CURR TRIGGER TARGET: Self-reset	Range: Self-reset, Latched, Disabled
	⇑	PMU 1 CURR TRIGGER EVENTS: Disabled	Range: Enabled, Disabled

This element responds to elevated current. The trigger responds to the phase current signal of the Phasor Measurement Unit (PMU) source. All current channel (A, B, and C) are processed independently and can trigger the recorder.

PMU 1 CURR TRIGGER FUNCTION

This setting enables or disabled the current trigger function.

PMU 1 CURR TRIGGER PICKUP

This setting specifies the pickup threshold for the overcurrent trigger, in per unit of the PMU source. A value of 1 pu is a nominal primary current. The comparator applies a 3% hysteresis.

PMU 1 CURR TRIGGER PKP TIME

This setting is used to filter out spurious conditions and avoid unnecessary triggering of the recorder.

PMU 1 CURR TRIGGER DPO TIME

This setting is used to extend the trigger after the situation returns to normal. This setting is important when using the recorder in the forced mode (recording as long as the triggering condition is asserted).

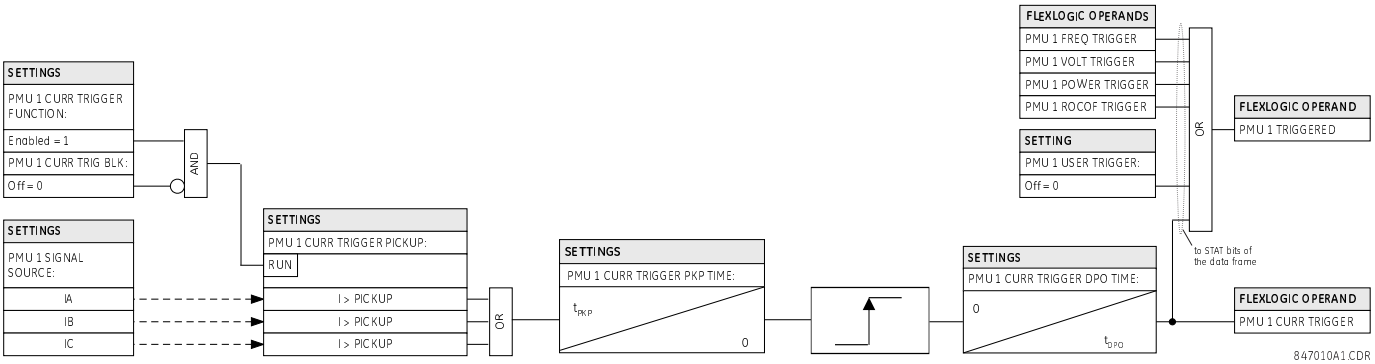

Figure 254: Current trigger logic

9.5.7.3.5 POWER TRIGGERING

Setting path: ***SETTINGS > SYSTEM SETUP > PHASOR MEASUREMENT UNIT > PHASOR MEASUREMENT UNIT 1 > PMU TRIGGERING > PMU 1 TRIGGERING > PMU 1 POWER TRIGGER***

■ PMU 1 POWER ■ TRIGGER	⇔	PMU 1 POWER TRIGGER FUNCTION: Disabled — Range: Enabled, Disabled
	⇕	PMU 1 POWER TRIGGER ACTIVE: 1.250 pu — Range: 0.250 to 3.000 pu in steps of 0.001
	⇕	PMU 1 POWER TRIGGER REACTIVE: 1.250 pu — Range: 0.250 to 3.000 pu in steps of 0.001
	⇕	PMU 1 POWER TRIGGER APPARENT: 1.250 pu — Range: 0.250 to 3.000 pu in steps of 0.001
	⇕	PMU 1 POWER TRIGGER PKP TIME: 0.10 s — Range: 0.00 to 600.00 s in steps of 0.01
	⇕	PMU 1 POWER TRIGGER DPO TIME: 1.00 s — Range: 0.00 to 600.00 s in steps of 0.01
	⇕	PMU 1 PWR TRIG BLK: Off — Range: FlexLogic operand
	⇕	PMU 1 POWER TRIGGER TARGET: Self-reset — Range: Self-reset, Latched, Disabled

⇧ PMU 1 POWER TRIGGER EVENTS: Disabled	Range: Enabled, Disabled

This element responds to abnormal power. Separate thresholds are provided for active, reactive, and apparent powers. In terms of signaling its operation, the element does not differentiate among the three types of power. The trigger responds to the single-phase and three-phase power signals of the Phasor Measurement Unit (PMU) source.

PMU 1 POWER TRIGGER FUNCTION

This setting enables or disabled the power trigger function.

PMU 1 POWER TRIGGER ACTIVE

This setting specifies the pickup threshold for the active power of the source. For single-phase power, 1 pu is a product of 1 pu voltage and 1 pu current, or the product of nominal secondary voltage, the VT ratio and the nominal primary current. For the three-phase power, 1 pu is three times that for a single-phase power. The comparator applies a 3% hysteresis.

PMU 1 POWER TRIGGER REACTIVE

This setting specifies the pickup threshold for the reactive power of the source. For single-phase power, 1 pu is a product of 1 pu voltage and 1 pu current, or the product of nominal secondary voltage, the VT ratio and the nominal primary current. For the three-phase power, 1 pu is three times that for a single-phase power. The comparator applies a 3% hysteresis.

PMU 1 POWER TRIGGER APPARENT

This setting specifies the pickup threshold for the apparent power of the source. For single-phase power, 1 pu is a product of 1 pu voltage and 1 pu current, or the product of nominal secondary voltage, the VT ratio and the nominal primary current. For the three-phase power, 1 pu is three times that for a single-phase power. The comparator applies a 3% hysteresis.

PMU 1 POWER TRIGGER PKP TIME

This setting is used to filter out spurious conditions and avoid unnecessary triggering of the recorder.

PMU 1 POWER TRIGGER DPO TIME

This setting is used to extend the trigger after the situation returns to normal. This setting is of particular importance when using the recorder in the forced mode (recording as long as the triggering condition is asserted).

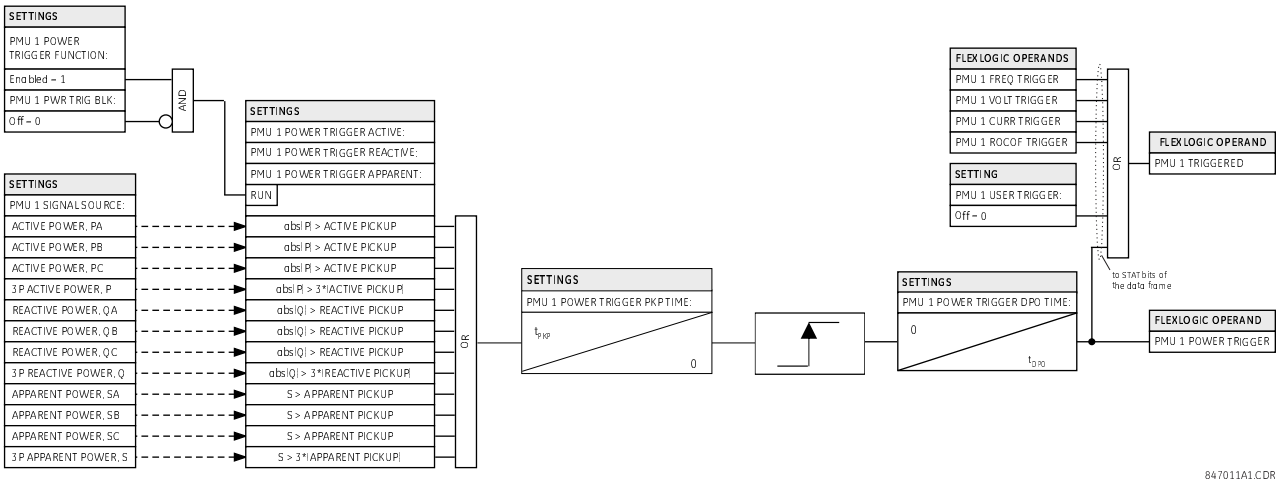

Figure 255: Power trigger logic

9.5.7.3.6 RATE OF CHANGE OF FREQUENCY TRIGGERING

Setting path: ***SETTINGS > SYSTEM SETUP > PHASOR MEASUREMENT UNIT > PHASOR MEASUREMENT UNIT 1 > PMU TRIGGERING > PMU 1 TRIGGERING > PMU 1 df/dt TRIGGER***

■ PMU 1 df/dt ■ TRIGGER	⇔	PMU 1 df/dt TRIGGER FUNCTION: Disabled	Range: Enabled, Disabled
	⇕	PMU 1 df/dt TRIGGER RAISE: 0.25 Hz/s	Range: 0.10 to 15.00 Hz/s in steps of 0.01
	⇕	PMU 1 df/dt TRIGGER FALL: 0.25 Hz/s	Range: 0.10 to 15.00 Hz/s in steps of 0.01
	⇕	PMU 1 df/dt TRIGGER PKP TIME: 0.10 s	Range: 0.00 to 600.00 s in steps of 0.01
	⇕	PMU 1 df/dt TRIGGER DPO TIME: 1.00 s	Range: 0.00 to 600.00 s in steps of 0.01
	⇕	PMU 1 df/dt TRG BLK: Off	Range: FlexLogic operand
	⇕	PMU 1 df/dt TRIGGER TARGET: Self-reset	Range: Self-reset, Latched, Disabled
	⇑	PMU 1 df/dt TRIGGER EVENTS: Disabled	Range: Enabled, Disabled

This element responds to frequency rate of change. Separate thresholds are provided for rising and dropping frequency. The trigger responds to the rate of change of frequency (df/dt) of the Phasor Measurement Unit (PMU) source.

PMU 1 df/dt TRIGGER FUNCTION

This setting enables or disabled the power trigger function.

PMU 1 df/dt TRIGGER RAISE

This setting specifies the pickup threshold for the rate of change of frequency in the raising direction (positive df/dt). The comparator applies a 4% hysteresis.

PMU 1 df/dt TRIGGER FALL

This setting specifies the pickup threshold for the rate of change of frequency in the falling direction (negative df/dt). The comparator applies a 4% hysteresis.

PMU 1 df/dt TRIGGER PKP TIME

This setting is used to filter out spurious conditions and avoid unnecessary triggering of the recorder.

PMU 1 df/dt TRIGGER DPO TIME

This setting is used to extend the trigger after the situation returns to normal. This setting is of importance when using the recorder in the forced mode (recording as long as the triggering condition is asserted).

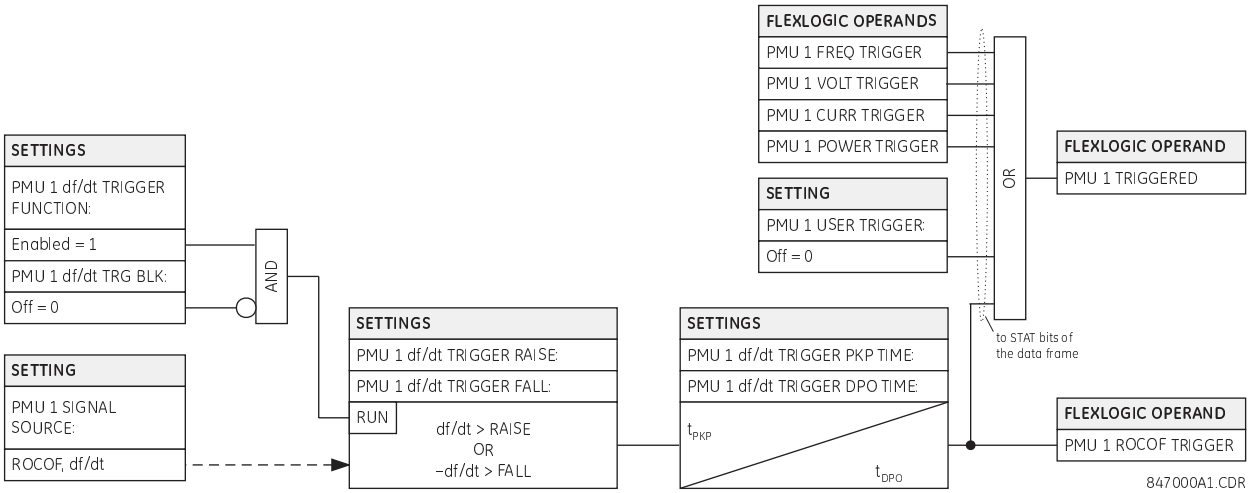

Figure 256: Rate of Change of frequency trigger logic

9.5.7.4 PMU RECORDING

Setting path: ***SETTINGS > SYSTEM SETUP > PHASOR MEASUREMENT UNIT > PHASOR MEASUREMENT UNIT 1 > PMU TRIGGERING > PMU 1 RECORDING***

■ PMU 1 ■ RECORDING	⇔	PMU 1 FUNCTION: Disabled	Range: Enabled, Disabled
	⇕	PMU 1 NO OF TIMED RECORDS: 10	Range: 2 to 128 in steps of 1
	⇕	PMU 1 TRIGGER MODE: Automatic Overwrite	Range: Automatic Overwrite, Protected
	⇧	PMU 1 TIMED TRIGGER POSITION: 10%	Range: 1 to 50% in steps of 1

The length of the PMU record is variable. It depends on some settings and configuration, such as ***PMU 1 NO OF TIMED RECORDS***, ***PMU 1 RATE***, the number of Synchrophasors etc. There is a fixed amount of data storage for PMU recording. The more records captured, the less the recording length captured per record. See the ***ACTUAL VALUES > RECORDS > PMU RECORDS > PMU 1 RECORDING*** menu to view the actual PMU record length captured per record. The following table provides sample configurations with corresponding seconds per record. The minimum number of PMU records is two. The third to fifth columns is the number of configured values recorded in each record.

Records	Frames per sec.	Synchrophasors	Analogs	Digitals	Record length
3	30	14	8	16	590.4
16	30	14	8	16	138.9
32	30	14	8	16	71.5
64	30	14	8	16	36.3
3	60	14	8	16	295.2
16	60	14	8	16	69.4
32	60	14	8	16	35.7
64	60	14	8	16	18.1

PMU 1 FUNCTION

This setting enables or disables the recorder for PMU 1. The rate is fixed at the reporting rate set within the aggregator.

PMU 1 NO OF TIMED RECORDS

This setting specifies the number of timed records that are available for a given logical PMU 1. The length of each record is equal to the available memory divided by the content size and number of records. As the number of records is increased, the available storage for each record is reduced. The relay supports a maximum of 128 records in either timed or forced mode.

PMU 1 TRIGGER MODE

This setting specifies what happens when the recorder uses its entire available memory storage. With *`Automatic Overwrite`*, the last record is erased to facilitate new recording, when triggered. Under the “Protected” selection, the recorder stops creating new records when the entire memory is used up by the old uncleared records.

PMU 1 TIMED TRIGGER POSITION

This setting specifies the amount of pre-trigger data as a percent of the entire record. This setting applies only to the timed mode of recording.

9.6 FLEXLOGIC SETTINGS

9.6.1 FLEXLOGIC EQUATION EDITOR

SETTINGS > FLEXLOGIC > FLEXLOGIC EQUATION EDITOR

■ FLEXLOGIC ■ EQUATION EDITOR	⇔	FLEXLOGIC ENTRY 1 END	Range: FlexLogic operands
	⇩		
	⇧	FLEXLOGIC ENTRY 1024 END1	Range: FlexLogic operands

There are 1,024 FlexLogic entries available, numbered from 1 to 1024, with default END entry settings. If a `Disabled` element is selected as a FlexLogic entry, the associated state flag is never set to 1. Press the +/– key when editing FlexLogic equations to quickly scan through the major parameter types.

There are two ways to create, edit and maintain the FlexLogic equations:

1. Using the FlexLogic Equation Editor available at **FlexLogic > FlexLogic Equation Editor**
2. Using the Logic Designer available at **Engineer > Logic Designer**

> *Note:*
> *EnerVista Engineer is only available through the offline window of the EnerVista UR Setup.*

> *Note:*
> *FlexLogic Equation Editor and Logic Designer are designed to be mutually exclusive as using them interchangeably to create, edit and maintain the FlexLogic equations may cause inconsistencies in the resulting equations. We recommend using only one of the two methods throughout the process.*

9.6.2 FLEXLOGIC TIMERS

SETTINGS > FLEXLOGIC > FLEXLOGIC TIMERS > FLEXLOGIC TIMER <n>

> *Note:*
> *Only FLEXLOGIC TIMER 1 is shown*

■ FLEXLOGIC ■ TIMER 1	⇔	TIMER 1 TYPE: millisecond	Range: millisecond, second, minute
	⇩	TIMER 1 PICKUP DELAY: 0	Range: 0 to 60000 in steps of 1
	⇧	TIMER 1 DROPOUT DELAY: 0	Range: 0 to 60000 in steps of 1

There are a number of identical FlexLogic timers available. These timers are used as operators for FlexLogic equations.

TIMER 1 TYPE

Selects the time measurement unit.

TIMER 1 PICKUP DELAY

Sets the time delay to pickup. If a pickup delay is not required, set this function to `0`.

TIMER 1 DROPOUT DELAY

Sets the time delay to dropout. If a dropout delay is not required, set this function to `0`.

9.6.3 FLEXELEMENTS

SETTINGS > FLEXLOGIC > FLEXELEMENTS > FLEXELEMENT <n>

> *Note:*
> *Only FLEXELEMENT 1 is shown*

■ FLEXELEMENT 1 ■	⇔	FLEXELEMENT 1 FUNCTION: Disabled	Range: Disabled, Enabled
	⇕	FLEXELEMENT 1 NAME: FxE 1	Range: up to six alphanumeric characters
	⇕	FLEXELEMENT 1 +IN: Off	Range: Off, any analog actual value parameter
	⇕	FLEXELEMENT 1 -IN: Off	Range: Off, any analog actual value parameter
	⇕	FLEXELEMENT 1 INPUT MODE: SIGNED	Range: SIGNED, ABSOLUTE
	⇕	FLEXELEMENT 1 COMP MODE: LEVEL	Range: LEVEL, DELTA
	⇕	FLEXELEMENT 1 DIRECTION: OVER	Range: OVER, UNDER
	⇕	FLEXELEMENT 1 PICKUP: 1.000 pu	Range: –90.000 to 90.000 pu in steps of 0.001
		FLEXELEMENT 1 HYSTERESIS: 3.0%	Range: 0.1 to 50.0% in steps of 0.1
		FLEXELEMENT 1 dt UNIT: Milliseconds	Range: Milliseconds, Seconds, Minutes
		FLEXELEMENT 1 dt: 20	Range: 20 to 86400 in steps of 1
		FLEXELEMENT 1 PKP DELAY: 0.000 s	Range: 0.000 to 65.535 s in steps of 0.001
		FLEXELEMENT 1 RST DELAY: 0.000 s	Range: 0.000 to 65.535 s in steps of 0.001
		FLEXELEMENT 1 BLK: Off	Range: FlexLogic operand
		FLEXELEMENT 1 TARGET: Self-reset	Range: Self-reset, Disabled, Latched
	⇧	FLEXELEMENT 1 EVENTS: Disabled	Range: Disabled, Enabled

A FlexElement is a universal comparator used to monitor any analog actual value calculated by the relay or a net difference of any two analog actual values of the same type. The effective operating signal can be treated as a signed number or its absolute value can be used.

FlexElements run every half power cycle (every four protection passes).

The element can be programmed to respond either to a signal level or to a rate-of-change (delta) over a pre-defined period of time. The output operand is asserted when the operating signal is higher than a threshold or lower than a threshold, as per your choice.

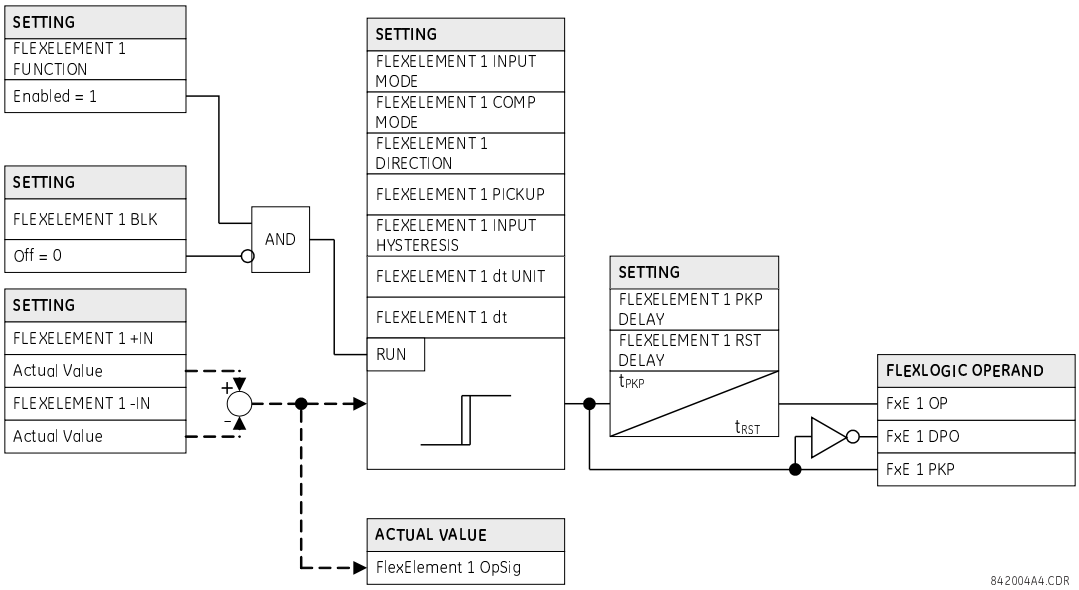

Figure 257: FlexElement logic

FLEXELEMENT 1 +IN

This setting specifies the first (non-inverted) input to the FlexElement. Zero is assumed as the input if this setting is set to `Off`. For proper operation of the element, at least one input must be selected. Otherwise, the element does not assert its output operands.

> *Note:*
> *Filter the InputPlus or InputMinus field in the software by double-clicking it, then entering a value.*

FLEXELEMENT 1 –IN

Specifies the second (inverted) input to the FlexElement. Zero is assumed as the input if this setting is set to `Off`. For proper operation of the element, at least one input must be selected. Otherwise, the element does not assert its output operands. This input is used to invert the signal if needed for convenience, or to make the element respond to a differential signal, such as for a top-bottom oil temperature differential alarm. The element does not operate if the two input signals are of different types, for example if one tries to use active power and phase angle to build the effective operating signal.

The element responds directly to the differential signal if the ***FLEXELEMENT 1 INPUT MODE*** setting is set to `Signed` The element responds to the absolute value of the differential signal if this setting is set to `Absolute`. Sample applications for the `Absolute` setting include monitoring the angular difference between two phasors with a symmetrical limit angle in both directions, monitoring power regardless of its direction, or monitoring a trend.

The element responds directly to its operating signal—as defined by the ***FLEXELEMENT 1 +IN***, ***FLEXELEMENT 1 –IN*** and ***FLEXELEMENT 1 INPUT MODE*** settings—if the ***FLEXELEMENT 1 COMP MODE*** setting is set to `Level`. The element responds to the rate of change of its operating signal if the ***FLEXELEMENT 1 COMP MODE*** setting is

set to `Delta`. In this case, the ***FLEXELEMENT 1 dt UNIT*** and ***FLEXELEMENT 1 dt*** settings specify how the rate of change is derived.

FLEXELEMENT 1 DIRECTION

Enables the relay to respond to either high or low values of the operating signal. The following figure explains the application of the ***FLEXELEMENT 1 DIRECTION, FLEXELEMENT 1 PICKUP***, and ***FLEXELEMENT 1 HYSTERESIS*** settings.

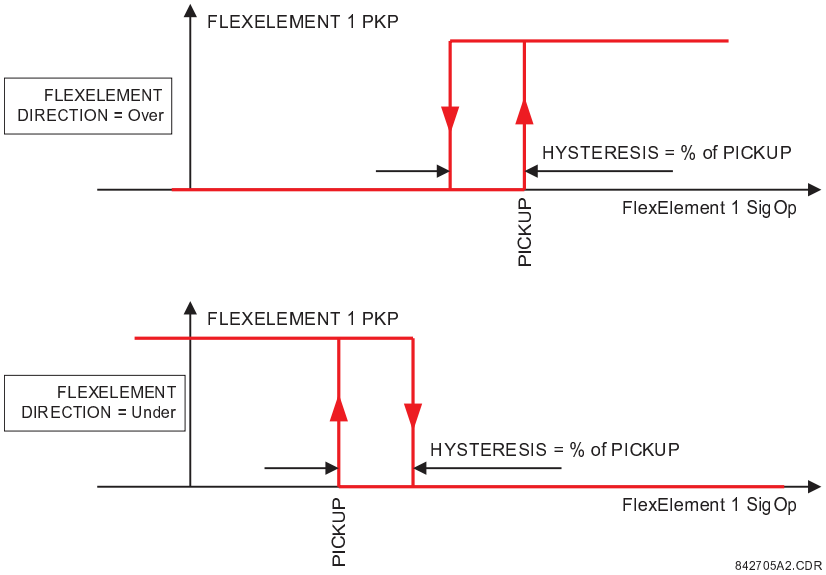

Figure 258: FlexElement direction, pickup, and hysteresis

In conjunction with the ***FLEXELEMENT 1 INPUT MODE*** setting, the element can be programmed to provide two extra characteristics, as shown in the following figure.

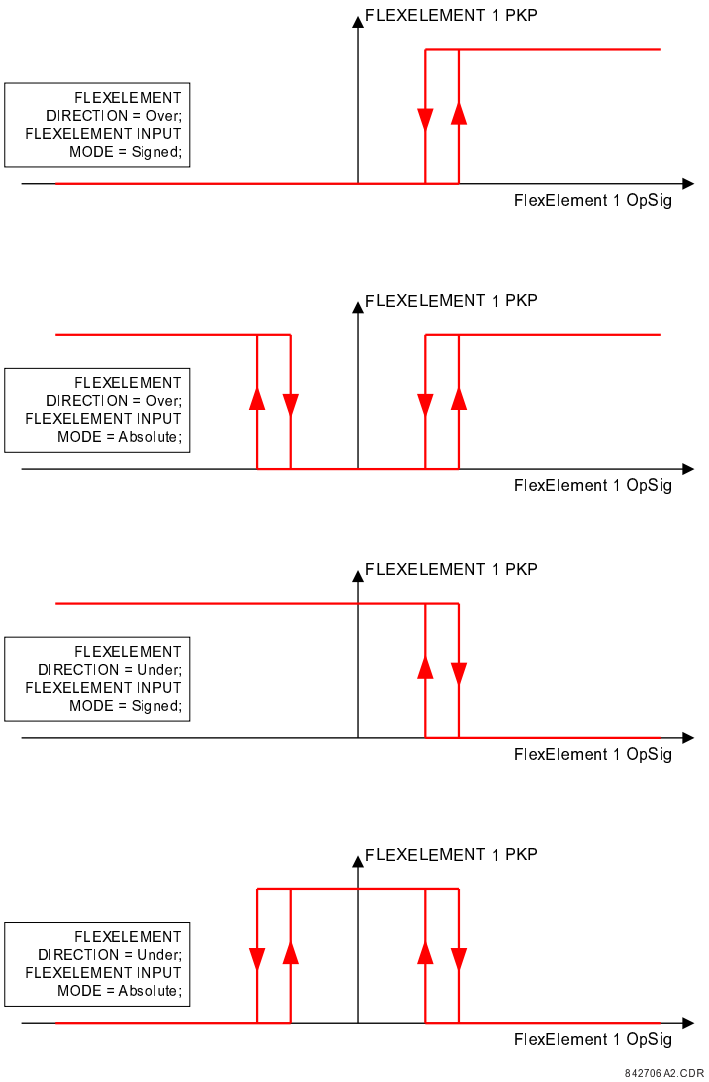

Figure 259: FlexElement input mode setting

FLEXELEMENT 1 PICKUP

This setting specifies the operating threshold for the effective operating signal of the element. If set to `Over`, the element picks up when the operating signal exceeds the ***FLEXELEMENT 1 PICKUP*** value. If set to `Under`, the element picks up when the operating signal falls below the ***FLEXELEMENT 1 PICKUP*** value.

When using FlexElements for Voltage Elements, 1 pu is always equal to phase to ground voltage nominal secondary voltage, even if you select a phase to phase voltage as an operating quantity. The ***FLEXELEMENT 1 PICKUP*** setting is entered in per-unit values using the definitions of the base units, as described later.

FLEXELEMENT 1 HYSTERESIS

This setting defines the pickup–dropout relation of the element by specifying the width of the hysteresis loop as a percentage of the pickup value as shown in the FlexElement Direction, Pickup, and Hysteresis diagram. The ***FLEXELEMENT 1 PICKUP*** setting is entered in per-unit values using the following definitions of the base units, shown in the next section.

FLEXELEMENT 1 dt UNIT

Specifies the time unit for the setting ***FLEXELEMENT 1 dt***. This setting is applicable only if ***FLEXELEMENT 1 COMP MODE*** is set to `Delta`.

FLEXELEMENT 1 dt

Specifies duration of the time interval for the rate of change mode of operation. This setting is applicable only if ***FLEXELEMENT 1 COMP MODE*** is set to `Delta`.

FLEXELEMENT 1 PKP DELAY

Specifies the pickup delay of the element.

FLEXELEMENT 1 RST DELAY

Specifies the reset delay of the element.

> *Note:*
> *The Bus Differential FlexAnalog parameters applied in the settings **FLEXELEMENT 1 +IN** and **FLEXELEMENT 1 -IN** must be from the same zone.*

9.6.3.1 FLEXELEMENT BASE UNITS

Unit	Description
87L SIGNALS (Local IA Mag, IB, and IC) (Diff Curr IA Mag, IB, and IC) (Terminal 1 IA Mag, IB, and IC) (Terminal 2 IA Mag, IB and IC)	IBASE = maximum primary RMS value of the +IN and –IN inputs (CT primary for source currents, and 87L source primary current for line differential currents) (L30, L90)
87L SIGNALS (Op Square Curr IA, IB, and IC) (Rest Square Curr IA, IB, and IC)	BASE = Squared CT secondary of the 87L source (L30, L90)
BREAKER ACC ARCING AMPS (Brk X Acc Arc Amp A, B, and C)	BASE = 2000 kA2 ´ cycle (All but B90, C30, N60)
BREAKER ARCING AMPS (Brk X Arc Amp A, B, and C)	BASE = 1 kA2 ´ cycle (All but B90, C30, N60)
BUS DIFFERENTIAL DIFFERENTIAL CURRENT (Bus Diff Mag)	IBASE = maximum phase CT primary current of all configured bays (sources) for a given bus differential zone of the +IN and –IN inputs (B30)
BUS DIFFERENTIAL RESTRAINING CURRENT (Bus Rest Mag)	IBASE = maximum phase CT primary current of all configured bays (sources) for a given bus differential zone of the +IN and –IN inputs (B30)
BUS GROUND DIFFERENTIAL DIFFERENTIAL CURRENT (Bus Ground Diff Mag)	IBASE = maximum ground CT primary current of all configured bays (sources) for a given bus differential zone of the +IN and –IN inputs for “Measured” option or maximum phase CT primary current for “Calculated” option. (B30)
BUS GROUND DIFFERENTIAL RESTRAINING CURRENT (Bus Ground Rest Mag)	IBASE = maximum ground CT primary current of all configured bays (sources) for a given bus differential zone of the +IN and –IN inputs for “Measured” option or maximum phase CT primary current for “Calculated” option. (B30)
CURRENT UNBALANCE (Amp Unbalance)	BASE = 100% (M60)
DCmA	BASE = maximum value of the DCMA INPUT MAX setting for the two transducers configured under the +IN and –IN inputs (All UR products)
DELTA TIME	BASE = 1 µs (All UR products)
FAULT LOCATION	BASE = Line Length as specified in Fault Report (C60, C95, D30, D60, F35, F60, L30, L60, L90)

Unit	Description
FIELD CURRENT	IBASE = maximum value setting defined for the specific transducer input configured (G60 only)
FIELD GROUND CURRENT	IBASE = 5 mA (G60 only)
FIELD GROUND FAULT LOCATION	BASE = 100% (G60 only)
FIELD GROUND INJECTED VOLTAGE	VBASE = 15 V (G60 only)
FIELD GROUND RESISTANCE	RBASE = 250 KΩ (G60 only)
FIELD VOLTAGE	VBASE = 500 V (G60 only)
FREQUENCY	fBASE = 1 Hz (All UR products)
FREQUENCY RATE OF CHANGE	df/dtBASE = 1 Hz/s (D30, D60, F60, G30, G60, L30, L90, N60, T60)
MSOD FREQ_OSC	1 Hz (D60, G30, G60, L90, N60, T60)
MSOD MAG_OSC	1 pu (D60, G30, G60, L90, N60, T60)
MSOD PHASE_OSC	360 degrees (D60, G30, G60, L90, N60, T60)
MSOD DAMPR_OSC	1% (D60, G30, G60, L90, N60, T60)
PHASE ANGLE	jBASE = 360 degrees (see the UR angle referencing convention) (All UR products)
POWER FACTOR	PFBASE = 1.00 (All UR products)
RTDs	BASE = 100°C (All UR products)
SENSITIVE DIR POWER (Sns Dir Power)	PBASE = maximum value of 3 x VBASE x IBASE for the +IN and –IN inputs of the sources configured for the sensitive power directional element(s). (C60, C95, D60, F60, G30, G60, L90, N60, T60)
SOURCE CURRENT	IBASE = maximum nominal primary RMS value of the +IN and –IN inputs (All UR products)
SOURCE ENERGY (Positive and Negative Watthours, Positive and Negative Varhours)	EBASE = 10000 MWh or MVAh, respectively (B30, C60, C95, D60, F35, F60, G30, G60, L90, M60, N60, T60
SOURCE POWER	PBASE = maximum value of VBASE x IBASE for the +IN and –IN inputs (All UR products)
SOURCE THD & HARMONICS	BASE = 1% C70, D60, F35, F60, G30, G60, L30, L90, N60, T60
SOURCE VOLTAGE	VBASE = maximum nominal primary RMS value of the +IN and –IN inputs (All UR products)
STATION BATTERY VOLTAGE MEASUREMENT	V_{DC_BASE} = ***STATION BATTERY NOM VOLTAG***E setting (All UR products)

Unit	Description
STATOR DIFFERENTIAL CURRENT (Stator Diff Iar, Ibr, and Icr)	IBASE = maximum primary RMS value of the +IN and –IN inputs (CT primary for source currents, and bus reference primary current for bus differential currents) (G60, M60)
STATOR GROUND 3RD HARMONIC VOLTAGES (Stator Gnd Vn/V0 3rd)	VBASE = Primary auxiliary voltage of the STATOR GROUND SOURCE (G60, M60)
STATOR GROUND RESISTANCE	RBASE = 10 KΩ (G60)
STATOR GROUND SUB-HARMONIC VOLTAGE	VBASE = nominal secondary voltage of auxiliary VT for the stator ground source (G60)
STATOR GROUND SUB-HARMONIC CURRENT	IBASE = ground CT primary current of stator ground source (G60)
STATOR RESTRAINING CURRENT (Stator Diff Iad, Ibd, and Icd)	IBASE = maximum primary RMS value of the +IN and –IN inputs (CT primary for source currents, and bus reference primary current for bus differential currents) (G60, M60)
SYNCHROCHECK (Max Delta Volts)	VBASE = maximum primary RMS value of all the sources related to the +IN and –IN inputs (B30, C60, C95, D30, D60, F60, G30, G60, L30, L60, L90, N60, T60)
THERMAL MODEL (Model Capacity Used) (Model Motor Unbalance)	BASE = 100% (M60)
THERMAL MODEL (Model Lockout Time)	BASE = 10 minutes (M60)
THERMAL MODEL (Thermal Model Load) (Biased Motor Load)	BASE = 1.00 pu of FLA (M60)
THERMAL MODEL (Trip Time on Overload)	BASE = 10 seconds (M60)
THRU FLT x TOT ACC A THRU FLT x TOT ACC B THRU FLT x TOT ACC C Transformer total thermal/mechanical damage	BASE = 1.00 pu (T35, T60)
VOLTS PER HERTZ	BASE = 1.00 pu (G30, G60, L90, T60)
XFMR DIFFERENTIAL CURRENT (Xfmr Iad, Ibd, and Icd Mag)	IBASE = maximum primary RMS value of the +IN and -IN inputs (CT primary for source currents, and transformer reference primary current for transformer differential currents) (G30, T35, T60)
XFMR VOLTAGE COMPENSATED DIFFERENTIAL CURRENT (Intturn# Cmp Iad Mag, Intturn# Cmp IBd Mag and Intturn# Cmp Icd Mag)	IBASE = maximum primary RMS value of the +IN and -IN inputs (CT primary for source currents, and transformer reference primary current for transformer differential currents) (T35, T60)
XFMR RAW DIFFERENTIAL CURRENT (Intturn# Raw Iad Mag, Intturn# Raw IBd Mag and Intturn# Raw Icd Mag)	IBASE = maximum primary RMS value of the +IN and -IN inputs (CT primary for source currents, and transformer reference primary current for transformer differential currents) (T35, T60)
INTERTURN FAULT DETECTION COEFFICENTS (Intturn# Coef Ka Mag, Intturn# Coef Kb Mag, Intturn# Coef Kc Mag)	BASE=0.1 (T35, T60)
XFMR DIFFERENTIAL HARMONIC CONTENT (Xfmr Harm2 Iad, Ibd, and Icd Mag) (Xfmr Harm5 Iad, Ibd, and Icd Mag)	BASE = 10% (G30, T35, T60)

Unit	Description
XFMR RESTRAINING CURRENT (Xfmr Iar, Ibr, and Icr Mag)	IBASE = maximum primary RMS value of the +IN and -IN inputs (CT primary for source currents, and transformer reference primary current for transformer differential currents) (G30, T35, T60)
ZBASE	ZBASE = PhaseVTSecondary / PhaseCTSecondary, where PhaseVTSecondary and PhaseCTSecondary are the secondary nominal voltage and the secondary nominal current of the distance source. In case multiple CT inputs are summed as one source current and mapped as the distance source, use the PhaseCTSecondary value from the CT with the highest primary nominal current. Distance source is specified in setting under SETTINGS > GROUPED ELEMENTS > SETTING GROUP 1(6) > DISTANCE. PhaseVTSecondary and PhaseCTSecondary are specified in setting under SETTINGS ðò SYSTEM SETUP ðò AC INPUTS. (D30, D60, G60, L60, L90, T60)

9.6.4 NON-VOLATILE LATCHES

SETTINGS > FLEXLOGIC > NON-VOLATILE LATCHES > LATCH <n>

> *Note:*
> *Only Latch 1 is shown*

■ LATCH 1 ■	⇔	LATCH 1 FUNCTION: Disabled	Range: Disabled, Enabled
	⇕	LATCH 1 ID: NV Latch 1	Range: up to 20 alphanumeric characters
	⇕	LATCH 1 TYPE: Reset Dominant	Range: Reset Dominant, Set Dominant
	⇕	LATCH 1 SET: Off	Range: FlexLogic operand
	⇕	LATCH 1 RESET: Off	Range: FlexLogic operand
	⇕	LATCH 1 TARGET: Self-reset	Range: Self-reset, Latched, Disabled
	⇧	LATCH 1 EVENTS: Disabled	Range: Disabled, Enabled

The non-volatile latches provide a permanent logical flag that is stored safely and do not reset upon restart after the relay is powered down. Typical applications include sustaining operator commands or permanently blocking relay functions, such as Autorecloser, until a deliberate interface action resets the latch.

LATCH 1 TYPE

This setting characterizes Latch 1 to be Set- or Reset-dominant.

LATCH 1 SET

If asserted, the specified FlexLogic operands sets Latch 1.

LATCH 1 RESET

If asserted, the specified FlexLogic operand resets Latch 1.

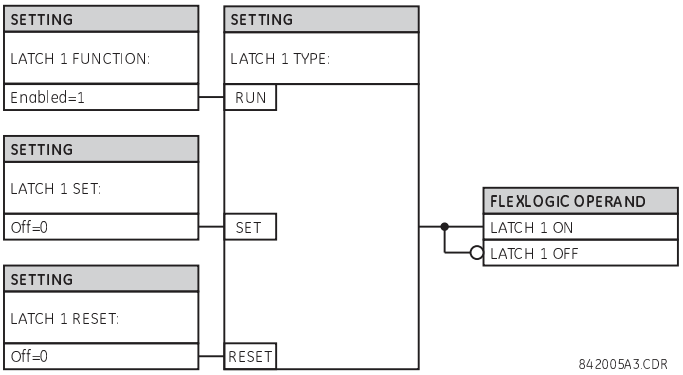

Latch n type	Latch n set	Latch n reset	Latch n on	Latch n off
Reset Dominant	ON	OFF	ON	OFF
	OFF	OFF	Previous State	Previous State
	ON	ON	OFF	ON
	OFF	ON	OFF	ON
Set Dominant	ON	OFF	ON	OFF
	ON	ON	ON	OFF
	OFF	OFF	Previous State	Previous State
	OFF	ON	OFF	ON

Figure 260: Non-volatile latch operation table and latch logic

9.7 GROUPED ELEMENTS

Each protection element can be assigned up to six sets of settings with designations 1 to 6. The performance of these elements is defined by the active setting group at a given time. Multiple setting groups allow the user to conveniently change protection settings for different operating situations (for example, altered power system configuration or season of the year). The active setting group can be preset or selected in the SETTING GROUPS menu.

9.7.1 SETTING GROUP 1

Each of the six setting group menus is identical. Setting group 1 (the default active group) is active automatically when no other group is active.

Setting path: ***SETTINGS > GROUPED ELEMENTS > SETTING GROUP 1(6)***

■ SETTING GROUP 1 ■	⇔	■ LINE PICKUP ■
	⇕	■ DISTANCE ■
	⇕	■ POWER SWING ■ DETECT
	⇕	■ LOAD ENCROACHMENT ■
	⇕	■ PHASE CURRENT ■
	⇕	■ NEUTRAL CURRENT ■
	⇕	■ WATTMETRIC ■ GROUND FAULT
	⇕	■ GROUND CURRENT ■
	⇕	■ NEGATIVE SEQUENCE ■ CURRENT
	⇕	■ BREAKER FAILURE ■
	⇕	■ STUB BUS ■
	⇕	■ VOLTAGE ELEMENTS ■
	⇑	■ POWER ■

9.7.2 LINE PICKUP

SETTINGS > GROUPED ELEMENTS > SETTING GROUP 1(6) > LINE PICKUP

■ LINE PICKUP ■	⇔	LINE PICKUP FUNCTION: Disabled	Range: Disabled, Enabled
	⇕	LINE PICKUP SIGNAL SOURCE: SRC 1	Range: SRC <n>

⇕	PHASE IOC LINE PICKUP: 1.000 pu	Range: 0.020 to 30.000 pu in steps of 0.001
⇕	LINE PICKUP UV PKP: 0.700 pu	Range: 0.004 to 3.000 pu in steps of 0.001
⇕	LINE END OPEN PICKUP DELAY: 0.150 s	Range: 0.000 to 65.535 s in steps of 0.001
⇕	LINE END OPEN RESET DELAY: 0.090 s	Range: 0.000 to 65.535 s in steps of 0.001
⇕	LINE PICKUP OV PKP DELAY: 0.040 s	Range: 0.000 to 65.535 s in steps of 0.001
⇕	AR CO-ORD BYPASS: Enabled	Range: Disabled, Enabled
⇕	AR CO-ORD PICKUP DELAY: 0.045 s	Range: 0.000 to 65.535 s in steps of 0.001
⇕	AR CO-ORD RESET DELAY: 0.005 s	Range: 0.000 to 65.535 s in steps of 0.001
⇕	TERMINAL OPEN: Off	Range: FlexLogic operand
⇕	AR ACCELERATE: Off	Range: FlexLogic operand
⇕	LINE PICKUP DISTANCE TRIP: Enabled	Range: Disabled, Enabled
⇕	LINE PICKUP BLOCK: Off	Range: FlexLogic operand
⇕	LINE PICKUP TARGET: Self-reset	Range: Self-reset, Latched, Disabled
⇧	LINE PICKUP EVENTS: Disabled	Range: Disabled, Enabled

The line pickup feature uses a combination of undercurrent and undervoltage to identify a line that has been de-energized (line end open). Alternately assign a FlexLogic operand to the ***TERMINAL OPEN*** setting that specifies the terminal status. Three instantaneous overcurrent elements are used to identify a previously de-energized line that has been closed onto a fault. Faults other than close-in faults can be identified satisfactorily with the distance elements.

Co-ordination features are included to ensure satisfactory operation when high-speed automatic reclosure (AR) is employed. The ***AR CO-ORD DELAY*** setting allows the overcurrent setting to be below the expected load current seen after reclose. Co-ordination is achieved by all of the ***LINE PICKP UV*** elements resetting and blocking the trip path before the ***AR CO-ORD DELAY*** times out. The ***AR CO-ORD BYPASS*** setting is normally enabled. It is disabled if high speed autoreclosure is implemented.

The line pickup protection incorporates zone 1 extension capability. When the line is being re-energized from the local terminal, pickup of an overreaching zone 2 or excessive phase current within eight power cycles after the autorecloser issues a close command results in the LINE PICKUP RCL TRIP FlexLogic operand. For security, the overcurrent trip is supervised by an undervoltage condition, which in turn is controlled by the VT FUSE FAIL OP operand with a 10 ms coordination timer. If a trip from distance is not required, then it can be disabled with the ***LINE PICKUP DISTANCE TRIP*** setting. Configure the LINE PICKUP RCL TRIP operand to perform a trip action if the intent is zone 1 extension.

The zone 1 extension philosophy used here normally operates from an under-reaching zone, and it uses an overreaching distance zone when reclosing the line with the other line end open. The ***AR ACCELERAT***E setting is provided to achieve zone 1 extension functionality if external autoreclosure is employed. Another zone 1 extension

approach is to apply permanently an overreaching zone, and reduce the reach when reclosing. This philosophy can be programmed via the autoreclose scheme.

LINE PICKUP FUNCTION

This setting enables and disables the line pickup feature.

LINE PICKUP SIGNAL SOURCE

Selects the signal source for line pickup protection.

PHASE IOC LINE PICKUP

Specifies the level of line current required to declare a line pickup operation when the line is re-energized.

LINE END OPEN PICKUP DELAY

Specifies the time during which the line is de-energized before the line pickup logic is armed.

LINE END OPEN RESET DELAY

Specifies the time during which the line pickup logic remains armed once the line has been re-energized.

AR CO-ORD BYPASS

The coordination timer allows the overcurrent detector to be set below the expected load current seen after reclose. When this setting is enabled (the default value), the coordination timer is bypassed. Disable this setting (removing the bypass and inserting the timer) if high speed autoreclosure is employed.

AR CO-ORD PICKUP DELAY

If the setting of the overcurrent detector is less than the load current, then it picks up during a normal re-energization of the line. This setting delays the assertion of the LINE PICKUP OP operand, allowing the recovery of the line voltage to block the scheme.

AR CO-ORD RESET DELAY

This setting extends the assertion of the line pickup output when autoreclose coordination is not bypassed.

TERMINAL OPEN

This setting allows the line pickup element to be armed from a status signal (such as breaker position) rather than from current and voltage. The FlexLogic operand assigned to this setting indicates that the terminal is opened. It can be derived by combining the status of several devices in a FlexLogic equation.

AR ACCELERATE

This setting provides zone 1 extension functionality if external autoreclosure is employed.

LINE PICKUP BLOCK

Assertion of the FlexLogic operand assigned to this setting blocks operation of the line pickup element.

LINE PICKUP EVENTS

This setting enables and disables the logging of line pickup events in the sequence of events recorder.

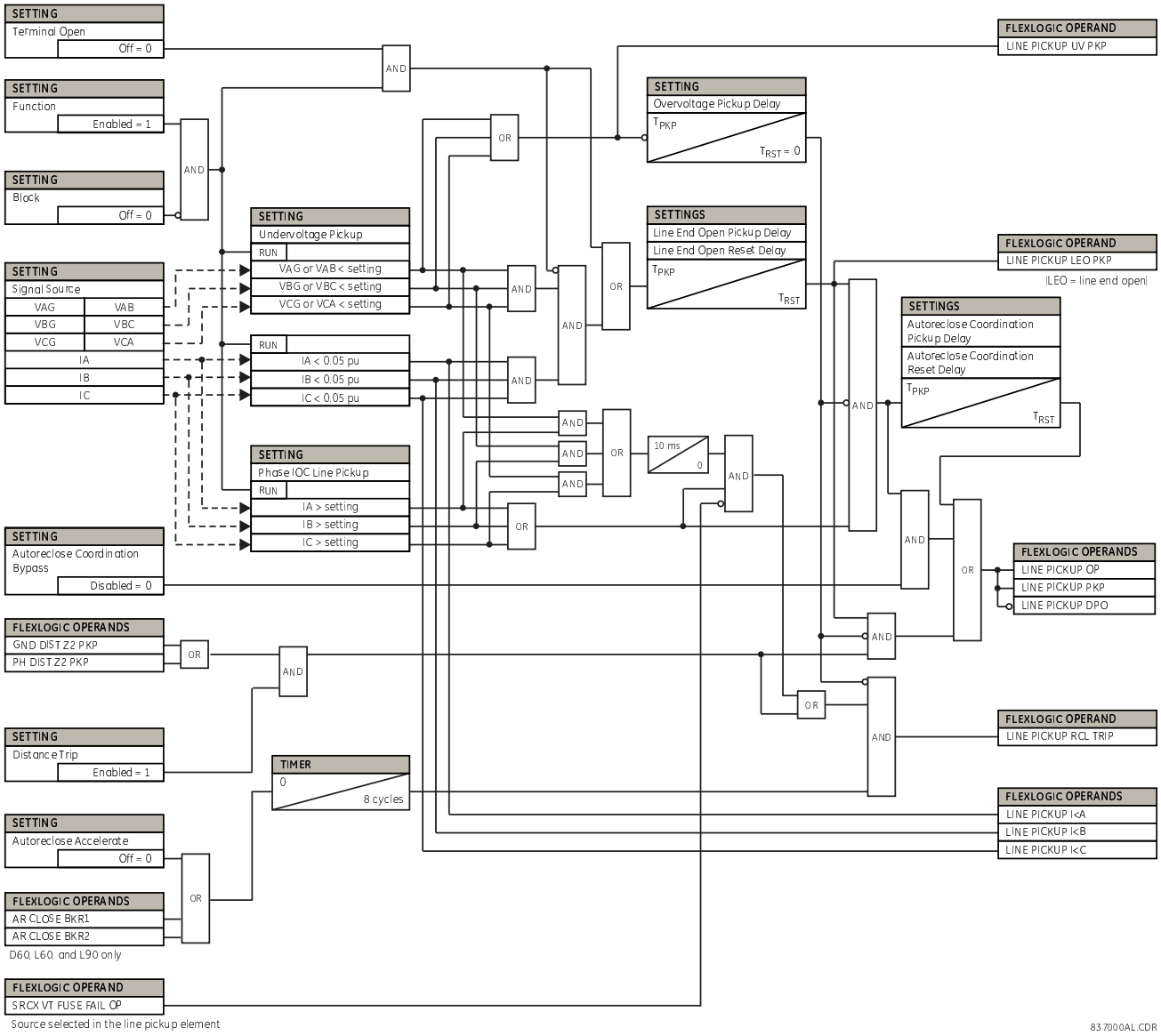

Figure 261: Line pickup logic

9.7.3 DISTANCE

9.7.3.1 DISTANCE MENU

SETTINGS > GROUPED ELEMENTS > SETTING GROUP 1(6) > DISTANCE

■ DISTANCE ■	⇔	DISTANCE SOURCE: SRC 1 — Range: SRC <n>
	⇕	MEMORY DURATION: 10 cycles — Range: 5 to 25 cycles in steps of 1
	⇕	FORCE SELF-POLAR: Off — Range: FlexLogic operand
	⇕	FORCE MEM-POLAR: Off — Range: FlexLogic operand
	⇕	FAST DISTANCE: Disabled — Range: Disabled, Enabled

	GND DIST ZERO-SEQ: DIR SUPV: Built-In	Range: Built-In, Disabled, Custom (not G60)
	GND DIR SUPV CUSTOM: Off	Range: FlexLogic operand (not G60)
⇕	PH DIST PH SELECT SUPV: Enabled	Range: Disabled, Enabled
⇕	SUBCYCLE DISTANCE: Enabled	Range: Disabled, Enabled D60 and L90 only
⇕	CVT TYPE: Magnetic VT	Range: Magnetic VT, Passive CVT, Active CVT D60 and L90 only
⇕	■ PHASE DISTANCE Z<n> ■	
⇧	■ GROUND DISTANCE Z<n> ■	Not G60

Note:
The FAST DISTANCE and SUBCYCLE DISTANCE options are mutually exclusive software options. The CVT TYPE setting displays with the Distance Adaptation software option.

DISTANCE SOURCE

Identifies the signal source for all distance functions. The mho distance functions use a dynamic characteristic; the positive-sequence voltage—either memorized or actual—is used as a polarizing signal. The memory voltage is also used by the built-in directional supervising functions applied for both the mho and quad characteristics.

MEMORY DURATION

Specifies the length of time that a memorized positive-sequence voltage is used in the distance calculations. After this interval expires, the relay checks the magnitude of the actual positive-sequence voltage. If it is higher than 10% of the nominal, the actual voltage is used, and if lower the memory voltage continues to be used.

The memory is established when the positive-sequence voltage stays above 80% of its nominal value for five power system cycles. For this reason, it is important to ensure that the nominal secondary voltage of the VT is entered correctly under the ***SETTINGS > SYSTEM SETUP > AC INPUTS > VOLTAGE BANK*** menu.

Set ***MEMORY DURATION*** long enough to ensure stability on close-in reverse three-phase faults. For this purpose, consider the maximum fault clearing time (breaker fail time) in the substation. On the other hand, the ***MEMORY DURATION*** cannot be too long as the power system can experience power swing conditions rotating the voltage and current phasors slowly while the memory voltage is static, as frozen at the beginning of the fault. Keeping the memory in effect for too long can eventually lead to incorrect operation of the distance functions.

The distance zones can be forced to become self-polarized through the ***FORCE SELF-POLAR*** setting. Any user-selected condition (any FlexLogic operand) can be configured to force self-polarization. When the selected operand is asserted (logic 1), the distance functions become self-polarized regardless of other memory voltage logic conditions. When the selected operand is de-asserted (logic 0), the distance functions follow other conditions of the memory voltage logic as shown in the following logic diagram.

The distance zones can be forced to become memory-polarized through the ***FORCE MEM-POLAR*** setting. Any user-selected condition (any FlexLogic operand) can be configured to force memory polarization. When the selected operand is asserted (logic 1), the distance functions become memory-polarized regardless of the positive-sequence voltage magnitude at this time. When the selected operand is de-asserted (logic 0), the distance functions follow other conditions of the memory voltage logic.

Never let the ***FORCE SELF-POLAR*** and ***FORCE MEM-POLAR*** settings to be asserted simultaneously. If this happens, the logic gives higher priority to forcing self-polarization as indicated in the logic diagram. This is consistent with the overall philosophy of distance memory polarization.

> *Note:*
> *The memory polarization cannot be applied permanently but for a limited time only. The self-polarization can be applied permanently and therefore takes higher priority.*

FAST DISTANCE

Enables the fast distance algorithm in phase and ground zone 1 and zone 2. Disable fast distance for distance protection applications on a series compensated line.

GND DIST ZERO-SEQ DIR SUPV

When set to BUILT-IN, the ground distance zone 2 and above are supervised by additional zero-sequence directional comparator (Refer Directional supervision for ground distance zone2 and above section). To replace this Zero-Seq directional comparator, set it to CUSTOM, and set the relevant operand in ***GND DIR SUPV CUSTOM*** setting. When set to DISABLED, ground distance zone 2 and above are not supervised by this additional directional comparator i.e., the respective directional operands for ground distance zone 2 and above will be defaulted to high.

GND DIR SUPV CUSTOM

The Operands assigned to this setting will be used to replace the built-in Zero-seq directional comparator e.g., neutral directional with offset feature can be used for series compensated lines. This setting will be in effect only when ***GND DIST ZERO-SEQ DIR SUPV*** is set to CUSTOM.

PH DIST PH SELECT SUPV

Enables phase selection supervision on phase distance zone 1 to zone 3.

SUBCYCLE DISTANCE

Enables the subcycle distance algorithm in phase and ground distance zone 1, 2, and 4. Disable subcycle distance for distance protection applications on a series compensated line.

The subcycle distance algorithm is not activated for a distance zone that is configured to one of the following conditions:

- The dynamic reach control for series-compensated line is selected with a non-zero value for the voltage level setting
- Non-directional option is selected in the Direction setting
- Phase distance applications through power transformers, that is, when either the ***XFMR VOL CONNECTION*** or ***XFMR CUR CONNECTION*** setting is set to a value other than `None`

CVT TYPE

Identifies the VT type used for voltage input in the distance element source. Magnetic VT gives the best performance but is not used for high voltage applications.

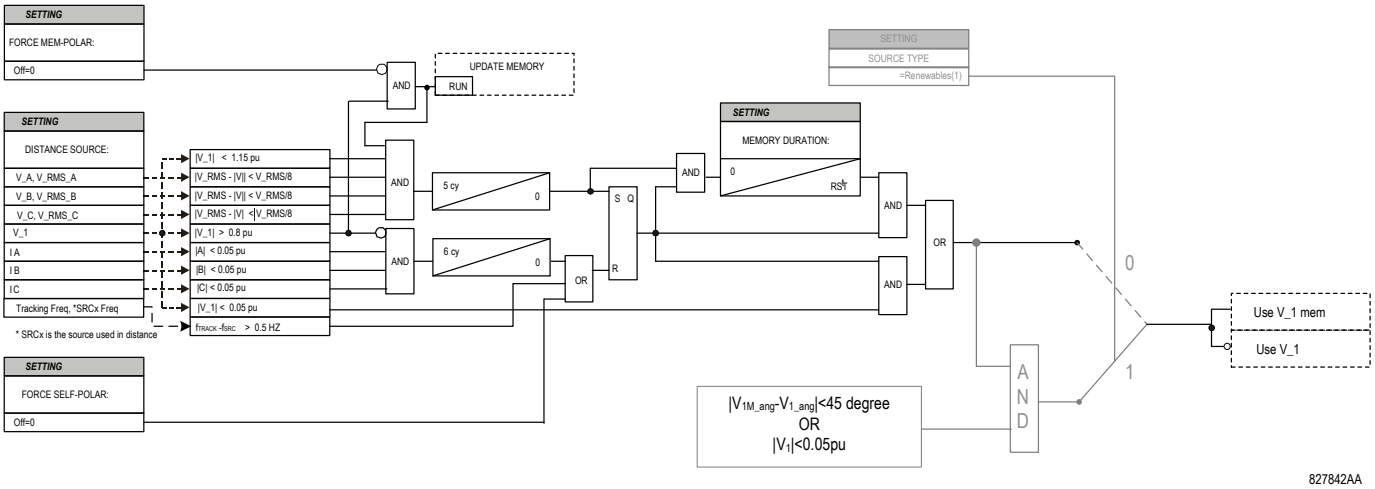

Figure 262: Memory voltage logic

9.7.3.2 PHASE DISTANCE

SETTINGS > GROUPED ELEMENTS > SETTING GROUP 1(6) > DISTANCE > PHASE DISTANCE Z<n>

> *Note:*
> *Only Phase Distance Z1 is shown*

■ PHASE DISTANCE Z1 ■	⇔	PHS DIST Z1 FUNCTION: Disabled	Range: Disabled, Enabled
	⇕	PHS DIST Z1 DIR: Forward	Range: Forward, Reverse, Non-directional
	⇕	PHS DIST Z1 SHAPE: Mho	Range: Mho, Quad
	⇕	PHS DIST Z1 XFMR VOL CONNECTION: None	Range: None, Dy1, Dy3, Dy5, Dy7, Dy9, Dy11, Yd1, Yd3, Yd5, Yd7, Yd9, Yd11
	⇕	PHS DIST Z1 XFMR CUR CONNECTION: None	Range: None, Dy1, Dy3, Dy5, Dy7, Dy9, Dy11, Yd1, Yd3, Yd5, Yd7, Yd9, Yd11
	⇕	PHS DIST Z1 REACH: 2.00 Ω	Range: 0.02 to 500.00 ohms in steps of 0.01
	⇕	PHS DIST Z1 RCA: 85°	Range: 30 to 90° in steps of 1
	⇕	PHS DIST Z1 REV REACH: 2.00 Ω	Range: 0.02 to 500.00 ohms in steps of 0.01
	⇕	PHS DIST Z1 REV REACH RCA: 85°	Range: 30 to 90° in steps of 1
	⇕	PHS DIST Z1 COMP LIMIT: 90°	Range: 30 to 90° in steps of 1
	⇕	PHS DIST Z1 DIR RCA: 85°	Range: 30 to 90° in steps of 1
	⇕	PHS DIST Z1 DIR COMP LIMIT: 90°	Range: 30 to 90° in steps of 1

⇕	PHS DIST Z1 QUAD RGT BLD: 10.00 Ω	Range: 0.02 to 500.00 ohms in steps of 0.01
⇕	PHS DIST Z1 QUAD RGT BLD RCA: 85°	Range: 60 to 90° in steps of 1
⇕	PHS DIST Z1 QUAD LFT BLD: 10.00 Ω	Range: 0.02 to 500.00 ohms in steps of 0.01
⇕	PHS DIST Z1 QUAD LFT BLD RCA: 85°	Range: 60 to 90° in steps of 1
⇕	PHS DIST Z1 SUPV: 0.200 pu	Range: 0.050 to 30.000 pu in steps of 0.001
⇕	PHS DIST Z1 VOLT LEVEL: 0.000 pu	Range: 0.000 to 5.000 pu in steps of 0.001
	PHS DIST Z1 DELAY: 0.000 s	Range: 0.000 to 65.535 s in steps of 0.001
⇕	PHS DIST Z1 BLK: Off	Range: FlexLogic operand
⇕	PHS DIST Z1 TARGET: Self-reset	Range: Self-reset, Latched, Disabled
⇧	PHS DIST Z1 EVENTS: Disabled	Range: Disabled, Enabled

Note:
Zone 6 requires a Distance Adaptation Package software option..

The phase mho distance function uses a dynamic 100% memory-polarized mho characteristic with additional reactance, directional, and overcurrent supervising characteristics. When set to `Non-directional`, the mho function becomes an offset mho with the reverse reach controlled independently from the forward reach, and all the directional characteristics removed.

The phase quadrilateral distance function has a reactance characteristic, right and left blinders, and 100% memory-polarized directional and current supervising characteristics. When set to `Non-directional`, the quadrilateral function applies a reactance line in the reverse direction instead of the directional comparators.

Each phase distance zone is configured individually through its own setting menu. All of the settings can be independently modified for each of the zones except:

The ***SIGNAL SOURCE*** setting (common for the distance elements of all zones as entered under ***SETTINGS > GROUPED ELEMENTS > SETTING GROUP 1(6) > DISTANCE***)

The ***MEMORY DURATION*** setting (common for the distance elements of all zones as entered under ***SETTINGS > GROUPED ELEMENTS > SETTING GROUP 1(6) > DISTANCE***)

The common distance settings described earlier must be chosen properly for correct operation of the phase distance elements.

Note:
Although all zones can be used as either instantaneous elements or time-delayed elements, only zone 1 is intended for the instantaneous under-reaching tripping mode.

Note:
Ensure that the Phase VT Secondary Voltage setting (see the SETTINGS ðò SYSTEM SETUP ð AC INPUTS ðò VOLTAGE BANK menu) is set correctly to prevent improper operation of associated memory action.

PHS DIST Z1 DIR

All phase distance zones are reversible. The forward direction is defined by the ***PHS DIST Z1 RCA*** setting, whereas the reverse direction is shifted 180° from that angle. The non-directional zone spans between the forward reach impedance defined by the ***PHS DIST Z1 REACH*** and ***PHS DIST Z1 RCA*** settings, and the reverse reach impedance defined by ***PHS DIST Z1 REV REACH*** and ***PHS DIST Z1 REV REACH RCA*** as illustrated in the following figures.

PHS DIST Z1 SHAPE

This setting selects the shape of the phase distance function between the mho and quadrilateral characteristics. The selection is available on a per-zone basis. The two characteristics and their possible variations are shown in the following figures.

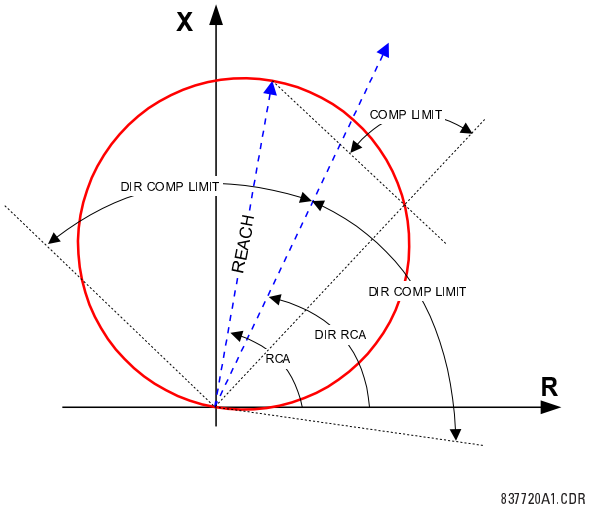

Figure 263: Directional mho phase distance characteristic

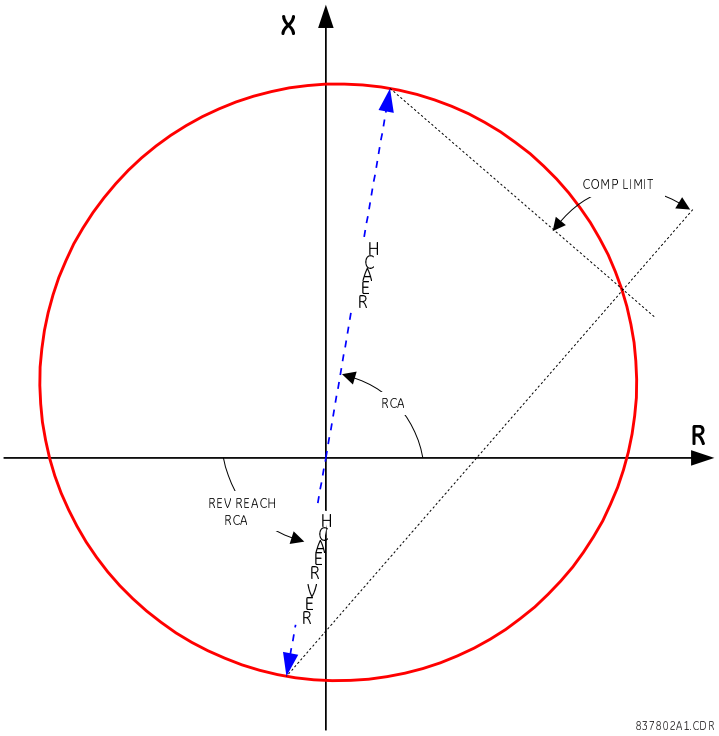

Figure 264: Non-directional mho phase distance characteristic

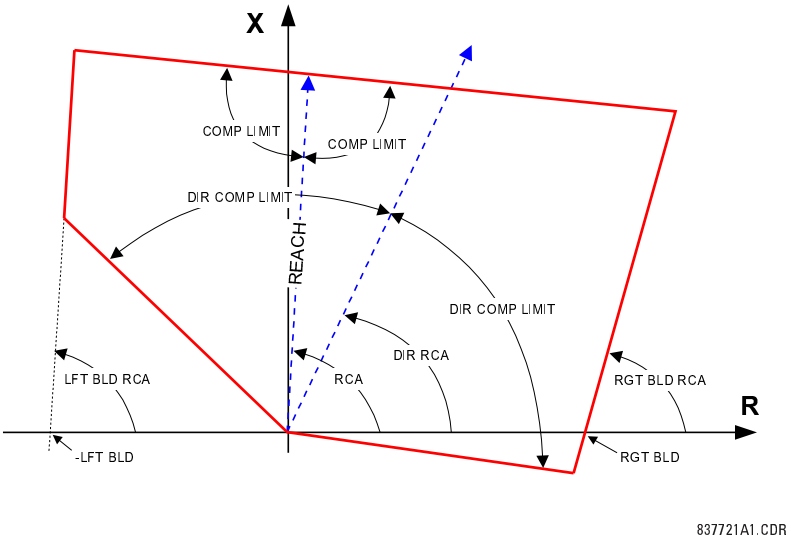

Figure 265: Directional quadrilateral phase distance characteristic

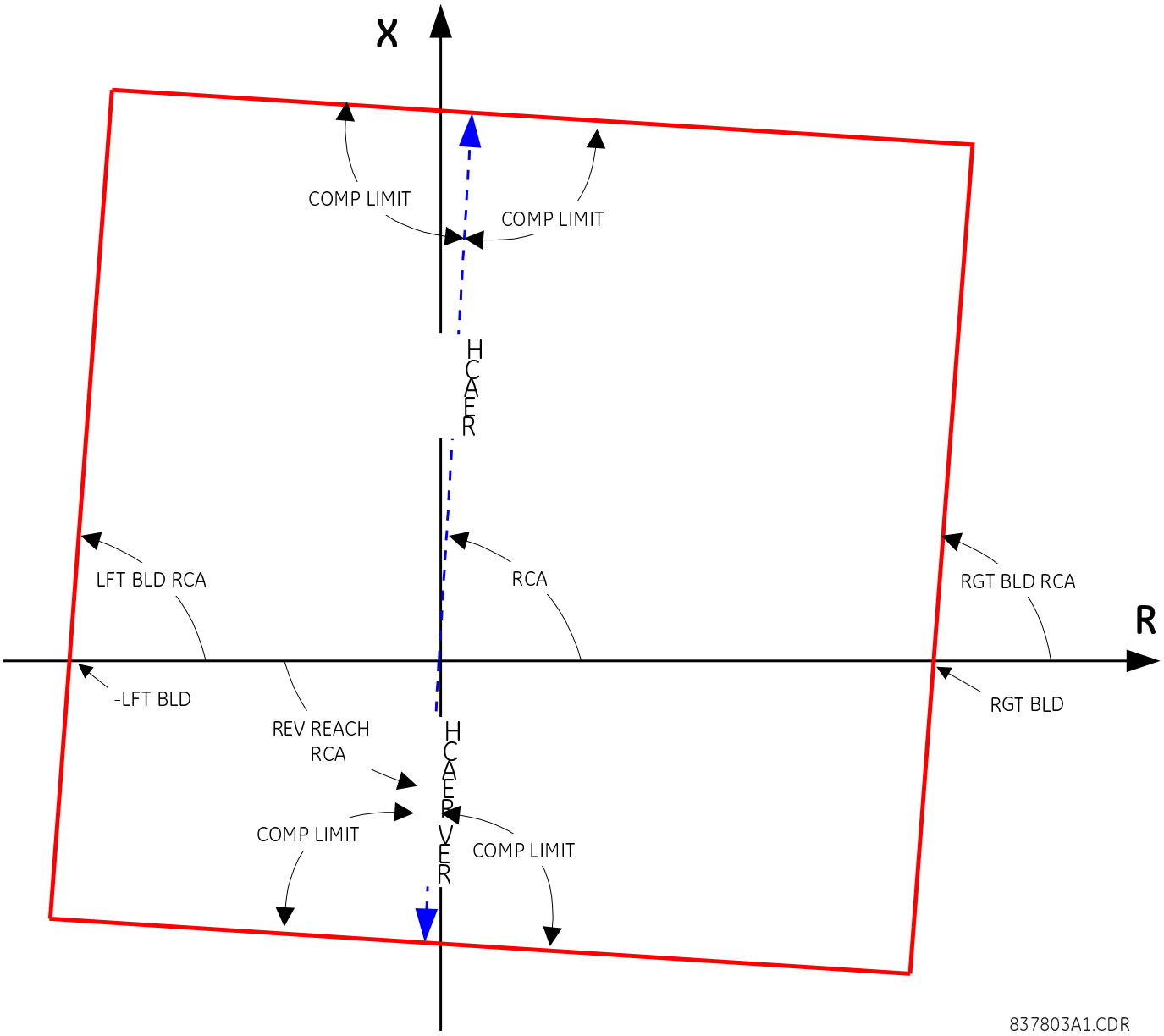

Figure 266: Non-directional quadrilateral phase distance characteristic

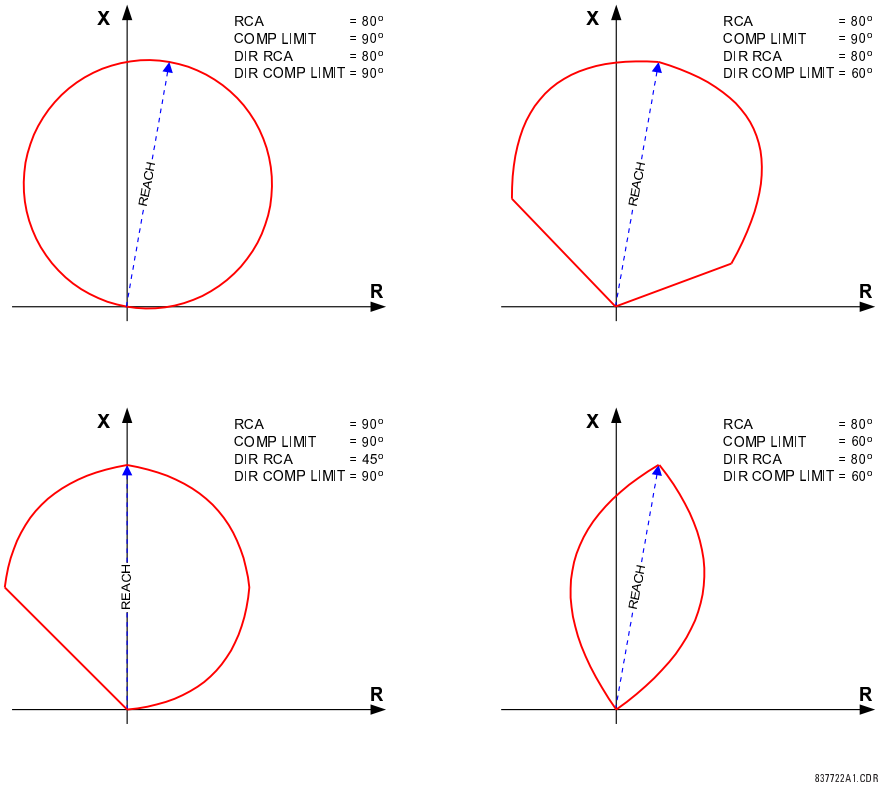

Figure 267: Mho distance characteristic sample shapes

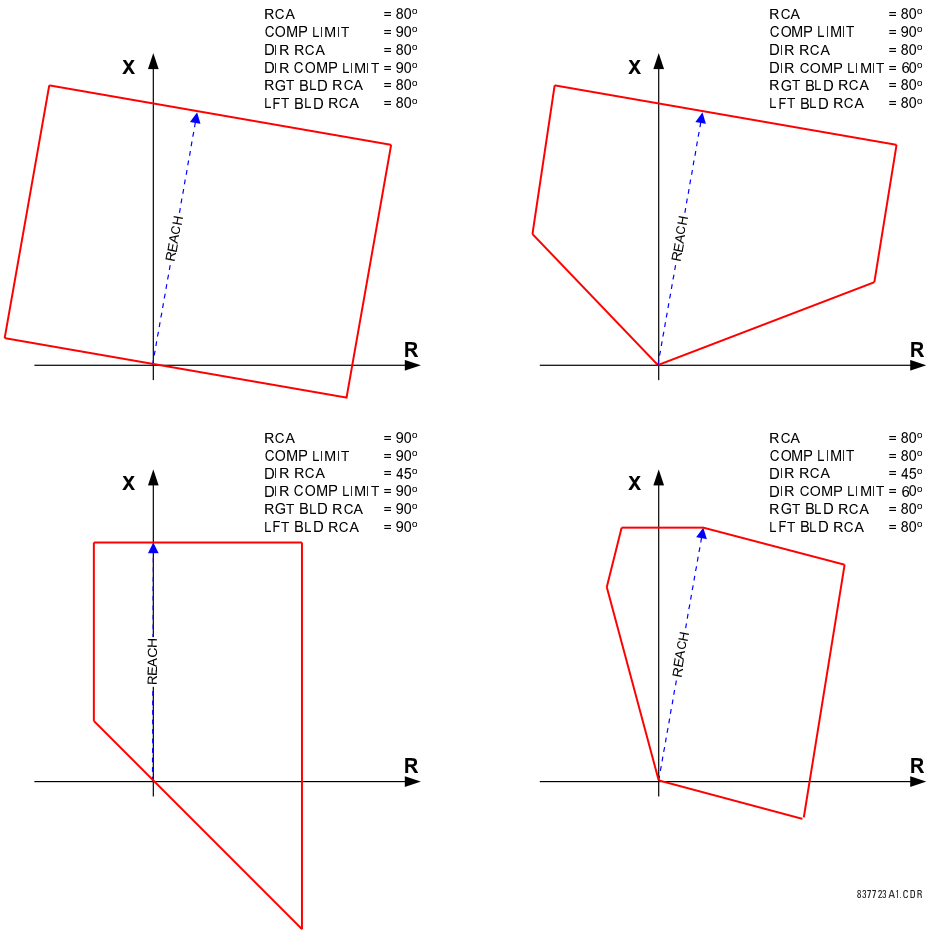

Figure 268: Quadrilateral distance characteristic sample shapes

PHS DIST Z1 XFMR VOL CONNECTION

The phase distance elements can be applied to look through a three-phase delta-wye or wye-delta power transformer. In addition, VTs and CTs can be located independently from one another at different windings of the transformer. If the potential source is located at the correct side of the transformer, set this setting to `None`.

This setting specifies the location of the voltage source with respect to the involved power transformer in the direction of the zone. The following figure illustrates the usage of this setting. In section (a), zone 1 is looking through a transformer from the delta into the wye winding. Therefore, the ***Z1*** setting is set to `Dy11`. In section (b), Zone 3(4) is looking through a transformer from the wye into the delta winding. Therefore, the ***Z3(Z4)*** setting is set to `Yd1`. The zone is restricted by the potential point (location of the VTs) as illustrated in (e).

PHS DIST Z1 XFMR CUR CONNECTION

This setting specifies the location of the current source with respect to the involved power transformer in the direction of the zone. In section (a) of the following figure, zone 1 is looking through a transformer from the delta into the wye winding. Therefore, the ***Z1*** setting is set to `Dy11`. In section (b), the CTs are located at the same side as the read point. Therefore, the ***Z3(Z4)*** setting is set to `None`.

See the Application of Settings chapter for information on calculating distance reach settings in applications involving power transformers.

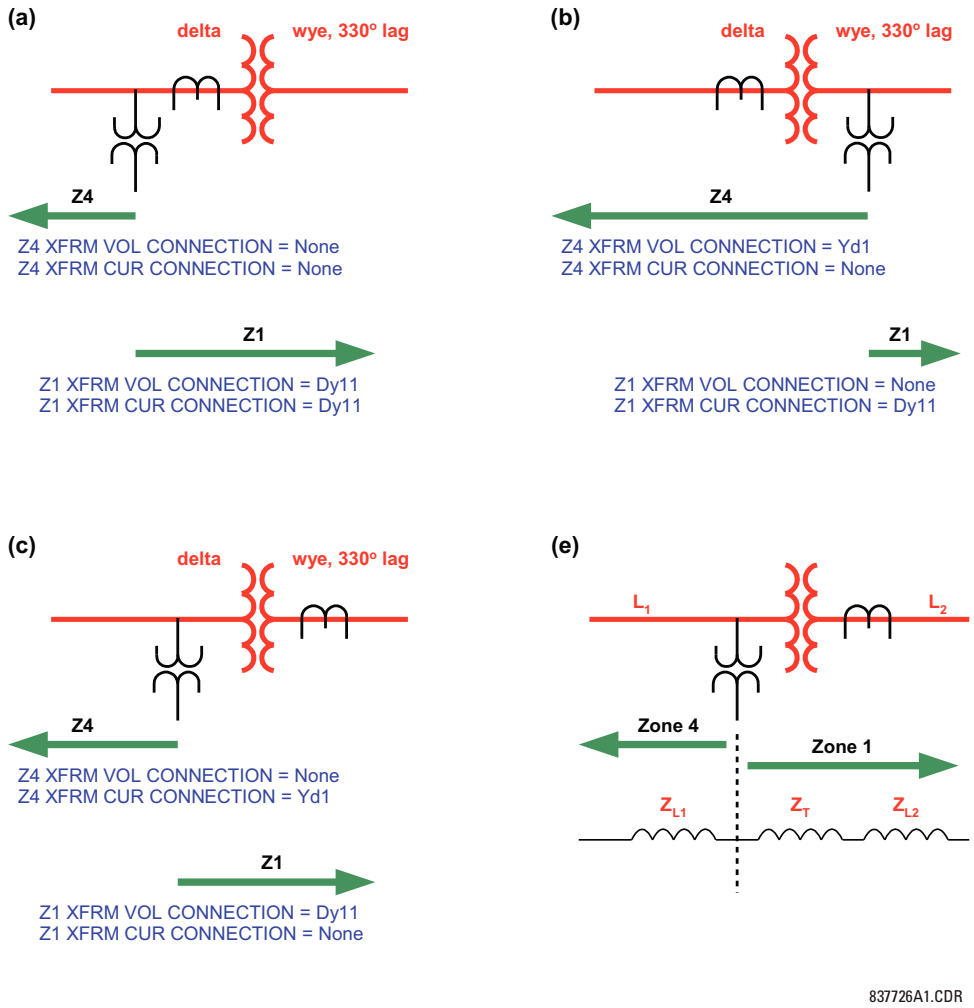

Figure 269: Application of the PH DIST XFMR VOL/CUR CONNECTION settings

PHS DIST Z1 REACH

This setting defines the zone reach for the forward and reverse applications. In the non-directional applications, this setting defines the forward reach of the zone. The reverse reach impedance in non-directional applications is set independently. The reach impedance is entered in secondary ohms. The reach impedance angle is entered as the ***PHS DIST Z1 RCA*** setting.

Zone 1 is characterized by transient overreach of less than 5% under source impedance ratios of up to 30. When setting an under-reaching zone 1 for direct tripping and under-reaching pilot schemes (DUTT, PUTT) also consider other factors as per rules of distance relaying. In non-directional applications, this 5% transient accuracy applies to the forward reach only.

To achieve specified operating speed of distance elements, the relay internally calculates source to line impedance ratio (SIR) from fault phasors. In these calculations, line impedance is estimated based on the zone 1 reach setting. Therefore, in order to calculate the SIR value properly and to maintain the optimal operating speed of the distance elements, set zone 1 reach with a regular 80 to 85% of the line impedance reach setting, even when zone 1 is disabled.

PHS DIST Z1 RCA

This setting specifies the characteristic angle (similar to the "maximum torque angle" in previous technologies) of the phase distance characteristic for the forward and reverse applications. In the non-directional applications, this

setting defines the angle of the forward reach impedance. The reverse reach impedance in the non-directional applications is set independently. The setting is an angle of reach impedance as shown in the distance characteristic figures earlier. This setting is independent from ***PHS DIST Z1 DIR RCA***, the characteristic angle of an extra directional supervising function.

PHS DIST Z1 REV REACH

This setting defines the reverse reach of the non-directional zone (***PHS DIST Z1 DIR*** setting). The value must be entered in secondary ohms. This setting does not apply when the zone direction is set to `Forward` or `Reverse`.

PHS DIST Z1 REV REACH RCA

This setting defines the angle of the reverse reach impedance of the non-directional zone (***PHS DIST Z1 DIR*** setting). This setting does not apply when the zone direction is set to `Forward` or `Reverse`.

PHS DIST Z1 COMP LIMIT

This setting specifies the shape the operating characteristic. In particular, it produces the lens-type characteristic of the mho function and a tent-shaped characteristic of the reactance boundary of the quadrilateral function. If the mho shape is selected, the same limit angle applies to both the mho and supervising reactance comparators. In conjunction with the mho shape selection, the setting improves loadability of the protected line. In conjunction with the quadrilateral characteristic, this setting improves security for faults close to the reach point by adjusting the reactance boundary into a tent-shape.

PHS DIST Z1 DIR RCA

This setting selects the characteristic angle (or maximum torque angle) of the directional supervising function. If the mho shape is applied, the directional function is an extra supervising function as the dynamic mho characteristic is itself directional. In conjunction with the quadrilateral shape, this setting defines the only directional function built into the phase distance element. The directional function uses the memory voltage for polarization. This setting typically equals the distance characteristic angle ***PHS DIST Z1 RCA***.

PHS DIST Z1 DIR COMP LIMIT

Selects the comparator limit angle for the directional supervising function.

PHS DIST Z1 QUAD RGT BLD

This setting defines the right blinder position of the quadrilateral characteristic along the resistive axis of the impedance plane (see the Quadrilateral Phase Distance Characteristic figures). The angular position of the blinder is adjustable with the use of the ***PHS DIST Z1 QUAD RGT BLD RCA*** setting. This setting applies only to the quadrilateral characteristic and is set giving consideration to the maximum load current and required resistive coverage.

PHS DIST Z1 QUAD RGT BLD RCA

This setting defines the angular position of the right blinder of the quadrilateral characteristic (see the Quadrilateral Distance Characteristic figures).

PHS DIST Z1 QUAD LFT BLD

This setting defines the left blinder position of the quadrilateral characteristic along the resistive axis of the impedance plane (see the Quadrilateral Distance Characteristic figures). The angular position of the blinder is adjustable with the use of the ***PHS DIST Z1 QUAD LFT BLD RCA*** setting. This setting applies only to the quadrilateral characteristic and is set with consideration to the maximum load current.

PHS DIST Z1 QUAD LFT BLD RCA

This setting defines the angular position of the left blinder of the quadrilateral characteristic (see the Quadrilateral Distance Characteristic figures).

PHS DIST Z1 SUPV

The phase distance elements are supervised by the magnitude of the line-to-line current (fault loop current used for the distance calculations). For convenience, √3 is accommodated by the pickup (that is, before being used, the entered value of the threshold setting is multiplied by √3).

If the minimum fault current level is sufficient, set the current supervision pickup above maximum full load current preventing maloperation under VT fuse fail conditions. This requirement can be difficult to meet for remote faults at the end of zones 2 and above. If this is the case, set the current supervision pickup below the full load current, but this can result in maloperation during fuse fail conditions.

For the D30 and G60, Zone 1 is sealed-in with the current supervision.

PHS DIST Z1 VOLT LEVEL

This setting is relevant for applications on series-compensated lines, or in general, if series capacitors are located between the relaying point and a point where the zone does not overreach. For plain (non-compensated) lines, set to zero. Otherwise, the setting is entered in per unit of the phase VT bank configured under the DISTANCE SOURCE. Effectively, this setting facilitates dynamic current-based reach reduction. In non-directional applications (***PHS DIST Z1 DIR*** set to `Non-directional`), this setting applies only to the forward reach of the non-directional zone. See the Application of Settings chapter for information on calculating this setting for series compensated lines.

PHS DIST Z1 DELAY

This setting allows the user to delay operation of the distance elements and implement stepped distance protection. The distance element timers for zones 2 and higher apply a short dropout delay to cope with faults located close to the zone boundary when small oscillations in the voltages or currents can inadvertently reset the timer. Zone 1 does not need any drop-out delay since it is sealed-in by the presence of current.

PHS DIST Z1 BLK

This setting enables the user to select a FlexLogic operand to block a given distance element. VT fuse fail detection is one of the applications for this setting.

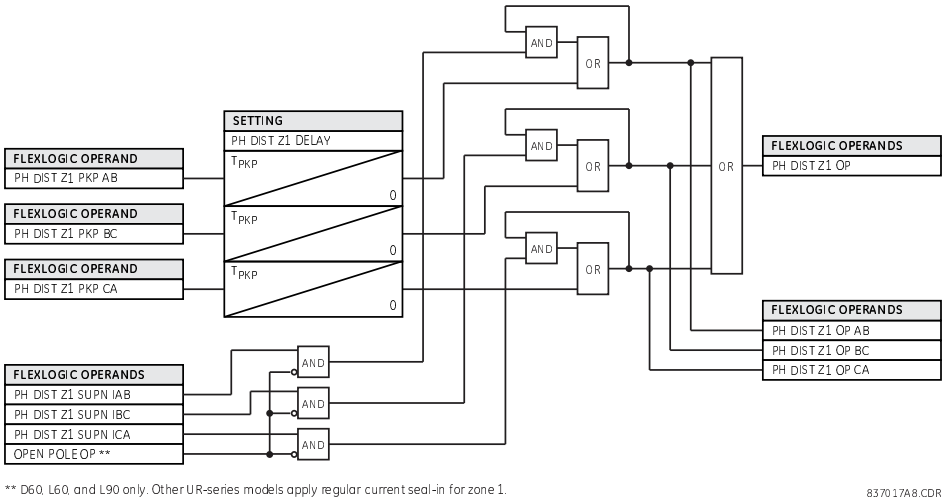

Figure 270: Phase distance zone 1 operate logic

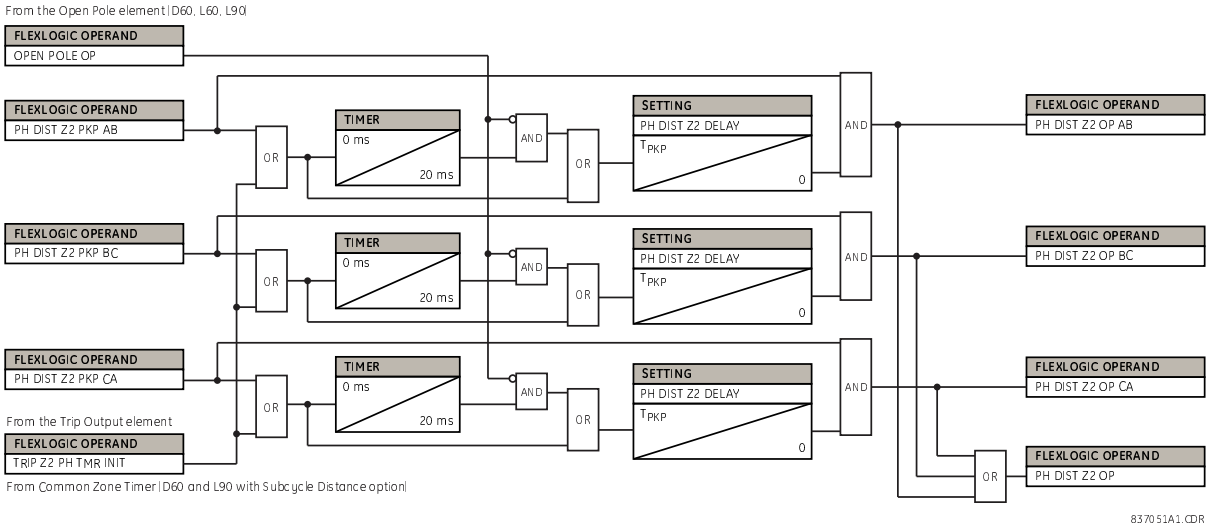

Figure 271: Phase distance zone 2 operate logic

For phase distance zone, there is a provision to start the zone timer with other distance zones or loop pickup flags (except zone 1) to avoid prolonging phase distance zone operation when the fault evolves from one type to another or migrates from a higher zone to a lower zone.

The previous figure applies to zone 2 and higher for relays with a Distance Adaptation Package software option. Otherwise, the zone timer with other distance zones or loops pickup flags are limited to zone 2 only.

Without a Distance Adaptation Package option, in the Trip Output function, assign required zones to accomplish this functionality.

With a Distance Adaptation Package option, in the Common Zone Timer, assign required zones to accomplish this functionality.

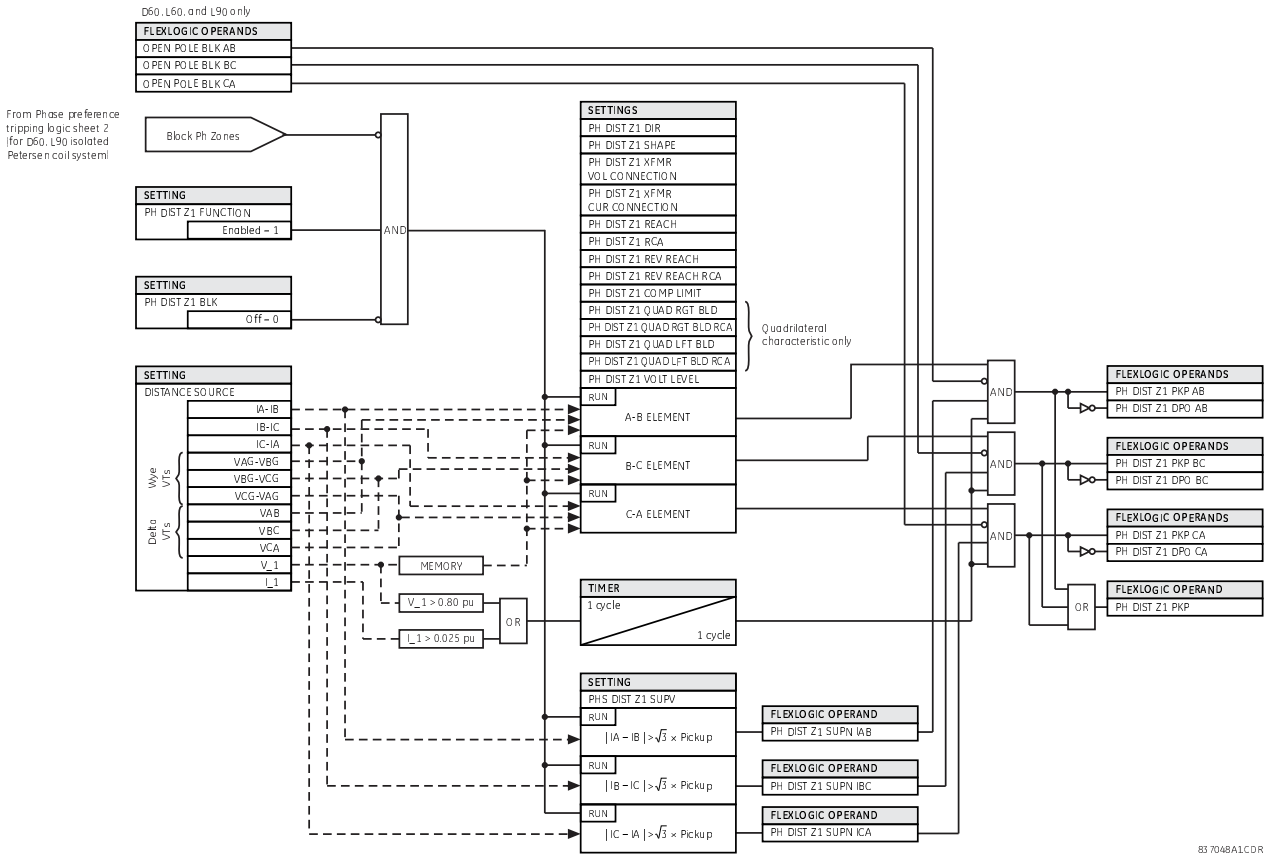

Figure 272: Phase Distance Logic

9.7.3.3 GROUND DISTANCE

SETTINGS > GROUPED ELEMENTS > SETTING GROUP 1(6) > DISTANCE > PHASE DISTANCE Z<n>

> *Note:*
> *Only Phase Ground Z1 is shown*

■ GROUND DISTANCE Z1 ■	⇔	GND DIST Z1 FUNCTION: Disabled	Range: Disabled, Enabled
	⇕	GND DIST Z1 DIR: Forward	Range: Forward, Reverse, Non-directional
	⇕	GND DIST Z1 SHAPE: Mho	Range: Mho, Quad
	⇕	GND DIST Z1 Z0/Z1 MAG: 2.70	Range: 0.00 to 10.00 in steps of 0.01
	⇕	GND DIST Z1 Z0/Z1 ANG: 0°	Range: –90 to 90° in steps of 1
	⇕	GND DIST Z1 Z0M/Z1 MAG: 0.00	Range: 0.00 to 7.00 in steps of 0.01
	⇕	GND DIST Z1 Z0M/Z1 ANG: 0°	Range: –90 to 90° in steps of 1

⇕	GND DIST Z1 REACH: 2.00 Ω	Range: 0.02 to 500.00 ohms in steps of 0.01
⇕	GND DIST Z1 RCA: 85°	Range: 30 to 90° in steps of 1
⇕	GND DIST Z1 REV REACH: 2.00 Ω	Range: 0.02 to 500.00 ohms in steps of 0.01
⇕	GND DIST Z1 REV REACH RCA: 85°	Range: 30 to 90° in steps of 1
⇕	GND DIST Z1 POL CURRENT: Zero-seq	Range: Zero-seq, Neg-seq
⇕	GND DIST Z1 NONHOMOGEN ANG: 0.0°	Range: –40.0 to 40.0° in steps of 0.1
⇕	GND DIST Z1 COMP LIMIT: 90°	Range: 30 to 90° in steps of 1
⇕	GND DIST Z1 DIR RCA: 85°	Range: 30 to 90° in steps of 1
⇕	GND DIST Z1 DIR COMP LIMIT: 90°	Range: 30 to 90° in steps of 1
⇕	GND DIST Z1 QUAD RGT BLD: 10.00 Ω	Range: 0.02 to 500.00 ohms in steps of 0.01
⇕	GND DIST Z1 QUAD RGT BLD RCA: 85°	Range: 60 to 90° in steps of 1
⇕	GND DIST Z1 QUAD LFT BLD: 10.00 Ω	Range: 0.02 to 500.00 ohms in steps of 0.01
⇕	GND DIST Z1 QUAD LFT BLD RCA: 85°	Range: 60 to 90° in steps of 1
⇕	GND DIST Z1 SUPV: 0.200 pu	Range: 0.100 to 30.000 pu in steps of 0.001
⇕	GND DIST Z1 VOLT LEVEL: 0.000 pu	Range: 0.000 to 5.000 pu in steps of 0.001
⇕	GND DIST Z1 DELAY: 0.000 s	Range: 0.000 to 65.535 s in steps of 0.001
⇕	GND DIST Z1 BLK: Off	Range: FlexLogic operand
⇕	GND DIST Z1 TARGET: Self-reset	Range: Self-reset, Latched, Disabled
⇧	GND DIST Z1 EVENTS: Disabled	Range: Disabled, Enabled

Note:
Zone 6 requires a Distance Adaptation Package software option..

The ground mho distance function uses a dynamic 100% memory-polarized mho characteristic with additional reactance, directional, current, and phase selection supervising characteristics. The ground quadrilateral distance function is composed of a reactance characteristic, right and left blinders, and 100% memory-polarized directional, overcurrent, and phase selection supervising characteristics.

When set to non-directional, the mho function becomes an offset mho with the reverse reach controlled independently from the forward reach, and all the directional characteristics removed. When set to non-directional, the quadrilateral function applies a reactance line in the reverse direction instead of the directional comparators.

The reactance supervision for the mho function uses the zero-sequence current for polarization. The reactance line of the quadrilateral function uses either zero-sequence or negative-sequence current as a polarizing quantity. The selection is controlled by a user setting and depends on the degree of non-homogeneity of the zero-sequence and negative-sequence equivalent networks.

The directional supervision uses memory voltage as polarizing quantity and both zero- and negative-sequence currents as operating quantities.

The phase selection supervision restrains the ground elements during double-line-to-ground faults as they, by the principles of distance relaying, can be inaccurate in such conditions. Ground distance zones apply additional zero-sequence directional supervision.

Each ground distance zone is configured individually through its own setting menu. All of the settings can be modified independently for each of the zones except:

- The ***SIGNAL SOURCE*** setting (common for both phase and ground elements for all zones as entered under the ***SETTINGS > GROUPED ELEMENTS > SETTING GROUP 1(6) > DISTANCE*** menu)
- The ***MEMORY DURATION*** setting (common for both phase and ground elements for all zones as entered under the ***SETTINGS > GROUPED ELEMENTS > SETTING GROUP 1(6) > DISTANCE*** menu)

The common distance settings noted at the start of this section must be properly chosen for correct operation of the ground distance elements.

Although all ground distance zones can be used as either instantaneous elements (pickup [PKP] and dropout [DPO] FlexLogic signals) or time-delayed elements (operate [OP] FlexLogic signals), only zone 1 is intended for the instantaneous under-reaching tripping mode.

Note:
*Ensure that the PHASE VT SECONDARY VOLTAGE (see the S**ETTINGS > SYSTEM SETUP > AC INPUTS > VOLTAGE BANK** menu) is set correctly to prevent improper operation of associated memory action.*

GND DIST Z1 DIR

All ground distance zones are reversible. The forward direction is defined by the ***GND DIST Z1 RCA*** setting and the reverse direction is shifted by 180° from that angle. The non-directional zone spans between the forward reach impedance defined by the ***GND DIST Z1 REACH*** and ***GND DIST Z1 RCA*** settings, and the reverse reach impedance defined by the ***GND DIST Z1 REV REACH*** and ***GND DIST Z1 REV REACH RCA*** settings.

GND DIST Z1 SHAPE

This setting selects the shape of the ground distance characteristic between the mho and quadrilateral characteristics. The selection is available on a per-zone basis.

The figures show the directional and non-directional quadrilateral ground distance characteristics. The directional and non-directional mho ground distance characteristics are the same as those shown for the phase distance element in the previous section.

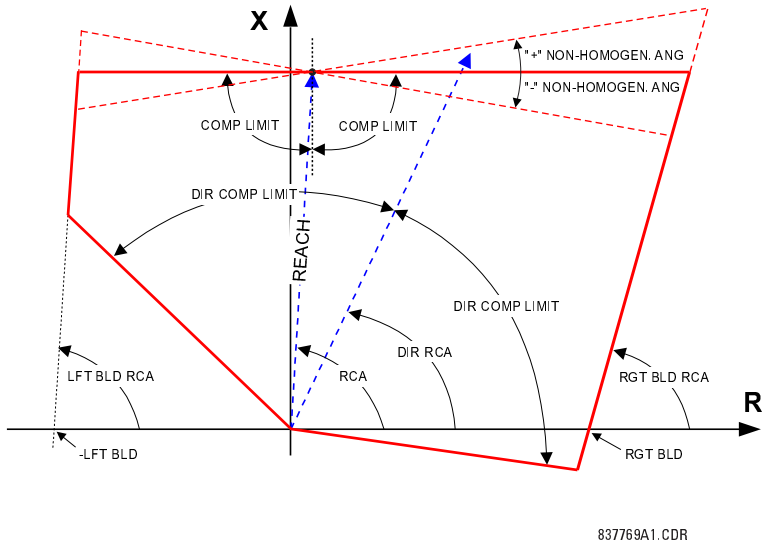

Figure 273: Directional quadrilateral ground distance characteristic

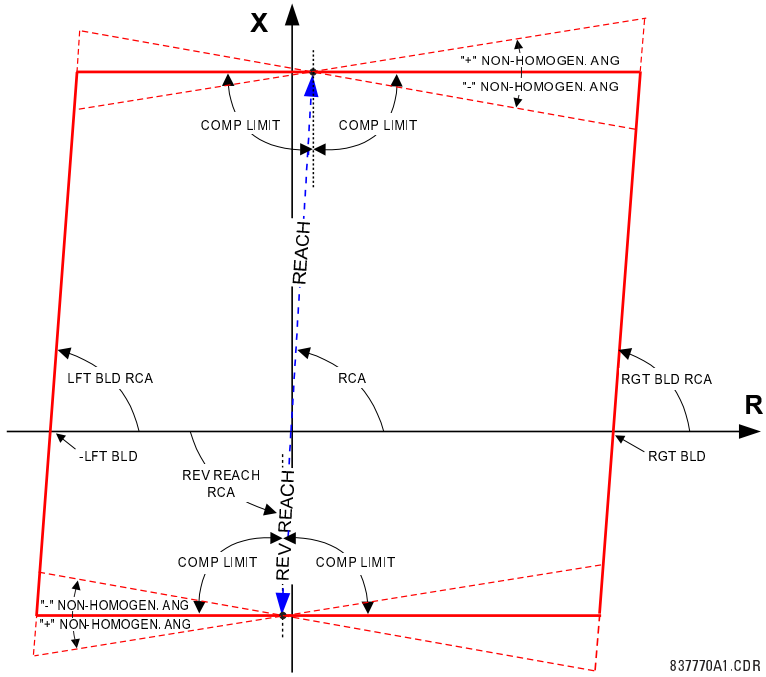

Figure 274: Non-directional quadrilateral ground distance characteristic

GND DIST Z1 Z0/Z1 MAG

This setting specifies the ratio between the zero-sequence and positive-sequence impedance required for zero-sequence compensation of the ground distance elements. This setting is available on a per-zone basis, enabling precise settings for tapped, non-homogeneous, and series compensated lines.

GND DIST Z1 Z0/Z1 ANG

This setting specifies the angle difference between the zero-sequence and positive-sequence impedance required for zero-sequence compensation of the ground distance elements. The entered value is the zero-sequence impedance angle minus the positive-sequence impedance angle. This setting is available on a per-zone basis, enabling precise values for tapped, non-homologous, and series compensated lines.

GND DIST Z1 Z0M/Z1 MAG

The ground distance elements can be programmed to apply compensation for the zero-sequence mutual coupling between parallel lines. If this compensation is required, the ground current from the parallel line (3I_0) measured in the direction of the zone being compensated must be connected to the ground input CT of the CT bank configured under the ***DISTANCE SOURCE***. This setting specifies the ratio between the magnitudes of the mutual zero-sequence impedance between the lines and the positive-sequence impedance of the protected line. Set this setting to zero if the compensation is not to be performed. Note that internally the mutual coupling compensation is applied only if 3I_0>1.22*IG to ensure that no mutual coupling compensation is applied when the fault is on the parallel line. Mutual coupling compensation is applied when distance source is assigned with 8F or 8L type DSP module only and when the ratio of the protected line ground current to parallel line ground current is greater than 1.22.

GND DIST Z1 Z0M/Z1 ANG

This setting specifies the angle difference between the mutual zero-sequence impedance between the lines and the positive-sequence impedance of the protected line.

GND DIST Z1 REACH

This setting defines the reach of the zone for the forward and reverse applications. In non-directional applications, this setting defines the forward reach of the zone. The reverse reach impedance in non-directional applications is set independently. The angle of the reach impedance is entered as the ***GND DIST Z1 RCA*** setting. The reach impedance is entered in secondary ohms.

To achieve specified operating speed of distance elements, the relay internally calculates source to line impedance ratio (SIR) from fault phasors. In these calculations, line impedance is estimated based on the zone 1 reach setting. Therefore, in order to calculate the SIR value properly and to maintain the optimal operating speed of the distance elements, set zone 1 reach with a regular 80 to 85% of the line impedance reach setting, even when zone 1 is disabled.

GND DIST Z1 RCA

This setting specifies the characteristic angle (similar to the maximum torque angle in previous technologies) of the ground distance characteristic for the forward and reverse applications. In the non-directional applications, this setting defines the forward reach of the zone. The reverse reach impedance in the non-directional applications is set independently. This setting is independent from the GND DIST Z1 DIR RCA setting (the characteristic angle of an extra directional supervising function).

> *Note:*
> *The relay internally performs zero-sequence compensation for the protected circuit based on the values entered for **GND DIST Z1 Z0/Z1 MAG** and **GND DIST Z1 Z0/Z1 ANG,** and if configured to do so, zero-sequence compensation for mutual coupling based on the values entered for **GND DIST Z1 Z0M/Z1 MAG** and **GND DIST Z1 Z0M/Z1 ANG**. As such, enter the **GND DIST Z1 REACH** and **GND DIST Z1 RCA** values in terms of positive sequence quantities.*

GND DIST Z1 REV REACH

This setting defines the reverse reach of the zone set to non-directional (***GND DIST Z1 DIR*** setting). The value must be entered in secondary ohms. This setting does not apply when the zone direction is set to `Forward` or `Reverse`.

GND DIST Z1 REV REACH RCA

This setting defines the angle of the reverse reach impedance if the zone is set to non-directional (***GND DIST Z1 DIR*** setting). This setting does not apply when the zone direction is set to `Forward` or `Reverse`.

GND DIST Z1 POL CURRENT

This setting applies only if the ***GND DIST Z1 SHAPE*** is set to `Quad` and controls the polarizing current used by the reactance comparator of the quadrilateral characteristic. Either the zero-sequence or negative-sequence current can be used. In general, a variety of system conditions must be examined to select an optimum polarizing current.

This setting becomes less relevant when the resistive coverage and zone reach are set conservatively. Also, this setting is more relevant in lower voltage applications such as on distribution lines or cables, as compared with high-voltage transmission lines. This setting applies to both the zone 1 and reverse reactance lines if the zone is set to non-directional. See the Application of Settings chapter for additional information.

If the relay is applied on a Solidly Grounded system (***SETTINGS > CONTROL ELEMENTS > TRIP OUTPUT > CROSS COUNTRY > CROSS COUNTRY*** = `Disabled` or `Solid Grounding`), the relay selects the best polarization based on the ***GND DIST Z1 POL CURRENT*** setting and prevailing system conditions. This is achieved with the following checks on zero sequence and negative sequence current against phase current (Iph) in each loop:

$$|\angle I0 - \angle Iph| < 50° \text{ AND } I0>0.1 \text{ pu}$$

$$|\angle I2 - \angle Iph| < 50° \text{ AND } I2>0.1 \text{ pu}$$

For zone 1, when both checks fail, meaning both negative and zero sequence currents are not reliable for the polarizing reactance line, distance protection automatically switches from Quadrilateral to MHO characteristics to provide reliable operation.

If the relay is applied on an Isolated/Compensated grounded systems (***SETTINGS > CONTROL ELEMENTS > TRIP OUTPUT > CROSS COUNTRY > CROSS COUNTRY*** = Is/Comp Grounding), the relay internally uses loop current for polarization to handle cross country faults. As the use of loop current for polarization results in fixed tilt, the validity of this polarization is controlled by the following condition:

$$|\angle I2 - \angle Iph|<45°$$

If this condition is not fulfilled, the assumption that the angle of fault current at fault point is close to the angle of phase current (Iph) cannot be considered valid. Under such conditions, the quadrilateral characteristic can significantly overreach and underreach. To avoid this, the distance protection automatically switches from Quadrilateral to MHO characteristics to provide reliable operation.

GND DIST Z1 NON-HOMOGEN ANG

This setting applies only if the GND DIST Z1 SHAPE is set to “Quad” and provides a method to correct the angle of the polarizing current of the reactance comparator for non-homogeneity of the zero-sequence or negative-sequence networks. In general, a variety of system conditions must be examined to select this setting. In many applications this angle is used to reduce the reach at high resistances in order to avoid overreaching under far-out reach settings and/or when the sequence networks are greatly non-homogeneous. This setting applies to both the forward and reverse reactance lines if the zone is set to non-directional. See the Application of Settings chapter for additional information.

GND DIST Z1 COMP LIMIT

This setting shapes the operating characteristic. In particular, it enables a lens-shaped characteristic of the mho function and a tent-shaped characteristic of the quadrilateral function reactance boundary. If the mho shape is selected, the same limit angle applies to mho and supervising reactance comparators. In conjunction with the mho shape selection, this setting improves loadability of the protected line. In conjunction with the quadrilateral characteristic, this setting improves security for faults close to the reach point by adjusting the reactance boundary into a tent-shape.

GND DIST Z1 DIR RCA

Selects the characteristic angle (or maximum torque angle) of the directional supervising function. If the mho shape is applied, the directional function is an extra supervising function, as the dynamic mho characteristic itself is a directional one. In conjunction with the quadrilateral shape selection, this setting defines the only directional function built into the ground distance element. The directional function uses memory voltage for polarization.

GND DIST Z1 DIR COMP LIMIT

This setting selects the comparator limit angle for the directional supervising function.

GND DIST Z1 QUAD RGT BLD

This setting defines the right blinder position of the quadrilateral characteristic along the resistive axis of the impedance plane (see the Quadrilateral Distance Characteristic figure). The angular position of the blinder is adjustable with the use of the ***GND DIST Z1 QUAD RGT BLD RCA*** setting. This setting applies only to the quadrilateral characteristic; set it with consideration to the maximum load current and required resistive coverage.

GND DIST Z1 QUAD RGT BLD RCA

This setting defines the angular position of the right blinder of the quadrilateral characteristic (see the Quadrilateral Distance Characteristic figure).

GND DIST Z1 QUAD LFT BLD

This setting defines the left blinder position of the quadrilateral characteristic along the resistive axis of the impedance plane (see the Quadrilateral Distance Characteristic figure). The angular position of the blinder is adjustable with the use of the ***GND DIST Z1 QUAD LFT BLD RCA*** setting. This setting applies only to the quadrilateral characteristic; set it with consideration to the maximum load current.

GND DIST Z1 QUAD LFT BLD RCA

This setting defines the angular position of the left blinder of the quadrilateral characteristic (see the Quadrilateral Distance Characteristic figure).

GND DIST Z1 SUPV

The ground distance elements are supervised by the magnitude of the neutral (3I_0) current, where both 3I_0 current and own loop current have to be above this setting level. Set the current supervision pickup to be less than the minimum 3I_0 current for the end of the zone fault, taking into account the required fault resistance coverage to prevent maloperation due to VT fuse failure. Settings less than 0.2 pu are not recommended, so apply them with caution. To enhance ground distance security against spurious neutral current during switch-off transients, three-phase faults, and phase-to-phase faults, a positive-sequence current restraint of 5% is applied to the neutral current supervision magnitude.

Zone 1 is sealed in with the current supervision.

GND DIST Z1 VOLT LEVEL

This setting is relevant for applications on series-compensated lines, or in general, if series capacitors are located between the relaying point and a point for which the zone shall not overreach. For plain (non-compensated) lines, set it to zero. Otherwise, the setting is entered in per unit of the VT bank configured under the DISTANCE SOURCE. Effectively, this setting facilitates dynamic current-based reach reduction. In non-directional applications (GND DIST Z1 DIR set to “Non-directional”), this setting applies only to the forward reach of the non-directional zone. See the Application of Settings chapter for details and information on calculating this setting value for applications on series compensated lines.

GND DIST Z1 DELAY

This setting enables the user to delay operation of the distance elements and implement a stepped distance backup protection. The distance element timer applies a short drop-out delay to cope with faults located close to the boundary of the zone when small oscillations in the voltages or currents can inadvertently reset the timer.

GND DIST Z1 BLK

This setting enables the user to select a FlexLogic operand to block the given ground distance element. VT fuse fail detection is one of the applications for this setting.

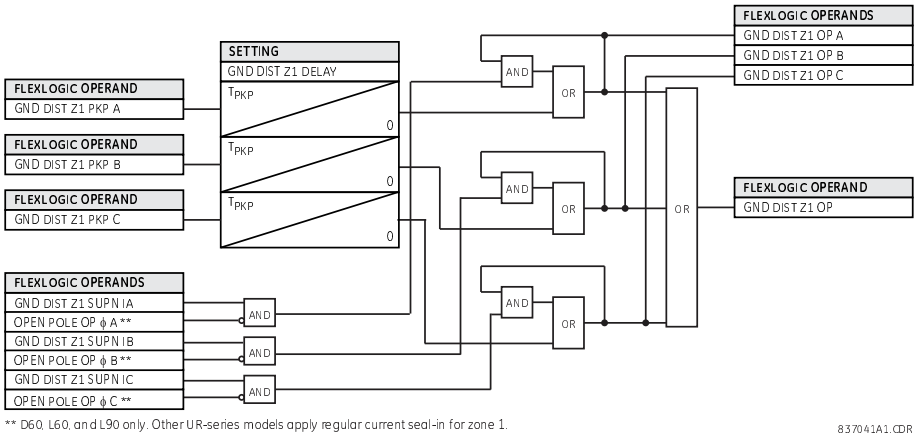

Figure 275: Ground distance zone 1 OP scheme

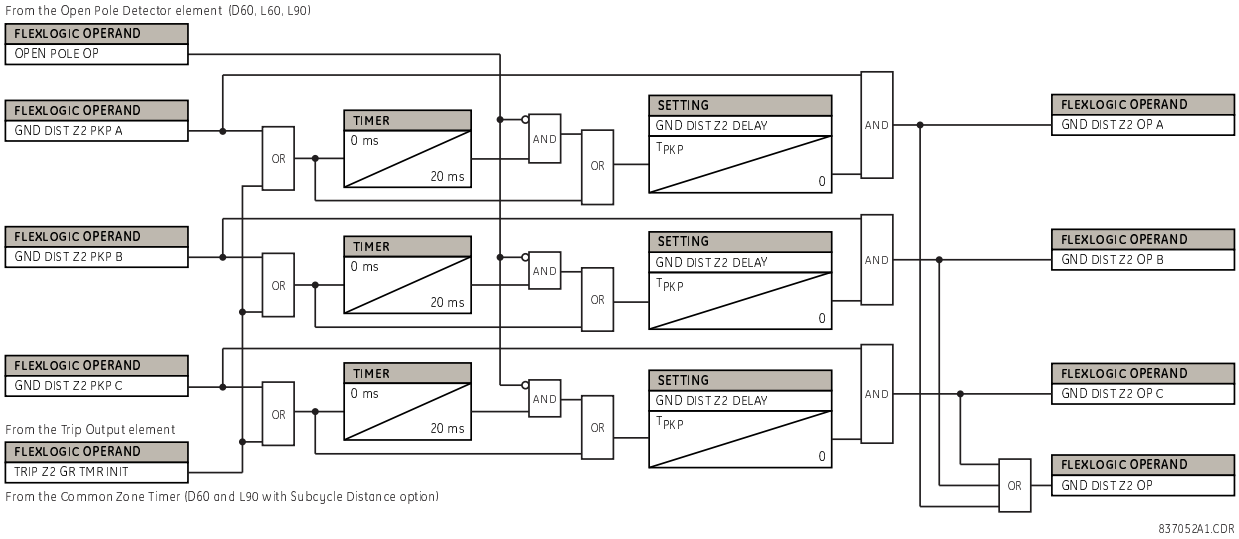

Figure 276: Ground distance zone 2 OP scheme

> *Note:*
> *For ground distance zone, there is a provision to start the zone timer with the other distance zones or loop pickup flags (except zone 1) to avoid prolonging ground distance zone operation when the fault evolves from one type to another or migrates from a higher zone.*

The previous figure applies to zone 2 and higher zones for relays with a Distance Adaptation Package software option. Otherwise, the zone timer with other distance zones or loops pickup flags are limited to zone 2 only.

Without a Distance Adaptation Package option, in the Trip Output function, assign required zones to accomplish this functionality.

With a Distance Adaptation Package option, in the Common Zone Timer, assign required zones to accomplish this functionality.

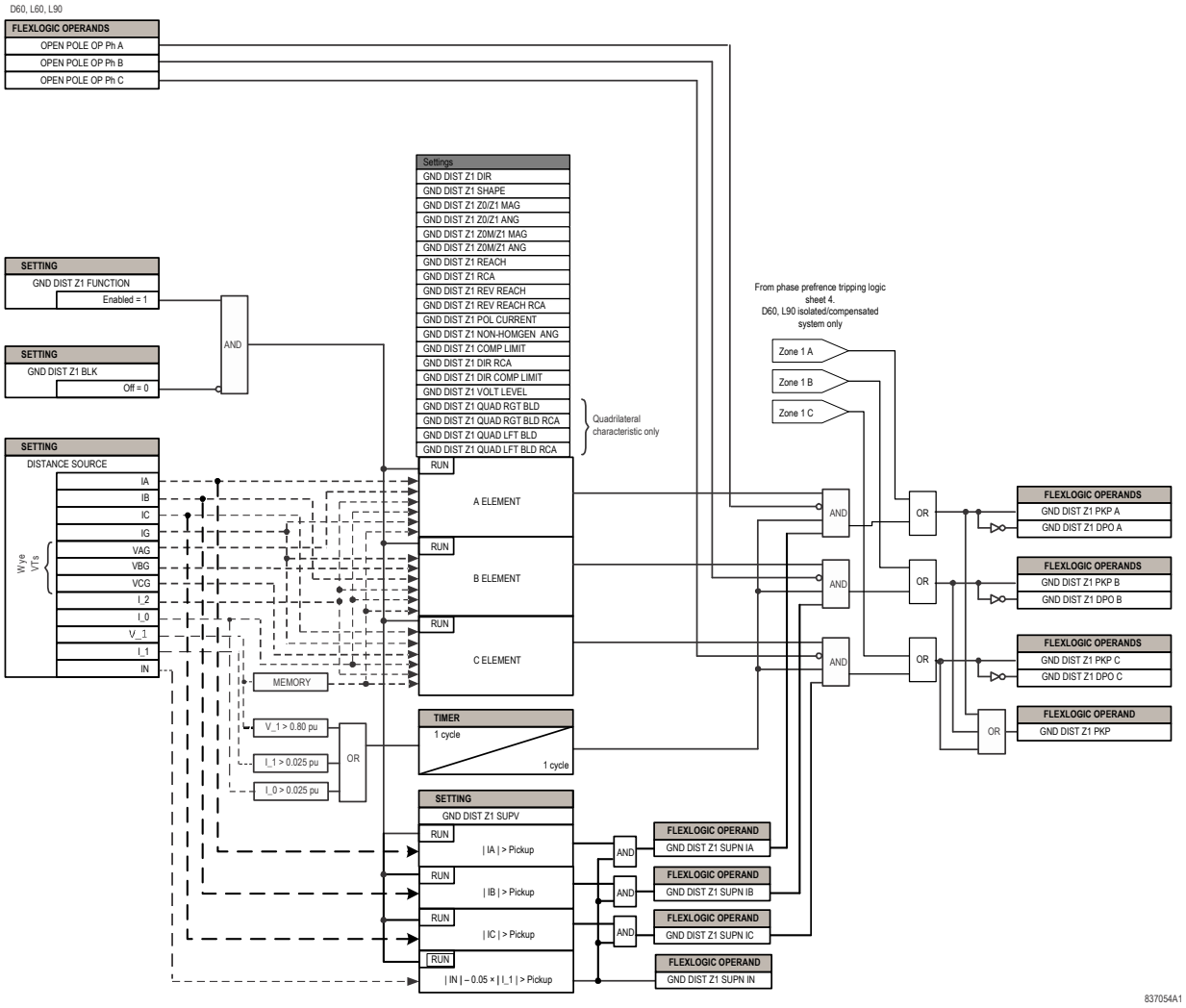

Figure 277: Ground distance zone 1 pickup logic

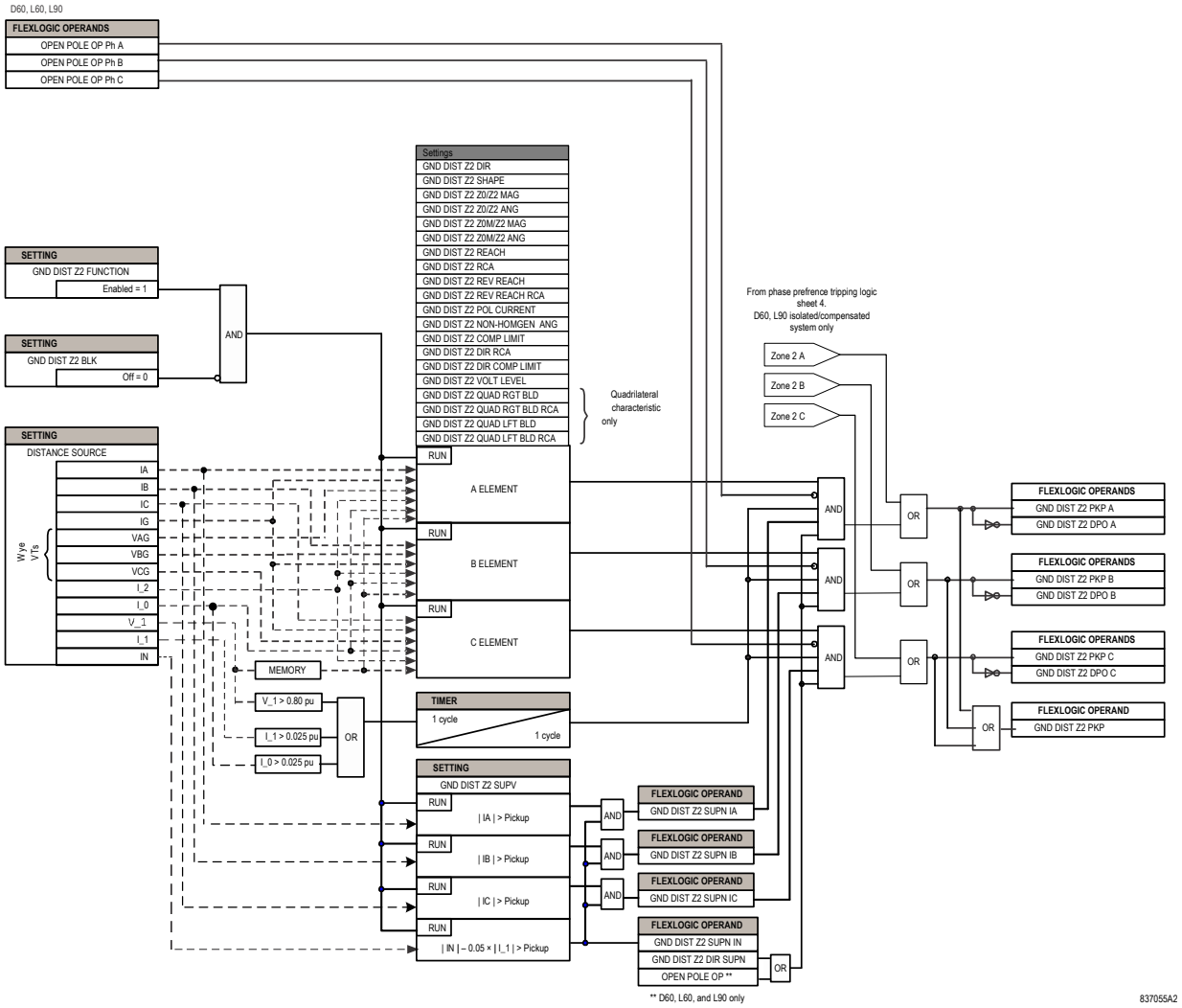

Figure 278: Ground distance zones 2 and higher pickup logic

9.7.3.4 GROUND DIRECTIONAL SUPERVISION

A dual (zero-sequence and negative-sequence) memory-polarized directional supervision applied to the ground distance protection elements has been shown to give good directional integrity. However, a reverse double-line-to-ground fault can lead to bad operation of the ground element in a sound phase if the zone reach setting is increased to cover high resistance faults.

Ground distance zones 2 and higher use an additional ground directional supervision to enhance directional integrity. The element's directional characteristic angle is used as a maximum torque angle together with a 90° limit angle.

The supervision is biased toward operation in order to avoid compromising the sensitivity of ground distance elements at low signal levels. Otherwise, the reverse fault condition that generates concern has high polarizing levels so that a correct reverse fault decision can be reliably made.

The supervision for zones 2 and 5 is removed during open pole conditions.

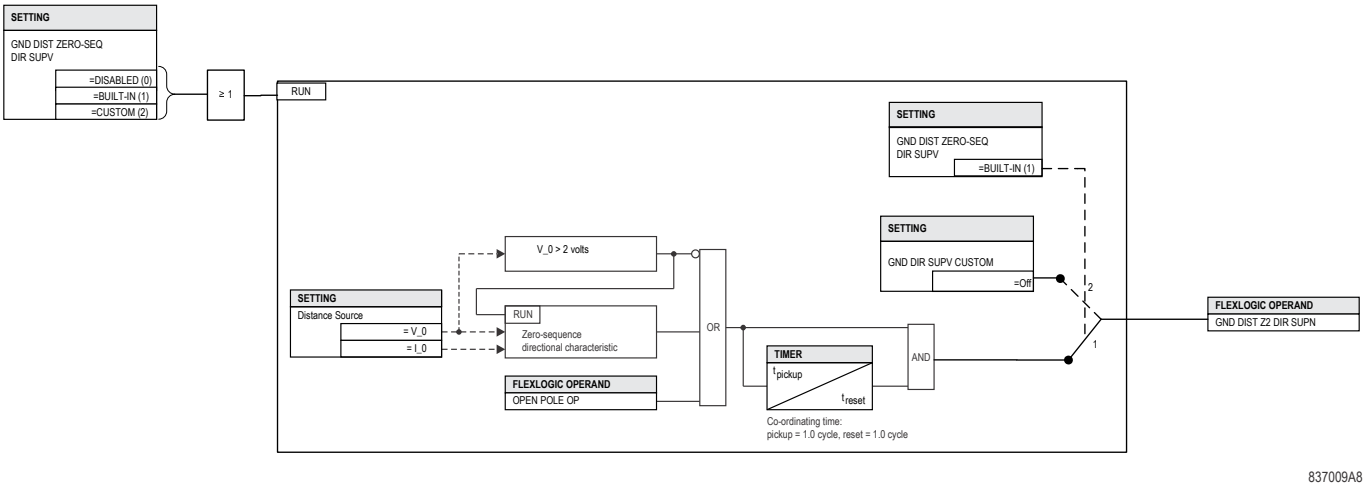

Figure 279: Ground directional supervision logic

9.7.4 POWER SWING DETECT (ANSI 68)

SETTINGS > GROUPED ELEMENTS > SETTING GROUP 1(6) > POWER SWING DETECT

■ POWER SWING ■ DETECT	⇔	POWER SWING FUNCTION: Disabled	Range: Disabled, Enabled
	⇕	POWER SWING SOURCE: SRC 1	Range: SRC <n>
	⇕	POWER SWING SHAPE: Mho Shape	Range: Mho Shape, Quad Shape
	⇕	POWER SWING MODE: Two Step	Range: Two Step, Three Step
	⇕	POWER SWING SUPV: 0.600 pu	Range: 0.050 to 30.000 pu in steps of 0.001
	⇕	POWER SW I2 SUPV ENAB: Off	Range: FlexLogic operand
	⇕	POWER SW I2 SUPV ENAB: Off	Range: FlexLogic operand
	⇕	POWER SWING I2 SUPV: 0.200 pu	Range: 0.050 to 30.000 pu in steps of 0.001
	⇕	POWER SWING FWD REACH: 50.00 Ω	Range: 0.10 to 500.00 ohms in steps of 0.01
	⇕	POWER SWING QUAD FWD REACH MID: 60.00 Ω	Range: 0.10 to 500.00 ohms in steps of 0.01
	⇕	POWER SWING QUAD FWD REACH OUT: 70.00 Ω	Range: 0.10 to 500.00 ohms in steps of 0.01
	⇕	POWER SWING FWD RCA: 75°	Range: 40 to 90° in steps of 1
	⇕	POWER SWING REV REACH: 50.00 Ω	Range: 0.10 to 500.00 ohms in steps of 0.01
	⇕	POWER SWING QUAD REV REACH MID: 60.00 Ω	Range: 0.10 to 500.00 ohms in steps of 0.01

⇕	POWER SWING QUAD REV REACH OUT: 70.00 Ω	Range: 0.10 to 500.00 ohms in steps of 0.01
⇕	POWER SWING REV RCA: 75°	Range: 40 to 90° in steps of 1
⇕	POWER SWING OUTER LIMIT ANGLE: 120°	Range: 40 to 90° in steps of 1
⇕	POWER SWING MIDDLE LIMIT ANGLE: 90°	Range: 40 to 90° in steps of 1
⇕	POWER SWING INNER LIMIT ANGLE: 60°	Range: 40 to 90° in steps of 1
⇕	POWER SWING OUTER RGT BLD: 100.00 Ω	Range: 0.10 to 500.00 ohms in steps of 0.01
⇕	POWER SWING OUTER LFT BLD: 100.00 Ω	Range: 0.10 to 500.00 ohms in steps of 0.01
⇕	POWER SWING MIDDLE RGT BLD: 100.00 Ω	Range: 0.10 to 500.00 ohms in steps of 0.01
⇕	POWER SWING MIDDLE LFT BLD: 100.00 Ω	Range: 0.10 to 500.00 ohms in steps of 0.01
⇕	POWER SWING INNER RGT BLD: 100.00 Ω	Range: 0.10 to 500.00 ohms in steps of 0.01
⇕	POWER SWING INNER LFT BLD: 100.00 Ω	Range: 0.10 to 500.00 ohms in steps of 0.01
⇕	POWER SWING PICKUP DELAY 1: 0.030 s	Range: 0.000 to 65.535 s in steps of 0.001
⇕	POWER SWING RESET DELAY 1: 0.050 s	Range: 0.000 to 65.535 s in steps of 0.001
⇕	POWER SWING PICKUP DELAY 2: 0.017 s	Range: 0.000 to 65.535 s in steps of 0.001
⇕	POWER SWING PICKUP DELAY 3: 0.009 s	Range: 0.000 to 65.535 s in steps of 0.001
⇕	POWER SWING PICKUP DELAY 4: 0.017 s	Range: 0.000 to 65.535 s in steps of 0.001
⇕	POWER SWING SEAL-IN DELAY: 0.400 s	Range: 0.000 to 65.535 s in steps of 0.001
⇕	POWER SWING TRIP MODE: Delayed	Range: Early, Delayed
⇕	POWER SWING TARGET: Self-reset	Range: Self-reset, Latched, Disabled
⇧	POWER SWING EVENTS: Disabled	Range: Disabled, Enabled

The power swing detect element provides both power swing blocking and out-of-step tripping functions. The element measures the positive-sequence apparent impedance and traces its locus with respect to either two or three user-selectable operating characteristic boundaries. Upon detecting appropriate timing relations, the blocking and/or tripping indications are given through FlexLogic operands. The element incorporates an adaptive disturbance detector. This function does not trigger on power swings, but is capable of detecting faster disturbances—faults in particular—that can occur during power swings. Operation of this dedicated disturbance detector is signaled via the POWER SWING 50DD operand.

The power swing detect element asserts two operands intended for blocking selected protection elements on power swings: POWER SWING BLOCK is a traditional signal that is safely asserted for the entire duration of the power swing, and POWER SWING UN/BLOCK is established in the same way, but resets when an extra disturbance is detected during the power swing. The POWER SWING UN/BLOCK operand can be used for blocking selected protection elements if the intent is to respond to faults during power swing conditions.

Different protection elements respond differently to power swings. If tripping is required for faults during power swing conditions, some elements can be blocked permanently (using the POWER SWING BLOCK operand), and others can be blocked and dynamically unblocked upon fault detection (using the POWER SWING UN/BLOCK operand).

View the operating characteristic and logic figures along with the following discussion to understand the operation of the element.

The power swing detect element operates in three-step or two-step mode, as follows:

- **Three-step operation** — The power swing blocking sequence essentially times the passage of the locus of the positive-sequence impedance between the outer and the middle characteristic boundaries. If the locus enters the outer characteristic (indicated by the POWER SWING OUTER FlexLogic operand) but stays outside the middle characteristic (indicated by the POWER SWING MIDDLE FlexLogic operand) for an interval longer than ***POWER SWING PICKUP DELAY 1***, the power swing blocking signal (POWER SWING BLOCK FlexLogic operand) is established and sealed-in. The blocking signal resets when the locus leaves the outer characteristic, but not sooner than the ***POWER SWING RESET DELAY 1*** time.
- **Two-step operation** — If the two-step mode is selected, the sequence is identical to the three-step operation, but it is the outer and inner characteristics that are used to time the power swing locus.

The out-of-step tripping feature operates as follows for three-step and two-step power swing detection modes:

- **Three-step operation** — The out-of-step trip sequence identifies unstable power swings by determining if the impedance locus spends a finite time between the outer and middle characteristics and then a finite time between the middle and inner characteristics. The first step is similar to the power swing blocking sequence. After timer POWER SWING PICKUP DELAY 1 times out, latch 1 is set as long as the impedance stays within the outer characteristic.
  If afterwards, at any time (given the impedance stays within the outer characteristic), the locus enters the middle characteristic but stays outside the inner characteristic for a period of time defined as ***POWER SWING PICKUP DELAY 2***, latch 2 is set as long as the impedance stays inside the outer characteristic. If afterwards, at any time (given the impedance stays within the outer characteristic), the locus enters the inner characteristic and stays there for a period of time defined as ***POWER SWING PICKUP DELAY 3***, latch 2 is set as long as the impedance stays inside the outer characteristic; the element is now ready to trip.
  If the `Early` trip mode is selected, the POWER SWING TRIP operand is set immediately and sealed-in for the interval set by the ***POWER SWING SEAL-IN DELAY***. If the `Delayed` trip mode is selected, the element waits until the impedance locus leaves the inner characteristic, then times out for the ***POWER SWING PICKUP DELAY 2*** and sets latch 4; the element is now ready to trip. The trip operand is set later, when the impedance locus leaves the outer characteristic.
- Two-step operation — Similar to the three-step mode with two exceptions. First, the initial stage monitors the time spent by the impedance locus between the outer and inner characteristics. Second, the stage involving the ***POWER SWING PICKUP DELAY 2*** timer is bypassed. It is up to the user to integrate the blocking (POWER SWING BLOCK) and tripping (POWER SWING TRIP) FlexLogic operands with other protection functions and output contacts in order to make this element fully operational.

The element can be set to use either lens (mho) or rectangular (quadrilateral) characteristics, as shown in the figure. When set to `Mho`, the element applies the right and left blinders as well. If the blinders are not required, set their settings high enough to effectively disable the blinders.

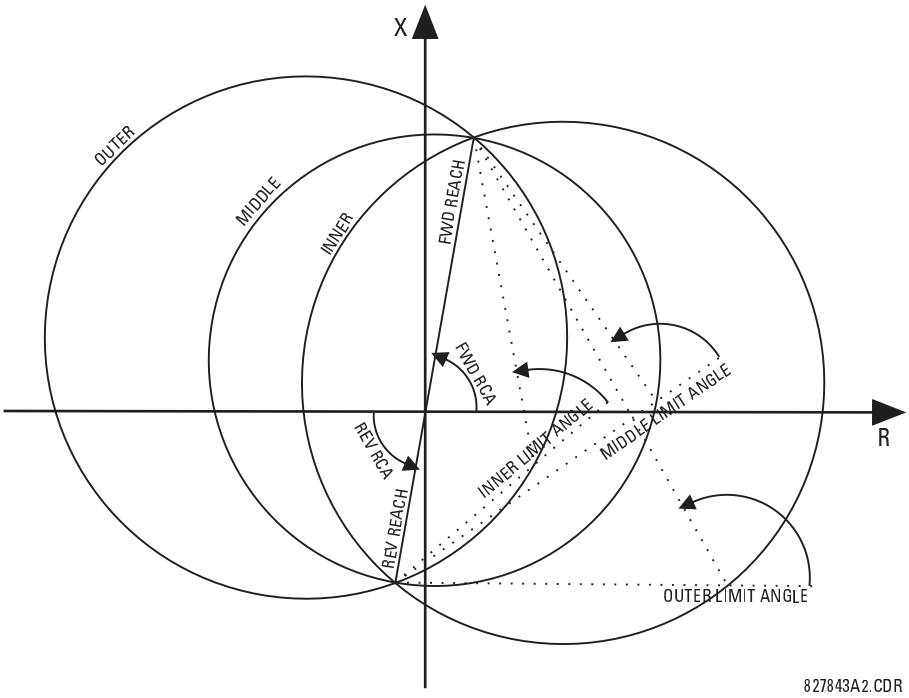

Figure 280: Power swing detect mho operating characteristics

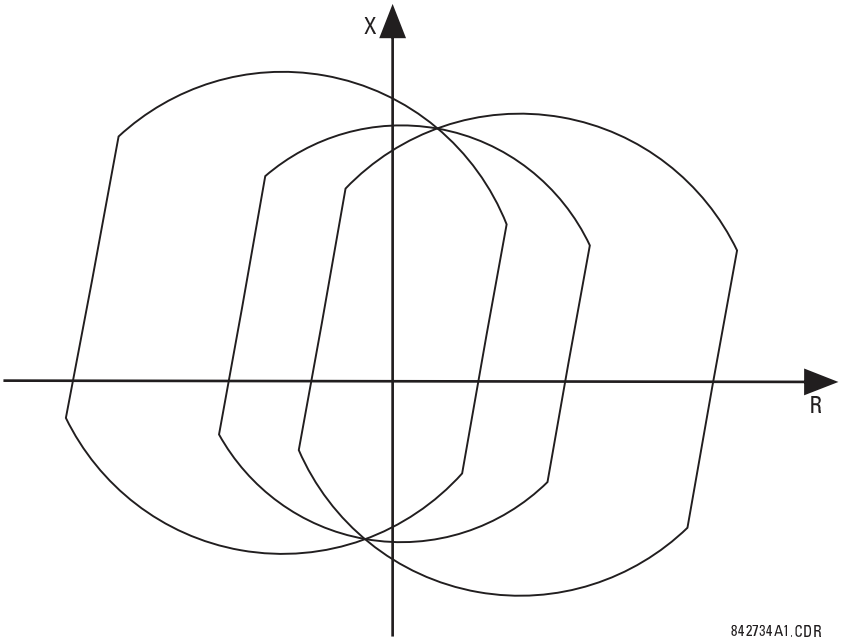

Figure 281: Effects of blinders on the mho characteristics

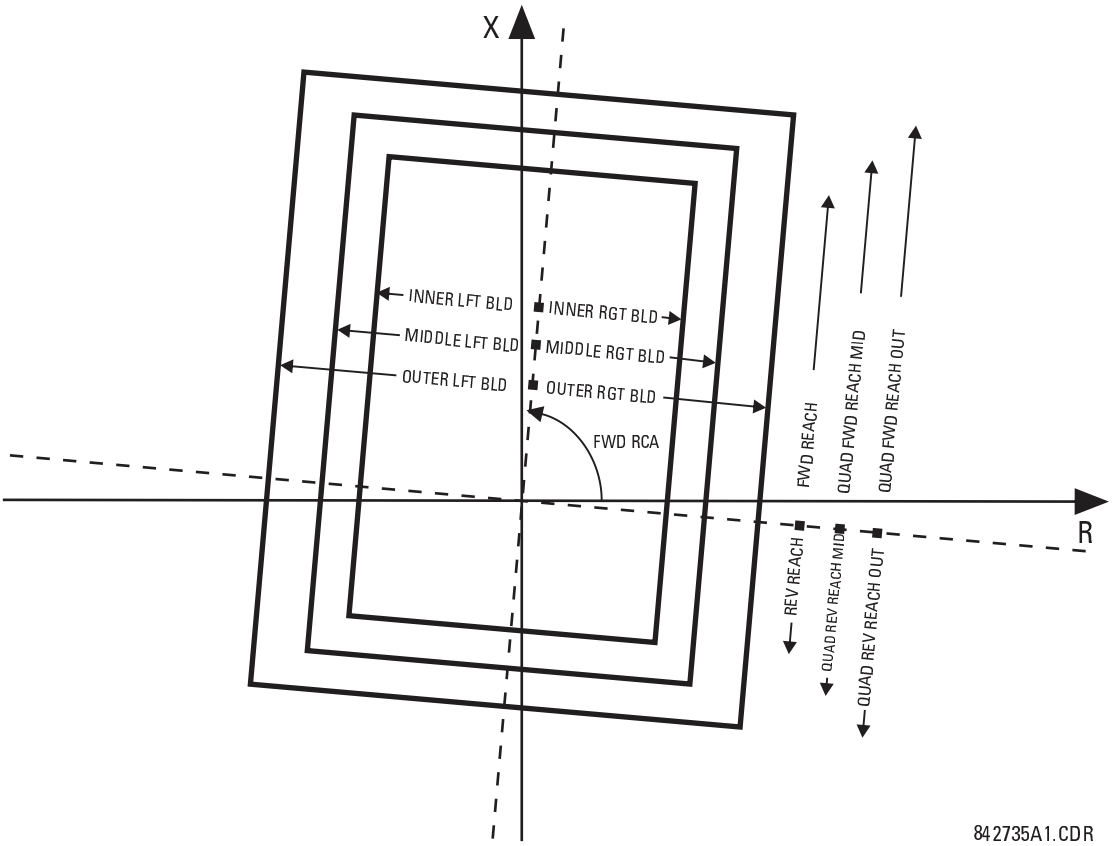

Figure 282: Power swing detect quadrilateral operating characteristics

The FlexLogic output operands for the power swing detect element are as follows:

POWER SWING OUTER, POWER SWING MIDDLE, POWER SWING INNER, POWER SWING TMR2 PKP, POWER SWING TMR3 PKP, and POWER SWING TMR4 PKP are auxiliary operands that facilitate testing and special applications

POWER SWING BLOCK blocks selected protection elements, such as distance functions

POWER SWING UN/BLOCK blocks those protection elements that are intended to be blocked under power swings, but subsequently unblocked when a fault occurs after the power swing blocking condition has been established

POWER SWING 50DD indicates that an adaptive disturbance detector integrated with the element has picked up. This operand triggers on faults occurring during power swing conditions. This includes both three-phase and single-pole-open conditions.

POWER SWING INCOMING indicates an unstable power swing with an incoming locus (the locus enters the inner characteristic)

POWER SWING OUTGOING indicates an unstable power swing with an outgoing locus (the locus leaving the outer characteristic). This operand can be used to count unstable swings and take certain action only after a pre-defined number of unstable power swings.

POWER SWING TRIP is a trip command

The settings for the power swing detect element are as follows.

POWER SWING FUNCTION

This setting enables and disables the power swing detection element. The setting applies to both power swing blocking and out-of-step tripping functions.

POWER SWING SOURCE

The source setting identifies the signal source for both blocking and tripping functions.

POWER SWING SHAPE

This setting selects the shapes (either *Mho* or *Quad*) of the outer, middle, and inner characteristics of the power swing detect element. The operating principle is not affected. The Mho characteristics use the left and right blinders.

POWER SWING MODE

This setting selects between the two-step and three-step operating modes and applies it to both power swing blocking and out-of-step tripping functions. The three-step mode applies if there is enough space between the maximum load impedances and distance characteristics of the relay that all three (outer, middle, and inner) characteristics can be placed between the load and the distance characteristics. Whether the spans between the outer and middle as well as the middle and inner characteristics are sufficient is determined by analysis of the fastest power swings expected in correlation with settings of the power swing timers.

The two-step mode uses only the outer and inner characteristics for both blocking and tripping functions. This leaves more space in heavily loaded systems to place two power swing characteristics between the distance characteristics and the maximum load, but allows for only one determination of the impedance trajectory.

POWER SWING SUPV

A common overcurrent pickup level supervises all three power swing characteristics. The supervision responds to the positive-sequence current.

POWER SW I2 SUPV ENAB

This setting is to enable I2 supervision logic through a FlexLogic operand, which is used to detect the presence of significant unbalance in current signals, such as during fault conditions. Under these conditions, the POWER SWING BLOCK operand is not asserted.

POWER SWING I2 SUPV

This setting specifies the threshold of the I2 supervision logic.

POWER SWING FWD REACH

This setting specifies the forward reach of all three mho characteristics and the inner quadrilateral characteristic. For a simple system consisting of a line and two equivalent sources, this reach needs to be higher than the sum of the line and remote source positive-sequence impedances. Detailed transient stability studies can be needed for complex systems in order to determine this setting. The angle of this reach impedance is specified by the ***POWER SWING FWD RCA*** setting.

POWER SWING QUAD FWD REACH MID

This setting specifies the forward reach of the middle quadrilateral characteristic. The angle of this reach impedance is specified by the ***POWER SWING FWD RCA*** setting. The setting is not used if the shape setting is *Mho*.

POWER SWING QUAD FWD REACH OUT

This setting specifies the forward reach of the outer quadrilateral characteristic. The angle of this reach impedance is specified by the ***POWER SWING FWD RCA*** setting. The setting is not used if the shape setting is *Mho*.

POWER SWING FWD RCA

This setting specifies the angle of the forward reach impedance for the mho characteristics, angles of all blinders, and both forward and reverse reach impedances of the quadrilateral characteristics.

POWER SWING REV REACH

This setting specifies the reverse reach of all three mho characteristics and the inner quadrilateral characteristic. For a simple system of a line and two equivalent sources, this reach needs to be higher than the positive-sequence impedance of the local source. Detailed transient stability studies can be needed for complex systems to determine this setting. The angle of this reach impedance is specified by the ***POWER SWING REV RCA*** setting for `Mho`, and the ***POWER SWING FWD RCA*** setting for inner `Quad`.

POWER SWING QUAD REV REACH MID

This setting specifies the reverse reach of the middle quadrilateral characteristic. The angle of this reach impedance is specified by the ***POWER SWING FWD RCA*** setting. The setting is not used if the shape setting is `Mho`.

POWER SWING QUAD REV REACH OUT

This setting specifies the reverse reach of the outer quadrilateral characteristic. The angle of this reach impedance is specified by the ***POWER SWING FWD RCA*** setting. The setting is not used if the shape setting is `Mho`.

POWER SWING REV RCA

This setting specifies the angle of the reverse reach impedance for the mho characteristics. This setting applies to mho shapes only.

POWER SWING OUTER LIMIT ANGLE

This setting defines the outer power swing characteristic. The convention depicted in the power swing detect mho operating characteristic diagram are to be observed: values greater than 90° result in an apple-shaped characteristic; values less than 90° result in a lens-shaped characteristic. This angle must be selected in consideration of the maximum expected load. If the maximum load angle is known, coordinate the outer limit angle with a 20° security margin. Detailed studies can be needed for complex systems to determine this setting. This setting applies to mho shapes only.

POWER SWING MIDDLE LIMIT ANGLE

This setting defines the middle power swing detect characteristic. It is relevant only for the three-step mode. A typical value is close to the average of the outer and inner limit angles. This setting applies to mho shapes only.

POWER SWING INNER LIMIT ANGLE

This setting defines the inner power swing detect characteristic. The inner characteristic is used by the out-of-step tripping function: beyond the inner characteristic out-of-step trip action is definite (the actual trip can be delayed as per the ***TRIP MODE*** setting). Therefore, this angle must be selected in consideration to the power swing angle beyond which the system becomes unstable and cannot recover.

The inner characteristic is also used by the power swing blocking function in the two-step mode. In this case, set this angle large enough so that the characteristics of the distance elements are safely enclosed by the inner characteristic. This setting applies to Mho shapes only.

POWER SWING OUTER, MIDDLE, and INNER RGT BLD

These settings specify the resistive reach of the right blinder. The blinder applies to both Mho and Quad characteristics. Set these value high if no blinder is required for the Mho characteristic.

POWER SWING OUTER, MIDDLE, and INNER LFT BLD

These settings specify the resistive reach of the left blinder. Enter a positive value; the relay automatically uses a negative value. The blinder applies to both Mho and Quad characteristics. Set this value high if no blinder is required for the Mho characteristic.

POWER SWING PICKUP DELAY 1

All the coordinating timers are related to each other and need to be set to detect the fastest expected power swing and produce out-of-step tripping in a secure manner. Set the timers in relation to the power swing detect characteristics, mode of power swing detect operation, and mode of out-of-step tripping. This timer defines the interval that the impedance locus must spend between the outer and inner characteristics (two-step operating mode), or between the outer and middle characteristics (three-step operating mode) before the power swing blocking signal is established. This time delay must be set shorter than the time required for the impedance locus to travel between the two selected characteristics during the fastest expected power swing. This setting is relevant for both power swing blocking and out-of-step tripping.

POWER SWING RESET DELAY 1

This setting defines the dropout delay for the power swing blocking signal. Detection of a condition requiring a block output sets latch 1 after ***PICKUP DELAY 1*** time. When the impedance locus leaves the outer characteristic, timer ***POWER SWING RESET DELAY 1*** is started. When the timer times-out, the latch is reset. Select this setting to give extra security for the power swing blocking action.

POWER SWING PICKUP DELAY 2

Controls the out-of-step tripping function in the three-step mode only. This timer defines the interval the impedance locus must spend between the middle and inner characteristics before the second step of the out-of-step tripping sequence is completed. This time delay must be set shorter than the time required for the impedance locus to travel between the two characteristics during the fastest expected power swing.

POWER SWING PICKUP DELAY 3

Controls the out-of-step tripping function only. It defines the interval the impedance locus must spend within the inner characteristic before the last step of the out-of-step tripping sequence is completed and the element is armed to trip. The actual moment of tripping is controlled by the ***TRIP MODE*** setting. This time delay is provided for extra security before the out-of-step trip action is executed.

POWER SWING PICKUP DELAY 4

Controls the out-of-step tripping function in Delayed trip mode only. This timer defines the interval the impedance locus must spend outside the inner characteristic but within the outer characteristic before the element is armed for the delayed trip. The delayed trip occurs when the impedance leaves the outer characteristic. This time delay is provided for extra security. Set it considering the fastest expected power swing.

POWER SWING SEAL-IN DELAY

The out-of-step trip FlexLogic operand (POWER SWING TRIP) is sealed-in for the specified period of time. The sealing-in is crucial in the delayed trip mode, as the original trip signal is a very short pulse occurring when the impedance locus leaves the outer characteristic after the out-of-step sequence is completed.

POWER SWING TRIP MODE

Selection of the `Early` trip mode results in an instantaneous trip after the last step in the out-of-step tripping sequence is completed. The early trip mode stresses the circuit breakers as the currents at that moment are high (the electromotive forces of the two equivalent systems are approximately 180° apart). Selection of the `Delayed` trip mode results in a trip at the moment when the impedance locus leaves the outer characteristic. Delayed trip mode relaxes the operating conditions for the breakers as the currents at that moment are low. Make the selection considering the capability of the breakers in the system.

POWER SWING EVENTS

Enables and disables the logging of power swing detect events in the sequence of events recorder.

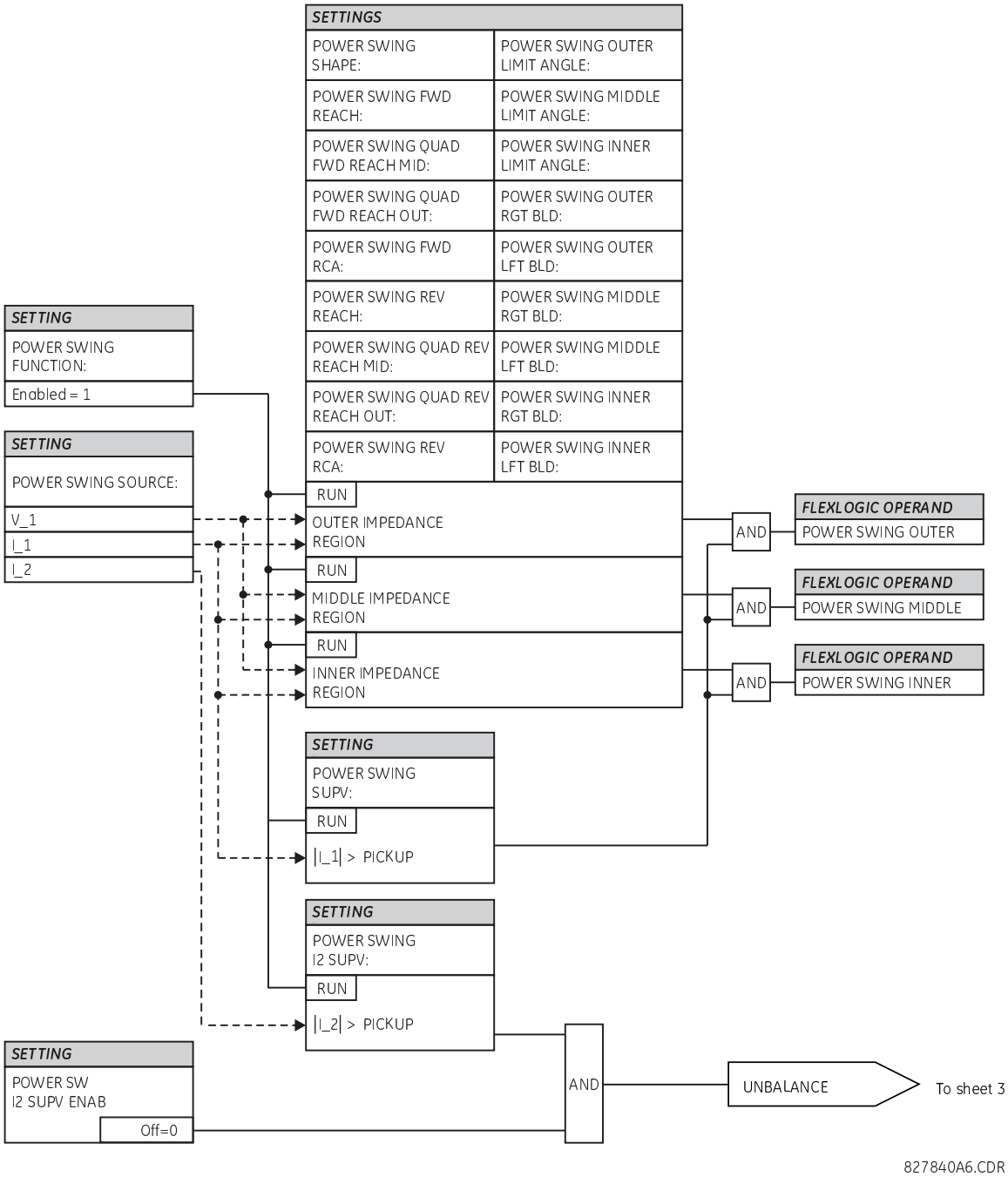

Figure 283: Power swing detect logic (Sheet 1 of 3)

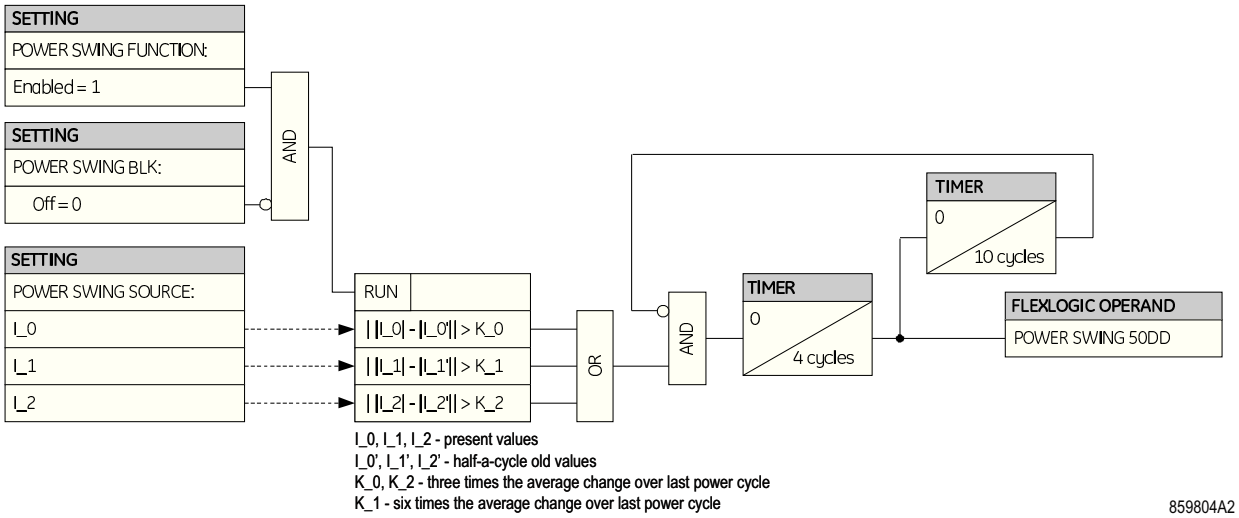

Figure 284: Power swing detect logic (Sheet 2 of 3)

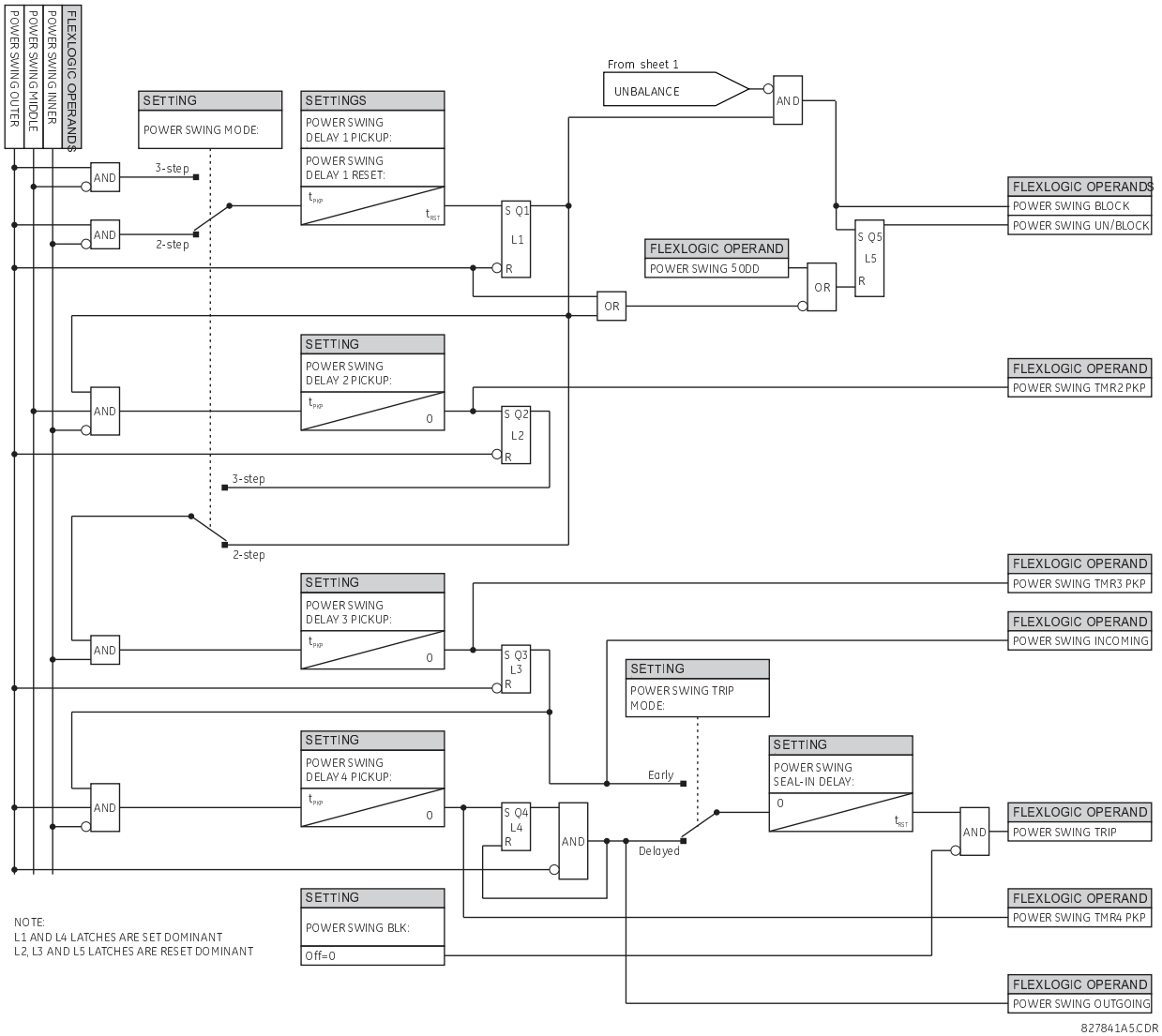

Figure 285: Power swing detect logic (Sheet 3 of 3)

9.7.5 LOAD ENCROACHMENT

SETTINGS > GROUPED ELEMENTS > SETTING GROUP 1(6) > LOAD ENCROACHMENT

■ LOAD ENCROACHMENT ■	⇔ LOAD ENCROACHMENT FUNCTION: Disabled	Range: Disabled, Enabled
	⇕ LOAD ENCROACHMENT SOURCE: SRC 1	Range: SRC <n>
	⇕ LOAD ENCROACHMENT MIN VOLT: 0.250 pu	Range: 0.004 to 3.000 pu in steps of 0.001
	⇕ LOAD ENCROACHMENT REACH: 1.00 Ω	Range: 0.02 to 250.00 ohms in steps of 0.01
	⇕ LOAD ENCROACHMENT ANGLE: 30°	Range: 5 to 80° in steps of 1
	⇕ LOAD ENCROACHMENT PKP DELAY: 0.000 s	Range: 0.000 to 65.535 s in steps of 0.001
	⇕ LOAD ENCROACHMENT RST DELAY: 0.000 s	Range: 0.000 to 65.535 s in steps of 0.001
	⇕ LOAD ENCRMNT BLK: Off	Range: FlexLogic operand
	⇕ LOAD ENCROACHMENT TARGET: Self-reset	Range: Self-reset, Latched, Disabled
	⇑ LOAD ENCROACHMENT EVENTS: Disabled	Range: Disabled, Enabled

The load encroachment element responds to the positive-sequence voltage and current and applies a characteristic as shown in the figure.

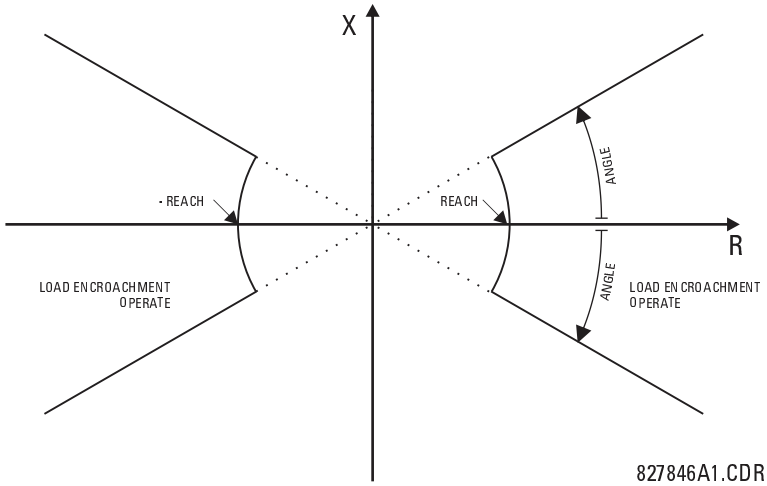

Figure 286: Load encroachment characteristic

The element operates if the positive-sequence voltage is above a settable level and asserts its output signal that can be used to block selected protection elements, such as distance or phase overcurrent. The following figure shows an effect of the load encroachment characteristics used to block the quadrilateral distance element.

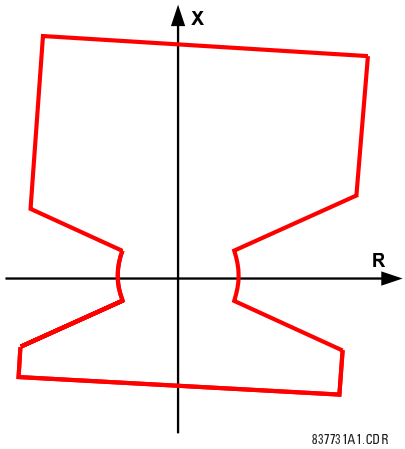

Figure 287: Load encroachment applied to distance element

LOAD ENCROACHMENT MIN VOLT

This setting specifies the minimum positive-sequence voltage required for operation of the element. When the voltage is below this threshold, a blocking signal is not asserted by the element. When selecting this setting, remember that the Product measures the phase-to-ground sequence voltages regardless of the VT connection.

The nominal VT secondary voltage as specified with the ***SYSTEM SETUP > AC INPUTS ð VOLTAGE BANK X5 > PHASE VT SECONDARY*** setting is the per-unit base for this setting.

LOAD ENCROACHMENT REACH

This setting specifies the resistive reach of the element as shown in the Load Encroachment Characteristic diagram. Enter this setting in secondary ohms and calculate it as the positive-sequence resistance seen by the relay under maximum load conditions and unity power factor.

LOAD ENCROACHMENT ANGLE

This setting specifies the size of the blocking region as shown on the Load Encroachment Characteristic diagram and applies to the positive-sequence impedance.

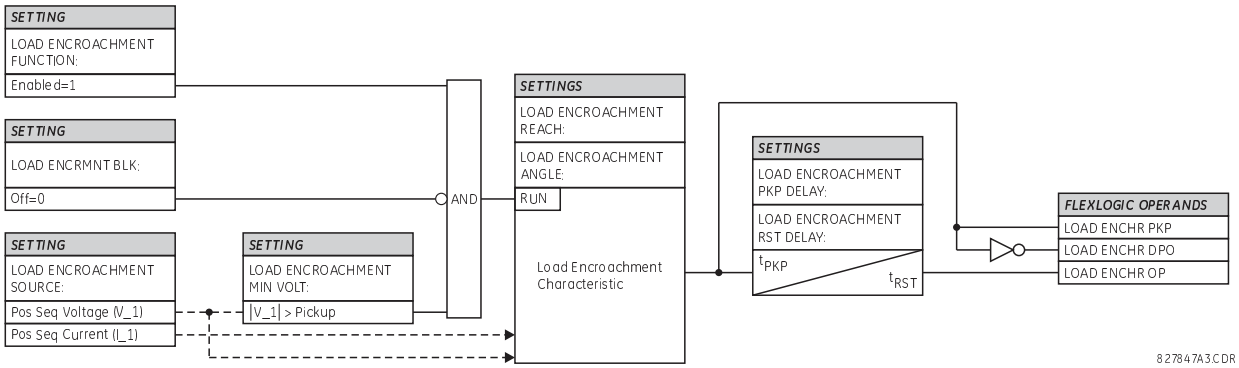

Figure 288: Load encroachment logic

9.7.6 PHASE CURRENT

SETTINGS > GROUPED ELEMENTS > SETTING GROUP 1(6) > PHASE CURRENT

■ PHASE CURRENT ■	⇔	■ PHASE TOC <n> ■	NOT ALL UR MODELS

⇕	■ PHASE IOC <n> ■	NOT ALL UR MODELS
⇧	■ PHASE ■ DIRECTIONAL <n>	NOT ALL UR MODELS

Note:
n = number of elements

9.7.6.1 INVERSE TOC CURVE CHARACTERISTICS

The inverse time overcurrent curves used by the time overcurrent elements are the IEEE, IEC, GE Type IAC, and I2t standard curve shapes. This allows for simplified coordination with downstream devices.

If none of these curve shapes is adequate, FlexCurves can be used to customize the inverse time curve characteristics. The definite time curve is also an option that can be appropriate if only simple protection is required.

Overcurrent curve types

IEEE	IEC	GE type IAC	Other
IEEE Extremely Inverse	IEC Curve A (BS142)	IAC Extremely Inverse	I2t
IEEE Very Inverse	IEC Curve B (BS142)	IAC Very Inverse	FlexCurves A, B, C, and D
IEEE Moderately Inverse	IEC Curve C (BS142)	IAC Inverse	Recloser Curves
	IEC Short Inverse	IAC Short Inverse	Definite Time

A time dial multiplier setting allows selection of a multiple of the base curve shape (where the time dial multiplier = 1) with the curve shape setting (***CURVE***). Unlike the electromechanical time dial equivalent, operate times are directly proportional to the time multiplier setting (***TD MULTIPLIER***) . For example, all times for a multiplier of 10 are 10 times the multiplier 1 or base curve values. Setting the multiplier to zero results in an instantaneous response to all current levels above pickup.

Time overcurrent time calculations are made with an internal energy capacity memory variable. When this variable indicates that the energy capacity has reached 100%, a time overcurrent element operates. If less than 100% energy capacity is accumulated in this variable and the current falls below the dropout threshold of 97 to 98% of the pickup value, the variable must be reduced. Two methods of this resetting operation are available: “Instantaneous” and “Timed.” The “Instantaneous” selection is intended for applications with other relays, such as most static relays, which set the energy capacity directly to zero when the current falls below the reset threshold. The “Timed” selection can be used where the relay must coordinate with electromechanical relays.

The URs calculate operate time corresponding to the values in the range of 1.03 to 20 multiples of the pickup current. Above 20 multiples of the pickup current, URs clamp the operate time to the value at a multiple of 20, resulting in the flat part of the characteristics. Reset time is calculated in the range of 0 to 0.97 multiples of the pickup current.

IEEE Curves

The IEEE time overcurrent curve shapes conform to industry standards and the IEEE C37.112-1996 curve classifications for extremely, very, and moderately inverse curves. The IEEE curves are derived from the operate and reset time equations.

$$T = TDM \times \left[\frac{A}{\left(\frac{I}{I_{pickup}}\right)^{p} - 1} + B \right], \quad T_{RESET} = TDM \times \left[\frac{t_r}{1 - \left(\frac{I}{I_{pickup}}\right)^{2}} \right]$$

where:

- T = operate time (in seconds)
- TDM = Multiplier setting
- I = input current
- I_{pickup} = Pickup Current setting
- A, B, p = constants defined in the table
- T_{RESET} = reset time in seconds (assuming energy capacity is 100% and RESET is “Timed”)
- t_r = characteristic constant defined in the table

IEEE inverse time curve constants

IEEE curve shape	A	B	p	tr
IEEE Extremely Inverse	28.2	0.1217	2.0000	29.1
IEEE Very Inverse	19.61	0.491	2.0000	21.6
IEEE Moderately Inverse	0.0515	0.1140	0.02000	4.85

IEEE curve trip times (in seconds)

Multiplier (TDM)	Current (I / Ipickup)									
	1.5	2.0	3.0	4.0	5.0	6.0	7.0	8.0	9.0	10.0
IEEE Extremely Inverse										
0.5	11.341	4.761	1.823	1.001	0.648	0.464	0.355	0.285	0.237	0.203
1.0	22.682	9.522	3.647	2.002	1.297	0.927	0.709	0.569	0.474	0.407
2.0	45.363	19.043	7.293	4.003	2.593	1.855	1.418	1.139	0.948	0.813
4.0	90.727	38.087	14.587	8.007	5.187	3.710	2.837	2.277	1.897	1.626
6.0	136.090	57.130	21.880	12.010	7.780	5.564	4.255	3.416	2.845	2.439
8.0	181.454	76.174	29.174	16.014	10.374	7.419	5.674	4.555	3.794	3.252
10.0	226.817	95.217	36.467	20.017	12.967	9.274	7.092	5.693	4.742	4.065
IEEE Very Inverse										
0.5	8.090	3.514	1.471	0.899	0.654	0.526	0.450	0.401	0.368	0.345
1.0	16.179	7.028	2.942	1.798	1.308	1.051	0.900	0.802	0.736	0.689
2.0	32.358	14.055	5.885	3.597	2.616	2.103	1.799	1.605	1.472	1.378
4.0	64.716	28.111	11.769	7.193	5.232	4.205	3.598	3.209	2.945	2.756
6.0	97.074	42.166	17.654	10.790	7.849	6.308	5.397	4.814	4.417	4.134
8.0	129.432	56.221	23.538	14.387	10.465	8.410	7.196	6.418	5.889	5.513
10.0	161.790	70.277	29.423	17.983	13.081	10.513	8.995	8.023	7.361	6.891
IEEE Moderately Inverse										
0.5	3.220	1.902	1.216	0.973	0.844	0.763	0.706	0.663	0.630	0.603
1.0	6.439	3.803	2.432	1.946	1.688	1.526	1.412	1.327	1.260	1.207
2.0	12.878	7.606	4.864	3.892	3.377	3.051	2.823	2.653	2.521	2.414
4.0	25.756	15.213	9.729	7.783	6.753	6.102	5.647	5.307	5.041	4.827
6.0	38.634	22.819	14.593	11.675	10.130	9.153	8.470	7.960	7.562	7.241
8.0	51.512	30.426	19.458	15.567	13.507	12.204	11.294	10.614	10.083	9.654
10.0	64.390	38.032	24.322	19.458	16.883	15.255	14.117	13.267	12.604	12.068

IEC Curves:IEC; Overcurrent curves:IEC; Equations:IEC curvescurves

For European applications, the relay offers three standard curves defined in IEC 255-4 and British standard BS142. These are defined as IEC Curve A, IEC Curve B, and IEC Curve C. The IEC curves are derived by the operate and reset time equations.

$$T = TDM \times \left[\frac{K}{(I/I_{pickup})^{E} - 1}\right], \quad T_{RESET} = TDM \times \left[\frac{t_r}{1 - (I/I_{pickup})^{2}}\right]$$

where:

- T = operate time (in seconds)
- TDM = Multiplier setting
- I = input current
- I_{pickup} = Pickup Current setting
- K, E = constants defined in the table
- t_r = characteristic constant defined in the table
- T_{RESET} = reset time in seconds (assuming energy capacity is 100% and RESET is “Timed”)

IEC (BS) inverse time curve constants

IEC (BS) curve shape	K	E	tr
IEC Curve A (BS142)	0.140	0.020	9.7
IEC Curve B (BS142)	13.500	1.000	43.2
IEC Curve C (BS142)	80.000	2.000	58.2
IEC Short Inverse	0.050	0.040	0.500

IEC curve trip times (in seconds)

Multiplier (TDM)	Current (I / Ipickup)									
	1.5	2.0	3.0	4.0	5.0	6.0	7.0	8.0	9.0	10.0
IEC Curve A										
0.05	0.860	0.501	0.315	0.249	0.214	0.192	0.176	0.165	0.156	0.149
0.10	1.719	1.003	0.630	0.498	0.428	0.384	0.353	0.330	0.312	0.297
0.20	3.439	2.006	1.260	0.996	0.856	0.767	0.706	0.659	0.623	0.594
0.40	6.878	4.012	2.521	1.992	1.712	1.535	1.411	1.319	1.247	1.188
0.60	10.317	6.017	3.781	2.988	2.568	2.302	2.117	1.978	1.870	1.782
0.80	13.755	8.023	5.042	3.984	3.424	3.070	2.822	2.637	2.493	2.376
1.00	17.194	10.029	6.302	4.980	4.280	3.837	3.528	3.297	3.116	2.971
IEC Curve B										
0.05	1.350	0.675	0.338	0.225	0.169	0.135	0.113	0.096	0.084	0.075
0.10	2.700	1.350	0.675	0.450	0.338	0.270	0.225	0.193	0.169	0.150
0.20	5.400	2.700	1.350	0.900	0.675	0.540	0.450	0.386	0.338	0.300
0.40	10.800	5.400	2.700	1.800	1.350	1.080	0.900	0.771	0.675	0.600
0.60	16.200	8.100	4.050	2.700	2.025	1.620	1.350	1.157	1.013	0.900
0.80	21.600	10.800	5.400	3.600	2.700	2.160	1.800	1.543	1.350	1.200
1.00	27.000	13.500	6.750	4.500	3.375	2.700	2.250	1.929	1.688	1.500

Multiplier (TDM)	Current (I / Ipickup)									
	1.5	2.0	3.0	4.0	5.0	6.0	7.0	8.0	9.0	10.0
IEC Curve C										
0.05	3.200	1.333	0.500	0.267	0.167	0.114	0.083	0.063	0.050	0.040
0.10	6.400	2.667	1.000	0.533	0.333	0.229	0.167	0.127	0.100	0.081
0.20	12.800	5.333	2.000	1.067	0.667	0.457	0.333	0.254	0.200	0.162
0.40	25.600	10.667	4.000	2.133	1.333	0.914	0.667	0.508	0.400	0.323
0.60	38.400	16.000	6.000	3.200	2.000	1.371	1.000	0.762	0.600	0.485
0.80	51.200	21.333	8.000	4.267	2.667	1.829	1.333	1.016	0.800	0.646
1.00	64.000	26.667	10.000	5.333	3.333	2.286	1.667	1.270	1.000	0.808
IEC Short Inverse										
0.05	0.153	0.089	0.056	0.044	0.038	0.034	0.031	0.029	0.027	0.026
0.10	0.306	0.178	0.111	0.088	0.075	0.067	0.062	0.058	0.054	0.052
0.20	0.612	0.356	0.223	0.175	0.150	0.135	0.124	0.115	0.109	0.104
0.40	1.223	0.711	0.445	0.351	0.301	0.269	0.247	0.231	0.218	0.207
0.60	1.835	1.067	0.668	0.526	0.451	0.404	0.371	0.346	0.327	0.311
0.80	2.446	1.423	0.890	0.702	0.602	0.538	0.494	0.461	0.435	0.415
1.00	3.058	1.778	1.113	0.877	0.752	0.673	0.618	0.576	0.544	0.518

$$T = TDM \times \left(A + \frac{B}{(I/I_{pkp}) - C} + \frac{D}{((I/I_{pkp}) - C)^2} + \frac{E}{((I/I_{pkp}) - C)^3} \right) \quad , \quad T_{RESET} = TDM \times \left[\frac{t_r}{1 - (I/I_{pkp})^2} \right]$$

where:

- T = operate time (in seconds)
- TDM = Multiplier setting
- I = Input current
- I_{pkp} = Pickup Current setting
- A to E = constants defined in the table
- t_r = characteristic constant defined in the table
- T_{RESET} = reset time in seconds (assuming energy capacity is 100% and RESET is “Timed”)

IAC curves

The curves for the GE Vernova type IAC relay family are derived from the formulae:

GE type IAC inverse time curve constants

IAC curve shape	A	B	C	D	E	tr
IAC Extreme Inverse	0.0040	0.6379	0.6200	1.7872	0.2461	6.008
IAC Very Inverse	0.0900	0.7955	0.1000	–1.2885	7.9586	4.678
IAC Inverse	0.2078	0.8630	0.8000	–0.4180	0.1947	0.990
IAC Short Inverse	0.0428	0.0609	0.6200	–0.0010	0.0221	0.222

GE type IAC curve trip times

Multiplier (TDM)	Current (I / Ipickup)									
	1.5	2.0	3.0	4.0	5.0	6.0	7.0	8.0	9.0	10.0
IAC Extremely Inverse										
0.5	1.699	0.749	0.303	0.178	0.123	0.093	0.074	0.062	0.053	0.046
1.0	3.398	1.498	0.606	0.356	0.246	0.186	0.149	0.124	0.106	0.093
2.0	6.796	2.997	1.212	0.711	0.491	0.372	0.298	0.248	0.212	0.185
4.0	13.591	5.993	2.423	1.422	0.983	0.744	0.595	0.495	0.424	0.370
6.0	20.387	8.990	3.635	2.133	1.474	1.115	0.893	0.743	0.636	0.556
8.0	27.183	11.987	4.846	2.844	1.966	1.487	1.191	0.991	0.848	0.741
10.0	33.979	14.983	6.058	3.555	2.457	1.859	1.488	1.239	1.060	0.926
IAC Very Inverse										
0.5	1.451	0.656	0.269	0.172	0.133	0.113	0.101	0.093	0.087	0.083
1.0	2.901	1.312	0.537	0.343	0.266	0.227	0.202	0.186	0.174	0.165
2.0	5.802	2.624	1.075	0.687	0.533	0.453	0.405	0.372	0.349	0.331
4.0	11.605	5.248	2.150	1.374	1.065	0.906	0.810	0.745	0.698	0.662
6.0	17.407	7.872	3.225	2.061	1.598	1.359	1.215	1.117	1.046	0.992
8.0	23.209	10.497	4.299	2.747	2.131	1.813	1.620	1.490	1.395	1.323
10.0	29.012	13.121	5.374	3.434	2.663	2.266	2.025	1.862	1.744	1.654
IAC Inverse										
0.5	0.578	0.375	0.266	0.221	0.196	0.180	0.168	0.160	0.154	0.148
1.0	1.155	0.749	0.532	0.443	0.392	0.360	0.337	0.320	0.307	0.297
2.0	2.310	1.499	1.064	0.885	0.784	0.719	0.674	0.640	0.614	0.594
4.0	4.621	2.997	2.128	1.770	1.569	1.439	1.348	1.280	1.229	1.188
6.0	6.931	4.496	3.192	2.656	2.353	2.158	2.022	1.921	1.843	1.781
8.0	9.242	5.995	4.256	3.541	3.138	2.878	2.695	2.561	2.457	2.375
10.0	11.552	7.494	5.320	4.426	3.922	3.597	3.369	3.201	3.072	2.969
IAC Short Inverse										
0.5	0.072	0.047	0.035	0.031	0.028	0.027	0.026	0.026	0.025	0.025
1.0	0.143	0.095	0.070	0.061	0.057	0.054	0.052	0.051	0.050	0.049
2.0	0.286	0.190	0.140	0.123	0.114	0.108	0.105	0.102	0.100	0.099
4.0	0.573	0.379	0.279	0.245	0.228	0.217	0.210	0.204	0.200	0.197
6.0	0.859	0.569	0.419	0.368	0.341	0.325	0.314	0.307	0.301	0.296
8.0	1.145	0.759	0.559	0.490	0.455	0.434	0.419	0.409	0.401	0.394
10.0	1.431	0.948	0.699	0.613	0.569	0.542	0.524	0.511	0.501	0.493

I^2t curves

The I^2t curves are derived as follows:

$$T = TDM \times \left[\frac{100}{\left(\frac{I}{I_{pickup}} \right)^2} \right], \quad T_{RESET} = TDM \times \left[\frac{100}{\left(\frac{I}{I_{pickup}} \right)^{-2}} \right]$$

where:

- T = Operate time (in seconds)
- TDM = Multiplier setting
- I = Input current
- I_{pickup} = Pickup Current setting
- T_{RESET} = reset time in seconds (assuming energy capacity is 100% and RESET is “Timed”)

I^2t curve trip times

Multiplier (TDM)	Current (I / Ipickup)									
	1.5	2.0	3.0	4.0	5.0	6.0	7.0	8.0	9.0	10.0
0.01	0.44	0.25	0.11	0.06	0.04	0.03	0.02	0.02	0.01	0.01
0.10	4.44	2.50	1.11	0.63	0.40	0.28	0.20	0.16	0.12	0.10
1.00	44.44	25.00	11.11	6.25	4.00	2.78	2.04	1.56	1.23	1.00
10.00	444.44	250.00	111.11	62.50	40.00	27.78	20.41	15.63	12.35	10.00
100.00	4444.4	2500.0	1111.1	625.00	400.00	277.78	204.08	156.25	123.46	100.00
600.00	26666.7	15000.0	6666.7	3750.0	2400.0	1666.7	1224.5	937.50	740.74	600.00

FlexCurves

FlexCurves are described in the FlexCurves section later in this chapter. The curve shapes for the FlexCurves are derived from the formulae:

$$T = TDM \times \left[\text{FlexCurve Time at} \left(\frac{I}{I_{pickup}}\right)\right] \quad \text{when} \left(\frac{I}{I_{pickup}}\right) \geq 1.00$$

$$T_{RESET} = TDM \times \left[\text{FlexCurve Time at} \left(\frac{I}{I_{pickup}}\right)\right] \quad \text{when} \left(\frac{I}{I_{pickup}}\right) \leq 0.98$$

where:

- T = operate time (in seconds)
- TDM = Multiplier setting
- I = Input Current
- I_{pickup} = Pickup Current setting
- T_{RESET} = Reset Time in seconds (assuming energy capacity is 100% and RESET: Timed)

Definite time curve

The Definite Time curve shape operates as soon as the pickup level is exceeded for a specified period of time. The base definite time curve delay is in seconds. The curve multiplier of 0.00 to 600.00 makes this delay adjustable from instantaneous to 600.00 seconds in steps of 10 ms. The definite time curve shapes are defined as follows:

$$T = TDM \text{ in seconds, when } I > I_{pickup}$$

$$T_{RESET} = TDM \text{ in seconds}$$

where:

- T = Operate Time (in seconds)
- TDM = Multiplier setting

- I = Input Current
- I_{pickup} = Pickup Current setting
- T_{RESET} = Reset Time in seconds (assuming energy capacity is 100% and RESET: Timed)

Recloser curves

The Product uses the FlexCurve feature to facilitate programming of many recloser curves. See the FlexCurves settings section earlier in this chapter for details.

9.7.6.2 PHASE TIME OVERCURRENT (ANSI 51P, IEC PTOC)

SETTINGS > GROUPED ELEMENTS > SETTING GROUP 1(6) > PHASE CURRENT >PHASE TOC 1(16)

> *Note:*
> *Only Phase TOC 1 is shown*

■ PHASE TOC 1 ■	⇔	PHASE TOC 1 FUNCTION: Disabled	Range: Disabled, Enabled
	⇕	PHASE TOC 1 SIGNAL SOURCE: SRC 1	Range: SRC 1 to SRC 4 Not applicable to relays with 9-2LE
	⇕	PHASE TOC 1 INPUT: Phasor	Range: Phasor, RMS
	⇕	PHASE TOC1 PICKUP: 1.000 pu	Range:0.020 to 30.000 pu in steps of 0.001
	⇕	PHASE TOC1 CURVE: IEEE Mod Inv	Range: see Overcurrent Curve Types table
	⇕	PHASE TOC1 TD MULTIPLIER: 1.00	Range: 0.00 to 600.00 in steps of 0.01
	⇕	PHASE TOC1 RESET: Instantaneous	Range: Instantaneous, Timed
	⇕	PHASE TOC1 VOLTAGE RESTRAINT: Disabled	Range: Disabled, Enabled
	⇕	PHASE TOC1 BLOCK A: Off	Range: FlexLogic operand
	⇕	PHASE TOC1 BLOCK B: Off	Range: FlexLogic operand
	⇕	PHASE TOC1 BLOCK C: Off	Range: FlexLogic operand
	⇕	PHASE TOC1 TARGET: Self-reset	Range: Self-reset, Latched, Disabled Not applicable to relays with 9-2LE
	⇧	PHASE TOC1 EVENTS: Disabled	Range: Disabled, Enabled Not applicable to relays with 9-2LE

The phase time overcurrent element can provide a specified time-delay operating characteristic versus the applied current or be used as a simple definite time element. The phase current input quantities can be programmed as fundamental phasor magnitude or total waveform RMS magnitude as required by the application.

Two methods of resetting operation are available: `Timed` and `Instantaneous` (see the Inverse TOC Curve Characteristics section earlier for details on curve setup, trip times, and reset operation). When the element is blocked, the time accumulator resets according to the reset characteristic. For example, if the element reset characteristic is set to “Instantaneous” and the element is blocked, the time accumulator clears immediately.

The ***PHASE TOC1 PICKUP*** setting can be reduced dynamically by a voltage restraint feature (when enabled). This is accomplished via the multipliers (Mvr) corresponding to the phase-phase voltages of the voltage restraint characteristic curve (see the figure); the pickup level is calculated as Mvr times the ***PHASE TOC1 PICKUP*** setting. If the voltage restraint feature is disabled, the pickup level always remains at the setting value.

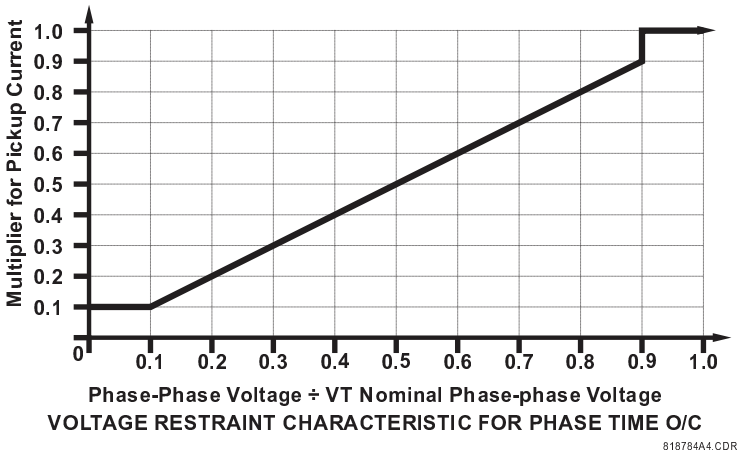

Figure 289: Phase time overcurrent voltage restraint characteristic

FUNCTION

This setting enables and disables the phase time overcurrent protection element.

SIGNAL SOURCE

Selects the signal source for the phase time overcurrent protection element.

INPUT

Selects how phase current input quantities are interpreted by the Product. Inputs can be selected as fundamental phasor magnitudes or total waveform RMS magnitudes as required by the application.

PICKUP

Specifies the phase time overcurrent pickup level in per-unit values.

CURVE

Selects the time inverse overcurrent curve style.

TD MULTIPLIER

When TOC1 CURVE setting is set to Definite Time, this setting defines time delay to element pickup. When TOC1 CURVE setting is set to any inverse time curve, this setting defines inverse curve multiplier, used in the chosen curve equation.

RESET

The “Instantaneous” reset method is intended for applications with other relays, such as most static relays, which set the energy capacity directly to zero when the current falls below the reset threshold. The “Timed” reset method can be used where the relay must coordinate with electromechanical relays.

VOLTAGE RESTRAINT

Enables and disables the phase time overcurrent voltage restraint feature.

BLOCK A

Assertion of the operand assigned to this setting blocks phase A of the phase time overcurrent element.

EVENTS

Enables and disables the logging of phase time overcurrent events in the sequence of events recorder

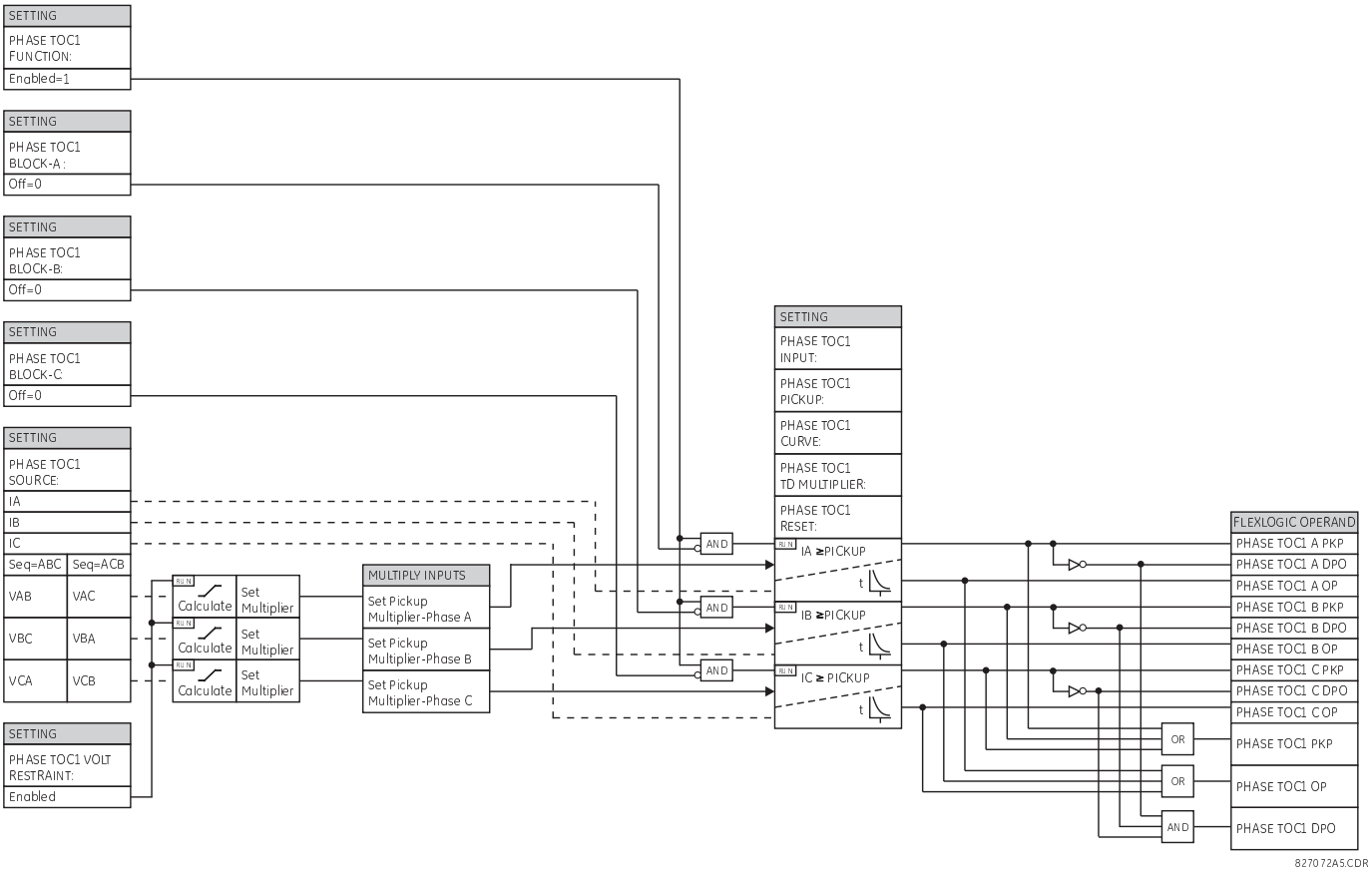

Figure 290: Phase time overcurrent 1 logic

9.7.6.3 PHASE INSTANTANEOUS OVERCURRENT (ANSI 50P, IEC PIOC)

SETTINGS > GROUPED ELEMENTS > SETTING GROUP 1(6) > PHASE CURRENT >PHASE IOC 1(8)

> *Note:*
> *Only Phase IOC 1 is shown*

■ PHASE IOC 1 ■	⇔	PHASE IOC 1 FUNCTION: Disabled	Range: Disabled, Enabled
	⇕	PHASE IOC 1 SIGNAL SOURCE: SRC 1	Range: SRC <n> Not applicable to relays with 9-2LE

⇕	PHASE IOC1 PICKUP: 1.000 pu	Range: 0.005 to 30.000 pu in steps of 0.001
⇕	PHASE IOC1 PICKUP DELAY: 0.00 s	Range: 0.00 to 600.00 s in steps of 0.01
⇕	PHASE IOC1 RESET DELAY : 0.00 s	Range: 0.00 to 600.00 in steps of 0.01
⇕	PHASE IOC1 BLOCK A: Off	Range: FlexLogic operand
⇕	PHASE IOC1 BLOCK B: Off	Range: FlexLogic operand
⇕	PHASE IOC1 BLOCK C: Off	Range: FlexLogic operand
⇕	PHASE IOC1 TARGET: Self-reset	Range: Self-reset, Latched, Disabled Not applicable to relays with 9-2LE
⇧	PHASE IOC1 EVENTS: Disabled	Range: Disabled, Enabled Not applicable to relays with 9-2LE

The phase instantaneous overcurrent element can be used as an instantaneous element with no intentional delay or as a definite time element. The input current is the fundamental phasor magnitude.

FUNCTION

This setting enables and disables the phase instantaneous overcurrent protection element.

SOURCE

Selects the signal source for the phase instantaneous overcurrent protection element.

PICKUP

Specifies the phase instantaneous overcurrent pickup level in per-unit values.

DELAY

Delays the assertion of the PHASE IOC OP operands. It is used to achieve timing coordination with other elements and relays.

RESET DELAY

Specifies a delay for the reset of the phase instantaneous overcurrent element between the operate output state and the return to logic 0 after the input passes outside the defined pickup range. This setting is used to ensure that the relay output contacts are closed long enough to ensure reception by downstream equipment.

BLOCK A

Assertion of the operand assigned to this setting block’s phase A of the phase instantaneous overcurrent element.

EVENTS

Enables and disables the logging of phase instantaneous overcurrent events in the sequence of events recorder.

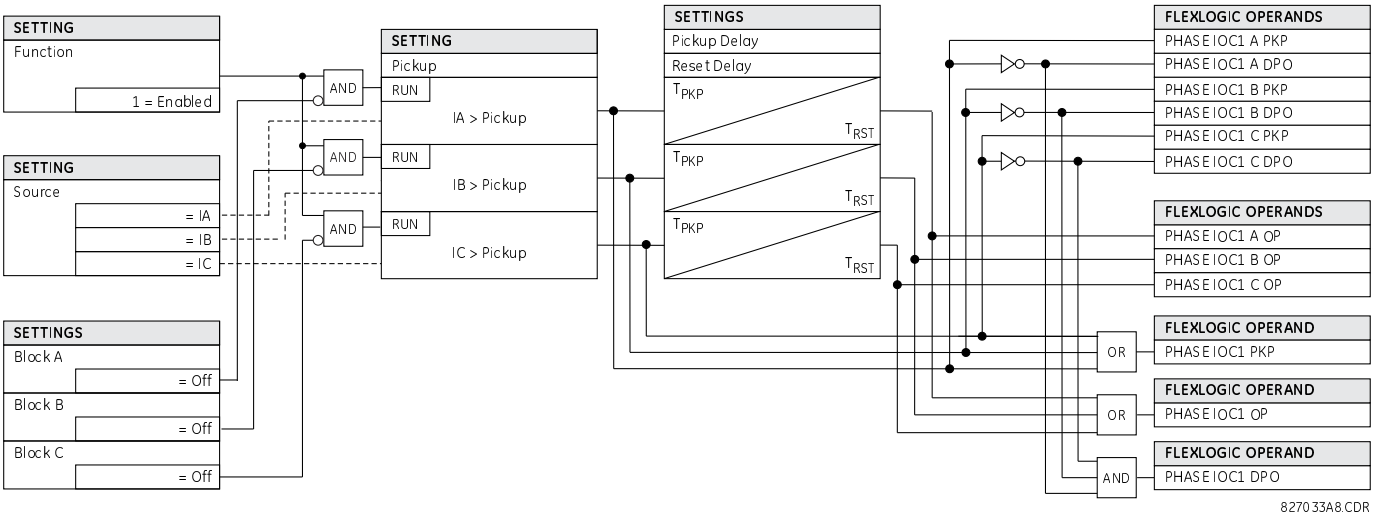

Figure 291: Phase instantaneous overcurrent logic

9.7.6.4 PHASE DIRECTIONAL OVERCURRENT (ANSI 67P, IEC PDOC/PTOC)

SETTINGS > GROUPED ELEMENTS > SETTING GROUP 1(6) > PHASE CURRENT >PHASE DIRECTIONAL1(2)

> *Note:*
> *Only Phase Directional 1 is shown*

■ PHASE ■ DIRECTIONAL 1	⇔	PHASE DIR 1 FUNCTION: Disabled	Range: Disabled, Enabled
	⇕	PHASE DIR 1 SIGNAL SOURCE: SRC 1	Range: SRC <n> Not applicable to relays with 9-2LE
	⇕	PHASE DIR 1 BLOCK: Off	Range: FlexLogic operand
	⇕	PHASE DIR 1 ECA: 30°	Range: 0 to 359° in steps of 1
	⇕	PHASE DIR POL V1 THRESHOLD: 0.700 pu	Range: 0.004 to 3.000 pu in steps of 0.001
	⇕	PHASE DIR 1 BLOCK WHEN V MEM EXP: No	Range: No, Yes
	⇕	PHASE DIR 1 TARGET: Self-reset	Range: Self-reset, Latched, Disabled Not applicable to relays with 9-2LE
	⇧	PHASE DIR 1 EVENTS: Disabled	Range: Disabled, Enabled Not applicable to relays with 9-2LE

> *Note:*
> *The TARGET setting is not user-selectable and forced to* `Disabled`*. If Targets are required from directional elements, it can be achieved by assigning directional element output to a digital element, where targets selection can be used as required.*

The phase directional elements (one for each of phases A, B, and C) determine the phase current flow direction for steady state and fault conditions and can be used to control the operation of the phase overcurrent elements via the BLOCK inputs of these elements.

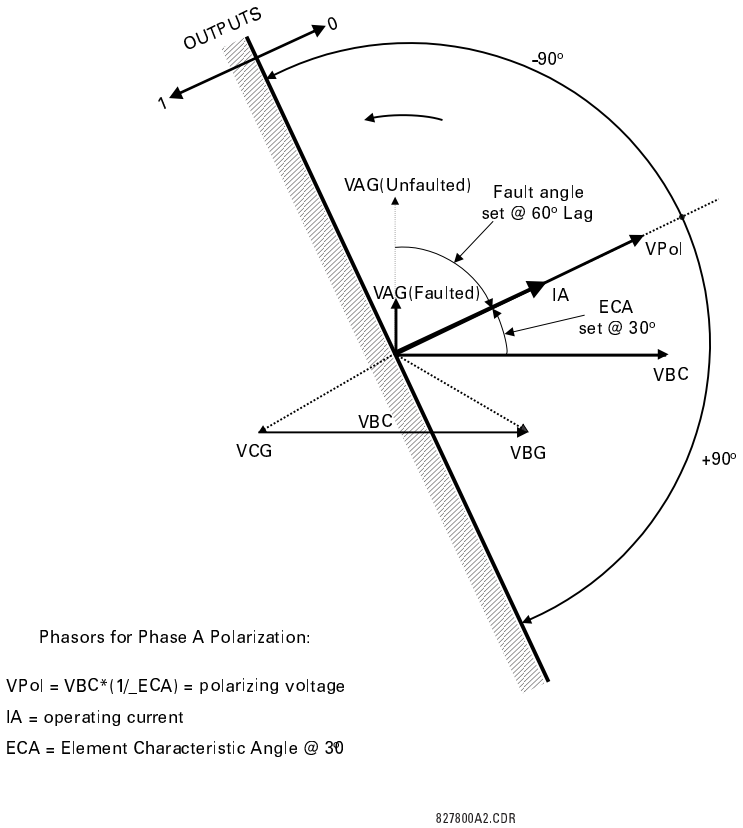

Figure 292: Phase A directional polarization

This element is intended to apply a block signal to an overcurrent element to prevent an operation when current is flowing in a particular direction. The direction of current flow is determined by measuring the phase angle between the current from the phase CTs and the line-line voltage from the VTs, based on the 90° or quadrature connection. If there is a requirement to supervise overcurrent elements for flows in opposite directions, such as can happen through a bus-tie breaker, program two phase directional elements with opposite element characteristic angle (ECA) settings.

To increase security for three phase faults very close to the VTs used to measure the polarizing voltage, a voltage memory feature is incorporated. This feature stores the polarizing voltage the moment before the voltage collapses, and uses it to determine direction. The voltage memory remains valid for one second after the voltage has collapsed.

The main component of the phase directional element is the phase angle comparator with two inputs: the operating signal (phase current) and the polarizing signal (the line voltage, shifted in the leading direction by the characteristic angle, ECA).

The table shows the operating and polarizing signals used for phase directional control.

Operating and polarizing signals

Phase	Operating signal	Polarizing signal Vpol	
		ABC phase sequence	ACB phase sequence
A	angle of IA	angle of VBC x (1∠ECA)	angle of VCB x (1∠ECA)
B	angle of IB	angle of VCA x (1∠ECA)	angle of VAC x 1∠ECA)
C	angle of IC	angle of VAB x (1∠ECA)	angle of VBA x (1∠ECA)

Mode of operation

- When the function is Disabled or the operating current is below 5% x CT nominal, the element output is logic 0
- When the function is Enabled or the operating current is above 5% x CT nominal, and the polarizing voltage is above the ***PRODUCT SETUP > DISPLAY PROPERTIES > VOLTAGE CUT-OFF LEVEL*** value, the element output is dependent on the phase angle between the operating and polarizing signals:
  - The element output is logic 0 when the operating current is within polarizing voltage ±90°
  - For all other angles, the element output is logic 1
- Once the voltage memory has expired, the phase overcurrent elements under directional control can be set to block or trip on overcurrent as follows:
  - When ***BLOCK WHEN V MEM EXP*** is set to Yes, the directional element blocks the operation of any phase overcurrent element under directional control when voltage memory expires
  - When ***BLOCK WHEN V MEM EXP*** is set to No, the directional element allows tripping of phase overcurrent elements under directional control when voltage memory expires

In all cases, directional blocking is permitted to resume when the polarizing voltage becomes greater than the polarizing voltage threshold.

Settings

PHASE DIR 1 FUNCTION

This setting enables and disables the phase directional overcurrent protection element.

PHASE DIR 1 SIGNAL SOURCE

This setting is used to select the source for the operating and polarizing signals. The operating current for the phase directional element is the phase current for the selected current source. The polarizing voltage is the line voltage from the phase VTs, based on the 90° or quadrature connection and shifted in the leading direction by the element characteristic angle (ECA).

PHASE DIR 1 BLOCK

Assertion of the operand assigned to this setting blocks operation of the phase directional overcurrent element.

PHASE DIR 1 ECA

This setting specifies the element characteristic angle, that is, the angle by which the polarizing voltage is shifted in the leading direction to achieve dependable operation. In the design of the UR-series elements, a block is applied to an element by asserting logic 1 at the blocking input. Program the phase directional overcurrent element using this setting so that the output is logic 1 for current in the non-tripping direction.

PHASE DIR 1 POL V THRESHOLD

This setting is used to establish the minimum level of voltage for which the phase angle measurement is healthy and reliable. Do not set this setting too low because the element can continue using the actual voltage already distorted by the fault instead of using healthy memory voltage—this can cause wrong directional discrimination.

PHASE DIR 1 BLOCK WHEN V MEM EXP

This setting is used to select the required operation upon expiration of voltage memory. When set to "Yes," the directional element blocks the operation of any phase overcurrent element under directional control, when voltage memory expires. When set to "No," the directional element allows tripping of phase overcurrent elements under directional control.

PHASE DIR 1 EVENTS

This setting enables and disables the logging of phase directional overcurrent events in the sequence of events recorder.

> *Note:*
> *The phase directional element responds to the forward load current. In the case of a following reverse fault, the element needs some time—in the order of 8 ms—to establish a blocking signal. Some protection elements, such as instantaneous overcurrent, respond to reverse faults before the blocking signal is established. Therefore, a coordination time of at least 10 ms must be added to all the instantaneous protection elements under the supervision of the phase directional element. If current reversal is of concern, a longer delay—in the order of 20 ms—is needed.*

Logic diagram

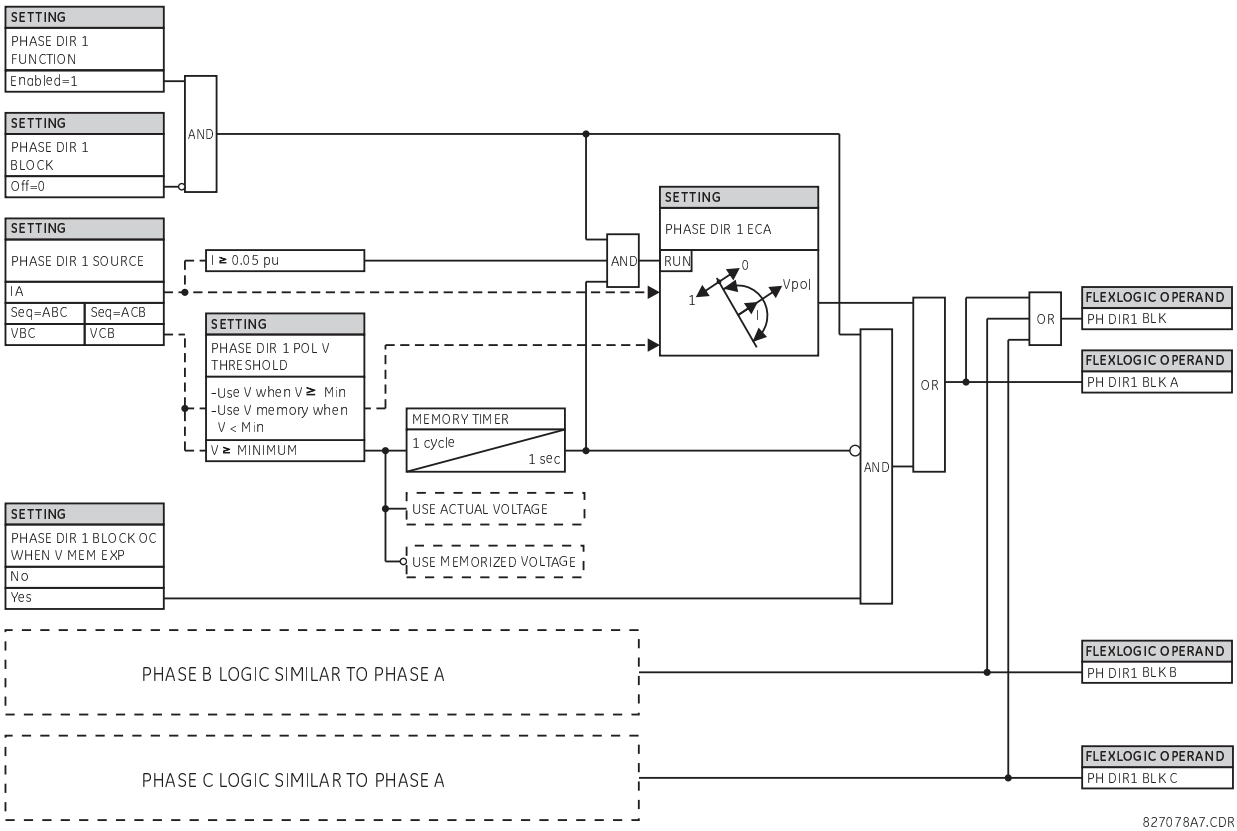

Figure 293: Phase directional logic

9.7.7 NEUTRAL CURRENT

SETTINGS > GROUPED ELEMENTS > SETTING GROUP 1(6) > NEUTRAL CURRENT

■ NEUTRAL CURRENT ■	⇔	■ NEUTRAL TOC <n> ■	NOT ALL UR MODELS
	⇕	■ NEUTRAL IOC <n> ■	NOT ALL UR MODELS
	⇧	■ NEUTRAL ■ DIRECTIONAL <n>	NOT ALL UR MODELS

Note:
n = number of elements

9.7.7.1 NEUTRAL TIME OVERCURRENT (ANSI 51N, IEC PTOC)

SETTINGS > GROUPED ELEMENTS > SETTING GROUP 1(6) > NEUTRAL CURRENT >NEUTRAL TOC 1(6)

Note:
Only Neutral TOC 1 is shown

■ NEUTRAL TOC 1 ■	⇔	NEUTRAL TOC 1 FUNCTION: Disabled	Range: Disabled, Enabled
	⇕	NEUTRAL TOC 1 SIGNAL SOURCE: SRC 1	Range: SRC <n> Not applicable to relays with 9-2LE
	⇕	NEUTRAL TOC 1 INPUT: Phasor	Range: Phasor, RMS
	⇕	NEUTRAL TOC1 PICKUP: 1.000 pu	Range:0.020 to 30.000 pu in steps of 0.001
	⇕	NEUTRAL TOC1 CURVE: IEEE Mod Inv	Range: see Overcurrent Curve Types table
	⇕	NEUTRAL TOC1 TD MULTIPLIER: 1.00	Range: 0.00 to 600.00 in steps of 0.01
	⇕	NEUTRAL TOC1 RESET: Instantaneous	Range: Instantaneous, Timed
	⇕	NEUTRAL TOC1 BLOCK: Off	Range: FlexLogic operand
	⇕	NEUTRAL TOC1 TARGET: Self-reset	Range: Self-reset, Latched, Disabled Not applicable to relays with 9-2LE
	⇧	NEUTRAL TOC1 EVENTS: Disabled	Range: Disabled, Enabled Not applicable to relays with 9-2LE

The neutral time overcurrent element can provide a desired time-delay operating characteristic versus the applied current or be used as a simple definite time element. The neutral current input value is a quantity calculated as 3I0 from the phase currents and can be programmed as fundamental phasor magnitude or total waveform RMS magnitude as required by the application.

Two methods of resetting operation are available: `Timed` and `Instantaneous` (see the Inverse TOC Curve Characteristics section for details on curve setup, trip times, and reset operation). When the element is blocked, the time accumulator resets according to the reset characteristic. For example, if the element reset characteristic is set to “Instantaneous” and the element is blocked, the time accumulator clears immediately.

NEUTRAL TOC1 FUNCTION

This setting enables and disables the neutral time overcurrent protection element.

NEUTRAL TOC1 SIGNAL SOURCE

this setting selects the signal source for the neutral time overcurrent protection element.

NEUTRAL TOC1 INPUT

This setting selects how neutral current input quantities are interpreted by the Product. Inputs can be selected as fundamental phasor magnitudes or total waveform RMS magnitudes as required by the application.

NEUTRAL TOC1 PICKUP

This setting specifies the neutral time overcurrent pickup level in per-unit values.

NEUTRAL TOC1 CURVE

This setting selects the inverse time overcurrent curve style.

NEUTRAL TOC1 TD MULTIPLIER

This setting specifies a multiple of the base curve shape specified by the CURVE setting. Programming this value to zero results in an instantaneous response to all current levels above pickup.

NEUTRAL TOC1 RESET

The “Instantaneous” reset method is intended for applications with other relays, such as most static relays, which set the energy capacity directly to zero when the current falls below the reset threshold. The “Timed” reset method can be used where the relay must coordinate with electromechanical relays.

NEUTRAL TOC1 BLOCK

Assertion of the operand assigned to this setting blocks operation of the neutral time overcurrent element.

NEUTRAL TOC1 EVENTS

This setting enables and disables the logging of neutral time overcurrent events in the sequence of events recorder

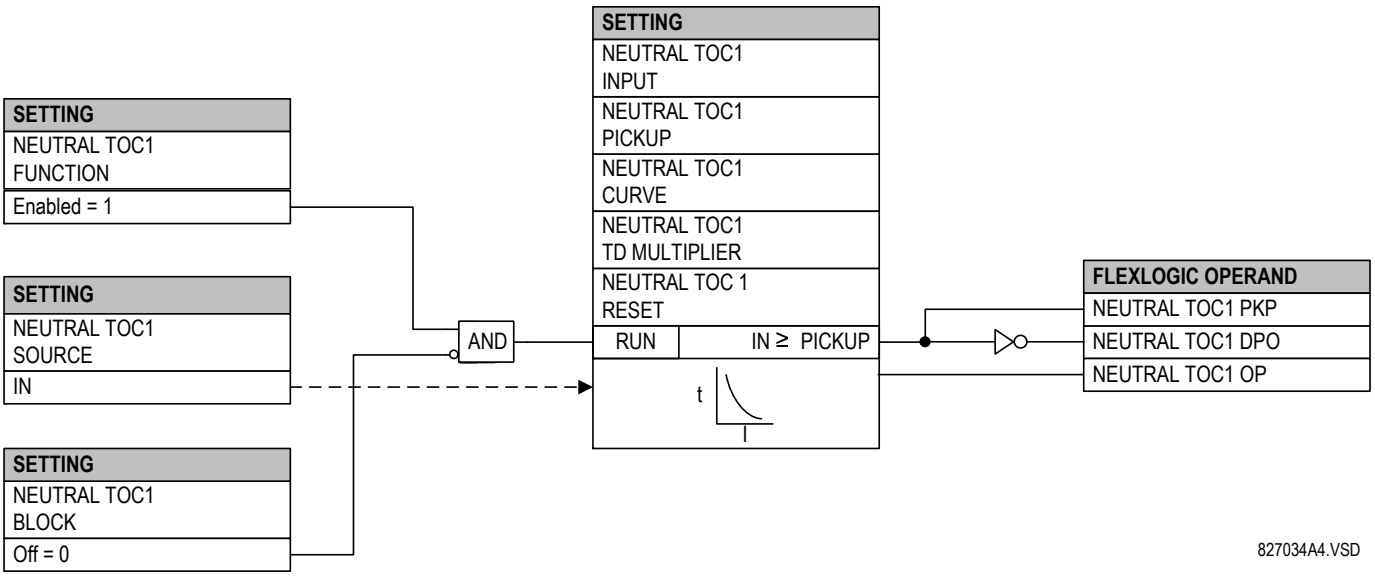

Figure 294: Neutral time overcurrent 1 logic

9.7.7.2 NEUTRAL INSTANTANEOUS OVERCURRENT (ANSI 50N, IEC PIOC)

SETTINGS > GROUPED ELEMENTS > SETTING GROUP 1(6) > NEUTRAL CURRENT >NEUTRAL IOC 1(8)

> *Note:*
> *Only Neutral IOC 1 is shown*

■ NEUTRAL IOC 1 ■	⇔	NEUTRAL IOC 1 FUNCTION: Disabled	Range: Disabled, Enabled
	⇕	NEUTRAL IOC 1 SIGNAL SOURCE: SRC 1	Range: SRC <n> Not applicable to relays with 9-2LE
	⇕	NEUTRAL IOC1 PICKUP: 1.000 pu	Range: 0.020 to 30.000 pu in steps of 0.001
	⇕	NEUTRAL IOC1 PICKUP DELAY: 0.00 s	Range: 0.00 to 600.00 s in steps of 0.01
	⇕	NEUTRAL IOC1 RESET DELAY : 0.00 s	Range: 0.00 to 600.00 in steps of 0.01
	⇕	NEUTRAL IOC1 BLOCK: Off	Range: FlexLogic operand
	⇕	NEUTRAL IOC1 TARGET: Self-reset	Range: Self-reset, Latched, Disabled Not applicable to relays with 9-2LE
	⇧	NEUTRAL IOC1 EVENTS: Disabled	Range: Disabled, Enabled Not applicable to relays with 9-2LE

The neutral instantaneous overcurrent element can be used as an instantaneous function with no intentional delay or as a definite time function. The element essentially responds to the magnitude of a neutral current fundamental frequency phasor calculated from the phase currents. A positive-sequence restraint is applied for better performance. A small portion (6.25%) of the positive-sequence current magnitude is subtracted from the zero-sequence current magnitude when forming the operating quantity of the element as follows:

$$I_{op} = 3 \text{ x } (|I_0| - K \text{ x } |I_1|) \text{ where } K = 1/16$$

The positive-sequence restraint allows for more sensitive settings by counterbalancing spurious zero-sequence currents resulting from:

- System unbalances under heavy load conditions
- Transformation errors of current transformers (CTs) during double-line and three-phase faults
- Switch-off transients during double-line and three-phase faults

The positive-sequence restraint must be considered when testing for pickup accuracy and response time (multiple of pickup). The operating quantity depends on how test currents are injected into the relay, where single-phase injection is Iop = 0.9375 x $I_{injected}$ and three-phase pure zero-sequence injection is:

$$I_{op} = 3 \text{ x } I_{injected}$$

NEUTRAL IOC1 FUNCTION

This setting enables and disables the neutral instantaneous overcurrent protection element.

NEUTRAL IOC1 SIGNAL SOURCE

This setting selects the signal source for the neutral instantaneous overcurrent protection element.

NEUTRAL IOC1 PICKUP

This setting specifies the neutral instantaneous overcurrent pickup level in per-unit values.

NEUTRAL IOC1 PICKUP DELAY

This setting delays the assertion of the NEUTRAL IOC OP operands. It is used to achieve timing coordination with other elements and relays.

NEUTRAL IOC1 RESET DELAY

This setting specifies a delay for the reset of the neutral instantaneous overcurrent element between the operate output state and the return to logic 0 after the input passes outside the defined pickup range. This setting is used to ensure that the relay output contacts are closed long enough to ensure reception by downstream equipment.

NEUTRAL IOC1 BLOCK

Assertion of the operand assigned to this setting blocks operation of the neutral instantaneous overcurrent element.

NEUTRAL IOC1 EVENTS

This setting enables and disables the logging of neutral instantaneous overcurrent events in the sequence of events recorder.

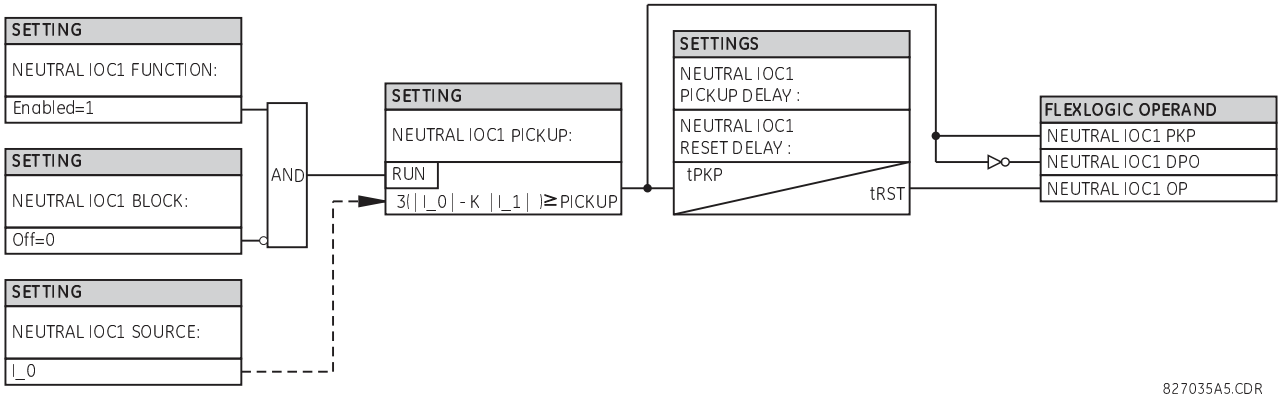

Figure 295: Neutral IOC1 logic

9.7.7.3 NEUTRAL DIRECTIONAL OVERCURRENT (ANSI 67N, IEC PDEF/PTOC)

SETTINGS > GROUPED ELEMENTS > SETTING GROUP 1(6) > NEUTRAL CURRENT > NEUTRAL DIRECTIONAL OC 1(2)

> *Note:*
> *Only Neutral Directional OC 1 is shown*

■ NEUTRAL ■ DIRECTIONAL OC1 1	⇔	NEUTRAL DIR OC1 FUNCTION: Disabled	Range: Disabled, Enabled
	⇕	NEUTRAL DIR OC 1 SOURCE: SRC 1	Range: SRC 1 to SRC 4 Not applicable to relays with 9-2LE
	⇕	NEUTRAL DIR OC1 POLARIZING: Voltage	Range: Voltage, Current, Dual, Dual-V, Dual-I
	⇕	NEUTRAL DIR OC1 POL VOLT: Calculated V0	Range: Calculated V0, Measured VX
	⇕	NEUTRAL DIR OC1 OP CURR: Calculated 3I0	Range: Calculated 3I0, Measured IG
	⇕	NEUTRAL DIR OC1 POSSEQ RESTRAINT: 0.063	Range: 0.000 to 0.500 in steps of 0.001
	⇕	NEUTRAL DIR OC1 OFFSET: 0.00 Ω	Range: 0.00 to 250.00 Ω in steps of 0.01
	⇕	NEUTRAL DIR OC1 FWD ECA: 75° Lag	Range: –90 to 90° in steps of 1

⇕	NEUTRAL DIR OC1 FWD LIMIT ANGLE: 90°	Range: 40 to 90° in steps of 1
⇕	NEUTRAL DIR OC1 FWD PICKUP: 0.050 pu	Range: 0.006 to 30.000 pu in steps of 0.001
⇕	NEUTRAL DIR OC1 REV LIMIT ANGLE: 90°	Range: 40 to 90° in steps of 1
⇕	NEUTRAL DIR OC1 REV PICKUP: 0.050 pu	Range: 0.006 to 30.000 pu in steps of 0.001
⇕	NEUTRAL DIR OC1 BLK: Off	Range: FlexLogic operand
⇕	NEUTRAL DIR OC1 TARGET: Self-reset	Range: Self-reset, Latched, Disabled Not applicable to relays with 9-2LE
⇧	NEUTRAL DIR OC1 EVENTS: Disabled	Range: Disabled, Enabled Not applicable to relays with 9-2LE

The neutral directional overcurrent element provides both forward and reverse fault direction indications for the NEUTRAL DIR OC1 FWD and NEUTRAL DIR OC1 REV operands, respectively. The output operand is asserted if the magnitude of the operating current is above a pickup level (overcurrent unit) and the fault direction is seen as forward or reverse, respectively (directional unit).

The overcurrent unit responds to the magnitude of a fundamental frequency phasor of either the neutral current calculated from the phase currents or the ground current. There are separate pickup settings for the forward-looking and reverse-looking functions. If set to use the calculated 3I_0, the element applies a positive-sequence restraint for better performance: a small user-programmable portion of the positive-sequence current magnitude is subtracted from the zero-sequence current magnitude when forming the operating quantity.

$$Iop = 3 \times (|I_0| - K \times |I_1|)$$

The positive-sequence restraint allows for more sensitive settings by counterbalancing spurious zero-sequence currents resulting from

- System unbalances under heavy load conditions
- Transformation errors of current transformers (CTs) during double-line and three-phase faults
- Switch-off transients during double-line and three-phase faults

The positive-sequence restraint must be considered when testing for pickup accuracy and response time (multiple of pickup). The operating quantity depends on the way the test currents are injected into the relay

- Single-phase injection: $I_{op} = (1 - K) \times I_{injected}$
- Three-phase pure zero-sequence injection: $I_{op} = 3 \times I_{injected}$.

The positive-sequence restraint is removed for low currents. If the positive-sequence current is below 0.8 pu, the restraint is removed by changing the constant K to zero. This facilitates better response to high-resistance faults when the unbalance is very small and there is no danger of excessive CT errors as the current is low.

The directional unit uses the zero-sequence current (I_0) or ground current (IG) for fault direction discrimination and can be programmed to use either zero-sequence voltage (`Calculated V0` or `Measured VX`), ground current (IG), or both for polarizing. Both zero-sequence current (I_0) and ground current (IG) must be greater than the ***CUT-OFF LEVEL*** setting value to be validated as the operating quantity for directional current. The following tables define the neutral directional overcurrent element. V_0 is the zero-sequence voltage, I_0 is the zero-sequence current, ECA is the element characteristic angle, and IG is the ground current.

Quantities for "calculated 3I0" configuration

Directional unit quantities				Overcurrent unit quantities
Polarizing mode	**Direction**	**Compared phasors**		
Voltage	Forward	–V_0 + Z_offset x I_0	I_0 x 1∠ECA	Iop = 3(|I_0| – K x |I_1|) if |I1| > 0.8 pu Iop = 3(|I_0|) if |I1| ≤ 0.8 pu
	Reverse	–V_0 + Z_offset x I_0	–I_0 x 1∠ECA	
Current	Forward	IG	I_0	
	Reverse	IG	–I_0	
Dual, Dual-V, Dual-I	Forward	–V_0 + Z_offset x I_0	I_0 x 1∠ECA	
		or		
		IG	I_0	
	Reverse	–V_0 + Z_offset x I_0	–I_0 x 1∠ECA	
		or		
		IG	–I_0	

Quantities for "measured IG" configuration

Directional unit quantities				Overcurrent unit quantities
Polarizing mode	**Direction**	**Compared phasors**		
Voltage	Forward	–V_0 + Z_offset x IG/3	IG x 1∠ECA	Iop = |IG|
	Reverse	–V_0 + Z_offset x IG/3	–IG x 1∠ECA	

where:

V_0 = 1/3 x (VAG + VBG + VCG) = zero sequence voltage

I_0 = 1/3 x IN = 1/3 x (IA + IB + IC) = zero sequence current

- ECA = element characteristic angle
- IG = ground current
- Z_offset is the offset impedance, for which magnitude is the OFFSET setting and angle is the FWD ECA

When ***NEUTRAL DIR OC1 POL VOLT*** is set to `Measured VX`, one-third of this voltage is used in place of V_0. The following figure explains the usage of the voltage polarized directional unit of the element.

The figure shows the voltage-polarized phase angle comparator characteristics for a phase A to ground fault, with:

- ECA = 90° (element characteristic angle = centerline of operating characteristic)
- FWD LA = 80° (forward limit angle = the ± angular limit with the ECA for operation)
- REV LA = 80° (reverse limit angle = the ± angular limit with the ECA for operation)

The element incorporates a current reversal logic. If the reverse direction is indicated for at least 1.25 of a power system cycle, the prospective forward indication is delayed by 1.5 of a power system cycle. The element is designed to emulate an electromechanical directional device. Larger operating and polarizing signals results in faster directional discrimination bringing more security to the element operation.

The forward-looking function is designed to be more secure as compared to the reverse-looking function, and therefore is to be used for the tripping direction. The reverse-looking function is designed to be faster as compared to the forward-looking function and is to be used for the blocking direction. This allows for better protection coordination.

Take the bias into account when using the neutral directional overcurrent element to directionalize other protection elements.

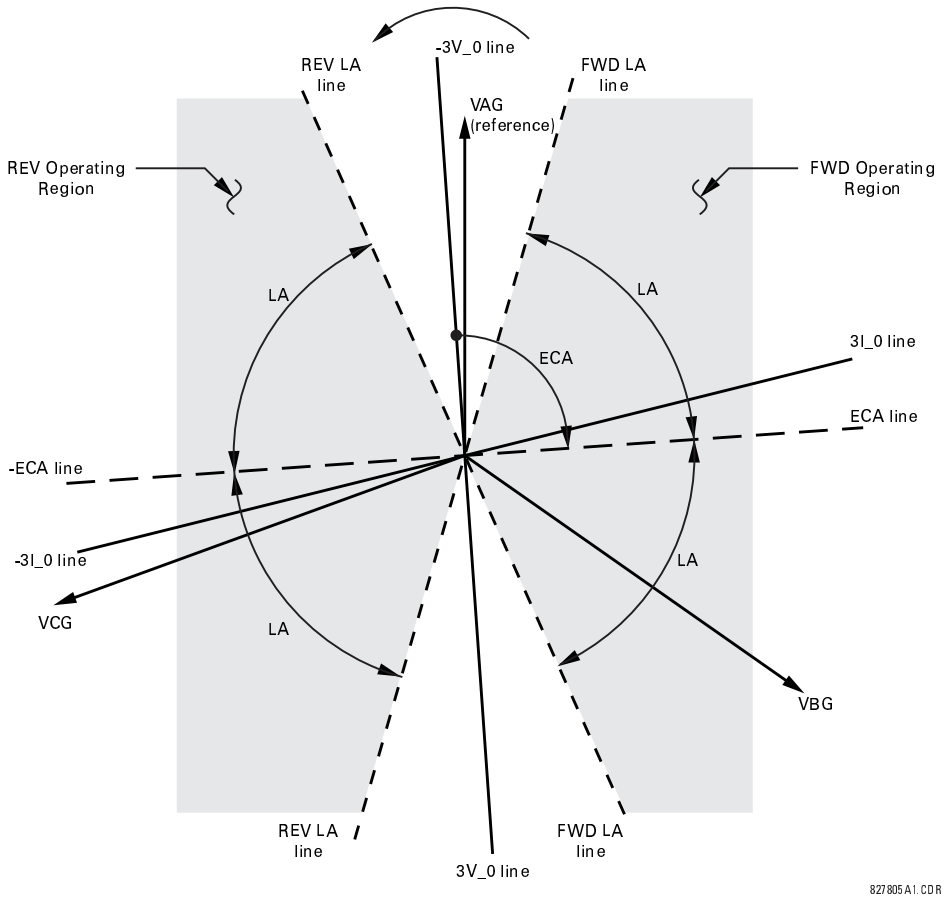

Figure 296: Neutral directional voltage-polarized characteristic

NEUTRAL DIR OC1 POLARIZING

This setting selects the polarizing mode for the directional unit.

- If Voltage polarizing is selected, the element uses the zero-sequence voltage angle for polarization. The user can use either the zero-sequence voltage V_0 calculated from the phase voltages, or the zero-sequence voltage supplied externally as the auxiliary voltage V_X, both from the ***NEUTRAL DIR OC1 SOURCE***. The calculated V_0 can be used as polarizing voltage only if the voltage transformers are connected in Wye. The auxiliary voltage can be used as the polarizing voltage provided ***SYSTEM SETUP > AC INPUTS > VOLTAGE BANK > AUXILIARY VT CONNECTION*** is set to `Vn` and the auxiliary voltage is connected to a zero-sequence voltage source (such as broken delta connected secondary of VTs). The zero sequence voltage V_0 must be greater than ***PRODUCT SETUP > DISPLAY PROPERTIES > VOLTAGE CUT-OFF LEVEL*** to be validated for use as polarizing signal. Additionally, when offset impedance is applied and zero-sequence current is above 0.2 pu, compensated zero-sequence voltage -V_0 + Z_offset x I_0 must be above 0.02 pu in order to discriminate fault direction; otherwise when zero-sequence current is less than 0.2 pu, -V_0 is then used as the polarizing signal. If the polarizing signal is invalid, neither forward nor reverse indication is given.
- If Current polarizing is selected, the element uses the ground current angle connected externally and configured under ***NEUTRAL OC1 SOURCE*** for polarization. The ground CT must be connected between the ground and neutral point of an adequate local source of ground current. The ground current must be greater than ***PRODUCT SETUP > DISPLAY PROPERTIES > CURRENT CUT-OFF LEVEL*** to be validated as a polarizing signal. If the polarizing signal is not valid, neither forward nor reverse indication is given. In addition, the zero-sequence current (I_0) must be greater than the ***PRODUCT SETUP > DISPLAY PROPERTIES > CURRENT CUT-OFF LEVEL*** setting value. For a choice of current polarizing, it is recommended that the polarizing signal be analyzed to ensure that a known direction is maintained irrespective of the fault location. For example, if using an autotransformer neutral current as a polarizing source, ensure that a reversal of the ground current does not occur for a high-side fault. Assume that the low-

side system impedance is minimal when checking for this condition. A similar situation arises for a wye/delta/wye transformer, where current in one transformer winding neutral can reverse when faults on both sides of the transformer are considered.

- If Dual polarizing is selected, the element performs both directional comparisons as described. A given direction is confirmed if either voltage or current comparators indicate so. If a conflicting (simultaneous forward and reverse) indication occurs, the forward direction overrides the reverse direction.
- If Dual-V polarizing is selected, Voltage polarizing is performed and Current polarizing is ignored if the voltage polarizing signal is valid; otherwise Current polarizing is performed if the current polarizing signal is valid. If neither of them is valid, neither forward nor reverse indication is given.
- If Dual-I polarizing is selected, Current polarizing is performed and Voltage polarizing is ignored if the current polarizing signal is valid; otherwise Voltage polarizing is performed if the voltage polarizing signal is valid. If neither of them is valid, neither forward nor reverse indication is given.

NEUTRAL DIR OC1 POL VOLT

Selects the polarizing voltage used by the directional unit when "Voltage," "Dual," "Dual-V," or "Dual-I" polarizing mode is set. The polarizing voltage can be programmed to be either the zero-sequence voltage calculated from the phase voltages ("Calculated V0") or supplied externally as an auxiliary voltage ("Measured VX").

NEUTRAL DIR OC1 OP CURR

This setting indicates whether the 3I_0 current calculated from the phase currents, or the ground current is used by this protection. This setting acts as a switch between the neutral and ground modes of operation (ANSI devices 67N and 67G). If set to `Calculated 3I0`, the element uses the phase currents and applies the positive-sequence restraint. If set to `Measured IG`, the element uses ground current supplied to the ground CT of the CT bank configured as ***NEUTRAL DIR OC1 SOURCE***. If this setting is `Measured IG`, then the ***NEUTRAL DIR OC1 POLARIZING*** setting must be `Voltage`, as it is not possible to use the ground current as an operating and polarizing signal simultaneously. IG current has to be above ***PRODUCT SETUP > DISPLAY PROPERTIES > CURRENT CUT-OFF LEVEL*** to be used as an operate quantity.

NEUTRAL DIR OC1 POS-SEQ RESTRAINT

This setting controls the amount of the positive-sequence restraint. Set it to 0.063 for backward compatibility with firmware revision 3.40 and older. Set it to zero to remove the restraint. Set it higher if large system unbalances or poor CT performance are expected.

NEUTRAL DIR OC1 OFFSET

This setting specifies the offset impedance used by this protection. The primary application for the offset impedance is to guarantee correct identification of fault direction on series compensated lines. In regular applications, the offset impedance ensures proper operation even if the zero-sequence voltage at the relaying point is very small. If this is the intent, the offset impedance is not to be larger than the zero-sequence impedance of the protected circuit. Practically, it shall be several times smaller. Enter the offset impedance in secondary ohms.

NEUTRAL DIR OC1 FWD ECA

This setting defines the characteristic angle (ECA) for the forward direction in the Voltage polarizing mode. The Current polarizing mode uses a fixed ECA of 0°. The ECA in the reverse direction is the angle set for the forward direction shifted by 180°.

NEUTRAL DIR OC1 FWD LIMIT ANGLE

This setting defines a symmetrical (in both directions from the ECA) limit angle for the forward direction.

NEUTRAL DIR OC1 FWD PICKUP

This setting defines the pickup level for the overcurrent unit of the element in the forward direction. When selecting this setting, keep in mind that the design uses a positive-sequence restraint technique for the `Calculated 3I0` mode of operation.

NEUTRAL DIR OC1 REV LIMIT ANGLE

This setting defines a symmetrical (in both directions from the ECA) limit angle for the reverse direction.

NEUTRAL DIR OC1 REV PICKUP

This setting defines the pickup level for the overcurrent unit of the element in the reverse direction. When selecting this setting, keep in mind that the design uses a positive-sequence restraint technique for the `Calculated 3I0` mode of operation.

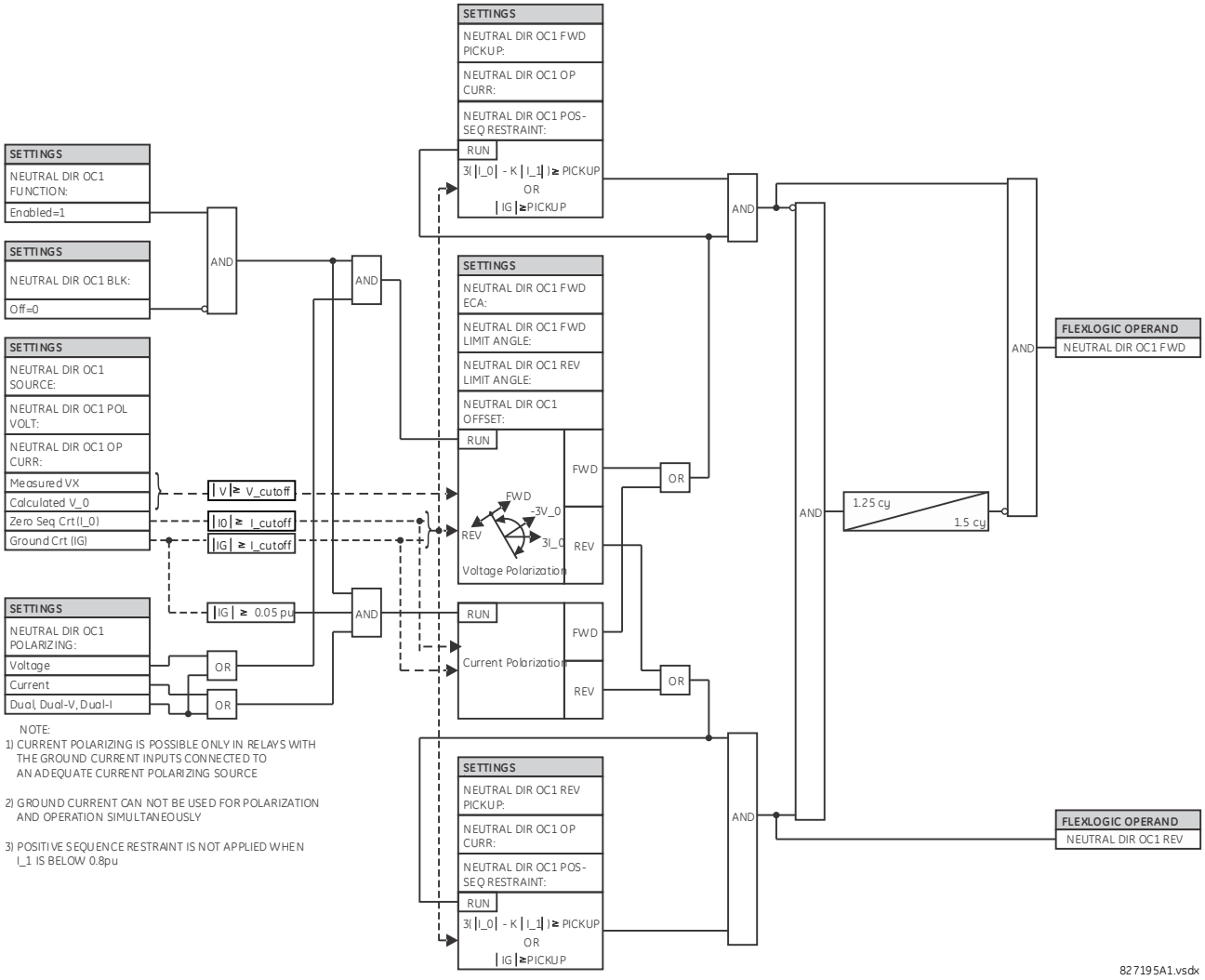

Figure 297: Neutral directional overcurrent logic

9.7.7.4 TRANSIENT GROUND FAULT DETECTION

SETTINGS > GROUPED ELEMENTS > SETTING GROUP 1(6) > NEUTRAL CURRENT > TRANS GND FLT <n>

Note:
Only Trans Gnd Flt 1 is shown

■ TRANS GND FLT 1 ■	⇔	TRANSIENT GND FLT 1 FUNCTION: Disabled	Range: Disabled, Enabled
	⇕	TRANSIENT GND FLT 1 SOURCE: SRC 1	Range: SRC <n>
	⇕	TRANSIENT GND FLT 1 VOLT: Measured VX	Range: Calculated VN, Measured VX
	⇕	TRANSIENT GND FLT 1 AMP: Measured IG	Range: Calculated IN, Measured IG
	⇕	TRANSIENT GND FLT 1 PWR THLD: 3.0	Range: 0.0 to 100.0 W in steps of 0.01
	⇕	TRANSIENT GND FLT 1 VOLT PKP: 0.10	Range: 0.00 to 1.50 pu in steps of 0.01
	⇕	TRANSIENT GND FLT 1 BLOCK: Off	Range: FlexLogic operand
	⇕	TRANSIENT GND FLT 1 TARGET: Self-reset	Range: Self-reset, Latched, Disabled
	⇧	TRANSIENT GND FLT 1 EVENTS: Disabled	Range: Disabled, Enabled

For a solid single phase to ground fault in an ungrounded three-phase system, the voltage of the faulted phase becomes equal to the earth potential (zero) while that of healthy phases become √3 times the nominal value. The fault current in ungrounded systems is equal to the sum of the charging currents drawn by the healthy phases, which is three times the normal charging current. The higher charging current can lead to arcing at the fault point and this arcing might not be self-extinguishing due to significant amount of fault (charging) current. Therefore, Petersen's coil, which is an inductive coil, is placed in the neutral of the three-phase system to compensate for the capacitive charging currents, which in turn reduces or eliminates the fault current.

Depending on the level of compensation of the Petersen's coil, three conditions can arise:

- Over compensation (inductive fault current)
- Under (capacitive fault current) compensation
- Resonant compensation (no fault current)

The figure shows an ungrounded system. The zero-sequence current in the healthy feeder the current is capacitive in nature, while the zero-sequence current in faulted phase is inductive in nature. This observation can be utilized to identify and isolate the faulty feeder in ungrounded systems.

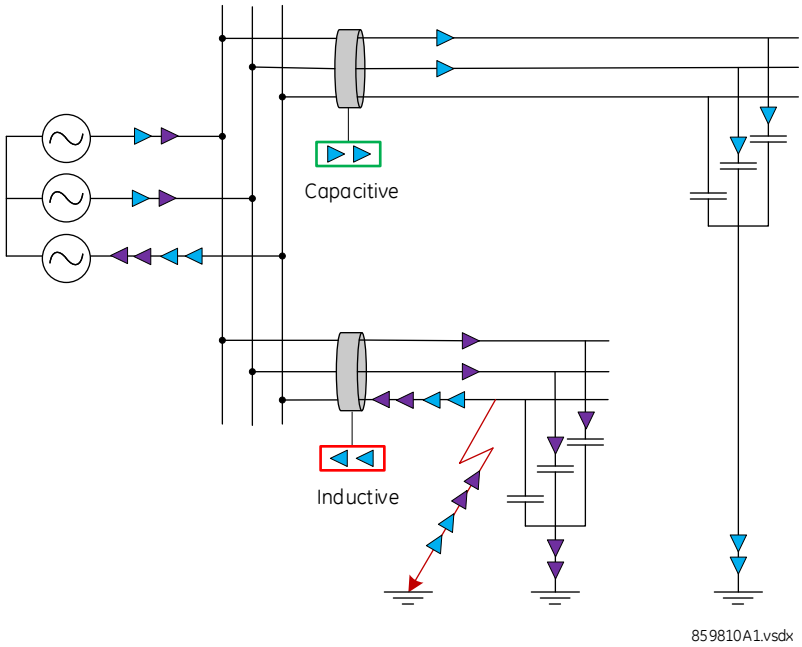

Figure 298: Single-phase to ground fault in ungrounded system

However, in the case of Petersen's coil grounded system, zero-sequence current of a faulty feeder can become capacitive, inductive, resistive, or altogether disappear, depending upon the level of compensation, the charging current of the system, or the fault impedance. For example, the next figure shows the single-phase to ground fault in Petersen's coil grounded network with 100% compensation (resonant compensation). It can be observed that all of the charging current is supplied via neutral of the compensated system, thus making the current at the fault point equal to 0. Consequently, the zero-sequence current of the faulty feeder like a healthy feeder also becomes capacitive in nature. Thus, the standard directional protection cannot be applied to systems grounded through Petersen coil.

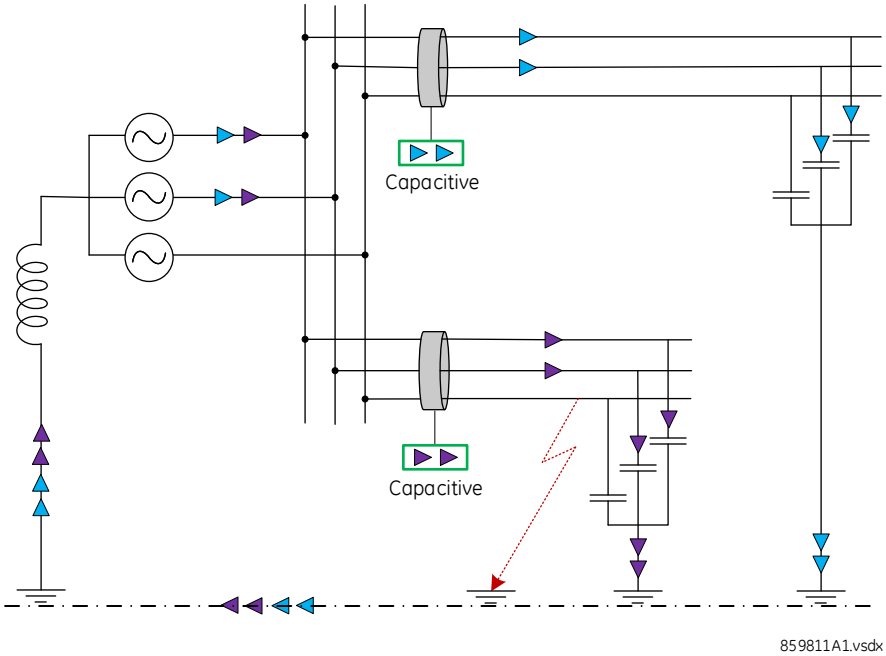

Figure 299: Single-phase to ground fault in Petersen coil grounded system with 100% compensation

To overcome this challenge, a patented algorithm is used, which does not require special hardware or high acquisition frequency, to precisely determine the fault direction. The algorithm utilizes the concept of transient

reactive power to identify the direction of the fault. The algorithm also applies to high-resistive grounded and ungrounded systems. The technique involves the application of band pass filters to measured residual voltage (V_N) and current signals (I_N). The center frequency of the band pass filters is 220 Hz and 264 Hz for nominal frequencies of 50 and 60 Hz respectively. Band pass filters remove the fundamental frequency component and introduce a 90° shift in anti-clockwise direction in the voltage signal. The outputs of voltage and current band pass filters are denoted by V'_N and I'_N respectively. The transient reactive power is obtained by multiplying V'_N and I'_N.

If the feeder has a fault, the circuit is inductive in the frequency range of the interest. Consequently, the transient reactive power is negative as V'_N. and I'_N are in phase opposition (figure a). On the other hand, if the feeder is healthy the circuit is capacitive in nature, thereby making the transient reactive power positive (figure b). Note that the phasors shown in the figure represent the voltage and current relationship surrounding the frequencies 220 Hz and 264 Hz for 50 and 60 Hz systems respectively.

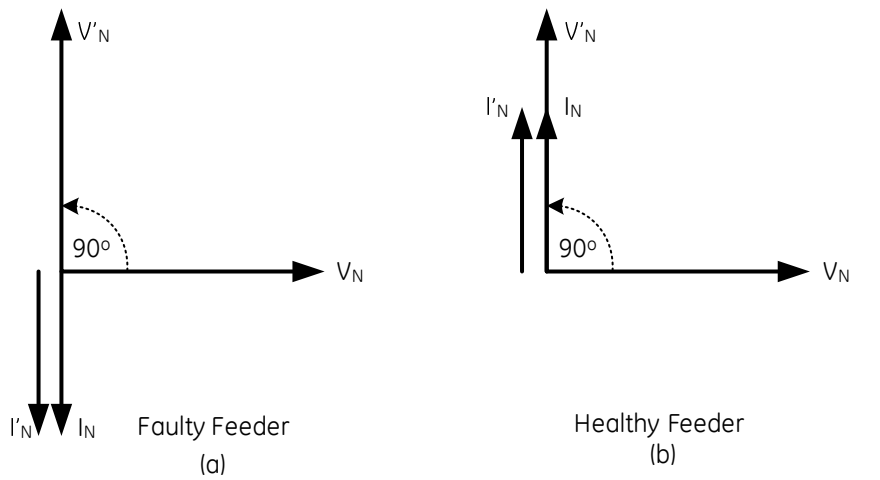

Figure shows the phase relationship of the frequency components of V_N, I_N, V'_N, and I'_N in the region surrounding 220 Hz in 50 Hz system or 264 Hz for 60 Hz system

859799A1.vsdx

Figure 300: Transient ground fault

Similarly, the decision about the direction of the fault can also be made using transient active power. In case the minimum threshold of transient reactive power is not met, the direction of the fault can be identified using transient active power.

TRANSIENT GND FLT 1 FUNCTION

This setting enables and disables the Transient Ground Fault Detection function.

TRANSIENT GND FLT 1 SOURCE

This setting selects the signal source for Transient Ground Fault Detection function.

TRANSIENT GND FLT 1 VOLT

The element uses neutral voltage (that is, three times the zero-sequence voltage). This setting allows selecting between the internally calculated neutral voltage or the externally supplied voltage (broken delta VT connected to the auxiliary channel bank of the relay). When the latter selection is made, the auxiliary channel must be identified by the user as a neutral voltage under the VT bank settings. This element operates when the auxiliary voltage is configured as neutral.

TRANSIENT GND FLT 1 AMP

The element responds to the neutral current (that is, three times zero-sequence current), either calculated internally from the phase currents or supplied externally via the ground CT input from more accurate sources such as the core balanced CT. This setting allows selecting the source of the operating current.

TRANSIENT GND FLT 1 PWR THLD

This setting is used to calculate dynamic power threshold which in turn is used to determine residual fault direction. Increasing the value of this setting increases the security and decreases the sensitivity of the element. The minimum value that can be applied to this setting to avoid overlap with "small P/Q" area is 3 W. As shown in the next figure, "small P/Q" area refers to the condition when the calculated transient reactive or active power is small enough to introduce ambiguity in sensing the direction of the fault. This setting is given in secondary value.

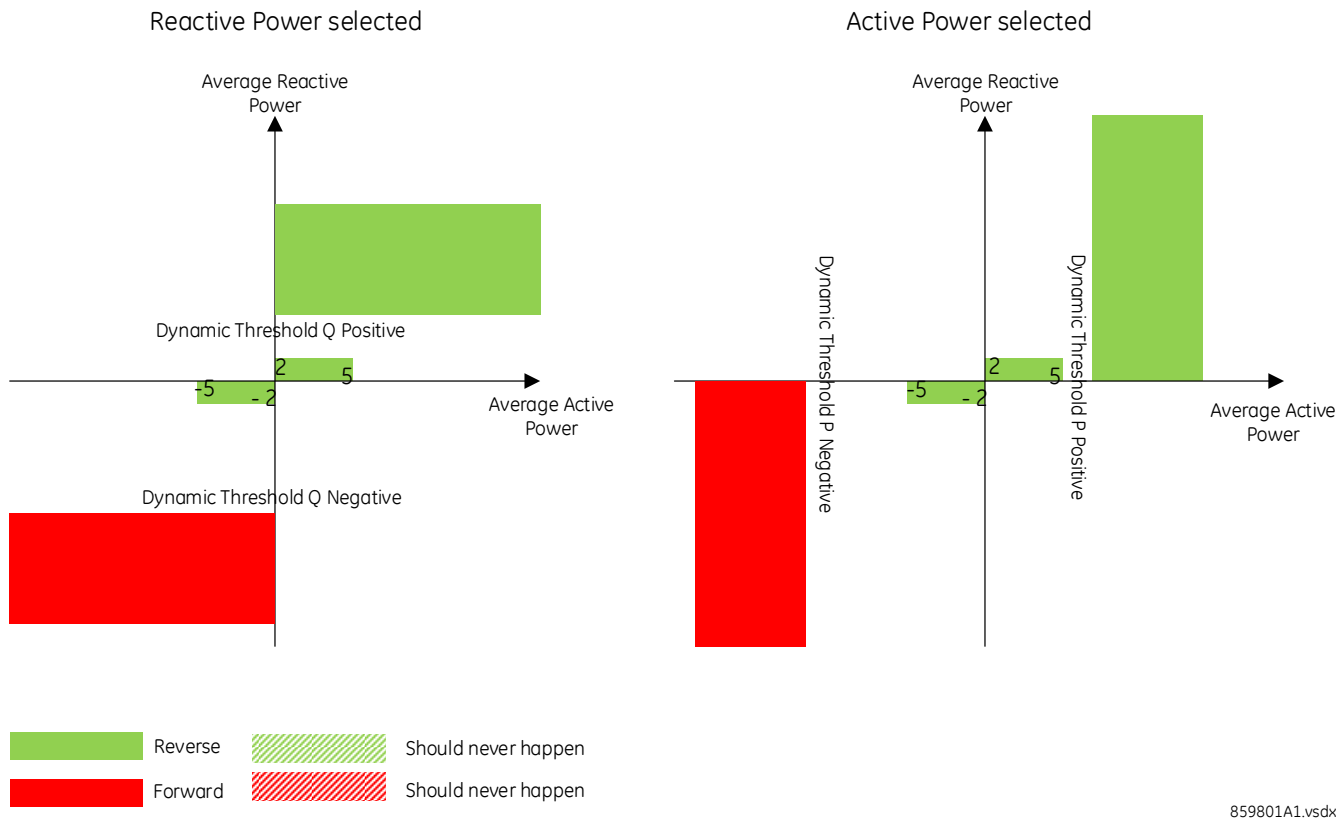

Figure 301: Transient ground fault power threshold

TRANSIENT GND FLT 1 VOLT PKP

Voltage pickup threshold that is used to determine if Transient Ground Fault Detection element starts or not. If the measured neutral voltage is above this setting the element Transient Ground Fault Detection starts. Typical value of this setting is 0.10 pu.

TRANSIENT GND FLT 1 BLOCK

Assertion of the FlexLogic operand assigned to this setting blocks operation of Transient Ground Fault Detection element.

TRANSIENT GND FLT 1 EVENTS

This setting enables and disables the logging of Transient Ground Fault Detection events in the event recorder.

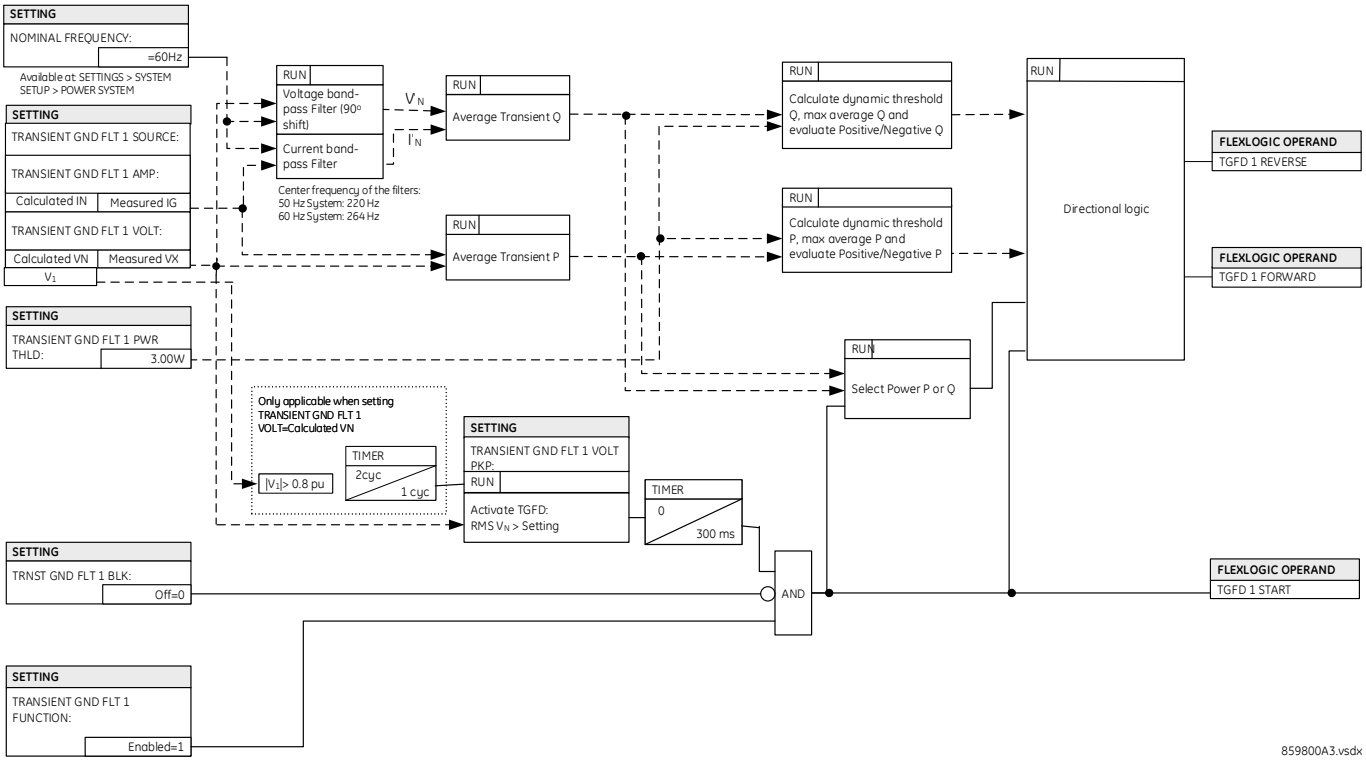

Figure 302: Transient ground fault detection logic

9.7.8 WATTMETRIC GROUND FAULT

9.7.8.1 WATTMETRIC ZERO-SEQUENCE DIRECTIONAL (ANSI 32N, IEC PSDE)

SETTINGS > GROUPED ELEMENTS > SETTING GROUP 1(6) > WATTMETRIC > WATTMETRIC GROUND FAULT <n>

> *Note:*
> *Only Wattmetric Ground Fault 1 is shown*

■ WATTMETRIC ■ GROUND FAULT 1	⇔	WATTMETRIC GND FLT 1 FUNCTION: Disabled	Range: Disabled, Enabled
	⇕	WATTMETRIC GND FLT 1 SOURCE: SRC 1	Range: SRC <n>
	⇕	WATTMETRIC GND FLT 1 VOLT: Calculated VN	Range: Calculated VN, Measured VX
	⇕	WATTMETRIC GND FLT 1 OV PKP: 0.20 pu	Range: 0.02 to 3.00 pu in steps of 0.01
	⇕	WATTMETRIC GND FLT 1 CURR: Calculated IN	Range: Calculated IN, Measured IG
	⇕	WATTMETRIC GND FLT 1 OC PKP: 0.060 pu	Range: 0.002 to 30.000 pu in steps of 0.001
	⇕	WATTMETRIC GND FLT 1 OC PKP DEL: 0.20 s	Range: 0.00 to 600.00 s in steps of 0.01

⇕	WATTMETRIC GND FLT 1 PWR PKP: 0.100 pu	Range: 0.001 to 1.200 pu in steps of 0.001
⇕	WATTMETRIC GND FLT 1 REF PWR: 0.500 pu	Range: 0.001 to 1.200 pu in steps of 0.001
⇕	WATTMETRIC GND FLT 1 ECA: 0° Lag	Range: 0 to 360° Lag in steps of 1
⇕	WATTMETRIC GND FLT 1 PWR PKP DEL: 0.20 s	Range: 0.00 to 600.00 s in steps of 0.01
⇕	WATTMETRIC GND FLT 1 CURVE: Definite Time	Range: Definite Time, Inverse, FlexCurves A through D
⇕	WATTMETRIC GND FLT 1 MULTIPLIER: 1.00 s	Range: 0.01 to 2.00 s in steps of 0.01
⇕	WATT GND FLT 1 BLK: Off	Range: FlexLogic operand
⇕	WATTMETRIC GND FLT 1 TARGET: Self-reset	Range: Self-reset, Latched, Disabled
⇧	WATTMETRIC GND FLT 1 EVENTS: Disabled	Range: Disabled, Enabled

The wattmetric zero-sequence directional element responds to power derived from zero-sequence voltage and current in a direction specified by the element characteristic angle. The angle can be set within all four quadrants, and the power can be active or reactive. Therefore, the element can be used to sense either forward or reverse ground faults in either inductive, capacitive, or resistive networks. The inverse time characteristic allows time coordination of elements across the network.

Typical applications include ground fault protection in solidly grounded transmission networks, grounded/ungrounded/resistor-grounded/resonant-grounded distribution networks, or for directionalizing other non-directional ground elements.

WATTMETRIC GND FLT 1 VOLT

The element uses neutral voltage (that is, three times the zero-sequence voltage). This setting allows selecting between the internally calculated neutral voltage or the externally supplied voltage (broken delta VT connected to the auxiliary channel bank of the relay). When the latter selection is made, the auxiliary channel must be identified by the user as a neutral voltage under the VT bank settings. This element operates when the auxiliary voltage is configured as neutral.

WATTMETRIC GND FLT 1 OV PKP

This setting specifies the minimum zero sequence voltage supervising the directional power measurement. Set this threshold higher than possible unbalance during normal operation of the system. Typically, this setting is at 0.1 to 0.2 pu for the ungrounded or resonant grounded systems and at 0.05 to 0.1 pu for solidly or resistor-grounded systems. When using externally supplied voltage via the auxiliary voltage channel, 1 pu is the nominal voltage of this channel as per VT bank settings. When using internally calculated neutral voltage, 1 pu is the nominal phase to ground voltage as per the VT bank settings.

WATTMETRIC GND FLT 1 CURR

The element responds to the neutral current (that is, three times zero-sequence current), either calculated internally from the phase currents or supplied externally via the ground CT input from more accurate sources such as the core balanced CT. This setting allows selecting the source of the operating current.

WATTMETRIC GND FLT 1 OC PKP

This setting specifies the current supervision level for the measurement of the zero-sequence power.

WATTMETRIC GND FLT 1 OC PKP DEL

This setting specifies delay for the overcurrent portion of this element. The delay applies to the WATTMETRIC 1 PKP operand driven from the overcurrent condition.

WATTMETRIC GND FLT 1 PWR PKP

This setting specifies the operating point of the element. A value of 1 pu is a product of the 1 pu voltage as specified for the overvoltage condition of this element, and 1 pu current as specified for the overcurrent condition of this element.

WATTMETRIC GND FLT 1 REF PWR

This setting is used to calculate the inverse time characteristic delay (defined by Sref in the following equations). A value of 1 pu represents the product of a 1 pu voltage (as specified in the overvoltage condition for this element) and a 1 pu current (as specified in the overcurrent condition for this element.

WATTMETRIC GND FLT 1 ECA

This setting adjusts the maximum torque angle of the element. The operating power is calculated as:

$$S_op = Re(V_n(I_n \times 1\angle ECA)^*)$$

where

- * indicates complex conjugate

By varying the element characteristic angle (ECA), the element can be made to respond to forward or reverse direction in inductive, resistive, or capacitive networks as shown in the Wattmetric Characteristic Angle Response diagram.

WATTMETRIC GND FLT 1 PWR PKP DEL

This setting defines a definite time delay before the inverse time characteristic is activated. If the curve selection is set as `Definite Time`, the element operates after this security time delay. If the curve selection is `Inverse` or one of the FlexCurves, the element uses both the definite and inverse time timers simultaneously. The definite time timer, specified by this setting, is used and when expires it releases the inverse time timer for operation (torque control).

WATTMETRIC GND FLT 1 CURVE

Choose one of three methods to delay the operate signal once all conditions are met to discriminate fault direction.

The `Definite Time` selection allows for a fixed time delay defined by the ***WATTMETRIC GND FLT 1 PWR PKP DEL*** setting.

The `Inverse` selection allows for inverse time characteristics delay defined by the following formula:

$$t = m \times S_{ref}/S_{op}$$

where:

- m is a multiplier defined by the multiplier setting
- Sref is the multiplier setting
- Sop is the operating power at the time

This timer starts after the definite time timer expires.

The four FlexCurves allow for custom user-programmable time characteristics. When working with FlexCurves, the element uses the operate to pickup ratio, and the multiplier setting is not applied:

$$t = FlexCurve(S_{op}/S_{ref})$$

Again, the FlexCurve timer starts after the definite time timer expires.

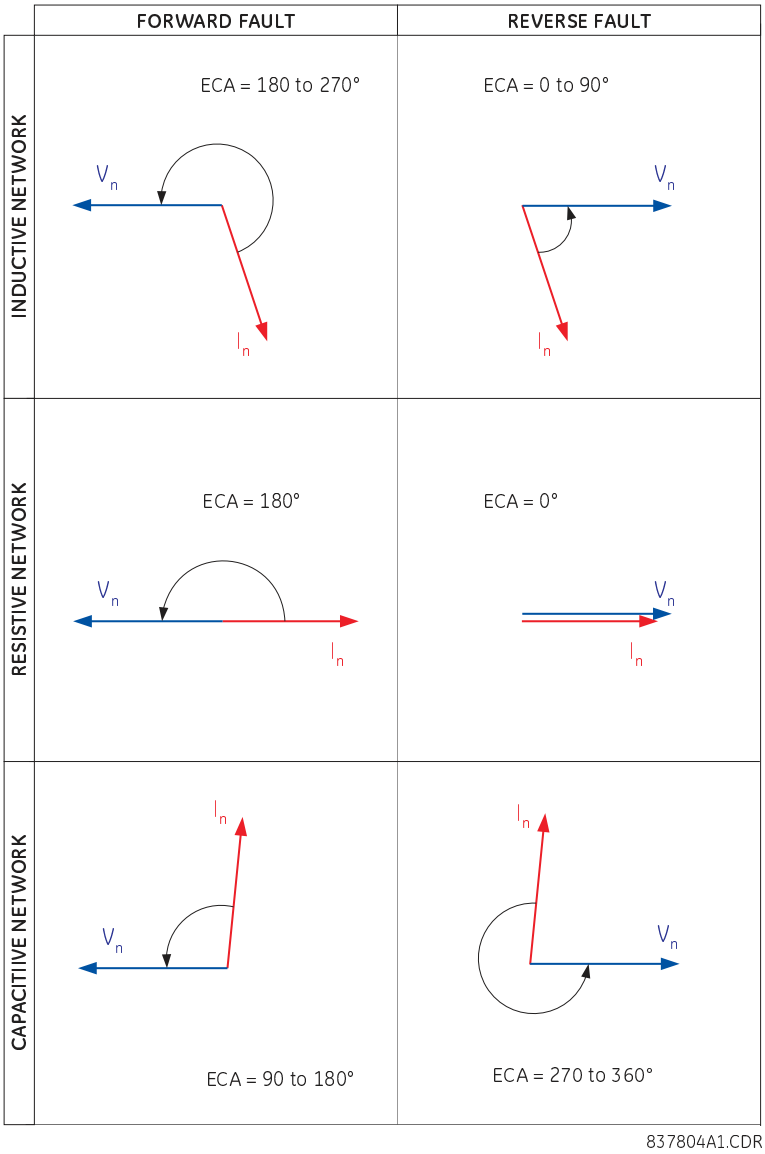

Figure 303: Wattmetric characteristic angle response

WATTMETRIC GND FLT 1 MULTIPLIER

This setting is applicable if the ***WATTMETRIC GND FLT 1 CURVE*** is set to Inverse and defines the multiplier factor for the inverse time delay.

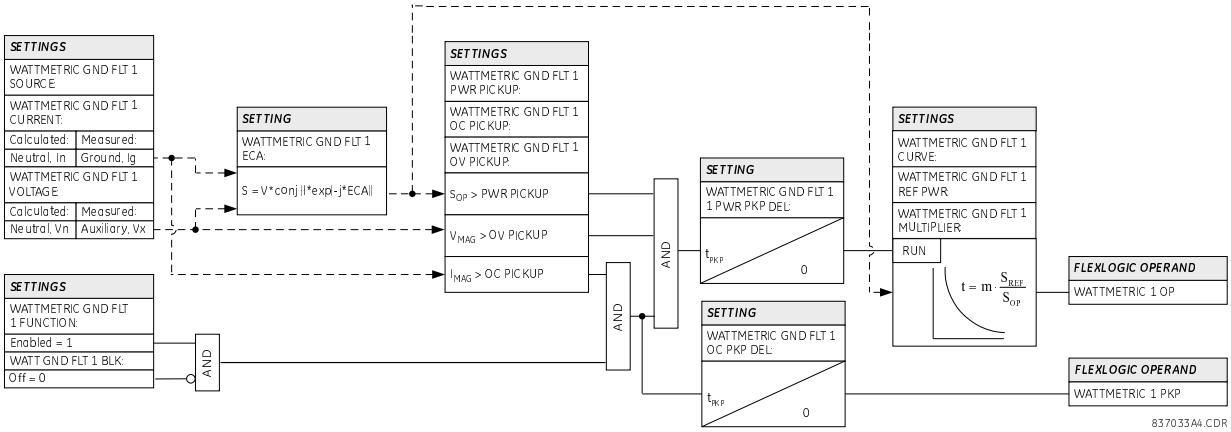

Figure 304: Wattmetric zero-sequence directional logic

9.7.9 GROUND CURRENT

SETTINGS > GROUPED ELEMENTS > SETTING GROUP 1(6) > GROUND CURRENT

■ GROUND CURRENT ■	⇔	■ GROUND TOC <n> ■	NOT ALL UR MODELS
	⇧	■ GROUND IOC <n> ■	NOT ALL UR MODELS

Note:
n = number of elements

9.7.9.1 GROUND TIME OVERCURRENT (ANSI 51G, IEC PTOC)

SETTINGS > GROUPED ELEMENTS > SETTING GROUP 1(6) > GROUND CURRENT >GROUND TOC 1(4)

Note:
Only Ground TOC 1 is shown

■ GROUND TOC 1 ■	⇔	GROUND TOC 1 FUNCTION: Disabled	Range: Disabled, Enabled
	⇧	GROUND TOC 1 SIGNAL SOURCE: SRC 1	Range: SRC <n> Not applicable to relays with 9-2LE
	⇧	GROUND TOC 1 INPUT: Phasor	Range: Phasor, RMS
	⇧	GROUND TOC1 PICKUP: 1.000 pu	Range:0.020 to 30.000 pu in steps of 0.001
	⇧	GROUND TOC1 CURVE: IEEE Mod Inv	Range: see Overcurrent Curve Types table
	⇧	GROUND TOC1 TD MULTIPLIER: 1.00	Range: 0.00 to 600.00 in steps of 0.01
	⇧	GROUND TOC1 RESET: Instantaneous	Range: Instantaneous, Timed

⇕	GROUND TOC1 BLOCK: Off	Range: FlexLogic operand
⇕	GROUND TOC1 TARGET: Self-reset	Range: Self-reset, Latched, Disabled Not applicable to relays with 9-2LE
⇧	GROUND TOC1 EVENTS: Disabled	Range: Disabled, Enabled Not applicable to relays with 9-2LE

This element can provide a required time-delay operating characteristic versus the applied current or be used as a simple definite time element. The ground current input value is the quantity measured by the ground input CT and is the fundamental phasor or RMS magnitude. Two methods of resetting operation are available: `Timed` and `Instantaneous` (see the Inverse TOC Curve Characteristics section for details). When the element is blocked, the time accumulator resets according to the reset characteristic. For example, if the element reset characteristic is set to `Instantaneous` and the element is blocked, the time accumulator clears immediately.

GROUND TOC1 FUNCTION

This setting enables and disables the ground time overcurrent protection element.

GROUND TOC1 SIGNAL SOURCE

This setting selects the signal source for the ground time overcurrent protection element.

GROUND TOC1 INPUT

This setting selects how ground current input quantities are interpreted by the Product. Inputs can be selected as fundamental phasor magnitudes or total waveform RMS magnitudes as required by the application.

GROUND TOC1 PICKUP

This setting specifies the ground time overcurrent pickup level in per-unit values. With a Process Bus Module, accuracy of the element is determined by the sum of the relay internal processing errors and input signal from the merging unit errors, which can be significant depending on the merging unit design. For low level pickup settings, especially less than 0.020 pu with a Process Bus Module, ensure that the selected merging unit meets given application accuracy requirements.

GROUND TOC1 CURVE

This setting selects the inverse time overcurrent curve style.

GROUND TOC1 TD MULTIPLIER

This setting specifies a multiple of the base curve shape specified by the CURVE setting. Programming this value to zero results in an instantaneous response to all current levels above pickup.

GROUND TOC1 RESET

The Instantaneous reset method is intended for applications with other relays, such as most static relays, which set the energy capacity directly to zero when the current falls below the reset threshold. The “Timed” reset method can be used where the relay must coordinate with electromechanical relays.

GROUND TOC1 BLOCK

Assertion of the operand assigned to this setting blocks operation of the ground time overcurrent element.

Note:
These elements measure the current that is connected to the ground channel of a CT/VT module. The conversion range of a standard channel is from 0.02 to 46 times the CT rating.

Note:
This channel can be also equipped with a sensitive input. The conversion range of a sensitive channel is from 0.002 to 4.6 times the CT rating.

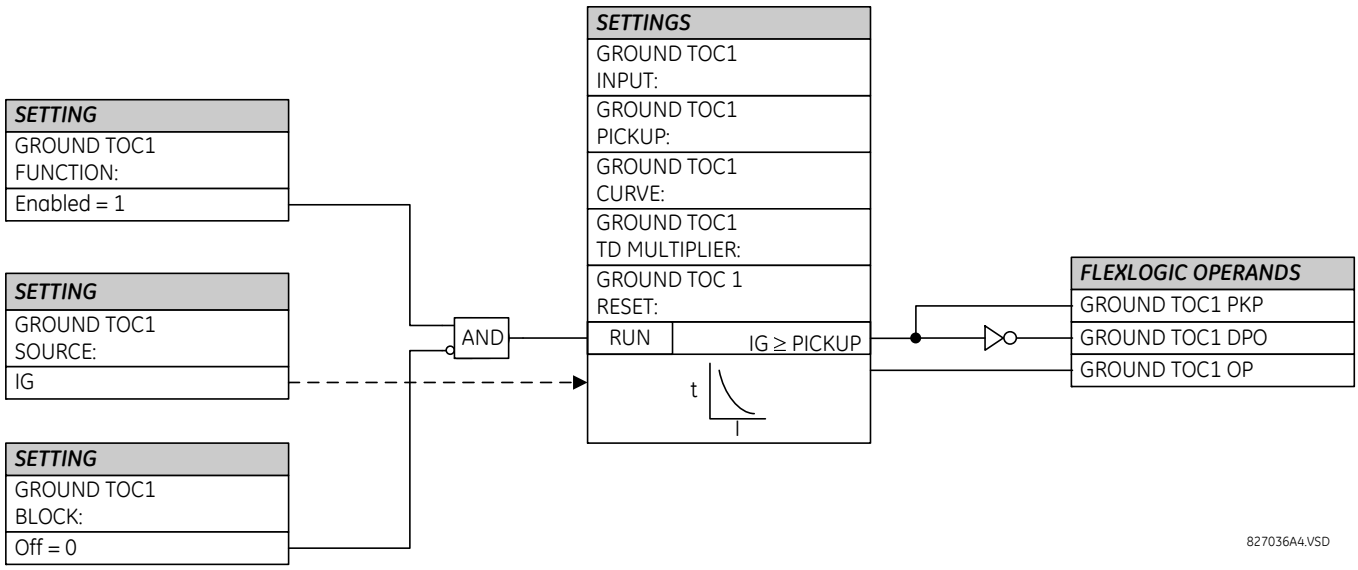

Figure 305: Ground TOC logic

9.7.9.2 GROUND INSTANTANEOUS OVERCURRENT (ANSI 50G, IEC PIOC)

SETTINGS > GROUPED ELEMENTS > SETTING GROUP 1(6) > GROUND CURRENT >GROUND IOC 1(8)

Note:
Only Ground IOC 1 is shown

■ GROUND IOC 1 ■	⇔ GROUND IOC 1 FUNCTION: Disabled	Range: Disabled, Enabled
	⇕ GROUND IOC 1 SIGNAL SOURCE: SRC 1	Range: SRC <n> Not applicable to relays with 9-2LE
	⇕ GROUND IOC1 PICKUP: 1.000 pu	Range: 0.020 to 30.000 pu in steps of 0.001
	⇕ GROUND IOC1 PICKUP DELAY: 0.00 s	Range: 0.00 to 600.00 s in steps of 0.01
	⇕ GROUND IOC1 RESET DELAY : 0.00 s	Range: 0.00 to 600.00 in steps of 0.01
	⇕ GROUND IOC1 BLOCK: Off	Range: FlexLogic operand
	⇕ GROUND IOC1 TARGET: Self-reset	Range: Self-reset, Latched, Disabled Not applicable to relays with 9-2LE
	⇑ GROUND IOC1 EVENTS: Disabled	Range: Disabled, Enabled Not applicable to relays with 9-2LE

The ground instantaneous overcurrent element can be used as an instantaneous element with no intentional delay or as a definite time element. The ground current input is the quantity measured by the ground input CT and is the fundamental phasor magnitude.

GROUND IOC1 FUNCTION

This setting enables and disables the element.

GROUND IOC1 SIGNAL SOURCE

This setting selects the signal source for the element.

GROUND IOC1 PICKUP

This setting specifies the pickup level in per-unit values. With a Process Bus Module, accuracy of the element is determined by the sum of the relay internal processing errors and input signal from the merging unit errors, which can be significant depending on the merging unit design. For low level pickup settings, especially less than 0.020 pu with a Process Bus Module, ensure that the selected merging unit meets the given application accuracy requirements.

GROUND IOC1 PICKUP DELAY

This setting specifies the definite time delay after which the operate signal asserts.

GROUND IOC1 RESET DELAY

This setting specifies the reset time delay.

GROUND IOC1 BLOCK

Assertion of the operand assigned to this setting blocks operation of the element.

These elements measure the current that is connected to the ground channel of a CT/VT module. The conversion range of a standard channel is from 0.02 to 46 times the CT rating.

This channel can be also equipped with a sensitive input. The conversion range of a sensitive channel is from 0.002 to 4.6 times the CT rating.

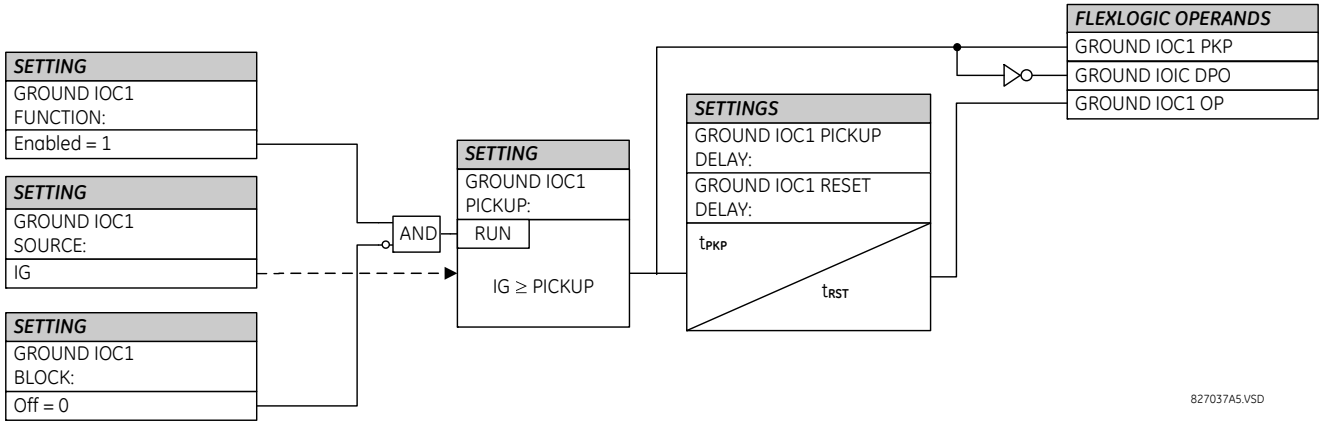

Figure 306: Ground IOC1 logic

9.7.10 NEGATIVE SEQUENCE CURRENT

SETTINGS > GROUPED ELEMENTS > SETTING GROUP 1(6) > NEGATIVE SEQUENCE CURRENT

■ NEGATIVE SEQUENCE ■ CURRENT	⇔	■ NEG SEQ TOC<n> ■
	⇕	■ NEG SEQ IOC<n> ■
	⇑	■ NEG SEQ DIR OC<n> ■

9.7.10.1 NEGATIVE SEQUENCE TIME OVERCURRENT (ANSI 51Q, IEC PTOC)

SETTINGS > GROUPED ELEMENTS > SETTING GROUP 1(6) > NEGATIVE SEQUENCE CURRENT > NEG SEQ TOC<n>

> *Note:*
> *Only Neg Seq TOC 1 is shown*

■ NEG SEQ TOC 1 ■	⇔	NEG SEQ TOC 1 FUNCTION: Disabled	Range: Disabled, Enabled
	⇕	NEG SEQ TOC 1 SIGNAL SOURCE: SRC 1	Range: SRC <n>
	⇕	NEG SEQ TOC1 PICKUP: 1.000 pu	Range:0.020 to 30.000 pu in steps of 0.001
	⇕	NEG SEQ TOC1 CURVE: IEEE Mod Inv	Range: see Overcurrent Curve Types table
	⇕	NEG SEQ TOC1 TD MULTIPLIER: 1.00	Range: 0.00 to 600.00 in steps of 0.01
	⇕	NEG SEQ TOC1 RESET: Instantaneous	Range: Instantaneous, Timed
	⇕	NEG SEQ TOC1 BLOCK: Off	Range: FlexLogic operand
	⇕	NEG SEQ TOC1 TARGET: Self-reset	Range: Self-reset, Latched, Disabled
	⇑	NEG SEQ TOC1 EVENTS: Disabled	Range: Disabled, Enabled

The negative-sequence time overcurrent element can be used to determine and clear unbalance in the system. The input for calculating negative-sequence current is the fundamental phasor value.

Two methods of resetting operation are available; `Timed` and `Instantaneous` (see the Inverse TOC Curve Characteristics section earlier for details on curve setup, trip times and reset operation). When the element is blocked, the time accumulator resets according to the reset characteristic. For example, if the element reset characteristic is set to `Instantaneous` and the element is blocked, the time accumulator clears immediately.

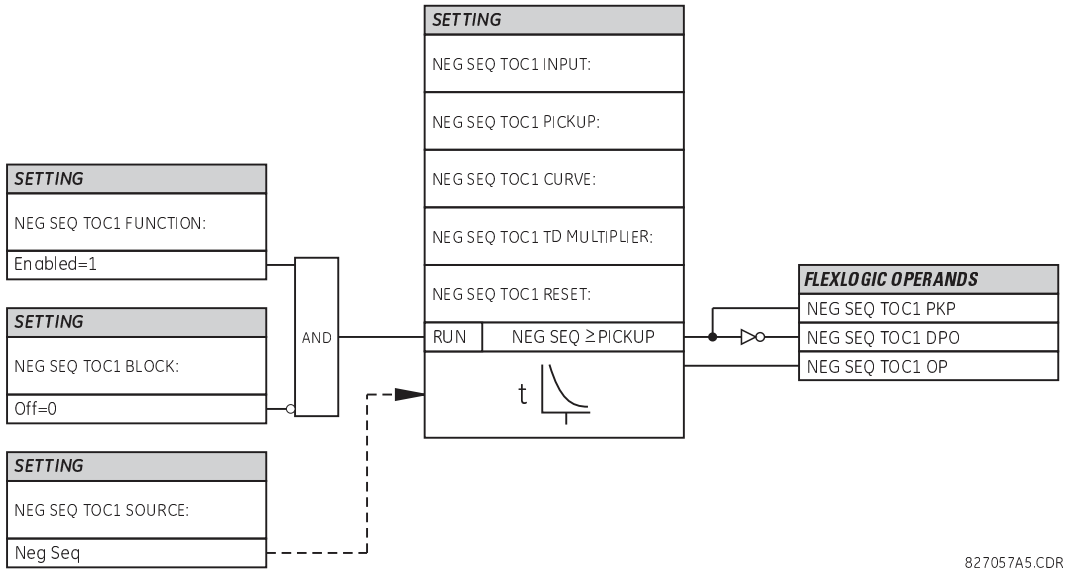

Figure 307: Negative sequence TOC1 logic

9.7.10.2 NEGATIVE SEQUENCE INSTANTANEOUS OVERCURRENT (ANSI 50Q, IEC PIOC)

SETTINGS > GROUPED ELEMENTS > SETTING GROUP 1(6) > NEGATIVE SEQUENCE CURRENT > NEG SEQ TOC<n>

> *Note:*
> *Only Neg Seq TOC 1 is shown*

■ NEG SEQ IOC 1 ■	⇔ NEG SEQ IOC 1 FUNCTION: Disabled	Range: Disabled, Enabled
	⇕ NEG SEQ IOC 1 SIGNAL SOURCE: SRC 1	Range: SRC <n>
	⇕ NEG SEQ IOC1 PICKUP: 1.000 pu	Range:0.020 to 30.000 pu in steps of 0.001
	⇕ NEG SEQ IOC1 PICKUP DELAY: 0.00 s	Range: 0.00 to 600.00 s in steps of 0.01
	⇕ NEG SEQ IOC1 RESET DELAY: 0.00 s	Range: 0.00 to 600.00 in steps of 0.01
	⇕ NEG SEQ IOC1 BLOCK: Off	Range: FlexLogic operand
	⇕ NEG SEQ IOC1 TARGET: Self-reset	Range: Self-reset, Latched, Disabled
	⇑ NEG SEQ IOC1 EVENTS: Disabled	Range: Disabled, Enabled

the negative-sequence instantaneous overcurrent element can be used as an instantaneous function with no intentional delay or as a definite time function. The element responds to the negative-sequence current fundamental frequency phasor magnitude (calculated from the phase currents) and applies a positive-sequence restraint for better performance: a small portion (12.5%) of the positive-sequence current magnitude is subtracted from the negative-sequence current magnitude when forming the operating quantity.

$$Iop = |I_2| - K \times |I_1| \text{ where } K = 1/8$$

The positive-sequence restraint allows for more sensitive settings by counterbalancing spurious negative-sequence currents resulting from

- System unbalances under heavy load conditions
- Transformation errors of current transformers (CTs) during three-phase faults
- Fault inception and switch-off transients during three-phase faults

The positive-sequence restraint must be considered when testing for pickup accuracy and response time (multiple of pickup). The operating quantity depends on how the test currents are injected into the relay (single-phase injection:

$$Iop = 0.2917 \times Iinjected; \text{ three-phase injection, opposite rotation: } Iop = Iinjected).$$

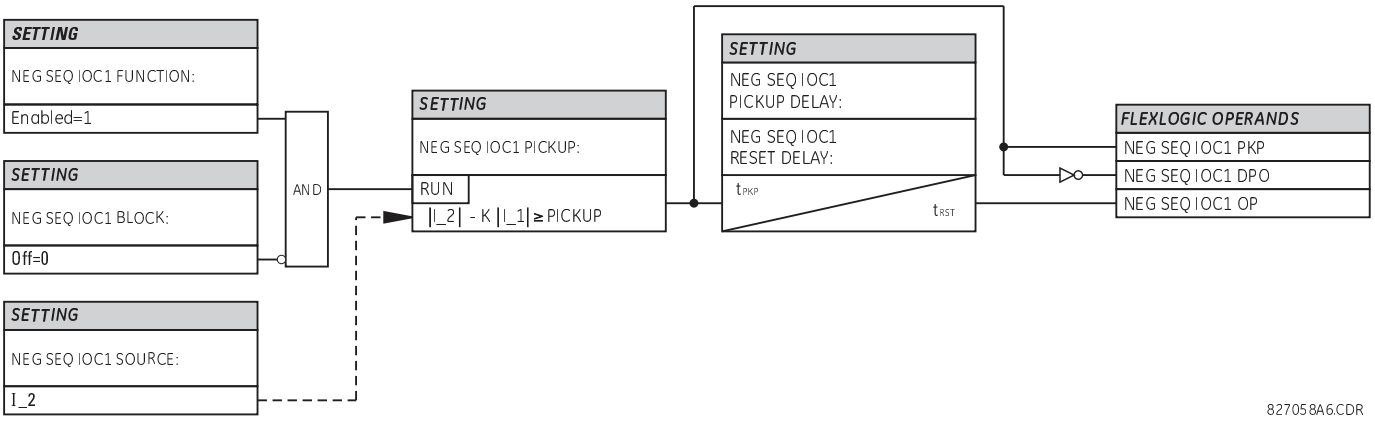

Figure 308: Negative sequence IOC1 logic

9.7.10.3 NEGATIVE SEQUENCE DIRECTIONAL OVERCURRENT (ANSI 67Q, IEC PDEF/ PTOC)

SETTINGS > GROUPED ELEMENTS > SETTING GROUP 1(6) > NEGATIVE SEQUENCE CURRENT > NEG SEQ DIR OC<n>

> *Note:*
> *Only Dir Seq OC 1 is shown*

■ NEG SEQ DIR OC1 ■	⇔	NEG SEQ DIR OC1 FUNCTION: Disabled	Range: Disabled, Enabled
	⇕	NEG SEQ DIR OC1 SOURCE: SRC 1	Range: SRC <n>
	⇕	NEG SEQ DIR OC1 OFFSET: 0.00 Ω	Range: 0.00 to 250.00 ohms in steps of 0.01
	⇕	NEG SEQ DIR OC1 TYPE: Neg Sequence	Range: Neg Sequence, Zero Sequence
	⇕	NEG SEQ DIR OC1 POSSEQ RESTRAINT: 0.063	Range: 0.000 to 0.500 in steps of 0.001
	⇕	NEG SEQ DIR OC1 FWD ECA: 75° Lag	Range: 0 to 90° Lag in steps of 1

⇕	NEG SEQ DIR OC1 FWD LIMIT ANGLE: 90°	Range: 40 to 90° in steps of 1
⇕	NEG SEQ DIR OC1 FWD PICKUP: 0.050 pu	Range: 0.015 to 30.000 pu in steps of 0.005
⇕	NEG SEQ DIR OC1 REV LIMIT ANGLE: 90°	Range: 40 to 90° in steps of 1
⇕	NEG SEQ DIR OC1 REV PICKUP: 0.050 pu	Range: 0.015 to 30.000 pu in steps of 0.005
⇕	NEG SEQ DIR OC1 BLK: Off	Range: FlexLogic operand
⇕	NEG SEQ DIR OC1 TARGET: Self-reset	Range: Self-reset, Latched, Disabled
⇧	NEG SEQ DIR OC1 EVENTS: Disabled	Range: Disabled, Enabled

There are two negative-sequence directional overcurrent protection elements available. The element provides both forward and reverse fault direction indications through its output operands NEG SEQ DIR OC1 FWD and NEG SEQ DIR OC1 REV, respectively. The output operand is asserted if the magnitude of the operating current is above a pickup level (overcurrent unit) and the fault direction is seen as forward or reverse, respectively (directional unit).

The overcurrent unit of the element essentially responds to the magnitude of a fundamental frequency phasor of either the negative-sequence or neutral current as per user selection.

A positive-sequence restraint is applied for better performance: a small user-programmable portion of the positive-sequence current magnitude is subtracted from the negative or zero-sequence current magnitude, respectively, when forming the element operating quantity.

$$Iop = |I_2| - K \times |I_1| \text{ or } Iop = 3 \times (|I_0| - K \times |I_1|)$$

The positive-sequence restraint allows for more sensitive settings by counterbalancing spurious negative-sequence and zero-sequence currents resulting from:

- System unbalances under heavy load conditions
- Transformation errors of current transformers (CTs)
- Fault inception and switch-off transients

The positive-sequence restraint must be considered when testing for pickup accuracy and response time (multiple of pickup). The positive-sequence restraint is removed for low currents. If the positive-sequence current is less than 0.8 pu, then the restraint is removed by changing the constant K to zero. This results in better response to high-resistance faults when the unbalance is very small and there is no danger of excessive CT errors, since the current is low.

The operating quantity depends on the way the test currents are injected into the Product. For single phase injection

$$I_{op} = ⅓ \times (1 – K) \times I_{injected} \text{ for I_2 mode}$$

$$I_{op} = (1 – K) \times I_{injected} \text{ for I_0 mode if I_1 > 0.8 pu}$$

The directional unit uses the negative-sequence current (I_2) and negative-sequence voltage (V_2).

The following tables define the negative-sequence directional overcurrent element.

Negative-sequence directional overcurrent unit

Mode	Operating current
Negative-sequence	Iop = |I_2| – K x I_1|
Zero-sequence	Iop = 3 x (|I_0| – K x |I_1|) if |I_1| > 0.8 pu Iop = 3 x |I_0| if |I_1| ≤ 0.8 pu

Negative-sequence directional unit

Direction	Compared phasors	
Forward	–V_2 + Z_offset × I_2	I_2 × 1∠ECA
Reverse	–V_2 + Z_offset × I_2	–(I_2 × 1∠ECA)

Z_offset is the offset impedance, for which magnitude is the OFFSET setting and angle is the FWD ECA.

The negative-sequence voltage must be greater than ***PRODUCT SETUP > DISPLAY PROPERTIES > VOLTAGE CUT-OFF LEVEL*** to be validated for use as polarizing signal. Additionally, when offset impedance is applied and negative-sequence current is above 0.2 pu, compensated negative-sequence voltage -V_2 + Z_offset x I_2 has to be above 0.02 pu in order to discriminate fault direction; otherwise when negative-sequence current is less than 0.2 pu, -V_2 is then used as the polarizing signal. If the polarizing signal is not validated, neither forward nor reverse indication is given. The following figure explains the usage of the voltage polarized directional unit of the element. It shows the phase angle comparator characteristics for a phase A to ground fault, with settings of

- ECA = 75° (element characteristic angle = centerline of operating characteristic)
- FWD LA = 80° (forward limit angle = ± the angular limit with the ECA for operation)
- REV LA = 80° (reverse limit angle = ± the angular limit with the ECA for operation)

The element incorporates a current reversal logic: if the reverse direction is indicated for at least 1.25 of a power system cycle, the prospective forward indication is delayed by 1.5 of a power system cycle. The element emulates an electromechanical directional device. Larger operating and polarizing signals result in faster directional discrimination, bringing more security to the element operation.

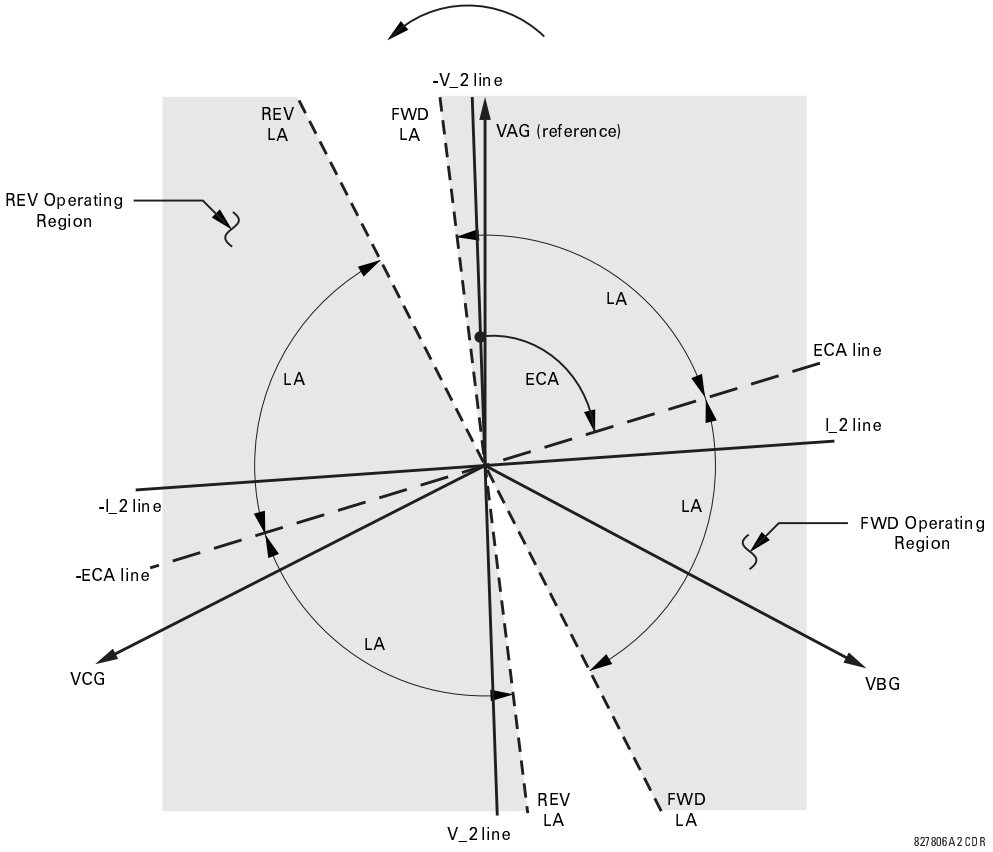

Figure 309: Negative-sequence directional characteristic

The forward-looking function is designed to be more secure compared to the reverse-looking function, so use the forward-looking function for the tripping direction. The reverse-looking function is faster compared to the forward-looking function, so use the reverse-looking function for the blocking direction. This allows for better protection coordination. Take this bias into account when using the negative-sequence directional overcurrent element to directionalize other protection elements. The negative-sequence current must be greater than the ***PRODUCT SETUP > DISPLAY PROPERTIES > CURRENT CUT-OFF LEVEL*** setting value.

Settings

NEG SEQ DIR OC1 OFFSET

Specifies the offset impedance used by this protection. The primary application for the offset impedance is to guarantee correct identification of fault direction on series compensated lines (see the Application of Settings chapter for information on how to calculate this setting). In regular applications, the offset impedance ensures proper operation even if the negative-sequence voltage at the relaying point is very small. If this is the intent, the offset impedance shall not be larger than the negative-sequence impedance of the protected circuit. Practically, it is several times smaller. Enter the offset impedance in secondary ohms.

NEG SEQ DIR OC1 TYPE

Selects the operating mode for the overcurrent unit of the element. The choices are “Neg Sequence” and “Zero Sequence.” In some applications it is advantageous to use a directional negative-sequence overcurrent function instead of a directional zero-sequence overcurrent function as inter-circuit mutual effects are minimized.

NEG SEQ DIR OC1 POS-SEQ RESTRAINT

Controls the positive-sequence restraint. Set it to 0.063 (in “Zero Sequence” mode) or 0.125 (in “Neg Sequence” mode) for backward compatibility with revisions 3.40 and earlier. Set it to zero to remove the restraint. Set it higher if large system unbalances or poor CT performance are expected.

NEG SEQ DIR OC1 FWD ECA

Select the element characteristic angle (ECA) for the forward direction. The element characteristic angle in the reverse direction is the angle set for the forward direction shifted by 180°.

NEG SEQ DIR OC1 FWD LIMIT ANGLE

Defines a symmetrical limit angle (in both directions from the ECA) for the forward direction.

NEG SEQ DIR OC1 FWD PICKUP

Defines the pickup level for the overcurrent unit in the forward direction. This pickup threshold applies to zero-sequence or negative-sequence current based on the NEG SEQ DIR OC1 TYPE setting. When specifying this setting, keep in mind that the design uses a positive-sequence restraint technique.

NEG SEQ DIR OC1 REV LIMIT ANGLE

Defines a symmetrical limit angle (in both directions from the ECA) for the reverse direction.

NEG SEQ DIR OC1 REV PICKUP

Defines the pickup level for the overcurrent unit in the reverse direction. This pickup threshold applies to zero-sequence or negative-sequence current based on the NEG SEQ DIR OC1 TYPE setting. When selecting this setting, keep in mind that the design uses a positive-sequence restraint technique.

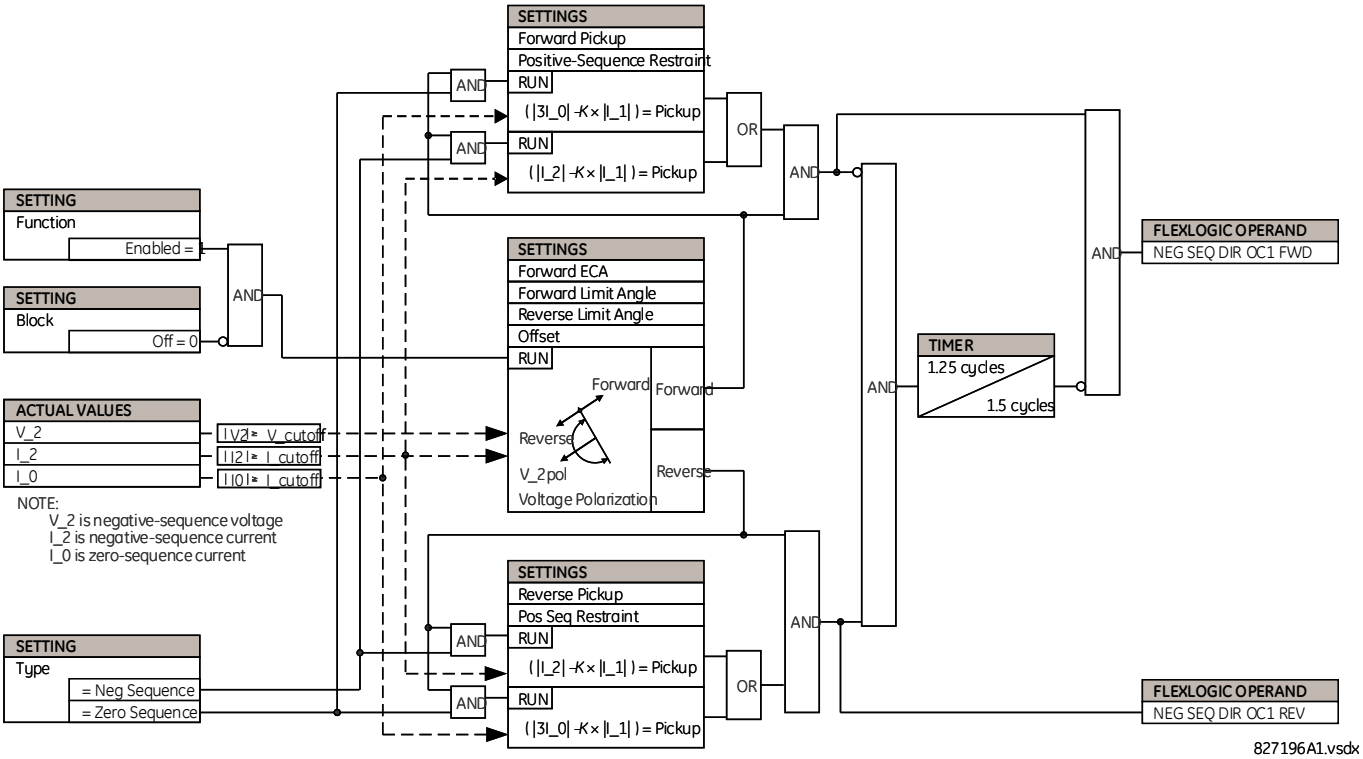

Figure 310: Negative-sequence directional OC1 logic

9.7.11 BREAKER FAILURE (ANSI 50BF)

SETTINGS > GROUPED ELEMENTS > SETTING GROUP 1(6) > BREAKER FAILURE > BREAKER FAILURE <n>

> *Note:*
> *Only Breaker failure 1 is shown*

■ BREAKER FAILURE 1 ■	⇔	BF1 FUNCTION: Disabled	Range: Disabled, Enabled
	⇕	BF1 MODE: 3-Pole	Range: 3-Pole, 1-Pole
	⇕	BF1 SOURCE: SRC 1	Range: SRC <n> Not applicable to relays with 9-2LE
	⇕	BF1 USE AMP SUPV: Yes	Range: Yes, No
	⇕	BF1 USE SEAL-IN: Yes	Range: Yes, No
	⇕	BF1 3-POLE INITIATE: Off	Range: FlexLogic operand
	⇕	BF1 3-POLE INITIATE2: Off	Range: FlexLogic operand B30 only
	⇕	BF1 BLOCK: Off	Range: FlexLogic operand

⇕	BF1 RETRIP PICKUP DELAY: 0.033 s	Range: 0.000 to 65.535 s in steps of 0.001
⇕	BF1 PH AMP SUPV PICKUP: 1.050 pu	Range: 0.020 to 30.000 pu in steps of 0.001
⇕	BF1 N AMP SUPV PICKUP: 1.050 pu	Range: 0.020 to 30.000 pu in steps of 0.001
⇕	BF1 USE TIMER 1: Yes	Range: Yes, No
⇕	BF1 TIMER 1 PICKUP DELAY: 0.000 s	Range: 0.000 to 65.535 s in steps of 0.001
⇕	BF1 USE TIMER 2: Yes	Range: Yes, No
⇕	BF1 TIMER 2 PICKUP DELAY: 0.000 s	Range: 0.000 to 65.535 s in steps of 0.001
⇕	BF1 USE TIMER 3: Yes	Range: Yes, No
⇕	BF1 TIMER 3 PICKUP DELAY: 0.000 s	Range: 0.000 to 65.535 s in steps of 0.001
⇕	BF1 BKR POS1 ϕA/3P: Off	Range: FlexLogic operand
⇕	BF1 BKR POS2 ϕA/3P: Off	Range: FlexLogic operand
⇕	BF1 BKR TEST ON: Off	Range: FlexLogic operand
⇕	BF1 PH AMP HISET PICKUP: 1.050 pu	Range: 0.020 to 30.000 pu in steps of 0.001
⇕	BF1 N AMP HISET PICKUP: 1.050 pu	Range: 0.020 to 30.000 pu in steps of 0.001
⇕	BF1 PH AMP LOSET PICKUP: 1.050 pu	Range: 0.020 to 30.000 pu in steps of 0.001
⇕	BF1 N AMP LOSET PICKUP: 1.050 pu	Range: 0.020 to 30.000 pu in steps of 0.001
⇕	BF1 LOSET TIME DELAY: 0.000 s	Range: 0.000 to 65.535 s in steps of 0.001
⇕	BF1 TRIP DROPOUT DELAY: 0.000 s	Range: 0.000 to 65.535 s in steps of 0.001
⇕	BF1 TARGET: Self-reset	Range: Self-reset, Latched, Disabled
⇕	BF1 EVENTS: Disabled	Range: Disabled, Enabled
⇕	BF1 PH A INITIATE: Off	Range: FlexLogic operand Valid only for 1-Pole breaker failure schemes
⇕	BF1 PH B INITIATE: Off	Range: FlexLogic operand Valid only for 1-Pole breaker failure schemes
⇕	BF1 PH C INITIATE: Off	Range: FlexLogic operand Valid only for 1-Pole breaker failure schemes

⇕	BF1 PH A INITIATE2: Off	Range: FlexLogic operand Valid only for 1-Pole breaker failure schemes B30 only
⇕	BF1 PH B INITIATE2: Off	Range: FlexLogic operand Valid only for 1-Pole breaker failure schemes B30 only
⇕	BF1 PH C INITIATE2: Off	Range: FlexLogic operand Valid only for 1-Pole breaker failure schemes B30 only
⇕	BF1 BKR POS1 ϕB: Off	Range: FlexLogic operand Valid only for 1-Pole breaker failure schemes
⇕	BF1 BKR POS1 ϕC: Off	Range: FlexLogic operand Valid only for 1-Pole breaker failure schemes
⇕	BF1 BKR POS2 ϕB: Off	Range: FlexLogic operand Valid only for 1-Pole breaker failure schemes
⇧	BF1 BKR POS2 ϕC: Off	Range: FlexLogic operand Valid only for 1-Pole breaker failure schemes

A breaker failure scheme determines that a breaker signaled to trip has not cleared a fault within a definite time, so further tripping action must be performed. Tripping from the breaker failure scheme trips all breakers, both local and remote, that can supply current to the faulted zone. Usually operation of a breaker failure element causes clearing of a larger section of the power system than the initial trip. Because breaker failure can result in tripping a large number of breakers and this affects system safety and stability, a very high level of security is required.

Two schemes are provided: one for three-pole tripping only (identified by the name “3BF”) and one for three pole plus single-pole operation (identified by the name “1BF”). The philosophy used in these schemes is identical. The operation of a breaker failure element includes three stages: initiation, determination of a breaker failure condition, and output.

9.7.11.1 STAGE 1: INITIATION

A FlexLogic operand representing the protection trip signal initially sent to the breaker must be selected to initiate the scheme. The initiating signal is sealed-in if primary fault detection can reset before the breaker failure timers have finished timing. The seal-in is supervised by current level, so it is reset when the fault is cleared. If desired, an incomplete sequence seal-in reset can be implemented by using the initiating operand to also initiate a FlexLogic timer, set longer than any breaker failure timer, whose output operand is selected to block the breaker failure scheme.

For the Product relay, the protection trip signal initially sent to the breaker is already programmed as a trip output. The protection trip signal does not include other breaker commands that are not indicative of a fault in the protected zone.

Schemes can be initiated either directly or with current level supervision. It is particularly important in any application to decide if a current-supervised initiate is to be used. The use of a current-supervised initiate results in the breaker failure element not being initiated for a breaker that has very little or no current flowing through it, which can be the case for transformer faults. For those situations where it is required to maintain breaker fail coverage for fault levels below the ***BF1 PH AMP SUPV PICKUP*** or the ***BF1 N AMP SUPV PICKUP*** setting, do not use a current supervised initiate. Utilize this feature for those situations where coordinating margins can be reduced when high speed reclosing is used. Thus, if this choice is made, fault levels must always be above the supervision pickup levels for dependable operation of the breaker fail scheme. This can also occur in breaker-and-a-half or ring bus configurations where the first breaker closes into a fault; the protection trips and attempts to initiate breaker failure for the second breaker, which is in the process of closing, but does not yet have current flowing through it.

When the scheme is initiated, it sends a trip signal after a pickup delay to the breaker initially signaled to trip (this feature is usually described as re-trip). This reduces the possibility of widespread tripping that results from a declaration of a failed breaker.

9.7.11.2 STAGE 2: DETERMINATION OF A BREAKER FAILURE CONDITION

The schemes determine a breaker failure condition via three paths. Each of these paths is equipped with a time delay, after which a failed breaker is declared and trip signals are sent to all breakers required to clear the zone. The delayed paths are associated with breaker failure Timers 1, 2, and 3, which are intended to have delays increasing with increasing timer numbers. These delayed paths are individually enabled to allow for maximum flexibility.

Timer 1 logic (early path) is supervised by a fast-operating breaker auxiliary contact. If the breaker is still closed (as indicated by the auxiliary contact) and fault current is detected after the delay interval, an output is issued. Operation of the breaker auxiliary switch indicates mechanical operation of breaker. The continued presence of current indicates that the breaker has failed to interrupt the circuit.

Timer 2 logic (main path) is not supervised by a breaker auxiliary contact. If fault current is detected after the delay interval, an output is issued. This path is intended to detect a breaker that opens mechanically but fails to interrupt fault current; the logic therefore does not use a breaker auxiliary contact.

The Timer 1 and 2 paths provide two levels of current supervision, HISET and LOWSET, that allow the supervision level to change from a current that flows before a breaker inserts an opening resistor into the faulted circuit to a lower level after resistor insertion. The HISET detector is enabled after timeout of Timer 1 or 2, along with a timer that enables the LOWSET detector after its delay interval. The delay interval between HISET and LOWSET is the expected breaker opening time. Both current detectors provide a fast operating time for currents at small multiples of the pickup value. The overcurrent detectors are required to operate after the breaker failure delay interval in case current still flows through the breaker, and they are supervised by a fast reset element described as follows.

The ***BFx LOSET TIME DELAY*** is based on the time that breaker resistor limited current can flow through the circuit after the breaker interruption time. Both current detectors provide fast operating time for small multiples of the pickup setting.

Timer 3 logic (slow path) is supervised by a breaker auxiliary contact and a control switch contact used to indicate that the breaker is in or out-of-service, disabling this path when the breaker is out-of-service for maintenance. There is no current level check in this logic as it is intended to detect low magnitude faults and it is therefore the slowest to operate.

9.7.11.3 STAGE 3: OUTPUT

The outputs from the schemes are:

- FlexLogic operands that report on the operation of portions of the scheme
- FlexLogic operand used to re-trip the protected breaker
- FlexLogic operands that initiate tripping required to clear the faulted zone. The trip output can be sealed-in for an adjustable period.
- Target message indicating a failed breaker has been declared
- Illumination of the front panel Trip LED (and the Phase A, B, or C LED, if applicable)

9.7.11.4 MAIN PATH SEQUENCE

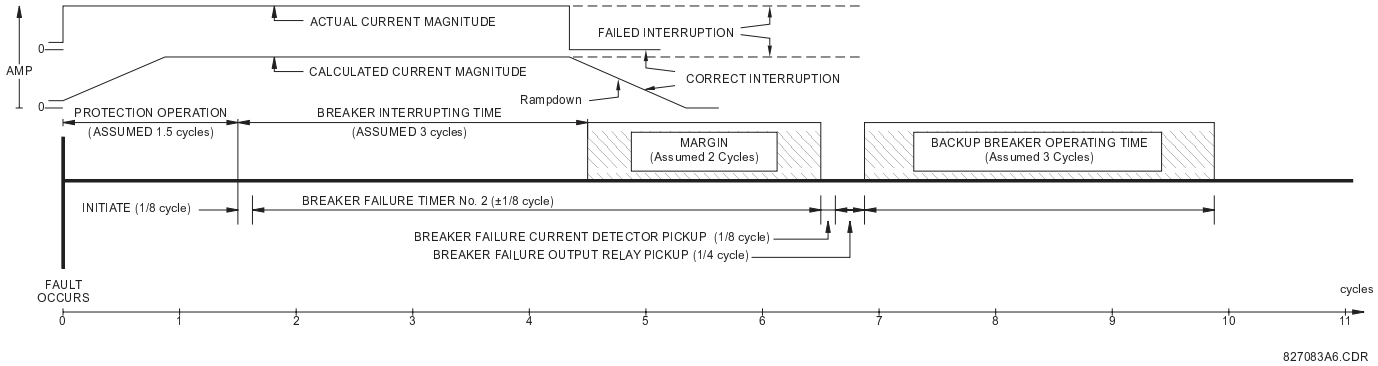

Figure 311: Breaker failure main path sequence

The current supervision elements reset in less than 0.7 of a power cycle for any multiple of pickup current as shown in the following figure.

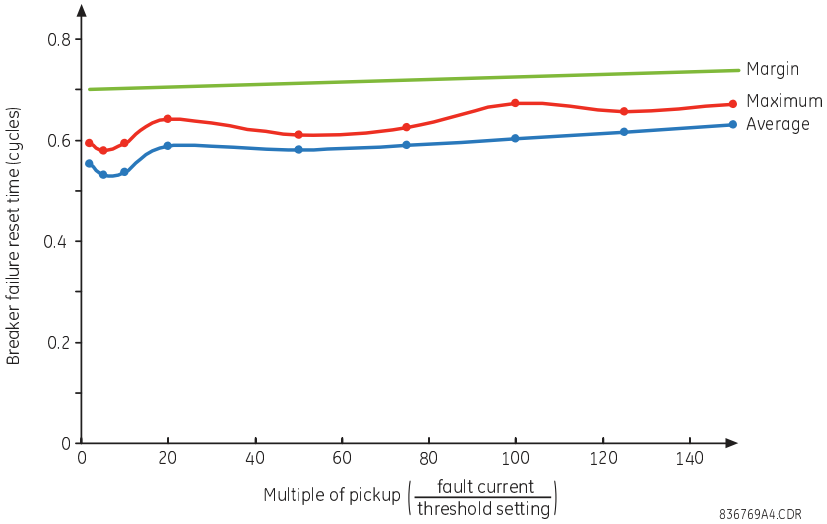

Figure 312: Breaker failure overcurrent supervision reset time

9.7.11.5 BF SETTINGS

BF1 MODE

This setting is used to select the breaker failure operating mode: single or three pole.

BF1 USE AMP SUPV

If set to `Yes` the element is initiated if current flowing through the breaker is above the supervision pickup level.

BF1 USE SEAL-IN

If set to `Yes` the element is sealed-in if current flowing through the breaker is above the supervision pickup level.

BF1 3-POLE INITIATE

This setting selects the FlexLogic operand that initiates three-pole tripping of the breaker.

BF1 3-POLE INITIATE2 (B30 only)

This setting displays for order codes with a Process Bus Module. It is OR'ed with the ***INITIATE*** setting.

BF1 RETRIP PICKUP DELAY

This setting specifies a pickup delay for the re-trip command. Set this delay longer than the possible spurious contact input activation duration due to transients or temporary DC grounds, taking into account the contact input de-bounce time to avoid re-trip operation for such transients.

BF1 PH AMP SUPV PICKUP

This setting is used to set the phase current initiation and seal-in supervision level. Generally this setting detects the lowest expected fault current on the protected breaker. It can be set as low as necessary (lower than breaker resistor current or lower than load current)—HISET and LOWSET current supervision guarantee correct operation.

BF1 N AMP SUPV PICKUP

This setting is used to set the neutral current initiate and seal-in supervision level. Generally this setting detects the lowest expected fault current on the protected breaker. Neutral current supervision is used only in the three phase scheme to provide increased sensitivity. This setting is valid only for three-pole tripping schemes.

BF1 USE TIMER 1

If set to `Yes` the early path is operational.

BF1 TIMER 1 PICKUP DELAY

Timer 1 is set to the shortest time required for breaker auxiliary contact Status-1 to open, from the time the initial trip signal is applied to the breaker trip circuit, plus a safety margin.

BF1 USE TIMER 2

If set to `Yes` the main path is operational.

BF1 TIMER 2 PICKUP DELAY

Timer 2 is set to the expected opening time of the breaker, plus a safety margin. This safety margin was historically intended to allow for measuring and timing errors in the breaker failure scheme equipment. In microprocessor relays this time is not significant. In Product relays, which use a Fourier transform, the calculated current magnitude ramps-down to zero one power frequency cycle after the current is interrupted, however this lag does not need to be included in the overall margin duration due to a novel current supervision reset element, as it occurs after current interruption. As shown in the previous figure, this current supervision reset element guarantees breaker failure reset in less than 0.7 power cycles for any subsidence current and irrespective of the magnitude of the fault current.

Note that in bulk oil circuit breakers, the interrupting time for currents less than 25% of the interrupting rating can be significantly longer than the normal interrupting time.

BF1 USE TIMER 3

If set to `Yes` the Slow Path is operational.

BF1 TIMER 3 PICKUP DELAY

Timer 3 is set to the same interval as Timer 2, plus an increased safety margin. Because this path is intended to operate only for low level faults, the delay can be in the order of 300 to 500 ms.

BF1 BKR POS1 ΦA/3P

This setting selects the FlexLogic operand that represents the protected breaker early-type auxiliary switch contact (52/a). When using the single-pole breaker failure scheme, this operand represents the protected breaker early-type auxiliary switch contact on pole A. This is normally a non-multiplied form-A contact. The contact can even be adjusted to have the shortest possible operating time.

BF1 BKR POS2 ΦA/3P

This setting selects the FlexLogic operand that represents the breaker normal-type auxiliary switch contact (52/a). When using the single-pole breaker failure scheme, this operand represents the protected breaker auxiliary switch contact on pole A. This can be a multiplied contact.

BF1 BKR TEST ON

This setting is used to select the FlexLogic operand that represents the breaker in-service/out-of-service switch set to the out-of-service position.

BF1 PH AMP HISET PICKUP

This setting sets the phase current output supervision level. Generally this setting is to detect the lowest expected fault current on the protected breaker, before a breaker opening resistor is inserted.

BF1 N AMP HISET PICKUP

This setting sets the neutral current output supervision level. Generally this setting is to detect the lowest expected fault current on the protected breaker, before a breaker opening resistor is inserted. Neutral current supervision is used only in the three pole scheme to provide increased sensitivity. This setting is valid only for three-pole breaker failure schemes.

BF1 PH AMP LOSET PICKUP

This setting sets the phase current output supervision level. Generally this setting is to detect the lowest expected fault current on the protected breaker, after a breaker opening resistor is inserted (approximately 90% of the resistor current).

BF1 N AMP LOSET PICKUP

This setting sets the neutral current output supervision level. Generally this setting is to detect the lowest expected fault current on the protected breaker, after a breaker opening resistor is inserted (approximately 90% of the resistor current). This setting is valid only for three-pole breaker failure schemes.

BF1 LOSET TIME DELAY

Sets the pickup delay for current detection after opening resistor insertion.

BF1 TRIP DROPOUT DELAY

This setting is used to set the period of time for which the trip output is sealed-in. This timer must be coordinated with the automatic reclosing scheme of the failed breaker, to which the breaker failure element sends a cancel reclosure signal. Reclosure of a remote breaker can also be prevented by holding a transfer trip signal on longer than the reclaim time.

BF1 PH A INITIATE / BF1 PH B INITIATE / BF1 PH C INITIATE

These settings select the FlexLogic operand to initiate phase A, B, or C single-pole tripping of the breaker and the phase A, B, or C portion of the scheme, accordingly. This setting is only valid for single-pole breaker failure schemes.

BF1 PH A INITIATE2 / BF1 PH B INITIATE2 / BF1 PH C INITIATE2 (B30 only)

These settings display for order codes with a Process Bus Module. They are OR’ed with the INITIATE settings.

BF1 BKR POS1 ΦB / BF1 BKR POS 1 ΦC

These settings select the FlexLogic operand to represents the protected breaker early-type auxiliary switch contact on poles B or C, accordingly. This contact is normally a non-multiplied Form-A contact. The contact can even be adjusted to have the shortest possible operating time. This setting is valid only for single-pole breaker failure schemes.

BF1 BKR POS2 ΦB

Selects the FlexLogic operand that represents the protected breaker normal-type auxiliary switch contact on pole B (52/a). This can be a multiplied contact. This setting is valid only for single-pole breaker failure schemes.

BF1 BKR POS2 ΦC

This setting selects the FlexLogic operand that represents the protected breaker normal-type auxiliary switch contact on pole C (52/a). This can be a multiplied contact. For single-pole operation, the scheme has the same overall general concept except that it provides re-tripping of each single pole of the protected breaker. The approach shown in the following single pole tripping diagram uses the initiating information to determine which pole is supposed to trip. The logic is segregated on a per-pole basis. The overcurrent detectors have ganged settings. This setting is valid only for single-pole breaker failure schemes.

Upon operation of the breaker failure element for a single pole trip command, a three-pole trip command needs to be given via output operand BKR FAIL 1 TRIP OP.

Note:
By default only the BKR FAIL x TRIP OP operand generates an event in the event log. BKR FAIL x RETRIP, BKR FAIL x T1 OP, BKR FAIL x T2 OP, and BKR FAIL x T3 OP do not generate events in the event log. If you wish to log an event for the above Flexlogic operands, then these Flexlogic operands can be assigned to Virtual Outputs by enabling the ***EVENTS*** *setting for the relevant Virtual Output.*

9.7.11.6 BF LOGIC

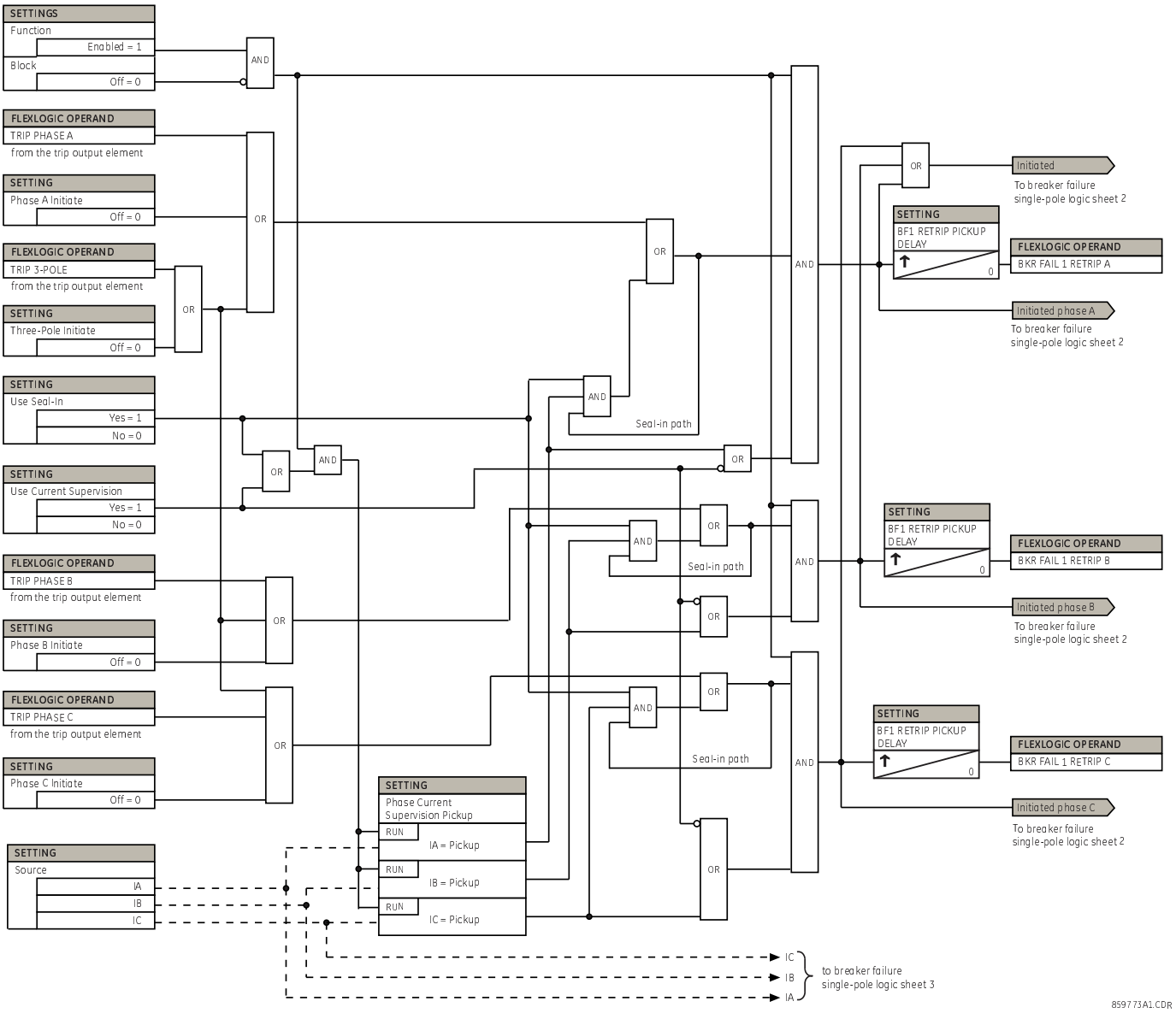

Figure 313: Single-pole breaker failure, initiate logic

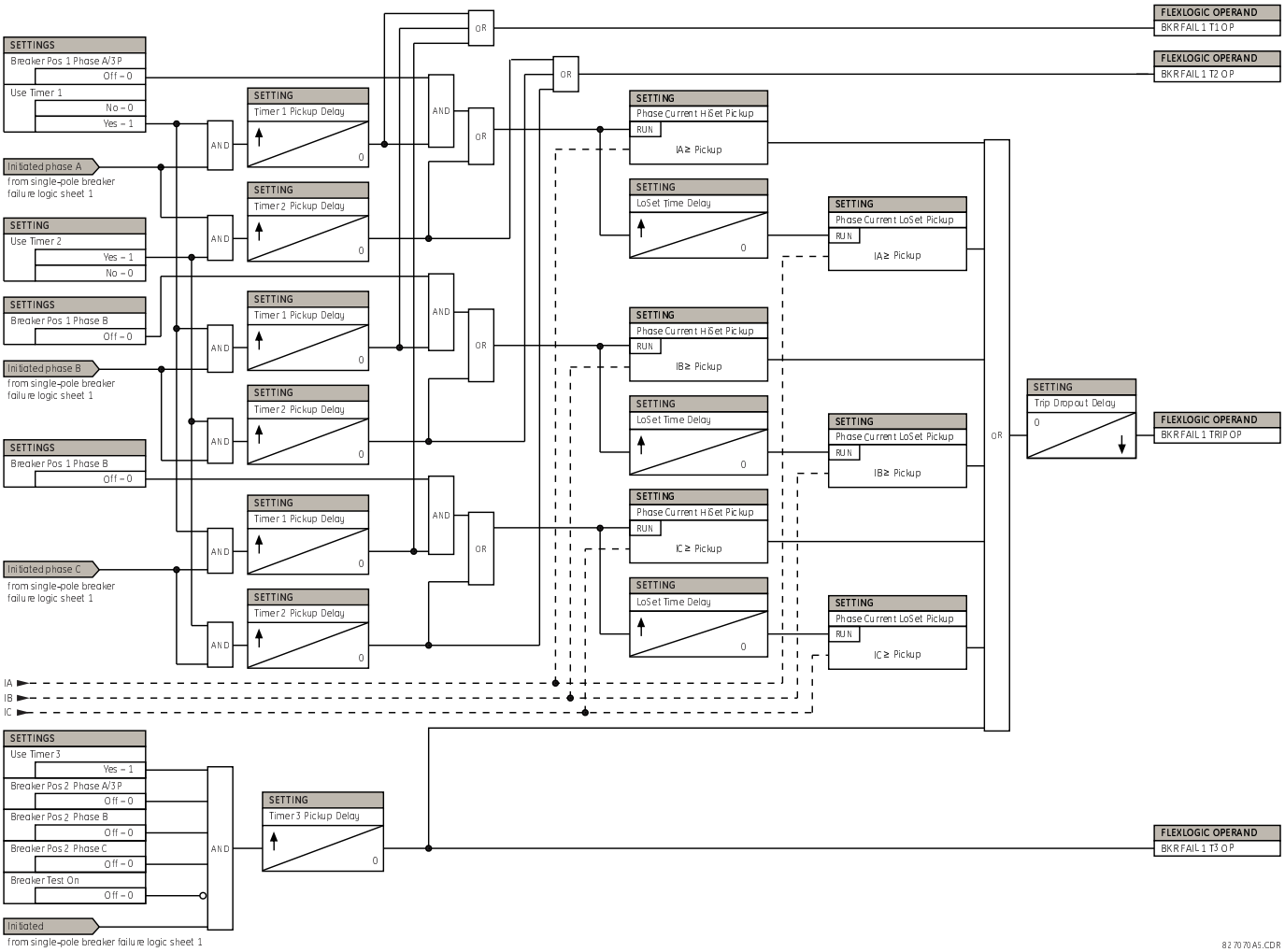

Figure 314: Single-pole breaker failure, timers logic

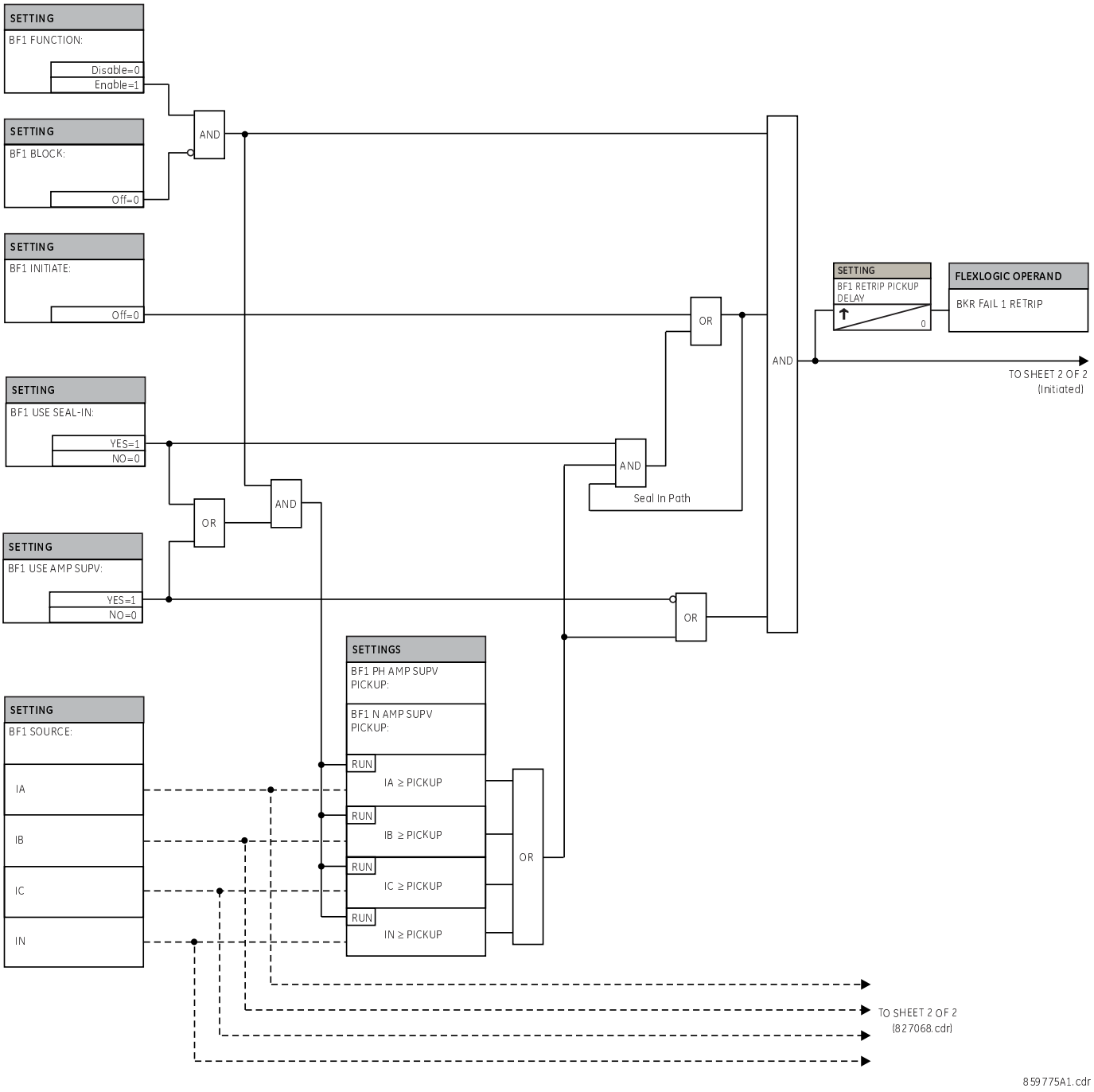

Figure 315: Three-pole breaker failure, initiate logic

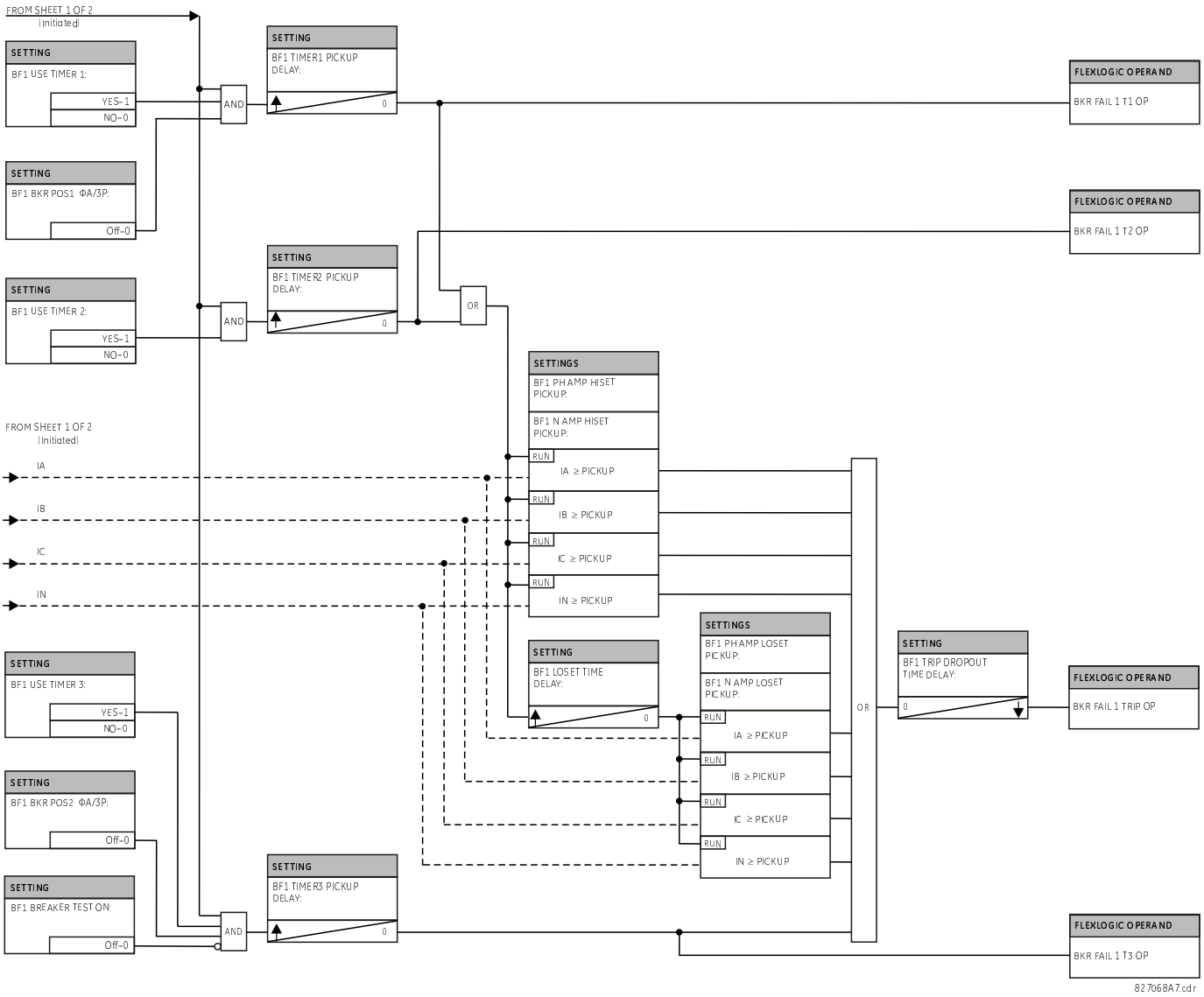

Figure 316: Three-pole breaker failure, timers logic

9.7.12 STUB BUS

For L30 and L90: SETTINGS > GROUPED ELEMENTS > SETTING GROUP 1(6) > LINE DIFFERENTIAL ELEMENTS > STUB BUS

For C60, D60 and T60*: SETTINGS > GROUPED ELEMENTS > SETTING GROUP 1(6) STUB BUS

> *Note:*
> **The T60 has two Stub Bus elements. Only the first one is shown here.*

■ STUB BUS ■	⇔	STUB BUS 1 FUNCTION: FUNCTION: Disabled	Range: Disabled, Enabled
	⇕	STUB BUS 1 SOURCE 1: None	Range: None, SRC <n>
	⇕	STUB BUS 1 SOURCE 2: None	Range: None, SRC <n>

⇕	STUB BUS 1 PICKUP: 0.200 pu	Range: 0.020 to 30.000 pu in steps of 0.001
⇕	STUB BUS 1 DISCONCT: Off	Range: FlexLogic operand
⇕	STUB BUS 1 TRIGGER: Off	Range: FlexLogic operand
⇕	STUB BUS 1 DELAY: 0.00 s	Range: 0.00 to 600.00 s in steps of 0.01
⇕	STUB BUS 1 BLOCK: Off	Range: FlexLogic operand
⇕	STUB BUS 1 TARGET: Self-reset	Range: Self-reset, Latched, Disabled
⇧	STUB BUS 1 EVENTS: Disabled	Range: Disabled, Enabled

The stub bus element protects for faults between two breakers in a breaker-and-a-half or ring bus configuration when the line disconnect switch is open. At the same time, if the line is still energized through the remote terminal(s), differential protection is still required (the line can still need to be energized because there is a tapped load on a two-terminal line or because the line is a three-terminal line with two of the terminals still connected). Correct operation for this condition is achieved by the local relay sending zero current values to the remote end(s) so that a local bus fault does not result in tripping the line. At the local end, the differential element is disabled and stub bus protection is provided by a user-selected overcurrent element. If there is a line fault, the remote end(s) trips on differential but local differential function and the DTT signal (if enabled) to the local end are blocked by the stub bus logic, allowing the local breakers to remain closed.

STUB BUS 1 FUNCTION

There are three requirements for stub bus operation: the element must be enabled, an indication that the line disconnect is open, and the ***STUB BUS 1 TRIGGER*** setting or ***STUB BUS 1 SOURCE 1(2)*** setting is set. There are two methods to set the stub bus trigger and thus setting up stub bus operation, as follows:

- With ***STUB BUS 1 TRIGGER*** set to `On`, the STUB BUS 1 PKP operand picks up as soon as the disconnect switch opens. This is indicated by the assertion of the STUB BUS 1 ARMED operand. Assertion of the STUB BUS 1 ARMED operand results in zero currents being transmitted to the remote end(s) and DTT receipt from remote end(s) being permanently blocked. An overcurrent element, blocked by the closed disconnect switch, provides protection for the local bus.
- An alternative method is to set ***STUB BUS 1 TRIGGER*** to be the pickup of an assigned instantaneous overcurrent element. In this case, ***STUB BUS 1 SOURCE 1*** and ***STUB BUS 1 SOURCE 2*** are set to `None`. As soon as the disconnect switch is open, STUB BUS 1 ARMED asserts and disables the local differential. Zero currents are then sent to the other terminal(s). STUB BUS 1 PKP asserts immediately after the assertion of the assigned instantaneous overcurrent element. The instantaneous overcurrent element must operate quickly enough to pick up the STUB BUS 1 ARMED operand, disable the local differential, and send zero currents to the other terminal(s). If the bus minimum fault current is above five times the instantaneous overcurrent pickup, tests have confirmed that the STUB BUS OPERATE operand always picks up correctly for a stub bus fault and prevents tripping of the remote terminal. If minimum stub bus fault current is below this value, then use method 1. Note also that correct testing of stub bus operation, when this method is used, requires sudden injection of a fault currents above five times instantaneous overcurrent pickup. The assigned current element needs to be mapped to the appropriate output contact(s) to trip the stub bus breakers. It should be blocked unless disconnect is open. To prevent 87L tripping from remote relays still protecting the line, assign the auxiliary contact of line disconnect switch (logic 1 when line switch is open) to block the local 87L function by using the ***CURRENT DIFF BLOCK*** setting.
- The third method is when the ***STUB BUS 1 TRIGGER*** setting is `Off`. In this case, the stub bus element operates as a standalone overcurrent protection element. In this mode, the element monitors the assigned

current sources directly, bypassing the need for an external trigger signal, while still being supervised by STUB BUS 1 ARMED , ensuring the element only responds when the line disconnect switch is open.

STUB BUS 1 SOURCE 1

This setting identifies the first signal source for the stub bus function.

STUB BUS 1 SOURCE 2

This setting identifies the second signal source for the stub bus function.

When both ***STUB BUS 1 SOURCE 1*** and ***STUB BUS 1 SOURCE 2*** are set to `None`, the stub bus function relies on the ***STUB BUS 1 TRIGGER*** and ***STUB BUS 1 DISCONCT*** settings to make a decision. When the sources are assigned to both ***STUB BUS 1 SOURCE 1*** and ***STUB BUS 1 SOURCE 2***, the stub bus function allows internal summation as shown in the logic diagram.

STUB BUS 1 PICKUP

This setting specifies the stub bus pickup level in per-unit values.

STUB BUS 1 DISCONCT

This setting selects a FlexLogic operand to represent the open state of auxiliary contact of line disconnect switch (logic 1 when line disconnect switch is open). If necessary, simple logic representing not only the line disconnect switch but also the closed state of the breakers can be created with FlexLogic and assigned to this setting.

STUB BUS 1 TRIGGER

This setting selects a FlexLogic operand that causes the STUB BUS 1 OP operand to pick up if the line disconnect is open. It can be set either to ON or to an instantaneous overcurrent element (as outlined). If the instantaneous overcurrent used for the stub bus protection is set with a time delay, then STUB BUS 1 TRIGGER should use the associated instantaneous overcurrent pickup operand. The source assigned for the current of this element must cover the stub between CTs of the associated breakers and disconnect switch.

STUB BUS 1 DELAY

This setting delays the assertion of the STUB BUS 1 OP operand.

STUB BUS 1 BLOCK

When the FlexLogic operand asserted by this setting is high, the stub bus element is blocked

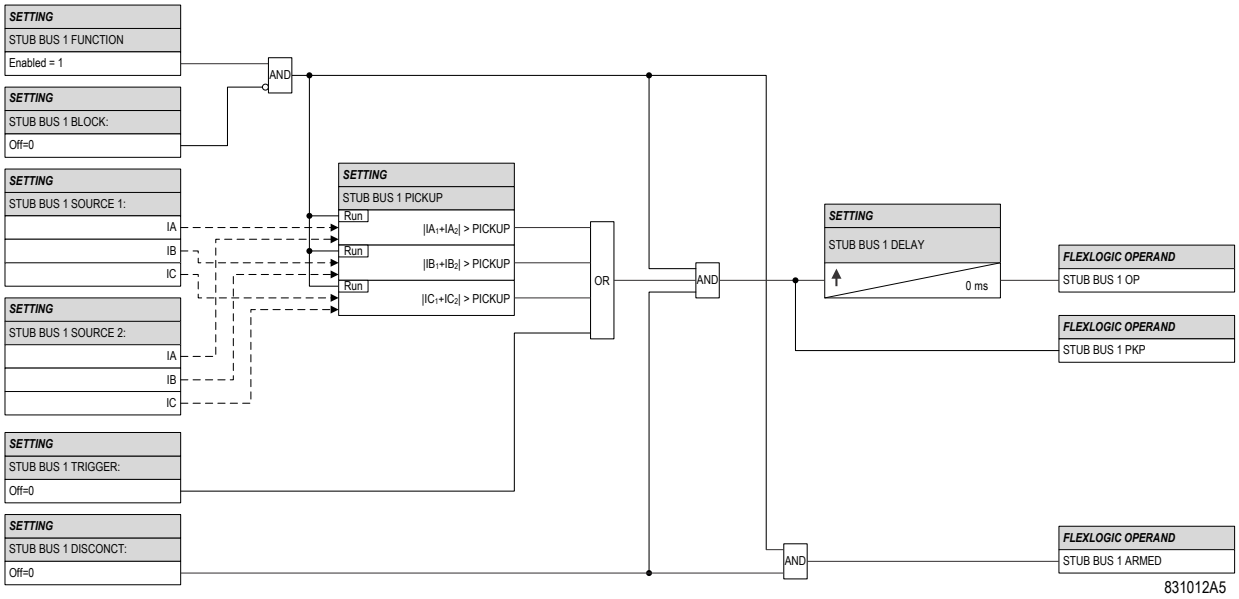

Figure 317: Stub bus logic

9.7.13 VOLTAGE ELEMENTS

9.7.13.1 VOLTAGE ELEMENTS MENU

SETTINGS > GROUPED ELEMENTS > SETTING GROUP 1(6) > VOLTAGE ELEMENTS

■ VOLTAGE ELEMENTS ■	⇔	■ PHASE ■ UNDERVOLTAGE<n> — All models except C30, T35
	⇕	■ PHASE ■ OVERVOLTAGE<n> — All models except C30, T35
	⇕	■ NEUTRAL OV<n> ■ — All models except C30, B90, N60, T35
	⇕	■ NEG SEQ OV <n> ■ — All models except B30, B90, C30, C60, C95, F35, L90, N60, T35,
	⇕	■ AUXILIARY UV<n> ■ — All models except B90, C30, C70, N60, T35
	⇕	■ AUXILIARY OV<n> ■ — All models except B90, C30, N60, T35
	⇕	■ VOLTS/HZ <n> ■ — G30, G60, L90, T60
	⇕	■ COMPENSATED> ■ OVERVOLTAGE — D60, L60, L90,
	⇕	■ VOLTAGE ■ DIFFERENTIAL <n> — C70
	⇕	■ BANK ■ OVERVOLTAGE — C70
	⇧	■ NEUTRAL VOLTAGE ■ UNBALANCE <n> — C70

These protection elements can be used for a variety of applications, such as

- Undervoltage protection — For voltage sensitive loads, such as induction motors, a drop in voltage increases the drawn current, which can cause dangerous overheating in the motor. The undervoltage protection feature can be used to either cause a trip or generate an alarm when the voltage drops below a specified voltage setting for a specified time delay.
- Overvoltage protection — Overvoltage elements can be used to protect voltage sensitive loads and system components against sustained overvoltage conditions
- Permissive functions — The undervoltage/overvoltage features can be used to block the functioning of external devices by operating an output relay when the voltage falls below/exceeds the specified voltage setting. The undervoltage/overvoltage features can also be used to block the functioning of other elements through the block feature of those elements.
- Source transfer schemes — In the event of undervoltage/overvoltage, a transfer signal can be generated to transfer a load from its normal source to a standby or emergency power source

9.7.13.2 UNDERVOLTAGE INVERSE TIME CURVES

The undervoltage elements can be programmed to have an inverse time delay characteristic. If in the respective element the CURVE setting is set to Inverse Time, the undervoltage delay setting establishes the operating curve of the element as follows:

$$T = \frac{D}{\left(1 - \frac{V}{V_{pickup}}\right)}$$

where

- T = operating time
- D = undervoltage delay setting (D = 0.00 operates instantaneously)
- V = secondary voltage applied to the relay
- V_{pickup} = pickup level

For reset time, see the settings section of the applicable element.

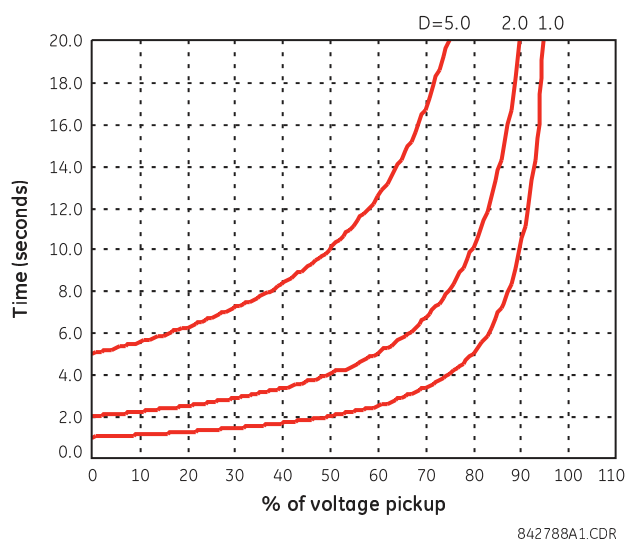

Figure 318: Inverse time undervoltage curves

At 0% of pickup, the operating time equals the corresponding undervoltage element ***DELAY*** setting.

9.7.13.3 OVERVOLTAGE INVERSE TIME CURVES

The overvoltage elements can be programmed to have an inverse time delay characteristic. If in the respective element the CURVE setting is set to Inverse Time, the overvoltage pickup delay setting establishes the operating curve of the element as follows:

$$T = D / (V/V_{pickup} - 1)$$

where:

- T = operating time
- D = undervoltage delay setting (D = 0.00 operates instantaneously)
- V = secondary voltage applied to the relay
- V_{pickup} = pickup level

For reset time, see the settings section of the applicable element.

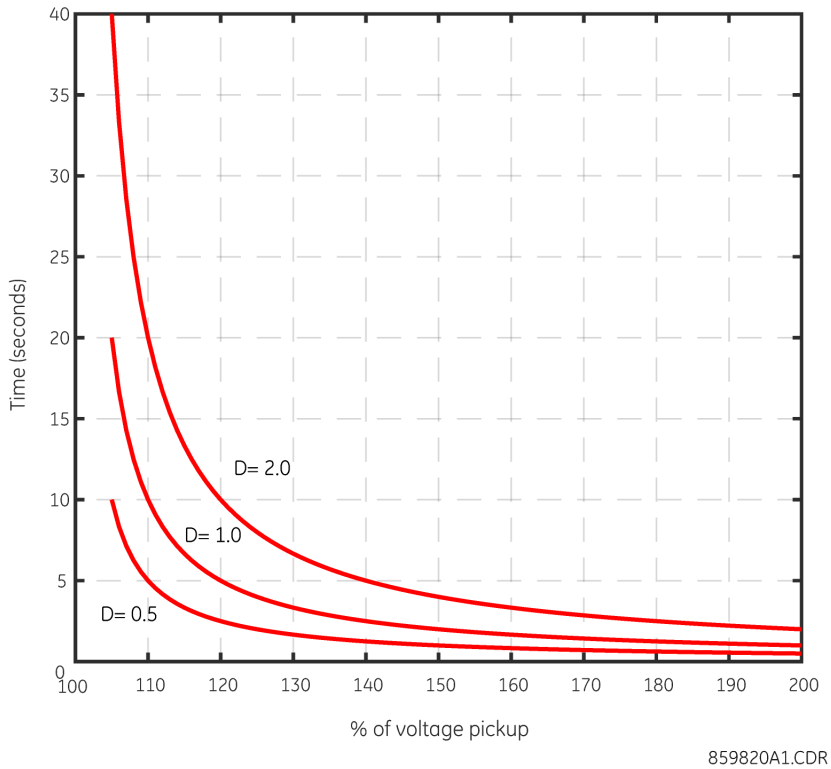

Figure 319: Inverse time overvoltage curves

9.7.13.4 PHASE UNDERVOLTAGE (ANSI 27P, IEC PTUV)

SETTINGS > GROUPED ELEMENTS > SETTING GROUP 1(6) > VOLTAGE ELEMENTS > PHASE UNDERVOLTAGE<n>

> *Note:*
> *Only Phase undervoltage 1 is shown*

■ PHASE ■ UNDERVOLTAGE 1	⇔	PHASE UV1 FUNCTION: Disabled	Range: Disabled, Enabled
	⇕	PHASE UV1 SIGNAL SOURCE: SRC 1	Range: SRC <n>

⇕	PHASE UV1 MODE: Phase to Ground	Range: Phase to Ground, Phase to Phase
⇕	PHASE UV1 PICKUP: 1.000 pu	Range: 0.004 to 3.000 pu in steps of 0.001
⇕	PHASE UV1 CURVE: Definite Time	Range: Definite Time, Inverse Time, FlexCurves A through D
⇕	PHASE UV1 DELAY: 1.00 s	Range: 0.00 to 600.00 s in steps of 0.01
⇕	PHASE UV1 RESET DELAY: 1.00 s	Range: 0.00 to 600.00 s in steps of 0.01
⇕	PHASE UV1 MINIMUM VOLTAGE: 0.100 pu	Range: 0.000 to 3.000 pu in steps of 0.001
⇕	PHASE UV1 BLOCK: Off	Range: FlexLogic operand
⇕	PHASE UV1 TARGET: Self-reset	Range: Self-reset, Latched, Disabled
⇧	PHASE UV1 EVENTS: Disabled	Range: Disabled, Enabled

PHASE UV1 SIGNAL SOURCE

Selects the signal source for the phase undervoltage protection element.

PHASE UV1 MODE

This setting defines the mode of operation that can be Phase-to-Phase or Phase-to-Ground voltage. Phase-to-ground or phase-to-phase voltages can be applied for wye VT connection, while phase-to-phase voltages can be applied for delta VT connections only.

PHASE UV1 PICKUP

This setting specifies the phase undervoltage protection element pickup level.

PHASE UV1 CURVE

This setting defines the timing characteristic of the element, which can be Definite Time, Inverse Time (per the curves described earlier in the Voltage Elements > Undervoltage Inverse Time Curves section), or FlexCurves A through D. The timing characteristic depends on this setting and the Delay setting that follows.

PHASE UV1 DELAY

This setting defines the operation time of the element.

- When the PHASE UV1 CURVE setting is set to Definite Time, the PHASE UV1 DELAY setting defines definite time delay for element operation.
- When the PHASE UV1 CURVE setting is set to Inverse Time, the PHASE UV1 DELAY setting defines the inverse curve time delay multiplier (D) that is used in the curve equation explained in the Voltage Elements > Undervoltage Inverse Time Curves section.
- When the PHASE UV1 CURVE setting is set to one of the FlexCurves, the PHASE UV1 DELAY setting defines the FlexCurve time delay multiplier (D) that is used in the following curve equation:

$$T = D \times \text{FlexCurve time at } (V_{pkp}/V)$$

For FlexCurves configuration instructions, see the ***System Setup > FlexCurves*** section.

PHASE UV1 RESET DELAY

When the Curve setting is set to Definite Time or Inverse Time, the element resets when applied voltage exceeds the dropout voltage for the duration of the selected ***RESET DELAY*** setting.

When the Curve setting is set to one of the FlexCurves, the element reset is based on the equation and not the ***PHASE UV1 RESET DELAY*** setting.

As shown in the equation, because the element is supposed to operate in undervoltage condition, the multiple of pickup value that defines the point on the FlexCurve characteristic is derived from the ratio of the set pickup value to the measured voltage (and not the reverse). For example, if Pickup is set to 0.9 pu, when measured voltage is 0.82 pu, the ratio is 0.9/0.82 = 1.1. Therefore, in FlexCurve, the corresponding operate time is at 1.1 x PKP (not at 0.82 x PKP). On the other hand, when measured voltage is 1 pu, the ratio is 0.9/1 = 0.9. Therefore, in FlexCurve, the corresponding reset time is at 0.9 x PKP.

PHASE UV1 MINIMUM VOLTAGE

This setting selects the operating voltage below which the element is blocked (a setting of "0" allows a dead source to be considered a fault condition).

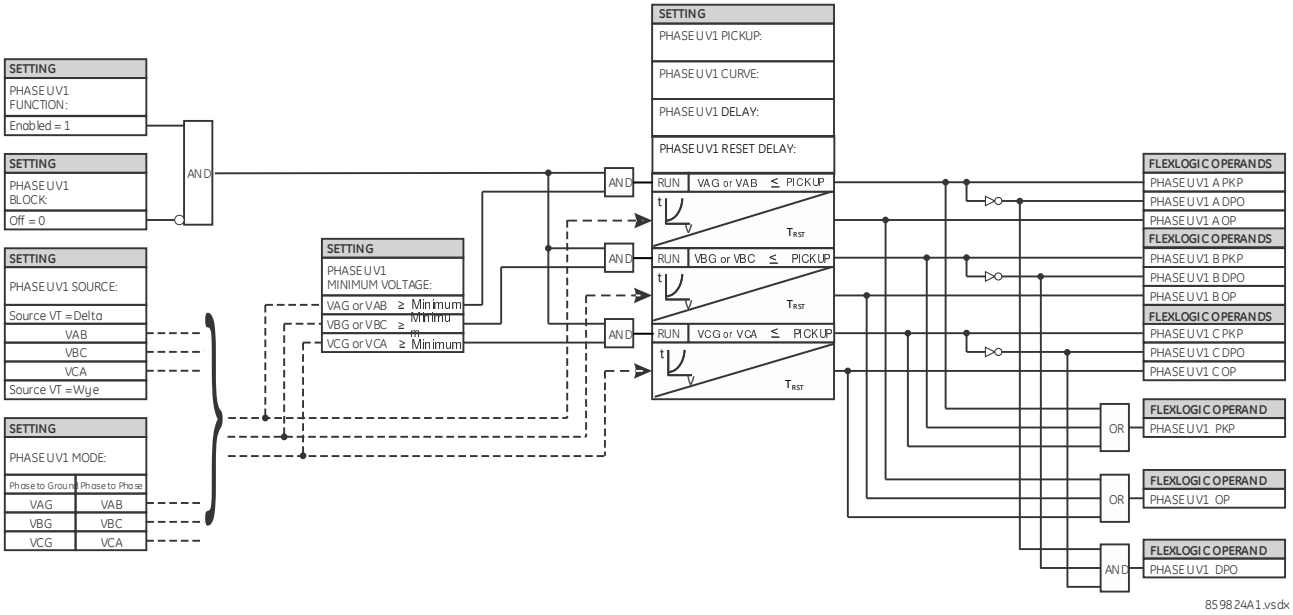

Figure 320: Phase undervoltage1 logic

9.7.13.5 PHASE OVERVOLTAGE (ANSI 59P, IEC PTOV)

SETTINGS > GROUPED ELEMENTS > SETTING GROUP 1(6) > VOLTAGE ELEMENTS > PHASE OVERVOLTAGE<n>

> *Note:*
> *Only Phase overvoltage 1 is shown*

■ PHASE ■ OVERVOLTAGE 1	⇔	PHASE OV1 FUNCTION: Disabled	Range: Disabled, Enabled
	⇕	PHASE OV1 SIGNAL SOURCE: SRC 1	Range: SRC <n>
	⇕	PHASE OV1 MODE: Phase to Ground	Range: Phase to Ground, Phase to Phase

⇕	PHASE OV1 PICKUP: 1.000 pu	Range: 0.004 to 3.000 pu in steps of 0.001
⇕	PHASE OV1 CURVE: Definite Time	Range: Definite Time, Inverse Time, FlexCurves A through D
⇕	PHASE OV1 DELAY: 1.00 s	Range: 0.00 to 600.00 s in steps of 0.01
⇕	PHASE OV1 RESET DELAY: 1.00 s	Range: 0.00 to 600.00 s in steps of 0.01
⇕	PHASE OV1 BLOCK: Off	Range: FlexLogic operand
⇕	PHASE OV1 TARGET: Self-reset	Range: Self-reset, Latched, Disabled
⇧	PHASE OV1 EVENTS: Disabled	Range: Disabled, Enabled

This element gives a time-delay operating characteristic versus the applied fundamental voltage.

PHASE OV1 SIGNAL SOURCE

Selects the signal source for the phase overvoltage protection element.

PHASE OV1 MODE

This setting defines the mode of operation, which can be Phase-to-Phase or Phase-to-Ground voltage. Phase-to-ground or phase-to-phase voltages can be applied for wye VT connection, while phase-to-phase voltages can be applied for delta VT connections only.

PHASE OV1 PICKUP

This setting specifies phase overvoltage protection element pickup level.

PHASE OV1 CURVE

This setting defines the timing characteristic of the element, which can be: Definite Time, Inverse Time (per the curves described in the Voltage Elements > Overvoltage Inverse Time Curves section), FlexCurves A through D. The timing characteristic depends on this setting and the Pickup Delay setting that follows.

PHASE OV1 PICKUP DELAY

This setting defines the operation time of the element.

- When the PHASE OV1 CURVE setting is set to Definite Time, the ***PHASE OV1 PICKUP DELAY*** setting defines definite time delay for element operation.
- When the PHASE OV1 CURVE setting is set to Inverse Time, the ***PHASE OV1 PICKUP DELAY*** setting defines the inverse curve time delay multiplier (D) that is used in the Voltage Elements > Overvoltage Inverse Time Curves section.
- When the PHASE OV1 CURVE setting is set to one of the FlexCurves, the ***PHASE OV1 PICKUP DELAY*** setting defines the FlexCurve time delay multiplier (D) that is used in the following curve equation:

$$T = D \times \text{FlexCurve time at } (V/Vpkp)$$

For FlexCurves configuration instructions, see the ***System Setup > FlexCurves*** section.

PHASE OV1 RESET DELAY

When the Curve setting is set to Definite Time or Inverse Time, the element resets when applied voltage goes below the dropout voltage for the duration of the selected ***RESET DELAY*** setting.

When the Curve setting is set to one of the FlexCurves, the element reset is based on the equation and not the ***PHASE OV1 RESET DELAY*** setting.

As shown in the equation, the multiple of pickup value that defines the point on the FlexCurve characteristic is derived from the ratio of the measured voltage to the set pickup. For example, if Pickup is set to 1.1 pu when the measured voltage is 1.3 pu, the ratio is 1.3/1.1 = 1.2. Therefore, in FlexCurve, the corresponding operate time is at 1.2 x PKP (not at 1.3 x PKP). On the other hand, when measured voltage is 1 pu, the ratio is 1/1.1 = 0.9. Therefore, in FlexCurve, the corresponding reset time is at 0.9 x PKP.

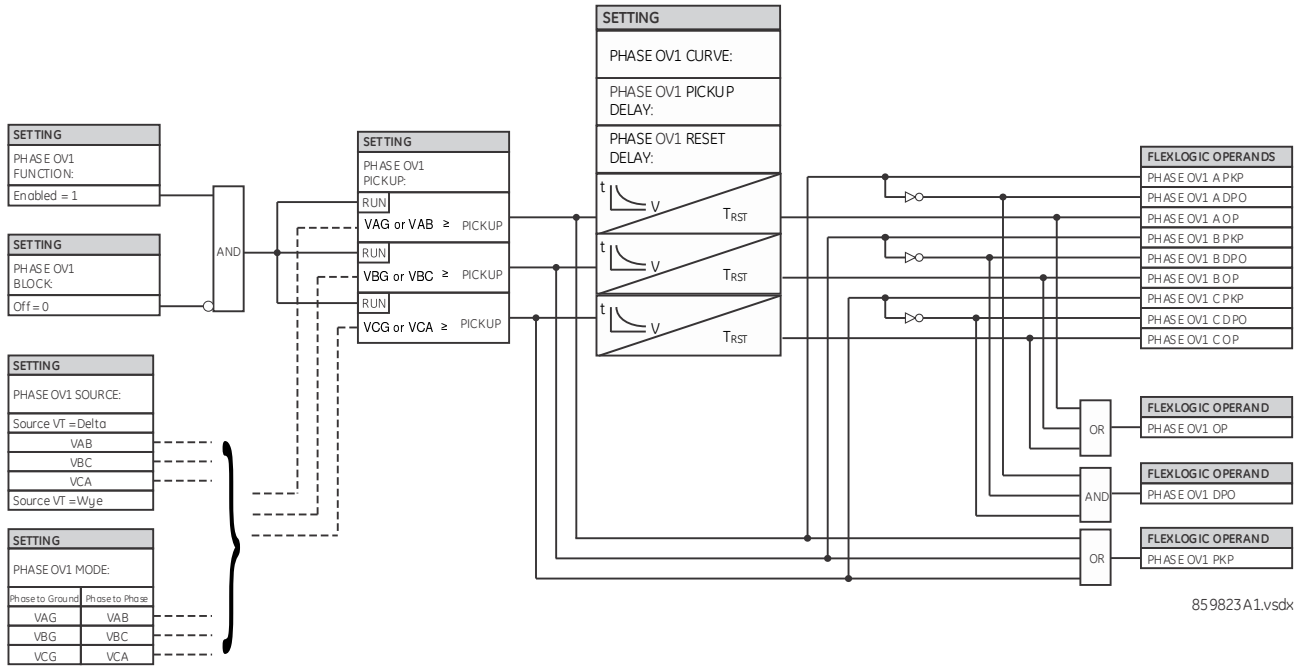

Figure 321: Phase overvoltage logic

9.7.13.6 NEUTRAL OVERVOLTAGE (ANSI 59N, IEC PTOV)

SETTINGS > GROUPED ELEMENTS > SETTING GROUP 1(6) > VOLTAGE ELEMENTS > NEUTRAL OVERVOLTAGE<n>

> *Note:*
> *Only Neutral overvoltage 1 is shown*

■ NEUTRAL OV1 ■	⇔	NEUTRAL OV1 FUNCTION: Disabled	Range: Disabled, Enabled
	⇕	NEUTRAL OV1 SIGNAL SOURCE: SRC 1	Range: SRC <n>
	⇕	NEUTRAL OV1 PICKUP: 0.300 pu	Range: 0.004 to 3.000 pu in steps of 0.001
	⇕	NEUTRAL OV1 CURVE: Definite Time	Range: Definite Time, FlexCurve A, FlexCurve B, FlexCurve C
	⇕	NEUTRAL OV1 PICKUP: DELAY: 1.00 s	Range: 0.00 to 600.00 s in steps of 0.01
	⇕	NEUTRAL OV1 RESET: DELAY: 1.00 s	Range: 0.00 to 600.00 s in steps of 0.01
	⇕	NEUTRAL OV1 BLOCK: Off	Range: FlexLogic operand

⇕	NEUTRAL OV1 TARGET: Self-reset	Range: Self-reset, Latched, Disabled
⇧	NEUTRAL OV1 EVENTS: Disabled	Range: Disabled, Enabled

The neutral overvoltage element is used to detect asymmetrical system voltage condition due to a ground fault or to the loss of one or two phases of the source. The element responds to the system neutral voltage (3V_0), calculated from the phase voltages. The nominal secondary voltage of the phase voltage channels entered under ***SETTINGS > SYSTEM SETUP > AC INPUTS > VOLTAGE BANK > PHASE VT SECONDARY*** is the p.u. base used when setting the pickup level.

The neutral overvoltage element can provide a time-delayed operating characteristic versus the applied voltage (initialized from FlexCurves A, B, or C) or be used as a definite time element. The ***NEUTRAL OV1 PICKUP DELAY*** setting applies only if the ***NEUTRAL OV1 CURVE*** setting is `Definite Time`. The source assigned to this element must be configured for a phase VT.

VT errors and normal voltage unbalance must be considered when setting this element. This function requires the VTs to be wye-connected.

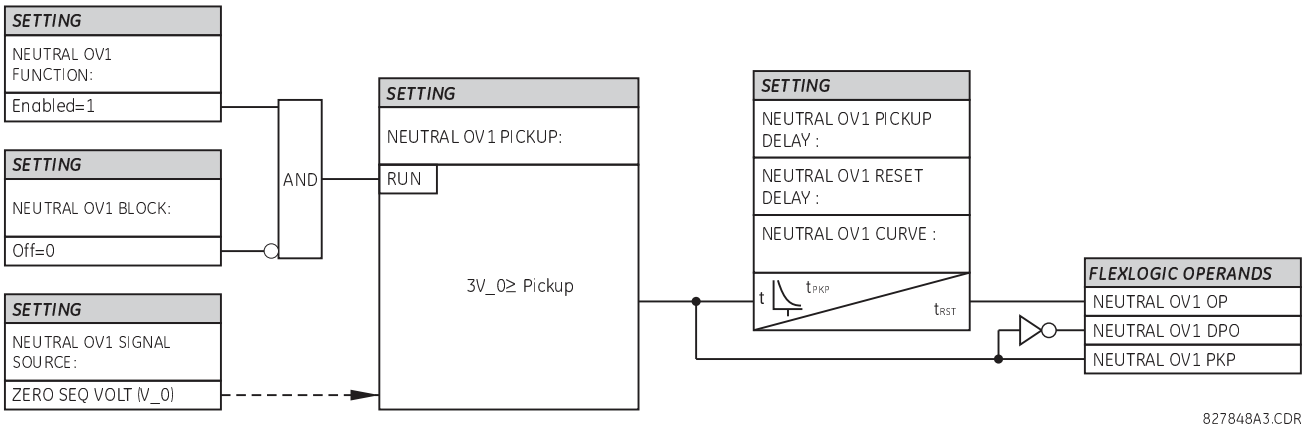

Figure 322: Neutral overvoltage1 logic

9.7.13.7 NEGATIVE-SEQUENCE OVERVOLTAGE (ANSI 59Q, IEC PTOV)

SETTINGS > GROUPED ELEMENTS > SETTING GROUP 1(6) > VOLTAGE ELEMENTS > NEG SEQ OV<n>

> *Note:*
> *Only Neg Seq OV 1 is shown*

■ NEG SEQ OV1
■

⇔	NEG SEQ OV1 FUNCTION: Disabled	Range: Disabled, Enabled
⇕	NEG SEQ OV 1 SIGNAL SOURCE: SRC 1	Range: SRC <n>
⇕	NEG SEQ OV 1 PICKUP: 0.300 pu	Range: 0.004 to 1.250 pu in steps of 0.00
⇕	NEG SEQ OV 1 PICKUP DELAY: 0.50 s	Range: 0.00 to 600.00 s in steps of 0.01
⇕	NEG SEQ OV 1 RESET DELAY: 0.50 s	Range: 0.00 to 600.00 s in steps of 0.01

⇕	NEG SEQ OV 1 BLOCK: Off	Range: FlexLogic operand
⇕	NEG SEQ OV 1 TARGET: Self-reset	Range: Self-reset, Latched, Disabled
⇧	NEG SEQ OV 1 EVENTS: Disabled	Range: Disabled, Enabled

Use the negative-sequence overvoltage element to detect loss of one or two phases of the source, a reversed phase sequence of voltage, or a non-symmetrical system voltage condition.

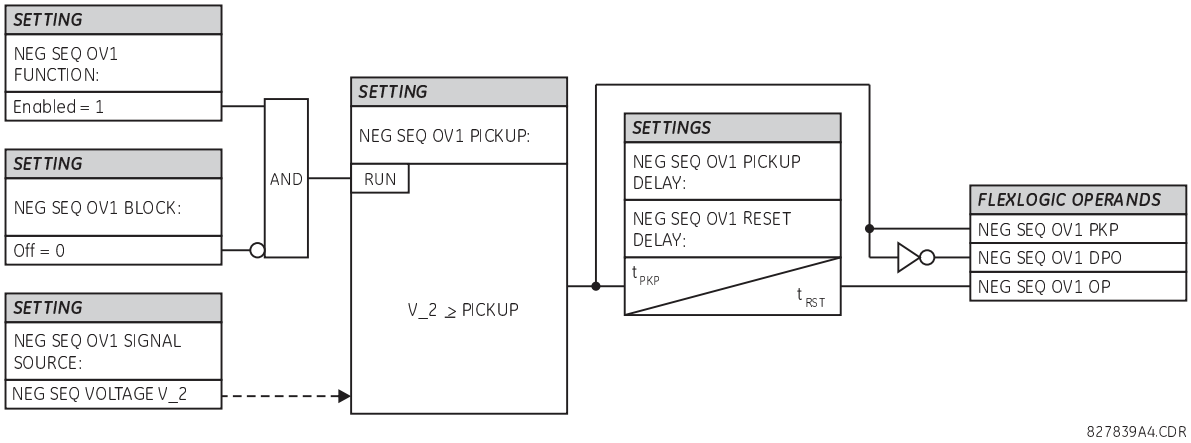

Figure 323: Negative-sequence overvoltage logic

9.7.13.8 AUXILIARY UNDERVOLTAGE (ANSI 27X, IEC PTUV)

SETTINGS > GROUPED ELEMENTS > SETTING GROUP 1(6) > VOLTAGE ELEMENTS > AUXILIARY UNDERVOLTAGE<n>

> *Note:*
> *Only Auxiliary undervoltage 1 is shown*

■ AUXILIARY UV1
■

⇔	AUX UV1 FUNCTION: Disabled	Range: Disabled, Enabled
⇕	AUX UV1 SIGNAL SOURCE: SRC 1	Range: SRC <n>
⇕	AUX UV1 PICKUP: 0.700 pu	Range: 0.004 to 3.000 pu in steps of 0.001
⇕	AUX UV1 CURVE: Definite Time	Range: Definite Time, Inverse Time, FlexCurves A through D
⇕	AUX UV1 DELAY: 1.00 s	Range: 0.00 to 600.00 s in steps of 0.01
⇕	AUX UV1 RESET DELAY: 1.00 s	Range: 0.00 to 600.00 s in steps of 0.01
⇕	AUX UV1 MINIMUM VOLTAGE: 0.100 pu	Range: 0.000 to 3.000 pu in steps of 0.001
⇕	AUX UV1 BLOCK: Off	Range: FlexLogic operand

⇕	AUX UV1 TARGET: Self-reset	Range: Self-reset, Latched, Disabled
⇧	AUX UV1 EVENTS: Disabled	Range: Disabled, Enabled

This element monitors undervoltage conditions of the auxiliary voltage.

AUX UV1 SIGNAL SOURCE

Selects the signal source for the auxiliary undervoltage protection element.

AUX UV1 PICKUP

This setting specifies auxiliary undervoltage protection element pickup level in per unit values. The nominal secondary voltage of the auxiliary voltage channel entered under ***SETTINGS > SYSTEM SETUP > AC INPUTS > VOLTAGE BANK X5 > AUXILIARY VT X5 SECONDARY*** is the per-unit base used when setting the pickup level.

AUX UV1 CURVE

This setting defines the timing characteristic of the element, which can be: Definite Time, Inverse Time (per the curves described in the **Voltage Elements > Undervoltage Inverse Time Curves** section), FlexCurves A through D. The timing characteristic depends on this setting and the Delay setting that follows.

AUX UV1 DELAY

This setting defines the operation time of the element.

- When the ***AUX UV1 CURVE*** setting is set to Definite Time, the ***AUX UV1 DELAY*** setting defines definite time delay for element operation.
- When the ***AUX UV1 CURVE*** setting is set to Inverse Time curve, the ***AUX UV1 DELAY*** setting defines the inverse curve time delay multiplier (D) that is used in the curve equation explained in the **Voltage Elements > Undervoltage Inverse Time Curves** section.
- When the ***AUX UV1 CURVE*** setting is set to one of the FlexCurves, the ***AUX UV1 DELAY*** setting defines FlexCurve time delay multiplier (D), that is used in the following curve equation:

$$T = D \times \text{FlexCurve time at } (Vpkp / V)$$

For FlexCurves configuration instructions, see the **System Setup > FlexCurves** section.

AUX UV1 RESET DELAY

When the Curve setting is set to Definite Time or Inverse Time, the element resets when applied voltage exceeds the dropout voltage for the duration of the selected RESET DELAY setting.

When the Curve setting is set to one of the FlexCurves, the element reset is based on the equation and not the ***AUX UV1 RESET DELAY*** setting.

As shown in the equation, because the element is supposed to operate in undervoltage condition, the multiple of pickup value that defines the point on the FlexCurve characteristic is derived from the ratio of the set pickup value to the measured voltage (and not the reverse). For example, if the Pickup is set to 0.9 pu, when the measured voltage is 0.82 pu, the ratio is 0.9/0.82 = 1.1. Therefore, in the FlexCurve, the corresponding operate time is at 1.1 x PKP (not at 0.82 x PKP). On the other hand, when measured voltage is 1 pu, the ratio is 0.9/1 = 0.9. Therefore, in the FlexCurve, the corresponding reset time is at 0.9 x PKP.

AUX UV1 DELAY

Selects the minimum operating time of the auxiliary undervoltage element.

AUX UV1 RESET DELAY

The element resets if the applied voltage exceeds the dropout voltage for the duration of the selected RESET DELAY setting.

AUX UV1 MINIMUM VOLTAGE

Selects the operating voltage below which the element is blocked.

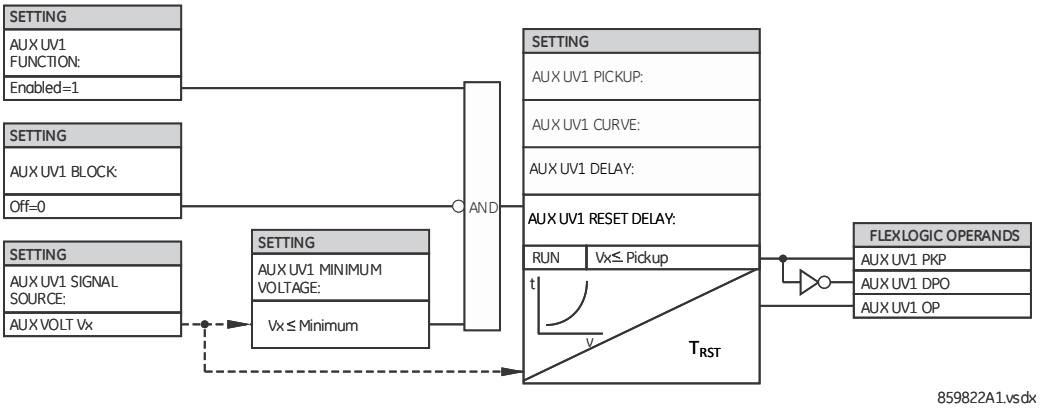

Figure 324: Auxiliary undervoltage logic

9.7.13.9 AUXILIARY OVERVOLTAGE (ANSI 59X, IEC PTOV)

SETTINGS > GROUPED ELEMENTS > SETTING GROUP 1(6) > VOLTAGE ELEMENTS > AUXILIARY OVERVOLTAGE<n>

> *Note:*
> *Only Auxiliary overvoltage 1 is shown*

■ AUX OV1 ■	⇔	AUX OV1 FUNCTION: Disabled	Range: Disabled, Enabled
	⇕	PHASE OV1 SIGNAL SOURCE: SRC 1	Range: SRC <n>
	⇕	AUX OV1 PICKUP: 0.300 pu	Range: 0.004 to 3.000 pu in steps of 0.001
	⇕	AUX OV1 CURVE: Definite Time	Range: Definite Time, Inverse Time, FlexCurves A through D
	⇕	AUX OV1 PICKUP DELAY: 1.00 s	Range: 0.00 to 600.00 s in steps of 0.01
	⇕	AUX OV1 RESET DELAY: 1.00 s	Range: 0.00 to 600.00 s in steps of 0.01
	⇕	AUX OV1 BLOCK: Off	Range: FlexLogic operand
	⇕	AUX OV1 TARGET: Self-reset	Range: Self-reset, Latched, Disabled
	⇑	AUX OV1 EVENTS: Disabled	Range: Disabled, Enabled

This element is intended for monitoring overvoltage conditions of the auxiliary voltage. Monitoring the neutral voltage supplied from an open-delta VT connection is a typical application for this element.

AUX OV1 SIGNAL SOURCE

Selects the signal source for the auxiliary overvoltage protection element.

AUX OV1 PICKUP

This setting specifies auxiliary overvoltage protection element pickup level in per-unit values.

The nominal secondary voltage of the auxiliary voltage channel entered under ***SYSTEM SETUP > AC INPUTS > VOLTAGE BANK X5 > AUXILIARY VT SECONDARY*** is the per-unit base used when setting the pickup level.

AUX OV1 CURVE

This setting defines the timing characteristic of the element, which can be: Definite Time, Inverse Time (per the curves described in the **Voltage Elements > Overvoltage Inverse Time Curves** section), FlexCurves A through D. The timing characteristic depends on this setting and the Pickup Delay setting that follows.

AUX OV1 PICKUP DELAY

This setting defines the operation time of the element.

- When the ***AUX OV1 CURVE*** setting is set to Definite Time, the ***AUX OV1 PICKUP DELAY*** setting defines definite time delay for element operation.
- When the ***AUX OV1 CURVE*** setting is set to Inverse Time, the ***AUX OV1 PICKUP DELAY*** setting defines inverse curve time delay multiplier (D), that is used in the Voltage Elements > Overvoltage Inverse Time Curves section.
- When the ***AUX OV1 CURVE*** setting is set to one of the FlexCurves, the ***AUX OV1 PICKUP DELAY*** setting defines the FlexCurve time delay multiplier (D) that is used in the following equation:

$$T = D \times \text{FlexCurve time at } (V/Vpkp)$$

For FlexCurves configuration instructions, see the **System Setup > FlexCurves** section.

AUX OV1 RESET DELAY

- When the Curve setting is set to Definite Time or Inverse Time, the element resets when applied voltage goes below the dropout voltage for the duration of the selected ***RESET DELAY*** setting.
- When the Curve setting is set to one of the FlexCurves, the elements reset is based on the equation and not the ***AUX OV1 RESET DELAY*** setting.

As shown in the equation, the multiple of pickup value that defines the point on the FlexCurve characteristic is derived from the ratio of the measured voltage to the set pickup. For example, if Pickup is set to 1.1 pu, when measured voltage is 1.3 pu, the ratio is 1.3/1.1 = 1.2. Therefore, in the FlexCurve, the corresponding operate time is at 1.2 x PKP (not at 1.3 x PKP). On the other hand, when measured voltage is 1 pu, the ratio is 1/1.1 = 0.9. Therefore, in the FlexCurve, the corresponding reset time is at 0.9 x PKP.

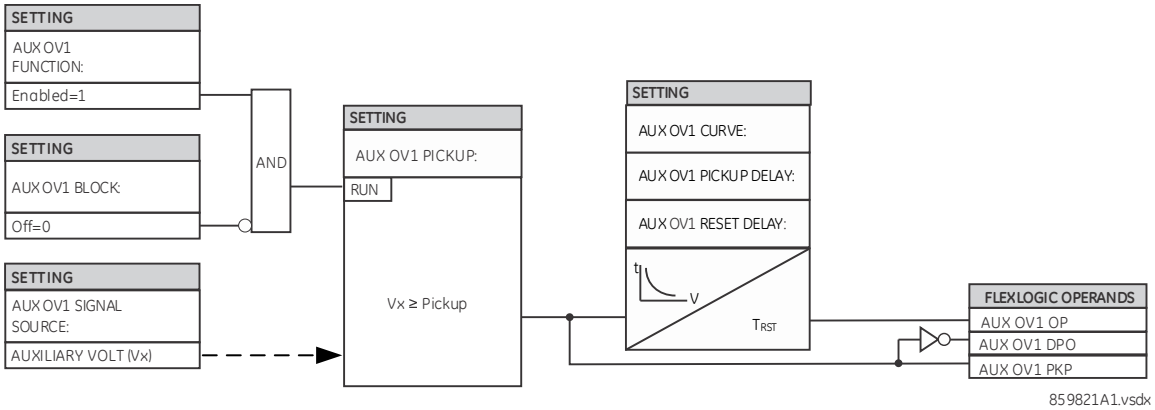

Figure 325: Auxiliary overvoltage logic

9.7.13.10 COMPENSATED OVERVOLTAGE (ANSI 59C, IEC PTOV)

SETTINGS > GROUPED ELEMENTS > SETTING GROUP 1(6) > VOLTAGE ELEMENTS > COMPENSATED OVERVOLTAGE

■ COMPENSATED ■ OVERVOLTAGE	⇔ COMPENSATED OV FUNCTION: Disabled	Range: Disabled, Enabled
	⇕ COMPENSATED OV SOURCE: SRC 1	Range: SRC <n>
	⇕ COMPENSATED OV Zc MAG: 2.00 ohm	Range: 0.00 to 500.00 ohms in steps of 0.01
	⇕ COMPENSATED OV Zc ANG: 90°	Range: 30 to 90° in steps of 1
	⇕ COMPENSATED OV I_1max: 0.20 pu	Range: 0.01 to 1.00 pu in steps of 0.01
	⇕ COMPENSATED OV STG1 PKP: 1.300 pu	Range: 0.250 to 3.000 pu in steps of 0.01
	⇕ COMPENSATED OV STG1 DELAY: 1.00 sec	Range: 0.00 to 600.00 seconds in steps of 0.01
	⇕ COMPENSATED OV STG2 PKP: 1.300 pu	Range: 0.250 to 3.000 pu in steps of 0.01
	⇕ COMPENSATED OV STG2 DELAY: 1.00 sec	Range: 0.00 to 600.00 seconds in steps of 0.01
	⇕ COMPENSATED OV STG3 PKP: 1.300 pu	Range: 0.250 to 3.000 pu in steps of 0.01
	⇕ COMPENSATED OV STG3 DELAY: 1.00 sec	Range: 0.00 to 600.00 seconds in steps of 0.01
	⇕ COMPENSATED OV BLK: Off	Range: FlexLogic operand
	⇕ COMPENSATED OV TARGET: Self-reset	Range: Self-reset, Latched, Disabled
	⇧ COMPENSATED OV EVENTS: Disabled	Range: Disabled, Enabled

The compensated overvoltage function provides protection against an overvoltage due to the opening of the remote terminal of a transmission line—the so called the Ferranti effect. This can be achieved using a transfer-tripping scheme. However, with high voltage, more corona can exist on the line and inhibit the proper reception of a carrier-transfer-trip signal. Also, the presence of a line with an open terminal in weak systems can raise the voltage level of the local bus. Detecting and tripping a line with an open terminal can prevent tripping at the local bus in this case.

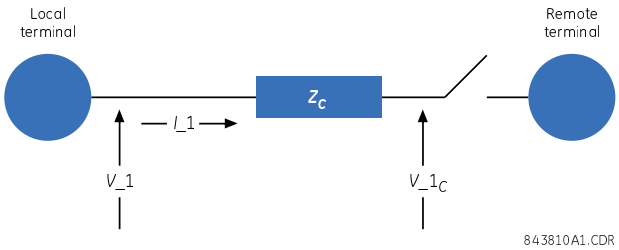

Figure 326: Transmission line with remote terminal open

Figure 327: Phasor diagram

The function approximates the voltage rise at the far end of the transmission line according to the following relationship:

$$V_1_C(pu) = \left| \frac{V_1 - I_1 \times Z_{C_mag} \times e^{j(Z_{C_ang})}}{V_{nominal}} \right|$$

where

- V_1 is the positive-sequence voltage (phasor quantity) in secondary volts measured at the local terminal
- I_1 is the positive-sequence current (phasor quantity) in secondary amps measured at the local terminal
- $V_{nominal}$ is the phase VT secondary setting in the case of wye VTs and the phase VT secondary setting divided by in the case of delta VTs
- ZC_{mag} and ZC_{ang} represent an impedance between the local and remote terminals
- V_1_C is the calculated positive-sequence voltage magnitude at the remote terminal

If the magnitude of Z_C is set to one-half the series impedance of the line ($R + jX_L$), the compensated voltage is approximately equal to the positive-sequence voltage at the remote end of the line. A more accurate setting of Z_C can be made if the positive-sequence charging current and the voltages at the local and remote line ends resulting from an open breaker are known. In this case, the required reach setting is:

$$Z_c = (V_{local} - V_{remote})/I_{charge}$$

The following settings are available.

COMPENSATED OV Zc MAG

This setting specifies the magnitude of the impedance Z_C in secondary ohms. Set it to half the positive-sequence series impedance of the line. Alternately, if the positive-sequence charging currents and local and remote voltages are known, then this value can be calculated from equation above.

COMPENSATED OV Zc ANG

This setting specifies the angle of the impedance Z_C in degrees.

COMPENSATED OV I_1max

This setting specifies the maximum expected positive-sequence line current for which a remote overvoltage is anticipated.

COMPENSATED OV STG1 PKP, COMPENSATED OV STG2 PKP, COMPENSATED OV STG3 PKP

These settings specify the pickup level for each of the three stages. If any stage is set with no intentional time delay, then set the pickup setting 15% above the anticipated steady state overvoltage to prevent an operation during line energization. A stage that is not used can be set to its maximum setting value (3.000 pu) to effectively disable it.

COMPENSATED OV STG1 DELAY, COMPENSATED OV STG2 DELAY, COMPENSATED OV STG3 DELAY

These settings specify the time delay for each of the three stages in seconds.

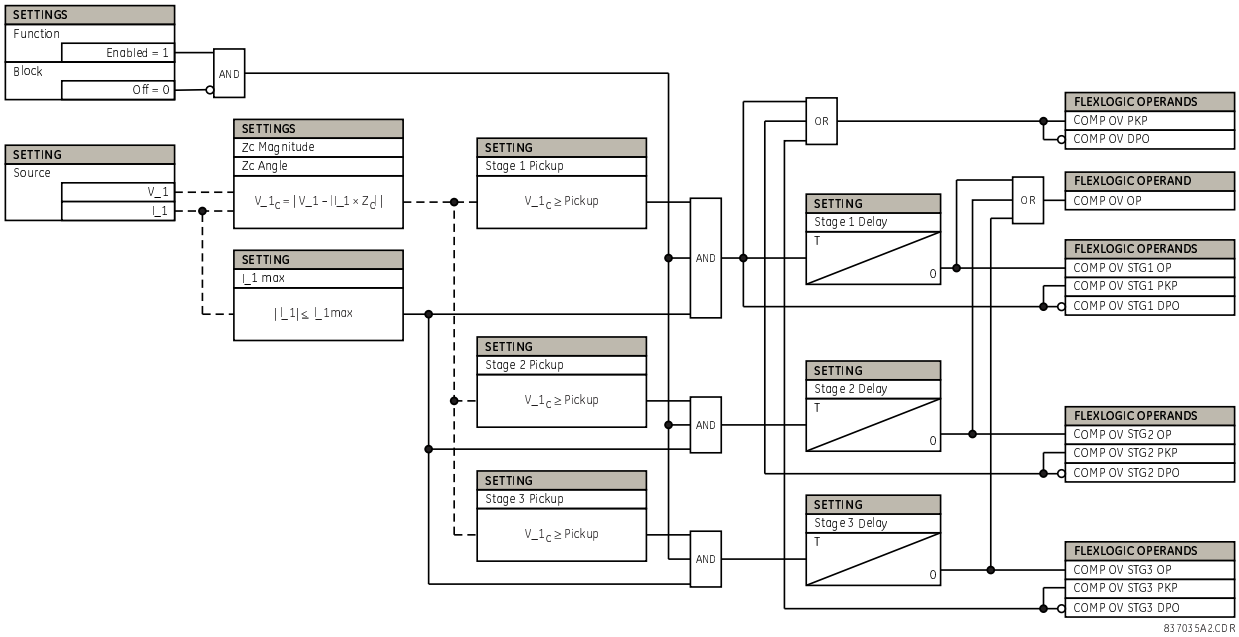

Figure 328: Compensated overvoltage logic

9.7.14 POWER

SETTINGS > GROUPED ELEMENTS > SETTING GROUP 1(6) > POWER

■ POWER ■	⇔	■ SENSITIVE ■ DIRECTIONAL POWER	C60, C95, D60, F60, G30, G60, L90, N60, T60
	⇧	■ UNDERPOWER ■	M60 only

9.7.14.1 SENSITIVE DIRECTIONAL POWER (ANSI 32)

SETTINGS > GROUPED ELEMENTS > SETTING GROUP 1(6) > VOLTAGE ELEMENTS > POWER > SENSITIVE DIRECTIONAL POWER > DIRECTIONAL POWER 1(2)

> *Note:*
> *Only Directional power 1 is shown*

■ DIRECTIONAL ■ POWER 1	⇔	DIR POWER 1 FUNCTION: Disabled	Range: Disabled, Enabled
	⇧	DIR POWER 1 SOURCE: SRC 1	Range: SRC <n>
	⇧	DIR POWER 1 RCA: 0°	Range: 0 to 359° in steps of 1
	⇧	DIR POWER 1 CALIBRATION: 0.00°	0 to 0.95° in steps of 0.05
	⇧	DIR POWER 1 STG1 SMIN: 0.100 pu	Range: –3.300 to 3.300 pu in steps of 0.001
	⇧	DIR POWER 1 STG1 DELAY: 0.50 s	Range: 0.00 to 600.00 s in steps of 0.01

⇕	DIR POWER 1 STG2 SMIN: 0.100 pu	Range: –3.300 to 3.300 pu in steps of 0.001
⇕	DIR POWER 1 STG2 DELAY: 20.00 s	Range: 0.00 to 600.00 s in steps of 0.01
⇕	DIR POWER 1 BLK: Off	Range: FlexLogic operand
⇕	DIR POWER 1 TARGET: Self-reset	Range: Self-reset, Latched, Disabled
⇧	DIR POWER 1 EVENTS: Disabled	Range: Disabled, Enabled

The sensitive directional power element responds to three-phase directional power and is designed for reverse power and low forward power applications for synchronous machines or interconnections involving co-generation. The relay measures the three-phase power from either a full set of wye-connected VTs or a full set of delta-connected VTs. In the latter case, the two-wattmeter method is used. See the UR-series Metering Conventions section in chapter 6 for details regarding the active and reactive powers used by the sensitive directional power element.

The element has an adjustable characteristic angle and minimum operating power as shown in the Directional Power Characteristic diagram that follows. The element responds to the following condition:

$$P \cos \theta + Q \sin \theta > SMIN$$

where:

- P and Q are active and reactive powers as measured per the UR metering convention
- q is a sum of the element characteristic (***DIR POWER 1 RCA***) and calibration (***DIR POWER 1 CALIBRATION***) angles
- SMIN is the minimum operating power

The operating quantity is displayed in the ***ACTUAL VALUES > METERING > SENSITIVE DIRECTIONAL POWER 1(2)*** actual value. The element has two independent (as to the pickup and delay settings) stages for alarm and trip, respectively.

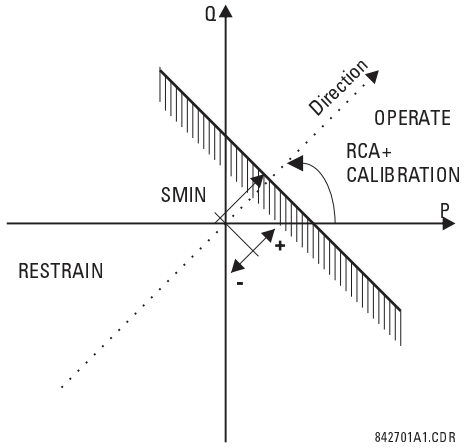

Figure 329: Directional power characteristic

By making the characteristic angle adjustable and providing for both negative and positive values of the minimum operating power, a variety of operating characteristics can be achieved as presented in the following figure. For example, section (a) in the figure shows settings for reverse power, while section (b) shows settings for low forward power applications.

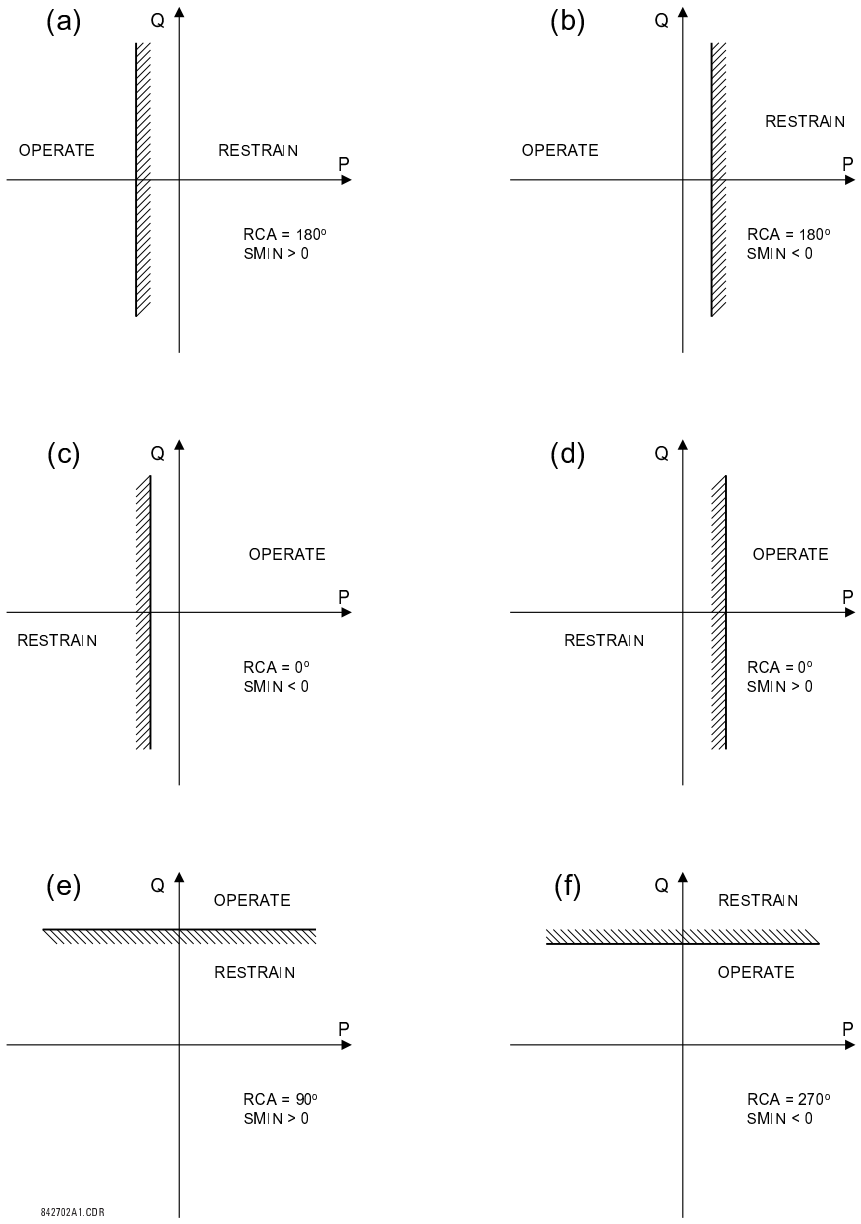

Figure 330: Directional power element sample applications

DIR POWER 1 RCA

Specifies the relay characteristic angle (RCA) for the sensitive directional power function. Application of this setting is threefold:

- It allows the element to respond to active or reactive power in any direction (active overpower/underpower, and so on)
- Together with a precise calibration angle, it allows compensation for any CT and VT angular errors to permit more sensitive settings
- It allows for required direction in situations when the voltage signal is taken from behind a delta-wye connected power transformer and the phase angle compensation is required

For example, the active overpower characteristic is achieved by setting ***DIR POWER 1 RCA*** to `0`°, reactive overpower by setting ***DIR POWER 1 RCA*** to `90`°, active underpower by setting ***DIR POWER 1 RCA*** to `180`°, and reactive underpower by setting ***DIR POWER 1 RCA*** to `270`°.

DIR POWER 1 CALIBRATION

This setting allows the relay characteristic angle to change in steps of 0.05°. This is useful when a small difference in VT and CT angular errors is to be compensated to permit more sensitive settings. This setting virtually enables calibration of the directional power function in terms of the angular error of applied VTs and CTs. The element responds to the sum of the ***DIR POWER 1 RCA*** and ***DIR POWER 1 CALIBRATION*** settings.

DIR POWER 1 STG1 SMIN

This setting specifies the minimum power as defined along the relay characteristic angle (RCA) for the stage 1 of the element. The positive values imply a shift towards the operate region along the RCA line; the negative values imply a shift towards the restrain region along the RCA line. See the Directional Power Sample Applications figure for details. Together with the RCA, this setting enables a wide range of operating characteristics. This setting applies to three-phase power and is entered in per-unit (pu) values. The base quantity is 3 x VT pu base x CT pu base for wye connected VTs, and √3 x VT pu base x CT pu base for delta connected VTs.

For example, a setting of 2% for a 200 MW machine is 0.02 x 200 MW = 4 MW. If 13.8kV is line voltage and 10 kA is a primary CT current, the source pu quantity is 239 MVA, and thus, SMIN needs to be set at 4 MW / 239 MVA = 0.0167 pu ≈ 0.017 pu. If the reverse power application is considered, RCA = 180° and SMIN = 0.017 pu.

The element drops out if the magnitude of the positive-sequence current becomes virtually zero, that is, it drops below the cutoff level.

DIR POWER 1 STG1 DELAY

This setting specifies a time delay for stage 1. For reverse power or low forward power applications for a synchronous machine, stage 1 is typically applied for alarming and stage 2 for tripping.

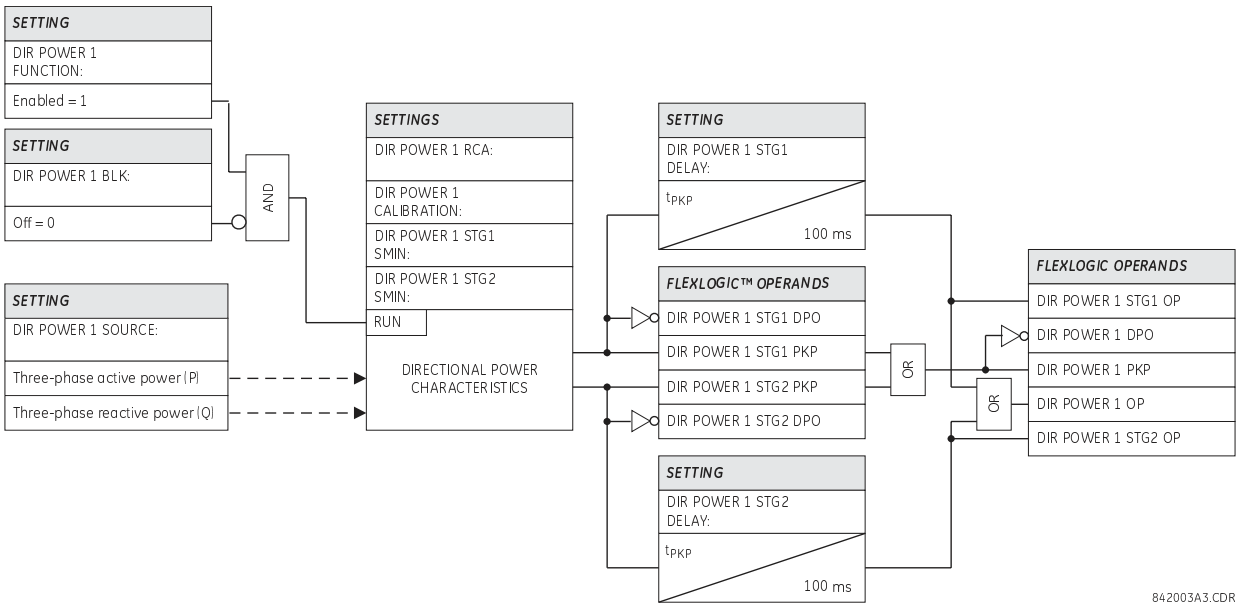

Figure 331: Sensitive directional power logic

9.8 CONTROL ELEMENTS

Control elements are used for control rather than protection. See the Introduction to Elements section at the beginning of this chapter for information.

9.8.1 TRIP BUS

Setting path: ***SETTINGS > CONTROL ELEMENTS > TRIP BUS > TRIP BUS 1(6)***

■ TRIP BUS 1 ■	⇔	TRIP BUS 1 FUNCTION: Disabled	Range: Enabled, Disabled
	⇕	TRIP BUS 1 BLOCK: Off	Range: FlexLogic operand
	⇕	TRIP BUS 1 PICKUP DELAY: 0.00 s	Range: 0.00 to 600.00 s in steps of 0.01
	⇕	TRIP BUS 1 RESET DELAY: 0.00 s	Range: 0.00 to 600.00 s in steps of 0.01
	⇕	TRIP BUS 1 INPUT 1(16): Off	Range: FlexLogic operand
	⇕	TRIP BUS 1 LATCHING: Disabled	Range: Enabled, Disabled
	⇕	TRIP BUS 1 RESET: Off	Range: FlexLogic operand
	⇕	TRIP BUS 1: TARGET: Self-reset	Range: Self-reset, Latched, Disabled
	⇧	TRIP BUS 1 EVENTS: Disabled	Range: Enabled, Disabled

The trip bus element allows aggregating outputs of protection and control elements without using FlexLogic and assigning them a simple and effective manner. Each trip bus can be assigned for either trip or alarm actions. Simple trip conditioning such as latch, delay, and seal-in delay are available.

The easiest way to assign element outputs to a trip bus is through the EnerVista software under **Settings > Protection Summary**. Navigate to a specific protection or control protection element and check the bus box by hovering over the blank check box and selecting an option that displays. Once the required element is selected for a specific bus, a list of element operate-type operands are displayed and can be assigned to a trip bus. If more than one operate-type operand is required, it can be assigned directly from the trip bus menu.

Protection Summary // Quick Connect: Quick Connect Device: Settings

Save | Restore | Default | Reset | VIEW ALL mode

GROUPED ELEMENTS	TB1	TB2	TB3	TB4	TB5	GROUP 1	GROUP 2	GROUP 3	GROUP 4	GROUP 5	GROUP 6
Current Differential	☐	☐	☐	☐	☐	Disabled	Disabled	Disabled	Disabled	Disabled	Disabled
Stub Bus	☐	☐	☐	☐	☐	Disabled	Disabled	Disabled	Disabled	Disabled	Disabled
Line Pickup	☐	☐	☐	☐	☐	Disabled	Disabled	Disabled	Disabled	Disabled	Disabled
Phase Distance Z 1	☐	☐	☐	☐	☐	Disabled	Disabled	Disabled	Disabled	Disabled	Disabled
Phase Distance Z 2	☐	☐	☐	☐	☐	Disabled	Disabled	Disabled	Disabled	Disabled	Disabled
Phase Distance Z 3	☐	☐	☐	☐	☐	Disabled	Disabled	Disabled	Disabled	Disabled	Disabled
Ground Distance Z 1	☐	☐	☐	☐	☐	Disabled	Disabled	Disabled	Disabled	Disabled	Disabled
Ground Distance Z 2	☐	☐	☐	☐	☐	Disabled	Disabled	Disabled	Disabled	Disabled	Disabled
Ground Distance Z 3	☐	☐	☐	☐	☐	Disabled	Disabled	Disabled	Disabled	Disabled	Disabled
Power Swing	■	■	■	■	■	Disabled	Disabled	Disabled	Disabled	Disabled	Disabled
Load Encroachment	☐	☐	☐	☐	☐	Disabled	Disabled	Disabled	Disabled	Disabled	Disabled
Phase TOC 1	☐	☐	☐	☐	☐	Disabled	Disabled	Disabled	Disabled	Disabled	Disabled
Phase TOC 2	☐	☐	☐	☐	☐	Disabled	Disabled	Disabled	Disabled	Disabled	Disabled
Phase TOC 3	☐	☐	☐	☐	☐	Disabled	Disabled	Disabled	Disabled	Disabled	Disabled
Phase TOC 4	☐	☐	☐	☐	☐	Disabled	Disabled	Disabled	Disabled	Disabled	Disabled

Quick Connect Device

Figure 332: Trip bus fields in the protection summary

The following settings are available.

TRIP BUS 1 BLOCK

The trip bus output is blocked when the operand assigned to this setting is asserted.

TRIP BUS 1 PICKUP DELAY

This setting specifies a time delay to produce an output depending on how output is used.

TRIP BUS 1 RESET DELAY

This setting specifies a time delay to reset an output command. Set the time delay long enough to allow the breaker or contactor to perform a required action.

TRIP BUS 1 INPUT 1 to TRIP BUS 1 INPUT 16

These settings select a FlexLogic operand to be assigned as an input to the trip bus.

TRIP BUS 1 LATCHING

This setting enables or disables latching of the trip bus output. This is typically used when lockout is required or user acknowledgement of the relay response is required.

TRIP BUS 1 RESET

The trip bus output is reset when the operand assigned to this setting is asserted. Note that the RESET OP operand is pre-wired to the reset gate of the latch, As such, a reset command from the front panel interface or via communications resets the trip bus output.

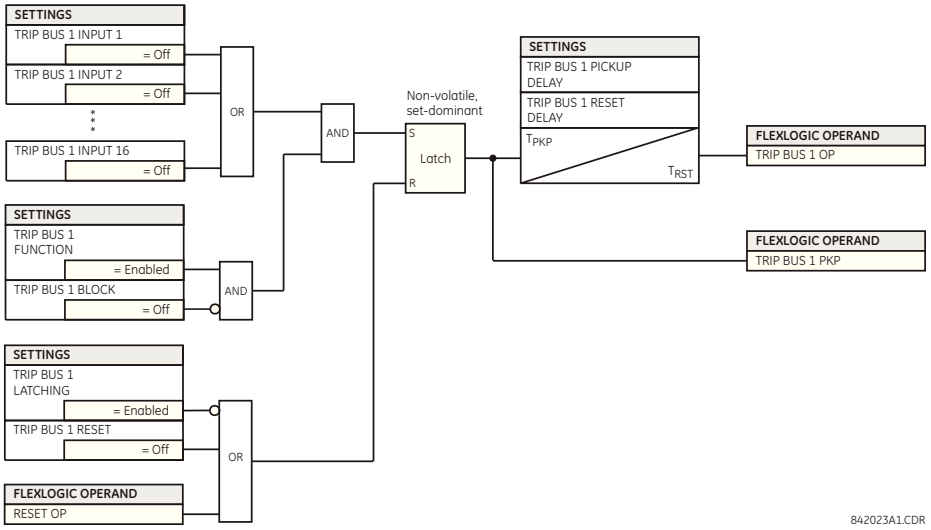

Figure 333: Trip bus logic

9.8.2 SETTING GROUPS

Setting path: ***SETTINGS > CONTROL ELEMENTS > TRIP BUS > SETTING GROUPS***

■ SETTING GROUPS ■	SETTING GROUPS FUNCTION: Disabled	Range: Enabled, Disabled
	Control Mode: Local	Range: Local, IEC61850 Client
	SETTING GROUPS BLK: Off	Range: FlexLogic operand
	GROUP 2(6) ACTIVATE ON: Off	Range: FlexLogic operand
	GROUP 1(6) NAME:	Range: up to 16 alphanumeric characters
	SETTING GROUP EVENTS: Disabled	Range: Enabled, Disabled

The setting groups menu controls the activation and deactivation of up to six groups of settings in the ***GROUPED ELEMENTS*** settings menu. The active setting group can be indicated on the front display of the Product by configuring User-Programmable LEDs to display the state of the SETTING GROUP ACT FlexLogic operands.

On a setting group change, protection elements are blocked temporarily to allow the relay to re-initialize with the new settings. The duration of the block depends on relay configuration and can last up to four cycles. The actual block duration on the group switching can be verified by the PROTSUPV operand.

SETTING GROUPS FUNCTION

When Enabled, allows setting groups other than group 1 (the default active group) to be activated. When Disabled, the default setting group is forced active. When changed from Disabled to Enabled, it resets the active setting group to 1 independent of the ***Control Mode*** setting.

Control Mode

This setting displays when IEC 61850 is used. It selects the active setting group selection control mode. When set to `Local`, active setting group selection is based on the FlexLogic operand states selected by ***GROUP ACTIVATE ON*** settings and the `SelectActiveSG` request from an IEC 61850 client generates a negative response. When set

to *IEC61850 Client*, the SelectActiveSG request from an IEC 61850 client selects the active setting group and the FlexLogic operand states of the ***GROUP ACTIVATE ON*** settings are ignored/not used.

The logic diagram shows the active setting group selection behavior based on the ***Control Mode*** setting.

When the Control Mode is *Local*, the priority scheme makes active the highest numbered group selected by the ***GROUP ACTIVATE ON*** settings. The most recent active group selection is preserved while the Product is powered down or reset.

When the Control Mode is *IEC61850 Client*, the SelectActiveSG selection has an initial value that can be set on a CID file download by the IEC 61850 setting Initial Setting Group. The most recent SelectActiveSG selection is preserved while the Product is powered down or reset. If it becomes necessary to cancel the SelectActiveSG selection without using a SelectActiveSG service request, disable the ***SETTING GROUPS FUNCTION***. This resets the SelectActiveSG selection to 1.

When the Control Mode is changed, the current active setting group selection is preserved.

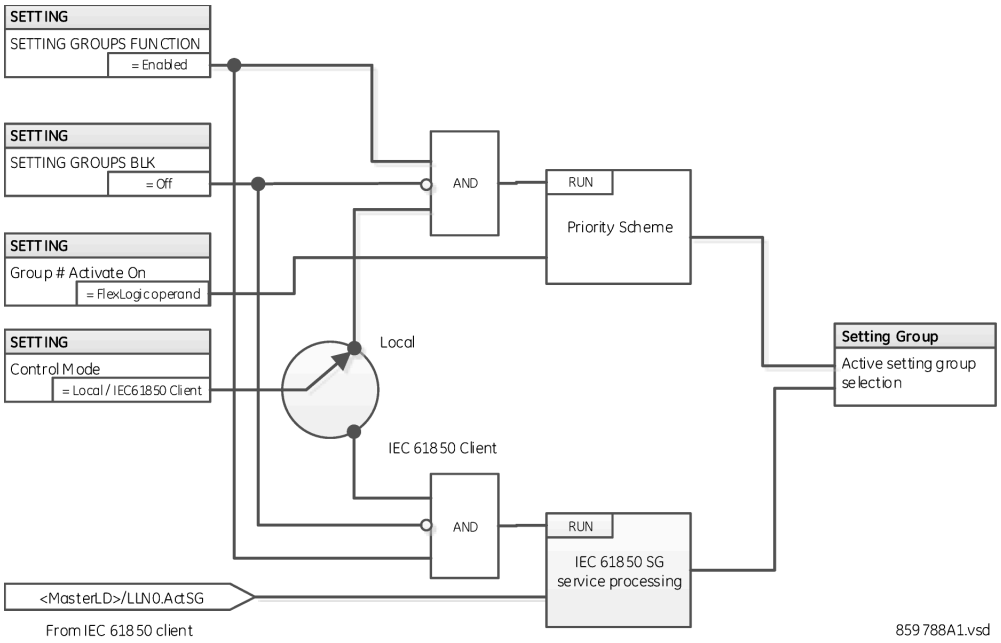

Figure 334: Logic diagram for Control Mode setting

> *Note:*
> *Active setting group selection can be made either by IEC 61850 MMS SelectActiveSG service or Local by the FlexLogic operand states selected by GROUP # ACTIVATE ON settings. Simultaneous setting group control is not permissible.*

SETTING GROUPS BLK

Prevents the active setting group from changing when the selected FlexLogic operand is *On*. This can be useful in applications where it is undesirable to change the settings under certain conditions, such as during a control sequence.

GROUP 2 ACTIVATE ON to GROUP 6 ACTIVATE ON

Selects a FlexLogic operand which, when set, makes the particular setting group active for use by any grouped element. A priority scheme ensures that only one group is active at a given time — the highest-numbered group that is activated by its **ACTIVATE ON** parameter takes priority over the lower-numbered groups. There is no activate on setting for group 1 (the default active group), because group 1 automatically becomes active if no other group is active.

The settings are read-only with default values when the ***Control Mode*** setting is set to `IEC61850 Client`.

A setting group selection can also be made by the IEC 61850 MMS service SelectActiveSG to the control block @Master/LLN0.SGCB. An active group selection can be done either by SelectActiveSG service from a IEC 61850 client or by ***GROUP ACTIVATE ON*** settings, but mixed operation is not allowed.

An initial setting group value is initialized to the ***GROUP ACTIVATE ON*** setting value on Product reboot immediately following the receipt of a valid CID file.

SETTING GROUP 1 NAME to SETTING GROUP 6 NAME

Allows the user to assign a name to each of the six settings groups. Once programmed, this name appears on the second line of the ***GROUPED ELEMENTS > SETTING GROUP 1(6)*** menu display.

The relay can be set up via a FlexLogic equation to receive requests to activate or de-activate a particular non-default settings group. The following FlexLogic equation (see the following figure) illustrates requests via remote communications (for example, VIRTUAL INPUT 1 ON) or from a local contact input (for example, CONTACT IP 1 ON) to initiate the use of a particular settings group, and requests from several overcurrent pickup measuring elements to inhibit the use of the particular settings group. The assigned VIRTUAL OUTPUT 1 operand is used to control the `On` state of a particular settings group.

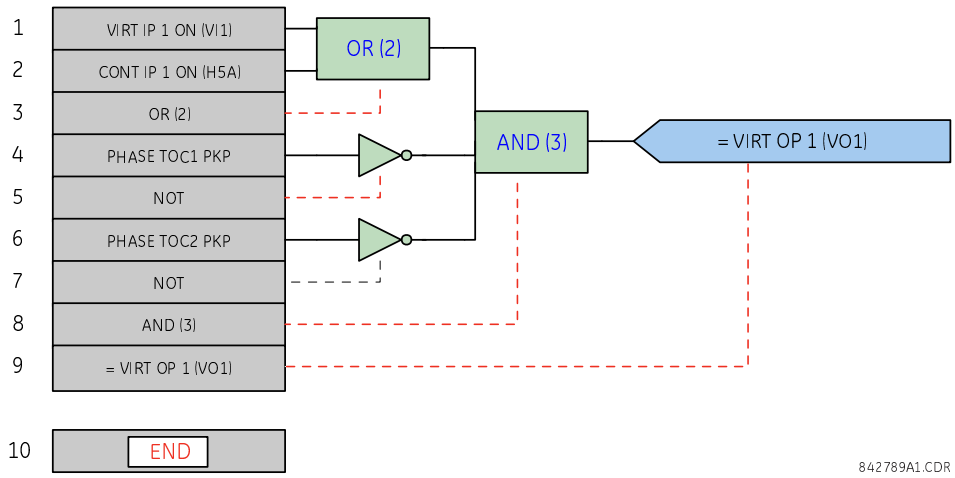

Figure 335: Example of FlexLogic control of a setting group

9.8.3 SELECTOR SWITCH

Setting path: ***SETTINGS > CONTROL ELEMENTS > SELECTOR SWITCH > SELECTOR SWITCH 1(2)***

> *Note:*
> *Only selector switch 1 is shown*

■ SELECTOR SWITCH 1 ■	⇔ SELECTOR 1 FUNCTION: Disabled	Range: Disabled, Enabled
	⇕ SELECTOR 1 FULL RANGE: 7	Range: 1 to 7 in steps of 1
	⇕ SELECTOR 1 TIME-OUT: 5.0 s	Range: 3.0 to 60.0 s in steps of 0.1
	⇕ SELECTOR 1 STEP-UP: Off	Range: FlexLogic operand
	⇕ SELECTOR 1 STEP-UP MODE: Time-out	Range: Time-out, Acknowledge

⇕	SELECTOR 1 ACK: Off	Range: FlexLogic operand
⇕	SELECTOR 1 3BIT A0: Off	Range: FlexLogic operand
⇕	SELECTOR 1 3BIT A1: Off	Range: FlexLogic operand
⇕	SELECTOR 1 3BIT A2: Off	Range: FlexLogic operand
⇕	SELECTOR 1 3BIT MODE: Time-out	Range: Time-out, Acknowledge
⇕	SELECTOR 1 3BIT ACK: Off	Range: FlexLogic operand
⇕	SELECTOR 1 POWER-UP MODE: Restore	Range: Restore, Synchronize, Sync/Restore
⇕	SELECTOR 1 TARGETS: Self-reset	Range: Self-reset, Latched, Disabled
⇧	SELECTOR 1 EVENTS: Disabled	Range: Disabled, Enabled

The selector switch element is intended to replace a mechanical selector switch. Typical applications include setting group control or control of multiple logic sub-circuits in user-programmable logic.

The element provides for two control inputs. The step-up control allows stepping through selector position one step at a time with each pulse of the control input, such as a user-programmable pushbutton. The three-bit control input allows setting the selector to the position defined by a three-bit word.

The element allows pre-selecting a new position without applying it. The pre-selected position gets applied either after time-out or upon acknowledgement via separate inputs (user setting). The selector position is stored in non-volatile memory. Upon power-up, either the previous position is restored or the relay synchronizes to the current three-bit word (user setting). Basic alarm functionality alerts the user under abnormal conditions; for example, the three-bit control input being out of range.

A selector switch runs every two power cycles.

SELECTOR 1 FULL RANGE

This setting defines the upper position of the selector. When stepping up through available positions of the selector, the upper position wraps up to the lower position (position 1). When using a direct three-bit control word for programming the selector to a desired position, the change would take place only if the control word is within the range of 1 to the ***SELECTOR FULL RANGE***. If the control word is outside the range, an alarm is established by setting the SELECTOR ALARM FlexLogic operand for three seconds.

SELECTOR 1 TIME-OUT

This setting defines the time-out period for the selector. This value is used by the relay in the following two ways. When the ***SELECTOR STEP-UP MODE*** is `Time-out`, the setting specifies the required period of inactivity of the control input after which the pre-selected position is automatically applied. When the ***SELECTOR STEP-UP MODE*** is `Acknowledge`, the setting specifies the period of time for the acknowledging input to appear. The timer is re-started by any activity of the control input. The acknowledging input must come before the ***SELECTOR 1 TIME-OUT*** timer expires; otherwise, the change does not take place and an alarm is set.

SELECTOR 1 STEP-UP

This setting specifies a control input for the selector switch. The switch is shifted to a new position at each rising edge of this signal. The position changes incrementally, wrapping up from the last (***SELECTOR 1 FULL RANGE***) to

the first (position 1). Consecutive pulses of this control operand must not occur faster than every 50 ms. After each rising edge of the assigned operand, the time-out timer is restarted and the `SELECTOR SWITCH 1: POS Z CHNG INITIATED` target message is displayed, where Z the pre-selected position. The message is displayed for the time specified by the ***FLASH MESSAGE TIME*** setting. The pre-selected position is applied after the selector times out (*`Time-out`* mode), or when the acknowledging signal appears before the element times out (*`Acknowledge`* mode). When the new position is applied, the relay displays the `SELECTOR SWITCH 1: POSITION Z IN USE` message. Typically, a user-programmable pushbutton is configured as the stepping up control input.

SELECTOR 1 STEP-UP MODE

This setting defines the selector mode of operation. When set to *`Time-out`*, the selector changes its position after a pre-defined period of inactivity at the control input. The change is automatic and does not require any explicit confirmation of the intent to change the selector's position. When set to *`Acknowledge`*, the selector changes its position only after the intent is confirmed through a separate acknowledging signal. If the acknowledging signal does not appear within a pre-defined period of time, the selector does not accept the change and an alarm is established by setting the SELECTOR STP ALARM output FlexLogic operand for three seconds.

SELECTOR 1 ACK

This setting specifies an acknowledging input for the stepping up control input. The pre-selected position is applied on the rising edge of the assigned operand. This setting is active only under *`Acknowledge`* mode of operation. The acknowledging signal must appear within the time defined by the ***SELECTOR 1 TIME-OUT*** setting after the last activity of the control input. A user-programmable pushbutton is typically configured as the acknowledging input.

SELECTOR 1 3BIT A0, A1, and A2

These settings specify a three-bit control input of the selector. The three-bit control word pre-selects the position using the following encoding convention:

A2	A1	A0	Position
0	0	0	rest
0	0	1	1
0	1	0	2
0	1	1	3
1	0	0	4
1	0	1	5
1	1	0	6
1	1	1	7

The *`rest`* position (0, 0, 0) does not generate an action and is intended for situations when the device generating the three-bit control word is having a problem. When ***SELECTOR 1 3BIT MODE*** is *`Time-out`*, the pre-selected position is applied in ***SELECTOR 1 TIME-OUT*** seconds after the last activity of the three-bit input. When ***SELECTOR 1 3BIT MODE*** is *`Acknowledge`*, the pre-selected position is applied on the rising edge of the ***SELECTOR 1 3BIT ACK*** acknowledging input.

The stepping up control input (***SELECTOR 1 STEP-UP***) and the three-bit control inputs (***SELECTOR 1 3BIT A0*** through ***A2***) lock-out mutually: once the stepping up sequence is initiated, the three-bit control input is inactive; once the three-bit control sequence is initiated, the stepping up input is inactive.

SELECTOR 1 3BIT MODE

This setting defines the selector mode of operation. When set to *`Time-out`*, the selector changes its position after a pre-defined period of inactivity at the control input. The change is automatic and does not require explicit confirmation to change the selector position. When set to *`Acknowledge`*, the selector changes its position only after confirmation via a separate acknowledging signal. If the acknowledging signal does not appear within a pre-defined

period of time, the selector rejects the change and an alarm established by invoking the SELECTOR BIT ALARM FlexLogic operand for three seconds.

SELECTOR 1 3BIT ACK

This setting specifies an acknowledging input for the three-bit control input. The pre-selected position is applied on the rising edge of the assigned FlexLogic operand. This setting is active only under the `Acknowledge` mode of operation. The acknowledging signal must appear within the time defined by the ***SELECTOR TIME-OUT*** setting after the last activity of the three-bit control inputs. Note that the stepping up control input and three-bit control input have independent acknowledging signals (SELECTOR 1 ACK and SELECTOR 1 3BIT ACK, accordingly).

SELECTOR 1 POWER-UP MODE

This setting specifies the element behavior on power up of the relay.

When set to `Restore`, the last position of the selector (stored in the non-volatile memory) is restored after powering up the relay. If the position restored from memory is out of range, position 0 (no output operand selected) is applied and an alarm is set (***SELECTOR 1 PWR ALARM***).

When set to `Synchronize`, the selector switch acts as follows. For two power cycles, the selector applies position 0 to the switch and activates ***SELECTOR 1 PWR ALARM***. After two power cycles expire, the selector synchronizes to the position dictated by the three-bit control input. This operation does not wait for time-out or the acknowledging input. When the synchronization attempt is unsuccessful (that is, the three-bit input is not available (0,0,0) or out of range), then the selector switch output is set to position 0 (no output operand selected) and an alarm is established (***SELECTOR 1 PWR ALARM***).

The operation of `Synch/Restore` mode is similar to the `Synchronize` mode. The only difference is that after an unsuccessful synchronization attempt, the switch attempts to restore the position stored in the relay memory. The `Synch/Restore` mode is useful for applications where the selector switch is employed to change the setting group in redundant (two relay) protection schemes.

SELECTOR 1 EVENTS

If enabled, the following events are logged:

Event name	Description
SELECTOR 1 POS Z	Selector 1 changed its position to Z
SELECTOR 1 STP ALARM	The selector position pre-selected via the stepping up control input has not been confirmed before the time out
SELECTOR 1 BIT ALARM	The selector position pre-selected via the three-bit control input has not been confirmed before the time out

The following figures illustrate the operation of the selector switch. In these diagrams, “T” represents a time-out setting:

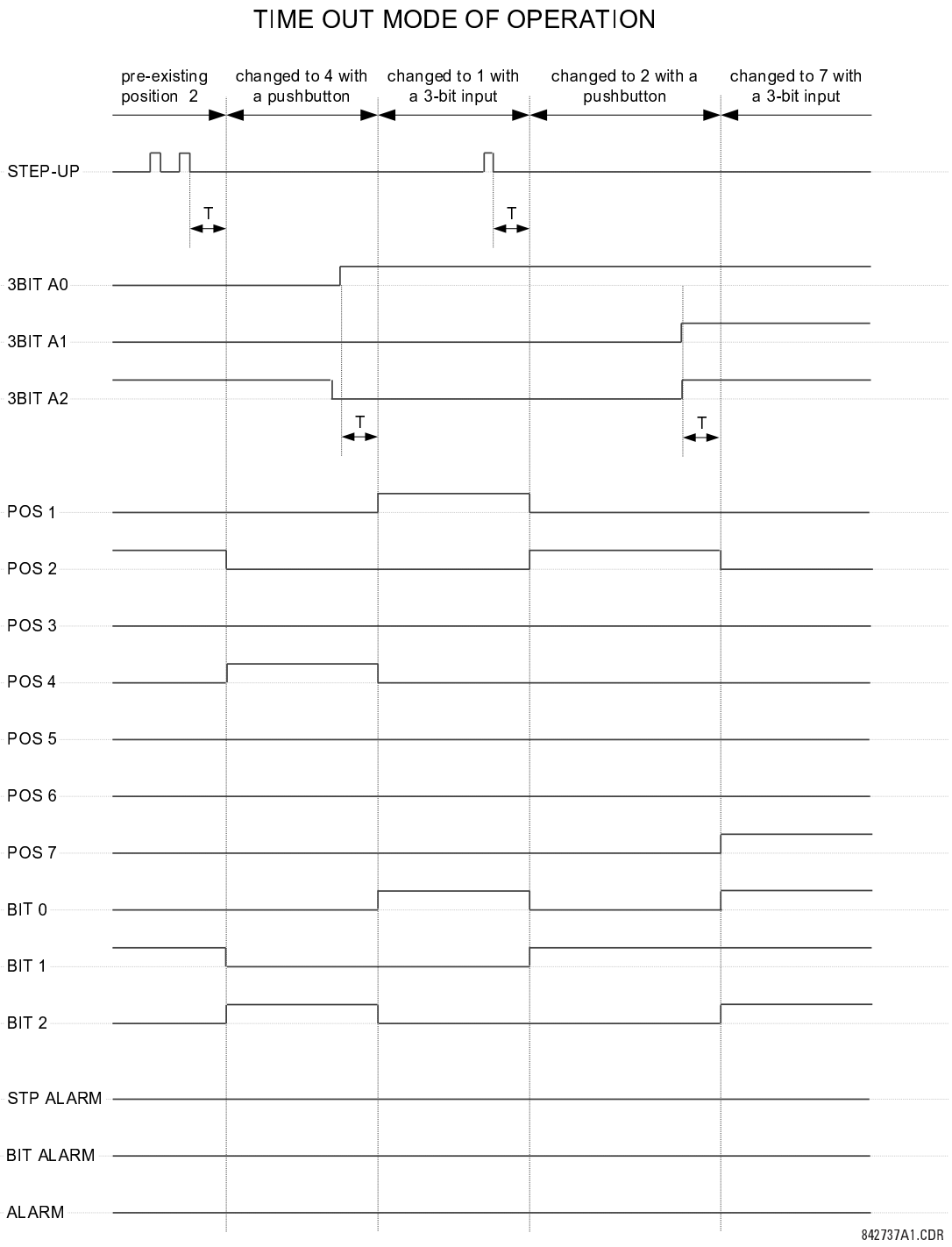

Figure 336: Time-out mode

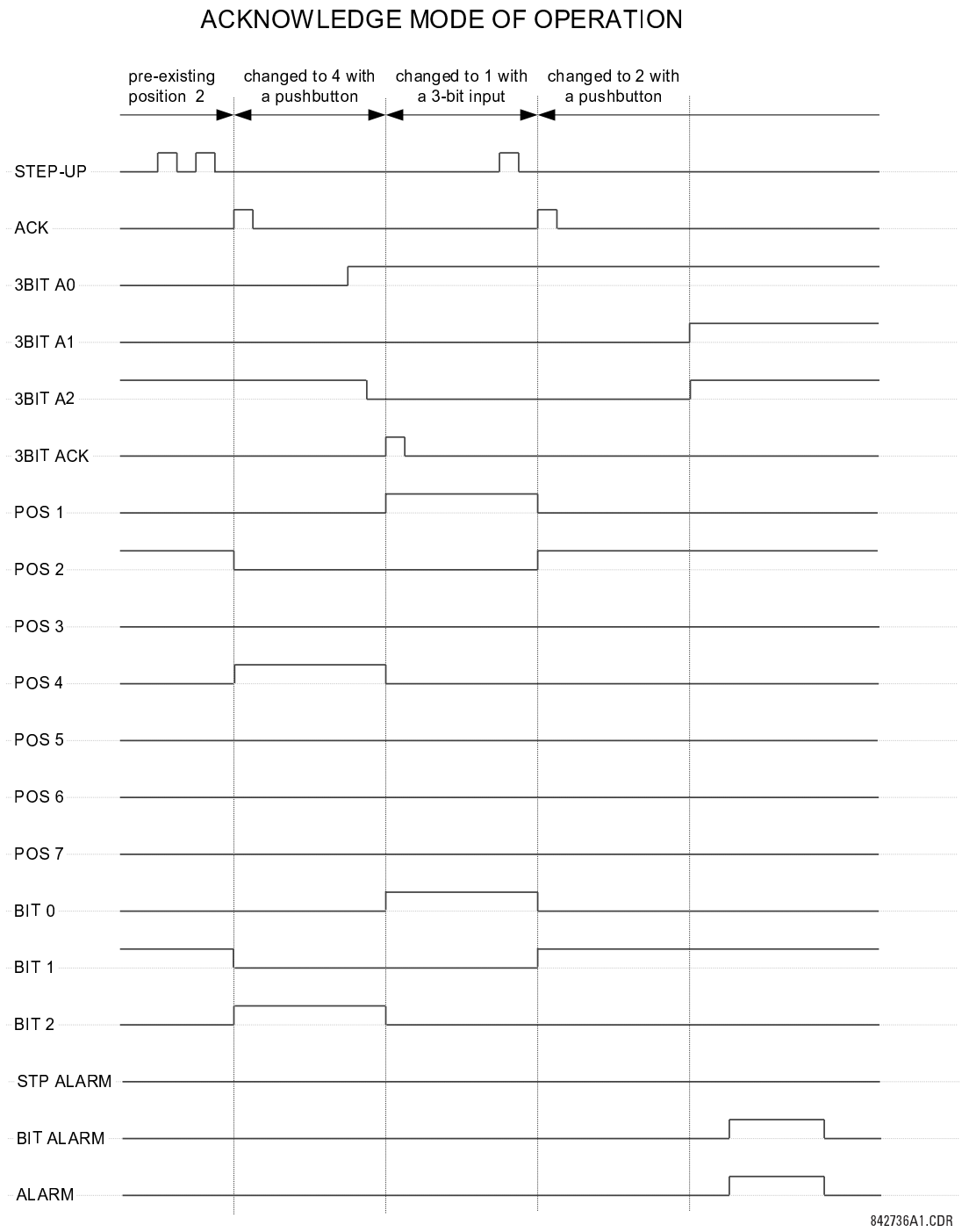

Figure 337: Acknowledge mode

Application example

Consider an application where the selector switch is used to control setting groups 1 through 4 in the relay. The setting groups are to be controlled from both user-programmable pushbutton 1 and from an external device via contact inputs 1 through 3. The active setting group is to be available as an encoded three-bit word to the external device and SCADA via output contacts 1 through 3. The pre-selected setting group is to be applied automatically after five seconds of inactivity of the control inputs. When the relay powers up, it is to synchronize the setting group to the three-bit control input.

Make the following changes to setting group control in the ***SETTINGS > CONTROL ELEMENTS > SETTING GROUPS*** menu:

- ***FUNCTION:*** `Enabled`
- ***Block:*** `Off`
- ***GROUP 2 ACTIVATE ON:*** `SELECTOR 1 POS 2`
- ***GROUP 3 ACTIVATE ON:*** `SELECTOR 1 POS 3`
- ***GROUP 4 ACTIVATE ON:*** `SELECTOR 1 POS 4`
- ***GROUP 5 ACTIVATE ON:*** `Off`
- ***GROUP 6 ACTIVATE ON:*** `Off`

Make the following changes to selector switch element in the ***SETTINGS > CONTROL ELEMENTS > SELECTOR SWITCH > SELECTOR SWITCH 1*** menu to assign control to user programmable pushbutton 1 and contact inputs 1 through 3:

- ***SELECTOR 1 FUNCTION:*** `Enabled`
- ***SELECTOR 1 FULL-RANGE:*** `4`
- ***SELECTOR 1 STEP-UP MODE:*** `Time-out`
- ***SELECTOR 1 TIME-OUT:*** `5.0 s`
- ***SELECTOR 1 STEP-UP:*** `PUSHBUTTON 1 ON`
- ***SELECTOR 1 ACK:*** `Off`
- ***SELECTOR 1 3BIT A0:*** `CONT IP 1 ON`
- ***SELECTOR 1 3BIT A1:*** `CONT IP 2 ON`
- ***SELECTOR 1 3BIT A2:*** `CONT IP 3 ON`
- ***SELECTOR 1 3BIT MODE:*** `Time-out`
- ***SELECTOR 1 3BIT ACK:*** `Off`
- ***SELECTOR 1 POWER-UP MODE:*** `Synchronize`

Now, assign the contact output operation (assume the H6E module) to the selector switch element by making the following changes in the ***SETTINGS > INPUTS/OUTPUTS > CONTACT OUTPUTS*** menu:

- ***OUTPUT H1 OPERATE:*** `SELECTOR 1 BIT 0`
- ***OUTPUT H2 OPERATE:*** `SELECTOR 1 BIT 1`
- ***OUTPUT H3 OPERATE:*** `SELECTOR 1 BIT 2`

Finally, assign configure user-programmable pushbutton 1 by making the following changes in the ***SETTINGS > PRODUCT SETUP > USER-PROGRAMMABLE PUSHBUTTONS > USER PUSHBUTTON 1*** menu:

- ***PUSHBUTTON 1 FUNCTION:*** `Self-reset`
- ***PUSHBUTTON 1 DROP-OUT TIME:*** `0.10 s`

The figure shows the logic for the selector switch.

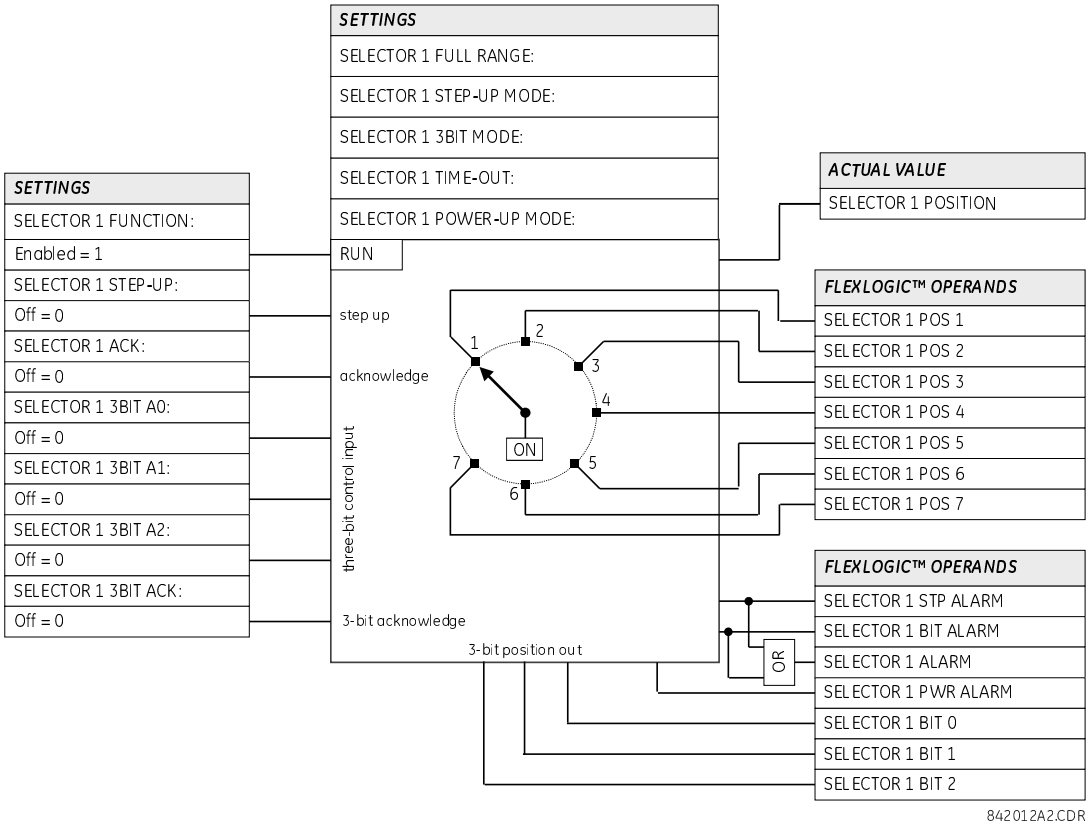

Figure 338: Selector switch logic

9.8.4 TRIP OUTPUT

Setting path: ***SETTINGS > CONTROL ELEMENTS > TRIP OUTPUT***

■ TRIP OUTPUT ■	⇔	TRIP MODE: Disabled	Range: Disabled, 3 Pole Only, 3 Pole & 1 Pole
	⇕	TRIP 3-POLE INPUT<n>: Off	Range: FlexLogic operand n = 1 to 6
	⇕	TRIP 1-POLE INPUT<n>: Off	Range: FlexLogic operand n = 1 to 6
	⇕	TRIP RECLOSE INPUT<n>: Off	Range: FlexLogic operand n = 1 to 6
	⇕	TRIP SEAL-IN DELAY: 0.000 s	Range: 0 to 65.535 s in steps of 0.001
	⇕	TRIP RESET: Pole Curr OR Custom	Range: Pole Curr OR Custom, CBaux OR Custom, Custom
	⇕	START TMR Z2PH Inp1: Off	Range: FlexLogic operand
	⇕	START TMR Z2PH Inp2: Off	Range: FlexLogic operand
	⇕	START TMR Z2GR Inp1: Off	Range: FlexLogic operand
	⇕	START TMR Z2GR Inp2: Off	Range: FlexLogic operand

⇕	PH SELECTOR RESET DELAY: 0.500 s	Range: 0.500 to 3.000 s in steps of 0.001 s
⇕	PH SELECTOR RESET: Off	Range: FlexLogic operand
⇕	TRIP FORCE 3-POLE: Off	Range: FlexLogic operand
⇕	TRIP PILOT PRIORITY: 0.000 s	Range: FlexLogic operand
⇕	EVOLVING FAULT: Off	Range: FlexLogic operand
⇕	TRIP DELAY ON EVOLV FAULTS: 0.000 s	Range: 0 to 65.535 s in steps of 0.001
⇕	BKR ΦA OPEN: Off	Range: FlexLogic operand
⇕	BKR ΦB OPEN: Off	Range: FlexLogic operand
⇕	BKR ΦC OPEN: Off	Range: FlexLogic operand
⇧	TRIP EVENTS: Disabled	Range: Enabled, Disabled

The trip output element is primarily used to collect trip requests from protection elements and other inputs to generate output operands to initiate trip operations. Three pole trips only initiate reclosure if programmed to do so, whereas single pole trips always automatically initiate reclosure. The TRIP 3-POLE and TRIP 1-POLE output operands can also be used as inputs to a FlexLogic OR gate to operate the faceplate Trip indicator LED.

Three-pole operation

In applications where single-pole tripping is not required this element provides a convenient method of collecting inputs to initiate tripping of circuit breakers, the reclose element and breaker failure elements.

Single pole operation

> *Note:*
> *This element must be used in single-pole operation applications.*

This element is used to:

- Determine if a single pole operation is to be performed
- Collect inputs to initiate three pole tripping, the recloser and breaker failure elements
- Collect inputs to initiate single pole tripping, the recloser and breaker failure elements
- Assign a higher priority to pilot aided scheme outputs than to exclusively local inputs

The trip output element works in association with other elements that must be programmed and in-service for successful operation. The necessary elements are: recloser, breaker control, open pole detector, and phase selector. The recloser must also be in the “Reset” state before a single pole trip can be issued. Outputs from this element are also directly connected as initiate signals to the breaker failure elements.

At least one internal protection element or digital input representing detection of a fault must be available as an input to this element. In pilot-aided scheme applications, a timer can be used to delay the output decision until data from a remote terminal is received from communications facilities, to prevent a three pole operation where a single pole operation is permitted.

> *Note:*
> *To ensure correct operation of the single pole tripping feature, any non-distance protection used for single pole tripping (such as high-set overcurrent using the instantaneous or directional overcurrent elements) must be blocked by the OPEN POLE OP ΦA, OPEN POLE OP ΦB, or OPEN POLE OP ΦC operands. For example, instantaneous overcurrent phase A is blocked by OPEN POLE OP ΦA operand. This blocking condition is pre-wired for distance protection.*

Settings

TRIP MODE

This setting is used to select the required mode of operation. If selected to `3 Pole Only`, outputs for all three phases are always set simultaneously. If selected to `3 Pole & 1 Pole` outputs for all three phases are set simultaneously unless the phase selector or a pilot aided scheme determines the fault is single-phase-to-ground. If the fault is identified as being AG, BG, or CG only, the operands for the faulted phase are asserted.

> *Note:*
> *For distance products using Isolated/Compensated configuration, the Trip mode is set to* `3 Pole Only`*.*

TRIP 3-POLE INPUT1 to TRIP 3-POLE INPUT6

These settings are used to select an operand representing a fault condition that is not wanted to initiate a single pole operation (for example, phase undervoltage). Use a FlexLogic OR-gate if more than six inputs are required.

TRIP 1-POLE INPUT1 to TRIP 1-POLE INPUT6

These settings are used to select an operand representing a fault condition that is wanted to initiate a single pole trip-and-reclose if the fault is single phase to ground (for example, distance zone 1). Use a FlexLogic OR-gate if more than six inputs are required. The inputs do not have to be phase-specific as the phase selector determines the fault type.

The AR FORCE 3-P TRIP operand is asserted by the autorecloser 1.5 cycles after single-pole reclosing is initiated. This operand calls for a three-pole trip if any protection element configured under TRIP 1-POLE INPUT remains picked-up. The open pole detector provides blocking inputs to distance elements, and therefore the latter resets immediately after the TRIP 1-POLE operand asserts. For other protection elements used in single-pole tripping, ensure that they reset immediately after tripping, otherwise the fact that they are still picked up is detected as an evolving fault and the relay trips three-poles. For example, if high-set phase instantaneous overcurrent is used, then OPEN POLE OP ΦA is used for blocking phase A of the instantaneous overcurrent element. In this way, after tripping phase A, the phase a instantaneous overcurrent element is forced to reset. Phases B and C are still operational and can detect an evolving fault as soon as 8 ms after tripping phase A. Neutral and negative-sequence instantaneous overcurrent elements are blocked from the OPEN POLE BLK N operand unless the pickup setting is high enough to prevent pickup during single-pole reclosing.

TRIP RECLOSE INPUT1 to TRIP RECLOSE INPUT6

These settings select an operand representing a fault condition that is wanted to initiate three-pole reclosing (for example, phase distance zone 1). Use a FlexLogic OR-gate if more than six inputs are required. These inputs also include the ***TRIP 1-POLE INPUT1*** to ***TRIP 1-POLE INPUT6*** values, which are intended to initiate three-pole reclosing in situations where single-pole tripping commands are changed to three-pole tripping commands. This can happen in cases where the phase selector identifies a multi-phase fault or the ***AR FORCE 3P TRIP*** command is present.

TRIP SEAL-IN DELAY

This setting specifies the minimum time that trip command signals are maintained to provide sufficient time to open the breaker poles. If a value of `0` is specified, then the output signal is reset once the protection elements initiating the trip are reset. If a value other than `0` is specified, then the protection elements must reset and the timer initiated at the first trip command must expire.

TRIP RESET

This setting selects the option to reset the trip latches. If `Pole Curr OR Custom` is chosen, then configure the ***OPEN POLE CURRENT PKP*** setting accordingly. If `CBaux OR Custom` is chosen, then set the breakers appropriately. Both the “Current” and “CBaux” options can be complimented by custom conditions using the ***BKR ΦA OPEN***, ***BKR ΦB OPEN***, and ***BKR ΦC OPEN*** settings indicated below. Alternately, a purely custom condition can be applied to reset trip output latches.

START TMR Z2PH Inp1 and START TMR Z2PH Inp2

These settings select an operand that starts the phase distance zone 2 timer to avoid a trip delay if the fault evolves from one type to another type (for example, from a single-line–to-ground fault to a multi-phase fault) or from one zone of protection to another zone of protection (for example, from zone 3 to zone 2). For instance, the GND DIST Z2 PKP FlexLogic operand or the PH DIST Z3 PKP FlexLogic operand can be assigned to either of these settings. Use a FlexLogic OR-gate if more than two inputs are required. See the phase distance logic diagrams for information.

These settings do not display when using subcycle Distance Adaption. In this case they are available under the ***Common Zone Timer*** menu.

START TMR Z2GR Inp1 and START TMR Z2GR Inp2

These settings select an operand that starts the ground distance zone 2 timer to avoid a trip delay if the fault evolves from one zone of protection to another zone of protection (for example, from zone 3 to zone 2). For instance, the GND DIST Z3 PKP FlexLogic operand can be assigned to these settings. Use a FlexLogic OR-gate if more than two inputs are required. See the ground distance logic diagrams for information.

These settings do not display when using subcycle Distance Adaption. In this case they are available under the ***Common Zone Timer*** menu.

PH SELECTOR RST DELAY

This setting specifies the reset delay of the Phase Selector element outputs after a system disturbance occurs. This delay must be long enough to allow assigned elements to cause single-pole tripping to operate. If, for example, it is intended that distance zone 2 with a time delay of 0.5 seconds causes a single-pole trip, then this setting has to be at least 0.6 seconds.

PH SELECTOR RESET

This setting selects an operand to reset the Phase Selector element. The selected operand is ORed with the OPEN POLE OP operand internally, to reset the phase selector element.

TRIP FORCE 3-POLE

This setting selects an operand that forces an input selected for single pole operation to produce a three-pole operation. The AR DISABLED FlexLogic operand is the recommended value for this setting. Power system configurations or conditions that require such operations can also be considered.

TRIP PILOT PRIORITY

This setting is used to set an interval equal to the inter-relay channel communications time, plus a margin, during which outputs are not asserted. This delay permits fault identification information from a remote terminal to be used instead of local data only.

EVOLVING FAULT

Use this setting to guarantee accuracy of single-pole tripping under evolving external to internal faults. When a close-in external fault occurs, the relay is biased towards very fast operation on a following internal fault. This is primarily due to depressed voltages and elevated currents in response to the first, external fault. The phase selector can exhibit some time lag compared to the main protection elements. This can potentially result in a spurious three-

pole operation on a single-line-to-ground internal fault. Delaying tripping on internal faults that follow detection of reverse faults solves the problem.

As long as the operand indicated under this setting is asserted, the trip action is delayed by the time specified by the ***TRIP DELAY ON EVOLV FAULTS*** setting. With the cross country setting set to solid grounding, this is set to the XC SOLID GND ENABLED operand. Optionally, this can be customized using reverse zone indications (such as zone 4 pickup) with a half-cycle pickup delay, and two-cycle dropout delay. Use this setting only in single-pole tripping applications, when evolving faults are of importance, and slightly delayed operation on evolving faults can be traded for enhanced accuracy of single-pole tripping.

TRIP DELAY ON EVOLV FAULTS

Use this setting in conjunction with the preceding ***EVOLVING FAULT*** setting. Typically this value is set around half a power system cycle. Use it only in single-pole tripping applications, when evolving faults are of importance, and slightly delayed operation on evolving faults can be traded for enhanced accuracy of single-pole tripping.

BKR ΦA OPEN, BKR ΦB OPEN, and BKR ΦC OPEN

These settings are used to select an operand to indicates that phase A, B, or C of the breaker is open, respectively.

Logic diagram

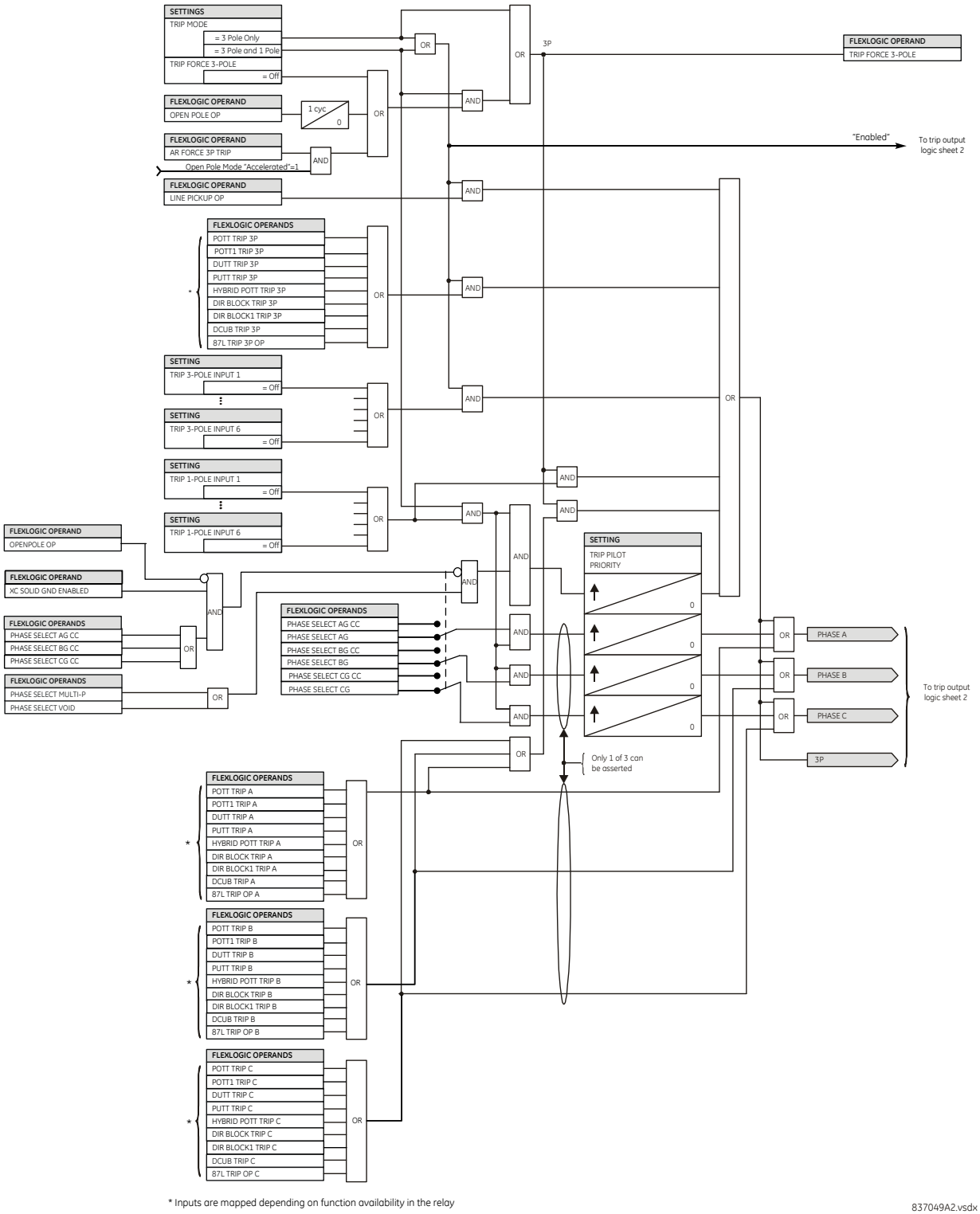

Figure 339: Trip Output logic sheet 1 of 2

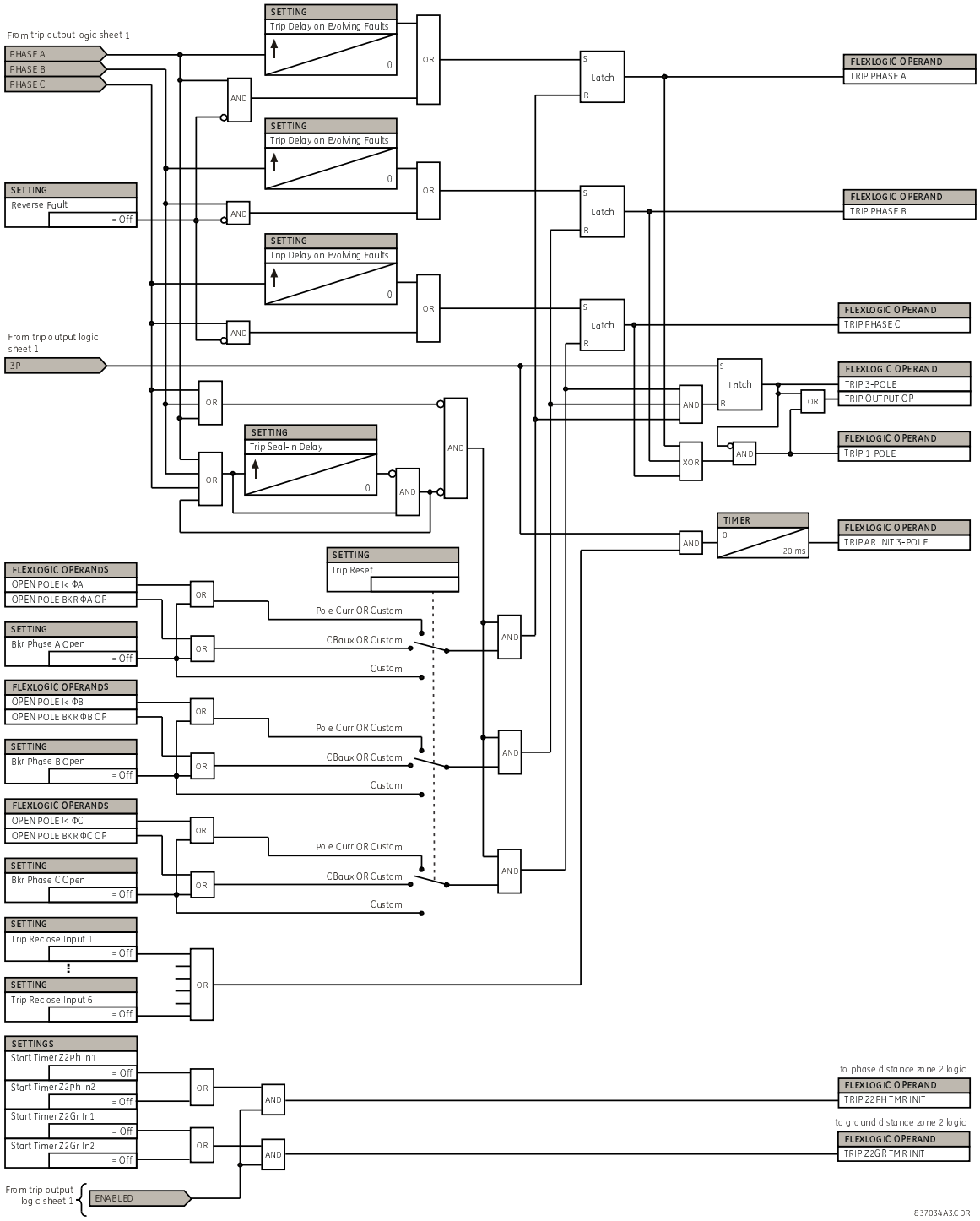

Figure 340: Trip Output logic sheet 2 of 2

9.8.4.1 CROSS COUNTRY

Setting path: ***SETTINGS > CONTROL ELEMENTS > TRIP OUTPUT > CROSS COUNTRY***

■ CROSS COUNTRY ■	⇔	CROSS COUNTRY: Disabled	Range: Disabled, Solid Grounding, Is/Comp Grounding
	⇕	DIST REACH FACTOR: 1.5	Range: 1.0 to 20.0 in steps of 0.1

⇕	IN Current Pickup: 0.050 pu	Range: 0.050 to 30.000 pu in steps of 0.001
⇕	SLOPE: 0.1	Range: 0.0 to 0.3 in steps of 0.1
⇕	VN Voltage Pickup: 0.075 pu	Range: 0.004 to 3.000 pu in steps of 0.001
⇕	1P MODE: IN>	Range: IN>, VN>, IN> AND VN>, IN> OR VN>
⇕	1P TIME DELAY: 0.05 s	Range: 0.00 to 600.00 s in steps of 0.01
⇧	Phase Priority: C(A) ACYCLIC	A(B) ACYCLIC, B(A) ACYCLIC, A(C) ACYCLIC, C(A) ACYCLIC, B(C) ACYCLIC, C(B) ACYCLIC, A(C) CYCLIC, C(A) cyclic, ALL

This feature is specified as a Distance Adaptation Package software option at time of ordering. See the Theory of Operation chapter for explanation and logic diagrams.

CROSS COUNTRY

This setting defines the behavior of the distance protection function according to the type of system grounding:

- Disabled for distance without cross country functionality
- Solid Grounding for distance (both phase and ground enabled) with cross country functionality
- Is/Comp Grounding for distance (both phase and ground enabled) with the following features
- Distance protection is blocked for a single-phase to ground fault
- A ground fault is detected using the neutral current (IN) and/or neutral voltage (VN)
- It has no influence on two-phase or three-phase fault performance
- In the case of cross-country faults, cyclic or acyclic logic is invoked to select a phase preference for the impedance measurement
- The FlexLogic operand Is/Comp Enabled is asserted

DIST REACH FACTOR

This setting allows for scaling the zone 2 distance reach used to

- Achieve phase preference tripping in the case of isolated or Petersen system, or to
- Achieve cross country feature in case of solidly grounded system

For example, if Zone 2 GND Reach = 50 Ohms and if Reach factor is set to 2.0, then the actual reach used for preference tripping is 100 Ohms. This does not scale the actual zone 2 itself.

IN Current Pickup

This setting specifies the pickup level in per-unit values.

SLOPE

This setting specifies the slope for biased neutral current level detector with 10% slope recommended.

VN Voltage Pickup

This setting specifies the pickup level in per-unit values.

1P MODE

In isolated or compensated mode, no trip should occur for a ground fault. Its detection by means of an impedance criteria leads to false information, as voltages around the galvanic network are 0 V for the faulty phase. Instead, a ground fault is detected by comparing IN and/or VN with a settable threshold.

1P TIME DELAY

This setting sets a time delay for a single-phase to ground fault signal (IS/Comp GF).

Phase Priority

There are two types of priority criteria: acyclic and cyclic.

Acyclic criteria are such that one of the phases is always the lowest priority. For example, A(B) Acyclic logic means phase A is higher priority than phase B, phase B is higher priority than phase C, and phase C is the lowest priority and never selected. Acyclic criteria are used most commonly for distribution systems.

Priority

Criterion	Priority	Convergent loops	Selected phase
A(B) acyclic	A before B, B before C	A, B B, C C, A A, B, C	A B A A
B(A) acyclic	B before A, A before C	A, B B, C C, A A, B, C	B B A B
A(C) acyclic	A before C, C before B	A, B B, C C, A A, B, C	A C A A
C(A) acyclic	C before A, A before B	A, B B, C C, A A, B, C	A C C C
B(C) acyclic	B before C, C before A	A, B B, C C, A A, B, C	B B C B
C(B) acyclic	C before B, B before A	A, B B, C C, A A, B, C	B C C C
A(C) cyclic	A before C, C before B, B before A	A, B B, C C, A A, B, C	B C A A
C(A) cyclic	C before A, A before B, B before C	A, B B, C C, A A, B, C	A B C C

9.8.4.2 COMMON ZONE TIMER

Setting path: ***SETTINGS > CONTROL ELEMENTS > TRIP OUTPUT > COMMON ZONE TIMER***

■ COMMON ZONE TIMER ■	⇔	START TMR Z2PH Inp1: Off	Range: FlexLogic operand
	⇕	START TMR Z2PH Inp2: Off	Range: FlexLogic operand
	⇕	START TMR Z2GR Inp1: Off	Range: FlexLogic operand
	⇕	START TMR Z2GR Inp2: Off	Range: FlexLogic operand
	⇕	START TMR Z3PH Inp1: Off	Range: FlexLogic operand
	⇕	START TMR Z3PH Inp2: Off	Range: FlexLogic operand
	⇕	START TMR Z3GR Inp1: Off	Range: FlexLogic operand
	⇕	START TMR Z3GR Inp2: Off	Range: FlexLogic operand
	⇕	START TMR Z4PH Inp1: Off	Range: FlexLogic operand
	⇕	START TMR Z4PH Inp2: Off	Range: FlexLogic operand
	⇕	START TMR Z4GR Inp1: Off	Range: FlexLogic operand
	⇕	START TMR Z4GR Inp2: Off	Range: FlexLogic operand
	⇕	START TMR Z5PH Inp1: Off	Range: FlexLogic operand
	⇕	START TMR Z5PH Inp2: Off	Range: FlexLogic operand
	⇕	START TMR Z5GR Inp1: Off	Range: FlexLogic operand
	⇕	START TMR Z5GR Inp2: Off	Range: FlexLogic operand
	⇕	START TMR Z6PH Inp1: Off	Range: FlexLogic operand
	⇕	START TMR Z6PH Inp2: Off	Range: FlexLogic operand
	⇕	START TMR Z6GR Inp1: Off	Range: FlexLogic operand
	⇧	START TMR Z6GR Inp2: Off	Range: FlexLogic operand

This feature is specified as a Distance Adaptation Package software option at time of ordering. Otherwise the feature is limited to two zones under the Trip Output menu.

START TMR ZXPH Inp1/2 (where X is 2/3/4/5/6)

These settings select an operand that starts Phase Distance zone X timer to avoid a delay in tripping if the fault evolves from one type to another (for example single-line-to-ground to multi-phase fault) or from one zone of protection to another (for example from Z3 to Z2). For instance, the GND DIST Z2 PKP FlexLogic operand or the

PH DIST Z3 PKP FlexLogic operand can be assigned to either of these settings. Use a FlexLogic OR gate if more than two inputs are required. See the Phase Distance logic diagrams for information.

START TMR ZXGR Inp1/2 (where X is 2/3/4/5/6)

Same as above but for Ground Distance zone X.

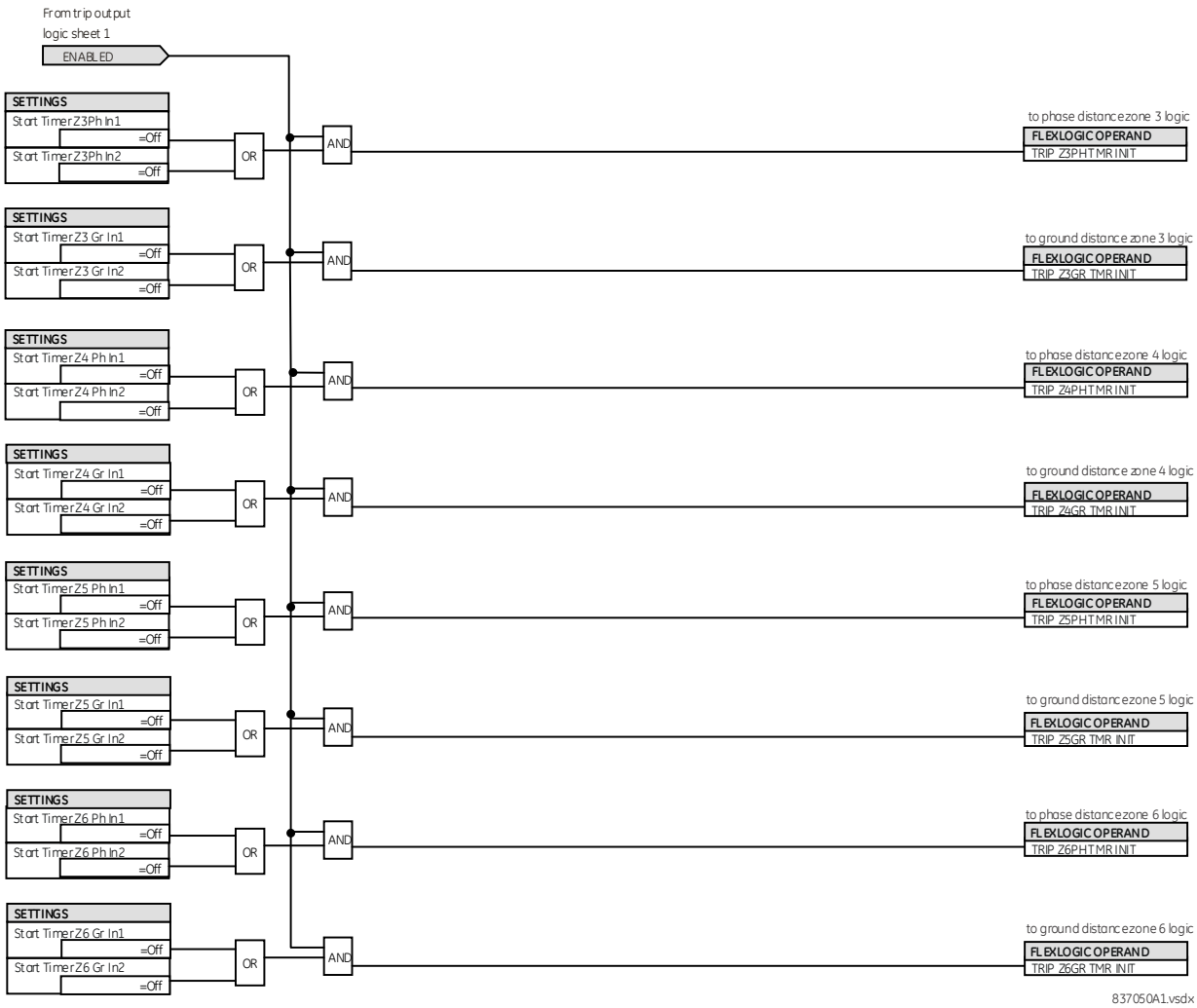

Figure 341: Trip output logic

9.8.5 UNDERFREQUENCY (ANSI 81U)

Setting path: ***SETTINGS > CONTROL ELEMENTS > UNDERFREQUENCY > UNDERFREQUENCY <n>***

> *Note:*
> *Only Underfrequency 1 is shown*

■ UNDERFREQUENCY 1 ■	⇔	UNDFREQ 1 FUNCTION: Disabled	Range: Disabled, Enabled
	⇕	UNDERFREQ 1 BLOCK: Off	Range: FlexLogic operand

⇕	UNDERFREQ 1 SOURCE: SRC 1	Range: SRC <n>
⇕	UNDERFREQ 1 MIN VOLT/AMP: 0.10 pu	Range: 0.10 to 1.25 pu in steps of 0.01
⇕	UNDERFREQ 1 PICKUP: 59.50 Hz	Range: 20.00 to 70.00 Hz in steps of 0.01
⇕	UNDERFREQ 1 PICKUP DELAY: 2.000 s	Range: 0.000 to 65.535 s in steps of 0.001
⇕	UNDERFREQ 1 RESET DELAY: 2.000 s	Range: 0.000 to 65.535 s in steps of 0.001
⇕	UNDERFREQ 1 TARGET: Self-reset	Range: Self-reset, Latched, Disabled
⇧	UNDERFREQ 1 EVENTS: Disabled	Range: Disabled, Enabled

The steady-state frequency of a power system is a certain indicator of the existing balance between the generated power and the load. Whenever this balance is disrupted through the loss of an important generating unit or the isolation of part of the system from the rest of the system, the effect is a reduction in frequency. If the control systems of the system generators do not respond fast enough, the system can collapse. A reliable method to quickly restore the balance between load and generation is to automatically disconnect selected loads, based on the actual system frequency. This technique, called load-shedding, maintains system integrity and minimize widespread outages. After the frequency returns to normal, the load can be restored automatically or manually.

UNDERFREQ 1 SOURCE

This setting is used to select the source for the signal to be measured. The element first checks for a live phase voltage available from the selected source. If voltage is not available, the element attempts to use a phase current. If neither voltage nor current is available, the element does not operate, as it does not measure a parameter below the minimum voltage/current setting.

UNDERFREQ 1 MIN VOLT/AMP

Selects the minimum per unit voltage or current level required to allow the underfrequency element to operate. This threshold is used to prevent an incorrect operation because there is no signal to measure.

UNDERFREQ 1 PICKUP

Selects the level at which the underfrequency element is to pickup. For example, if the system frequency is 60 Hz and the load shedding is required at 59.5 Hz, the setting is 59.50 Hz.

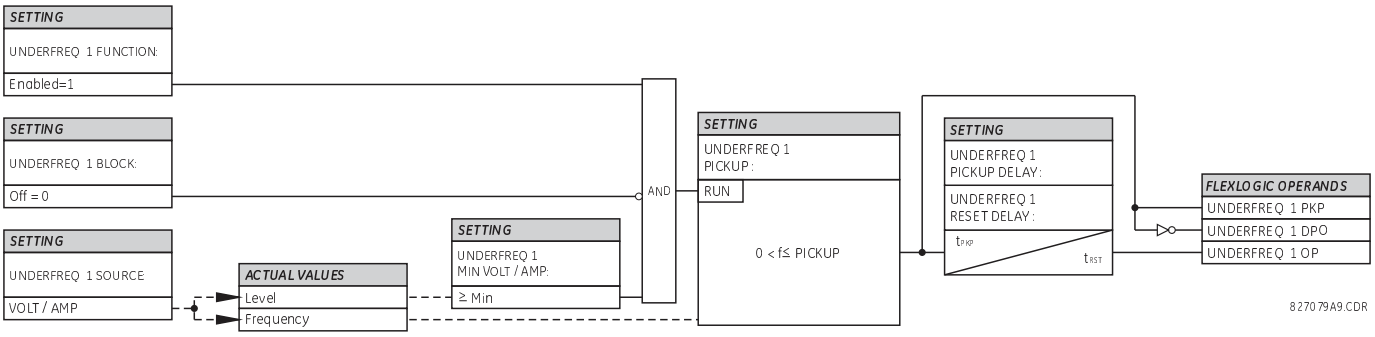

Figure 342: Underfrequency logic

9.8.6 OVERFREQUENCY (ANSI 81O)

Setting path: ***SETTINGS > CONTROL ELEMENTS > OVERFREQUENCY > OVERFREQUENCY 1(4)***

> *Note:*
> *Only Overfrequency 1 is shown*

■ OVERFREQUENCY 1 ■	⇔	OVERFREQ 1 FUNCTION: Disabled	Range: Disabled, Enabled
	⇕	OVERFREQ 1 BLOCK: Off	Range: FlexLogic operand
	⇕	OVERFREQ 1 SOURCE: SRC 1	Range: SRC <n>
	⇕	OVERFREQ 1 PICKUP: 60.50 Hzz	Range: 20.00 to 70.00 Hz in steps of 0.01
	⇕	OVERFREQ 1 PICKUP DELAY: 0.500 s	Range: 0.000 to 65.535 s in steps of 0.001
	⇕	OVERFREQ 1 RESET DELAY : 0.500 s	Range: 0.000 to 65.535 s in steps of 0.001
	⇕	OVERFREQ 1 TARGET: Self-reset	Range: Self-reset, Latched, Disabled
	⇧	OVERFREQ 1 EVENTS: Disabled	Range: Disabled, Enabled

There are four overfrequency elements, numbered 1 through 4.

A frequency calculation for a given source is made on the input of a voltage or current channel, depending on which is available. The channels are searched for the signal input in the following order: voltage channel A, auxiliary voltage channel, current channel A, and ground current channel. The first available signal is used for frequency calculation.

The steady-state frequency of a power system is an indicator of the existing balance between the generated power and the load. Whenever this balance is disrupted through the disconnection of significant load or the isolation of a part of the system that has a surplus of generation, the effect is an increase in frequency. If the control systems of the generators do not respond fast enough, to quickly ramp the turbine speed back to normal, the overspeed can lead to the turbine trip. The overfrequency element can be used to control the turbine frequency ramp down at a generating location. This element can also be used for feeder reclosing as part of the after load shedding restoration.

The ***OVERFREQ 1 SOURCE*** setting selects the source for the signal to be measured.

The ***OVERFREQ 1 PICKUP*** setting selects the level at which the overfrequency element is to pickup.

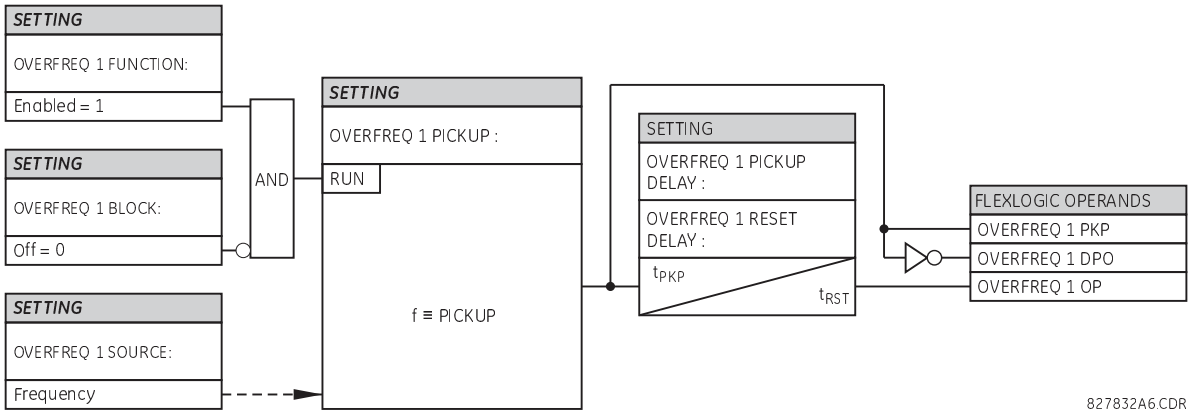

Figure 343: Overfrequency logic

9.8.7 FREQUENCY RATE OF CHANGE (ANSI 81R)

Setting path: ***SETTINGS > CONTROL ELEMENTS > FREQUENCY RATE OF CHANGE > FREQUENCY RATE OF CHANGE <n>***

> *Note:*
> *Only Frequency rate of change 1 is shown*

■ FREQUENCY RATE ■ OF CHANGE 1	⇔	FREQ RATE 1 FUNCTION: Disabled	Range: Disabled, Enabled
	⇕	FREQ RATE 1 SOURCE: SRC 1	Range: SRC <n>
	⇕	FREQ RATE 1 TREND: Increasing	Range: Increasing, Decreasing, Bi-directional
	⇕	FREQ RATE 1 PICKUP: 0.50 Hz/sec	Range: 0.10 to 15.00 Hz/sec in steps of 0.01
	⇕	FREQ RATE 1 OV SUPV PICKUP: 0.700 pu	Range: 0.100 to 3.000 pu in steps of 0.001
	⇕	FREQ RATE 1 OC SUPV PICKUP: 0.200 pu	Range: 0.020 to 30.000 pu in steps of 0.001
	⇕	FREQ RATE 1 MIN FREQUENCY: 45.00 Hz	Range: 20.00 to 80.00 Hz in steps of 0.01
	⇕	FREQ RATE 1 MAX FREQUENCY: 65.00 Hz	Range: 20.00 to 80.00 Hz in steps of 0.01
	⇕	FREQ RATE 1 PICKUP DELAY: 0.000 s	Range: 0 to 65.535 s in steps of 0.001
	⇕	FREQ RATE 1 RESET DELAY: 0.000 s	Range: 0 to 65.535 s in steps of 0.001
	⇕	FREQ RATE 1 BLOCK: Off	Range: FlexLogic operand
	⇕	FREQ RATE 1 TARGET: Self-reset	Range: Self-reset, Latched, Disabled
	⇑	FREQ RATE 1 EVENTS: Disabled	Range: Disabled, Enabled

The element responds to rate of change of frequency with voltage, current and frequency supervision.

FREQ RATE 1 TREND

This setting configures the element to respond to increasing or decreasing frequency, or to frequency change in either direction.

FREQ RATE 1 PICKUP

This setting specifies an intended df/dt pickup threshold. For applications monitoring a decreasing trend, set ***FREQ RATE 1 TREND*** to `Decreasing` and specify the pickup threshold accordingly. The operating condition is -df/dt > Pickup.

For applications monitoring an increasing trend, set ***FREQ RATE 1 TREND*** to `Increasing` and specify the pickup threshold accordingly. The operating condition is: df/dt > Pickup.

For applications monitoring rate of change of frequency in any direction set FREQ RATE 1 TREND to “Bi-Directional” and specify the pickup threshold accordingly. The operating condition is abs (df/dt) > Pickup.

FREQ RATE 1 OV SUPV PICKUP

This setting defines the minimum voltage level required for operation of the element. The supervising function responds to the positive-sequence voltage. Use overvoltage supervision to prevent operation under specific system conditions, such as faults.

FREQ RATE 1 OC SUPV PICKUP

This setting defines minimum current level required for operation of the element. The supervising function responds to the positive-sequence current. Typical application includes load shedding. Set the pickup threshold to 0.020 if no overcurrent supervision is required.

FREQ RATE 1 MIN FREQUENCY

This setting defines the minimum frequency level required for operation of the element. The setting can be used to effectively block the feature based on frequency. For example, if the intent is to monitor an increasing trend but only if the frequency is already above certain level, set this setting to the required frequency level.

FREQ RATE 1 MAX FREQUENCY

This setting defines the maximum frequency level required for operation of the element. The setting can be used to effectively block the feature based on frequency. For example, if the intent is to monitor a decreasing trend but only if the frequency is already below a certain level (such as for load shedding), set this setting to the required frequency level.

Note:
If the signal source assigned to the frequency rate of change element is only set to auxiliary VT, then the minimum voltage supervision is 3 V.

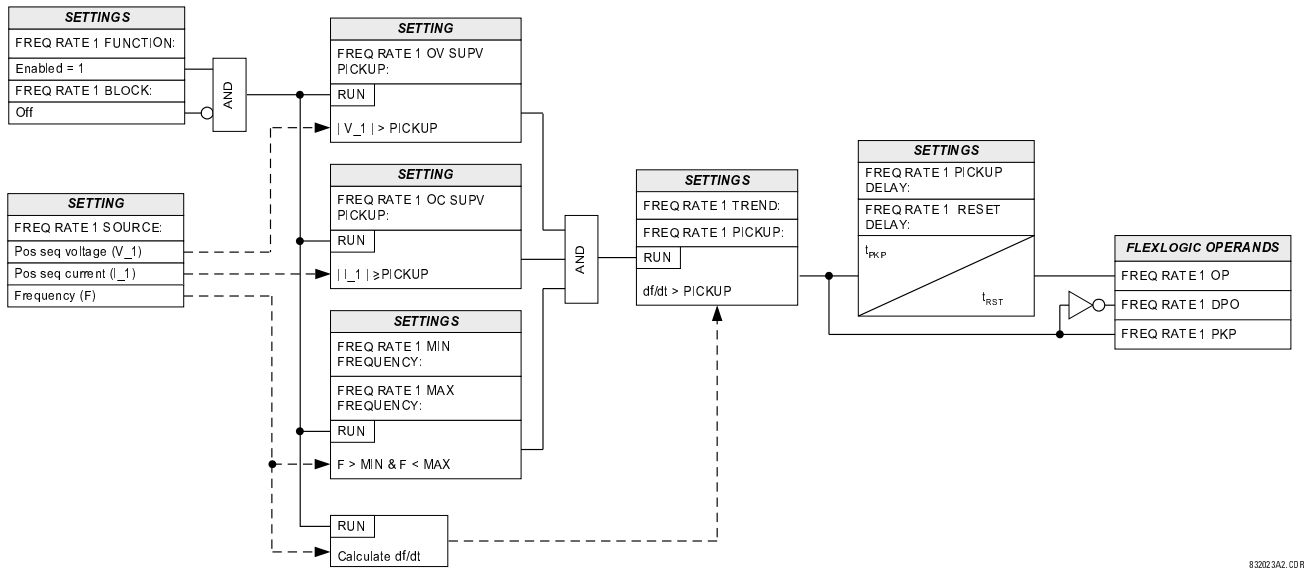

Figure 344: Frequency rate of change logic

9.8.8 SYNCHROCHECK (ANSI 25)

Setting path: ***SETTINGS > CONTROL ELEMENTS > SYNCHROCHECK > SYNCHROCHECK <n>***

> *Note:*
> *Only Synchrocheck 1 is shown*

■ SYNCHROCHECK 1 ■	⇔	SYNCHK1 FUNCTION: Disabled	Range: Disabled, Enabled
	⇕	SYNCHK1 BLOCK: Off	Range: FlexLogic operand
	⇕	SYNCHK1 V1 SOURCE: SRC 1	Range: SRC <n>
	⇕	SYNCHK1 V2 SOURCE: SRC 2	Range: SRC <n>
	⇕	SYNCHK1 PHASE SELECT: Auto	Range: Auto, Vag, Vbg, Vcg, Vab, Vbc, Vca
	⇕	SYNCHK1 MAX VOLT DIFF: 10000 V	Range: 0 to 400000 V in steps of 1
	⇕	SYNCHK1 MAX ANGLE DIFF: 30	Range: 0 to 100° in steps of 1
	⇕	SYNCHK1 MAX FREQ DIFF: 0.100 Hz	Range: 0.005 to 2.000 Hz in steps of 0.001
	⇕	SYNCHK1 MAX FREQ HYSTERESIS: 0.060 Hz	Range: 0.000 to 0.100 Hz in steps of 0.001
	⇕	SYNCHK1 SYNC CLOSE: Off	Range: FlexLogic operand
	⇕	SYNCHK1 S-CLS MAX dF: 0.500 Hz	Range: 0.100 to 10.000 Hz in steps of 0.001
	⇕	SYNCHK1 S-CLS MIN dF: 0.100 Hz	Range: 0.005 to 1.000 Hz in steps of 0.001

⇕	SYNCHK1 S-CLS ANG: 1	Range: 0 to 100° in steps of 1
⇕	SYNCHK1 S-CLS BRK TIME: 0.035 s	Range: 0.010 to 0.500 s in steps of 0.001
⇕	SYNCHK1 V2 MAG CORR FACTOR: 1.00	Range: 0.10 to 10.00 in steps of 0.01
⇕	SYNCHK1 V2 ANGLE SHIFT: 0	Range: -180 to +180 degrees in steps of 1
⇕	SYNCHK1 DEAD SOURCE SELECT: LV1 and DV2	Range: None, LV1 and DV2, DV1 and LV2, DV1 or DV2, DV1 Xor DV2, DV1 and DV2
⇕	SYNCHK1 DEAD V1 MAX VOLT: 0.30 pu	Range: 0.04 to 1.25 pu in steps of 0.01
⇕	SYNCHK1 DEAD V2 MAX VOLT: 0.30 pu	Range: 0.04 to 1.25 pu in steps of 0.01
⇕	SYNCHK1 LIVE V1 MIN VOLT: 0.70 pu	Range: 0.04 to 1.25 pu in steps of 0.01
⇕	SYNCHK1 LIVE V2 MIN VOLT: 0.70 pu	Range: 0.04 to 1.25 pu in steps of 0.01
⇕	SYNCHK1 TARGET: Self-reset	Range: Self-reset, Latched, Disabled
⇧	SYNCHK1 EVENTS: Disabled	Range: Disabled, Enabled

The synchronism check function supervises the paralleling of two parts of a system that are to be joined by the closure of a circuit breaker. The synchrocheck elements are typically used at locations where the two parts of the system are interconnected through at least one other point in the system.

Synchrocheck verifies that the voltages (V1 and V2) on the two sides of the supervised circuit breaker are within set limits of magnitude, angle, and frequency differences. The time that the two voltages remain within the admissible angle difference is determined by the setting of the phase angle difference DF and the frequency difference DF (slip frequency). It can be defined as the time it takes the voltage phasor V1 or V2 to traverse an angle equal to 2 ´ DF at a frequency equal to the frequency difference DF. This time is calculated by:

$$T = (\Delta F \times 360°/2\Delta\Phi)^{-1}$$

where:

- $\Delta\Phi$ = phase angle difference in degrees
- ΔF = frequency difference in Hz

If one or both sources are de-energized, the synchrocheck programming can allow for closing of the circuit breaker using undervoltage control to bypass the synchrocheck measurements (dead source function).

SYNCHK1 V1 SOURCE

This setting selects the source for voltage V1 (see the Notes section that follows).

SYNCHK1 V2 SOURCE

Selects the source for voltage V2. V1 and V2 can have different sources or they can be the same (see the table in the next section).

If V1 and V2 are assigned to SRC 1, for example, then in ***Settings > System Setup > Power System***, the below settings should have the following values:

- ***FREQUENCY AND PHASE REFERENCE***: `SRC 1`
- ***ALTERNATE FREQ AND PHS REFERENCE***: `SRC 1`
- ***SIGNAL TO TRACK***: `Auto` or `3PH_VT`
- ***ALT SIGNAL TO TRACK***: `1PH_VT`

Also, in ***Settings > System Setup > Signal Sources***, both ***PHASE VT*** and ***AUX VT*** should be configured.

If the above settings are not configured as suggested, the following target message will appear: `SYNCHK 1: CHECK SETTINGS`. This message self-resets when the element is either disabled or configured as above.

> *Note:*
> *The same source feature is not supported in the L60*

SYNCHK1 PHASE SELECT

This setting selects the source voltage (see the table in the next section) used by the synchrocheck element and is applicable when

- Both V1 and V2 assigned signal sources differ, and
- Both V1 and V2 assigned signal sources both have three-phase VT banks configured

SYNCHK1 MAX VOLT DIFF

Selects the maximum primary voltage difference in volts between the two sources. A primary voltage magnitude difference between the two input voltages below this value is within the permissible limit for synchronism.

SYNCHK1 MAX ANGLE DIFF

Selects the maximum angular difference in degrees between the two sources. An angular difference between the two input voltage phasors below this value is within the permissible limit for synchronism.

SYNCHK1 MAX FREQ HYSTERESIS

This setting specifies the required hysteresis for frequency difference condition.

SYNCHK1 MAX FREQ DIFF

The condition becomes satisfied when the frequency difference becomes lower than ***SYNCHK1 MAX FREQ DIFF***. Once the condition is satisfied, the frequency difference must increase to more than the sum of ***SYNCHK1 MAX FREQ DIFF*** + ***SYNCHK1 MAX FREQ HYSTERESIS*** to drop out.

SYNCHK1 S-CLS MAX dF

The condition becomes satisfied when the frequency difference becomes lower than ***SYNCHK1 S-CLS MAX dF***. Once the condition is satisfied, the frequency difference must increase to more than the sum of ***SYNCHK1 S-CLS MAX dF*** + ***SYNCHK1 MAX FREQ HYSTERESIS*** to drop out.

SYNCHK1 S-CLS MIN dF

The condition becomes satisfied when the frequency difference becomes higher than ***SYNCHK1 S-CLS MIN dF***. Once the condition is satisfied, the frequency difference must decrease to less than ***SYNCHK1 S-CLS MIN dF*** - ***SYNCHK1 MAX FREQ HYSTERESIS*** to drop out.

SYNCHK1 SYNC CLOSE

Enables the dynamic mode of synchrocheck. When it is enabled, the location of where the present V2 vector will be arriving to synchronize (shown as V2' in the figures here) with breaker close time being taken into account will be

predicted based on the measured slip frequency so that breaker close command can be issued in advance to ensure the synchronism at the time when the breaker is actually closed.

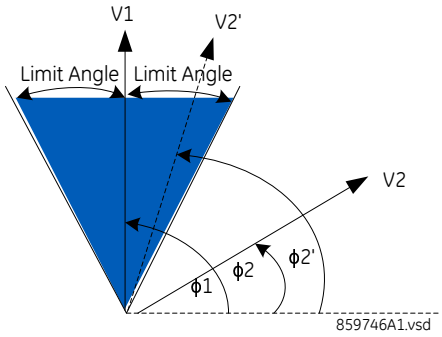

Figure 345: Synchrocheck plot for slip > 0 (slip = F2-F1)

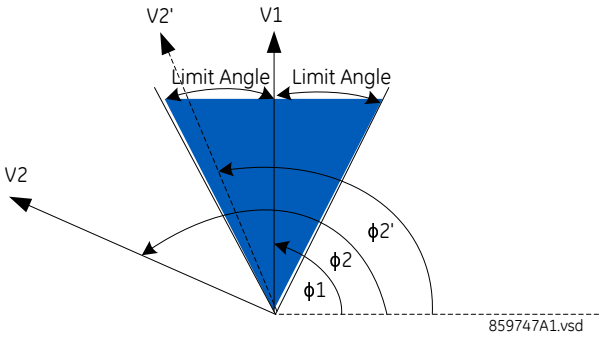

Figure 346: Synchrocheck plot for slip < 0 (slip = F2-F1)

SYNCHK1 S-CLS MAX dF

Specifies the maximum slip frequency allowed in Hz in the dynamic mode. The dynamic mode is disarmed when the slip frequency exceeds this setting. Setting more than 2 Hz is not recommended as it is expected to have significant errors in phasor estimation, so apply them with caution.

SYNCHK1 S-CLS MIN dF

Specifies the minimum slip frequency allowed in Hz in the dynamic mode. The dynamic mode is disarmed when the slip frequency drops below this setting.

SYNCHK1 S-CLS ANG

This setting specifies the maximum angular difference in degrees between the two voltage phasors V1 and projected V2, that is, V2'.

SYNCHK1 S-CLS BRK TIME

Specifies the breaker closing time in seconds.

SYNCHK1 V2 MAG CORR FACTOR

Specifies the magnitude correction factor of source V2. This setting is used for V2 magnitude compensation so that V2 magnitude can be directly compared with V1 magnitude. For example, when V1 and V2 are taken from 2 different windings of the transformer and at different voltage levels, the magnitude compensation must be performed before starting magnitude comparison in synchrocheck element.

SYNCHK1 V2 ANGLE SHIFT

Specifies the angle of source V2 that needs to be shifted so that V2 angle can be directly compared with V1 angle. For example, when V1 and V2 are taken from two different windings of the transformer and with different angle shift due to winding connections, the angle shift compensation must be performed before starting angle comparison in synchrocheck element.

SYNCHK1 DEAD SOURCE SELECT

Selects the combination of dead and live sources that bypass the synchronism check function and permit the breaker to be closed when one or both of the two voltages (V1 or/and V2) are below the maximum voltage threshold. A dead or live source is declared by monitoring the voltage level. Six options are available:

None — Dead Source function is disabled

- LV1 and DV2 — Live V1 and Dead V2
- DV1 and LV2 — Dead V1 and Live V2
- DV1 or DV2 — Dead V1 or Dead V2
- DV1 Xor DV2 — Dead V1 exclusive-or Dead V2 (one source is Dead and the other is Live)
- DV1 and DV2 — Dead V1 and Dead V2

SYNCHK1 DEAD V1 MAX VOLT

Establishes a maximum voltage magnitude for V1 in 1 pu. Below this magnitude, the V1 voltage input used for synchrocheck is considered “Dead” or de-energized.

SYNCHK1 DEAD V2 MAX VOLT

Establishes a maximum voltage magnitude for V2 in pu. Below this magnitude, the V2 voltage input used for synchrocheck is considered “Dead” or de-energized.

SYNCHK1 LIVE V1 MIN VOLT

Establishes a minimum voltage magnitude for V1 in pu. Above this magnitude, the V1 voltage input used for synchrocheck is considered “Live” or energized.

SYNCHK1 LIVE V2 MIN VOLT

This setting establishes a minimum voltage magnitude for V2 in pu. Above this magnitude, the V2 voltage input used for synchrocheck is considered “Live” or energized.

9.8.8.1 NOTES ON THE SYNCHROCHECK FUNCTION

Note the following:

1) The selected sources for synchrocheck inputs V1 and V2 can include both a three-phase and an auxiliary voltage. The relay automatically selects the specific voltages to be used by the synchrocheck element in accordance with the following tables.

V1 and V2 assigned with different signal source

No.	V1 or V2 (source Y)	V1 or V2 (source Z)	Auto-selected combination		SYNCHK PHASE SELECT	Selected Voltage for comparison
			Source Y	Source Z		
1	3 Phase VT bank with or without Auxiliary VT	3 Phase VT bank with or without Auxiliary VT	3 Phase VT bank	3 Phase VT bank	Auto	Vab
2	3 Phase VT bank with or without Auxiliary VT	3 Phase VT bank with or without Auxiliary VT	3 Phase VT bank	3 Phase VT bank	Vag or Vbg or Vcg or Vab or Vbc or Vca	As set for SYNCHK PHASE SELECT
3	3 Phase VT bank with or without Auxiliary VT	Auxiliary VT	3 Phase VT bank	Auxiliary VT	Not applicable	V auxiliary (as set for Source Z)

No.	V1 or V2 (source Y)	V1 or V2 (source Z)	Auto-selected combination		SYNCHK PHASE SELECT	Selected Voltage for comparison
			Source Y	Source Z		
4	Auxiliary VT	Auxiliary VT	Auxiliary VT	Auxiliary VT	Not applicable	V auxiliary (as set for selected sources)

The voltages V1 and V2 are matched automatically so that the corresponding voltages from the two sources are used to measure conditions. A phase to phase voltage is used if available in both sources; if one or both of the Sources have only an auxiliary voltage, this voltage is used. For example, if an auxiliary voltage is programmed to VAG, the synchrocheck element automatically selects VAG from the other source. If the comparison is required on a specific voltage, the user has the following two options:

Select the preferred phase to ground or phase to phase voltage using the ***SYNCHK PHASE SELECT*** setting when both Source 1 and Source 2 have phase VTs

Externally connect that specific voltage to auxiliary voltage terminals and then use this “Auxiliary Voltage” to check the synchronism conditions. If using a single CT/VT module with both phase voltages and an auxiliary voltage, ensure that only the auxiliary voltage is programmed in one of the sources to be used for synchrocheck. An exception is that synchronism cannot be checked between Delta connected phase VTs and a Wye connected auxiliary voltage.

V1 and V2 assigned with same signal source

No.	V1 or V2 (source Y)	Required combination		Selected Voltage for comparison
		V1	V2	
1	3 Phase VT bank with Auxiliary VT	3 Phase VT bank	Auxiliary VT	V auxiliary (as set for Source Y)

When both V1 and V2 are assigned with the same source, the relay assigns the three Phase VT bank to V1 and Auxiliary VT to V2 and as programmed per setting “Auxiliary VT connection” used for Synchrocheck. For example, if “Auxiliary VT connection” is programmed to VAG, the synchrocheck element automatically selects VAG from the 3 Phase VT bank of the same source.

Note:
Refer to the SYNCHK1 V2 SOURCE setting description for further information.

Exception: Synchronism cannot be checked between Delta-connected phase VTs and a Wye-connected auxiliary voltage.

2) The relay measures frequency and Volts/Hz from an input on a given source with priorities as established by the configuration of input channels to the source. The relay uses the phase channel of a three-phase set of voltages if programmed as part of that source. The relay uses the auxiliary voltage channel only if that channel is programmed as part of the Source and a three-phase set is not.

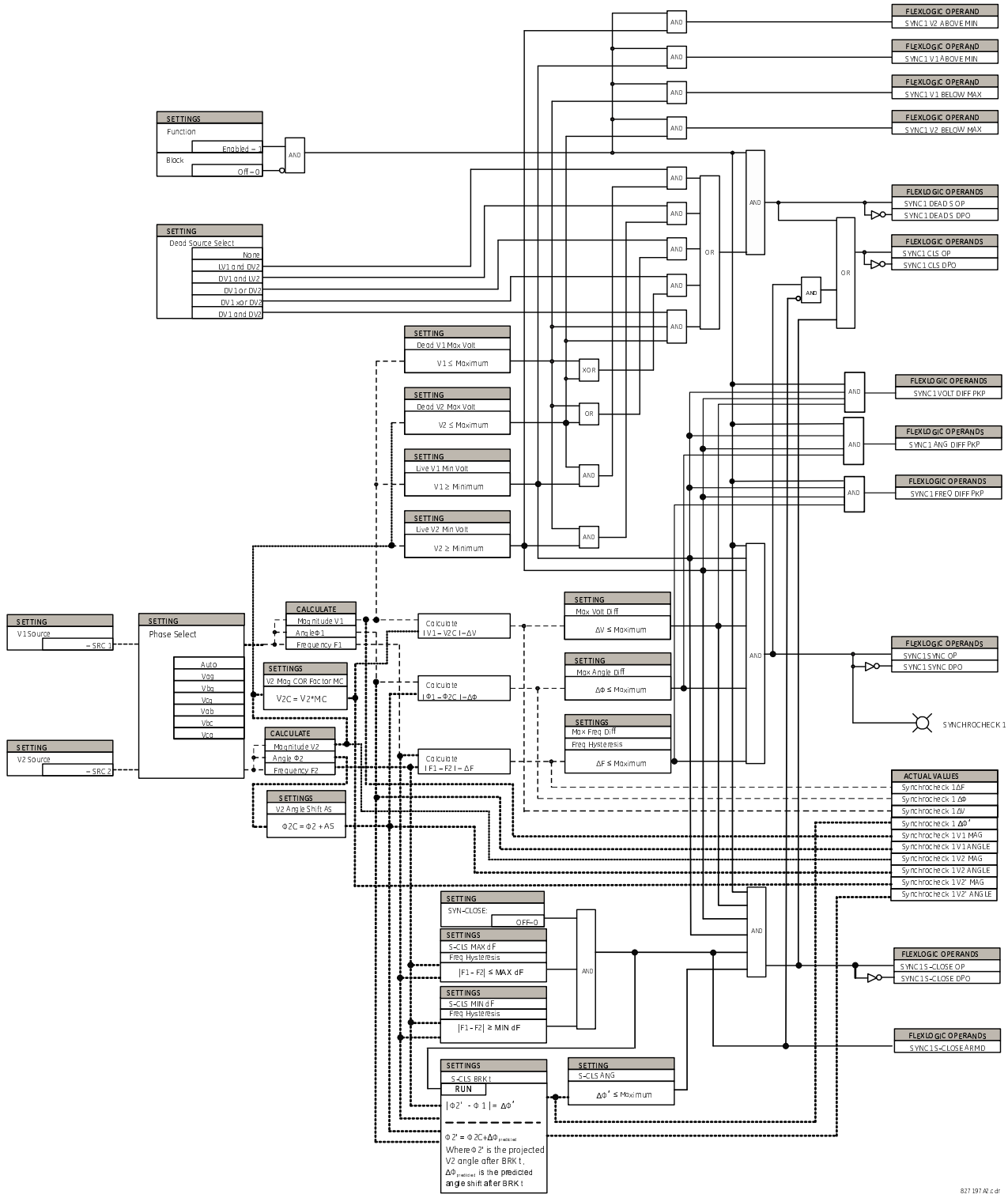

Figure 347: Synchrocheck logic

9.8.9 AUTORECLOSE (ANSI 79)

Setting path: ***SETTINGS > CONTROL ELEMENTS > AUTORECLOSE>***

■ AUTORECLOSE ■	⇔	AR FUNCTION: Disabled	Range: Disabled, Enabled

⇕	AR MODE: Mode 1 (1 & 3 Pole)	Range: Mode 1 (1 & 3 Pole), Mode 2 (1 Pole), Mode 3 (3 Pole-A), Mode 4 (3 Pole-B)
⇕	Mode 1 Activation: Off	Range: FlexLogic operand
⇕	Mode 2 Activation: Off	Range: FlexLogic operand
⇕	Mode 3 Activation: Off	Range: FlexLogic operand
⇕	Mode 4 Activation: Off	Range: FlexLogic operand
⇕	AR MAX NUMBER OF SHOTS: 2	Range: 1, 2, 3, 4
⇕	AR INITIATE MODE: Protection AND CB	Range: Protection AND CB, Protection Only
⇕	AR BLOCK BKR1: Off	Range: FlexLogic operand
⇕	AR CLOSE TIME BKR 1: 0.10 s	Range: 0.1 to 655.35 s in steps of 0.01
⇕	AR BKR MAN CLOSE: Off	Range: FlexLogic operand
⇕	AR BLK TIME UPON MAN CLS: 10.00 s	Range: 0.00 to 655.35 s in steps of 0.01
⇕	AR 1P INIT: Off	Range: FlexLogic operand
⇕	AR 3P INIT: Off	Range: FlexLogic operand
⇕	AR 3P TD INIT: Off	Range: FlexLogic operand
⇕	AR MULTI-P FAULT: Off	Range: FlexLogic operand
⇕	BKR ONE POLE OPEN: Off	Range: FlexLogic operand
⇕	BKR 3 POLE OPEN: Off	Range: FlexLogic operand
⇕	AR 3-P DEAD TIME 1: 0.50 s	Range: 0.00 to 655.35 s in steps of 0.01
⇕	AR 3-P DEAD TIME 2: 1.20 s	Range: 0.00 to 655.35 s in steps of 0.01
⇕	AR 3-P DEAD TIME 3: 2.00 s	Range: 0.00 to 655.35 s in steps of 0.01
⇕	AR 3-P DEAD TIME 4: 4.00 s	Range: 0.00 to 655.35 s in steps of 0.01
⇕	AR EXTEND DEAD T 1: Off	Range: FlexLogic operand
⇕	AR DEAD TIME 1 EXTENSION: 0.50 s	Range: 0.00 to 655.35 s in steps of 0.01
⇕	AR RESET: Off	Range: FlexLogic operand

⇕	AR RESET TIME: 60.00 s	Range: 0 to 655.35 s in steps of 0.01
⇕	AR BKR CLOSED: Off	Range: FlexLogic operand
⇕	AR BLOCK: Off	Range: FlexLogic operand
⇕	AR PAUSE: Off	Range: FlexLogic operand
⇕	AR INCOMPLETE SEQ TIME: 5.00 s	Range: 0 to 655.35 s in steps of 0.01
⇕	AR BLOCK BKR2: Off	Range: FlexLogic operand
⇕	AR CLOSE TIME BKR2: 0.10 s	Range: 0.10 to 655.35 s in steps of 0.01
⇕	AR TRANSFER 1 TO 2: No	Range: Yes, No
⇕	AR TRANSFER 2 TO 1: No	Range: Yes, No
⇕	AR BKR1 FAIL OPTION: Continue	Range: Continue, Lockout
⇕	AR BKR2 FAIL OPTION: Continue	Range: Continue, Lockout
⇕	AR 1-P DEAD TIME: 1.00 s	Range: 0 to 655.35 s in steps of 0.01
⇕	AR BKR SEQUENCE: 1-2	Range: 1, 2, 1&2, 1–2, 2–1, 1-2/2-1
⇕	AR CHNG BKR SEQNCE: Off	Range: FlexLogic operand
⇕	AR TRANSFER TIME: 4.00 s	Range: 0 to 655.35 s in steps of 0.01
⇕	AR BUS FLT INIT: Off	Range: FlexLogic operand
⇧	AR EVENT: Disabled	Range: Enabled, Disabled

The autoreclose scheme is intended for use on transmission lines with circuit breakers operated in both the single pole and three pole modes, in one or two breaker arrangements. The autoreclose scheme provides four programs with different operating cycles, depending on the fault type. Each of the four programs can be set to trigger up to four reclosing attempts. The second, third, and fourth attempts always perform three-pole reclosing and have independent dead time delays.

When used in two breaker applications, the reclosing sequence is selectable. The reclose signal can be sent to one selected breaker only, to both breakers simultaneously or to both breakers in sequence (one breaker first and then, after a delay to check that the reclose was successful, to the second breaker). When reclosing in sequence, the first breaker should reclose with either the single-pole or three-pole dead time according to the fault type and reclose mode; the second breaker should follow the successful reclosure of the first breaker. When reclosing simultaneously, for the first shot both breakers should reclose with either the single-pole or three-pole dead time, according to the fault type and the reclose mode.

The signal used to initiate the autoreclose scheme is the trip output from protection. This signal can be single pole tripping for single phase faults and three phase tripping for multi-phase faults. The autoreclose scheme has five operating states.

- Enabled: Scheme is permitted to operate
- Disabled: Scheme is not permitted to operate
- Reset: Scheme is permitted to operate and shot count is reset to 0
- Reclose in progress: Scheme has been initiated but the reclose cycle is not finished (successful or not)
- Lockout: Scheme is not permitted to operate until reset received

Autoreclose programs

The autorecloser provides four programs that can cause from one to four reclose attempts (shots). After the first shot, all subsequent recloses are always three-pole. If the maximum number of shots selected is *1* (only one reclose attempt) and the fault is persistent, after the first reclose the scheme goes to lockout upon another Initiate signal.

For the three-pole reclose programs (modes 3 and 4), an AR FORCE 3-P FlexLogic operand is set. This operand can be used in connection with the tripping logic to cause a three-pole trip for single-phase faults.

Mode	Autoreclose mode	First shot		Second shot		Third shot		Fourth shot	
		Single-phase fault	Multi-phase fault	Single-phase fault	Multi-phase fault	Single-phase fault	Multi-phase fault	Single-phase fault	Multi-phase fault
1	1 & 3 Pole	1 Pole	3 Pole	3 Pole or Lockout	3 Pole or Lockout	3 Pole or Lockout	3 Pole or Lockout	3 Pole or Lockout	3 Pole or Lockout
2	1 Pole	1 Pole	Lockout	3 Pole or Lockout	3 Pole or Lockout	3 Pole or Lockout	3 Pole or Lockout	3 Pole or Lockout	3 Pole or Lockout
3	3 Pole-A	3 Pole	Lockout	3 Pole or Lockout	Lockout	3 Pole or Lockout	Lockout	3 Pole or Lockout	Lockout
4	3 Pole-B	3 Pole	3 Pole	3 Pole or Lockout	3 Pole or Lockout	3 Pole or Lockout	3 Pole or Lockout	3 Pole or Lockout	3 Pole or Lockout

The four autoreclose modes are described as follows:

- 1 & 3 Pole — In this mode, the autorecloser starts the ***AR 1-P DEAD TIME*** timer for the first shot if the autoreclose is single-phase initiated, the ***AR 3-P DEAD TIME 1*** timer if the autoreclose is three-pole initiated, and the ***AR 3-P DEAD TIME 2*** timer if the autoreclose is three-phase time delay initiated. If two or more shots are enabled, the second, third, and fourth shots are always three-pole and start the ***AR 3-P DEAD TIME 2(4)*** timers.
- 1 Pole — In this mode, the autorecloser starts the ***AR 1-P DEAD TIME*** for the first shot if the fault is single phase. If the fault is three-phase or a three-pole trip on the breaker occurred during the single-pole initiation, the scheme goes to lockout without reclosing. If two or more shots are enabled, the second, third, and fourth shots are always three-pole and start the ***AR 3-P DEAD TIME 2(4)*** timers.
- 3 Pole-A — In this mode, the autorecloser is initiated only for single phase faults, although the trip is three pole. The autorecloser uses the ***AR 3-P DEAD TIME 1*** for the first shot if the fault is single phase. If the fault is multi phase the scheme goes to Lockout without reclosing. If two or more shots are enabled, the second, third, and fourth shots are always three-phase and start the ***AR 3-P DEAD TIME 2(4)*** timers.
- 3 Pole-B — In this mode, the autorecloser is initiated for any type of fault and starts the ***AR 3-P DEAD TIME 1*** for the first shot. If the initiating signal is ***AR 3P TD INIT*** the scheme starts ***AR 3-P DEAD TIME 2*** for the first shot. If two or more shots are enabled, the second, third, and fourth shots are always three-phase and start the ***AR 3-P DEAD TIME 2(4)*** timers.

Basic reclosing operation

Reclosing operation is determined primarily by the ***AR MODE*** and ***AR BKR SEQUENCE*** settings. The reclosing sequences are started by the initiate inputs. A reclose initiate signal sends the scheme into the reclose-in-progress

(RIP) state, asserting the AR RIP FlexLogic operand. The scheme is latched into the RIP state and resets only when an AR CLS BKR 1 (autoreclose breaker 1) or AR CLS BKR 2 (autoreclose breaker 2) operand is generated or the scheme goes to the Lockout state.

The dead time for the initial reclose operation is determined by the ***AR 1-P DEAD TIME***, ***AR 3-P DEAD TIME 1***, or ***AR 3-P DEAD TIME 2*** setting, depending on the fault type and the mode selected. After the dead time interval the scheme asserts the AR CLOSE BKR 1 or AR CLOSE BKR 2 operands, as determined by the sequence selected. These operands are latched until the breaker closes or the scheme goes to Reset or Lockout.

There are three initiate programs: single pole initiate, three pole initiate, and three pole time delay initiate. Any of these reclose initiate signals start the reclose cycle and set the reclose-in-progress (AR RIP) operand. The reclose-in-progress operand is sealed-in until the Lockout or Reset signal appears.

The three-pole initiate and three-pole time delay initiate signals are latched until the AR CLOSE BKR1, AR CLOSE BKR2, Lockout, or Reset signal appears.

Autoreclose pause

he pause input offers the possibility of freezing the autoreclose cycle until the pause signal disappears. This can be done when a trip occurs and simultaneously or previously, some conditions are detected such as out-of step or loss of guard frequency, or a remote transfer trip signal is received. The pause signal freezes all four dead timers. When the ‘pause’ signal disappears the autoreclose cycle is resumed by continuing the shot timer it was left at when paused.

This feature can be also used when a transformer is tapped from the protected line and a reclose is not wanted until the transformer is removed from the line. In this case, the reclose scheme is paused until the transformer is disconnected. The ***AR PAUSE*** input forces a three-pole trip through the ***3-P DEADTIME 2*** path.

Evolving faults

1.25 cycles after the single pole dead time has been initiated, the AR FORCE 3P TRIP operand is set and later resets only when the scheme is reset or goes to Lockout. This approach ensures that when a fault on one phase evolves to include another phase during the single pole dead time of the auto-recloser the scheme forces a three-pole trip and reclose.

Reclosing scheme operation for two breakers

- Permanent Fault — The general method of operation is the same as that outlined for the one breaker applications except for the following description, which assumes ***AR BKR SEQUENCE*** is `1-2` (reclose Breaker 1 before Breaker 2). The signal output from the dead time timers passes through the breaker selection logic to initiate reclosing of Breaker 1. The Close Breaker 1 signal initiates the Transfer Timer. After the reclose of the first breaker, the fault is again detected by the protection, the breaker is tripped three pole and the autoreclose scheme is initiated. The Initiate signal then stops the transfer timer. After the 3-P dead time times out, the Close Breaker 1 signal closes the first breaker again and starts the transfer timer. Since the fault is permanent, the protection trips again initiating the autoreclose scheme that is sent to Lockout by the SHOT COUNT = MAX signal.
- Transient Fault — When the first reclose output signal is sent to close Breaker 1, the reset timer starts. The close Breaker 1 signal initiates the transfer timer that times out and sends the close signal to the second breaker. If the reclosure sequence is successful (both breakers closed and there is no initiating signal), the reset timer times out, returning the scheme to the reset state with the shot counter set to `0`. The scheme is ready for a new reclose cycle.

AR BKR1(2) reclose fail

If the selected sequence is `1-2` or `2-1` and after the first or second reclose attempt the breaker fails to close, there are two options. If the ***AR BKR 1(2) FAIL OPTION*** is set to `Lockout`, the scheme goes to lockout state. When it is set to `Continue`, the reclose process continues with Breaker 2. At the same time the shot counter is decreased (since the closing process was not completed).

Scheme reset after reclosure

When a reclose output signal is sent to close either breaker 1 or 2, the reset timer is started. If the reclosure sequence is successful (there is no initiating signal and the breakers are closed), the reset timer times out, returning the scheme to the reset state, with the shot counter set to 0, making it ready for a new reclose cycle.

In two breaker schemes, if one breaker is in the out-of-service state and the other is closed at the end of the reset time, the scheme also resets. If at the end of the reset time at least one breaker, which is not in the out-of-service state, is open the scheme is sent to Lockout.

The reset timer is stopped if the reclosure sequence is not successful: an initiating signal present or the scheme is in Lockout state. The reset timer is also stopped if the breaker is manually closed or the scheme is otherwise reset from lockout.

Lockout

When a reclose sequence starts by an initiate signal, the scheme moves into the reclose-in-progress state and starts the incomplete sequence timer. The setting of this timer determines the maximum time interval allowed for a single reclose shot. If a close breaker 1 or 2 signal is not present before this time expires, the scheme goes to Lockout.

There are four other conditions that can take the scheme to the Lockout state, as follows:

- Receipt of a `Block` input while in the reclose-in-progress state
- The reclosing program logic — When a 3P Initiate is present and the autoreclose mode is either 1 Pole or 3Pole-A (3 pole autoreclose for single pole faults only)
- Initiation of the scheme when the count is at the maximum allowed
- If at the end of the reset time at least one breaker, which is not in the out-of-service state, is open the scheme is sent to Lockout. The scheme is also sent to Lockout if one breaker fails to reclose and the setting ***AR BKR FAIL OPTION*** is set to `Lockout`.

Once the Lockout state is set, it is latched until one or more of the following occurs:

- The scheme is intentionally reset from Lockout, employing the Reset setting of the Autorecloser
- The Breaker(s) is/are manually closed from panel switch, SCADA, or other remote control through the ***AR BRK MAN CLOSE*** setting;
- 10 seconds after breaker control detects that breaker(s) were closed

Breaker open before fault

A logic circuit is provided that inhibits the close breaker 1 and close breaker 2 outputs if a reclose initiate (RIP) indicator is not present within 30 ms of the Breaker Any Phase Open input. This feature is intended to prevent reclosing if one of the breakers was open in advance of a reclose initiate input to the recloser. This logic circuit resets when the breaker is closed.

Transfer reclose when breaker is blocked

When the reclosing sequence `1-2` is selected and Breaker 1 is blocked (AR BKR1 BLK operand is set) the reclose signal can be transferred direct to the Breaker 2 if ***AR TRANSFER 1 TO 2*** is set to `Yes`. If set to `No`, the scheme is sent to Lockout by the incomplete sequence timer.

When the reclosing sequence `2-1` is selected and Breaker 2 is blocked (AR BKR2 BLK operand is set) the reclose signal can be transferred direct to the Breaker 1 if ***AR TRANSFER 2 TO 1*** is set to `Yes`. If set to `No` the scheme is sent to Lockout by the incomplete sequence timer.

Force three-pole tripping

The reclosing scheme contains logic that is used to signal trip logic that three-pole tripping is required for certain conditions. This signal is activated by any of the following:

- Autoreclose scheme is paused after it was initiated
- Autoreclose scheme is in the lockout state
- Autoreclose mode is programmed for three-pole operation
- The shot counter is not at 0; that is, the scheme is not in the reset state. This ensures a second trip is three-pole when reclosing onto a permanent single phase fault.
- 1.25 cycles after the single-pole reclose is initiated by the operand assigned to the ***AR 1P INIT*** setting

Zone 1 extent

The zone 1 extension philosophy here is to apply an overreaching zone permanently as long as the relay is ready to reclose, and reduce the reach when reclosing. Another zone 1 extension approach is to operate normally from an underreaching zone, and use an overreaching distance zone when reclosing the line with the other line end open. This philosophy can be programmed via the line pickup scheme.

The Extended Zone 1 is 0 when autoreclose is in lockout or disabled and 1 when autoreclose is in reset.

- When Extended Zone 1 is 0, the distance functions are set to normal underreach Zone 1 setting
- When Extended Zone 1 is 1, the distance functions can be set to Extended Zone 1 Reach, which is an overreaching setting
- During a reclose cycle, Extended Zone 1 goes to 0 as soon as the first CLOSE BREAKER signal is issued (AR SHOT COUNT > 0) and remains 0 until the recloser goes back to reset

Settings

The single-phase autoreclose settings are as follows.

AR MODE

This setting selects the Autoreclose operating mode from the four available reclose modes (Mode 1: 1 & 3 Pole, Mode 2: 1 Pole, Mode 3: 3 Pole-A and Mode 4: 3 Pole-B), which functions in conjunction with signals received at the initiation inputs as described. The autorecloser runs in this mode until a different mode is activated through the AR Mode Activation inputs explained as follows.

Mode <n> Activation

This setting selects an operand for activating the corresponding AR mode in runtime. Mode change via activation input takes place when only one of the four activation inputs is high and the AR RIP operand is low (that is, reclose is not in progress) and also the mode to be activated is different from the existing mode, otherwise the activation input is ignored and the existing mode continues to be used. See details in the Mode Control Logic diagram.

AR MAX NUMBER OF SHOTS

This setting specifies the number of reclosures that can be attempted before reclosure goes to lockout when the fault is permanent.

AR INITIATE MODE

This setting selects the autoreclose initiation mode. When selected as `Protection AND CB`, the autoreclose element is initiated by protection operation and begins incrementing the autoreclose dead time timer when a circuit breaker is open. Breaker status is determined from breaker auxiliary contacts which need to be correctly configured in breaker settings. In `Protection only` initiation mode, the autoreclose element is initiated by protection operation and begins incrementing the dead time when protection resets, without the need of breaker auxiliary contacts.

AR BLOCK BKR1

This input selects an operand that blocks the reclose command for breaker 1. This condition can be for example: breaker low air pressure, reclose in progress on another line (for the central breaker in a breaker and a half arrangement), or a sum of conditions combined in FlexLogic.

AR CLOSE TIME BKR1

This setting represents the closing time for the breaker 1 from the moment the *Close* command is sent to the moment the breaker contacts are closed in the `Protection AND CB` mode or when Open Pole is reset in the `Protection only` mode. In the `Protection Only` mode, ***AR1 CLOSE BRK 1*** is reset if either protection operates again in the case of the unsuccessful reclose attempt or 20 ms after Open Pole is reset in case of the successful reclosure attempt.

AR BKR MAN CLOSE

This setting selects a FlexLogic operand that represents manual close command to a breaker associated with the autoreclose scheme.

AR BLK TIME UPON MAN CLS

The autoreclose scheme can be disabled for a programmable time delay after an associated circuit breaker is manually commanded to close, preventing reclosing onto an existing fault such as grounds on the line. This delay must be longer than the slowest expected trip from any protection not blocked after manual closing. If the autoreclose scheme is not initiated after a manual close and this time expires the autoreclose scheme is set to the reset state.

AR 1P INIT

This setting selects a FlexLogic operand that is intended to initiate single-pole autoreclosure.

AR 3P INIT

This setting selects a FlexLogic operand that is intended to initiate three-pole autoreclosure, first timer (***AR 3P DEAD TIME 1***) that can be used for a high-speed autoreclosure.

AR 3P TD INIT

This setting selects a FlexLogic operand intended to initiate three-pole autoreclosure. second timer ***(AR 3P DEAD TIME 2***) can be used for a time-delay autoreclosure. If the operand assigned to this setting and the ***AR 3P INIT*** setting are asserted simultaneously, then autoreclose does not activate the first and second shot timers at the same time. Instead, the priority is given to the AR 3P INIT operand.

AR MULTI-P FAULT

This setting selects a FlexLogic operand that indicates a multi-phase fault. Set the operand value to zero for single-phase to ground faults.

BKR ONE POLE OPEN

This setting selects a FlexLogic operand that indicates that the breaker has opened correctly following a single phase to ground fault and the autoreclose scheme can start timing the single pole dead time (for 1-2 reclose sequence for example, breaker 1 trips single pole and breaker 2 trips 3 pole).

The scheme has a pre-wired input that indicates breaker status.

BKR 3 POLE OPEN

This setting selects a FlexLogic operand that indicates that the breaker has opened three pole and the autoreclose scheme can start timing the three pole dead time. The scheme has a pre-wired input that indicates breaker status.

AR 3-P DEAD TIME 1

This is the dead time following the first three pole trip. This intentional delay can be used for a high-speed three-pole autoreclose. Set it longer than the estimated de-ionizing time following the three-pole trip.

AR 3-P DEAD TIME 2

This is the dead time following the second three-pole trip or initiated by the ***AR 3P TD INIT*** input. This intentional delay is typically used for a time delayed three-pole autoreclose (as opposed to high speed three-pole autoreclose).

AR 3-P DEAD TIME 3

This setting represents the dead time following the third three-pole trip.

AR 3-P DEAD TIME 4

This setting represents the dead time following the fourth three-pole trip.

AR EXTEND DEAD T 1

This setting selects an operand that adapts the duration of the dead time for the first shot to the possibility of non-simultaneous tripping at the two line ends. Typically this is the operand set when the communication channel is out of service.

AR DEAD TIME 1 EXTENSION

This timer sets the length of the dead time 1 extension for possible non-simultaneous tripping of the two ends of the line.

AR RESET

This setting selects the operand that forces the autoreclose scheme from any state to reset. Typically this is a manual reset from lockout, local, or remote.

AR RESET TIME

A reset timer output resets the recloser following a successful reclosure sequence. The setting is based on the breaker time that is the minimum time required between successive reclose sequences.

AR BKR CLOSED

This setting selects an operand that indicates that the breakers are closed at the end of the reset time and the scheme can reset.

AR BLOCK

This setting selects the operand that blocks the autoreclose scheme (it can be a sum of conditions, such as time delayed tripping, breaker failure, and bus differential protection. If the block signal is present before autoreclose scheme initiation, the AR DISABLED FlexLogic operand is set. If the block signal occurs when the scheme is in the RIP state, the scheme is sent to lockout.

AR PAUSE

The pause input offers the ability to freeze the autoreclose cycle until the pause signal disappears. This can be done when a trip occurs and simultaneously or previously, some conditions are detected, such as out-of step or loss of guard frequency, or a remote transfer trip signal is received. The pause signal freezes all four dead timers. When the pause signal disappears, the autoreclose cycle is resumed by continuing the shot timer it left off when paused. This feature can also be used when a transformer is tapped from the protected line and a reclose is not desirable until it is disconnected from the line. In this situation, the reclose scheme pauses until the transformer is disconnected.

AR INCOMPLETE SEQ TIME

This timer is used to set the maximum time interval allowed for a single reclose shot. It is started whenever a reclosure is initiated and is active until the CLOSE BKR1 or CLOSE BKR2 signal is sent. If all conditions allowing a breaker closure are not satisfied when this time expires, the scheme goes to “Lockout”. The minimum permissible setting is established by the ***AR 3-P DEAD TIME 2*** timer setting. Settings beyond this determine the wait time for the breaker to open so that the reclose cycle can continue and/or for the AR PAUSE signal to reset and allow the reclose cycle to continue and/or for the AR BKR1 BLK signal to disappear and allow the AR CLOSE BKR1 signal to be sent.

AR BLOCK BKR2

This input selects an operand that blocks the reclose command for breaker 2. This condition can be for example: breaker low air pressure, reclose in progress on another line (for the central breaker in a breaker and a half arrangement), or a sum of conditions combined in FlexLogic.

AR CLOSE TIME BKR2

This setting represents the closing time for the breaker 2 from the moment the *Close* command is sent to the moment the breaker contacts are closed in the `Protection AND CB` mode or when Open Pole is reset in the `Protection only` mode. In the `Protection Only` mode, ***AR1 CLOSE BRK 1*** is reset if either protection operates again in the case of the unsuccessful reclose attempt or 20 ms after Open Pole is reset in case of a successful reclosure attempt.

AR TRANSFER 1 TO 2

This setting establishes how the scheme performs when the breaker closing sequence is 1-2 and breaker 1 is blocked. When set to `Yes,` the closing command is transferred direct to breaker 2 without waiting the transfer time. When set to `No,` the closing command is blocked by the AR BKR1 BLK signal and the scheme will be sent to lockout by the incomplete sequence timer.

AR TRANSFER 2 TO 1

This setting establishes how the scheme performs when the breaker closing sequence is 2-1 and breaker 2 is blocked. When set to `Yes` the closing command is transferred direct to breaker 1 without waiting the transfer time. When set to `No`, the closing command is blocked by the AR BKR2 BLK signal and the scheme is sent to lockout by the incomplete sequence timer.

AR BKR1 FAIL OPTION

This setting establishes how the scheme performs when the breaker closing sequence is 1-2 and Breaker 1 has failed to close. When set to `Continue` the closing command is transferred to breaker 2, which continues the reclosing cycle until successful (the scheme resets) or unsuccessful (the scheme goes to Lockout). When set to `Lockout` the scheme goes to lockout without attempting to reclose breaker 2.

AR BKR2 FAIL OPTION

This setting establishes how the scheme performs when the breaker closing sequence is 2-1 and Breaker 2 has failed to close. When set to `Continue` the closing command is transferred to breaker 1, which continues the reclosing cycle until successful (the scheme resets) or unsuccessful (the scheme goes to Lockout). When set to `Lockout` the scheme goes to lockout without attempting to reclose breaker 1.

AR 1-P DEAD TIME

Set this intentional delay longer than the estimated de-ionizing time after the first single-pole trip.

AR BREAKER SEQUENCE

This setting selects the breakers reclose sequence: Select `1` for reclose breaker 1 only, `2` for reclose breaker 2 only, `1&2` for reclose both breakers simultaneously, `1-2` for reclose breakers sequentially; Breaker 1 first, and `2-1`

for reclose breakers sequentially; Breaker 2 first. Select `1-2/2-1` to change the breaker reclose sequence dynamically, based on the status of the operand assigned to the ***AR CHNG BRK SEQNCE*** setting.

AR CHNG BKR SEQNCE

This setting selects an operand to activate the change of the close sequence from breaker 1 to breaker 2 and vice versa if the ***AR BREAKER SEQUENCE*** setting is selected to `1-2/2-1` mode. When operand assigned to the ***AR CHNG BRK SEQNCE*** setting is logic 0 then the breakers close sequence is `1-2`, meaning Breaker 1 first. When the operand assigned to the ***AR CHNG BRK SEQNCE*** setting is logic 1 then breakers close sequence is `2-1`, meaing Breaker 2 first. Note that during reclose-in-progress state, the change of the breaker close sequence is not allowed and is executed per selection before reclose-in-progress.

> *Note:*
> *This setting does not apply in the L60 when using a HardFiber or -9-2LE process bus module.*

AR TRANSFER TIME

The transfer time is used only for breaker closing sequence 1-2 or 2-1, when the two breakers are reclosed sequentially. The transfer timer is initiated by a close signal to the first breaker. The transfer timer transfers the reclose signal from the breaker selected to close first to the second breaker. The time delay setting is based on the maximum time interval between the autoreclose signal and the protection trip contact closure assuming a permanent fault (unsuccessful reclose). Therefore, the minimum setting is equal to the maximum breaker closing time plus the maximum line protection operating time plus a suitable margin. This setting prevents the autoreclose scheme from transferring the close signal to the second breaker unless a successful reclose of the first breaker occurs.

AR BUS FLT INIT

This setting is used in breaker-and-a-half applications to allow the autoreclose control function to perform reclosing with only one breaker previously opened by bus protection. For line faults, both breakers must open for the autoreclose reclosing cycles to take effect.

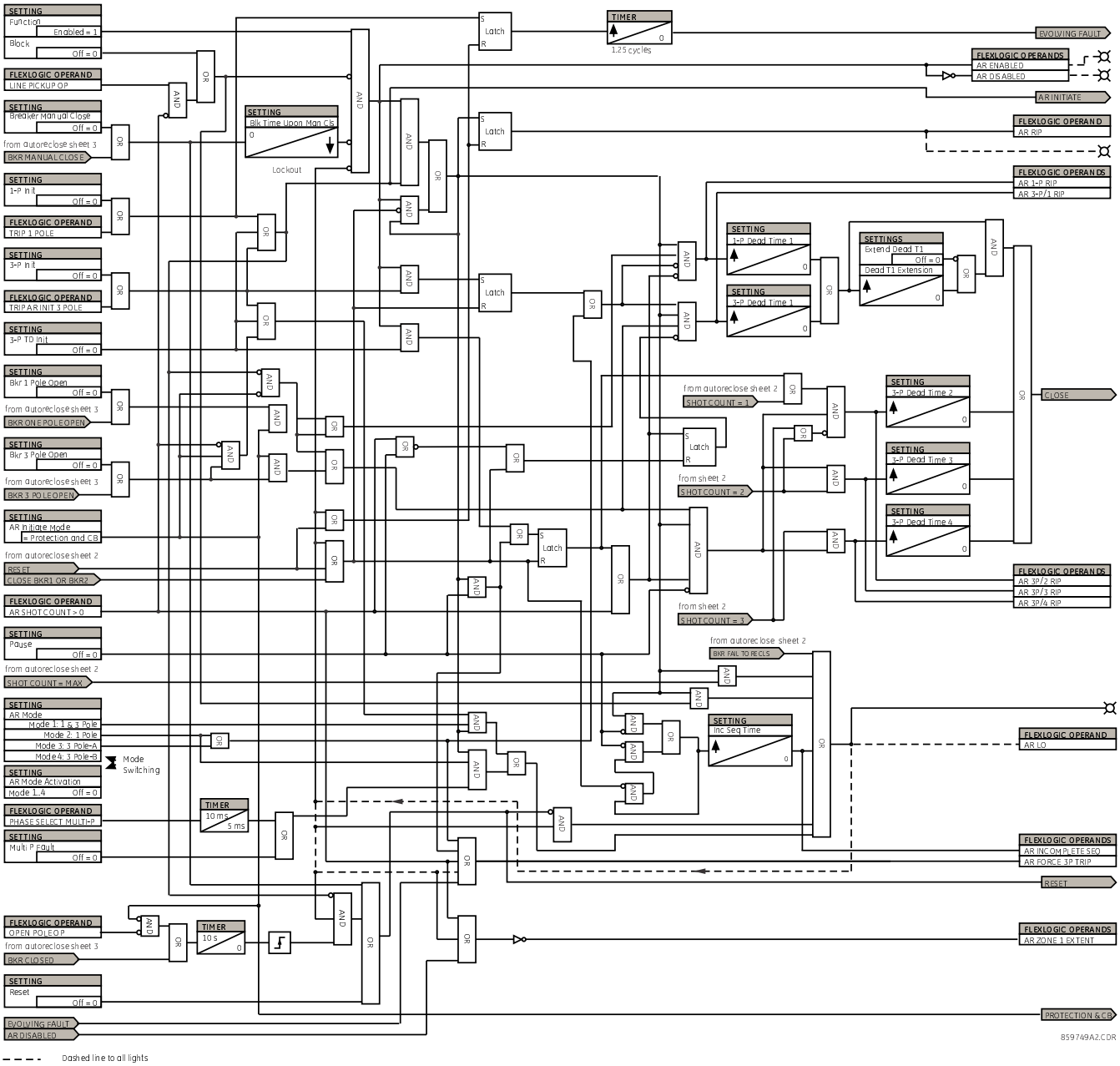

Figure 348: Single-pole autoreclose logic (Sheet 1 of 3)

In runtime, AR mode can be changed through the mode control logic as shown in the following diagram. Initially, the autorecloser runs in the mode as per ***AR MODE*** setting. Then the relay checks the AR activation inputs in each protection pass. The AR mode is switched to the new mode when:

Only one of four activation inputs is high, and

AP RIP operand is low, and

The mode to be activated is different from the current AR mode

The logic allows activation of one mode at a time. Simultaneous multiple activations are ignored and mode switching does not happen. However, the FlexLogic operand AR MODE SWITCH FAIL is asserted if either simultaneous multiple activations are initiated, or a single activation is initiated but recloser is already in progress.

The active AR mode is memorized (latched) on power cycling. This means that the relay uses the last-used mode on power-up. The AR mode resets to the default mode (specified by the ***AR MODE*** setting) when any settings in the autoreclose function are changed.

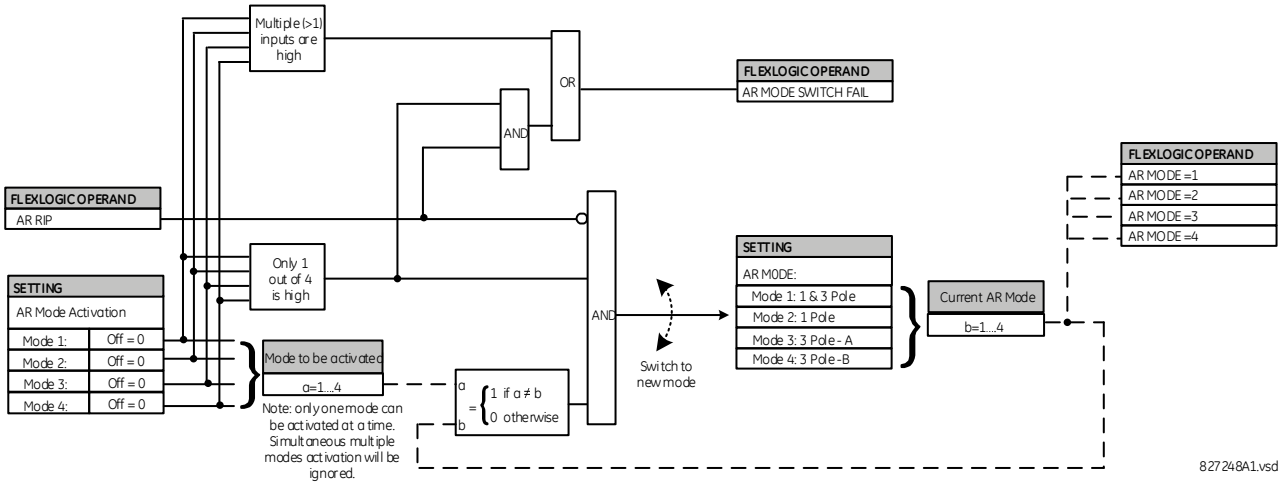

Figure 349: Mode control logic

In addition, the current AR mode is available as FlexLogic Operands because AR Mode equals to 1, 2, 3, and 4 respectively so that it can be monitored and logged.

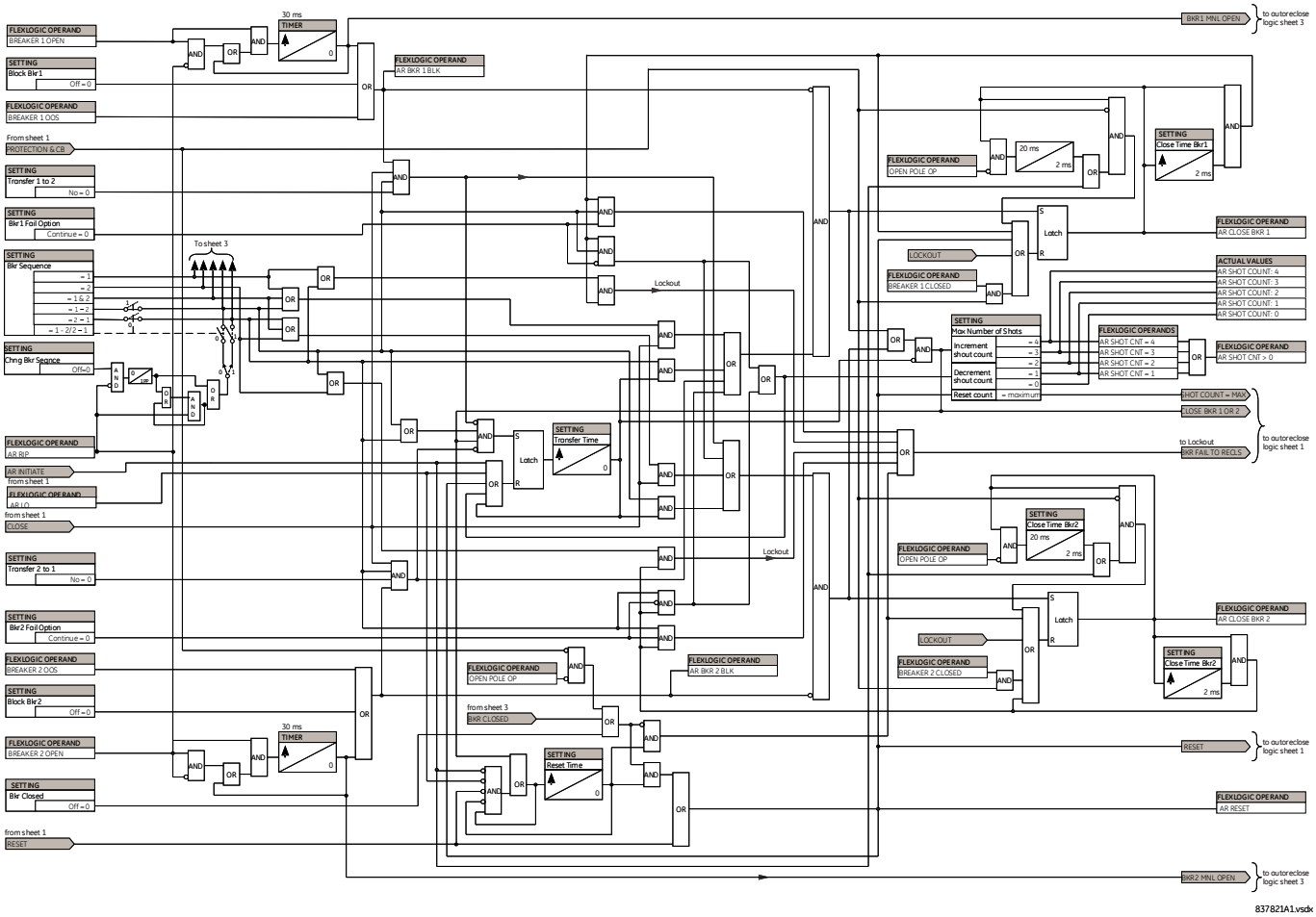

Figure 350: Single-pole autoreclose logic (Sheet 2 of 3)

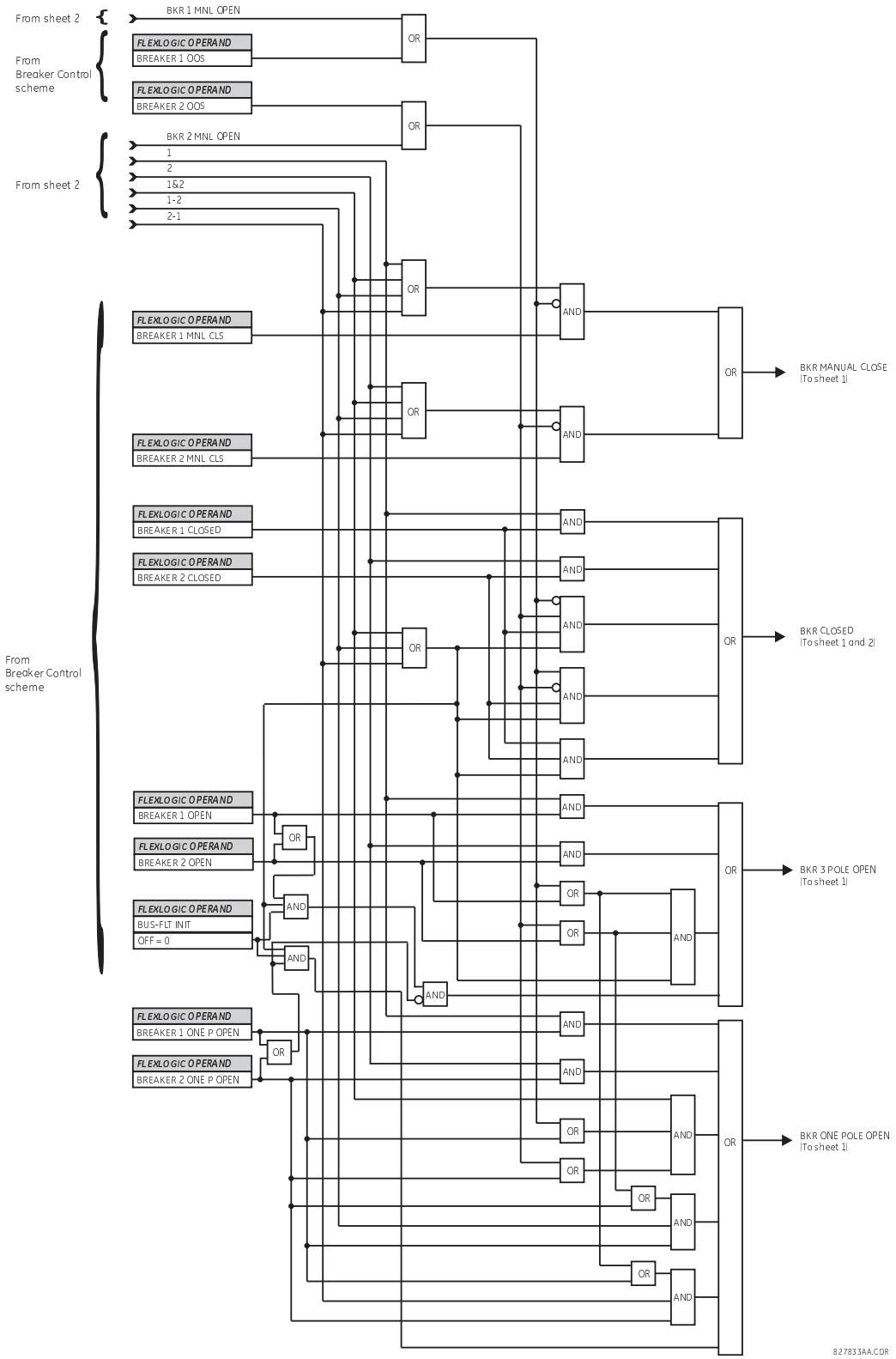

Figure 351: Single-pole autoreclose logic (Sheet 3 of 3)

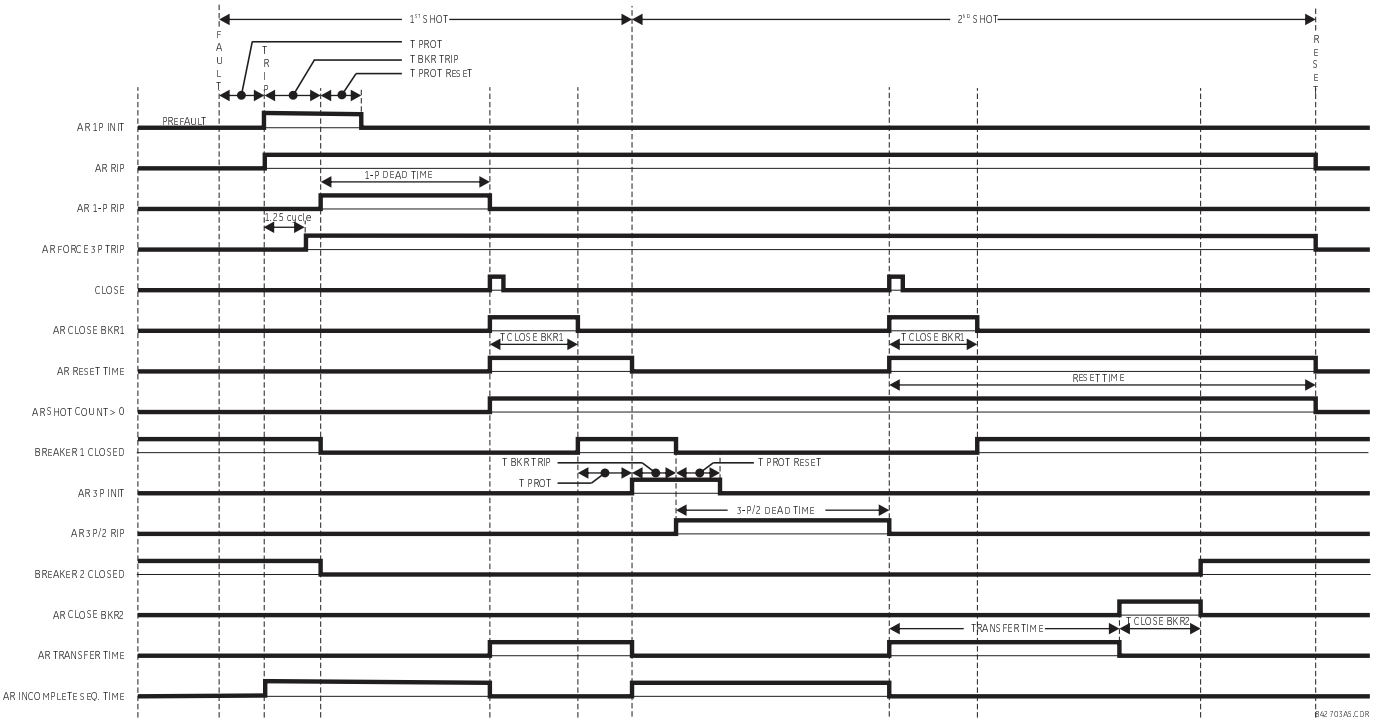

Figure 352: Example of reclosing sequence

9.8.10 DIGITAL ELEMENTS

Setting path: ***SETTINGS > CONTROL ELEMENTS > DIGITAL ELEMENTS> DIGITAL ELEMENTS 1(96)***

> *Note:*
> *Only Digital Element 1 is shown*

■DIGITAL ELEMENT 1 ■	⇔	DIGITAL ELEMENT 1 FUNCTION: Disabled	Range: Disabled, Enabled
	⇕	DIG ELEM 1 NAME: Dig Element 1	Range: up to 16 alphanumeric characters
	⇕	DIG ELEM 1 INPUT: Off	Range: FlexLogic operand
	⇕	DIG ELEM 1 PICKUP DELAY: 0.000 s	Range: 0.000 to 999999.999 s in steps of 0.001
	⇕	DIG ELEM 1 RESET DELAY: 0.000 s	Range: 0.000 to 999999.999 s in steps of 0.001
	⇕	DIGITAL ELEMENT 1 PICKUP LED: Enabled	Range: Disabled, Enabled
	⇕	DIG ELEM 1 BLOCK: Off	Range: FlexLogic operand
	⇕	DIGITAL ELEMENT 1 TARGET: Self-reset	Range: Self-reset, Latched, Disabled
	⇧	DIGITAL ELEMENT 1 EVENTS: Disabled	Range: Disabled, Enabled

> *Note:*
> *Digital elements run once per power system cycle. As such they can easily fail to react to an input signal or a block signal with a duration less than one power system cycle. This also means that digital element output can react up to one power system cycle later than the pickup and reset delay settings indicate.*

> *Note:*
> *Do not use digital elements with transient signals, such as communications commands. Do not use digital elements where random delays of up to one cycle cannot be tolerated, such as in high speed protection.*

There are 96 identical digital elements available, numbered 1 to 96. A digital element can monitor any FlexLogic operand and present a target message and/or enable events recording depending on the output operand state. The digital element settings include a name to be referenced in any target message, a blocking input from any selected FlexLogic operand, and a timer for pickup and reset delays for the output operand.

DIGITAL ELEMENT 1 INPUT

Selects a FlexLogic operand to be monitored by the digital element.

DIGITAL ELEMENT 1 PICKUP DELAY

Sets the required time delay from element pickup to element operation. If a pickup delay is not required, set it to `0`. To avoid nuisance alarms, set the delay greater than the operating time of the breaker.

DIGITAL ELEMENT 1 RESET DELAY

Sets the time delay to reset. If a reset delay is not required, set to `0`.

DIGITAL ELEMENT 1 PICKUP LED

This setting enables or disabled the digital element pickup LED. When disabled, the operation of the pickup LED is blocked.

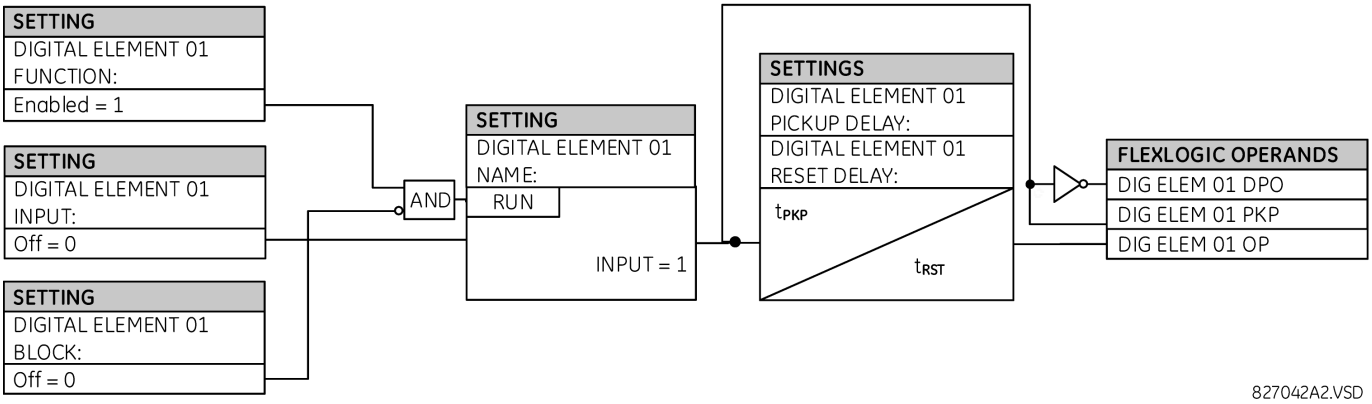

Figure 353: Digital element logic

Circuit monitoring applications

Some versions of the digital input modules include an active voltage monitor circuit connected across form-A contacts. The voltage monitor circuit limits the trickle current through the output circuit (see technical specifications for form-A).

As long as the current through the voltage monitor is above a threshold (see technical specifications for form-A), the Cont Op 1 VOn FlexLogic operand is set (for contact input 1—corresponding operands exist for each contact output). If the output circuit has a high resistance or the DC current is interrupted, the trickle current drops below the

threshold and the Cont Op 1 VOff FlexLogic operand is set. Consequently, the state of these operands can be used as indicators of the integrity of the circuits in which form-A contacts are inserted.

Example 1: Breaker trip circuit integrity monitoring

In many applications it is desired to monitor the breaker trip circuit integrity so that problems can be detected before a trip operation is required. The circuit is considered to be healthy when the voltage monitor connected across the trip output contact detects a low level of current, well below the operating current of the breaker trip coil. If the circuit presents a high resistance, the trickle current falls below the monitor threshold, and an alarm is declared.

In most breaker control circuits, the trip coil is connected in series with a breaker auxiliary contact that is open when the breaker is open (see figure). To prevent unwanted alarms in this situation, the trip circuit monitoring logic must include the breaker position.

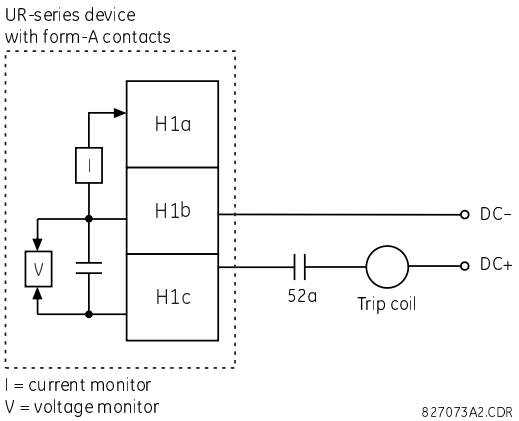

Figure 354: Trip circuit example 1

Assume the output contact H1 is a trip contact. Using the contact output settings, this output is given an ID name; for example, *Cont Op 1*. Assume a 52a breaker auxiliary contact is connected to contact input H5a to monitor breaker status. Using the contact input settings, this input is given an ID name, for example, *Cont Ip 1*, and is set `On` when the breaker is closed. The settings to use digital element 1 to monitor the breaker trip circuit are indicated (EnerVista example shown).

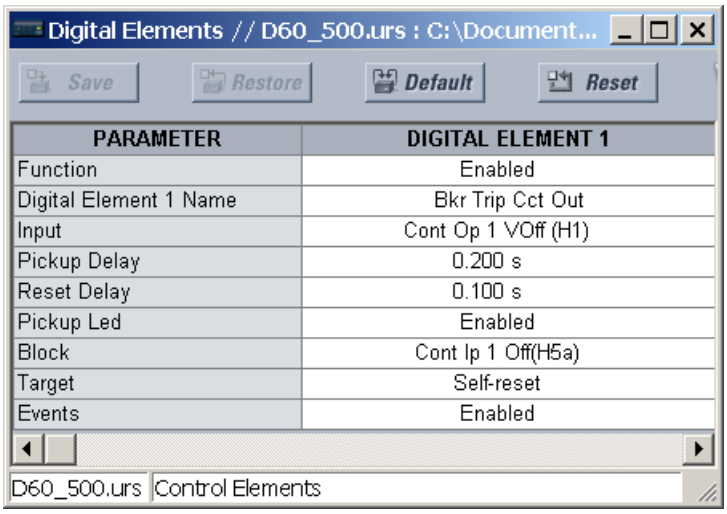

PARAMETER	DIGITAL ELEMENT 1
Function	Enabled
Digital Element 1 Name	Bkr Trip Cct Out
Input	Cont Op 1 VOff (H1)
Pickup Delay	0.200 s
Reset Delay	0.100 s
Pickup Led	Enabled
Block	Cont Ip 1 Off(H5a)
Target	Self-reset
Events	Enabled

Figure 355: Digital Element 1 parameters for Example 1

Example 2: Breaker trip circuit integrity monitoring

If it is required to monitor the trip circuit continuously, independent of the breaker position (open or closed), a method to maintain the monitoring current flow through the trip circuit when the breaker is open must be provided

(as shown in the following figure). This can be achieved by connecting a suitable resistor (see figure) across the auxiliary contact in the trip circuit. In this case, it is not required to supervise the monitoring circuit with the breaker position – the ***BLOCK*** setting is selected to `Off`. In this case, the settings are as follows (EnerVista example shown)

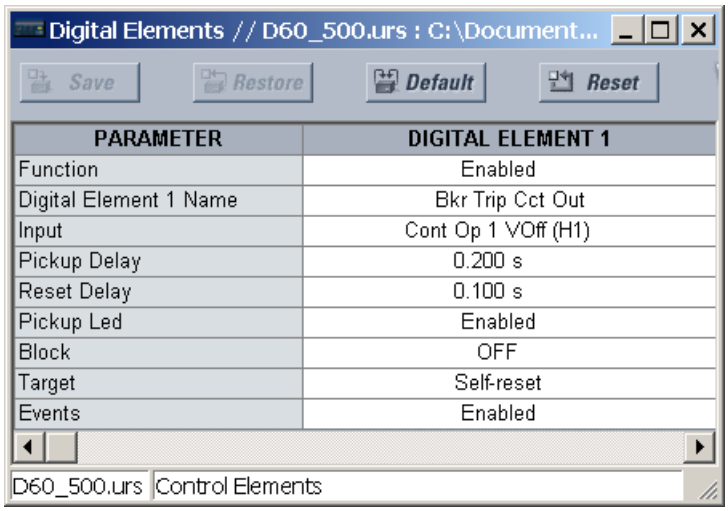

PARAMETER	DIGITAL ELEMENT 1
Function	Enabled
Digital Element 1 Name	Bkr Trip Cct Out
Input	Cont Op 1 VOff (H1)
Pickup Delay	0.200 s
Reset Delay	0.100 s
Pickup Led	Enabled
Block	OFF
Target	Self-reset
Events	Enabled

Figure 356: Digital Element 1 parameters for Example 2

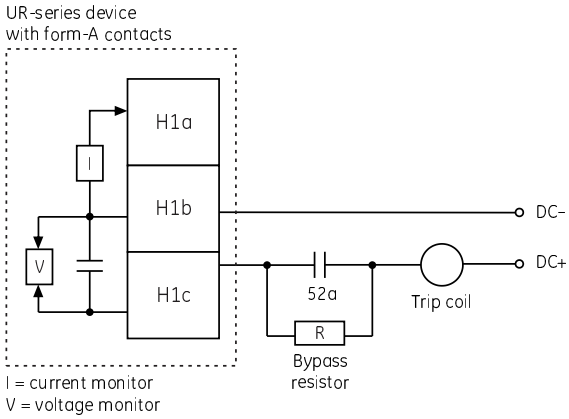

Values for resistor "R"

Power supply	Resistance	Power
24 V DC	1000 Ω	2 W
30 V DC	5000 Ω	2 W
48 V DC	10000 Ω	2 W
110 V DC	25000 Ω	5 W
125 V DC	25000 Ω	5 W
250 V DC	50000 Ω	5 W

Figure 357: Trip circuit example 2

> *Note:*
> *The wiring connection for two examples above is applicable to both form-A contacts with voltage monitoring and solid-state contact with voltage monitoring.*

9.8.11 DIGITAL COUNTERS

Setting path: ***SETTINGS > CONTROL ELEMENTS >DIGITAL COUNTERS > COUNTER 1(8)***

> *Note:*
> *Only Counter 1 is shown*

■ COUNTER 1 ■	⇔	COUNTER 1 FUNCTION: Disabled	Range: Disabled, Enabled
	⇕	COUNTER 1 NAME: Counter 1	Range: up to 12 alphanumeric characters

⇕	COUNTER 1 UNITS:	Range: up to 6 alphanumeric characters
⇕	COUNTER 1 PRESET: 0	Range: –2,147,483,648 to +2,147,483,647
⇕	COUNTER 1 COMPARE: 0	Range: –2,147,483,648 to +2,147,483,647
⇕	COUNTER 1 UP: Off	Range: FlexLogic operand
⇕	COUNTER 1 DOWN: Off	Range: FlexLogic operand
⇕	COUNTER 1 BLOCK: Off	Range: FlexLogic operand
⇕	CNT1 SET TO PRESET: Off	Range: FlexLogic operand
⇕	COUNTER 1 RESET: Off	Range: FlexLogic operand
⇕	COUNT1 FREEZE/RESET: Off	Range: FlexLogic operand
⇧	COUNT1 FREEZE/COUNT: Off	Range: FlexLogic operand

There are eight identical digital counters, numbered from 1 to 8. A digital counter counts the number of state transitions from Logic 0 to Logic 1. The counter is used to count operations such as the pickups of an element, the changes of state of an external contact (for example, breaker auxiliary switch), or pulses from a watt-hour meter.

COUNTER 1 UNITS

Assigns a label to identify the unit of measure pertaining to the digital transitions to be counted. The units label appears in the corresponding actual values status.

COUNTER 1 PRESET

Sets the count to a required preset value before counting operations begin, as in the case where a substitute relay is to be installed in place of an in-service relay, or while the counter is running.

COUNTER 1 COMPARE

Sets the value to which the accumulated count value is compared. Three FlexLogic output operands are provided to indicate if the present value is ‘more than (HI)’, ‘equal to (EQL)’, or ‘less than (LO)’ the set value.

COUNTER 1 UP

Selects the FlexLogic operand for incrementing the counter. If an enabled UP input is received when the accumulated value is at the limit of +2,147,483,647 counts, the counter rolls over to –2,147,483,648.

COUNTER 1 DOWN

Selects the FlexLogic operand for decrementing the counter. If an enabled DOWN input is received when the accumulated value is at the limit of –2,147,483,648 counts, the counter rolls over to +2,147,483,647.

COUNTER 1 BLOCK

Selects the FlexLogic operand for blocking the counting operation. All counter operands are blocked.

CNT1 SET TO PRESET

Selects the FlexLogic operand used to set the count to the preset value. The counter sets to the preset value in the following situations:

- When the counter is enabled and the CNT1 SET TO PRESET operand has the value 1 (when the counter is enabled and CNT1 SET TO PRESET operand is 0, the counter sets to 0)
- When the counter is running and the CNT1 SET TO PRESET operand changes the state from 0 to 1 (CNT1 SET TO PRESET changing from 1 to 0 while the counter is running has no effect on the count)
- When a reset or reset/freeze command is sent to the counter and the CNT1 SET TO PRESET operand has the value 1 (when a reset or reset/freeze command is sent to the counter and the CNT1 SET TO PRESET operand has the value 0, the counter sets to 0)

COUNTER 1 RESET

Selects the FlexLogic operand for setting the count to either “0” or the preset value depending on the state of the CNT1 SET TO PRESET operand.

COUNTER 1 FREEZE/RESET

Selects the FlexLogic operand for capturing (freezing) the accumulated count value into a separate register with the date and time of the operation, and resetting the count to `0`.

COUNTER 1 FREEZE/COUNT

Selects the FlexLogic operand for capturing (freezing) the accumulated count value into a separate register with the date and time of the operation, and continuing counting. The present accumulated value and captured frozen value with the associated date/time stamp are available as actual values. If control power is interrupted, the accumulated and frozen values are saved into non-volatile memory during the power-down operation.

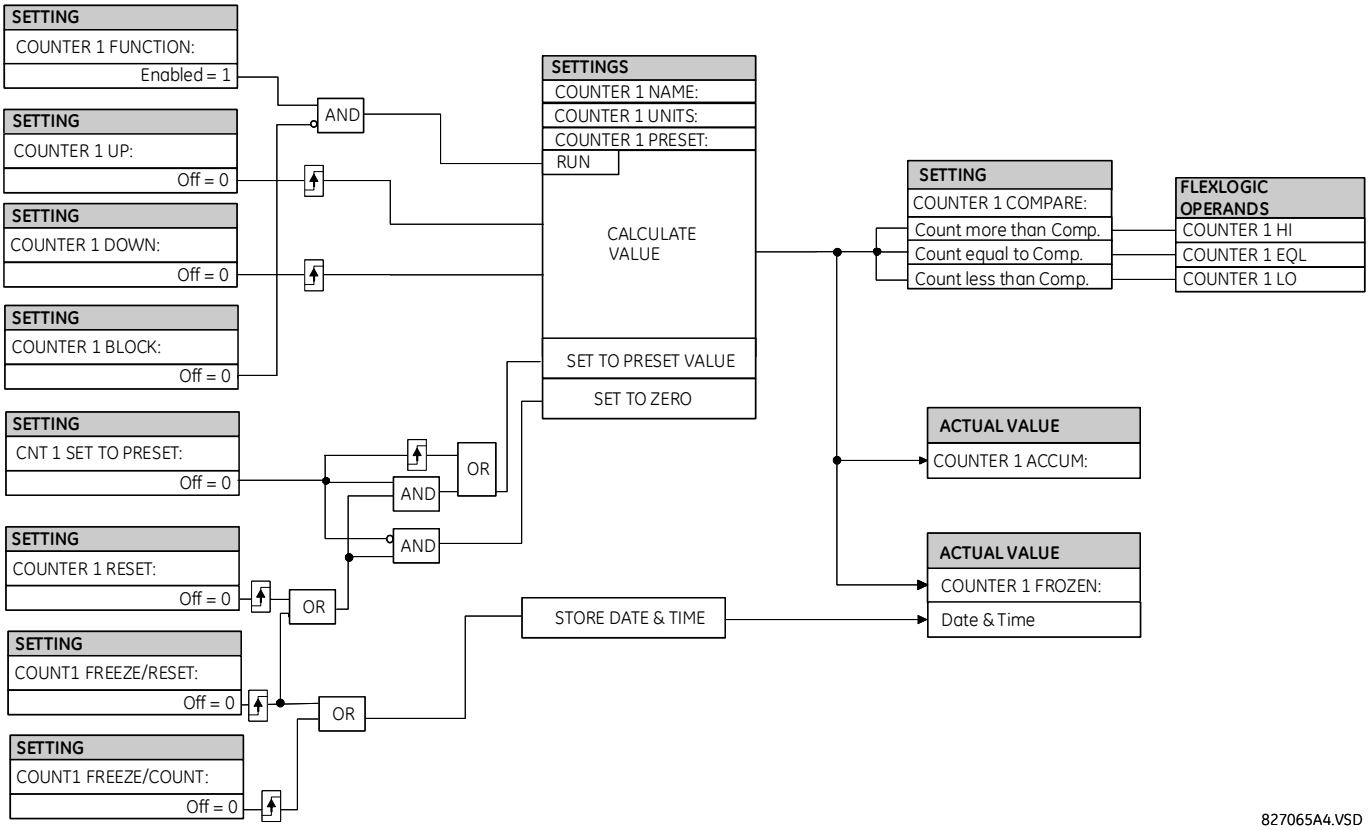

Figure 358: Digital counter logic

9.8.12 PILOT SCHEMES

Setting path: ***SETTINGS > CONTROL ELEMENTS > PILOT SCHEMES***

■ PILOT SCHEMES ■	⇔	■ DUTT SCHEME ■
	⇕	■ PUTT SCHEME ■
	⇕	■ POTT SCHEME ■
	⇕	■ POTT1 SCHEME ■
	⇕	■ HYBRID POTT SCHEME ■
	⇕	■ BLOCKING SCHEME ■
	⇕	■ BLOCKING1 SCHEME ■
	⇑	■ DCUB SCHEME ■

9.8.12.1 DIRECT UNDER-REACHING TRANSFER TRIP (DUTT)

Setting path: ***SETTINGS > CONTROL ELEMENTS > PILOT SCHEMES > DUTT SCHEME***

■ DUTT SCHEME ■	⇔	DUTT SCHEME FUNCTION: Disabled	Range: Disabled, Enabled
	⇕	DUTT SCHEME BLOCK: Off	Range: FlexLogic operand
	⇕	DUTT SEAL-IN DELAY: 0.000 s	Range: 0.000 to 65.535 s in steps of 0.001
	⇕	DUTT NO OF COMM BITS: 1	Range: 1, 2, or 4
	⇕	DUTT RX1: Off	Range: FlexLogic operand
	⇕	DUTT RX2: Off	Range: FlexLogic operand
	⇕	DUTT RX3: Off	Range: FlexLogic operand
	⇕	DUTT RX4: Off	Range: FlexLogic operand
	⇕	DUTT SCHEME TARGET: Self-reset	Range: Self-Reset, Latched, Disabled
	⇑	DUTT SCHEME EVENT: Disabled	Range: Disabled, Enabled

Note:
*When the **SV TRBL PRT BLOCK** setting is set to partial and if the distance source uses sampled values, it is recommended to use the SV TRBL PARTIAL BLK operand to block the DUTT scheme.*

This scheme uses an under-reaching Zone 1 distance element to key a transfer trip signal(s) to the remote end(s), where on receipt, the DUTT pilot scheme operates without additional protection supervision. For proper operation of the scheme, the Zone 1 phase and ground distance elements must be enabled, configured, and set per rules of distance relaying.

In single-pole tripping applications, the scheme uses local fault type identification provided by the Phase Selector together with information received from the remote terminal(s). The latter can be coded into one, two, or four bits over the communications channel.

The scheme generates output operands (DUTT TX1 through DUTT TX4) that are used to transmit the direct under-reaching signals to the remote end(s). Choices of communications channel include remote inputs/outputs and telecommunications interfaces. When used with telecommunications facilities, assign the output operands to operate output contacts connected to assert the individual bits at the interface.

To make the scheme a fully operational stand-alone feature, the scheme output operands must be configured to interface with other relay functions, output contacts in particular. Typically, you program the output operands to initiate a trip, breaker fail, and autoreclose, and drive a user-programmable LED as per user application. When used in conjunction with the trip output element, the scheme is pre-configured to initiate trip, breaker fail, and single-pole autoreclose actions.

DUTT SCHEME BLOCK

This setting allows the user to assign any FlexLogic operand to block the scheme. Contact inputs from a pilot cut-out switch are typically used for this purpose.

DUTT SEAL-IN DELAY

The output FlexLogic operand (DUTT OP) is produced according to the DUTT scheme logic. A seal-in time delay is applied to this operand for coping with noisy communication channels such as a power line carrier. The ***DUTT SEAL-IN DELAY*** is a minimum guaranteed duration of the DUTT OP pulse. As this operand activates the Trip Table of the DUTT scheme, the trip operands DUTT TRIP A, B, C, and 3P are sealed-in for the same period of time.

DUTT NO OF COMM BITS

This setting specifies the number of bits available on the communications channel. With only one bit available, the scheme sends the direct under-reaching transfer trip command on bit number 1 (DUTT TX1 operand) and responds to the direct trip command received on bit number 1 (***DUTT RX1*** setting). The scheme uses only local fault type identification provided by the Phase Selector to assert the output operands DUTT TRIP A, B, C, and 3P.

DUTT RX1 through DUTT RX4

These settings allow the user to select the FlexLogic operands that represent the receive signals for the scheme. Typically input contacts interfacing with a signaling system are used.

The DUTT scheme requires a secure and dependable signaling system. For this reason, a series/parallel combination of receive signal “contacts” is often used. This is accomplished by using a multi-bit communications system to transmit redundant copies of the TX signal (often via different paths) and building appropriate security logic (such as series (AND gate) or 2-out-of-3 voting logic) with FlexLogic. The ***DUTT RX1(4)*** settings should be associated with the final (secure) TX signals.

In single-bit applications, ***DUTT RX1*** must be used. In two-bit applications, ***DUTT RX1*** and ***DUTT RX2*** must be used. In four-bit applications, ***DUTT RX1, DUTT RX2, DUTT RX3***, and ***DUTT RX4*** must be used. In multi-terminal applications, connect the RX signals from two or more remote terminals through OR gates in the FlexLogic, and configure the resulting signals as the DUTT RX inputs.

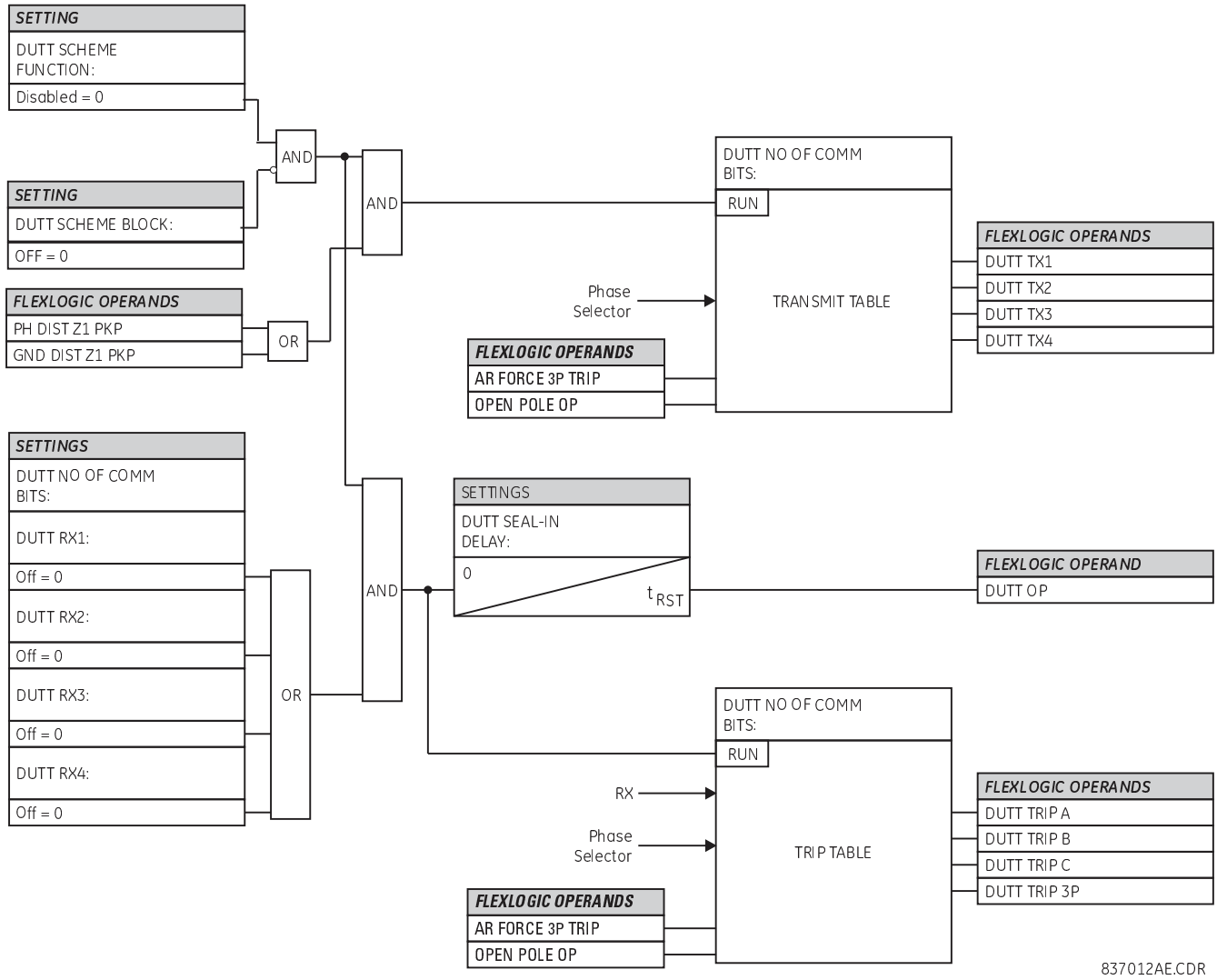

Figure 359: DUTT scheme logic

9.8.12.2 PERMISSIVE UNDER-REACHING TRANSFER TRIP (PUTT)

Setting path: ***SETTINGS > CONTROL ELEMENTS > PILOT SCHEMES > PUTT SCHEME***

■ PUTT SCHEME ■	⇔	PUTT SCHEME FUNCTION: Disabled — Range: Disabled, Enabled
	⇕	PUTT SCHEME BLOCK: Off — Range: FlexLogic operand
	⇕	PUTT RX PICKUP DELAY: 0.000 s — Range: 0.000 to 65.535 s in steps of 0.001
	⇕	PUTT SEAL-IN DELAY: 0.000 s — Range: 0.000 to 65.535 s in steps of 0.001
	⇕	PUTT NO OF COMM BITS: 1 — Range: 1, 2, or 4
	⇕	PUTT RX1: Off — Range: FlexLogic operand
	⇕	PUTT RX2: Off — Range: FlexLogic operand

⇕	PUTT RX3: Off	Range: FlexLogic operand
⇕	PUTT RX4: Off	Range: FlexLogic operand
⇕	PUTT SCHEME TARGET: Self-reset	Range: Self-Reset, Latched, Disabled
⇧	PUTT SCHEME EVENT: Disabled	Range: Disabled, Enabled

This scheme uses an under-reaching zone 1 distance element to key a transfer trip signal(s) to the remote terminal(s) where it is supervised by an over-reaching zone 2 distance element. For proper operation, the zone 1 and 2 phase and ground distance elements must be enabled, configured, and set per rules of distance relaying.

In single-pole tripping applications, the scheme uses local fault type identification provided by the phase selector together with information received from the remote terminal(s). The scheme generates output operands (PUTT TX1 through PUTT TX4) that are used to transmit the signal to the remote end(s). Choices of communications channel include remote inputs/outputs and telecommunications interfaces. When used with telecommunications facilities, assign the output operands to operate output contacts connected to assert the individual bits at the interface.

To make the scheme a fully operational stand-alone feature, the scheme output operands must be configured to interface with other relay functions, output contacts in particular. Typically, you program the output operands to initiate a trip, breaker fail, and autoreclose, and drive a user-programmable LED as per user application. When used in conjunction with the Trip Output element, the scheme is pre-configured to initiate trip, breaker fail and single-pole autoreclose actions.

PUTT SCHEME BLOCK

This setting allows the user to assign any FlexLogic operand to block the scheme. Contact inputs from a pilot cut-out switch are typically used for this purpose.

PUTT RX PICKUP DELAY

This setting enables the relay to cope with spurious receive signals. Set this delay longer than the longest spurious TX signal that can be received simultaneously with the zone 1 pickup. The selected delay increases the response time of the scheme.

PUTT SEAL-IN DELAY

The output FlexLogic operand (PUTT OP) is produced according to the PUTT scheme logic. A seal-in time delay is applied to this operand for coping with noisy communication channels such as a power line carrier. The ***PUTT SEAL-IN DELAY*** is a minimum guaranteed duration of the PUTT OP pulse. As this operand activates the trip table of the PUTT scheme, the trip operands PUTT TRIP A, B, C, and 3P are sealed-in for the same period of time.

PUTT NO OF COMM BITS

This setting specifies the number of bits of the communications channel available for the scheme. The transmit codes and trip table of the PUTT scheme are identical as those for the direct under-reaching transfer trip scheme.

PUTT RX1 through PUTT RX4

These settings allow the user to select the FlexLogic operands that represent the receive signals for the scheme. Typically input contacts interfacing with a signaling system are used. In single-bit applications, ***PUTT RX1*** must be used. In two-bit applications, ***PUTT RX1*** and ***PUTT RX2*** must be used. In four-bit applications, ***PUTT RX1***, ***PUTT RX2***, ***PUTT RX3***, and ***PUTT RX4*** must be used. In multi-terminal applications, connect the RX signals from two or more remote terminals through OR gates in the FlexLogic, and configure the resulting signals as the PUTT RX inputs.

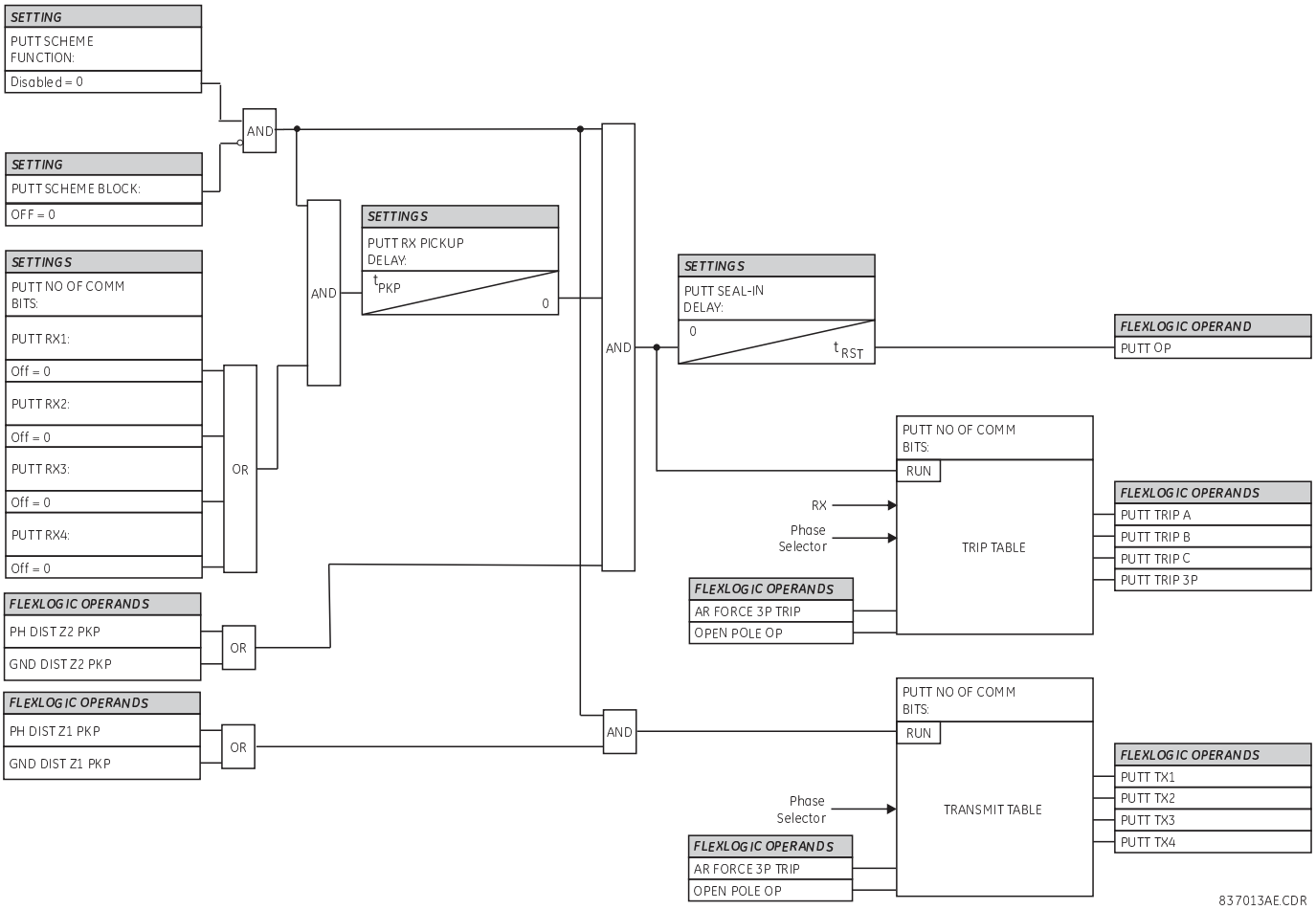

Figure 360: PUTT scheme logic

9.8.12.3 PERMISSIVE OVER-REACHING TRANSFER TRIP (POTT)

Setting path: ***SETTINGS > CONTROL ELEMENTS > PILOT SCHEMES > POTT SCHEME***

■ POTT SCHEME ■	⇔	POTT SCHEME FUNCTION: Disabled — Range: Disabled, Enabled
	⇕	POTT PERMISSIVE ECHO: Disabled — Range: Disabled, Enabled
	⇕	POTT RX PICKUP DELAY: 0.000 s — Range: 0.000 to 65.535 s in steps of 0.001
	⇕	TRANS BLOCK PICKUP DELAY: 0.020 s — Range: 0.000 to 65.535 s in steps of 0.001
	⇕	TRANS BLOCK RESET DELAY: 0.090 s — Range: 0.000 to 65.535 s in steps of 0.001
	⇕	ECHO DURATION: 0.100 s — Range: 0.000 to 65.535 s in steps of 0.001
	⇕	ECHO LOCKOUT: 0.250 s — Range: 0.000 to 65.535 s in steps of 0.001
	⇕	LINE END OPEN PICKUP DELAY: 0.050 s — Range: 0.000 to 65.535 s in steps of 0.001
	⇕	POTT SEAL-IN DELAY: 0.400 s — Range: 0.000 to 65.535 s in steps of 0.001

⇕	GND DIR O/C FWD: Off	Range: FlexLogic operand
⇕	POTT RX: Off	Range: FlexLogic operand
⇕	POTT SCHEME TARGET: Self-reset	Range: Self-Reset, Latched, Disabled
⇧	POTT SCHEME EVENT: Disabled	Range: Disabled, Enabled

This scheme is intended for two-terminal line applications only. It uses an over-reaching zone 2 distance element to essentially compare the direction to a fault at both the ends of the line. Ground directional overcurrent functions available in the relay can be used in conjunction with the zone 2 distance element to key the scheme and initiate its operation. This provides increased coverage for high resistance faults.

For proper scheme operation, enable and configure the zone 2 phase and ground distance elements per the rules of distance relaying. Enable and configure the line pickup element to detect line-end-open/weak-infeed conditions. If used by this scheme, enable and configure the selected ground directional overcurrent functions accordingly.

POTT PERMISSIVE ECHO

When enabled, this setting results in a permissive echo signal being sent to the remote end. The permissive signal is echoed back upon receiving a reliable POTT RX signal from the remote end while the line-end-open condition is identified by the line pickup logic. The permissive echo is programmed as a one-shot logic. The echo is sent only once and then the echo logic locks out for a settable period of time (***ECHO LOCKOUT*** setting). The duration of the echo pulse does not depend on the duration or shape of the received POTT RX signal but is settable as ***ECHO DURATION***.

POTT RX PICKUP DELAY

This setting enables the relay to cope with spurious receive signals. Set the delay longer than the longest spurious TX signal that can occur simultaneously with the zone 2 pickup. The selected delay increases the response time of the scheme.

TRANS BLOCK PICKUP DELAY

This setting defines a transient blocking mechanism embedded in the POTT scheme for coping with the exposure of a ground directional overcurrent function (if used) to current reversal conditions. The transient blocking mechanism applies to the ground overcurrent path only as the reach settings for the zone 2 distance functions is not expected to be long for two-terminal applications, and the security of the distance functions is not endangered by the current reversal conditions. Upon receiving the POTT RX signal, the transient blocking mechanism allows the RX signal to be passed and aligned with the ***GND DIR O/C FWD*** indication only for a period of time defined as ***TRANS BLOCK PICKUP DELAY***. After that the ground directional overcurrent path is virtually disabled for a period of time specified as ***TRANS BLOCK RESET DELAY***.

Set the ***TRANS BLOCK PICKUP DELAY*** long enough to give the selected ground directional overcurrent function time to operate, but not longer than the fastest possible operation time of the protection system that can create current reversal conditions within the reach of the selected ground directional overcurrent function. For this setting, also take into account the ***POTT RX PICKUP DELAY***. The POTT RX signal is shaped for aligning with the ground directional indication as follows: the original RX signal is delayed by the ***POTT RX PICKUP DELAY***, then terminated at ***TRANS BLOCK PICKUP DELAY*** after the pickup of the original POTT TX signal, and eventually, locked-out for ***TRANS BLOCK RESET DELAY***.

TRANS BLOCK RESET DELAY

This setting defines a transient blocking mechanism embedded in the POTT scheme for coping with the exposure of a ground directional overcurrent function (if used) to current reversal conditions (see also the ***TRANS BLOCK PICKUP DELAY***). Set this delay long enough to cope with transient conditions including not only current reversals

but also spurious negative and zero-sequence currents occurring during breaker operations. The breaker failure time of the surrounding protection systems within the reach of the ground directional function used by the POTT scheme can be considered to make sure that the ground directional function is not jeopardized during delayed breaker operations.

ECHO DURATION

This setting defines the guaranteed and exact duration of the echo pulse. The duration does not depend on the duration and shape of the received POTT RX signal. This setting enables the relay to avoid a permanent lock-up of the transmit/receive loop.

ECHO LOCKOUT

This setting defines the lockout period for the echo logic after sending the echo pulse.

LINE END OPEN PICKUP DELAY

This setting defines the pickup setting for validation of the line end open conditions as detected by the Line Pickup logic through the LINE PICKUP LEO PKP FlexLogic operand. The validated line end open condition is a requirement for the POTT scheme to return a received echo signal (if the echo feature is enabled). Also for this setting, take into account the principle of operation and settings of the line pickup element.

POTT SEAL-IN DELAY

The output FlexLogic operand (POTT OP) is produced according to the POTT scheme logic. A seal-in time delay is applied to this operand for coping with noisy communication channels. This setting specifies a minimum guaranteed duration of the POTT OP pulse.

GND DIR O/C FWD

This setting selects the FlexLogic operand (if any) of a protection element used in addition to zone 2 for identifying faults on the protected line, and thus, for keying the communication channel and initiating operation of the scheme. Good directional integrity is the key requirement for an over-reaching forward-looking protection element used as ***GND DIR O/C FWD***. Even though any FlexLogic operand can be used as ***GND DIR O/C FWD*** allowing the user to combine responses of various protection elements, or to apply extra conditions through FlexLogic equations, this extra signal is primarily meant to be the output operand from either the negative-sequence directional overcurrent or neutral directional overcurrent elements. Both of these elements have separate forward and reverse output operands. The forward indication should be used (***NEG SEQ DIR OC1 FWD*** or ***NEUTRAL DIR OC1 FWD***). For greater security and to overcome spurious directional element operation during transients, adding at least 0.5 cycles of pickup delay to the forward directional element is recommended.

POTT RX

This setting enables the user to select the FlexLogic operand that represents the receive signal (RX) for the scheme. Typically an input contact interfacing with a signaling system is used. Other choices include remote inputs and FlexLogic equations. The POTT transmit signal (TX) should be appropriately interfaced with the signaling system by assigning the output FlexLogic operand (POTT TX) to an output contact. The remote output mechanism is another choice.

The output operand from the scheme (POTT OP) must be configured to interface with other relay functions, output contacts in particular, in order to make the scheme fully operational. Typically, the output operand should be programmed to initiate a trip, breaker fail, and autoreclose, and drive a user-programmable LED as per user application.

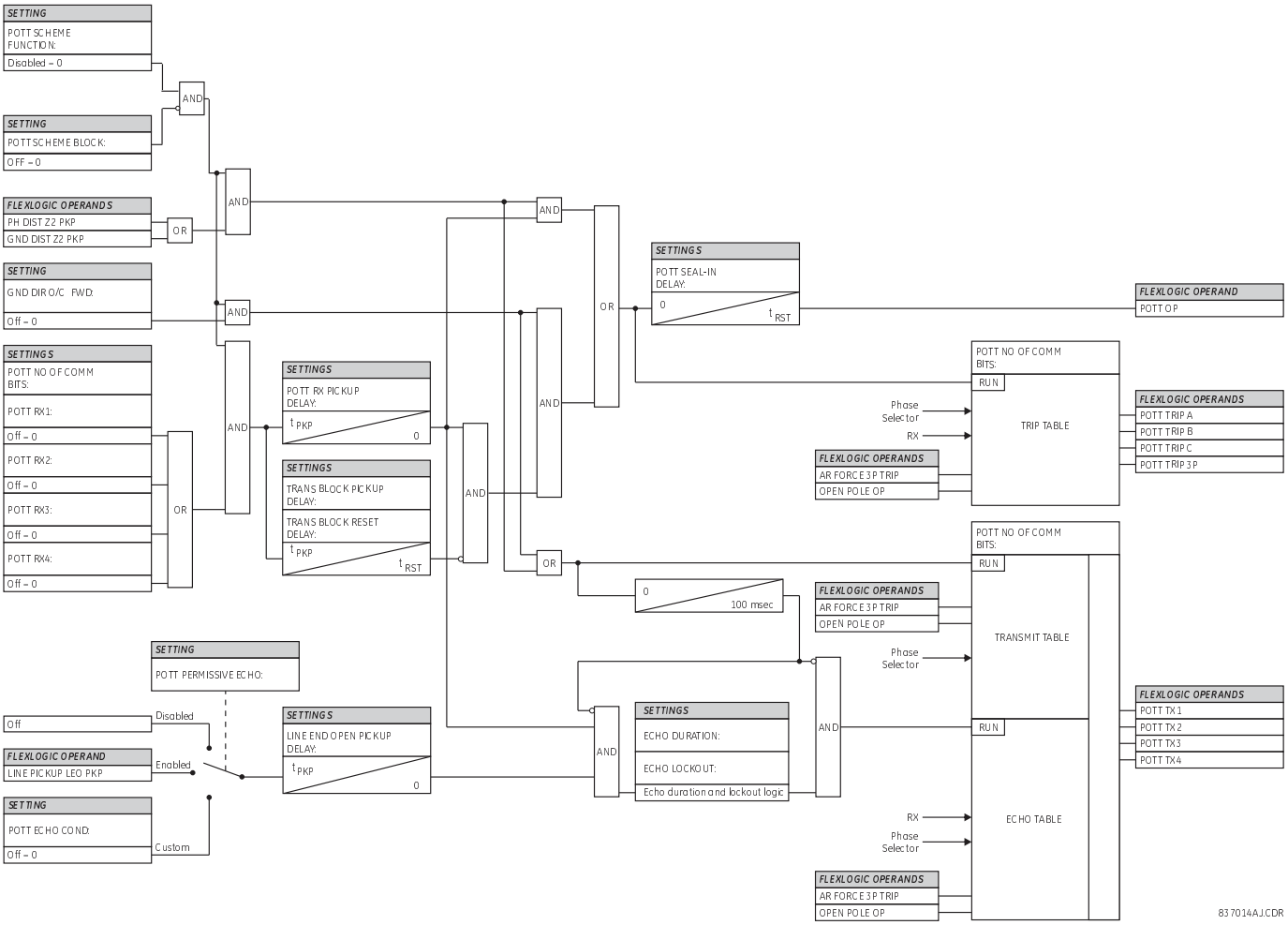

Figure 361: POTT scheme logic

9.8.12.4 PERMISSIVE OVER-REACHING TRANSFER TRIP (POTT1)

Setting path: ***SETTINGS > CONTROL ELEMENTS > PILOT SCHEMES > POTT1 SCHEME***

■ POTT 1 SCHEME ■	⇔	POTT SCHEME FUNCTION: Disabled	Range: Disabled, Enabled
	⇕	POTT1 SCHEME BLOCK: Off	Range: FlexLogic operand
	⇕	POTT1 PERMISSIVE ECHO: Disabled	Range: Disabled, Enabled, Custom
		POTT1 ECHO COND: Off	Range: FlexLogic operand
	⇕	POTT1 RX PICKUP DELAY: 0.000 s	Range: 0.000 to 65.535 s in steps of 0.001
	⇕	TRANS BLOCK PICKUP DELAY: 0.020 s	Range: 0.000 to 65.535 s in steps of 0.001
	⇕	TRANS BLOCK RESET DELAY: 0.090 s	Range: 0.000 to 65.535 s in steps of 0.001
	⇕	ECHO DURATION: 0.100 s	Range: 0.000 to 65.535 s in steps of 0.001

⇕	ECHO LOCKOUT: 0.250 s	Range: 0.000 to 65.535 s in steps of 0.001
⇕	LINE END OPEN PICKUP DELAY: 0.050 s	Range: 0.000 to 65.535 s in steps of 0.001
⇕	POTT1 SEAL-IN DELAY: 0.010 s	Range: 0.000 to 65.535 s in steps of 0.001
⇕	DIR FWD1: Off	Range: FlexLogic operand
⇕	DIR FWD2: Off	Range: FlexLogic operand
⇕	DIR FWD3: Off	Range: FlexLogic operand
⇕	POTT1 NO OF COMM BITS: 1	Range: 1, 2, or 4
⇕	POTT1 RX1: Off	Range: FlexLogic operand
⇕	POTT1 RX2: Off	Range: FlexLogic operand
⇕	POTT1 RX3: Off	Range: FlexLogic operand
⇕	POTT1 RX4: Off	Range: FlexLogic operand
⇕	POTT1 SCHEME TARGET: Self-reset	Range: Self-Reset, Latched, Disabled
⇧	POTT1 SCHEME EVENT: Disabled	Range: Disabled, Enabled

The POTT1 pilot scheme operates the same way as the POTT scheme, except hard-coded connections to phase and ground distance elements are removed to allow the user to choose directional elements, for example ground OC directional elements. This allows a user to apply the POTT1 scheme using solely directional elements to achieve better coordination, rather than mixing distance and ground OC directional elements together.

The settings and application guidance for the POTT scheme applies to the POTT1 scheme. See the POTT section.

DIR FWD1..3

This setting defines the FlexLogic operand of a protection element used for keying the communication channel and initiating operation of the scheme. Good directional integrity is the key requirement for an over-reaching forward-looking protection element used as DIR FWD.

Even though any FlexLogic operand can be used as DIR FWD allowing the user to combine responses of various protection elements, or to apply extra security conditions through FlexLogic equations, this signal is primarily meant to be the output operand from either the Negative-Sequence Directional IOC or Neutral Directional IOC. Both of these elements have separate forward (FWD) and reverse (REV) output operands. The forward indication is used (***NEG SEQ DIR OC1 FWD*** or ***NEUTRAL DIR OC1 FWD***).

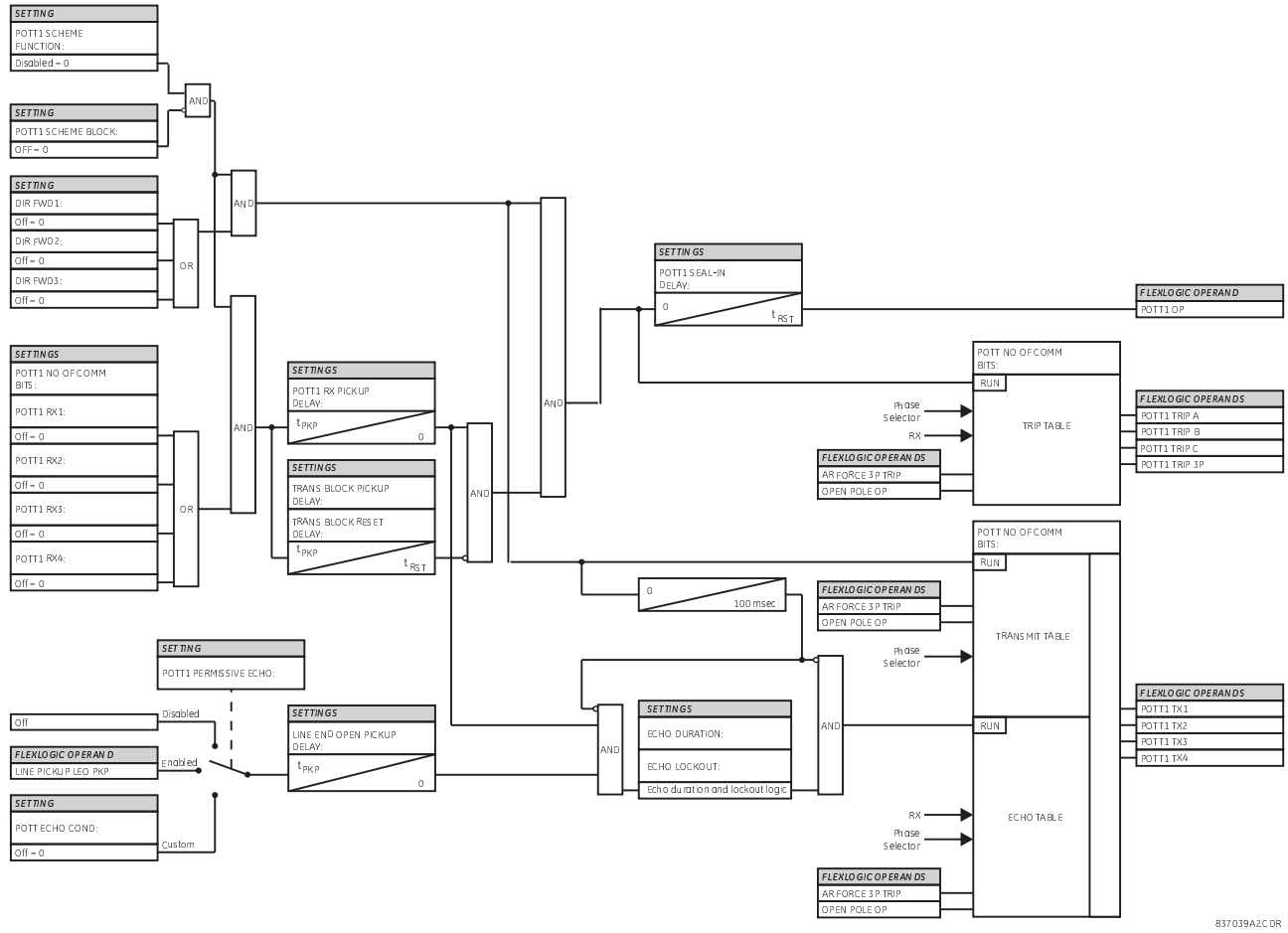

Figure 362: POTT1 (ground) scheme logic

9.8.12.5 HYBRID PERMISSIVE OVER-REACHING TRANSFER TRIP

Setting path: ***SETTINGS > CONTROL ELEMENTS > PILOT SCHEMES > HYBRID POTT SCHEME***

■ HYBRID POTT SCHEME ■	⇔	HYBRID POTT SCHEME FUNCTION: Disabled	Range: Disabled, Enabled
	⇕	HYB POTT BLOCK: Off	Range: FlexLogic operand
	⇕	HYB POTT PERMISSIVE ECHO: Disabled	Range: Disabled, Enabled, Custom
	⇕	HYB POTT ECHO COND: Off	Range: FlexLogic operand
	⇕	HYB POTT WEAK INFEED: Enabled	Range: Disabled, Enabled, Custom
	⇕	HYB POTT W/I COND: Off	Range: FlexLogic operand
	⇕	HYB POTT RX PICKUP DELAY: 0.000 s	Range: 0.000 to 65.535 s in steps of 0.001
	⇕	TRANS BLOCK PICKUP DELAY: 0.020 s	Range: 0.000 to 65.535 s in steps of 0.001
	⇕	TRANS BLOCK RESET DELAY: 0.090 s	Range: 0.000 to 65.535 s in steps of 0.001

⇕	ECHO DURATION: 0.100 s	Range: 0.000 to 65.535 s in steps of 0.001
⇕	ECHO LOCKOUT: 0.250 s	Range: 0.000 to 65.535 s in steps of 0.001
⇕	HYB POTT SEAL-IN DELAY: 0.000 s	Range: 0.000 to 65.535 s in steps of 0.001
⇕	GND DIR O/C FWD: Off	Range: FlexLogic operand
⇕	GND DIR O/C REV: Off	Range: FlexLogic operand
⇕	HYB POTT NO OF COMM BITS: 1	Range: 1, 2, or 4
⇕	HYB POTT RX1: Off	Range: FlexLogic operand
⇕	HYB POTT RX2: Off	Range: FlexLogic operand
⇕	HYB POTT RX3: Off	Range: FlexLogic operand
⇕	HYB POTT RX4: Off	Range: FlexLogic operand
⇕	HYB POTT SCHEME TARGET: Self-reset	Range: Self-Reset, Latched, Disabled
⇧	HYB POTT EVENT: Disabled	Range: Disabled, Enabled

Generally, this scheme uses an overreaching zone 2 distance element to essentially compare the direction to a fault at all terminals of the line. Ground directional overcurrent functions available in the Product can be used in conjunction with the zone 2 distance element to key the scheme and initiate operation. This increases the coverage for high-resistance faults.

The scheme is intended for three-terminal and two-terminal applications with weak-infeed conditions. As a long reach of the overreaching distance element can be required for three-terminal applications, transient blocking logic is provided for both distance and ground directional overcurrent elements. In order to cope with weak-infeed conditions, an echo feature is made available.

By default the scheme uses the reverse-looking zone 4 distance element to identify reverse faults. Additionally, reverse-looking ground directional overcurrent functions can be used in conjunction with the zone 4.

For proper operation, the zone 2 and 4 phase and ground distance elements must be enabled, configured, and set per rules of distance relaying. Enable the line pickup element, configure it, and set properly to detect line-end-open/weak-infeed and undervoltage conditions. If used by the scheme, the selected ground directional overcurrent function(s) must be enabled, configured, and set accordingly.

In single-pole tripping applications, the scheme uses local fault type identification provided by the phase selector together with information received from the remote terminal. The scheme generates output operands (HYBRID POTT TX1 through HYBRID POTT TX4) that are used to transmit the signal to the remote terminal(s). Choices of communications channel include remote inputs/outputs and telecommunications interfaces. When used with telecommunications facilities, assign the output operand to operate an output contact connected to key the transmitter at the interface. When used with telecommunications facilities, assign the output operands to operate output contacts connected to assert the individual bits at the interface.

To make the scheme fully operational as a stand-alone feature, the scheme output operands must be configured to interface with other relay functions, output contacts in particular. Typically, you program the output operands to initiate a trip, breaker fail, and autoreclose, and drive a user-programmable LED as per user application.

When used in conjunction with the trip output element, the scheme is pre-configured to initiate trip, breaker fail, and single-pole autoreclose actions.

HYB POTT BLOCK

This setting allows the user to assign any FlexLogic operand to block the scheme. Contact inputs from a pilot cut-out switch are typically used for this purpose.

HYB POTT PERMISSIVE ECHO

If set to `Enabled`, the scheme sends a permissive echo signal to the remote end(s) using a pre-programmed logic (see logic diagram below). If set to `Custom`, the echo signal is sent if a condition selected via the ***HYB POTT ECHO COND*** setting is satisfied. The echo is sent only once and then the logic locks out for the time specified by the ***ECHO LOCKOUT*** setting. The duration of the echo pulse is settable as ***ECHO DURATION***. Operation of the overreaching protection elements (distance zone 2 or ***GND DIR O/C FWD*** setting) inhibits the echo.

HYB POTT ECHO COND

This setting specifies a user-selected echo condition and applies if the HYB POTT PERMISSIVE ECHO is set to `Custom`.

HYB POTT WEAK INFEED

If this setting is set to `Enabled`, the scheme activates both the keying and operating paths using a pre-programmed weak infeed logic (see logic diagram below). If this setting is set to `Custom`, the weak infeed condition is to be specified by the user via the ***HYB POTT W/I COND*** setting.

HYB POTT W/I COND

This setting specifies user-selected weak infeed condition and applies if the ***HYB POTT WEAK INFEED*** is set to `Custom`.

HYB POTT RX PICKUP DELAY

This setting enables the relay to cope with spurious received signals. Set the delay longer than the longest spurious TX signal that can be received simultaneously with the zone 2 pickup. The selected delay increases the response time of the scheme.

TRANS BLOCK PICKUP DELAY

This setting defines a transient blocking mechanism embedded in the hybrid POTT scheme for coping with the exposure of both the over-reaching zone 2 and ground directional overcurrent function to current reversal conditions.

The transient blocking logic applies to both operate (trip) and send (transmit) paths. Identifying the fault as a reverse fault prevents the scheme from both operating and keying the channel. If the reverse fault condition prevails for ***TRANS BLOCK PICKUP DELAY,*** the blocking operation is extended by the transient blocking timer for ***TRANS BLOCK RESET DELAY***. This allows riding through current reversal conditions.

However, if distance zone 1 picks up during the transient blocking condition, the blocking action is removed. This is to cope with evolving faults when an external fault is followed by an internal fault. Without the zone 1 feedback, the trip is delayed unnecessarily.

Do not set the ***TRANS BLOCK PICKUP DELAY*** longer than the fastest possible trip time for faults on an adjacent line so that extended blocking action can be established. Take into account the pickup time of the reverse-looking elements of the scheme.

Do not set the delay too short, in order to avoid locking up a spurious reverse fault indication that can occur during internal fault conditions.

TRANS BLOCK RESET DELAY

This setting defines a transient blocking mechanism embedded in the hybrid POTT scheme for coping with the exposure of the overreaching protection functions to current reversal conditions (see also the ***TRANS BLOCK PICKUP DELAY***).

Set this delay long enough to cope with transient conditions including not only current reversals but also spurious negative and zero-sequence currents occurring during breaker operations (in the case when neutral directional overcurrent or negative-sequence directional overcurrent functions are used). Consider the breaker failure time of the surrounding protection systems within the reach of the ground directional function used by the hybrid POTT scheme, to make sure that the ground directional function is not jeopardized during delayed breaker operations.

ECHO DURATION

This setting defines the guaranteed and exact duration of the echo pulse. The duration is not dependent on the duration and shape of received RX signals. This setting enables the relay to avoid a permanent lock-up of the transmit/receive loop.

ECHO LOCKOUT

This setting defines the lockout period for the echo logic after sending the echo pulse. This enables the relay to avoid oscillations of the echo pulses during an autoreclosure dead-time after clearing an internal fault.

HYB POTT SEAL-IN DELAY

The output FlexLogic operand (HYB POTT OP) is produced according to the hybrid POTT scheme logic. The ***HYB POTT SEAL-IN DELAY*** defines a minimum guaranteed duration of the HYB POTT OP pulse. As this operand runs the trip table of the hybrid POTT scheme, the trip operands HYB POTT TRIP A, B, C, and 3P are sealed-in for the same period of time.

GND DIR O/C FWD

This setting defines the FlexLogic operand (if any) of a protection element that is used in addition to zone 2 for identifying faults on the protected line, and thus, for keying the communication channel and initiating operation of the scheme (both through the transient blocking logic). Good directional integrity is the key requirement for an over-reaching forward-looking protection element used as ***GND DIR O/C FWD***.

Even though any FlexLogic operand could be used as GND DIR O/C FWD enabling the user to combine responses of various protection elements or to apply extra conditions through FlexLogic equations, this extra signal is primarily meant to be the output operand from either the negative-sequence directional or neutral directional overcurrent elements. Both these elements have separate forward (FWD) and reverse (REV) output operands. The forward indication should be used (***NEG SEQ DIR OC1 FWD*** or ***NEUTRAL DIR OC1 FWD***).

Coordinate the selected protection element (or elements in combination) with the selection of ***GND DIR O/C REV***. For all the forward external faults seen by an element used as ***GND DIR O/C FWD*** at one end of the line, the reverse-looking element used as ***GND DIR O/C REV*** at the other end picks up and provides a blocking signal. For greater security and to overcome spurious directional element operation during transients, adding at least 0.5 cycles of pickup delay to the forward directional element is recommended.

GND DIR O/C REV

This setting defines the FlexLogic operand (if any) of a protection element used in addition to zone 4 for identifying reverse faults, and thus, for stopping the transmit signal and initiating the transient blocking timer. Good directional integrity is the key requirement for a reverse-looking protection element used as ***GND DIR O/C REV***.

Even though any FlexLogic operand can be used as ***GND DIR O/C REV*** enabling the user to combine responses of various protection elements or to apply extra conditions through FlexLogic equations, this extra signal is primarily meant to be the output operand from either the negative sequence directional or neutral directional overcurrent element. Both these elements have separate forward (FWD) and reverse (REV) output operands. Use the reverse indication (***NEG SEQ DIR OC1 REV*** or ***NEUTRAL DIR OC1 REV***).

Coordinate the selected protection element (or elements in combination) with the selection of ***GND DIR O/C FWD***. For all the forward external faults seen by an element used as ***GND DIR O/C FWD*** at one end of the line, the reverse-looking element used as ***GND DIR O/C REV*** at the other end picks up and provides a blocking signal. For greater security and to overcome spurious directional element operation during transients, adding a pickup delay greater than the pilot channel delay to the reverse directional element is recommended.

HYB POTT NO OF COMM BITS

This setting specifies the number of bits of the communications channel available for the scheme. The transmit codes and trip table of the hybrid POTT scheme are the same as those for the permissive under-reaching transfer trip scheme. See the description of the PUTT scheme for information.

HYB POTT RX1 through HYB POTT RX4

These settings allow the user to select the FlexLogic operands that represent the receive signals for the scheme. Typically, input contacts interfacing with a signaling system are used. In single-bit applications, ***HYB POTT RX1*** must be used. In two-bit applications, ***HYB POTT RX1*** and ***HYB POTT RX2*** must be used. In four-bit applications, ***HYB POTT RX1, HYB POTT RX2, HYB POTT RX3***, and ***HYB POTT RX4*** must be used.

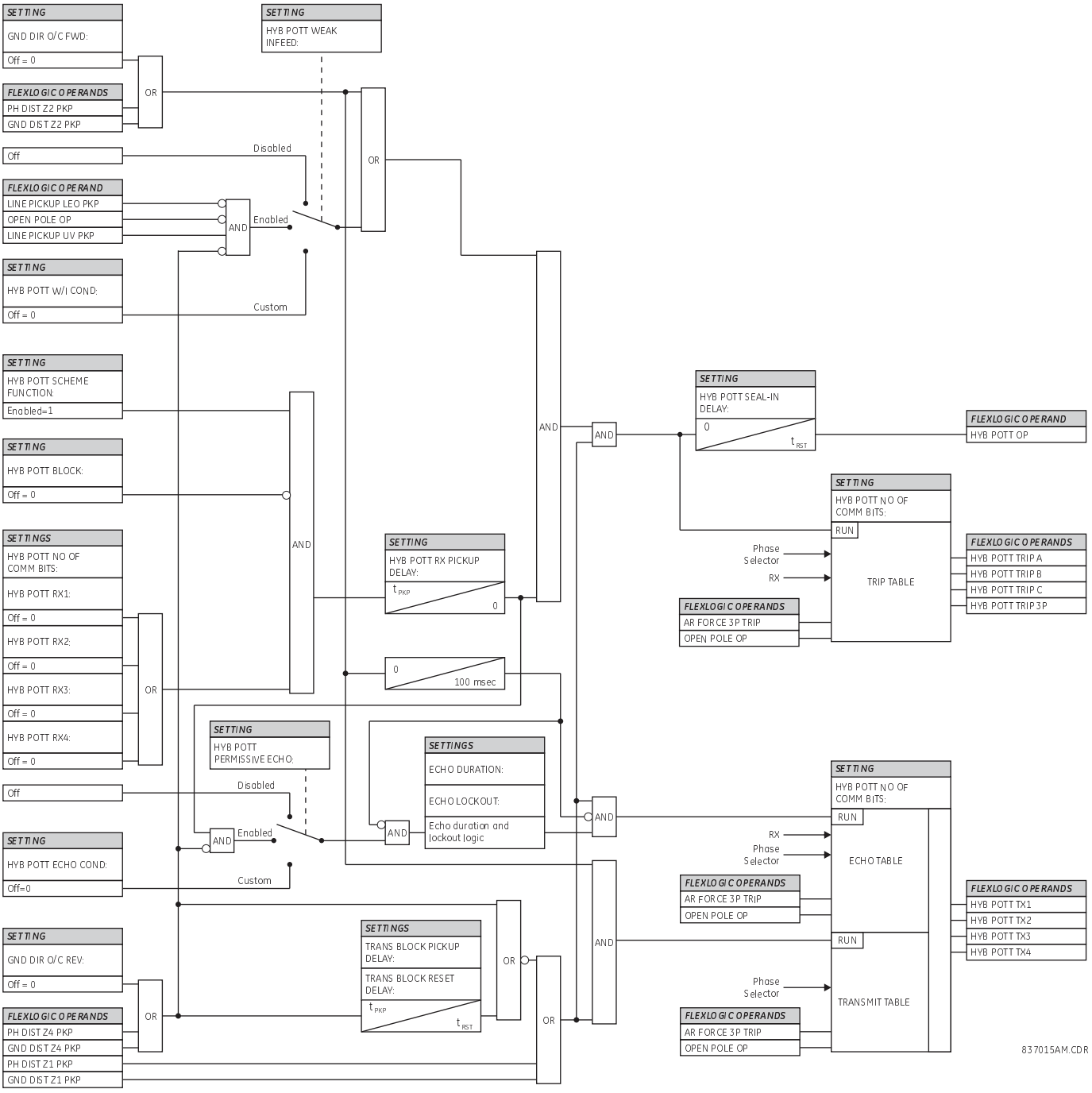

Figure 363: Hybrid POTT scheme logic

9.8.12.6 DIRECTIONAL COMPARISON BLOCKING

Setting path: ***SETTINGS > CONTROL ELEMENTS > PILOT SCHEMES > BLOCKING SCHEME***

■ BLOCKING SCHEME ■	⇔	BLOCKING SCHEME FUNCTION: Disabled	Range: Disabled, Enabled
	⇕	BLOCK SCHEME BLOCK: Off	Range: FlexLogic operand
	⇕	BLOCK RX CO-ORD PKP DELAY: 0.010 s	Range: 0.000 to 65.535 s in steps of 0.001

⇕	TRANS BLOCK PICKUP DELAY: 0.030 s	Range: 0.000 to 65.535 s in steps of 0.001
⇕	TRANS BLOCK RESET DELAY: 0.090 s	Range: 0.000 to 65.535 s in steps of 0.001
⇕	BLOCK SCHEME SEAL-IN DELAY: 0.000 s	Range: 0.000 to 65.535 s in steps of 0.001
⇕	GND DIR O/C FWD: Off	Range: FlexLogic operand
⇕	GND DIR O/C REV: Off	Range: FlexLogic operand
⇕	BLOCK SCHEME NO OF COMM BITS: 1	Range: 1, 2, or 4
⇕	BLOCK SCHEME RX1: Off	Range: FlexLogic operand
⇕	BLOCK SCHEME RX2: Off	Range: FlexLogic operand
⇕	BLOCK SCHEME RX3: Off	Range: FlexLogic operand
⇕	BLOCK SCHEME RX4: Off	Range: FlexLogic operand
⇕	BLOCK SCHEME TARGET: Self-reset	Range: Self-Reset, Latched, Disabled
⇧	BLOCK SCHEME EVENT: Disabled	Range: Disabled, Enabled

Generally, the scheme compares the direction to a fault at all terminals of the line. Unlike the permissive schemes, the absence of a blocking signal permits operation of the scheme. Consequently, the scheme is biased toward dependability and requires an "on/off" type of signaling.

By default, this scheme uses only a forward-looking over-reaching zone 2 distance element to identify forward faults. Ground directional overcurrent functions available in the relay can be used in conjunction with the zone 2 distance element to increase the coverage for high-resistance faults. Also by default, only a reverse-looking zone 4 distance element to identify reverse faults. Ground directional overcurrent functions available in the relay can be used in conjunction with the zone 4 distance element for better time and sensitivity coordination.

For proper operation, the zone 2 and 4 phase and ground distance elements must be enabled, configured, and set per rules of distance relaying. If used by this scheme, the selected ground directional overcurrent functions must be enabled, configured, and programmed accordingly.

In single-pole tripping applications, the scheme uses local fault type identification provided by the phase selector together with information received from the remote terminal.

The scheme generates output operands (DIR BLOCK TX INIT and DIR BLOCK TX1 STOP through DIR BLOCK TX4 STOP) that control the transmission of signals to the remote end(s). When used with telecommunications facilities, assign the output operands to operate output contacts connected to key the transmitter at the interface.

The output operands from the scheme (DIR BLOCK A, B, C, and 3P) must be configured to interface with other relay functions, output contacts in particular, in order to make the scheme fully operational. Typically, you program the output operand to initiate a trip, breaker fail, and autoreclose, and drive a user-programmable LED as per user application.

When used in conjunction with the trip output element, the scheme is pre-configured to initiate trip, breaker fail, and single-pole autoreclose actions.

BLOCK SCHEME BLOCK

This setting allows the user to assign any FlexLogic operand to block the scheme. Contact inputs from a pilot cut-out switch are typically used for this purpose.

BLOCK RX CO-ORD PKP DELAY

This setting defines a delay for the forward-looking protection elements used by the scheme for coordination with the blocking response from the remote end(s). In this setting, include both the response time of the protection elements used to establish a blocking signal and the total transmission time of that signal including the relay communications equipment interfacing and the communications channel itself.

TRANS BLOCK PICKUP DELAY

This setting defines a transient blocking mechanism embedded in the blocking scheme for coping with the exposure of both the over-reaching zone 2 and ground directional overcurrent function to current reversal conditions.

The transient blocking logic applies to the send path only. Identifying the fault as a reverse fault establishes the blocking signal. If the reverse fault condition prevails for ***TRANS BLOCK PICKUP DELAY***, the blocking operation is extended by the transient blocking timer for ***TRANS BLOCK RESET DELAY***. This allows riding through current reversal conditions. However, if zone 1 picks up during the transient blocking condition, the blocking action is removed. This is done to cope with evolving faults when an external fault is followed by an internal fault. Without the zone 1 feedback, the trip is unnecessarily delayed.

Do not set the ***TRANS BLOCK PICKUP DELAY*** longer than the fastest possible trip time for faults on an adjacent line so that the extended blocking action can be established. Take into account the pickup time of the reverse-looking elements of the scheme. Do not set the delay too short, in order to avoid locking up a spurious reverse fault indication that can occur during internal fault conditions.

TRANS BLOCK RESET DELAY

This setting defines a transient blocking mechanism embedded in the blocking scheme for coping with the exposure of the overreaching protection functions to current reversal conditions (see also the ***TRANS BLOCK PICKUP DELAY***).

Set this delay long enough to cope with transient conditions including not only current reversals but also spurious negative and zero-sequence currents occurring during breaker operations (in the case when neutral directional or negative-sequence directional overcurrent functions are used). Consider breaker failure time of the surrounding protection systems within the reach of the ground directional function used by the blocking scheme, to make sure that the ground directional function is not jeopardized during delayed breaker operations.

BLOCK SCHEME SEAL-IN DELAY

The output FlexLogic operand (DIR BLOCK OP) is produced according to the Blocking scheme logic. The ***BLOCK SCHEME SEAL-IN DELAY*** defines a minimum guaranteed duration of the DIR BLOCK OP pulse. As this operand runs the Trip Table of the Blocking scheme, the trip operands DIR BLOCK TRIP A, B, C, and 3P are sealed-in for the same period of time.

GND DIR O/C FWD

This setting defines the FlexLogic operand (if any) of a protection element used in addition to zone 2 for identifying faults on the protected line, and thus, for initiating operation of the scheme. Good directional integrity is the key requirement for an over-reaching forward-looking protection element used as ***GND DIR O/C FWD***.

Even though any FlexLogic operand can be used as ***GND DIR O/C FWD*** enabling the user to combine responses of various protection elements or to apply extra conditions through FlexLogic equations, this extra signal is primarily meant to be the output operand from either the negative-sequence directional or neutral directional overcurrent elements. Both these elements have separate forward (FWD) and reverse (REV) output operands.

The forward indication is used (***NEG SEQ DIR OC1 FWD*** or ***NEUTRAL DIR OC1 FWD***). Coordinate the selected protection element (or elements in combination) with the selection of ***GND DIR O/C REV***. For all the forward external faults seen by an element used as ***GND DIR O/C FWD*** at one end of the line, the reverse-looking element

used as ***GND DIR O/C REV*** at the other end picks up and provides a blocking signal. For greater security and to overcome spurious directional element operation during transients, adding at least 0.5 cycles of pickup delay to the forward directional element is recommended.

GND DIR O/C REV

This setting defines the FlexLogic operand (if any) of a protection element that is used in addition to zone 4 for identifying reverse faults, and thus, for initiating the blocking signal. Either reverse-looking directional or non-directional overcurrent protection element can be used as ***GND DIR O/C REV***.

Even though any FlexLogic operand can be used as GND DIR O/C REV, enabling the user to combine responses of various protection elements or to apply extra conditions through FlexLogic equations, this extra signal is primarily meant to be the output operand from either the negative-sequence directional, neutral directional, or a non-directional instantaneous overcurrent element.

Consider the selected protection element (or elements in combination) with the selection of ***GND DIR O/C FWD***. For all the forward external faults seen by an element used as GND DIR O/C FWD at one end of the line, the reverse-looking element used as ***GND DIR O/C REV*** at the other end should picks up and provides a blocking signal. For greater security and to overcome spurious directional element operation during transients, adding a pickup delay greater than the pilot channel delay to the reverse directional element is recommended.

BLOCK SCHEME NO OF COMM BITS

This setting specifies the number of bits of the communications channel available for the scheme. With only one bit available, the scheme sends the blocking signal by asserting the DIR BLOCK TX INIT FlexLogic operand. Use this operand to start the channel (set the blocking signal). On internal faults, the scheme removes the blocking signal by asserting the DIR BLOCK TX1 FlexLogic operand.

For tripping the scheme responds to lack of the blocking signal on bit 1 (***BLOCK SCHEME RX1*** setting). The scheme uses only local fault type identification provided by the phase selector to assert the output operands DIR BLOCK TRIP A, B, C, and 3P.

To take advantage of the four-bit blocking scheme, initiate the blocking signals from a disturbance detector. This can be accomplished by using both 50DD and DIR BLOCK TX INIT to assert the blocking signal. Subsequently, specific bits are de-asserted by the scheme based on the phase selection providing the peer relay with more information on the fault type. Otherwise, the peer relay issues a three-pole trip upon receiving the bit pattern (0, 0, 0, 0).

BLOCK SCHEME RX1 through BLOCK SCHEME RX4

These settings allow the user to select the FlexLogic operands that represent the receive signals for the scheme. Typically input contacts interfacing with a signaling system are used. In single-bit applications, ***BLOCK SCHEME RX1*** must be used. In two-bit applications, ***BLOCK SCHEME RX1*** and ***BLOCK SCHEME RX2*** must be used. In four-bit applications, ***BLOCK SCHEME RX1, BLOCK SCHEME RX2, BLOCK SCHEME RX3***, and ***BLOCK SCHEME RX4*** must be used.

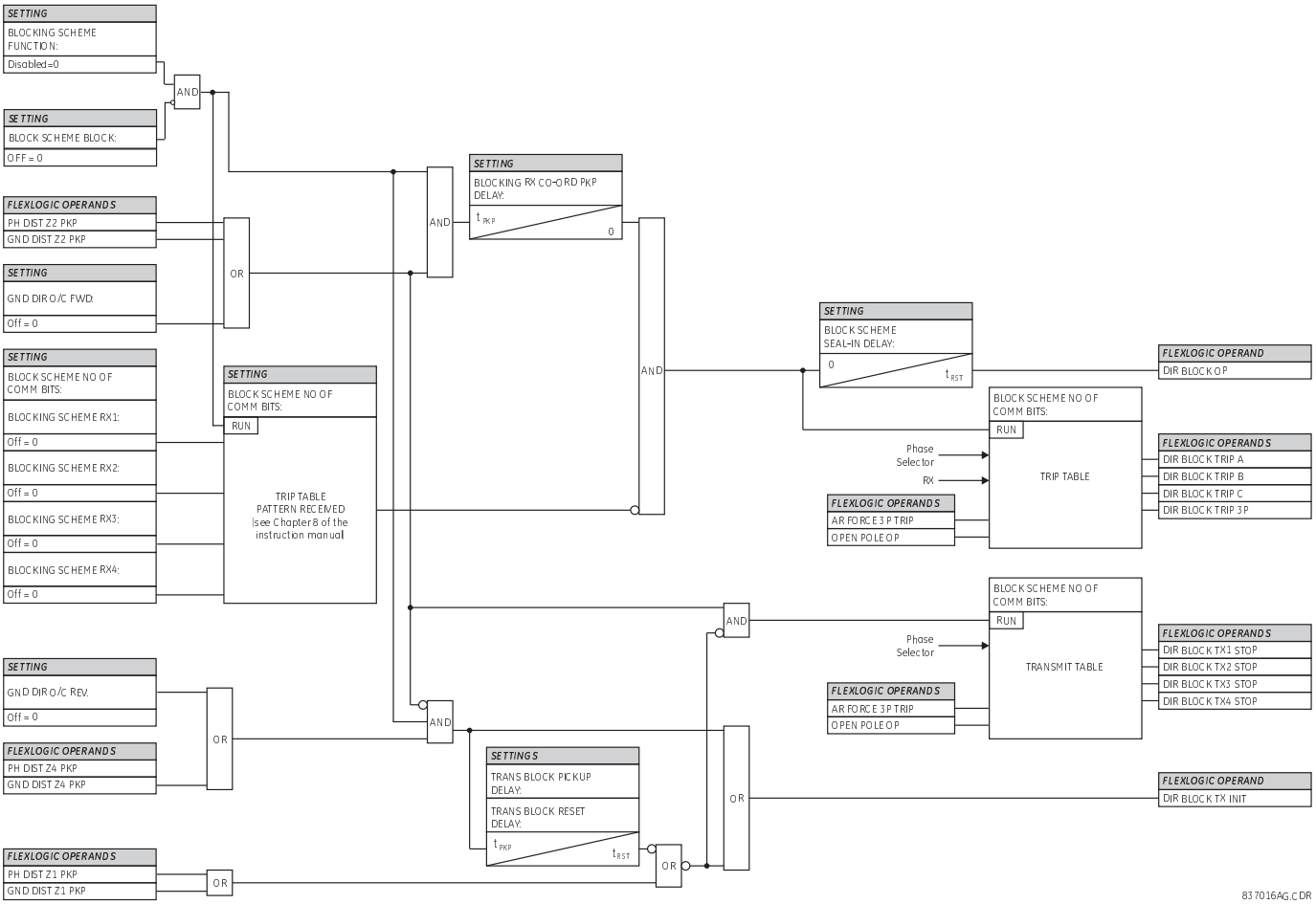

Figure 364: Directional blocking scheme logic

9.8.12.7 DIRECTIONAL COMPARISON BLOCKING 1

Setting path: ***SETTINGS > CONTROL ELEMENTS > PILOT SCHEMES > BLOCKING 1 SCHEME***

■ BLOCKING 1 SCHEME ■	⇔	BLOCKING 1 SCHEME FUNCTION: Disabled	Range: Disabled, Enabled
	⇕	BLOCK 1 SCHEME BLOCK: Off	Range: FlexLogic operand
	⇕	BLOCK 1 RX CO-ORD PKP DELAY: 0.010 s	Range: 0.000 to 65.535 s in steps of 0.001
	⇕	TRANS BLOCK 1 PICKUP DELAY: 0.030 s	Range: 0.000 to 65.535 s in steps of 0.001
	⇕	TRANS BLOCK 1 RESET DELAY: 0.090 s	Range: 0.000 to 65.535 s in steps of 0.001
	⇕	BLOCK 1 SCHEME SEAL-IN DELAY: 0.000 s	Range: 0.000 to 65.535 s in steps of 0.001
	⇕	BLK1 SCHME DIR FWD<n>: Off	Range: FlexLogic operand n = 1 to 3
	⇕	BLK1 SCHME DIR REV<n>: Off	Range: FlexLogic operand n = 1 to 3
	⇕	BLK1 FORCE TX STOP<n>: Off	Range: FlexLogic operand n = 1 to 2

⇕	BLOCK 1 SCHEME NO OF COMM BITS: 1	Range: 1, 2, or 4
⇕	BLOCK 1 SCHEME RX1: Off	Range: FlexLogic operand
⇕	BLOCK 1 SCHEME RX2: Off	Range: FlexLogic operand
⇕	BLOCK 1 SCHEME RX3: Off	Range: FlexLogic operand
⇕	BLOCK 1 SCHEME RX4: Off	Range: FlexLogic operand
⇕	BLOCK 1 SCHEME TARGET: Self-reset	Range: Self-Reset, Latched, Disabled
⇧	BLOCK 1 SCHEME EVENT: Disabled	Range: Disabled, Enabled

The Directional Comparison Blocking1 (DCB1) scheme operates the same way as the Directional Comparison Blocking (DCB) scheme, except hard-coded connections to phase and ground distance elements are removed to allow the user to choose FlexLogic operands to identify forward or reverse direction fault, such as ground OC directional elements for example. This gives the user more flexibility and better coordination when employing this scheme.

Settings description and application guidance for DCB scheme apply to DCB1 scheme with the following exceptions.

BLK1 SCHME DIR FWD1-3

Each setting defines the FlexLogic operand of a protection element for identifying forward faults on the protected line, and thus, for initiating operation of the scheme. Good directional integrity is the key requirement for an over-reaching forward-looking protection element.

Even though any FlexLogic operand can be used as ***BLK1 SCHME DIR FWD*** enabling the user to combine responses of various protection elements or to apply extra conditions through FlexLogic equations, ***BLK1 SCHME DIR FWD*** entries are primarily meant to be the output operand from the Negative-Sequence Directional FWD IOC, Neutral Directional FWD IOC, and the forward-looking distance over-reaching elements.

BLK1 SCHME DIR REV1-3

This setting defines the FlexLogic operand of a protection element that is used for identifying reverse faults, and thus, for initiating the blocking signal. Reverse-looking directional overcurrent protection elements or reverse-looking distance elements can be used as ***BLK1 SCHME DIR REV***.

Even though any FlexLogic operand can be used as ***BLK1 SCHME DIR REV*** enabling the user to combine responses of various protection elements or to apply extra conditions through FlexLogic equations, ***BLK1 SCHME DIR REV*** entries are primarily meant to be the output operand from the Negative-Sequence Directional REV IOC, Neutral Directional REV IOC, non-directional IOC, or reverse-looking distance elements.

Coordinate the selected protection element (or elements in combination) with the selection of DIR FWD. For all the forward external faults seen by an element used as ***BLK1 SCHME DIR FWD*** at one end of the line, the reverse-looking element used as ***BLK1 SCHME DIR REV*** at the other end picks up and provides a blocking signal.

BLK1 FORCE TX STOP1-2

This setting defines the FlexLogic operand of a protection element that is used for identifying internal faults on the protected line, and thus, for stopping the blocking signal. Typically forward-looking under-reach distance elements are used as ***BLK1 FORCE TX STOP***.

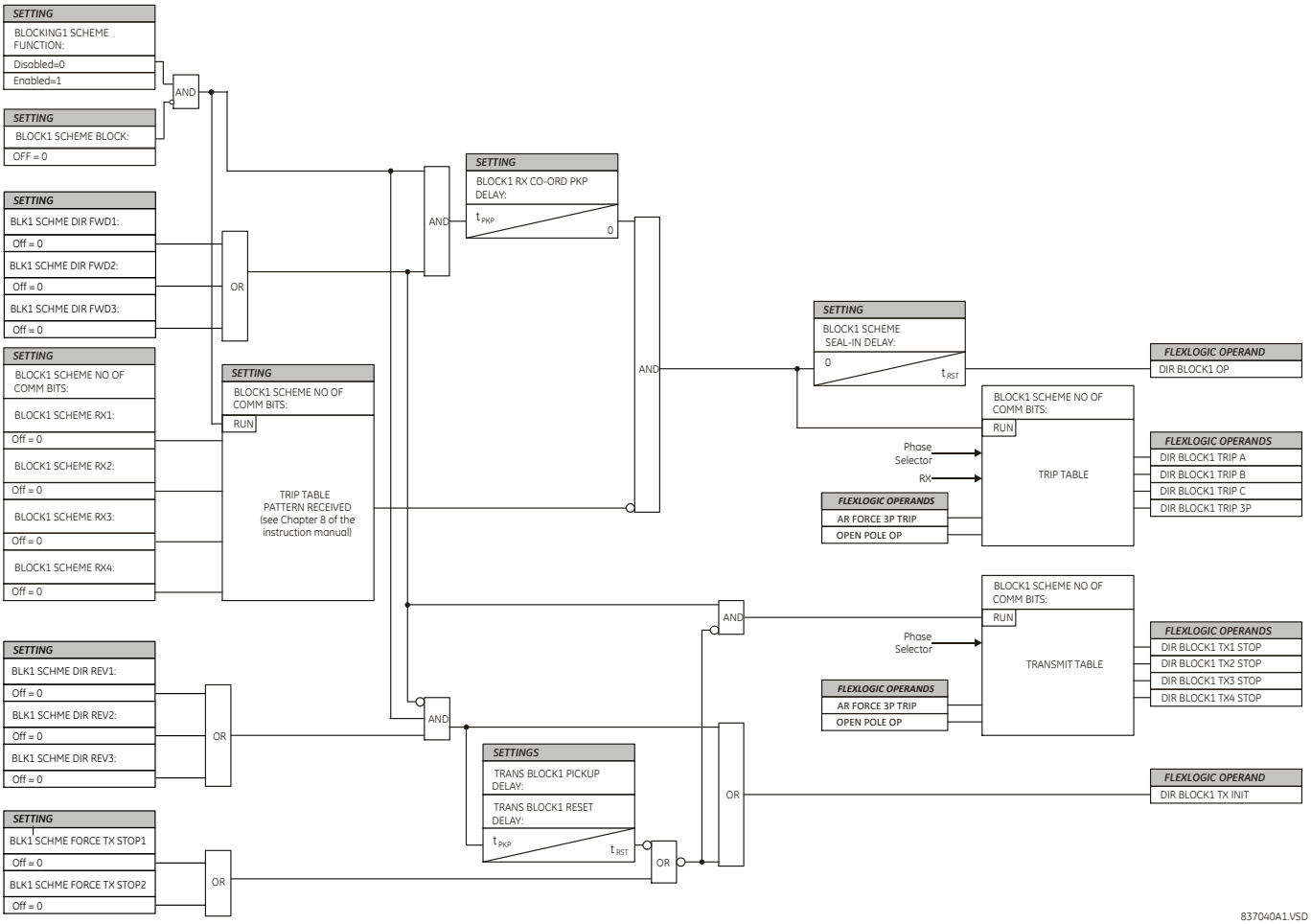

Figure 365: Directional comparison blocking 1 scheme logic

9.8.12.8 DIRECTIONAL COMPARISON UNBLOCKING

Setting path: ***SETTINGS > CONTROL ELEMENTS > PILOT SCHEMES > DCUB SCHEME***

■ DCUB SCHEME ■	⇔	DCUB SCHEME FUNCTION: Disabled — Range: Disabled, Enabled
	⇕	DCUB BLOCK: Off — Range: FlexLogic operand
	⇕	DCUB PERMISSIVE ECHO: Disabled — Range: Disabled, Enabled, Custom
	⇕	DCUB ECHO COND: Off — Range: FlexLogic operand
	⇕	GND DIR O/C FWD: Off — Range: FlexLogic operand
	⇕	GND DIR O/C REV: Off — Range: FlexLogic operand
	⇕	TRANS BLOCK PICKUP DELAY: 0.020 s — Range: 0 to 65.535 s in steps of 0.001
	⇕	TRANS BLOCK RESET DELAY: 0.090 s — Range: 0 to 65.535 s in steps of 0.001

⇕	ECHO DURATION: 0.100 s	Range: 0 to 65.535 s in steps of 0.001
⇕	ECHO LOCKOUT: 0.250 s	Range: 0 to 65.535 s in steps of 0.001
⇕	LINE END OPEN PICKUP DELAY: 0.050 s	Range: 0 to 65.535 s in steps of 0.001
⇕	DCUB LOG PICKUP DELAY: 0.008 s	Range: 0 to 65.535 s in steps of 0.001
⇕	GUARD HEALTHY RESET DELAY: 0.015 s	Range: 0 to 65.535 s in steps of 0.001
⇕	DCUB LOG TRIP WINDOW: 0.150 s	Range: 0 to 65.535 s in steps of 0.001
⇕	DCUB SEAL-IN DELAY: 0.010 s	Range: 0 to 65.535 s in steps of 0.001
⇕	DCUB NO OF COMM BITS: 1	Range: 1, 2, or 4
⇕	DCUB RX1: Off	Range: FlexLogic operand
⇕	DCUB LOG1: Off	Range: FlexLogic operand
⇕	DCUB RX2: Off	Range: FlexLogic operand
⇕	DCUB RX2: Off	Range: FlexLogic operand
⇕	DCUB RX3: Off	Range: FlexLogic operand
⇕	DCUB RX3: Off	Range: FlexLogic operand
⇕	DCUB RX4: Off	Range: FlexLogic operand
⇕	DCUB RX4: Off	Range: FlexLogic operand
⇕	DCUB SCHEME TARGET: Self-reset	Range: Self-Reset, Latched, Disabled
⇧	DCUB SCHEME EVENT: Disabled	Range: Disabled, Enabled

This menu allows selecting and setting up protection signaling of the directional comparison unblocking scheme. This scheme is available for single-pole tripping applications and can be used with one, two, or four bit communications channels. Choices of communications channel include remote inputs/outputs and telecommunications interfaces.

Generally, this scheme uses an over-reaching zone 2 distance element to compare the direction to a fault at all terminals of the line. Ground directional overcurrent functions available in the relay can be used in conjunction with the zone 2 distance element to key the scheme and initiate its operation. This increases the coverage for high-resistance faults.

The scheme is for two or three-terminal applications. As a long reach of the overreaching distance element can be required for three-terminal applications, transient blocking logic is provided for both distance and ground directional overcurrent elements. An echo feature is made available to cope with line open conditions.

By default, the scheme uses the reverse-looking zone 4 distance element to identify reverse faults. Additionally, reverse-looking ground directional overcurrent functions can be used in conjunction with the zone 4.

For proper operation of the scheme, the zone 2 and 4 phase and ground distance elements must be enabled, configured, and set per rules of distance relaying. Enable the line pickup element, configure it, and set it to detect line-end-open conditions. If used by this scheme, the selected ground directional overcurrent function(s) must be enabled, configured, and set accordingly.

In single-pole tripping applications, the scheme uses local fault type identification provided by the phase selector together with information received from the remote terminal. The scheme generates output operands (DCUB TX1 through DCUB TX4) that are used to transmit the signal to the remote terminal(s). The directional comparison unblocking scheme was developed for use with frequency shift keying communications channels, though different telecommunications interfaces can be used (for example, digital communication channels utilizing the Product teleprotection input/outputs).

To make the scheme fully operational as a stand-alone feature, the scheme output operands must be configured to interface with other relay functions, output contacts in particular. Typically, you program the output operands to initiate a trip, breaker fail, and autoreclose, and drive a user-programmable LED as per the intended application.

When used in conjunction with the trip output element, the scheme is pre-configured to initiate trip, breaker fail, and autoreclose actions.

DCUB BLOCK

This setting allows the user to assign any FlexLogic operand to block the scheme. Contact inputs from a pilot cut-out switch are typically used for this purpose.

DCUB PERMISSIVE ECHO

Enabling this setting sends a permissive echo signal to the remote end(s) under certain conditions (see the logic diagram for details). If set to `Custom`, the echo signal is sent if a condition selected with the ***DCUB ECHO COND*** setting is satisfied. The echo is sent only once and then the echo logic locks out for the time specified by the ***ECHO LOCKOUT*** setting. The duration of the echo pulse is programmable by the ***ECHO DURATION*** setting. The echo is returned only if no overreaching and reverse protection elements operate.

DCUB ECHO COND

This setting specifies a user-selected echo condition and applies if the ***DCUB PERMISSIVE ECHO*** setting is `Custom`.

GND DIR O/C FWD

This setting defines the FlexLogic operand (if any) of a protection element used in addition to zone 2 for identifying faults on the protected line, and thus, for keying the communication channel(s) and initiating operation of the scheme (both through the transient blocking logic).

Good directional integrity is the key requirement for an over-reaching forward-looking protection element set as ***GND DIR O/C FWD***. Even though any FlexLogic operand can be set as ***GND DIR O/C FWD***, thereby enabling the user to combine responses of various protection elements or to apply extra conditions through FlexLogic equations, this extra signal is primarily meant to be the output operand from either the negative-sequence directional or neutral directional overcurrent elements. As both these elements have separate forward and reverse output operands, use the forward indication (that is, NEG SEQ DIR OC1 FWD or NEUTRAL DIR OC1 FWD).

Coordinate the selected protection element (or elements in combination) with the selection of ***GND DIR O/C REV***. For all forward external faults seen by an element set as ***GND DIR O/C FWD*** at one end of the line, the reverse-looking element set as ***GND DIR O/C REV*** at the other end picks up and provides a blocking signal. For greater security and to overcome spurious directional element operation during transients, adding at least 0.5 cycles of pickup delay to the forward directional element is recommended.

GND DIR O/C REV

This setting defines the FlexLogic operand (if any) of a protection element used in addition to zone 4 for identifying reverse faults, and thus, for stopping the transmit signal and initiating the transient blocking timer.

Good directional integrity is the key requirement for a reverse-looking protection element set as ***GND DIR O/C REV***. Even though any FlexLogic operand can be set as ***GND DIR O/C REV***, thereby enabling the user to combine responses of various protection elements or to apply extra conditions through FlexLogic equations, this extra signal is primarily meant to be the output operand from either the negative-sequence directional or neutral directional overcurrent element. As both these elements have separate forward and reverse output operands, use the reverse indication (that is, NEG SEQ DIR OC1 REV or NEUTRAL DIR OC1 REV).

Coordinate the selected protection element (or elements in combination) with the selection of ***GND DIR O/C FWD***. For all the forward external faults seen by an element set as ***GND DIR O/C FWD*** at one end of the line, the reverse-looking element set as ***GND DIR O/C REV*** at the other end picks up and provides a blocking signal. For greater security and to overcome spurious directional element operation during transients, adding a pickup delay greater than the pilot channel delay to the reverse directional element is recommended.

TRANS BLOCK PICKUP DELAY

This setting defines a transient blocking mechanism embedded in the directional comparison unblocking scheme for coping with the exposure of both the over-reaching zone 2 and ground directional overcurrent function to current reversal conditions.

The transient blocking logic applies to both operate (trip) and send (transmit) paths. Identifying the fault as a reverse fault prevents the scheme from both operating and keying the channel. If the reverse fault condition prevails for ***TRANS BLOCK PICKUP DELAY*** value, the blocking operation is extended by the transient blocking timer for the ***TRANS BLOCK RESET DELAY*** value. This allows riding through current reversal conditions.

However, if distance zone 1 picks up during the transient blocking condition, the blocking action is removed. This is to cope with evolving faults when an external fault is followed by an internal fault. Without the zone 1 feedback, the trip is delayed unnecessarily.

Do not set the ***TRANS BLOCK PICKUP DELAY*** longer than the fastest possible trip time for faults on an adjacent line so that extended blocking action can be established. Take into account the pickup time of the reverse-looking elements of the scheme. To avoid locking up a spurious reverse fault indication that can occur during internal fault conditions, do not set the delay defined by this setting too short.

TRANS BLOCK RESET DELAY

This setting defines a transient blocking mechanism embedded in the directional comparison unblocking scheme for coping with the exposure of the overreaching protection functions to current reversal conditions (see also the previous ***TRANS BLOCK PICKUP DELAY*** setting).

Set this delay long enough to cope with transient conditions including not only current reversals but also spurious negative and zero-sequence currents occurring during breaker operations (in the case when neutral directional or negative-sequence directional overcurrent functions are used). Consider the breaker failure time of the surrounding protection systems within the reach of the ground directional function used by the directional comparison unblocking scheme, to make sure that the ground directional function is not jeopardized during delayed breaker operations.

ECHO DURATION

This setting defines the guaranteed and exact duration of the echo pulse. The duration does not depend on the duration and shape of the received RX signals. This setting enables the relay to avoid a permanent lock-up of the transmit/receive loop.

ECHO LOCKOUT

This setting defines the lockout period for the echo logic after sending the echo pulse. This setting enables the relay to avoid oscillations of the echo pulses during an autoreclosure dead-time after clearing an internal fault.

LINE END OPEN PICKUP DELAY

This setting defines the pickup value for validation of the line end open conditions as detected by the line pickup logic via the LINE PICKUP LEO PKP FlexLogic operand. The validated line end open condition is a requirement for the directional comparison unblocking scheme to return a received echo signal (if the echo feature is enabled).

When selecting this delay value, take into account the principle of operation and settings of the line pickup element, which should thus be enabled.

DCUB LOG PICKUP DELAY

This setting represents the directional comparison unblocking duration time delay. It is the amount of time that the loss-of-guard without receipt of permissive trip must be present before the logic provides permission to operate if a forward fault is detected. It is set relatively short, but long enough to ride through the transition period of loss-of-guard with the receipt of a permissive signal that occurs with a normal trip. Typical setting values are from 4 to 32 ms. For most cases, a value of 8 ms can be used.

The tripping or unblocking window for loss-of-guard without permission is the difference between the ***DCUB LOG TRIP WINDOW*** and ***DCUB LOG PICKUP DELAY*** timers. For the default settings, this difference is 150 – 8 = 142 ms and occurs 8 ms after loss-of-guard was received, when the ***DCUB LOG PICKUP DELAY*** timer has timed out. During this interval, the scheme has permission to operate if a forward fault is sensed, and no reverse faults or transient blocking.

GUARD HEALTHY RESET DELAY

This setting represents the guard healthy security time delay. It is the time after the channel is restored that the guard signal must be present before the directional comparison unblocking scheme is put back in service. This reset timer allows the scheme to ride through any chattering in the channel. Typical values are from 100 to 500 ms, with a value of 150 ms commonly used.

DCUB LOG TRIP WINDOW

This setting represents the directional comparison unblocking lockout time delay. It is the amount of time from when any loss-of-guard signal is received until the directional comparison unblocking scheme is locked out without the presence of any RX1 to RX4 receive signal or any forward element. This timer seals-in when it expires, creating a blocking signal for all scheme functions and disabling the scheme until the guard signal is restored and the ***GUARD HEALTHY RESET DELAY*** timer expires. Typical values for this setting are from 160 to 180 ms; for most cases, a setting of about 150 ms can be used.

DCUB SEAL-IN DELAY

The output FlexLogic operand (DCUB OP) is produced according to the directional comparison unblocking scheme logic. The ***DCUB SEAL-IN DELAY*** defines a minimum guaranteed duration of the DCUB OP pulse. As this operand runs the trip table of the directional comparison unblocking scheme, the DCUB TRIP A, DCUB TRIP B, DCUB TRIP C, and DCUB TRIP 3P trip operands are sealed-in for the same period of time.

DCUB NO OF COMM BITS

This setting specifies the number of bits available on the communications channel for the scheme. With only one bit available, the scheme sends the direct under-reaching transfer trip command on bit 1 (DCUB TX1 operand) and responds to the direct trip command received on bit 1 (***DCUB RX1*** setting). The scheme uses only local fault type identification provided by the phase selector to assert the DCUB TRIP A, DCUB TRIP B, DCUB TRIP C, and DCUB TRIP 3P output operands.

DCUB RX1 through DCUB RX4

These settings allow the user to select the FlexLogic operands to represent the permission receive signals for the scheme. Contact inputs interfacing with a signaling system(s) are typically used. These settings must be used in conjunction with the loss-of-guard signals, otherwise the scheme does not unblock and thus fails to operate.

In single-bit applications, ***DCUB RX1*** must be used. In two-bit applications, ***DCUB RX1*** and ***DCUB RX2*** must be used. In four-bit applications, ***DCUB RX1***, ***DCUB RX2***, ***DCUB RX3***, and ***DCUB RX4*** must be used.

DCUB LOG1 through DCUB LOG4

These settings allow the user to select the FlexLogic operands to represent the loss-of-guard receive signals for the scheme. Contact inputs interfacing with a signaling system(s) are typically used. Each loss-of-guard signal must correspond to the same receive signal from the same communications channel (that is, RX1 and LOG1 must be from the same communications channel, and the same for channels 2, 3 and 4, if used).

In single-bit applications, ***DCUB RX1*** and ***DCUB LOG1*** must be used. In two-bit applications, ***DCUB RX1*** with ***DCUB LOG1*** and ***DCUB RX2*** with ***DCUB LOG2*** must be used. In four-bit applications, all receive and loss-of-guard signals must be used.

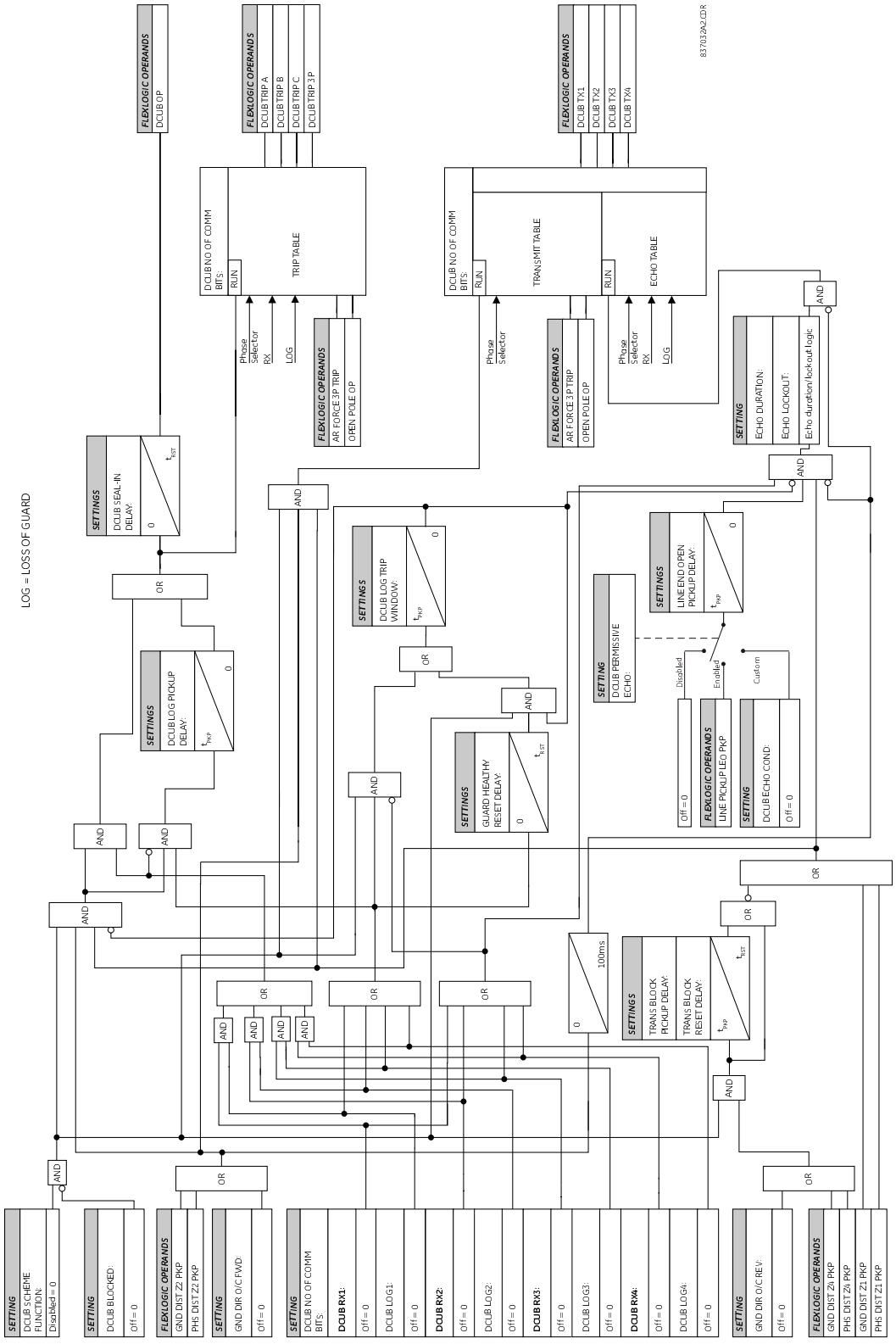

Figure 366: Directional comparison unblocking scheme logic

9.9 MONITORING ELEMENTS

9.9.1 MONITORING ELEMENTS MENU

Setting path: ***SETTINGS > CONTROL ELEMENTS > MONITORING ELEMENTS***

■ MONITORING ■ ELEMENTS	⇔	■ BREAKER <n> ■ ARCING CURRENT	n = 1 to 2
	ô	■ BREAKER ■ FLASHOVER <n>	n = 1 to 2
	⇕	■ BREAKER RESTRIKE <n> ■	n = 1 to 2
	⇕	■ CT FAILURE ■ DETECTOR <n>	n = 1 to 4
	⇕	■ VT FUSE FAILURE <n> ■	n = 1 to 4
	⇕	■ OPEN POLE ■	
	⇕	■ THERMAL OVERLOAD ■ PROTECTION	
	⇕	■ BROKEN CONDUCTOR ■	
	⇑	■ HARMONIC ■ DETECTION	

9.9.2 BREAKER ARCING CURRENT

Setting path: ***SETTINGS > CONTROL ELEMENTS > MONITORING ELEMENTS > BREAKER <n> ARCING CURRENT***

> *Note:*
> *Only Breaker 1 arcing current is shown*

■ BREAKER 1 ■ ARCING CURRENT	⇔	BKR 1 ARC AMP FUNCTION: Disabled	Range: Disabled, Enabled
	⇕	BKR 1 ARC AMP SOURCE: SRC 1	Range: SRC <n>
	⇕	BKR 1 ARC AMP INT-A: Off	Range: FlexLogic operand
	⇕	BKR 1 ARC AMP INT-B: Off	Range: FlexLogic operand
	⇕	BKR 1 ARC AMP INT-C: Off	Range: FlexLogic operand
	⇕	BKR 1 ARC AMP DELAY: 0.000 s	Range: 0.000 to 65.535 s in steps of 0.001
	⇕	BKR 1 ARC AMP LIMIT: 1000 kA2-cyc	Range: 0 to 50000 kA^2-cycle in steps of 1

⇕	BKR 1 INTERRUPTION RATING: 31.5 kA	Range: 0.0 to 100.0 kA in steps of 0.1
⇕	BKR 1 CLR ARC AMPS: Off	Range: FlexLogic operand
⇕	BKR 1 ARC AMP BLOCK: Off	Range: FlexLogic operand
⇕	BKR 1 ARC AMP TARGET: Self-reset	Range: Self-reset, Latched, Disabled
⇧	BKR 1 ARC AMP EVENTS: Disabled	Range: Disabled, Enabled

Note:
There are no breaker arcing current elements with 9-2LE hardware and software options

There is one breaker arcing current element available per CT bank, with a minimum of two elements.

This element calculates an estimate of the per-phase wear on the breaker contacts by measuring and integrating the current squared passing through the breaker contacts as an arc. These per-phase values are added to accumulated totals for each phase and compared to a programmed threshold value. When the threshold is exceeded in any phase, the relay can set an output operand to “1.” The accumulated value for each phase can be displayed as an actual value.

The operation of the scheme is shown in the following logic diagram. The same output operand that is selected to operate the output relay used to trip the breaker, indicating a tripping sequence has begun, is used to initiate this feature. A time delay is introduced between initiation and the starting of integration to prevent integration of current flow through the breaker before the contacts have parted. This interval includes the operating time of the output relay, any other auxiliary relays, and the breaker mechanism. For maximum measurement accuracy, measure the interval between change-of-state of the operand (from 0 to 1) and contact separation for the specific installation. Integration of the measured current continues for 100 ms, which is expected to include the total arcing period.

The feature is programmed to perform fault duration calculations. Fault duration is defined as a time between operation of the disturbance detector occurring before initiation of this feature, and reset of an internal low-set overcurrent function. Correction is implemented to account for a non-zero reset time of the overcurrent function.

Breaker arcing currents and fault duration values are available under the ***ACTUAL VALUES > RECORDS > MAINTENANCE < BREAKER <n>*** menus.

BKR 1 ARC AMP INT-A(C)

Select the same output operands that are configured to operate the output relays used to trip the breaker. In three-pole tripping applications, configure the same operand to initiate arcing current calculations for poles A, B, and C of the breaker. In single-pole tripping applications, configure per-pole tripping operands to initiate the calculations for the poles that are actually tripped.

BKR 1 ARC AMP DELAY

This setting is used to program the delay interval between the time the tripping sequence is initiated and the time the breaker contacts are expected to part, starting the integration of the measured current.

BKR 1 ARC AMP LIMIT

Selects the threshold value above which the output operand is set.

BKR 1 CLR ARC AMPS

Selects a FlexLogic Operand to clear the accumulated I2t values (kA2-cycle), reset fault duration items (breaker operating time), clear ARCING AMPS (kA2-cycle) and AMP MAX (kA) values of the last event.

BKR 1 INTERUPTION RATING

This setting specifies the maximum symmetrical interruption rating of the circuit breaker.

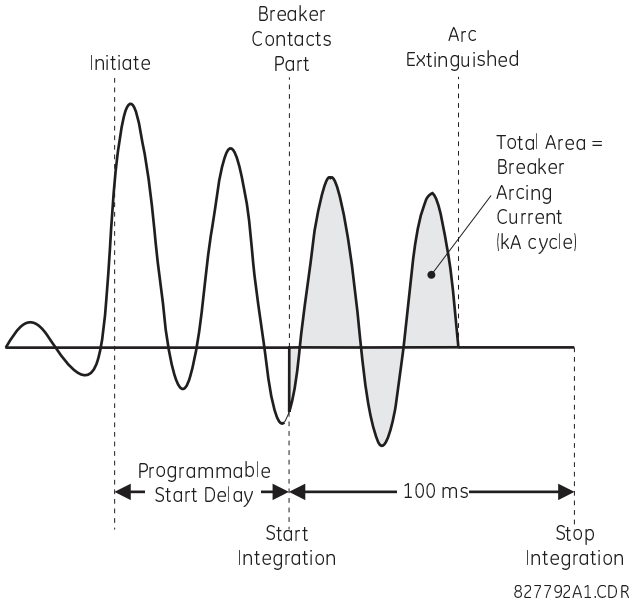

Figure 367: Arcing current measurement

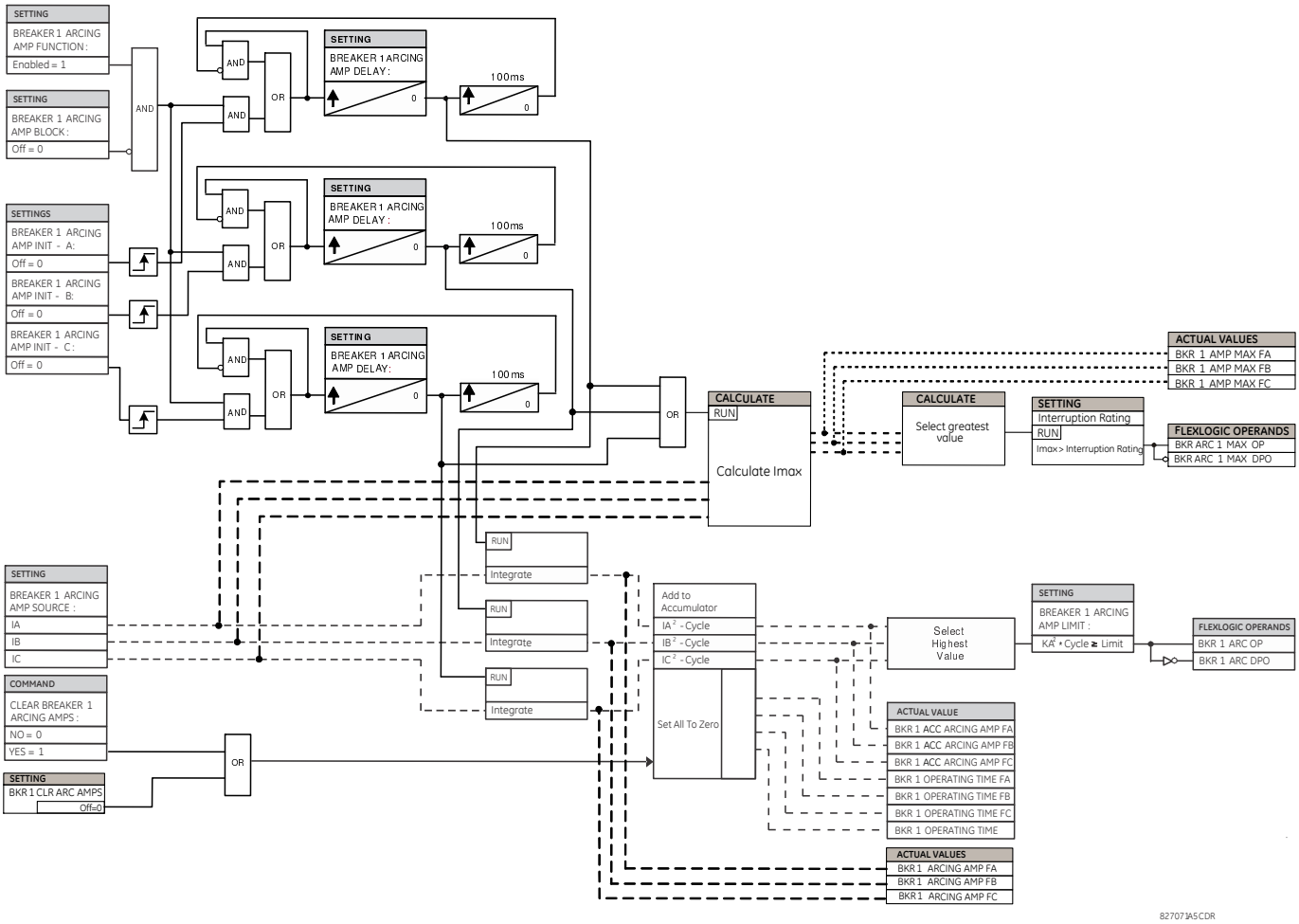

Figure 368: Breaker arcing current logic

9.9.3 BREAKER FLASHOVER

Setting path: ***SETTINGS > CONTROL ELEMENTS > MONITORING ELEMENTS > BREAKER FLASHOVER <n>***

> *Note:*
> *Only Breaker Flashover 1 is shown*

■ BREAKER ■ FLASHOVER 1	⇔	BRK 1 FLSHOVR FUNCTION: Disabled	Range: Disabled, Enabled
	⇕	BRK 1 FLSHOVR SIDE 1 SOURCE: SRC 1	Range: SRC <n>
	⇕	BRK 1 FLSHOVR SIDE 1 SOURCE: None	Range: None, SRC <n>
	⇕	BRK 1 STATUS CLSD A: Off	Range: FlexLogic operand
	⇕	BRK 1 STATUS CLSD B: Off	Range: FlexLogic operand
	⇕	BRK 1 STATUS CLSD C: Off	Range: FlexLogic operand

⇕	BRK 1 FLSHOVR V PKP: 0.850 pu	Range: 0.004 to 1.500 pu in steps of 0.001
⇕	BRK 1 FLSHOVR DIFF V PKP: 1000 V	Range: 0 to 100000 V in steps of 1
⇕	BRK 1 FLSHOVR AMP PKP: 0.600 pu	Range: 0.020 to 1.500 pu in steps of 0.001
⇕	BRK 1 FLSHOVR PKP DELAY: 0.100 s	Range: 0.000 to 65.535 s in steps of 0.001
⇕	BRK 1 FLSHOVR SPV A: Off	Range: FlexLogic operand
⇕	BRK 1 FLSHOVR SPV B: Off	Range: FlexLogic operand
⇕	BRK 1 FLSHOVR SPV C: Off	Range: FlexLogic operand
⇕	BRK 1 FLSHOVR BLOCK: Off	Range: FlexLogic operand
⇕	BRK 1 FLSHOVR TARGET: Self-reset	Range: Self-reset, Latched, Disabled
⇧	BRK 1 FLSHOVR EVENTS: Disabled	Range: Disabled, Enabled

Note:
There are no breaker flashover elements with 9-2LE hardware and software options

The detection of the breaker flashover is based on the following conditions:

- Breaker open,
- When phase voltage measured from either side of the breaker is greater than the setting,
- Measured current through the breaker is greater than the pickup setting, and
- Voltage difference across the breaker drops below the pickup setting (only applicable to six VTs application)

Furthermore, the scheme is applicable for cases where one or two sets of three-phase voltages are available across the breaker, as follows:

- One set of three-phase voltages is available across the breaker (three VTs application)
- Two sets of three-phase voltages are available across the breaker (six VTs application)

Three VT breaker flashover application

When only one set of VTs is available across the breaker, set the ***BRK 1 FLSHOVR SIDE 2 SRC*** setting to `None`.

Note:
Voltages must be present prior to flashover conditions. If the three VTs are placed after the breaker on the line (or feeder), and the downstream breaker is open, the measured voltage is zero and the flashover element is not initiated.

The flashover detection resets if the current drops below ***BRK 1 FLSHOVR AMP PKP***, the breaker closes, or the FlexLogic operand selected by ***BRK 1 FLSHOVR SPV A*** changes to high. It is recommended to use the supervision ***BRK 1 FLSHOVR SPV A*** setting, and select a trip operand that does not allow the flashover element to pick up prior to the trip.

The flashover detection can be used for external alarm, re-tripping the breaker, or energizing the lockout relay.

Consider the following configuration:

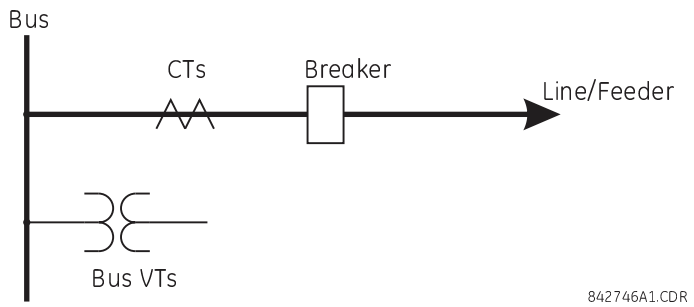

Figure 369: Breaker configuration (3-VT)

The source 1 (SRC1) phase currents are feeder CTs and phase voltages are bus VTs, and Contact Input 1 is set as Breaker 52a contact. The conditions prior to flashover detection are:

- 52a status = 0
- VAg is greater than the ***BRK 1 FLSHOVR V PKP*** setting
- IA is below ***BRK 1 FLSHOVR AMP PKP*** (ideally, IA = 0)

The conditions at flashover detection are:

- 52a status = 0
- VAg is greater or lesser than the ***BRK 1 FLSHOVR V PKP*** setting
- IA is greater than the ***BRK 1 FLSHOVR AMP PKP*** setting

Six VT breaker flashover application

In a six-VT application, the VTs located on both sides of a breaker are available. When the breaker is open, the voltage difference across the breaker is the rated voltage if the line is not energized from the remote end, or it can be two times the rated voltage at the time of synchronization if the line is energized from the remote. At the occurrence of breaker flashover, the voltage difference across breaker drops and current greater than ***BRK 1 FLSHOVR AMP PKP*** starts flowing through the breaker. These conditions are also true for a normal closed operation of a breaker where the voltage difference across breaker is practically zero and load current flows through the breaker. To distinguish between breaker flashover and normal closed operation of breaker, the Breaker Status is utilized.

In a six-VT configuration, if the voltages from VTs located on one of the sides of breaker disappear due to VT fuse failure or other reason, a three-VT configuration can provide the breaker flashover detection. If however, the blocking of breaker flashover detection is wanted under voltage loss on one side condition, then it can be done by applying the appropriate FlexLogic operand to the ***BRK FLSHOVR BLOCK*** setting.

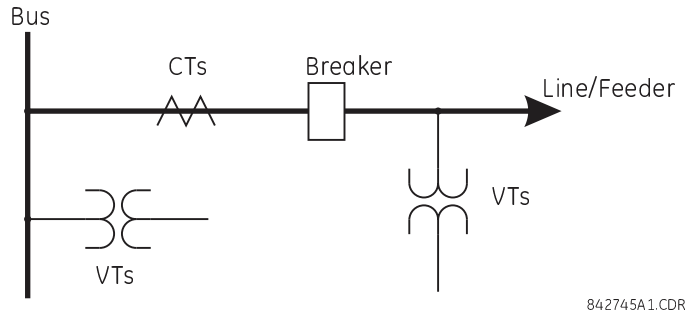

Figure 370: Breaker configuration (6-VT)

The source 1 (SRC1) phase currents are CTs and phase voltages are bus VTs. The source 2 (SRC2) phase voltages are line VTs. Contact input 1 is set as the breaker 52a contact (optional).

The conditions prior to flashover detection are:

- 52a status = 0
- VAg or Vag greater than the ***BRK 1 FLSHOVR V PKP*** setting
- IA is below ***BRK 1 FLSHOVR AMP PKP*** (ideally, IA = 0)
- DVA is greater than the ***BRK 1 FLSHOVR DIFF V PKP*** setting

The conditions at flashover detection are:

- 52a status = 0
- VAg or Vag greater or lesser than the ***BRK 1 FLSHOVR V PKP*** setting
- IA is greater than the ***BRK 1 FLSHOVR AMP PKP*** setting
- DVA is less than the ***BRK 1 FLSHOVR DIFF V PKP*** setting

> *Note:*
> *The element operates only when phase-to-ground voltages are connected to relay terminals. The flashover element does not operate if delta voltages are applied.*

Settings

BRK 1 FLSHOVR SIDE 1 SRC

This setting specifies a signal source used to provide three-phase voltages and three-phase currents from one side of the current breaker. The source selected as a setting and must be configured with breaker phase voltages and currents, even if only three VTs are available across the breaker.

BRK 1 FLSHOVR SIDE 2 SRC

This setting specifies a signal source used to provide another set of three phase voltages whenever six VTs are available across the breaker. For a three-VT application, set this setting to `None`.

BRK 1 STATUS CLSD A to BRK 1 STATUS CLSD C

These settings specify FlexLogic operands to indicate the closed status of the breaker. A separate FlexLogic operand can be selected to detect individual breaker pole status and provide flashover detection. The recommended setting is 52a breaker contact or another operand defining the breaker poles closed status.

> *Note:*
> *Leaving this setting off, meaning not configuring any FlexLogic to indicated Closed Breaker leads to maloperation of the element.*

BRK 1 FLSHOVR V PKP

This setting specifies a pickup level for the phase voltages from one or both sides of the breaker. If six VTs are available, opening the breaker leads to two possible combinations – live voltages from only one side of the breaker, or live voltages from both sides of the breaker. The detection of voltage above the selected value on either side of the breaker sets the scheme ready for flashover detection. Set ***BRK FLSHOVR V PKP*** to 85 to 90% of the nominal voltage.

BRK 1 FLSHOVR DIFF V PKP

This setting specifies a pickup level for the phase voltage difference when two VTs per phase are available across the breaker. Set this setting to be lower than the monitored voltage difference that is observed when closed or opened breaker resistors are left in service. The setting is selected as primary volts difference between the sources.

BRK 1 FLSHOVR AMP PKP

This setting specifies the normal load current which can flow through the breaker. Depending on the flashover protection application, the flashover current can vary from levels of the charging current when the line is not loaded to well above the maximum line (feeder) load (line/feeder connected to load).

BRK 1 FLSHOVR SPV A to BRK 1 FLSHOVR SPV C

These settings specify FlexLogic operands (per breaker pole) that supervise the operation of the element per phase. Supervision can be provided by operation of other protection elements, breaker failure, and close and trip commands. A six-cycle time delay applies after the selected FlexLogic operand resets.

BRK FLSHOVR PKP DELAY

This setting specifies the time delay to operate after a pickup condition is detected. Do not set it too long else the flashover current can disappear before its detection.

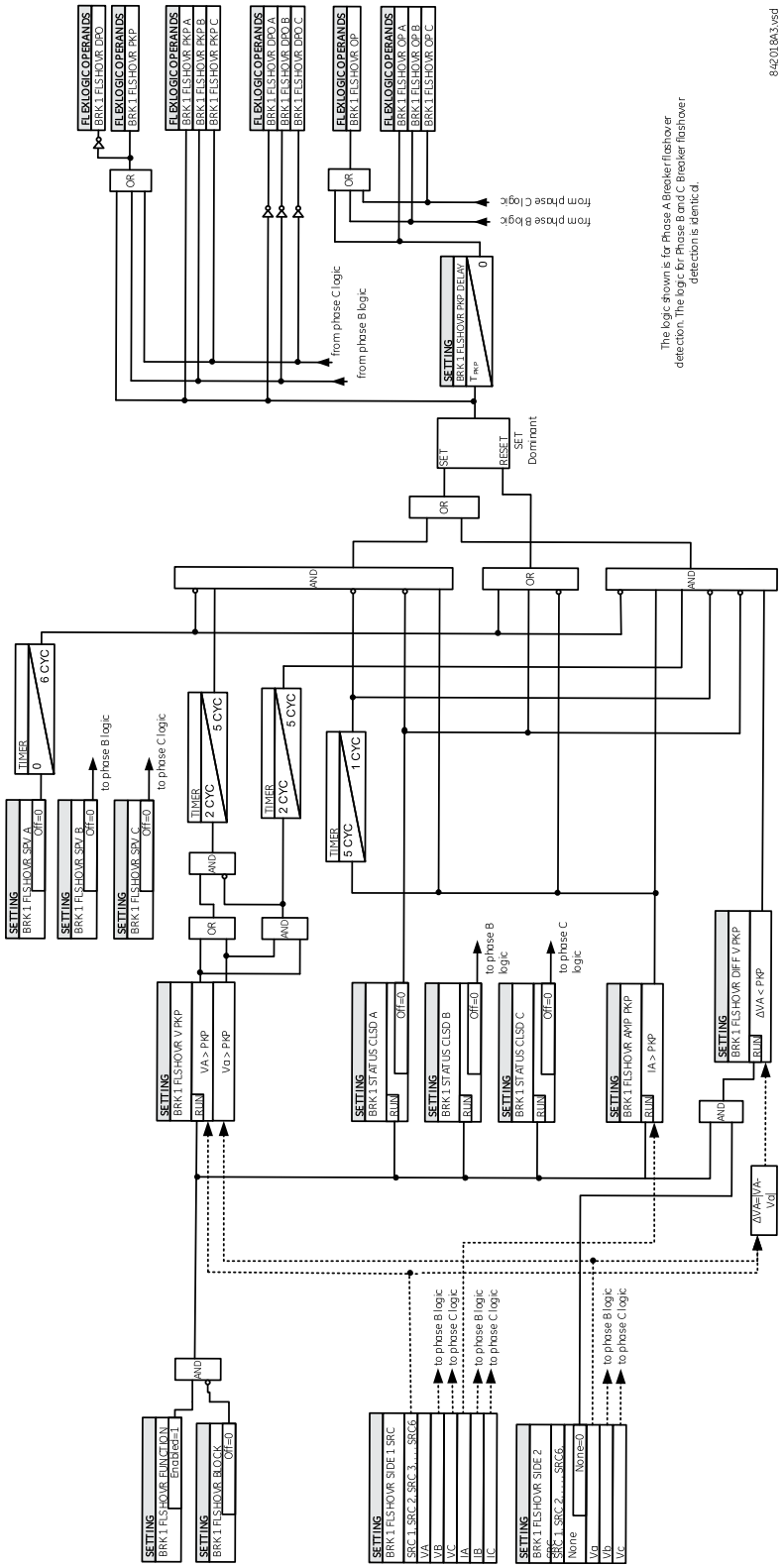

Figure 371: Breaker flashover logic

9.9.4 BREAKER RESTRIKE

Setting path: ***SETTINGS > CONTROL ELEMENTS > MONITORING ELEMENTS > BREAKER RESTRIKE <n>***

Note:
Only Breaker Restrike 1 is shown

■ BREAKER RESTRIKE 1 ■	⇔	BREAKER RESTRIKE 1 FUNCTION: Disabled	Range: Disabled, Enabled
	⇕	BRK RESTRIKE 1 BLOCK: Off	Range: FlexLogic operand
	⇕	BREAKER RESTRIKE 1 SOURCE: SRC 1	Range: SRC <n>
	⇕	BREAKER RESTRIKE 1 PICKUP: 0.50 pu	Range: 0.10 to 2.00 pu in steps of 0.01
	⇕	BREAKER RESTRIKE 1 RST DELAY: 0.100 s	Range: 0.000 to 65.535 s in steps of 0.001
	⇕	BREAKER RESTRIKE 1 HF DETECT: Enabled	Range: Disabled, Enabled
	⇕	BRK RSTR 1 BRK OPEN: Off	Range: FlexLogic operand
	⇕	BRK RSTR 1 OPEN CMD: Off	Range: FlexLogic operand
	⇕	BRK RSTR 1 CLS CMD: Off	Range: FlexLogic operand
	⇕	BREAKER RESTRIKE 1 TARGET: Self-reset	Range: Self-reset, Latched, Disabled
	⇧	BREAKER RESTRIKE 1 EVENTS: Disabled	Range: Disabled, Enabled

According to IEEE standard C37.100 entitled IEEE Standard Definitions for Power Switchgear, restrike is defined as:

A resumption of current between the contacts of a switching device during an opening operation after an interval of zero current of ¼ cycle at normal frequency or longer

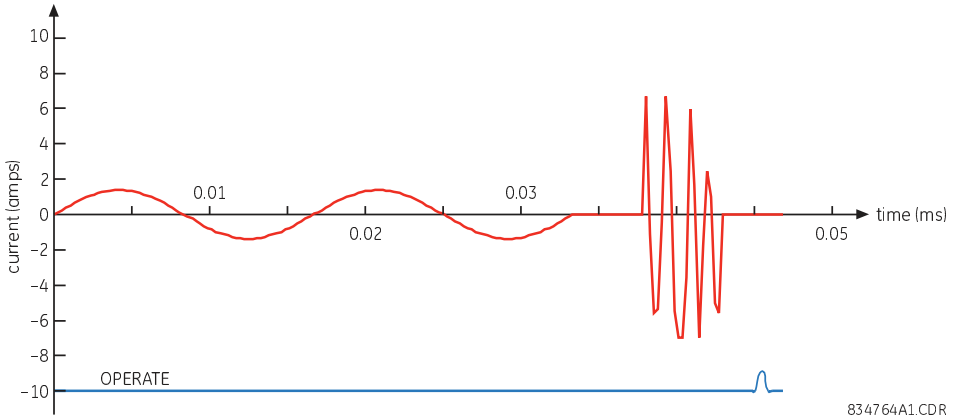

Figure 372: Typical restrike waveform and detection flag

The breaker restrike algorithm responds to a successful interruption of the phase current following a declaration of capacitor bank offline as per the breaker pole indication. If a high-frequency or system frequency current with a magnitude greater than the threshold is resumed at least ¼ of a cycle later than the phase current interruption, then a breaker restrike condition is declared in the corresponding phase and the BRK RESTRIKE 1 OP operand asserts

for a short period of time. The user can add counters and other logic to facilitate the decision making process as to the appropriate actions upon detecting a single restrike or a series of consecutive restrikes.

A restrike event (FlexLogic operand) is declared if all of the following hold:

- The current is initially interrupted
- The breaker status is open
- An elevated high frequency current condition occurs (if the ***BREAKER RESTRIKE 1 HF DETECT*** setting is Enabled, otherwise the condition is bypassed), and
- The current subsequently drops out again

The algorithm is illustrated in the following state machine diagram.

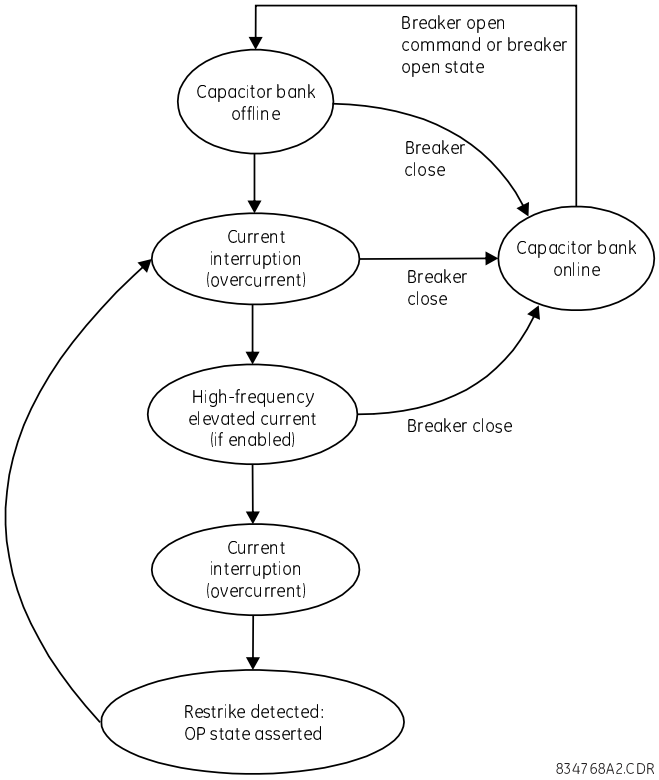

Figure 373: Algorithm illustration of state machine to detect restrike

In this way, a distinction is made between a self-extinguishing restrike and permanent breaker failure condition. The latter can be detected by the breaker failure function or a regular instantaneous overcurrent element. Also, a fast succession of restrikes is picked up by breaker failure or instantaneous overcurrent protection.

The following settings are available for each element.

BREAKER RESTRIKE 1 FUNCTION

Enables and disables operation of the breaker restrike detection element.

BRK RESTRIKE 1 BLOCK

Blocks operation of the breaker restrike detection element.

BREAKER RESTRIKE 1 SOURCE

Selects the source of the current for this element. This source must have a valid CT bank assigned.

BREAKER RESTRIKE 1 PICKUP

Specifies the pickup level of the overcurrent detector in per-unit values of CT nominal current.

BREAKER RESTRIKE 1 RST DELAY

Specifies the reset delay for this element. When set to `0 ms`, then FlexLogic operand is picked up for only 1/8th of the power cycle.

BREAKER RESTRIKE 1 HF DETECT

Enables/disables high-frequency (HF) pattern detection when breaker restrike occurs. High-frequency pattern is typical for capacitor bank, cables, and long transmission lines applications.

BRK RSTR 1 BRK OPEN

Assigns a FlexLogic operand indicating the open position of the breaker. It must be logic 1 when the breaker is open. It is important to assign either 52 contact with this setting or breaker close command with ***BRK RSTR 1 CLS CMD*** setting to give clear indication to the relay about breaker status.

BRK RSTR 1 OPEN CMD

Assigns a FlexLogic operand indicating a breaker open command. It must be logic 1 when the breaker is opened, either manually or from protection logic.

BRK RSTR 1 CLS CMD

Assigns a FlexLogic operand indicating a breaker close command. It must be logic 1 when the breaker is closed.

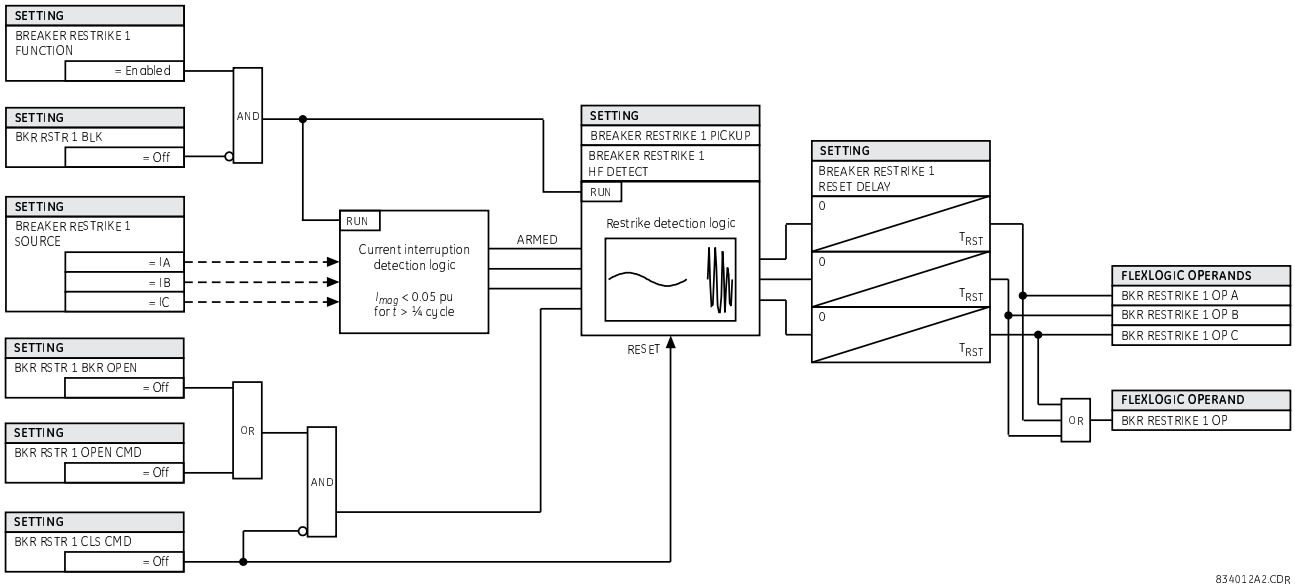

Figure 374: Breaker restrike logic

9.9.5 CT FAILURE DETECTOR

Setting path: ***SETTINGS > CONTROL ELEMENTS > MONITORING ELEMENTS > CT FAILURE DETECTOR <n>***

> *Note:*
> *Only CT Failure Detector 1 is shown*

■ CT FAILURE ■ DETECTOR 1	⇔	CT FAIL 1 FUNCTION: Disabled	Range: Disabled, Enabled
	⇕	CT FAIL 1 BLOCK: Off	Range: FlexLogic operand
	⇕	CT FAIL 1 3I0 INP 1: SRC <n>	Range: SRC <n>
	⇕	CT FAIL 1 3I0 INP 1 PKP: 0.2 pu	Range: 0.1 to 2.0 pu in steps of 0.1
	⇕	CT FAIL 1 3I0 INP 2: SRC <n>	Range: SRC <n>
	⇕	CT FAIL 1 3I0 INP 2 PKP: 0.2 pu	Range: 0.1 to 2.0 pu in steps of 0.1
	⇕	CT FAIL 1 3V0 INPUT: SRC <n>	Range: SRC <n>
	⇕	CT FAIL 1 3V0 INPUT PKP: 0.20 pu	Range: 0.04 to 2.00 pu in steps of 0.01
	⇕	CT FAIL 1 PICKUP DELAY: 1.000 s	Range: 0.000 to 65.535 s in steps of 0.001
	⇕	CT FAIL 1 TARGET: Self-reset	Range: Self-reset, Latched, Disabled
	⇧	CT FAIL 1 EVENTS: Disabled	Range: Disabled, Enabled

The CT failure function detects problems with system current transformers used to supply current to the relay. This logic detects the presence of a zero-sequence current at the supervised source of current without a simultaneous zero-sequence current at another source, zero-sequence voltage, or some protection element condition.

The CT failure logic (see later) is based on the presence of the zero-sequence current in the supervised CT source and the absence of one of three or all of the three following conditions:

- Zero-sequence current at different source current (can be different set of CTs or different CT core of the same CT)
- Zero-sequence voltage at the assigned source
- Appropriate protection element or remote signal

Settings are described as follows.

CT FAIL 1 FUNCTION

Enables or disables operation of the CT failure element.

CT FAIL 1 BLOCK

Selects a FlexLogic operand to block operation of the element during some condition (for example, an open pole in process of the single pole tripping-reclosing). Local signals or remote signals representing operation of some remote current protection elements via communication channels can also be chosen.

CT FAIL 1 3I0 INPUT 1

Selects the current source for input 1. The most critical protection element should also be assigned to the same source.

CT FAIL 1 3I0 INPUT 1 PICKUP

Selects the 3I_0 pickup value for input 1 (the main supervised CT source).

CT FAIL 1 3I0 INPUT 2

Selects the current source for input 2. Input 2 should use a different set of CTs or a different CT core of the same CT. If 3I_0 does not exist at source 2, then a CT failure is declared.

CT FAIL 1 3I0 INPUT 2 PICKUP

Selects the 3I_0 pickup value for input 2 (different CT input) of the relay.

CT FAIL 1 3V0 INPUT

Selects the voltage source.

CT FAIL 1 3V0 INPUT PICKUP

Specifies the pickup value for the 3V_0 source.

CT FAIL 1 PICKUP DELAY

Specifies the pickup delay of the CT failure element.

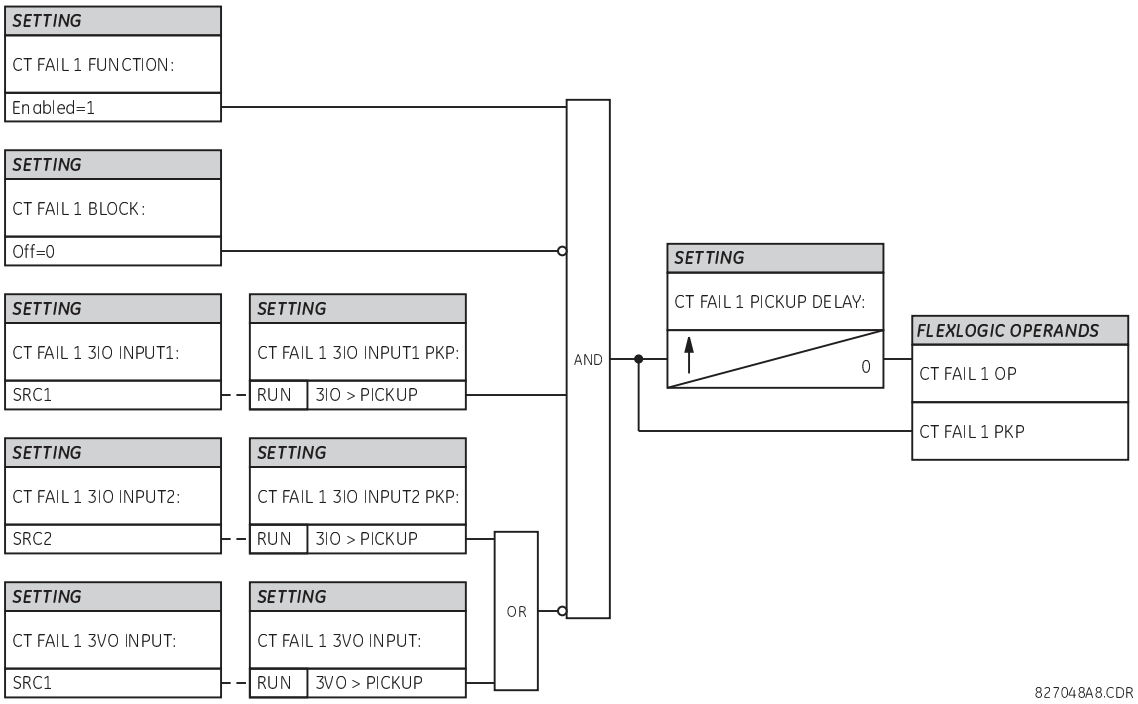

Figure 375: CT failure detector logic

9.9.6 INCIPIENT FAULT DETECTOR

Setting path: ***SETTINGS > CONTROL ELEMENTS > MONITORING ELEMENTS > INCIPIENT FAULT <n>***

> *Note:*
> *Only Incipient Fault 1 is shown*

■ INCIPIENT FAULT 1 ■	⇔	INCIPIENT FAULT 1 FUNCTION: Disabled	Range: Disabled, Enabled
	⇕	INCIPNT FLT 1 BLOCK: Off	Range: FlexLogic operand

⇕	INCIPIENT FAULT 1 SOURCE: SRC 1	Range: SRC <n>
⇕	INCIPIENT FAULT 1 PICKUP: 0.50 pu	Range: 0.10 to 10.00 pu in steps of 0.01
⇕	INCIPNT FLT 1 MODE: Number of counts	Range: Number of counts, Counts per window
⇕	INCIPIENT FLT 1 TRIP COUNTS NUMBER: 2	Range: 1 to 10 in steps of 1
⇕	INCIPNT FLT 1 DETECT WINDOW: 10.00 s	Range: 0.00 to 1000.00 s in steps of 0.01
⇕	INCIPIENT FAULT 1 RESET DELAY: 0.100 s	Range: 0.000 to 65.535 s in steps of 0.001
⇕	INCIPIENT FAULT 1 TARGET: Self-reset	Range: Self-reset, Latched, Disabled
⇧	INCIPIENT FAULT 1 EVENTS: Disabled	Range: Disabled, Enabled

Before a permanent cable fault occurs, there are usually signs of degrading insulation manifesting itself as a short, mostly half-cycle spikes asserting at the phase voltage peak. Due to shortness of such spikes, they are not usually detected by the instantaneous protection of the feeder, which operates on the RMS or fundamental component of the phase current with a relatively high pickup.

The number of detected incipient faults in each phase is counted and available in the ***ACTUAL VALUES > STATUS > INCIPIENT FAULT*** menus. The counters can be reset with the ***COMMANDS > CLEAR RECORDS > CLEAR INCIPIENT FAULT COUNTERS*** command.

Note:
Changes to any of the incipient cable fault detector settings resets of the number of the incipient faults detected to zero.

To provide a clear timing indication when the incipient fault occurred, the incipient fault event is time-stamped with the time the fault actually occurred. However, the FlexLogic operand is asserted four cycles later, when the incipient fault pattern is confirmed and therefore detected.

The figure illustrates a recorded field case of an incipient phase B fault. The top portion of the figure shows the raw A, B, and C currents. The bottom portion shows the neutral current (blue) and reveals the fault period from under the load and the superimposed phase B current (red). The superimposed current shows two fault current blips as the data slides through the two-cycle memory window. During the actual fault, the neutral current and the superimposed phase B currents closely correspond, confirming the incipient fault hypothesis and identifying the affected phase.

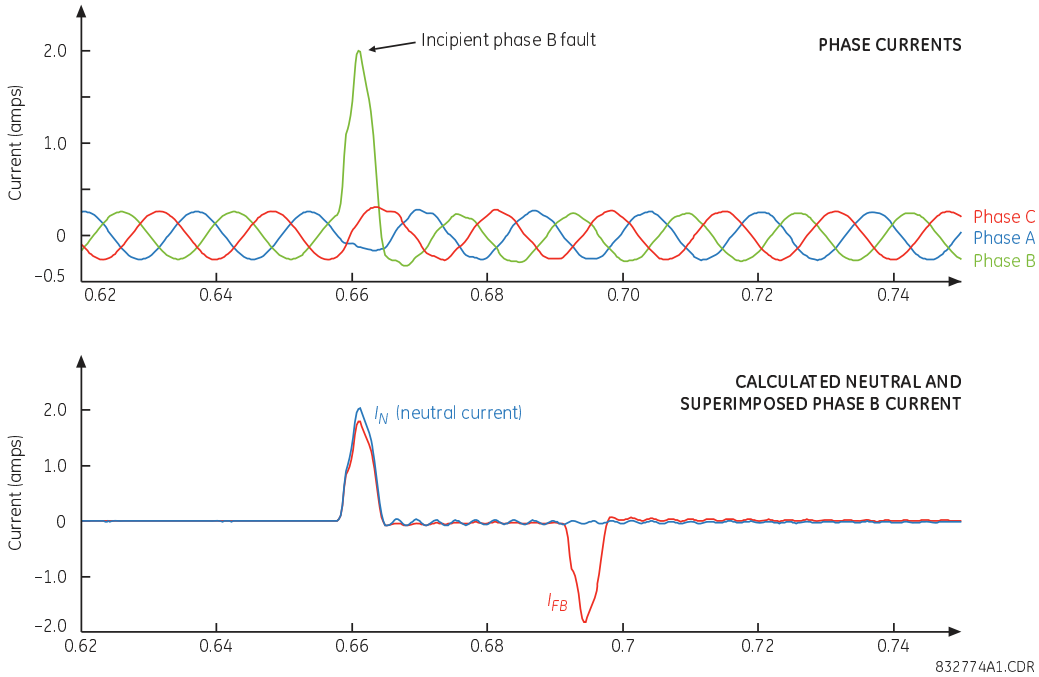

Figure 376: Illustration of the incipient fault detector algorithm

The following settings are available for each incipient cable fault detector.

INCIPIENT FAULT 1 FUNCTION

This setting enables and disables operation of the incipient fault detection element.

INCIPNT FLT 1 BLOCK

Blocks operation of the incipient cable fault detector element. Assertion of the FlexLogic operand assigned to this setting blocks operation.

INCIPIENT FAULT 1 SOURCE

Selects a current source for the incipient cable fault detector element. This source must be assigned a valid CT bank.

INCIPIENT FAULT 1 PICKUP

Specifies the pickup level of the overcurrent detector in per-unit values of the CT nominal current.

INCIPNT FLT 1 MODE

There are two modes of operation available for the incipient cable fault detector element. In the `Number of counts` mode, a trip is initiated only after the selected number of faults is detected. In the `Counts per window` mode, a trip is initiated only after the selected number of faults is detected within the time specified by the ***INCIPNT FLT 1 DETECT WINDOW*** setting.

INCIPIENT FLT 1 TRIP COUNTS NUMBER

Selects the number of faults required to initiate a trip.

INCIPNT FLT 1 DETECT WINDOW

Specifies a time window for `Counts per window` mode of operation.

INCIPIENT FAULT 1 RESET DELAY

Specifies a reset time for the output after the trip is initiated.

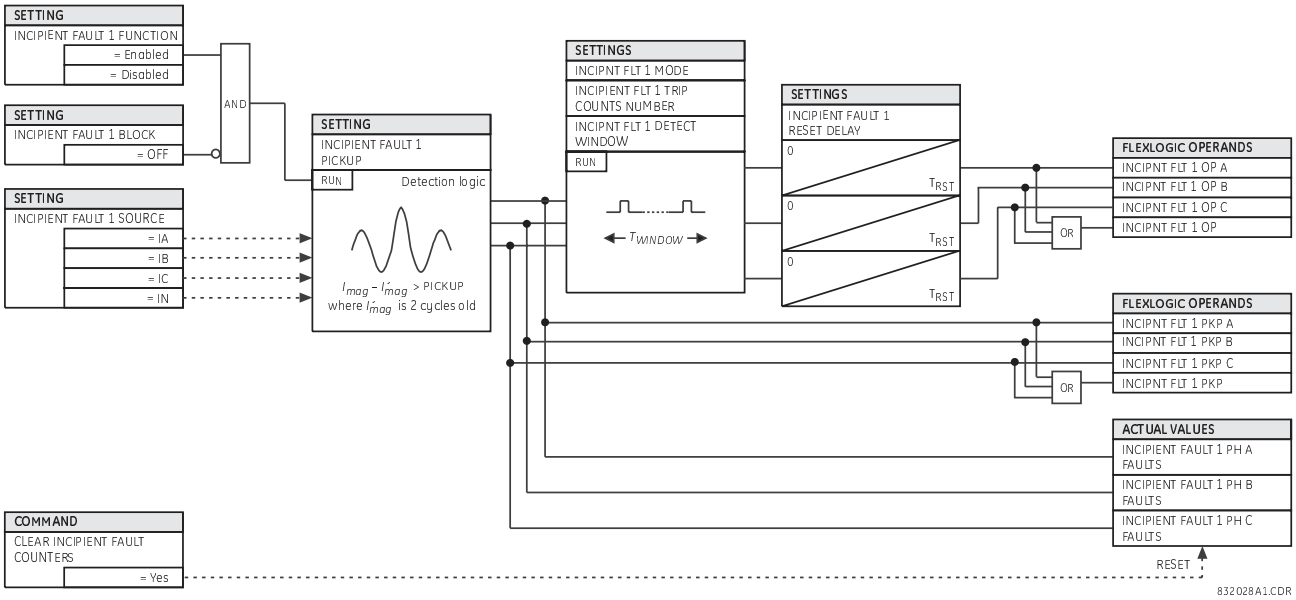

Figure 377: Incipient cable fault detector logic

9.9.7 VT FUSE FAILURE

Setting path: ***SETTINGS > CONTROL ELEMENTS > MONITORING ELEMENTS > VT FUSE FAILURE <n>***

> *Note:*
> *Only VT Fuse Failure 1 is shown*

■ VT FUSE FAILURE 1 ■	⇔	VT FUSE FAILURE 1 FUNCTION: Disabled	Range: Disabled, Enabled
	⇕	VT FUSE FAILURE 1 CT SOURCE: SRC 1	Range: SRC <n> B30 only
	⇕	VT FUSE FAILURE 1 ALARM DELAY: 1.000 s	Range: 0.000 to 65.535 s in steps of 0.001
	⇕	NEUTRAL WIRE OPEN 1 DETECTION: Disabled	Range: Disabled, Enabled
	⇧	NEUTRAL WIRE OPEN 1 3 HARM PKP: 0.100 pu	Range: 0.004 to 3.000 pu in steps of 0.001

Every signal source includes a fuse failure scheme. A signal source must have a three-phase VT bank and a three-phase CT bank assigned to it, in order for the fuse failure scheme to operate.

The VT fuse failure detector is used to raise an alarm and/or block elements that operate incorrectly for a full or partial loss of AC potential caused by one or more blown fuses. Some elements that can be blocked (via the BLOCK input) are distance, voltage restrained overcurrent, and directional current.

There are two classes of fuse failure that occur:

- Class A — Loss of one or two phases
- Class B — Loss of all three phases

Different means of detection are required for each class. An indication of class A failures is a significant level of negative-sequence voltage, whereas an indication of class B failures is when positive sequence current is present and there is an insignificant amount of positive sequence voltage. Also, a rapid decrease in the phase voltages magnitude from a healthy voltage level without disturbance in current can indicate VT fuse fail conditions. These noted indications of fuse failure can also be present when faults are present on the system, so a means of detecting faults and inhibiting fuse failure declarations during these events is provided.

Once the fuse failure condition is declared, it is sealed-in until the cause that generated it disappears.

An additional condition is introduced to inhibit a fuse failure declaration when the monitored circuit is de-energized; positive-sequence voltage and current are both below threshold levels.

VT FUSE FAILURE 1 FUNCTION

Enables and disables the fuse failure feature for Source 1 VT Fuse Fail.

NEUTRAL WIRE OPEN 1 DETECTION

Enables and disables the VT neutral wire open detection function. When the VT is connected in Delta, do not enable this function because there is no neutral wire for Delta connected VT.

NEUTRAL WIRE OPEN 1 3 HRAM PKP

Specifies the pickup level of 3rd harmonic of 3V0 signal for the NEUTRAL WIRE OPEN DETECTION logic to pick up.

Base voltage for this element is ***PHASE VT SECONDARY*** setting in the case of WYE VTs and (PHASE VT SECONDARY)/√3 in case of DELTA VTs. The setting is found under ***SETTINGS > SYSTEM SETUP > AC INPUTS > VOLTAGE BANK > PHASE VT SECONDARY.***

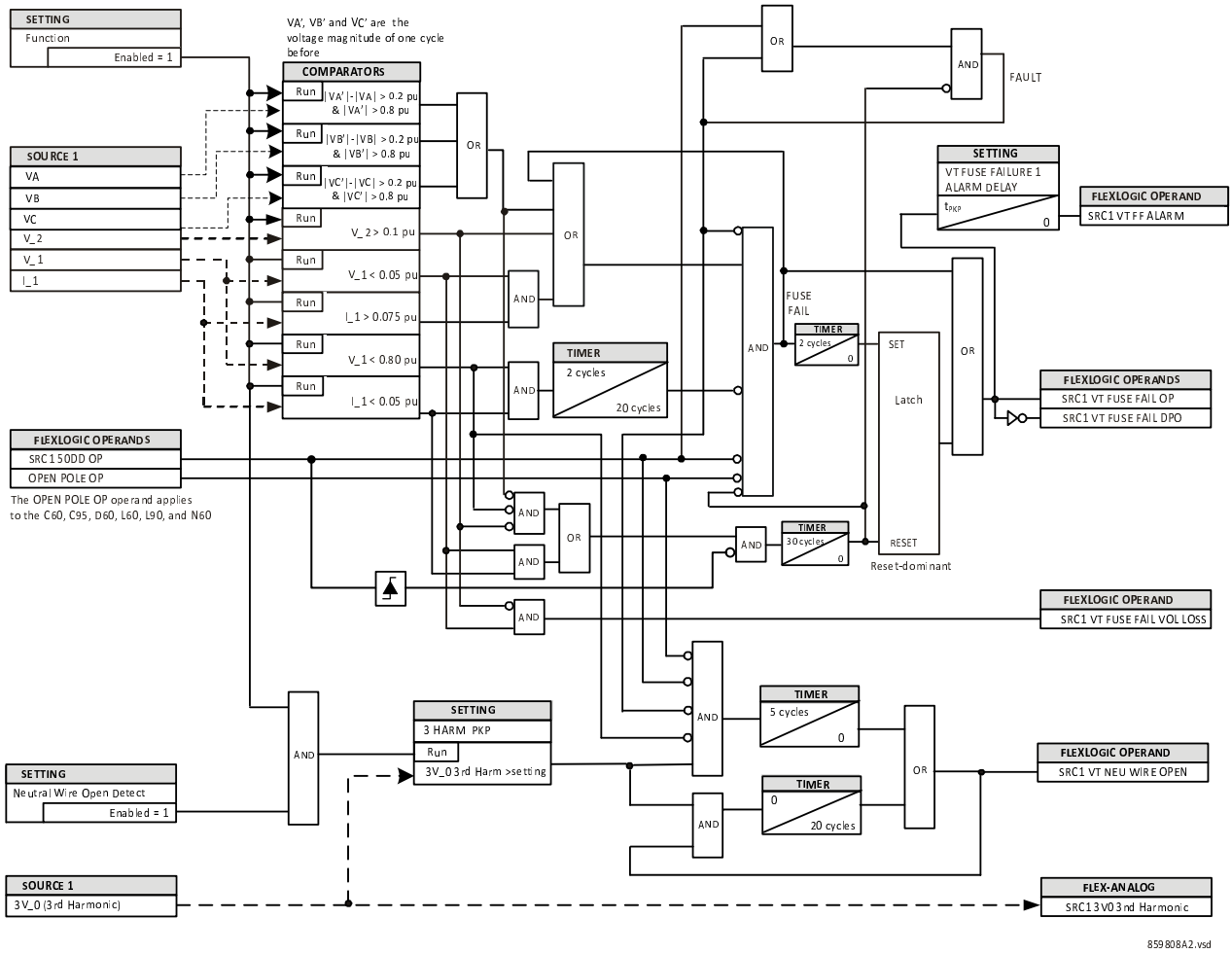

Figure 378: VT fuse fail logic

9.9.8 OPEN POLE DETECTOR

Setting path: ***SETTINGS > CONTROL ELEMENTS > MONITORING ELEMENTS > OPEN POLE***

■ OPEN POLE ■	⇔	OPEN POLE FUNCTION: Disabled	Range: Disabled, Enabled
	⇕	OPEN POLE BLOCK: Off	Range: FlexLogic operand
	⇕	OPEN POLE VOLTAGE SUPV: Disabled	Range: Disabled, Enabled
	⇕	OPEN POLE CURRENT PKP: 0.050 pu	Range: 0.020 to 30.000 pu in steps of 0.001
	⇕	OPEN POLE LINE XC1: 9999.9 Ω	Range: 300.0 to 9999.9 ohms in steps of 0.001
	⇕	OPEN POLE LINE XC0: 9999.9 Ω	Range: 300.0 to 9999.9 ohms in steps of 0.001
	⇕	OPEN POLE REM CURR PKP: 0.050 pu	Range: 0.020 to 30.000 pu in steps of 0.001
	⇕	OPEN POLE MODE: Accelerated	Range: Accelerated, Traditional

⇕	OPEN POLE DETECTION: I AND V AND CBaux	Range: I AND V AND CBaux, I AND V only
⇕	OPEN POLE TARGET: Self-reset	Range: Self-reset, Latched, Disabled
⇧	OPEN POLE EVENTS: Disabled	Range: Disabled, Enabled

The open pole detector is intended to identify an open pole of the line circuit breaker. The scheme monitors the breakers auxiliary contacts, current in the circuit, and optionally voltage on the line. The scheme generates output operands used to block the phase selector and some specific protection elements, thus preventing maloperation during the dead time of a single-pole autoreclose cycle or any other open pole conditions.

The scheme declares an open pole at the moment a single-pole trip is issued.

In two-breaker and breaker-and-a-half applications, an open pole condition is declared when one or more of the following hold:

- Both breakers have an open pole on the same phase
- The current on the line drops below a threshold
- The current and voltage on the line drop below a threshold

The open pole feature uses signals defined by the ***GROUPED ELEMENTS > SETTING GROUP <n> > DISTANCE > DISTANCE SOURCE*** setting. Voltage supervision can be used only with wye VTs on the line side of the breaker.

OPEN POLE CURRENT PICKUP

This setting establishes the current threshold below which an open pole is declared.

OPEN POLE LINE XC1

Specifies positive-sequence reactance of the entire line. If shunt reactors are applied, this value is a net capacitive reactance of the line and the reactors installed between the line breakers. The value is entered in secondary ohms. This setting is relevant if open pole condition at the remote end of the line is to be sensed and utilized by the relay.

OPEN POLE LINE XC0

Specifies zero-sequence reactance of the entire line. If shunt reactors are applied, this value is a net capacitive reactance of the line and the reactors installed between the line breakers. The value is entered in secondary ohms. This setting is relevant if open pole condition at the remote end of the line is to be sensed and utilized by the relay (OPEN POLE REM OP FlexLogic operand).

OPEN POLE REM CURR PKP

Specifies pickup level for the remote-end current estimated by the relay as the local current compensated by the calculated charging current. The latter is calculated based on the local voltages and the capacitive reactances of the line. This setting is relevant if open pole condition at the remote end of the line is to be sensed and utilized by the relay (OPEN POLE REM OP FlexLogic operand).

OPEN POLE MODE

Selects the mode of operation of the open pole function. When the “Accelerated” mode is chosen, an open pole is declared ½ cycle after trip output operation and before the breaker pole opens. This blocks distance loops involved in the faulted phase and phase selector, and arms the trip output to produce three-pole trip for the next fault. If the fault evolves into multi-phase fault before breaker pole opens for the first fault, the remaining in-service distance loops initiates a three-pole trip. When the “Traditional” mode is selected, then an open pole is declared only after the breaker opens and current disappears. If the fault evolves into a multi-phase fault before the circuit breaker pole opens for the first fault, the phase selector changes the fault type from a single-line-to-ground fault to a multi-phase fault, thereby initiating a three-pole trip.

OPEN POLE DETECTION

Selects the signals used to detect an open pole condition. When `I AND V AND CBaux` value is selected, the breaker 52 contacts and the current with optional voltage signals are used to determine open pole conditions. For the `I AND V only` selection, only the current with optional voltage signals are used.

For convenience, the position of the breaker poles defined in the breaker control feature and available as FlexLogic operand BREAKER 1ΦA CLSD through BREAKER 1 ΦC CLSD and BREAKER 1 OOS are used by the open pole feature if the `I AND V AND CBaux` detection value is selected.

For correct operation of the open pole detector, the breaker control, trip output, and single-pole autoreclose features must be enabled and configured properly. When used in configuration with only one breaker, set the ***BREAKER 2 FUNCTION*** to `Enabled` and the ***BREAKER 2 OUT OF SV*** setting to `On`.

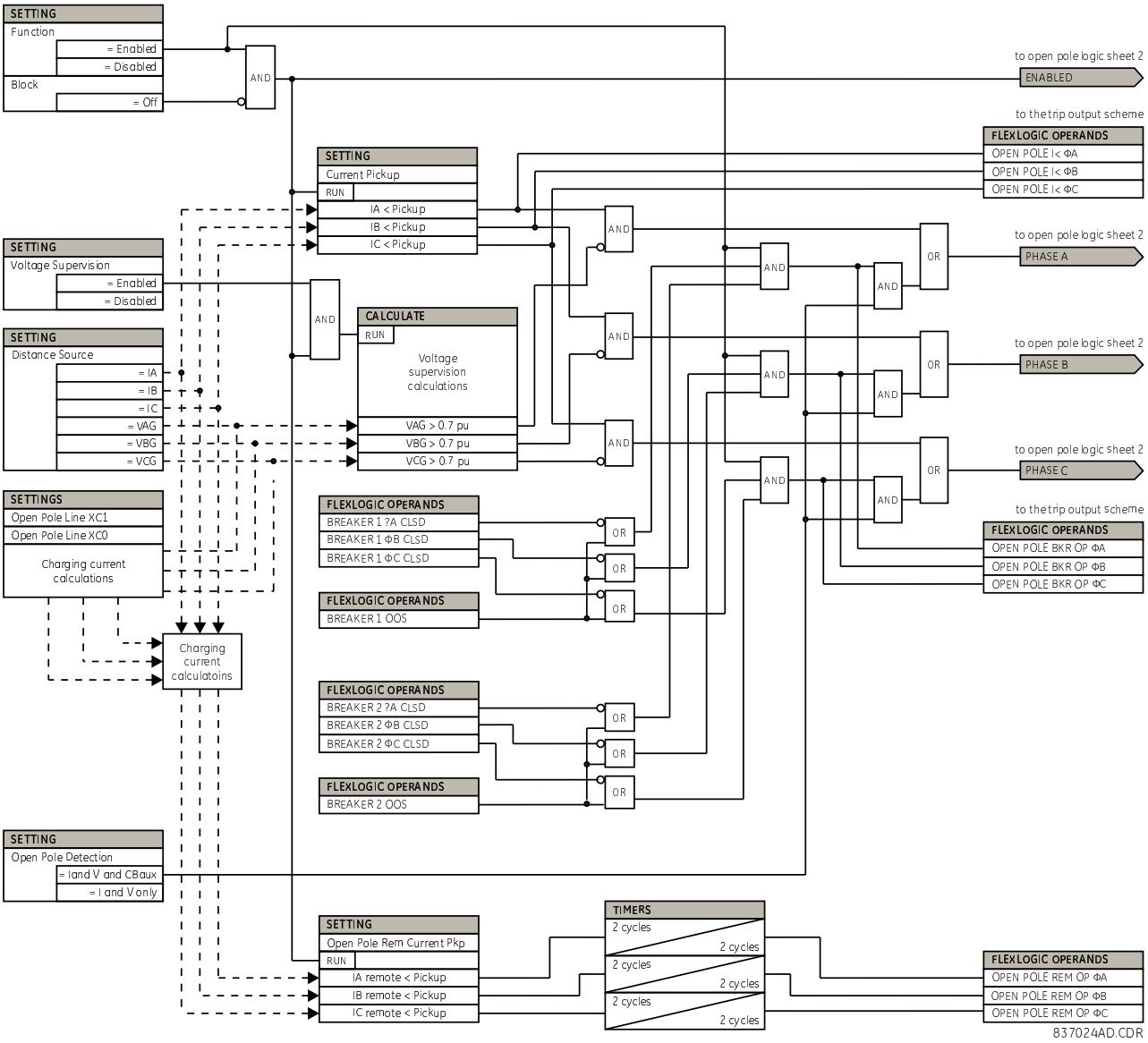

Figure 379: Open pole detector logic (Sheet 1 of 2)

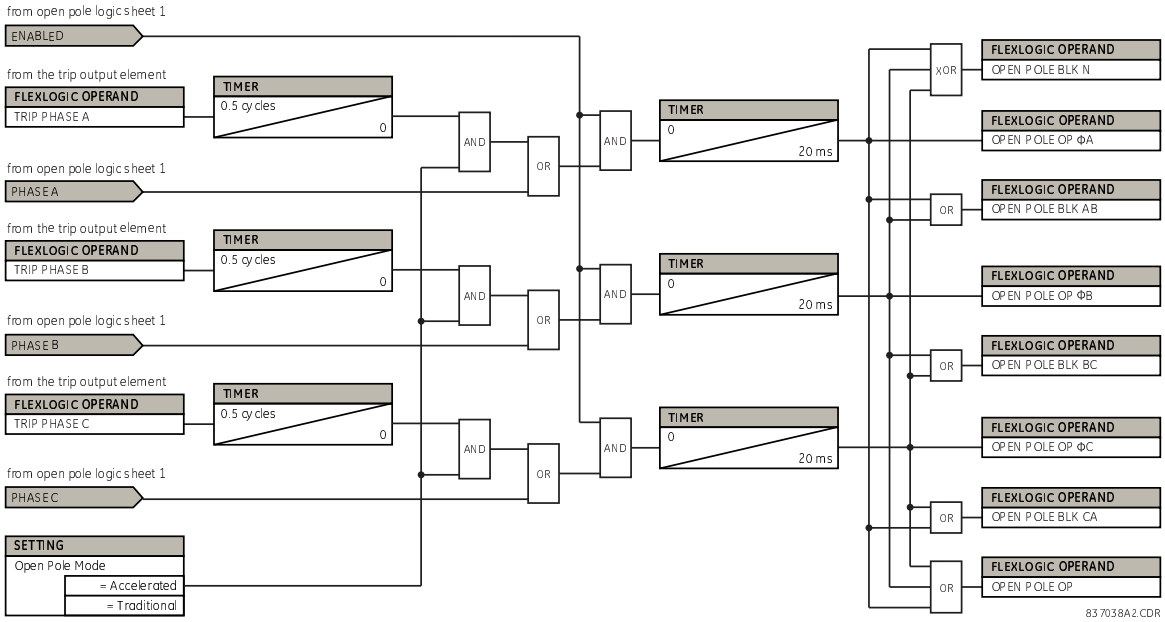

Figure 380: Open pole detector logic (Sheet 2 of 2)

9.9.9 THERMAL OVERLOAD PROTECTION (ANSI 49)

Setting path: ***SETTINGS > CONTROL ELEMENTS > MONITORING ELEMENTS > THERMAL OVERLOAD PROTECTION > THERMAL PROTECTION <n>***

> *Note:*
> *Only Thermal Protection 1 is shown*

■ THERMAL ■ PROTECTION 1	⇔	THERMAL PROTECTION 1 FUNCTION: Disabled	Range: Disabled, Enabled
	⇕	THERMAL PROTECTION 1 SOURCE: SRC1	Range: SRC <n>
	⇕	THERMAL PROTECTION 1 MODE: 3-PHASE	Range: 3-Phase, 1-Phase
	⇕	THERMAL PROTECTION 1 BASE CURR: 0.80 pu	Range: 0.20 to 3.00 pu in steps of 0.01
	⇕	THERMAL PROTECTION 1 k FACTOR: 1.10	Range: 0.20 to 4.00 in steps of 0.05
	⇕	THERMAL PROTECTION 1 ALARM LEVEL: 0.5 pu	Range: 0.2 to 1.0 pu in steps of 0.1
	⇕	THERM PROT 1 TRIP TIME CONST: 45.0 min	Range: 0.0 to 999.0 minutes in steps of 0.1
	⇕	THERM PROT 1 RESET TIME CONST: 45.0 min	Range: 0.0 to 999.0 minutes in steps of 0.1
	⇕	THERM PROT 1 MINIM RESET TIME: 20.0 min	Range: 0.0 to 999.0 minutes in steps of 0.1
	⇕	THERM PROT 1 RESET: Off	Range: FlexLogic operand

⇕	THERM PROT 1 BLOCK: Off	Range: FlexLogic operand
⇕	THERMAL PROTECTION 1 TARGET: Self-reset	Range: Self-reset, Latched, Disabled
⇧	THERMAL PROTECTION 1 EVENTS: Disabled	Range: Disabled, Enabled

The thermal overload protection element corresponds to the IEC 255-8 standard and is used to detect thermal overload conditions in protected power system elements. Choosing an appropriate time constant element can be used to protect different elements of the power system.

The cold curve characteristic is applied when the estimated I_p current is less than 10% of the base current. If I_p current is greater or equal than 10% than the base current, then the hot curve characteristic is applied. The Ip current is estimated with a fixed time constant for both cooling and heating that reaches to the final value in two seconds on a step change (either step up or step down) signal.

The IEC255-8 cold curve trip time is defined as follows:

$$t_{op} = \tau_{op} \times \ln [I^2 / (I^2 - (kI_b)^2)]$$

The IEC255-8 hot curve trip time is defined as follows:

$$t_{op} = \tau_{op} \times \ln [(I^2 - I_p^2) / (I^2 - (kI_b)^2)]$$

where:

- t = time to operate
- τ = thermal protection trip time constant
- I = measured overload RMS current
- I_p = measured load RMS current before overload occurs
- k =IEC 255-8 k-factor applied to IB, defining maximum permissible current above nominal current. A typical value range for this k factor is 1.0 to 1.5 per the standard
- I_b = protected element base (nominal) current

To ensure element accuracy for high overcurrent conditions, the maximum value of $I/(k \times I_b)$ is limited to 8, even when realistically it is exceeding this value.

The reset time of the thermal overload protection element is also time delayed using following formula:

$$t_{rst} = \tau_{rst} \times \ln [(kI_b)^2) / (I^2 - (kI_b)^2)] + T_{min}$$

where:

- τ_{rst} = thermal protection trip time constant
- T_{min} = a minimum reset time setting

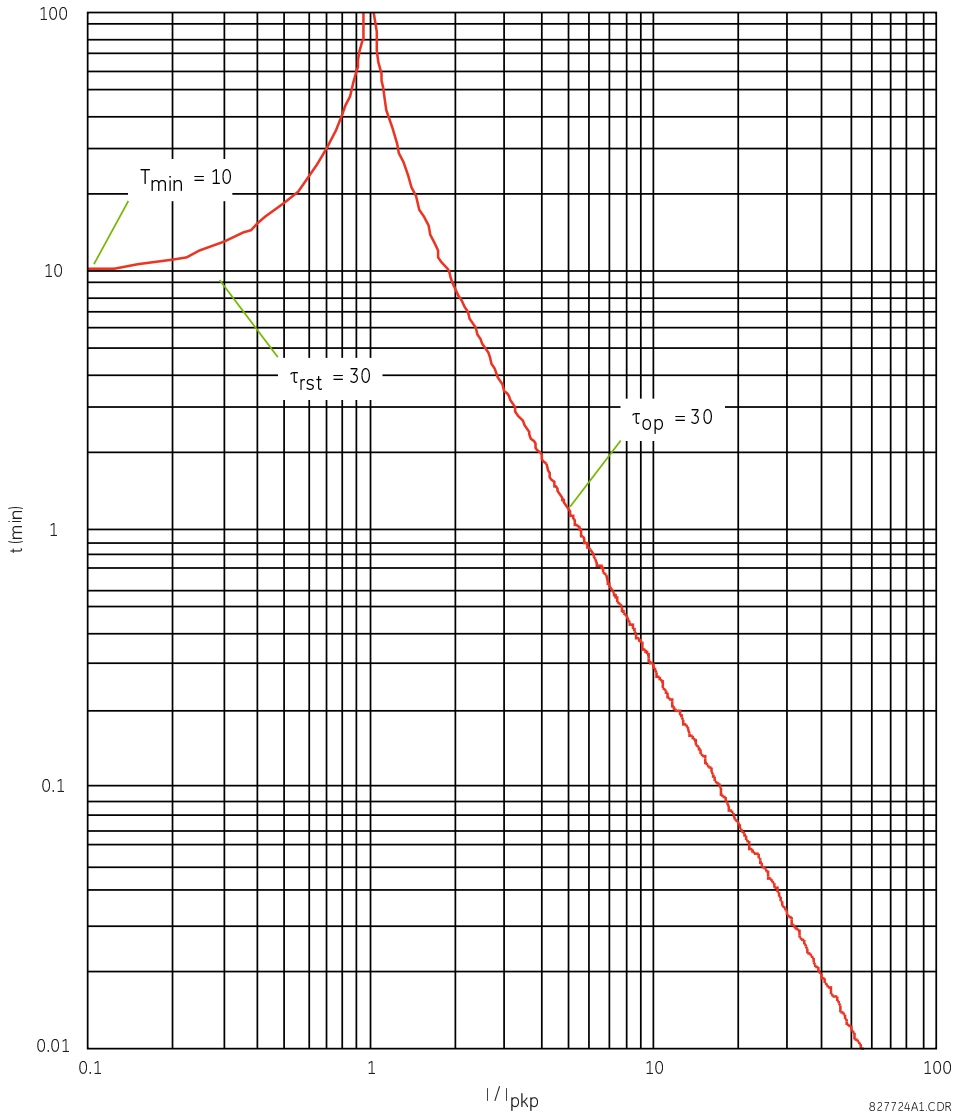

Figure 381: IEC 255-8 sample operate and reset curves

The thermal overload protection element estimates accumulated thermal energy E using the following equations calculated each power cycle. When current is greater than the pickup level, $I_n > k \times I_b$, element starts increasing the thermal energy:

$$E_n = E_{n-1} + \Delta t / t_{op(In)}$$

When current is less than the dropout level, $I_n > 0.97 \times k \times I_b$, the element starts decreasing the thermal energy:

$$E_{rst} = E_{n-1} + \Delta t / t_{rst(In)}$$

where

- Δt is the power cycle duration
- n is the power cycle index
- $t_{op(In)}$ is the trip time calculated at index n as per the IEC255-8 cold curve or hot curve equations
- $t_{rst(In)}$ is the reset time calculated at index n as per the reset time equation
- I_n is the measured overload RMS current at index n
- E_n is the accumulated energy at index n
- E_{n-1} is the accumulated energy at index n – 1

The thermal overload protection element removes the THERMAL PROT 1 OP and THERMAL PROT 1 ALARM output operand when E < 0.05. In case of emergency, the thermal memory and as a result THERMAL PROT 1 OP and THERMAL PROT 1 ALARM output operands can be reset using ***THERM PROT 1 RESET*** setting.

The calculations are performed per the selected mode (three-phase or single-phase). For three-phase, calculations are performed per phase. If the accumulated energy reaches value 1 pu in any phase, the thermal overload protection element operates and only resets when energy is less than 0.05 in all three phases. The THERMAL PROT 1 ALARM operand asserts if accumulated energy reaches the selected ***THERMAL PROTECTION 1 ALARM LEVEL*** setting in any phase an resets only when energy is below 0.05 in all three phases.

In single-phase mode, the thermal energy of only the ground channel IG of the assigned source is accumulated.

Typical time constants

Protected equipment	Time constant	Minimum reset time
Capacitor bank	10 minutes	30 minutes
Overhead line	10 minutes	20 minutes
Air-core reactor	40 minutes	30 minutes
Busbar	60 minutes	20 minutes
Underground cable	20 to 60 minutes	60 minutes

The figure shows the logic for the thermal overload protection element

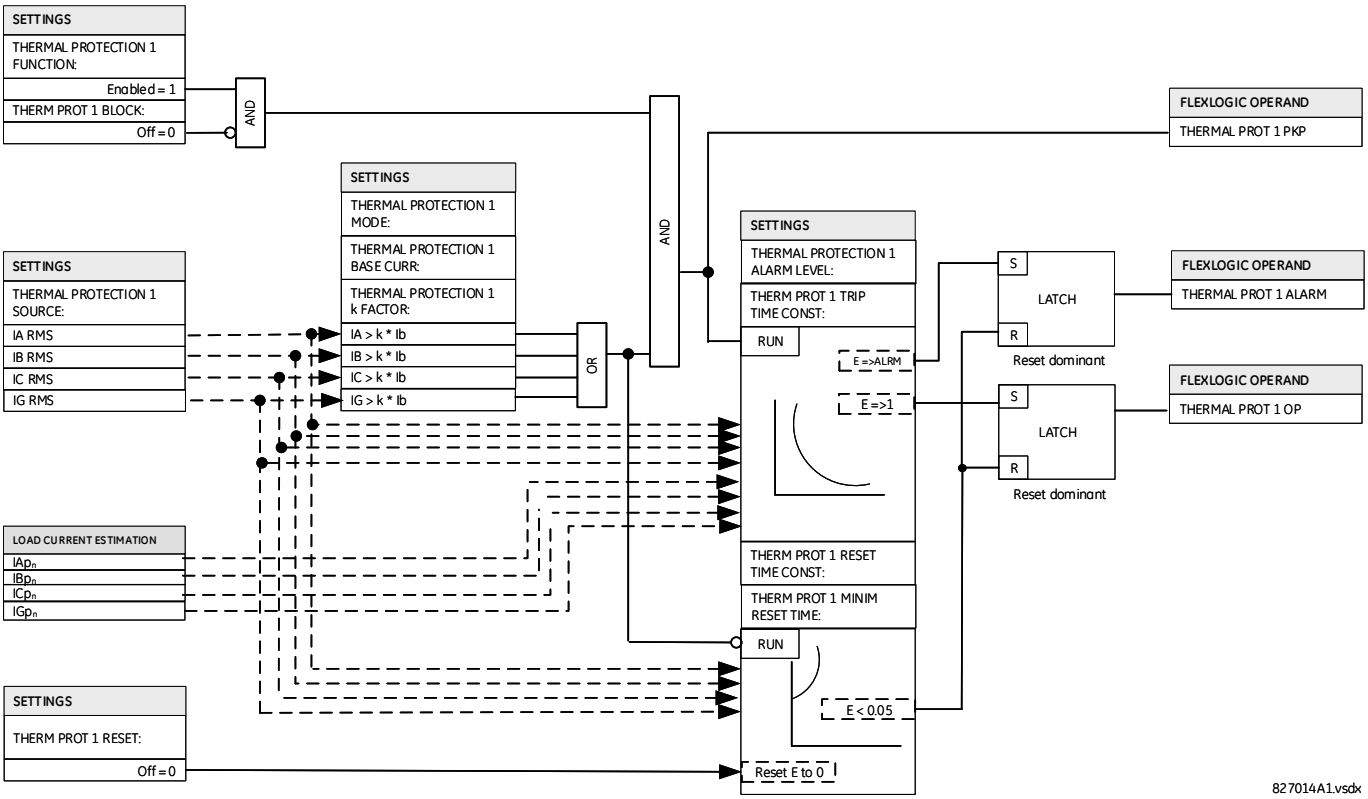

Figure 382: Thermal overload protection logic

9.9.10 BROKEN CONDUCTOR DETECTION

Setting path: ***SETTINGS > CONTROL ELEMENTS > MONITORING ELEMENTS > BROKEN CONDUCTOR <n>***

Note:
Only Broken Conductor 1 is shown

■ BROKEN CONDUCTOR 1 ■	⇔	BROKEN CONDUCTOR 1 FUNCTION: Disabled	Range: Disabled, Enabled
	⇕	BROKEN CONDUCTOR 1 SOURCE: SRC 1	Range: SRC <n>
	⇕	BROKEN CONDUCTOR 1 I2/I1 RATIO: 20%	Range: 20.0% to 100.0% in steps of 0.1%
	⇕	BROKEN CONDUCTOR 1 I1 MIN: 0.10 pu	Range: 0.05 to 1.00 pu in steps of 0.01
	⇕	BROKEN CONDUCTOR 1 I1 MAX: 1.50 pu	Range: 0.05 to 5.00 pu in steps of 0.01
	⇕	BROKEN CONDUCTOR 1 PKP DELAY: 20.000 s	Range: 0.000 to 65.535 s in steps of 0.001
	⇕	BROKEN CONDCT 1 BLK: Off	Range: FlexLogic operand
	⇕	BROKEN CONDUCTOR 1 TARGET: Self-reset	Range: Self-reset, Latched, Disabled
	⇧	BROKEN CONDUCTOR 1 EVENTS: Disabled	Range: Disabled, Enabled

The broken conductor function detects a transmission line broken conductor condition or a single-pole breaker malfunction condition by checking the phase current input signals and the I_2 / I_1 ratio. The intent is to detect a single-phase broken conductor only. As such, two-phase or three-phase broken conductors cannot be detected.

To distinguish between single-phase disappearance and system disturbance in all three phases (such as load change and switching), the broken conductor element monitors the change in all three phase currents at the present instance and at four cycles previous. It also monitors changes in the I_2 / I_1 ratio, I_1 minimum, and I_1 maximum.

Do not use the broken conductor function to respond to fault transients and single-pole tripping/reclosing conditions. Therefore, program the time delay to a sufficient length to ensure coordination with the breaker dead time of the recloser function.

BROKEN CONDUCTOR 1 FUNCTION

This setting enables and disables the broken conductor function.

BROKEN CONDUCTOR 1 SOURCE

Selects a signal source used to provide three-phase current inputs to this function.

BROKEN CONDUCTOR 1 I2/I1 RATIO

This setting specifies the ratio of negative-sequence current to positive-sequence current. When one phase conductor is broken, the I_2 / I_1 ratio with a balanced remaining two phases is 50%. So normally you this setting below 50% (for example, to 30%).

BROKEN CONDUCTOR 1 I1 MIN

This setting specifies the minimum positive-sequence current supervision level. Ensure this setting is programmed to a sufficient level to prevent I_2 / I_1 from erratic pickup due to a low I_1 signal. However, do not set this setting too high, since the broken conductor condition cannot be detected under light load conditions when I_1 is less than the value specified by this setting.

BROKEN CONDUCTOR 1 I1 MAX

This setting specifies the maximum I_1 level allowed for the broken conductor function to operate. When I_1 exceeds this setting, this it is considered a fault. In order for this function to not respond to any fault conditions, set this setting to less than the maximum load current.

BROKEN CONDUCTOR 1 PKP DELAY

This setting specifies the pickup time delay for this function to operate after assertion of the broken conductor pickup FlexLogic operand.

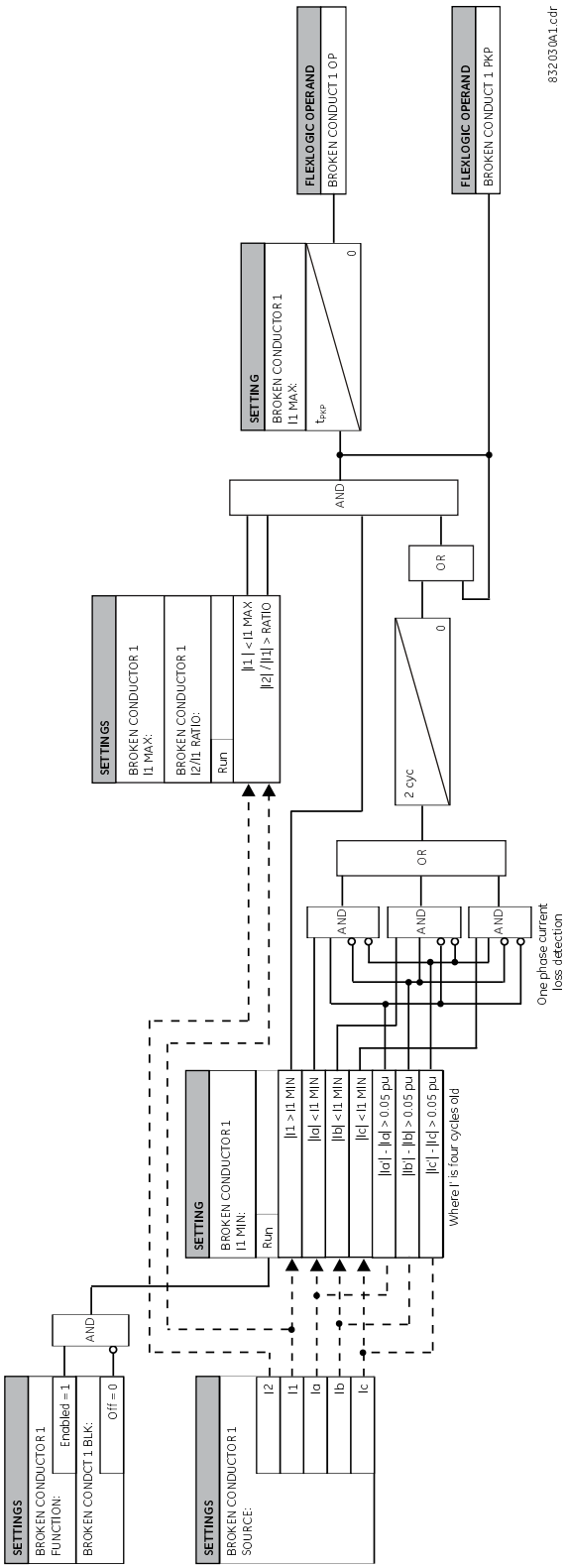

Figure 383: Broken conductor detection logic

9.9.11 HARMONIC DETECTION

Setting path: ***SETTINGS > CONTROL ELEMENTS > MONITORING ELEMENTS > HARMONIC DETECTION > HARMONIC DET 1(6)***

Note:
Only Harmonic Detection 1 is shown

■ HARMONIC DET 1 ■	⇔	HARMONIC DET 1 FUNCTION: Disabled	Range: Disabled, Enabled
	⇕	HARMONIC DET 1 SOURCE: SRC 1	Range: SRC <n>
	⇕	HARMONIC DET 1 OP QTY: CURRENT	Range: Current, Voltage
	⇕	HARMONIC DET 1 HARMONIC: 2nd	Range: DC, 2nd, 3rd, 4th, 5th, THD
	⇕	HARMONIC DET 1 MIN PHS PKP: 0.2 pu	Range: 0.1 to 1.0 pu in steps of 0.01
	⇕	HARMONIC DET 1 MAX PHS PKP: 5.0 pu	Range: 1.0 to 30 pu in steps of 0.01
	⇕	HARMONIC DET 1 PHASE FOR OPER: ANY ONE	Range: ANY ONE, ANY TWO, ALL THREE, AVERAGE
	⇕	HARMONIC DET 1 PHS PICKUP: 20%	Range: 2.0 to 100% in steps of 0.1
	⇕	HARMONIC DET 1 MIN GND PKP: 0.2 pu	Range: 0.1 to 1.0 pu in steps of 0.01
	⇕	HARMONIC DET 1 MAX GND PKP: 1.0 pu	Range: 1.0 to 30 pu in steps of 0.01
	⇕	HARMONIC DET 1 GND PICKUP: 20%	Range: 0.1 to 100% in steps of 0.1
	⇕	HARMONIC DET 1 PKP DELAY: 0 s	Range: 0.00 to 600 s in steps of 0.01
	⇕	HARMONIC DET 1 BLK: Off	Range: Off, On, FlexLogic operand
	⇕	HARMONIC DET 1 TARGET: Self-reset	Range: Self-reset, Latched, Disabled
	⇑	HARMONIC DET 1: EVENTS: Disabled	Range: Disabled, Enabled

Transformer energization, voltage recovery following a clearance of external faults, startup or shutdown of generators connected to transformers, or following a load injection can cause excessive magnetizing inrush current. The nature of the magnetizing inrush current contains significant harmonics. The fundamental magnitude of this magnetizing inrush current can be several times of the rated transformer overload current. Depending on the sensitivity of the feeder or line overcurrent protection elements, magnetizing inrush current can cause an undesired operation on these overcurrent protection elements.

In addition, DC offset can cause saturation in current transformers as well as in the input current transformers of protective relays and can also result in undesired operation on some sensitive protection elements, such as differential protection, restricted earth fault protection, or sequence overcurrent protection elements.

The Harmonic Detection element monitors one of the selected quantities, including DC offset, 2nd to 5th harmonic, or Total Harmonics Distortion (THD), that are present in the phase currents, ground current, phase voltages and auxiliary voltage. It adds delay or blocking to prevent undesired operation. Harmonics are calculated and presented as a percent value relative to the fundamental frequency phasor magnitude.

Note:
When the output of this element is used for blocking protection functions, apply it directly (combination with other FlexLogic operands adds delay to the blocking).

Note:
*Depending on the **HARMONIC DET 1 OP QTY** setting, the operands are activated either by current harmonics or voltage harmonics.*

HARMONIC DET 1 FUNCTION

This setting enables and disables the Harmonic Detection element.

HARMONIC DET 1 SOURCE

This setting indicates the signal source for this element. The selected source must have signals configured for each ***HARMONIC DET 1 OP QTY*** setting shown below.

Note:
Voltage harmonics are calculated only for Wye-connected phase VTs and for phase-to-ground voltages in the auxiliary voltage channel.

Note:
Fundamental frequency voltage phasors are estimated using full-cycle Fourier

HARMONIC DET 1 OP QTY:

This setting selects the voltages or currents from the assigned source as the operating quantity that will be used for harmonic detection. If `Current` is selected, currents are taken from 3 phase CT bank and from the ground channel. If `Voltage` is selected, voltages are taken from 3 phase VT bank and from the auxiliary voltage channel.

HARMONIC DET 1 HARMONIC

This setting selects DC, harmonic (2nd to 5th), or THD as the input quantity to be compared against the pickup threshold in this element. Note that DC, harmonic, and THD are expressed in percent relative to the fundamental magnitude. This setting applies to all four channels of the selected source and selected operating quantity. If detection of another harmonic is required, then set up a separate Harmonic Detection element.

This setting applies to all four channels of the selected source, if detection of another harmonic is required, then set up a separate Harmonic Detection element.

HARMONIC DET 1 MIN PHS PKP

This setting defines the minimum fundamental frequency current or voltage phasor magnitude required to allow the respective (phase) logic in the harmonic detection element to operate.

HARMONIC DET 1 MAX PHS PKP

This setting defines the maximum fundamental frequency current or voltage phasor magnitude of the phases above which the harmonic detection phase output is inhibited.

HARMONIC DET 1 PHASE FOR OPER

This setting defines the phases required for assertion of the HARMONIC DET 1 OP operand (except ground channel). Options are as follows:

- ANY ONE: At least one phase picked up (DEFAULT)
- ANY TWO: Two or more phases picked up
- ALL THREE: All three phases picked up
- AVERAGE: The average of three-phase harmonics or THDs picked up

If set to AVERAGE, the relay calculates the average level of the selected harmonic and compares this level against the pickup setting. Averaging of the selected harmonic follows an adaptive algorithm depending on the fundamental current magnitude per-phase. If the fundamental magnitude on any of the three phases falls outside of the defined range based on the MIN PHS PKP and the MAX PHS PKP settings, the selected harmonic current or voltage from that phase is dropped (zeroed) from the equation for averaging, and the divider is decreased from 3 to 2. The same happens if the magnitude of the fundamental phasor on one of the remaining two phases falls out of the defined range based on the MIN PHS PKP and MAX PHS PKP settings. In this case, the selected harmonic on this phase is dropped from summation, and the divider is decreased to 1.

HARMONIC DET 1 PHS PICKUP

This setting defines the pickup setting for the phase harmonic detection comparator of this element.

HARMONIC DET 1 MIN GND PKP

This setting defines the minimum fundamental frequency ground current or auxiliary voltage phasor magnitude required to allow the respective (ground) logic in this harmonic detection element to operate.

HARMONIC DET 1 MAX GND PKP

This setting defines the maximum fundamental frequency ground current or auxiliary voltage phasor magnitude above which the harmonic detection ground output is inhibited.

HARMONIC DET 1 GND PICKUP

This setting defines the pickup setting for ground harmonic detection comparator of this element.

The ground harmonic detection comparator of this element is connected to the ground channel of a CT module or auxiliary voltage channel based on the setting ***HARMONIC DET 1 OP QTY***. For standard channels, the conversion range is from 0.02 to 46 times the CT rating. For sensitive channels (sensitive ground CT types), the conversion range is from 0.002 to 4.6 times the CT rating.

HARMONIC DET 1 PKP DELAY

This setting defines the pickup delay setting for this element.

HARMONIC DET 1 BLK

Assertion of the operand assigned to this setting blocks operation of the Harmonic Detection element.

HARMONIC DET 1 EVENTS

This setting enables and disables the logging of Harmonic Detection events in the event recorder.

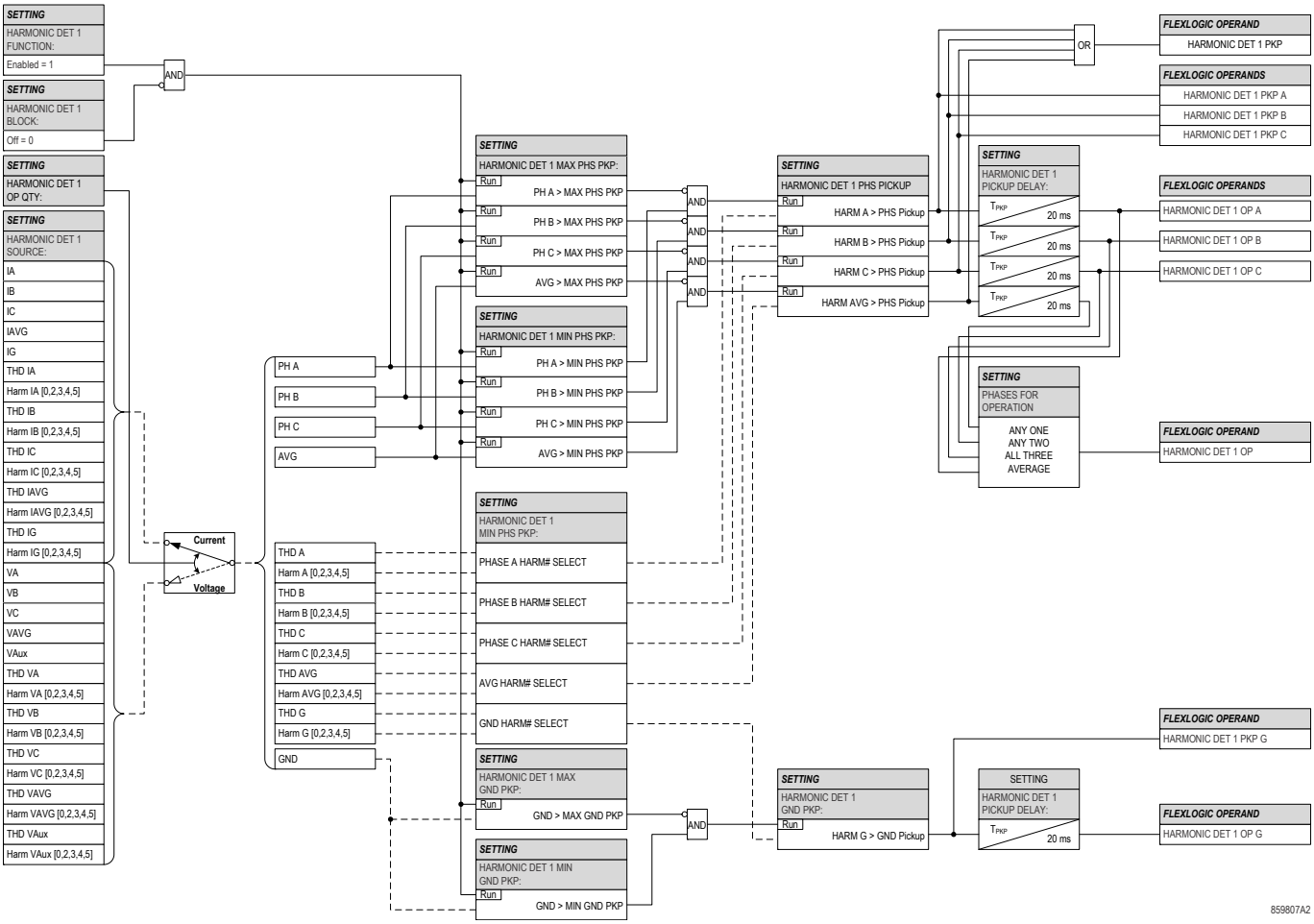

Figure 384: Harmonic detection logic

9.10 INPUTS/OUTPUTS

9.10.1 CONTACT INPUTS

Setting path: ***SETTINGS > INPUTS / OUTPUTS > CONTACT INPUTS***

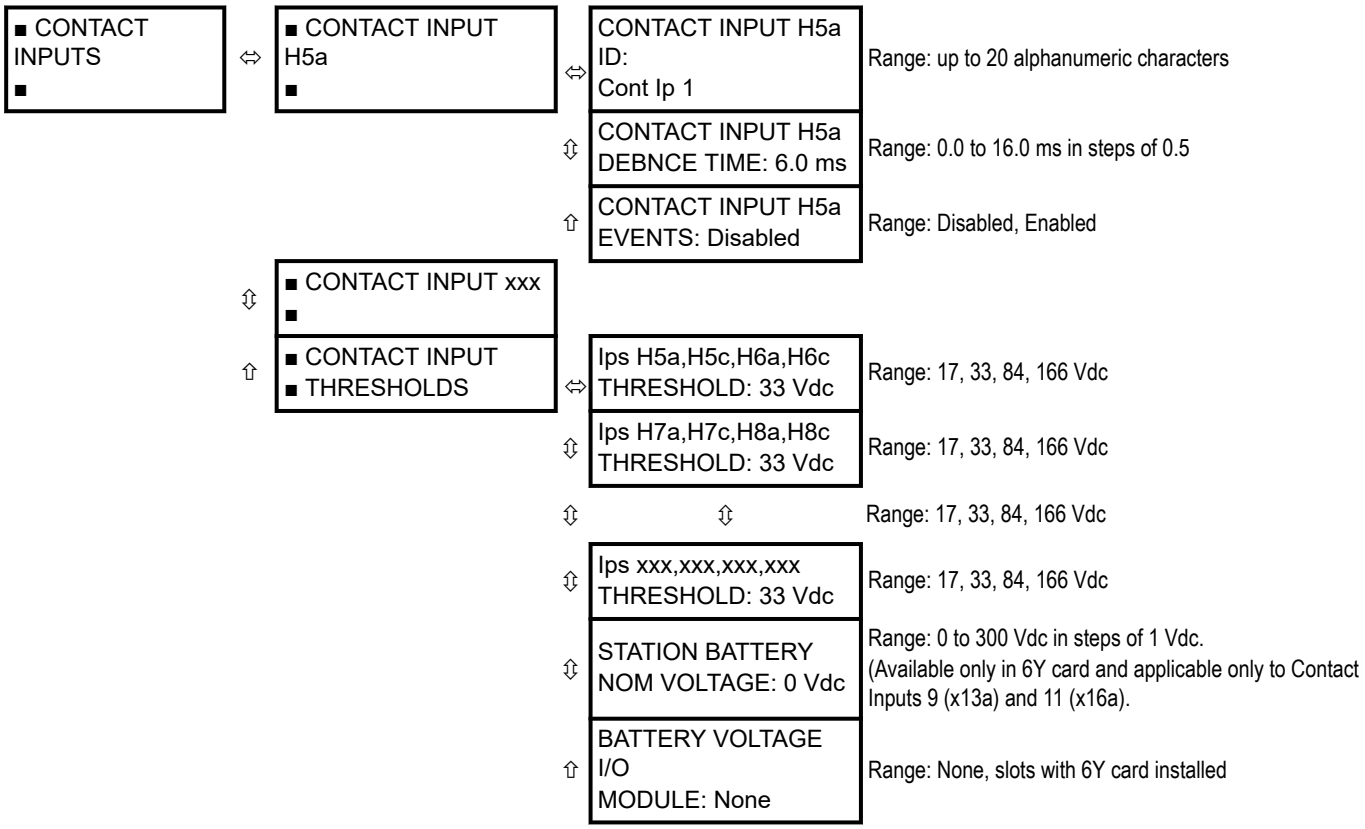

Contact inputs and outputs are digital signals associated with connections to hard-wired contacts. Wet and dry contacts are supported.

The contact inputs menu contains configuration settings for each contact input as well as voltage thresholds for each group of two, four and five contact inputs. Upon startup, the relay processor determines (from an assessment of the installed modules) which contact inputs are available and then display settings for only those inputs.

An alphanumeric ID can be assigned to a contact input for diagnostic, setting, and event recording purposes. The CONTACT IP X On (Logic 1) FlexLogic operand corresponds to contact input X being closed, while CONTACT IP X Off corresponds to contact input “X” being open. The ***CONTACT INPUT DEBNCE TIME*** setting defines the time required for the contact to overcome ‘contact bouncing’ conditions. As this time differs for different contact types and manufacturers, set it as a maximum contact debounce time (per manufacturer specifications) plus some margin to ensure proper operation. If ***CONTACT INPUT EVENTS*** is enabled, every change in the contact input state triggers an event.

A raw status is scanned for all Contact Inputs synchronously at the constant rate of 0.5 ms as shown in the following figure. The DC input voltage is compared to a user-settable threshold. A new contact input state must be maintained for a user-settable debounce time in order for the Product to validate the new contact state. In the following figure, the debounce time is set at 2.5 ms; thus the 6th sample in a row validates the change of state (mark no. 1 in the diagram). Once validated (de-bounced), the contact input asserts a corresponding FlexLogic operand and logs an event as per user setting.

A time stamp of the first sample in the sequence that validates the new state is used when logging the change of the contact input into the Event Recorder (mark no. 2 in the figure).

Protection and control elements, as well as FlexLogic equations and timers, are executed eight times in a power system cycle. The protection pass duration is controlled by the frequency tracking mechanism. The FlexLogic operand reflecting the debounced state of the contact is updated at the protection pass following the validation (marks no. 3 and 4 on the figure that follows). The update is performed at the beginning of the protection pass so all protection and control functions, as well as FlexLogic equations, are fed with the updated states of the contact inputs.

The FlexLogic operand response time to the contact input change is equal to the debounce time setting plus up to one protection pass (variable and depending on system frequency if frequency tracking enabled). If the change of state occurs just after a protection pass, the recognition is delayed until the subsequent protection pass; that is, by the entire duration of the protection pass. If the change occurs just prior to a protection pass, the state is recognized immediately. Statistically a delay of half the protection pass is expected. Owing to the 0.5 ms scan rate, the time resolution for the input contact is below 1 ms.

For example, eight protection passes per cycle on a 60 Hz system correspond to a protection pass every 2.1 ms. With a contact debounce time setting of 3.0 ms, the FlexLogic operand-assert time limits are: 3.0 + 0.0 = 3.0 ms and 3.0 + 2.1 = 5.1 ms. These time limits depend on how soon the protection pass runs after the debouncing time.

Regardless of the contact debounce time setting, the contact input event is time-stamped with a 1 ms accuracy using the time of the first scan corresponding to the new state (mark no. 2 shown). Therefore, the time stamp reflects a change in the DC voltage across the contact input terminals that was not accidental as it was subsequently validated using the debounce timer. Keep in mind that the associated FlexLogic operand is asserted/de-asserted later, after validating the change.

The debounce algorithm is symmetrical: the same procedure and debounce time are used to filter the LOW-HIGH (marks no.1, 2, 3, and 4 in the figure) and HIGH-LOW (marks no. 5, 6, 7, and 8) transitions.

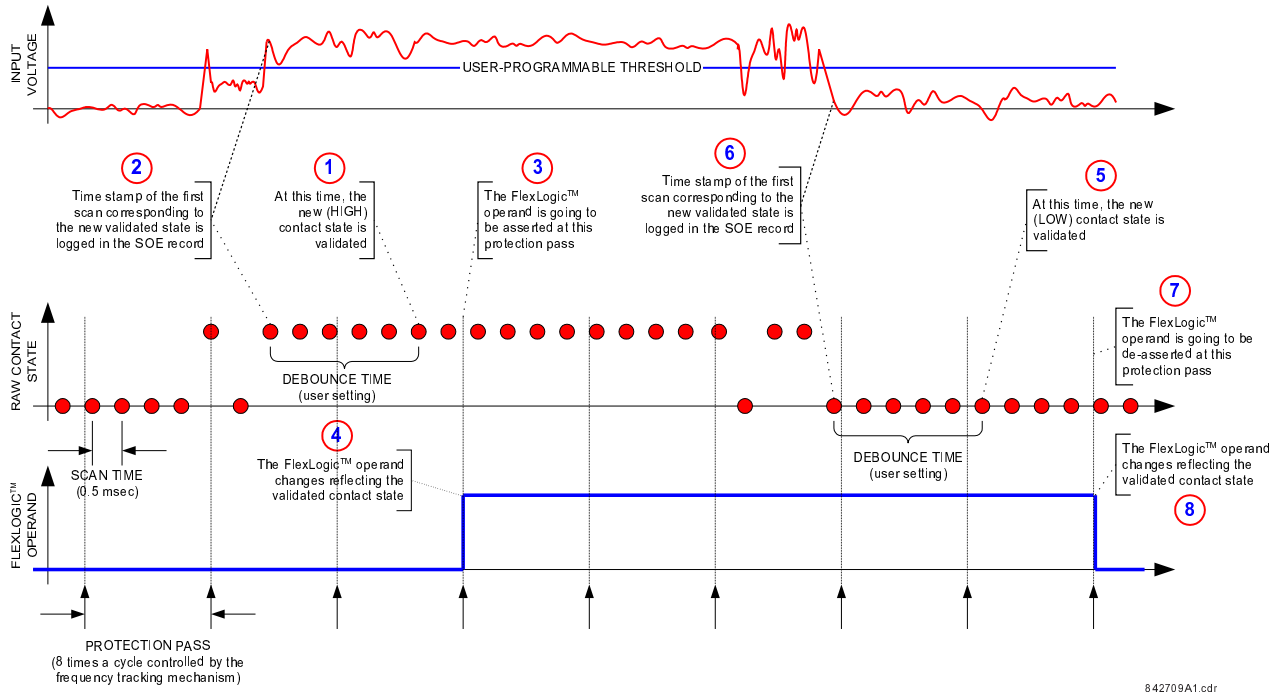

Figure 385: Input contact debouncing mechanism and time stamp sample timing

The contact inputs are grouped with a common return. They are isolated in groups of four to allow connection of wet contacts from different voltage sources for each group.

The ***CONTACT INPUT THRESHOLDS*** determine the minimum voltage required to detect a closed contact input. This value is selected according to the following criteria: 17 for 24 V sources, 33 for 48 V sources, 84 for 110 to 125 V sources and 166 for 250 V sources.

For example, to use contact input H5a as a status input from the breaker 52b contact to seal-in the trip relay and record it in the Event Records menu, make the following settings changes:

- ***CONTACT INPUT H5a ID***: `Breaker Closed (52b)`
- ***CONTACT INPUT H5a EVENTS***: `Enabled`

> *Note:*
> *The 52b contact is closed when the breaker is open and open when the breaker is closed.*

The setting ***STATION BATTERY NOM VOLTAGE*** is applicable to 6Y cards only. A 6Y card provides an additional function for station battery voltage measurement through contact inputs 9 (x13a) and 11 (x16a). To measure this DC battery voltage, you:

1. set the ***STATION BATTERY NOM VOLTAGE*** setting to the nominal voltage of the station battery
2. connect the positive terminal of the station battery directly to the Contact Input 9 or 11
3. connect the negative terminal to the common return.

The measured DC voltage is available as the Flexanalogs Battery DC Volt1 / Battery DC Volt2.

Logic for monitoring the station battery voltage can be designed using Flexelements which use a per unit value of the measured voltage. The setting ***STATION BATTERY NOM VOLTAGE*** is used as base for converting the measured DC voltage to a per unit value. If the setting ***STATION BATTERY NOM VOLTAGE*** is set to 0 Vdc, then the station battery DC voltage measurement functionality is not available and the Contact Inputs work as regular contact inputs. The Flexanalog Battery DC Volt1 / Battery DC Volt2 would read 0.

The ***BATTERY VOLTAGE I/O MODULE*** setting is applicable only to the 6Y card. It uses the contacts inputs 9 and 11 for the station battery DC voltage measurement.

It should be noted that when contact inputs 9 (x13a) and 11 (x16a) are used for DC voltage measurement, the contact inputs 10 (x15a) and 12 (x18a) could still be used as regular contact inputs, but the ***CONTACT INPUT THRESHOLD*** settings for contact inputs 10 (x15a) and 12 (x18a) are forced to a certain value (out of 17, 33, 84, 166 Vdc) as shown in the table below. For example, if ***STATION BATTERY NOM VOLTAGE*** is set as `250 Vdc` and ***BATTERY VOLTAGE I/O MODULE*** is set to H, then the settings ***Ips H13a,H15a THRESHOLD*** and ***Ips H16a,H18a THRESHOLD*** automatically become `166Vdc`.

The following table shows the ***CI THRESHOLD*** setting for Contact Inputs 9-10 and 11-12 of 6Y card based on the setting ***STATION BATTERY NOM VOLTAGE*** (when using the voltage monitoring functionality)

Range of the setting STATION BATTERY NOM VOLTAGE	Applicable CI THRESHOLD setting for Contact Inputs 9-10 and 11-12 of 6Y card
Below 30V	17V
30V to 60V	33V
60V to 150V	84V
150V to 300V	166V

9.10.2 VIRTUAL INPUTS

Setting path: ***SETTINGS > INPUTS/OUTPUTS > VIRTUAL INPUTS > VIRTUAL INPUT 1(128)***

> *Note:*
> *Only Virtual input 1 is shown*

■ VIRTUAL INPUT 1 ■	⇔	VIRTUAL INPUT 1 FUNCTION: Disabled	Range: Disabled, Enabled

⇕	VIRTUAL INPUT 1 ID: Virt Ip 1	Range: up to 20 alphanumeric characters
⇕	VIRTUAL INPUT 1 TYPE: Latched	Range: Self-Reset, Latched
⇧	VIRTUAL INPUT 1 EVENTS: Disabled	Range: Disabled, Enabled

The virtual inputs and outputs are digital signals associated with UR-series internal logic signals. Virtual inputs include signals generated by the local user interface. The virtual outputs are outputs of FlexLogic equations used to customize the device. Virtual outputs can also serve as virtual inputs to FlexLogic equations.

The virtual inputs can be individually programmed to respond to input signals from the keypad (via the ***COMMANDS*** menu) and communications protocols. All virtual input operands are defaulted to `Off` (logic 0) unless the appropriate input signal is received.

If the ***VIRTUAL INPUT x FUNCTION*** is to `Disabled`, the input is forced to off (logic 0) regardless of any attempt to alter the input. If enabled, the input operates as shown on the logic diagram and generates output FlexLogic operands in response to received input signals and the applied settings.

There are two types of operation: self-reset and latched. If ***VIRTUAL INPUT x TYPE*** is `Self-Reset`, when the input signal transits from off to on, the output operand is set to on for only one evaluation of the FlexLogic equations and then return to off. If set to `Latched`, the virtual input sets the state of the output operand to the same state as the most recent received input.

The self-reset operating mode generates the output operand for a single evaluation of the FlexLogic equations. If the operand is to be used anywhere other than internally in a FlexLogic equation, it likely needs to be lengthened in time. A FlexLogic timer with a delayed reset can perform this function.

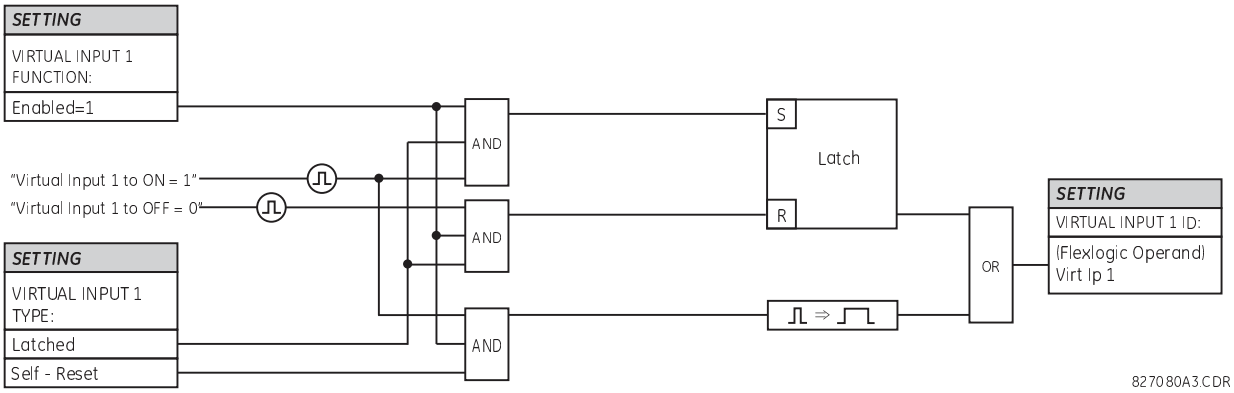

Figure 386: Virtual inputs logic

9.10.3 CONTACT OUTPUTS

9.10.3.1 NON-LATCHING CONTACT OUTPUTS (H)

Setting path: ***SETTINGS > INPUTS/OUTPUTS > CONTACT OUTPUTS > CONTACT OUTPUT H1(H72)***

> *Note:*
> *Only Contact output H1 is shown*

■ CONTACT OUTPUT H1 ■	⇔	CONTACT OUTPUT H1 ID Cont Op 1	Range: up to 20 alphanumeric characters: Disabled, Enabled

⇕	OUTPUT H1 OPERATE: Off	Range: FlexLogic operand
⇕	OUTPUT H1 SEAL-IN: Off	Range: FlexLogic operand
⇑	CONTACT OUTPUT H1 EVENTS: Enabled	Range: FlexLogic operand

A contact output is a digital signals associated with connections to hard-wired contacts. Wet and dry contacts are supported.

Upon startup of the relay, the main processor determines from an assessment of the modules installed in the chassis which contact outputs are available and then presents the settings for only these outputs. Where the contact input is non-latching, the settings are as shown.

An ID can be assigned to each contact output. The signal that can OPERATE a contact output can be any FlexLogic operand (virtual output, element state, contact input, or virtual input). An additional FlexLogic operand can be used to SEAL-IN the relay. Any change of state of a contact output can be logged as an Event if programmed to do so.

For example, the trip circuit current is monitored by providing a current threshold detector in series with some Form-A contacts (see the trip circuit example in the Digital Elements section). The monitor sets a flag (see the specifications for Form-A). The name of the FlexLogic operand set by the monitor, consists of the output relay designation, followed by the name of the flag; for example, Cont OP 1 IOn.

In most breaker control circuits, the trip coil is connected in series with a breaker auxiliary contact used to interrupt current flow after the breaker has tripped, to prevent damage to the less robust initiating contact. This can be done by monitoring an auxiliary contact on the breaker which opens when the breaker has tripped, but this scheme is subject to incorrect operation caused by differences in timing between breaker auxiliary contact change-of-state and interruption of current in the trip circuit. The most dependable protection of the initiating contact is provided by directly measuring current in the tripping circuit, and using this parameter to control resetting of the initiating relay. This scheme is often called trip seal-in.

This can be realized using the Cont OP 1 IOn FlexLogic operand to seal-in the contact output as follows:

- ***CONTACT OUTPUT H1 ID***: Cont Op 1
- ***OUTPUT H1 OPERATE***: any suitable FlexLogic operand
- ***OUTPUT H1 SEAL-IN***: Cont Op 1 IOn
- ***CONTACT OUTPUT H1 EVENTS: Enabled***

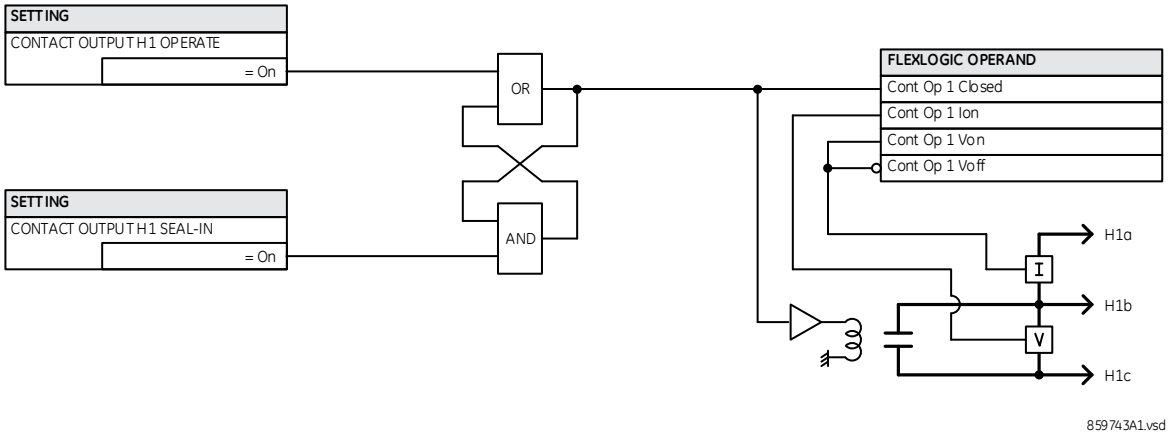

Figure 387: Contact input/output module type 6A contact 1 logic

9.10.3.2 LATCHING CONTACT OUTPUTS

Setting path: ***SETTINGS > INPUTS/OUTPUTS > CONTACT OUTPUTS > CONTACT OUTPUT H1a***

> *Note:*
> *Only Contact output H1a is shown*

■ CONTACT OUTPUT H1a ■	⇔	CONTACT OUTPUT H1a ID Cont Op 1	Range: up to 20 alphanumeric characters: Disabled, Enabled
	⇕	OUTPUT H1a OPERATE: Off	Range: FlexLogic operand
	⇕	OUTPUT H1a RESET: Off	Range: FlexLogic operand
	⇕	OUTPUT H1a SEAL-IN: Off	Range: FlexLogic operand
	⇕	OUTPUT H1a TYPE: Operate-dominant	Range: Operate-dominant, Reset-dominant
	⇧	CONTACT OUTPUT H1a EVENTS: Enabled	Range: FlexLogic operand

The latching output contacts are mechanically bi-stable and controlled by two separate (open and close) coils. As such they retain their position even if the relay is not powered up. The relay recognizes all latching output contact cards and populates the setting menu accordingly. On power up, the relay reads positions of the latching contacts from the hardware before executing any other functions of the relay (such as protection and control features or FlexLogic).

The latching output modules, either as part of the relay or as individual modules, are shipped from the factory with all latching contacts open. It is highly recommended to double-check the programming and positions of the latching contacts when replacing a module.

Since the relay asserts the output contact and reads back its position, it is possible to incorporate self-monitoring capabilities for the latching outputs. If any latching outputs exhibits a discrepancy, the LATCHING OUTPUT ERROR self-test error is declared. The error is signaled by the LATCHING OUT ERROR FlexLogic operand, event, and target message.

The settings shown use H1a as an example. The menu varies; not all fields shown display.

OUTPUT H1a OPERATE

This setting specifies a FlexLogic operand to operate the *Close Coil* of the contact. The relay seals-in this input to safely close the contact. Once the contact is closed and the ***RESET*** input is logic 0 (off), any activity of the ***OPERATE*** input, such as subsequent chattering, does not have any effect. With both the ***OPERATE*** and ***RESET*** inputs active (logic 1), the response of the latching contact is specified by the ***OUTPUT H1a TYPE*** setting.

OUTPUT H1a RESET or SEAL-IN

This setting specifies a FlexLogic operand to operate the *Trip Coil* of the contact. The relay seals-in this input to safely open the contact. Once the contact is opened and the ***OPERATE*** input is logic 0 (off), any activity of the ***RESET*** input, such as subsequent chattering, does not have any effect. With both the ***OPERATE*** and ***RESET*** inputs active (logic 1), the response of the latching contact is specified by the OUTPUT H1a TYPE setting.

OUTPUT H1a TYPE

This setting specifies the contact response under conflicting control inputs; that is, when both the ***OPERATE*** and ***RESET*** signals are applied. With both control inputs applied simultaneously, the contact closes if set to `Operate-dominant` and opens if set to `Reset-dominant`.

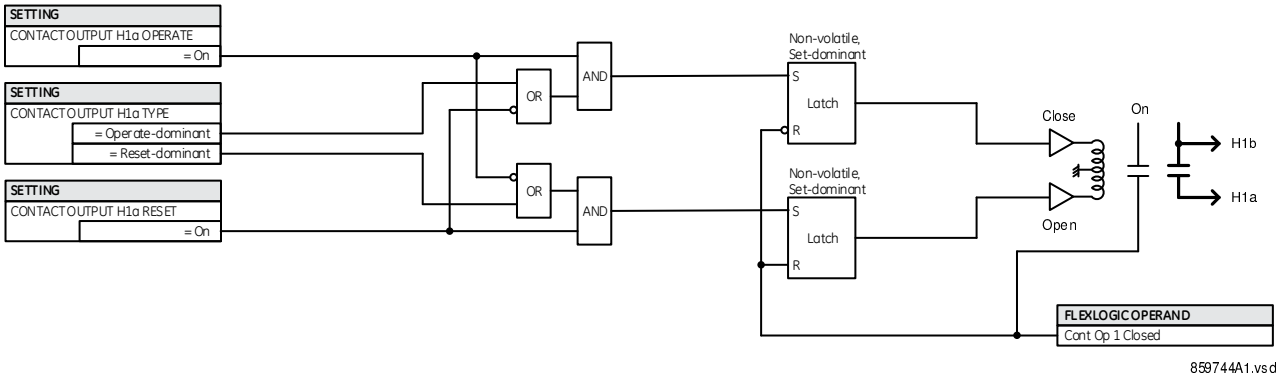

Figure 388: Contact input/output module type 4L contact 1 logic

Application example 1

A latching output contact H1a is to be controlled from two user-programmable pushbuttons (buttons number 1 and 2). The following settings are applied.

Program the Latching Outputs by making the following changes in the ***SETTINGS > INPUTS/OUTPUTS > CONTACT OUTPUTS > CONTACT OUTPUT H1a*** menu (assuming an H4L module):

- ***OUTPUT H1a OPERATE:*** `PUSHBUTTON 1 ON`
- ***OUTPUT H1a RESET***: `PUSHBUTTON 2 ON`

Program the pushbuttons by making the following changes in the ***PRODUCT SETUP > USER-PROGRAMMABLE PUSHBUTTONS > USER PUSHBUTTON 1*** and ***USER PUSHBUTTON 2*** menus:

- ***PUSHBUTTON 1 FUNCTION***: `Self-reset`
- ***PUSHBTN 1 DROP-OUT TIME***: `0.00 s`
- ***PUSHBUTTON 2 FUNCTION***: `Self-reset`
- ***PUSHBTN 2 DROP-OUT TIME***: `0.00 s`

Application example 2

A relay, having two latching contacts H1a and H1c, is to be programmed. The H1a contact is to be a Type-a contact, while the H1c contact is to be a Type-b contact (Type-a means closed after exercising the operate input; Type-b means closed after exercising the reset input). The relay is to be controlled from virtual outputs: VO1 to operate and VO2 to reset.

Program the Latching Outputs by making the following changes in the ***SETTINGS > INPUTS/OUTPUTS > CONTACT OUTPUTS > CONTACT OUTPUT H1a*** and ***CONTACT OUTPUT H1c*** menus (assuming an H4L module):

- ***OUTPUT H1a OPERATE***: `VO1`
- ***OUTPUT H1a RESET***: `VO2`
- ***OUTPUT H1c OPERATE***: `VO2`
- ***OUTPUT H1c RESET***: `VO1`

Since the two physical contacts in this example are mechanically separated and have individual control inputs, they do not operate at exactly the same time. A discrepancy in the range of a fraction of a maximum operating time can occur. Therefore, a pair of contacts programmed to be a multi-contact relay do not guarantee any specific sequence

of operation (such as make before break). If required, the sequence of operation must be programmed explicitly by delaying some of the control inputs as shown in the next application example.

Application example 3

A make before break functionality must be added to the preceding example. An overlap of 20 ms is required to implement this functionality.

Write the following FlexLogic equation (EnerVista example shown)

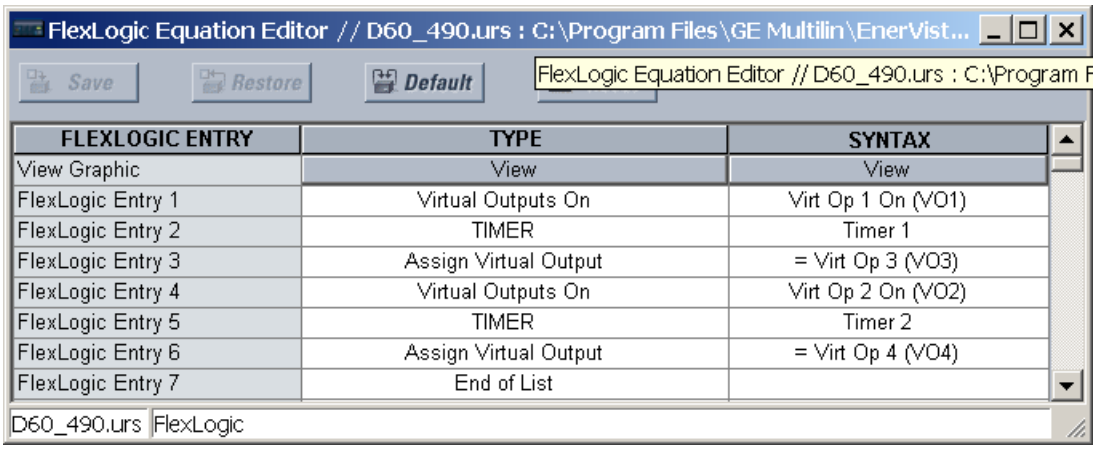

FLEXLOGIC ENTRY	TYPE	SYNTAX
View Graphic	View	View
FlexLogic Entry 1	Virtual Outputs On	Virt Op 1 On (VO1)
FlexLogic Entry 2	TIMER	Timer 1
FlexLogic Entry 3	Assign Virtual Output	= Virt Op 3 (VO3)
FlexLogic Entry 4	Virtual Outputs On	Virt Op 2 On (VO2)
FlexLogic Entry 5	TIMER	Timer 2
FlexLogic Entry 6	Assign Virtual Output	= Virt Op 4 (VO4)
FlexLogic Entry 7	End of List	

Figure 389: Flexlogic settings for Application example 3

Set both timers (Timer 1 and Timer 2) to 20 ms pickup and 0 ms dropout.

Program the Latching Outputs by making the following changes in the ***SETTINGS > INPUTS/OUTPUTS > CONTACT OUTPUTS > CONTACT OUTPUT H1a*** and ***CONTACT OUTPUT H1c*** menus (assuming an H4L module):

- ***OUTPUT H1a OPERATE***: `VO1`
- ***OUTPUT H1a RESET***: `VO4`
- ***OUTPUT H1c OPERATE***: `VO2`
- ***OUTPUT H1c RESET***: `VO3`

Application example 4

A latching contact H1a is to be controlled from a single virtual output VO1. The contact is to remain closed as long as VO1 is high, and is to remain opened when VO1 is low. Program the relay as follows.

Write the following FlexLogic equation (EnerVista example shown).

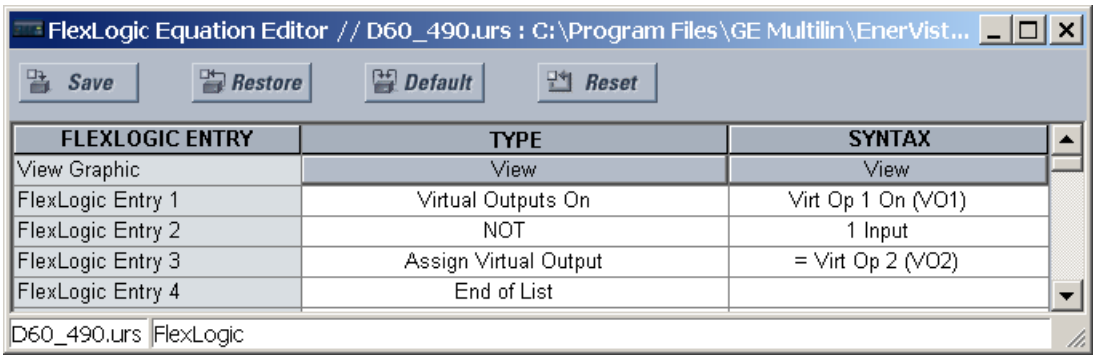

FLEXLOGIC ENTRY	TYPE	SYNTAX
View Graphic	View	View
FlexLogic Entry 1	Virtual Outputs On	Virt Op 1 On (VO1)
FlexLogic Entry 2	NOT	1 Input
FlexLogic Entry 3	Assign Virtual Output	= Virt Op 2 (VO2)
FlexLogic Entry 4	End of List	

Figure 390: Flexlogic settings for Application example 4

Program the Latching Outputs by making the following changes in the ***SETTINGS > INPUTS/OUTPUTS > CONTACT OUTPUTS > CONTACT OUTPUT H1a*** menu (assuming an H4L module):

- ***OUTPUT H1a OPERATE***: `VO1`
- ***OUTPUT H1a RESET***: `VO2`

9.10.4 VIRTUAL OUTPUTS

Setting path: ***SETTINGS > INPUTS/OUTPUTS > VIRTUAL OUTPUTS > VIRTUAL OUTPUT 1(256)***

> *Note:*
> *Only Virtual output 1 is shown*

■ VIRTUAL OUTPUT 1 ■	⇔	VIRTUAL OUTPUT 1 ID: Virt Op 1	Range: up to 20 alphanumeric characters
	⇧	VIRTUAL OUTPUT 1 EVENTS: Disabled	Range: Disabled, Enabled

The virtual inputs and outputs are digital signals associated with UR-series internal logic signals. Virtual inputs include signals generated by the local user interface. The virtual outputs are outputs of FlexLogic equations used to customize the device. Virtual outputs can also serve as virtual inputs to FlexLogic equations.

The virtual outputs can be assigned using FlexLogic. If not assigned, the output is forced to ‘OFF’ (Logic 0). An ID also can be assigned to each virtual output. Virtual outputs are resolved in each pass through the evaluation of the FlexLogic equations. Any change of state of a virtual output can be logged as an event if programmed to do so.

For example, if Virtual Output 1 is the trip signal from FlexLogic and the trip relay is used to signal events, the settings is programmed as follows:

- ***VIRTUAL OUTPUT 1 ID***: `Trip`
- ***VIRTUAL OUTPUT 1 EVENTS***: `Disabled`

9.10.5 RESETTING

Enhanced and basic front panels

SETTINGS > INPUTS/OUTPUTS > RESETTING

■ RESETTING ■	⇔	RESET OPERAND: Off	Range: FlexLogic operand

Graphical front panel

SETTINGS > INPUTS/OUTPUTS > RESETTING

■ RESETTING ■	⇔	RESET OPERAND: Off	Range: FlexLogic operand
	⇩	RESET ANNUNCIATOR: Off	Range: FlexLogic operand

Some events can be programmed to latch the front panel LED event indicators, target messages, and/or graphical front panel annunciator windows. Once set, the latching mechanism holds the latched indicators, messages, or

windows in the set state after the initiating condition has cleared until a ***RESET*** command is received to return these latches (not including FlexLogic latches) to the reset state where the initiating condition has cleared. The ***RESET*** command can be sent from the front panel ***RESET*** button, a remote device via a communications channel, or any selected operand. The Modbus execute function 05h with operation code 1 command is also available to perform the same function as the front panel ***RESET*** key.

RESET OPERAND

The three sources of ***RESET*** commands each activates the RESET OP FlexLogic operand. Each individual source of a ***RESET*** command also activates its individual operand RESET OP (PUSHBUTTON), RESET OP (COMMS), or RESET OP (OPERAND) to identify the source of the command. Each of these three operands generates an event in the event record when activated. The ***RESET OPERAND*** setting here selects the operand that activates the RESET OP (OPERAND) operand.

RESET ANNUNCIATOR

Used to select a FlexLogic operand that when activated acknowledges/resets all annunciator windows on the graphical front panel. The other methods to acknowledge/reset annunciator windows include:

- On the displayed page, press the ***RESET*** pushbutton with none of the annunciator windows selected to acknowledge/reset all annunciator windows on that page
- To acknowledge/reset a specific annunciator window, use the Up, Down, Left and Right pushbuttons to select the window, and press the ***RESET*** or ***ENTER*** pushbutton
- All annunciator windows can be reset remotely by programming a Virtual Input (for example Virtual Input 1) as the input to the RESET ANNUNCIATOR setting. Then the Modbus execute function 05h with operation code 1000h command (or function 10h with address 400h) is used to set the state of Virtual Input 1.

For the ***RESET ANNUNCIATOR*** setting, the RESET ANCTR OP FlexLogic operand is activated by the two sources of ***RESET*** command, operand source and manual source. Each individual source of a ***RESET ANNUNCIATOR*** command also activates its individual operand RESET OP (OPRD) or RESET ANCTR OP (MNUL) to identify the source of the command. Each of these two operands generates an event in the event record when activated. The setting here selects the operand that activates the RESET ANCTR OP (OPRD) operand. The ***RESET*** pushbutton on the front panel or the reset command from the software activates the RESET ANCTR OP (MNUL) operand.

9.10.6 DIRECT INPUTS AND OUTPUTS

9.10.6.1 DIRECT INPUTS

Setting path: ***SETTINGS > INPUTS/OUTPUTS > DIRECT INPUTS > DIRECT INPUT <n>***

■ DIRECT INPUT 1 ■	⇔	DIRECT INPUT 1 NAME: Dir Ip 1	Range: up to 12 alphanumeric characters
	⇕	DIRECT INPUT 1 DEVICE ID: 0	Range: 0 to 16
	⇕	DIRECT INPUT 1 BIT NUMBER: 0	Range: 0 to 32 Range: 0 to 96 (C30, N60) Range: 0 to 256 (B90)
	⇕	DIRECT INPUT 1 DEFAULT: Off	Range: On, Off, Latest/On, Latest/Off
	⇧	DIRECT INPUT 1 EVENTS: Disabled	Range: Enabled, Disabled

These settings specify how the direct input information is processed.

DIRECT INPUT 1 NAME

This setting allows the user to assign a descriptive name to the direct input.

DIRECT INPUT 1 DEVICE ID

Represents the source of direct input 1. The specified direct input is driven by the device identified here.

DIRECT INPUT 1 BIT NUMBER

The bit number to extract the state for direct input 1. Direct Input 1 is driven by the bit identified as ***DIRECT INPUT 1 BIT NUMBER***. This corresponds to the direct output number of the sending device.

DIRECT INPUT 1 DEFAULT STATE

Represents the state of the direct input when the associated direct device is offline. The following choices are available:

- On — Defaults the input to Logic 1
- Off — Defaults the input to Logic 0
- Latest/On — Freezes the input in case of lost communications. When the latest state is not known, such as after relay power-up but before the first communication exchange, the input defaults to Logic 1. When communication resumes, the input becomes fully operational.
- Latest/Off — Freezes the input in case of lost communications. When the latest state is not known, such as after relay power-up but before the first communication exchange, the input defaults to Logic 0. When communication resumes, the input becomes fully operational.

9.10.6.2 DIRECT OUTPUTS

Setting path: ***SETTINGS > INPUTS/OUTPUTS > DIRECT OUTPUTS> DIRECT OUTPUTS***

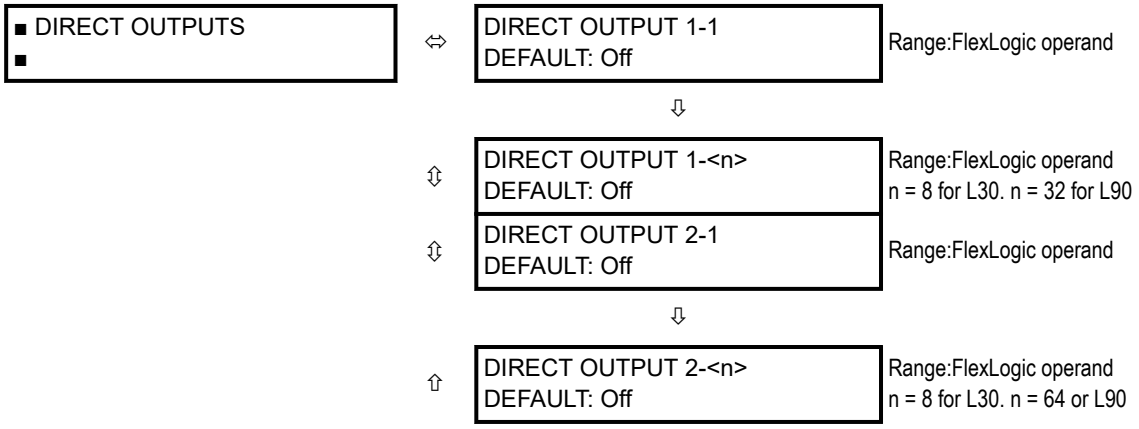

different stuff

Direct outputs 2-1 to 2-<n> are functional in three-terminal systems.

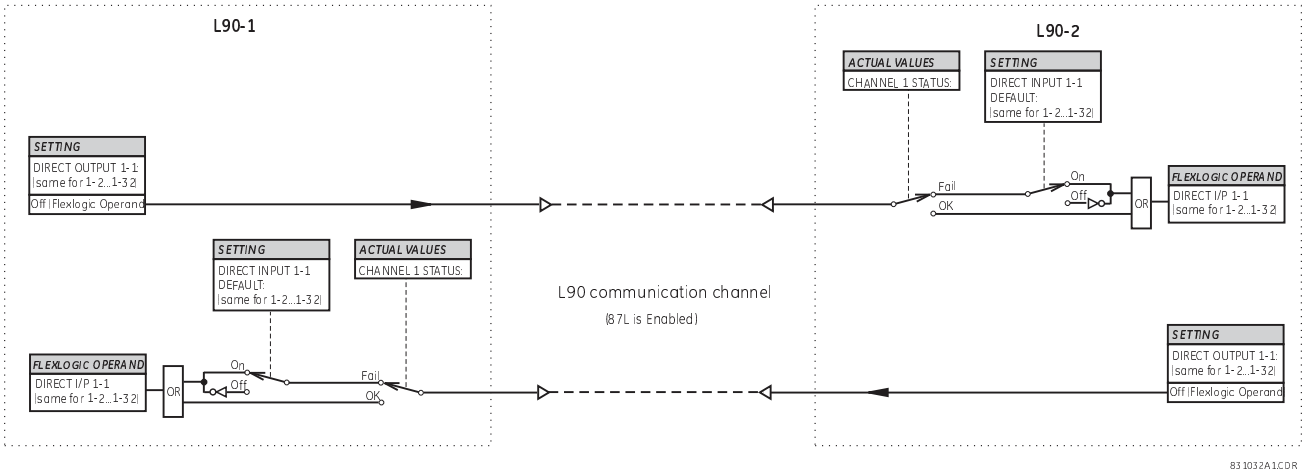

Figure 391: Direct inputs/outputs logic (example for L90 shown)

9.10.6.3 APPLICATION EXAMPLES

The examples introduced in the earlier Direct Inputs and Outputs section (part of the Product Setup section) are continued here to illustrate usage of the direct inputs and outputs.

Example 1: Extending input/output capabilities of a UR relay

Consider an application that requires additional quantities of contact inputs or output contacts or lines of programmable logic that exceed the capabilities of a single UR-series chassis. The problem is solved by adding an extra UR-series IED, such as the C30, to satisfy the additional inputs/outputs and programmable logic requirements. The figure shows that two IEDs are connected via single-channel digital communication cards.

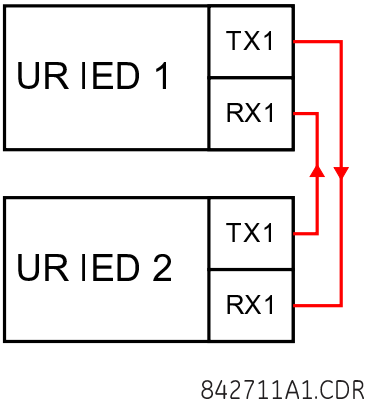

Figure 392: Input and output extension via direct inputs and outputs

Assume that contact input 1 from UR IED 2 is to be used by UR IED 1. The following settings are applied (Direct Input 5 and bit number 12 are used, as an example).

UR IED 1:

- ***DIRECT INPUT 5 DEVICE ID*** = *2*
- ***DIRECT INPUT 5 BIT NUMBER*** = *12*

UR IED 2:

- ***DIRECT OUT 12 OPERAND*** = Cont Ip 1 On

The Cont Ip 1 On operand of UR IED 2 is now available in UR IED 1 as DIRECT INPUT 5 ON.

Example 2: Interlocking busbar protection

A simple interlocking busbar protection scheme can be accomplished by sending a blocking signal from downstream devices, say 2, 3 and 4, to the upstream device that monitors a single incomer of the busbar, as shown in the figure.

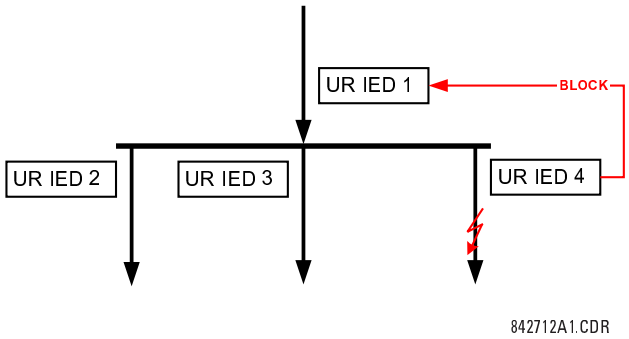

Figure 393: Sample interlocking busbar protection scheme

ssume that Phase Instantaneous Overcurrent 1 is used by Devices 2, 3, and 4 to block Device 1. If not blocked, Device 1 trips the bus upon detecting a fault and applying a short coordination time delay.

The following settings are applied (assume Bit 3 is used by all 3 devices to send the blocking signal and Direct Inputs 7, 8, and 9 are used by the receiving device to monitor the three blocking signals).

UR IED 2:

- ***DIRECT OUT 3 OPERAND***: PHASE IOC1 OP

UR IED 3:

- ***DIRECT OUT 3 OPERAND***: PHASE IOC1 OP

UR IED 4:

- ***DIRECT OUT 3 OPERAND***: PHASE IOC1 OP

UR IED 1:

- ***DIRECT INPUT 7 DEVICE ID***: *2*
- ***DIRECT INPUT 7 BIT NUMBER***: *3*
- ***DIRECT INPUT 7 DEFAULT STATE***: select *On* for security, select *Off* for dependability
- ***DIRECT INPUT 8 DEVICE ID***: *3*
- ***DIRECT INPUT 8 BIT NUMBER***: *3*
- ***DIRECT INPUT 8 DEFAULT STATE***: select *On* for security, select *Off* for dependability
- ***DIRECT INPUT 9 DEVICE ID***: *4*
- ***DIRECT INPUT 9 BIT NUMBER***: *3*
- ***DIRECT INPUT 9 DEFAULT STATE***: select *On*" for security, select *Off* for dependability

Now the three blocking signals are available in UR IED 1 as DIRECT INPUT 7 ON, DIRECT INPUT 8 ON, and DIRECT INPUT 9 ON. Upon losing communications or a device, the scheme is inclined to block (if any default state is set to *On*), or to trip the bus on any overcurrent condition (all default states set to *Off*).

Example 3: Pilot-aided schemes

Consider a three-terminal line protection application shown in the following figure:

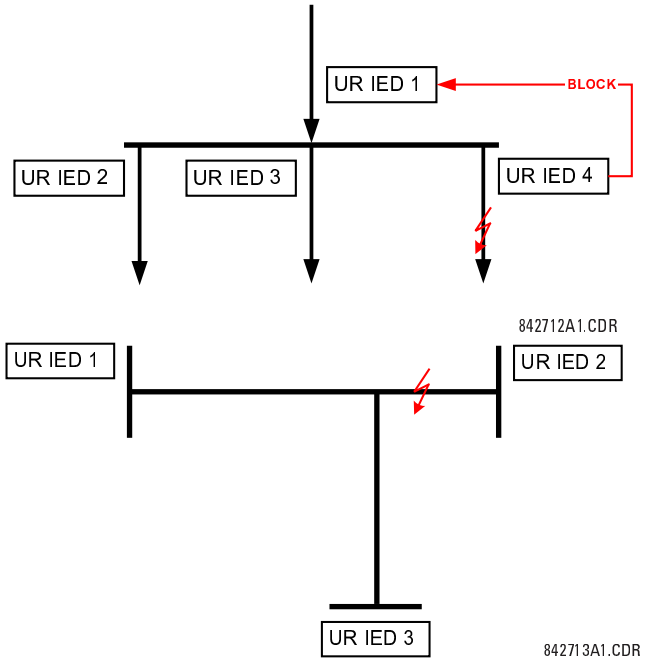

Figure 394: Three-terminal line application

Assume the Hybrid Permissive Overreaching Transfer Trip (Hybrid POTT) scheme is applied using the architecture shown as follows. The scheme output operand HYB POTT TX1 is used to key the permission.

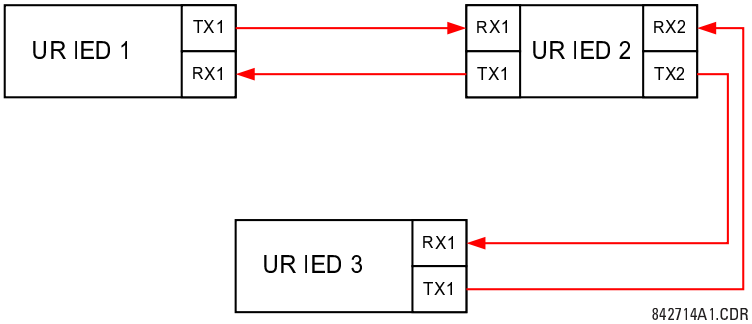

Figure 395: Single-channel open-loop configuration

In this architecture, Devices 1 and 3 do not communicate directly. Therefore, Device 2 must act as a "bridge." The following settings are applied:

UR IEC 1:

- ***DIRECT OUT 2 OPERAND***: HYB POTT TX1
- ***DIRECT INPUT 5 DEVICE ID***: *2*
- ***DIRECT INPUT 5 BIT NUMBER***: *2* (this is a message from IED 2)
- ***DIRECT INPUT 6 DEVICE ID***: *2*
- ***DIRECT INPUT 6 BIT NUMBER***: *4* (effectively, this is a message from IED 3)

UR IED 3:

- ***DIRECT OUT 2 OPERAND***: HYB POTT TX1
- ***DIRECT INPUT 5 DEVICE ID***: *2*
- ***DIRECT INPUT 5 BIT NUMBER***: *2* (this is a message from IED 2)
- ***DIRECT INPUT 6 DEVICE ID***: *2*
- ***DIRECT INPUT 6 BIT NUMBER***: *3* (effectively, this is a message from IED 1)

UR IED 2:

- ***DIRECT INPUT 5 DEVICE ID***: *1*
- ***DIRECT INPUT 5 BIT NUMBER***: *2*
- ***DIRECT INPUT 6 DEVICE ID***: *3*
- ***DIRECT INPUT 6 BIT NUMBER***: *2*
- ***DIRECT OUT 2 OPERAND***: HYB POTT TX1
- ***DIRECT OUT 3 OPERAND***: DIRECT INPUT 5 (forward a message from 1 to 3)
- ***DIRECT OUT 4 OPERAND***: DIRECT INPUT 6 (forward a message from 3 to 1)

The figure shows the signal flow among the three IEDs.

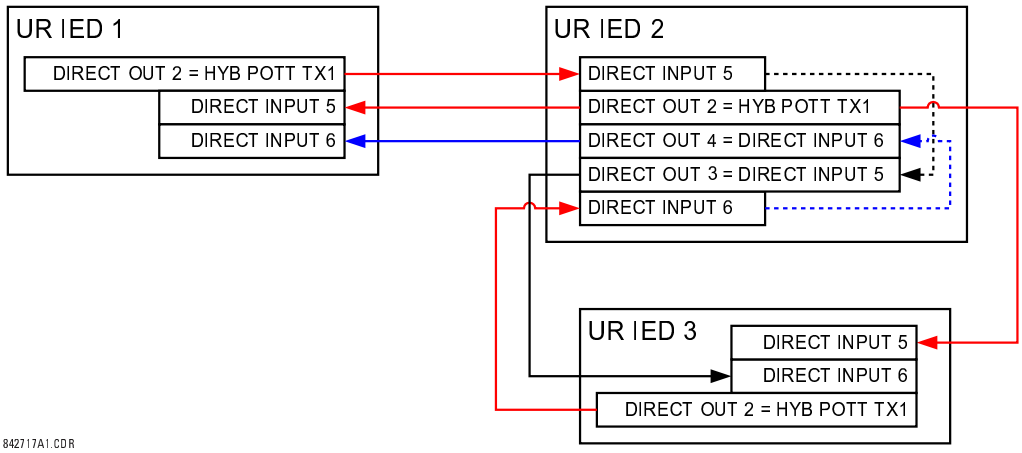

Figure 396: Signal flow for direct input and output

In three-terminal applications, both the remote terminals must grant permission to trip. Therefore, at each terminal, direct inputs 5 and 6 are ANDed in FlexLogic and the resulting operand configured as the permission to trip (***HYB POTT RX1*** setting).

9.10.7 TELEPROTECTION

The relay provides 16 teleprotection inputs on communications channel 1 (numbered 1-1 through 1-16) and 16 teleprotection inputs on communications channel 2 (on two-terminals two-channel and three-terminal systems only, numbered 2-1 through 2-16). The remote relay connected to channels 1 and 2 of the local relay is programmed by assigning FlexLogic operands to be sent via the selected communications channel. This allows the user to create distributed protection and control schemes via dedicated communications channels. Some examples are directional comparison pilot schemes and direct transfer tripping. Note that failures of communications channels affect teleprotection functionality. The teleprotection function must be enabled to utilize the inputs.

9.10.7.1 TELEPROTECTION INPUTS

Setting path: ***SETTINGS > INPUTS/OUTPUTS > TELEPROTECTION > TELEPROT INPUTS***

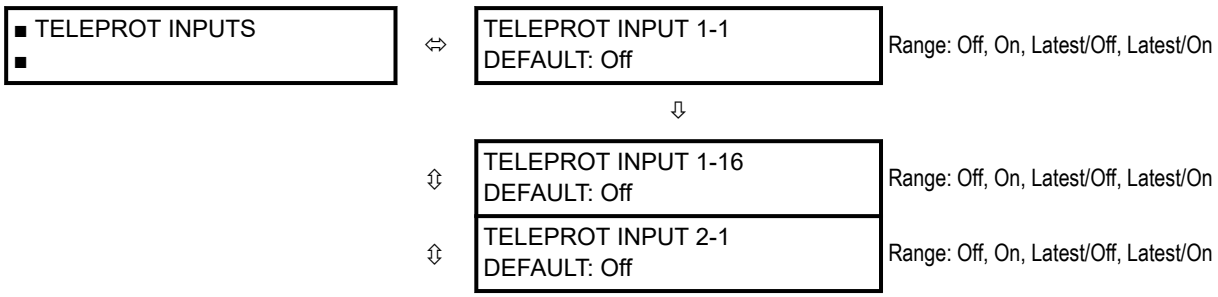

⇩

⇧ TELEPROT INPUT 2-16
DEFAULT: Off — Range: Off, On, Latest/Off, Latest/On

Setting the ***TELEPROT INPUT <n> DEFAULT*** settings to `On` defaults the input to logic 1 when the channel fails. A value of `Off` defaults the input to logic 0 when the channel fails.

The `Latest/On` and `Latest/Off` values freeze the input in case of lost communications. If the latest state is not known, such as after relay power-up but before the first communication exchange, then the input defaults to logic 1 for `Latest/On` and logic 0 for `Latest/Off`.

9.10.7.2 TELEPROTECTION OUTPUTS

Setting path: ***SETTINGS > INPUTS/OUTPUTS > TELEPROTECTION > TELEPROT OUTPUTS***

■ TELEPROT OUTPUTS
■

⇔ TELEPROT OUTPUT 1-1:
Off — Range: FlexLogic operand

⇩

⇧ TELEPROT OUTPUT 1-16:
Off — Range: FlexLogic operand

⇧ TELEPROT OUTPUT 2-1:
Off — Range: FlexLogic operand

⇩

⇧ TELEPROT OUTPUT 2-16:
Off — Range: FlexLogic operand

9.10.7.3 TELEPROTECTION INPUT/OUTPUT PROCESSING

As the following figure demonstrates, processing of the teleprotection inputs/outputs is dependent on the number of communication channels and terminals. On two-terminal two-channel systems, they are processed continuously on each channel and mapped separately per channel. Therefore, to achieve redundancy, the user must assign the same operand on both channels (teleprotection outputs at the sending end or corresponding teleprotection inputs at the receiving end). On three-terminal two-channel systems, redundancy is achieved by programming signal re-transmittal in the case of channel failure between any pair of relays.

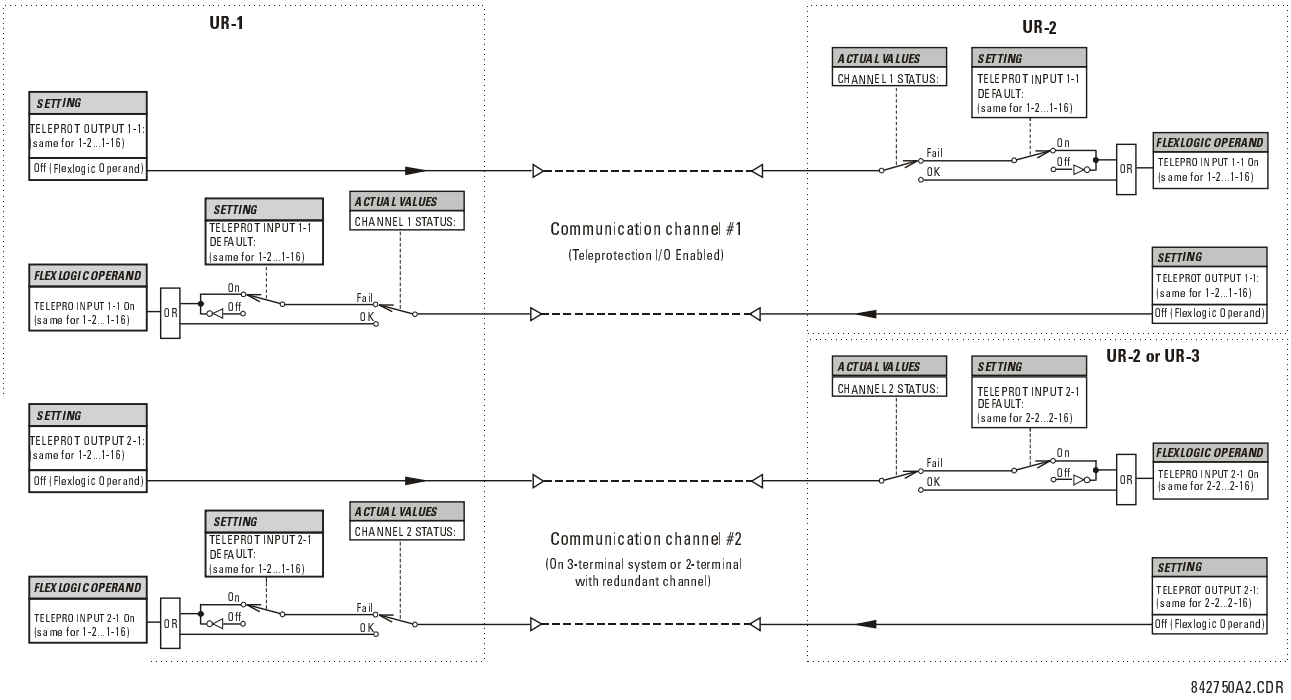

Figure 397: Teleprotection input/output processing

9.11 TRANSDUCER INPUTS/OUTPUTS

9.11.1 DCMA INPUTS

Different slots are used, depending on the model, as shown in the following table:

Slot	Models
F1	B90, C30, C70, G30, N60, T35, T60
H1	B30, C60, C95, D30, D60, F35, F60, G60, L30, L60, L90, M60
U8	B30, B90, C70, L30, L90
W8	C30, C60, C95, D30, D60, F35, F60, G30, G60, L60, M60, N60, T35, T60

SETTINGS > TRANSDUCER I/O > DCMA INPUTS > DCMA INPUT <slot>

■ DCMA INPUT <slot> ■	⇔	DCMA INPUT <slot> FUNCTION: Disabled	Range: Disabled, Enabled
	⇕	DCMA INPUT H1 ID: DCMA Ip 1	Range: up to 20 alphanumeric characters
	⇕	DCMA INPUT H1 UNITS: µA	Range: six alphanumeric characters
	⇕	DCMA INPUT H1 RANGE: 0 to -1 mA	Range: 0 to –1 mA, 0 to +1 mA, –1 to +1 mA, 0 to 5mA, 0 to 10mA, 0 to 20 mA, 4 to 20 m
	⇕	DCMA INPUT H1 MIN VALUE: 0.000	Range: –9999.999 to +9999.999 in steps of 0.001
	⇧	DCMA INPUT H1 MAX VALUE: 0.000	Range: –9999.999 to +9999.999 in steps of 0.001

Hardware and software are provided to receive signals from external transducers and to convert these signals into a digital format for use as required. The relay accepts inputs in the range of –1 to +20 mA DC, suuitable for use with most common transducer output ranges; all inputs are assumed to be linear over the complete range.

Before the DCmA input signal can be used, the value of the signal measured by the relay must be converted to the range and quantity of the external transducer primary input parameter, such as DC voltage or temperature. The relay simplifies this process by internally scaling the output from the external transducer and displaying the actual primary parameter.

DCmA input channels are arranged in a manner similar to CT and VT channels. Configure the individual channels with the settings shown here.

The channels are arranged in sub-modules of two channels, numbered from 1 through 8 from top to bottom. On power-up, the relay automatically generates configuration settings for every channel, based on the order code, in the same general manner that is used for CTs and VTs. Each channel is assigned a slot letter followed by the row number, 1 through 8 inclusive, which is used as the channel number. The relay generates an actual value for each available input channel.

Settings are generated automatically for every channel available in the specific relay as shown above for the first channel of an installed type 5F transducer module.

The function of the channel can be enabled or disabled. If disabled, no actual values are created for the channel. An alphanumeric ID is assigned to each channel; this ID is included in the channel actual value, along with the programmed units associated with the parameter measured by the transducer, such as volts, °C, megawatts, and so on. This ID is also used to reference the channel as the input parameter to features designed to measure this type of parameter.

The ***DCMA INPUT <slot> RANGE*** setting specifies the mA DC range of the transducer connected to the input channel.

The ***DCMA INPUT <slot> MIN VALUE*** and ***DCMA INPUT <slot> MAX VALUE*** settings are used to program the span of the transducer in primary units. For example, a temperature transducer might have a span from 0 to 250 °C; in this case the ***DCMA INPUT <slot> MIN VALUE*** value is `0` and the ***DCMA INPUT <slot> MAX VALUE*** value is `250`. Another example is a watts transducer with a span from –20 to +180 MW; in this case the ***DCMA INPUT <slot> MIN VALUE*** value is `-20` and the ***DCMA INPUT <slot> MAX VALUE*** value is `180`. Intermediate values between the minimum and maximum values are scaled linearly.

9.11.2 DCMA OUTPUTS

Different slots are used, depending on the model, as shown in the following table:

Slot	Models
F1	B90, C30, C70, G30, N60, T35, T60
H1	B30, C60, C95, D30, D60, F35, F60, G60, L30, L60, L90, M60
U8	B30, B90, C70, L30, L90
W8	C30, C60, C95, D30, D60, F35, F60, G30, G60, L60, M60, N60, T35, T60

SETTINGS > TRANSDUCER I/O > DCMA OUTPUTS > DCMA OUTPUT <slot>

■ DCMA OUTPUT <slot> ■	⇔	DCMA OUTPUT <slot> SOURCE: Off	Range: Off, any analog actual value parameter
	⇕	DCMA OUTPUT <slot> RANGE: –1 to 1 mA	Range: –1 to 1 mA, 0 to 1 mA, 4 to 20 mA
	⇕	DCMA OUTPUT <slot> MIN VAL: 0.000 pu	Range: –90.000 to 90.000 pu in steps of 0.001
	⇧	DCMA OUTPUT <slot> MAX VAL: 1.000 pu	Range: –90.000 to 90.000 pu in steps of 0.001

Hardware and software is provided to generate DCmA signals that allow interfacing with external equipment. The DCmA output channels are arranged in a manner similar to transducer input or CT and VT channels. The user configures individual channels with the settings as follows.

The channels are arranged in sub-modules of two channels, numbered 1 through 8 from top to bottom. On power-up, the relay automatically generates configuration settings for every channel, based on the order code, in the same manner used for CTs and VTs. Each channel is assigned a slot letter followed by the row number, 1 through 8 inclusive, which is used as the channel number.

Both the output range and a signal driving a given output are user-programmable via the following settings menu (an example for channel M5 is shown).

The relay checks the driving signal (x in equations below) for the minimum and maximum limits, and subsequently re-scales so the limits defined as ***MIN VAL*** and ***MAX VAL*** match the output range of the hardware defined as ***RANGE***. The following equation is applied:

$$I_{out} = \begin{cases} I_{min} & \text{if } x < \textbf{MIN VAL} \\ I_{max} & \text{if } x > \textbf{MAX VAL} \\ k(x - \textbf{MIN VAL}) + I_{min} & \text{otherwise} \end{cases}$$

where:

- x is a driving signal specified by the ***SOURCE*** setting
- I_{min} and I_{max} are defined by the ***RANGE*** setting
- k is a scaling constant calculated as:

$$k = \frac{I_{max} - I_{min}}{\text{MAX VAL} - \text{MIN VAL}}$$

The feature is intentionally inhibited if the ***MAX VAL*** and ***MIN VAL*** settings are entered incorrectly, for example when ***MAX VAL – MIN VAL*** < 0.1 pu. The resulting characteristic is illustrated in the following figure.

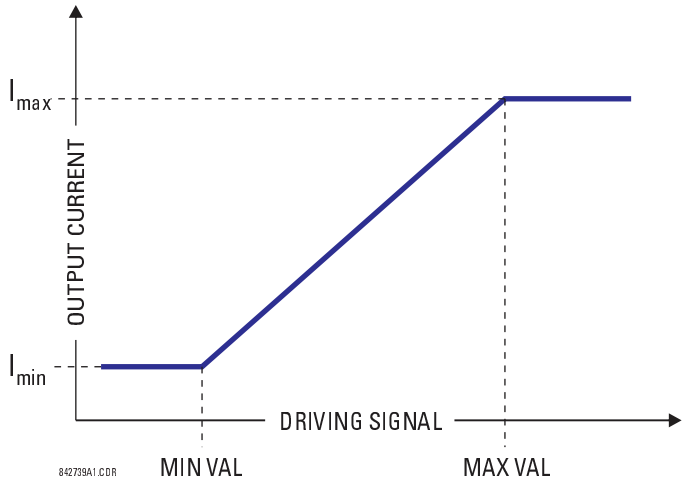

Figure 398: DCmA output characteristic

Settings

DCMA OUTPUT <slot> SOURCE

This setting specifies an internal analog value to drive the analog output. Actual values (FlexAnalog parameters) such as power, current amplitude, voltage amplitude, power factor, etc. can be configured as sources driving DCmA outputs. See Appendix A for a list of FlexAnalog parameters.

DCMA OUTPUT <slot> RANGE

This setting allows selection of the output range. Each DCmA channel can be set independently to work with different ranges. The three most commonly used output ranges are available.

DCMA OUTPUT <slot> MIN VAL

This setting allows setting the minimum limit for the signal that drives the output. This setting is used to control the mapping between an internal analog value and the output current. The setting is entered in per-unit values. The base units are defined in the same manner as the FlexElement base units.

DCMA OUTPUT <slot> MAX VAL

This setting allows setting the maximum limit for the signal that drives the output. This setting is used to control the mapping between an internal analog value and the output current. The setting is entered in per-unit values. The base units are defined in the same manner as the FlexElement base units.

Note:
The DCMA OUTPUT <slot> MIN VAL and DCMA OUTPUT <slot> MAX VAL settings are ignored for power factor base units (that is, if the DCMA OUTPUT <slot> SOURCE is set to FlexAnalog value based on power factor measurement).

9.11.3 DCMA APPLICATION EXAMPLES

Example: Power monitoring (not applicable to B30, B90, C30)

A three phase active power on a 13.8 kV system measured via UR-series relay source 1 is to be monitored by the DCmA H1 output of the range of –1 to 1 mA. The following settings are applied on the relay: CT ratio = 1200:5, VT secondary 115, VT connection is delta, and VT ratio = 120. The nominal current is 800 A primary and the nominal power factor is 0.90. The power is to be monitored in both importing and exporting directions and allow for 20% overload compared to the nominal.

The nominal three-phase power is:

$$P = \sqrt{3} \times 13.8\text{kV} \times 0.8\text{kA} \times 0.9 = 17.21\text{MW}$$

The three-phase power with 20% overload margin is:

$$P_{max} = 1.2 \times 17.21\text{MW} = 20.65\text{MW}$$

The base unit for power (refer to the FlexElements section in this chapter for additional details) is:

$$P_{BASE} = 115\text{V} \times 120 \times 1.2\text{kA} = 16.56\text{MW}$$

The minimum and maximum power values to be monitored (in pu) are:

$$\text{Minimum power} = -20.65\text{MW}/16.56\text{MW} = -1.247 \text{ pu}$$

$$\text{Maximum power} = 20.65\text{MW}/16.56\text{MW} = 1.247 \text{ pu}$$

The following settings are entered:

- ***DCMA OUTPUT H1 SOURCE***: `SRC 1 P`
- ***DCMA OUTPUT H1 RANGE***: `-1 to 1 mA`
- ***DCMA OUTPUT H1 MIN VAI***: `-1.247 pu`
- ***DCMA OUTPUT H1 MAX VAL***: `1.247 pu`

With the above settings, the output will represent the power with the scale of 1 mA per 20.65 MW. The worst-case error for this application can be calculated by superimposing the following two sources of error:

- ±0.5% of the full scale for the analog output module, or ±0.005 x (1-(-1)) x 20.65 MW = ±0.207 MW
- ±1% of reading error for the active power at power factor of 0.9

For example at the reading of 20 MW, the worst-case error is 0.01 ´ 20 MW + 0.207 MW = 0.407 MW.

Example: Current monitoring (not applicable to C30)

The phase A current (true RMS value) is to be monitored via the H2 current output working with the range from 4 to 20 mA. The CT ratio is 5000:5 and the maximum load current is 4200 A. The current is to be monitored from 0 A upwards, allowing for 50% overload.

The phase current with the 50% overload margin is:

$$I_{max} = 1.5 \times 4.2\text{kA} = 6.3\text{kA}$$

The base unit for current (see the FlexElements section in this chapter for additional details) is:

$$I_{BASE} = 5\text{kA}$$

The minimum and maximum power values to be monitored (in pu) are:

$$\text{Minimum current} = 0\text{kA}/5\text{kA} = 0 \text{ pu}$$

$$\text{Maximum current} = 6.3\text{kA}/5\text{kA} = 1.26 \text{ pu}$$

The following settings are entered:

- ***DCMA OUTPUT H2 SOURCE***: `SRC 1 Ia RMS`
- ***DCMA OUTPUT H2 RANGE***: `4 to 20 mA`
- ***DCMA OUTPUT H2 MIN VAL***: `0.000 pu`
- ***DCMA OUTPUT H2 MAX VAL***: `1.260 pu`

The worst-case error for this application can be calculated by superimposing the following two sources of error:

- ±0.5% of the full scale for the analog output module, or ±0.005 x (20 - 4) x 6.3 kA = ±0.504 kA
- ±0.25% of reading or ±0.1% of rated (whichever is greater) for currents between 0.1 and 2.0 of nominal

For example, at the reading of 4.2 kA, the worst-case error is max(0.0025 x 4.2 kA, 0.001 x 5 kA) + 0.504 kA = 0.515 kA.

Example: Voltage monitoring (not applicable to C30)

A positive-sequence voltage on a 400 kV system measured via source 2 is to be monitored by the DCmA H3 output with a range of 0 to 1 mA. The VT secondary setting is 66.4 V, the VT ratio setting is 6024, and the VT connection setting is “Delta.” The voltage is to be monitored in the range from 70% to 110% of nominal.

The minimum and maximum positive-sequence voltages to be monitored are:

$$V_{min} = 0.7 \text{ x } 400\text{kV}/\sqrt{3} = 161.66\text{kV}$$

$$V_{max} = 1.1 \text{ x } 400\text{kV}/\sqrt{3} = 254.03 \text{ kV}$$

The base unit for voltage (see the FlexElements section in this chapter for additional details) is:

$$V_{BASE} = 0.0664\text{kV x } 6024 = 400\text{kV}$$

The minimum and maximum voltage values to be monitored (in pu) are:

$$\text{Minimum voltage} = 161.66\text{kV}/400\text{kV} = 0.404 \text{ pu}$$

$$\text{Maximum voltage} = 254.03\text{kV}/400\text{kV} = 0.635 \text{ pu}$$

The following settings are entered:

- ***DCMA OUTPUT H3 SOURCE***: `SRC 2 V_1 mag`
- ***DCMA OUTPUT H3 RANGE***: `0 to 1 mA`
- ***DCMA OUTPUT H3 MIN VAL***: `0.404 pu`
- ***DCMA OUTPUT H3 MAX VAL***: `0.635 pu`

The limit settings differ from the expected 0.7 pu and 1.1 pu because the relay calculates the positive-sequence quantities scaled to the phase-to-ground voltages, even if the VTs are connected in “Delta” (see the Metering Conventions section in chapter 6), while at the same time the VT nominal voltage is 1 pu for the settings. Consequently the settings required in this example differ from naturally expected by the factor of √3.

The worst-case error for this application could be calculated by superimposing the following two sources of error:

- ±0.5% of the full scale for the analog output module, or ± 0.005 x (1-0) x 254.03 kV = ±1.27 kV
- ±0.5% of reading

For example, under nominal conditions, the positive-sequence reads 230.94 kV and the worst-case error is 0.005 x 230.94 kV + 1.27 kV = 2.42 kV.

9.11.4 RTD INPUTS

Different slots are used, depending on the model, as shown in the following table:

Slot	Models
F1	B90, C30, C70, G30, N60, T35, T60

Slot	Models
H1	B30, C60, C95, D30, D60, F35, F60, G60, L30, L60, L90, M60
U8	B30, B90, C70, L30, L90
W8	C30, C60, C95, D30, D60, F35, F60, G30, G60, L60, M60, N60, T35, T60

SETTINGS > TRANSDUCER I/O > RTD INPUTS > RTD INPUT <slot>

■ RTD INPUT <slot> ■	⇔	RTDINPUT <slot> FUNCTION: Disabled	Range: Disabled, Enabled
	⇕	RTD INPUT <slot> ID: RTD Ip 1	Range: up to 20 alphanumeric characters
	⇧	RTD INPUT <slot> TYPE: 100Ω Platinum	Range: 100Ω Nickel, 10Ω Copper, 100Ω Platinum, 120Ω Nickel

Hardware and software is provided to receive signals from external resistance temperature detectors and convert these signals into a digital format for use as required. These channels are intended to be connected to any of the RTD types in common use. Specific hardware details are contained in chapter 3.

RTD input channels are arranged in a manner similar to CT and VT channels. The user configures individual channels with the settings shown here.

The channels are arranged in sub-modules of two channels, numbered from 1 through 8 from top to bottom. On power-up, the relay automatically generates configuration settings for every channel, based on the order code, in the same general manner that is used for CTs and VTs. Each channel is assigned a slot letter followed by the row number, 1 through 8 inclusive, which is used as the channel number. The relay generates an actual value for each available input channel.

Settings are automatically generated for every channel available in the specific relay as shown above for the first channel of a type 5C transducer module installed in the first available slot.

The function of the channel can be either enabled or disabled. If disabled, there is not an actual value created for the channel. An alphanumeric ID is assigned to the channel; this ID is included in the channel actual values. It is also used to reference the channel as the input parameter to features designed to measure this type of parameter. Selecting the type of RTD connected to the channel configures the channel.

Actions based on RTD overtemperature, such as trips or alarms, are done in conjunction with the FlexElements feature. In FlexElements, the operate level is scaled to a base of 100°C. For example, a trip level of 150°C is achieved by setting the operate level at 1.5 pu. FlexElement operands are available to FlexLogic for further interlocking or to operate an output contact directly.

See the following table for reference temperature values for each RTD type.

Temperature		Resistance (in ohms)			
°C	°F	100 Ω Pt (DIN 43760)	120 Ω Ni	100 Ω Ni	10 Ω Cu
–50	–58	80.31	86.17	71.81	7.10
–40	–40	84.27	92.76	77.30	7.49
–30	–22	88.22	99.41	82.84	7.88
–20	–4	92.16	106.15	88.45	8.26
–10	14	96.09	113.00	94.17	8.65
0	32	100.00	120.00	100.00	9.04
10	50	103.90	127.17	105.97	9.42
20	68	107.79	134.52	112.10	9.81

Temperature		Resistance (in ohms)			
°C	°F	100 Ω Pt (DIN 43760)	120 Ω Ni	100 Ω Ni	10 Ω Cu
30	86	111.67	142.06	118.38	10.19
40	104	115.54	149.79	124.82	10.58
50	122	119.39	157.74	131.45	10.97
60	140	123.24	165.90	138.25	11.35
70	158	127.07	174.25	145.20	11.74
80	176	130.89	182.84	152.37	12.12
90	194	134.70	191.64	159.70	12.51
100	212	138.50	200.64	167.20	12.90
110	230	142.29	209.85	174.87	13.28
120	248	146.06	219.29	182.75	13.67
130	266	149.82	228.96	190.80	14.06
140	284	153.58	238.85	199.04	14.44
150	302	157.32	248.95	207.45	14.83
160	320	161.04	259.30	216.08	15.22
170	338	164.76	269.91	224.92	15.61
180	356	168.47	280.77	233.97	16.00
190	374	172.46	291.96	243.30	16.39
200	392	175.84	303.46	252.88	16.78
210	410	179.51	315.31	262.76	17.17
220	428	183.17	327.54	272.94	17.56
230	446	186.82	340.14	283.45	17.95
240	464	190.45	353.14	294.28	18.34
250	482	194.08	366.53	305.44	18.73

9.12 TESTING

9.12.1 IED MODE CONFIG

SETTINGS > TESTING > IED MODE CONFIG

■ IED MODE CONFIG ■	⇔	IED MODE: On	Range: On, Test, Test Blocked
	⇕	TEST MODE INPUT: Off	Range: FlexLogic operand
	⇕	TEST-BLK MODE INPUT: Off	Range: FlexLogic operand
	⇕	MODE CTRL VIA MMS: On	Range: FlexLogic operand (displays with IEC 61850)
	⇕	CONTACT I/O FORCING: On	Range: FlexLogic operand
	⇕	IED MODE TARGET: ENABLED	Range: Enabled, Disabled
	⇕	IED BEHAVIOR: On	Range: On, Test, Test Blocked
	⇧	IED MODE TRIP SECURITY: Disabled	Range: Enabled, Disabled

The Product provides a test facility to verify the functionality of contact inputs and outputs, some communication functions and the Phasor Measurement Unit (PMU, where applicable), using simulated conditions. It is accessible in the software and graphical front panel.

IED MODE

Can be in one of three states: On, Test, or Test Blocked. In UR 7.7 and later, as outlined in the Simulation section that follows, the UR test mode and GOOSE simulation mode are isolated, and they no longer depend on the mode setting here.

The `On` mode is for normal in service operation; the relay protection, control, and communication function is normal. Test features are disabled, except channel tests and PMU tests remain usable when provided. In On mode, the front panel Test Mode LED is off.

The `Test Blocked` mode is implemented per IEC61850-7-4 standard. This allows the relay to be isolated quickly so that it cannot negatively affect the power system or other parts of the substation automation system. This is primarily used for testing purposes, but can also be used for loading new firmware, changing hardware modules, and changing communication connections etc., providing all local or regional safety/testing guidelines are adhered to.

As far as practical, all relay output signals are blocked, contact outputs are de-energized, and latching outputs are frozen. Commands to HardFiber Bricks are blocked. The test bit of quality attribute of values that can be output via IEC 61850 services is set to `TRUE`. The validity bit of the quality attribute of the data sent via IEC 61850 services is set to "GOOD" if no major error is active. Direct I/O, 87L channel and PMU tests are operational on applicable models. In `Test Blocked` mode, the front panel Test Mode LED is on.

The Test mode is for testing involving forcing relay operation by test signal injection and verifying correct relay output. This mode is also for tests to verify the relay outputs (both contact and communications) have the intended impact on specific power system devices or on specific other substation automation devices. Contact outputs can be selectively enabled or forced as described in the Force Contact Inputs and Force Contact Outputs sections that

follow. Shared outputs to Bricks have their test mode flag raised, which results in their value only being accepted by relays also in forcible Test mode. The test bit and validity bit of the quality attribute of data sent via IEC 61850 services are set as *TRUE* and *GOOD* respectively. In Test mode, the front panel Test Mode LED flashes.

Otherwise, the UR remains fully operational while in the Test mode, allowing for various testing procedures. In particular, the protection and control elements, and FlexLogic function normally. Other than the IEC 61850 protocol, communications based inputs and outputs remain fully operational. The test procedure must take this into account. Direct I/O channel tests and PMU tests are usable on applicable models.

When set to Test mode and the operand selected by the ***CONTACT I/O FORCING*** setting is On.

- If the ***FORCE Cont Ip #*** setting is set to Open or Closed, the respective quality attribute of the data sent via IEC 61850 services is set to q.source = `substituted`
- If the ***FORCE Cont Op #*** setting is set to Energized, De-energized, or Freeze, the respective quality attribute of the data sent via IEC 61850 services is set to q.source = `substituted`

When the Breaker Status is substituted manually from a graphical front panel, the respective quality attribute of the breaker position data sett via IEC 61850 services is set to q.source = `substituted`.

The ***IED MODE*** setting can be selected through

- Front panel
- EnerVista UR Setup software
- FlexLogic operands
- IEC 61850 control to LLN0.Mod
- ***INITIATE TEST MODE ON SIM*** setting (under ***SIMULATION > SUBSCRIBE TO SIMULATED VALUES*** menu)

> *Note:*
> *It is important to note that following the writing of a new setting file to the relay, IED behavior will change according to the IED MODE CONFIG settings in the new file. The user must ensure that IED MODE CONFIG settings in the new file are set according to the expected behavior following the writing of the new setting file.*

TEST MODE INPUT

This setting selects a FlexLogic operand that can put the UR into Test mode as per the logic diagram. Any FlexLogic operand can be assigned to enable forcible Test mode, that is driven by any remote inputs, logic outputs, front panel (user-programmable push buttons), and so on.

TEST-BLK MODE INPUT

This setting selects a FlexLogic operand that can put the UR into Test Blocked mode as per the logic diagram. Any FlexLogic operand can be assigned to enable test isolated mode, that is driven by any remote inputs, logic outputs, front panel (user-programmable push buttons) and so on.

MODE CTRL VIA MMS

This setting selects a FlexLogic operand for an IEC 61850 client to control the IED mode. When the operand is low/off, IED mode control from the IEC 61850 client is disabled, and the control request to LLN0.Mod.ctlVal returns return a negative response. When high/on, IED mode control by an IEC 61850 client is accepted.

CONTACT I/O FORCING

When in Test mode, the operand selected by this setting dictates further response of the UR to testing conditions, as described in the Force Contact Inputs and Force Contact Outputs sections that follow. When no operand is specified in this setting, forcing of inputs and outputs during Test mode are not available.

The test mode state is indicated on the relay front panel by a combination of the Test Mode LED indicator, the In-Service LED indicator, and by the critical fail relay, as shown in the table.

IED MODE TARGET

When this setting is Enabled, the corresponding target message of IED Mode Config is displayed on the front panel when the relay behavior is either TEST or TEST BLOCKED. The target message gets self-reset when the relay behavior is ON.

When this setting is Disabled, target message is not displayed when the relay behavior is either *TEST* or *TEST BLOCKED*.

IED MODE setting	In-Service LED	Test Mode LED	Critical fail relay	CONTACT I/O FORCING setting	Contact input and output behavior
On	Unaffected	Off	Normal	No effect	Normal
Test Blocked	Off	On	De-energized	No effect	Contact outputs disabled
Test	Off	Flashing	De-energized	Off	Normal
				On	Controlled by forcing features

Note:
Following a restart or power-up, the CONTACT I/O FORCING setting remains at the last value before restart, but force contact input and force contact output settings revert to Normal state.

Note:
Before uploading settings to the Online Window from the Offline Window of the software, ensure that the settings in this panel in the Offline Window have been set to required values. Otherwise, undesired relay operation can occur.

IED BEHAVIOR

Displays the actual behavior of the IED based on different inputs to control the IED MODE. Note that the test mode can be changed through the front panel, EnerVista software, FlexLogic operands, IEC 61850 control to LLN0.Mod, and ***INITIATE TEST MODE ON SIM*** setting, with the following behavior.

TEST MODE TRIP SECURITY

This setting is used to govern both IOC Trip Security and Differential Trip Security functions. It is in effect only when the IED is not in the normal in-service operation mode (i.e., IED Mode is set to a value other than On).

Change to IED MODE	Behavior
Using front panel	IED MODE and IED BEHAVIOR change in software
Using software	IED MODE and IED BEHAVIOR change on front panel
Using operand	IED MODE does not change in software or front panel, IED BEHAVIOR reflects change
Using INITIATE TEST MODE ON SIM setting	IED MODE and IED BEHAVIOR do not change in software or front panel

9.12.2 IED MODE PROCESS

The ***IED MODE*** setting is changed to Test or Test Blocked (depending upon the selected setting value for *INITIATE TEST MODE ON SIM*) when the relay is put into simulation mode. After this, the ***IED MODE*** is controlled by the ***TESTING > IED MODE CONFIG*** menu.

The ***IED MODE*** selection is illustrated in the logic diagram.

The SR Latch that drives the UR into `Test mode` or `On mode` are reset-dominant, which means that `Test Blocked` mode has the highest priority over Test and On modes, when simultaneous commands are active. For example, if both the FlexLogic operands assigned to the TEST MODE INPUT and TEST-BLK MODE INPUT settings are ON, then the ***IED MODE*** is Test Blocked.

If Any Major error FlexLogic operand is set, then ***IED MODE*** is set to `Test Blocked`.

Following UR restart or power-up, the ***IED MODE*** remains latched at the last value, until change is trigged by another input/command.

When the relay simulation mode is enabled (LPHD.Sim.stVal = TRUE), the `INITIATE TEST MODE ON SIM` setting triggers respective test mode. If the relay is already in `Test` or `Test Blocked mode`, the priority scheme defined in the ***IED MODE*** processing logic decides the resulting IED mode.

In summary, enabling the Test or Test Blocked mode in the ***TESTING > IED MODE CONFIG*** menu has no impact on the simulation mode. However, enabling the simulation mode triggers the respective test mode selected by the `INITIATE TEST MODE ON SIM` setting and the resulting IED mode is decided by the ***IED MODE*** process logic diagram. Once the simulation mode is enabled, the user can switch independently among IED modes using the ***IED MODE CONFIG*** settings while the simulation mode continues.

As shown in the logic diagram, the `INITIATE TEST MODE ON SIM` setting triggers the respective IED mode only when the relay is entering into simulation mode (meaning on the positive edge trigger of RLY IN SIM MODE FlexLogic operand) or there is a change in the `INITIATE TEST MODE ON SIM` setting value. Once simulation mode is enabled, any command to change the IED Mode triggers the respective IED mode. When the simulation mode is disabled, the test mode initiated by `INITIATE TEST MODE ON SIM` setting resets.

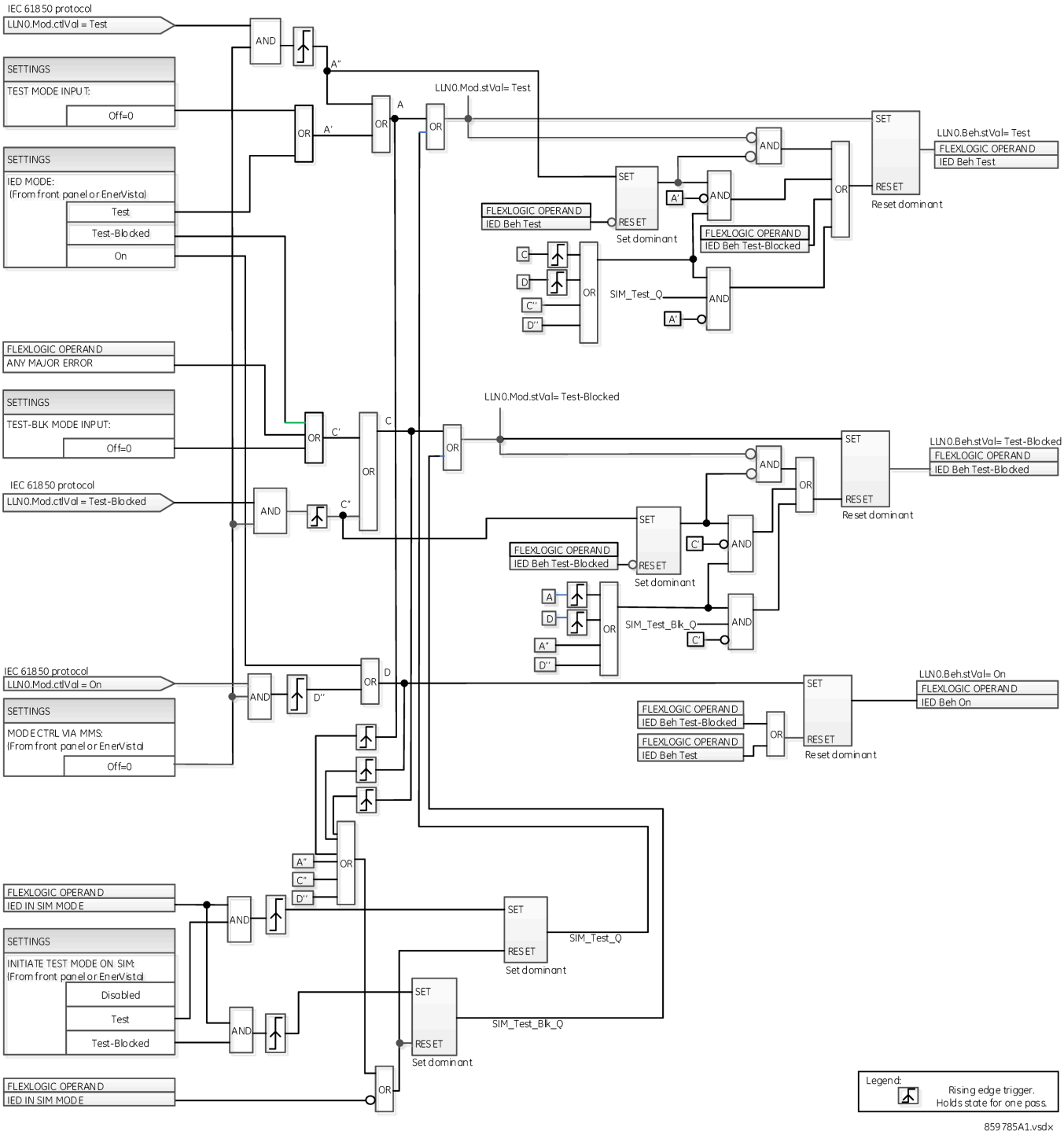

Figure 399: IED mode processing logic

9.12.3 FORCE CONTACT INPUTS

Setting path: ***SETTINGS > INPUTS/OUTPUTS > DIRECT OUTPUTS> DIRECT OUTPUTS***

■ FORCE CONTACT ■ INPUTS	⇔	FORCE Cont Ip <n> Normal	Range: Normal, Open, Closed

The force contact inputs feature provides a method of performing checks on the function of all contact inputs.

While in Test mode, the relay contact inputs can be pre-programmed to respond in the following ways:

- If set to `Normal`, the input remains fully operational. It is controlled by the voltage across its input terminals and can be turned on and off by external circuitry. Select this value if a given input must be operational during the test. This includes, for example, an input initiating the test, or being a part of a user pre-programmed test sequence.
- If set to `Open`, the input is forced to report as opened (Logic 0) while the operand selected by ***CONTACT I/O FORCING*** setting is On, regardless of the voltage across the input terminals. While the selected operand is Off, the input behaves as it does when in service.
- If set to `Closed`, the input is forced to report as closed (Logic 1) while the operand selected by ***CONTACT I/O FORCING*** setting is On regardless of the voltage across the input terminals. While the selected operand is Off, the input behaves as it does when in service.

> *Note:*
> *Following a restart or power-up, the **CONTACT I/O FORCING** setting remains at the last value before restart, but force contact input and force contact output settings revert to Normal state.*

9.12.4 FORCE CONTACT OUTPUTS

Setting path: ***SETTINGS > INPUTS/OUTPUTS > DIRECT OUTPUTS> DIRECT OUTPUTS***

■ FORCE CONTACT ■ OUTPUTS	⇔	FORCE Cont op <n> Normal	Range: Normal, Energized, De-energized, Freeze

The force contact outputs feature provides a method of performing checks on the function of all contact outputs.

While in Test mode, the relay contact outputs can be pre-programmed to respond in the following ways:

- If set to `Normal`, the contact output remains fully operational. It operates when its control operand is logic 1 and resets when its control operand is logic 0.
- If set to `Energized`, the output closes and remains closed while the operand selected by the ***CONTACT I/O FORCING*** setting is On, regardless of the status of the operand configured to control the output contact. While the selected operand is Off, the output behaves as it does when in service.
- If set to D`e-energized`, the output opens and remains opened while the operand selected by the ***CONTACT I/O FORCING*** setting is On, regardless of the status of the operand configured to control the output contact. While the selected operand is Off, the output behaves as it does when in service.
- If set to `Freeze`, the output retains its position at the instant before the ***IED MODE*** was `Test` and the operand selected by the ***CONTACT I/O FORCING*** setting was On, regardless of later changes in the status of the operand configured to control the output contact. While the selected operand is Off, the output behaves as it does when in service.

> *Note:*
> *Following a restart or power-up, the **CONTACT I/O FORCING** setting remains at the last value before restart, but force contact input and force contact output settings revert to Normal state.*

9.12.5 PHASOR MEASUREMENT UNIT TEST VALUES

Setting path: ***TESTING > PMU TEST VALUES > PMU <n> TEST VALUES***

> *Note:*
> *Only PMU TEST 1 is shown*

■ PMU 1 ■ TEST VALUES	⇔	PMU 1 TEST FUNCTION: Disabled	Range: Enabled, Disabled
	⇕	PMU 1 VA TEST MAGNITUDE: 500.00 kV	Range: 0.00 to 700.00 kV in steps of 0.01
	⇕	PMU 1 VA TEST ANGLE: 0.00°	Range: –180.00 to 180.00° in steps of 0.05
	⇕	PMU 1 VB TEST MAGNITUDE: 500.00 kV	Range: 0.00 to 700.00 kV in steps of 0.01
	⇕	PMU 1 VB TEST ANGLE: –120.00°	Range: –180.00 to 180.00° in steps of 0.05
	⇕	PMU 1 VC TEST MAGNITUDE: 500.00 kV	Range: 0.00 to 700.00 kV in steps of 0.01
	⇕	PMU 1 VC TEST ANGLE: 120.00°	Range: –180.00 to 180.00° in steps of 0.05
	⇕	PMU 1 VX TEST MAGNITUDE: 500.00 kV	Range: 0.00 to 700.00 kV in steps of 0.01
	⇕	PMU 1 VX TEST ANGLE: 0.00°	Range: –180.00 to 180.00° in steps of 0.05
	⇕	PMU 1 IA TEST MAGNITUDE: 1.000 kA	Range: 0.000 to 9.999 kA in steps of 0.001
	⇕	PMU 1 IA TEST ANGLE: –10.00°	Range: –180.00 to 180.00° in steps of 0.05
	⇕	PMU 1 IB TEST MAGNITUDE: 1.000 kA	Range: 0.000 to 9.999 kA in steps of 0.001
	⇕	PMU 1 IB TEST ANGLE: –130.00°	Range: –180.00 to 180.00° in steps of 0.05
	⇕	PMU 1 IC TEST MAGNITUDE: 1.000 kA	Range: 0.000 to 9.999 kA in steps of 0.001
	⇕	PMU 1 IC TEST ANGLE: 110.00°	Range: –180.00 to 180.00° in steps of 0.05
	⇕	PMU 1 IG TEST MAGNITUDE: 0.000 kA	Range: 0.000 to 9.999 kA in steps of 0.001
	⇕	PMU 1 IG TEST ANGLE: 0.00°	Range: –180.00 to 180.00° in steps of 0.05
	⇕	PMU 1 TEST FREQUENCY: 60.000 Hz	Range: 20.000 to 70.000 Hz in steps of 0.001
	⇧	PMU 1 TEST df/dt: 0.00 Hz/s	Range: –10.00 to 10.00 Hz/s in steps of 0.01

The relay must be in test mode to use the PMU test mode. That is, the ***TESTING > TEST MODE FUNCTION*** setting must be enabled, and the ***TESTING > TEST MODE INITIATE*** initiating signal must be ON.

During the PMU test mode, the physical channels (VA, VB, VC, VX, IA, IB, IC, and IG), frequency, and rate of change of frequency are substituted with user values, while the symmetrical components are calculated from the physical channels. The test values are not explicitly marked in the outgoing data frames. When required, it is recommended to use the user-programmable digital channels to signal the IEEE C37.118 client that test values are being sent in place of the real measurements.

he UR Synchrophasor Implementation defines a test mode that sends a pre-defined set of synchrophasors out over the communication channel when the test mode function setting is enabled. In test mode, the following actions take place:

- The Data Invalid / Test Mode bit (bit 15 in the STAT word) is set
- The Sim bit in all output datasets is set

9.13 SIMULATION

Setting path: ***SETTINGS > SIMULATION***

■ SETTINGS ■ SIMULATION	⇔	■ SUBSCRIBE TO ■ SIMULATED VALUES
	⇧	■ PUBLISH ■ SIMULATED VALUES

9.13.1 SUBSCRIBE TO SIMULATED VALUES

Setting path: ***SETTINGS > SIMULATION > SUBSCRIBE TO SIMULATED VALUES***

■ SUBSCRIBE TO ■ SIMULATED VALUES	⇔	SIMULATION MODE: Disabled	Range: Disabled, Enabled
	⇕	SIM MODE INPUT: Off	Range: FlexLogic operand
	⇕	SIM CTRL VIA MMS: On	Range: FlexLogic operand
	⇕	INITIATE TEST MODE ON SIM: Test-Blocked	Range: Disabled, Test, Test-Blocked
	⇕	SIM MODE TARGET: Enabled	Range: Enabled, Disabled
	⇕	SIM MODE EVENTS: Disabled	Range: Enabled, Disabled
	⇧	SIMULATION MODE STATUS: Disabled	Range: Enabled, Disabled

Note:
The relay is provided with optional IEC 61850 communications that include simulation. The option is specified at the time of ordering. The field reads `Unavailable` *when IEC 61850 is not present.*

Prior to UR 7.7, when the ***UR TEST MODE FUNCTION*** is set to `Test Blocked` or `Test`, the sim bit in the header of all transmitted GOOSE messages is set to TRUE, so that the UR plays the simulator role during the testing and commissioning phases. The **Sim** data attribute in the relay is set (<MasterLD>/LPHD1.Sim.stVal = TRUE), so that if GOOSE messages are received with the `simulation` flag set, these are used in place of the normal messages. The quality attribute values that are transmitted via GOOSE services are set to `valid` + `test`.

In UR 7.7 and later, the UR test mode and GOOSE simulation mode are isolated. The sim bit in the transmitted GOOSE messages and the relay *Sim* attribute (<MasterLD>/LPHD1.Sim.stVal) are controlled via new Modbus settings and MMS control requests. They no longer depend on the U***R TEST MODE FUNCTION*** or ***IED MODE.***

The settings also display in the software when the Product is set to IEC 61850 Edition 2. When using IEC 61850 Edition 1, the settings are read-only.

SIMULATION MODE

When set to Disabled, the relay *Sim* attribute (<MasterLD>/LPHD1.Sim.StVal) is set to False and the GOOSE/SV messages received with simulation flag/bit set are ignored.

When set to Enabled, the relay Sim attribute (<MasterLD>/LPHD1.Sim.StVal) is set to True, so that if GOOSE/SV messages are received with the simulation flag/bit set, these are used in place of the normal messages.

SV messages has a simulation bit in the Reserved 1 field.

SIM MODE INPUT

This setting selects a FlexLogic operand. When set, the relay Simulation mode is enabled and, if the messages (either GOOSE or SV) are received with the simulation bit true, messages from simulation devices are used in place of actual messages. Any FlexLogic operand can be assigned to enable simulation mode, that is, driven by any remote inputs, logic outputs, front panel (user-programmable pushbuttons), and so on.

SIM CTRL VIA MMS

This setting selects a FlexLogic operand for the IEC 61850 client to control the simulation mode.

When set to Off, simulation mode selection via IEC 61850 client is disabled and control request to LPHD.Sim.ctlVal returns return negative response.

When set to On, simulation mode selection via IEC 61850 client is accepted.

This setting can be set from the front panel, EnerVista UR Setup software, FlexLogic operand, and IEC61850 control to LPHD.Sim.ctlVal.

INITIATE TEST MODE ON SIM

This setting initiates the selected test mode when simulation mode is enabled.

When set to Disabled, any command (from an IEC 61850 client, front panel, or Flex Operand) to set the simulation mode enables the Sim mode irrespective of the current IED mode.

When set to Test or Test-Blocked, any command to set the simulation mode selects respective test mode, if the relay is not already in Test or Test-Blocked mode. If the relay is already in Test or Test-Blocked mode by any user command (from IEC 61850 client, front panel, or Flex Operand), the respective priority defined in test mode processing decides the resultant test mode.

In summary, enabling the Test or Test-Blocked mode via the ***IED MODE*** setting (from front panel or EnerVista), via a IEC61850 client command to LLN0.Mod.ctlVal, or via ***TEST MODE INPUT*** and ***TEST-BLK MODE INPUT*** settings (FlexLogic operands) has no impact on the simulation mode. However, enabling the simulation mode using the ***SIMULATION MODE*** setting (from front panel or EnerVista), via an IEC61850 client command to LPHD.Sim.ctlVal, or via ***SIM MODE INPUT*** setting (FlexLogic operand) enables the selected test mode by the ***INITIATE TEST MODE ON SIM*** setting. A user can independently disable the test or test-blocked mode by any specified command type, but the relay simulation mode continues and accepts the simulated values in place of actual values until the simulation mode is disabled.

SIM MODE TARGET

When this setting is Enabled, a target message `IED IN SIM MODE` is displayed on the front panel when the relay is in Simulation mode. The target message gets self-reset when the relay exits the Simulation mode.

When this setting is Disabled, target message is not displayed when the relay is in Simulation mode.

SIM MODE EVENT

This setting is used to control whether the change in Simulation mode of relay is recorded in the event recorder. When this setting is Enabled, the event showing the change in the status of Simulation is recorded. If this setting is Disabled, the events related to Simulation mode are not recorded.

SIMULATION MODE STATUS

This is an actual value that indicates the present simulation mode of the relay.

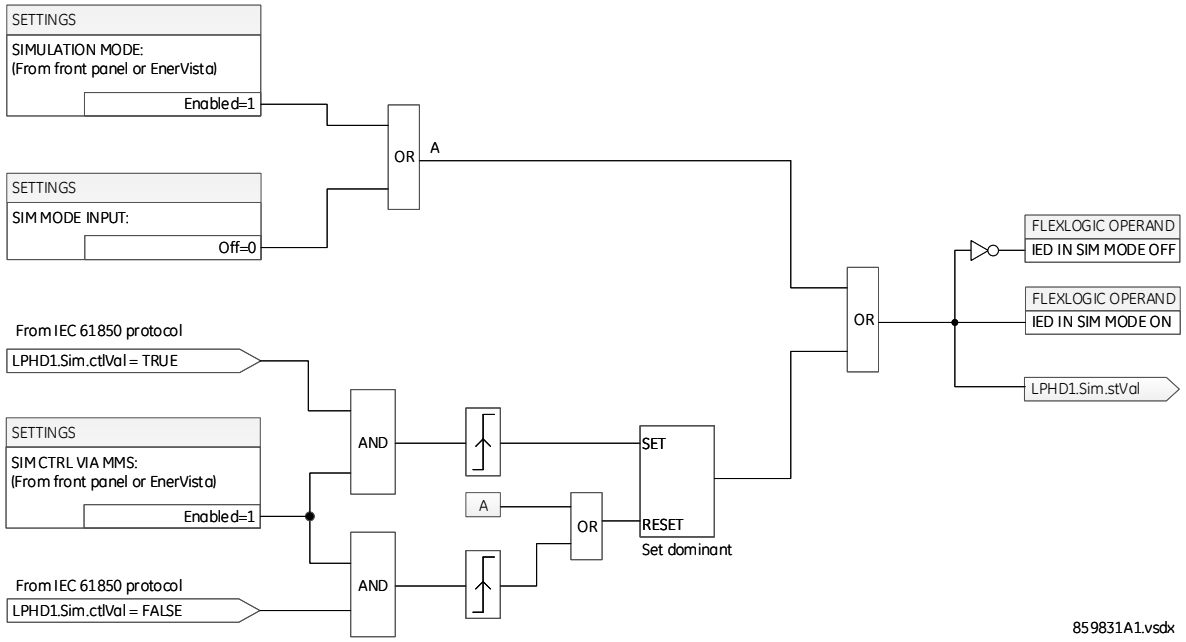

Figure 400: Simulation mode logic

9.13.2 PUBLISH SIMULATED VALUES

Setting path: ***SETTINGS > SIMULATION > PUBLISH SIMULATED VALUES***

■PUBLISH ■ SIMULATED VALUES	⇔ TxGOOSE SIM MODE: Disabled	Range: Disabled, Enabled
	⇧ SIM Q.VALIDITY: NONE	Range: NONE, GOOD, INVALID, QUESTIONABLE
	⇧ SIM Q.TEST: NONE	Range: NONE, TRUE, FALSE

TxGOOSE SIM MODE

When set to Disabled, the sim bits in all transmitted GOOSE messages are set to FALSE.

When set to Enabled, the sim bits in all transmitted GOOSE messages are set to TRUE.

This setting can be modified through the front panel, EnerVista UR Setup software, IEC 61850 client control to <MasterLD>/LPHD1.TxGoSim.

SIM Q.VALIDITY

This setting simulates the validity bits of the quality attribute values included in all transmitted GOOSE messages. When set to NONE, the q.Validity bits are set based on the logical node behavior value. When set to any other value, the q.Validity bits of quality attributes included in all transmitted GOOSE messages are set to the selected value.

This setting is used when ***TxGOOSE SIM MODE*** is enabled. It can be modified through the front panel and EnerVista UR Setup software.

SIM Q.TEST

This setting simulates the Test bit of the quality attribute values included in all transmitted GOOSE messages. When set to NONE, the q.Test bit is set based on the relay ***TEST MODE FUNCTION / IED*** MODE. When set to any other value, the q.Test bit of quality attributes included in all transmitted GOOSE messages is set to the selected value.

This setting is used when ***TxGOOSE SIM MODE*** is set to Enabled. It can be modified through the front panel and EnerVista UR Setup software.

9.14 PROCESS BUS SETTINGS

Setting path: ***SETTINGS > PROCESS BUS MODULE > GENERAL***

■ GENERAL ■	NETWORK CONFIG: INDEPENDENT	Range: INDEPENDENT, PRP, HSR, Dual HSR
	PRP SUPV MCST ADDR: 01154E000100	Range: 01 15 4E 00 01 00 to 01 15 4E 00 01 FF
	HSR-1 SUPV MCST ADDR: 01154E000100	Range: 01 15 4E 00 01 00 to 01 15 4E 00 01 FF
	HSR-2 SUPV MCST ADDR: 01154E000101	Range: 01 15 4E 00 01 00 to 01 15 4E 00 01 FF
	PORT 1a FUNCTION: Enabled	Range: Disabled, Enabled
	⇩	
	PORT 4b FUNCTION: Enabled	Range: Disabled, Enabled
	SV TRBL PRT BLOCK: Global	Range: Global, Partial
	SV TRBL CONT OP BLK: Off	Range: FlexLogic operand
	SV DELAY ALARM: 6.0 ms	Range: 1.0 ms to 10.0 ms in steps of 0.1 ms
	QUALITY CHECK: Reject Questionable	Range: Reject Questionable, Accept Questionable
	ANTI-ALIASING FILTER: Disabled	Range: Disabled, Enabled
	SMPSYNCH CHECK: Global	Range: Global, Local, Local-87L, Any
	Fallback GmID: 00 00 00 00 00 00 00 00	Range: 8 Octet string
	TARGET: Click to view or edit selected Targets	Range: List of available Targets. Access in EnerVista.
	EVENTS: Click to view or edit selected Events	Range: List of available FlexLogic operand types from SV Stream Processing. Access in EnerVista.

NETWORK CONFIG

This setting specifies the network configuration and redundancy for the Process Bus Module. If set to `INDEPENDENT`, all ports on the Process Bus Module are enabled, and the Process Bus Module can be connected directly to merging units (MUs) or to a switch without redundancy. To enable and disable individual ports on the Process Bus Module in a point-to-point (PPP) network, use the ***PORT x FUNCTION*** settings. If set to `PRP` or `HSR`, ports 1a and 1b are enabled. The ***PORT 1a FUNCTION*** and ***PORT 1b FUNCTION*** settings change, depending on usage. If set to `Dual HSR`, ports 1a and 1b are enabled for one HSR ring. When using a Process Bus Module, ports 3a and 3b are enabled for another HSR ring.

PRP SUPV MCST ADDR

This setting changes the multicast address used by the Parallel Redundancy Protocol (PRP) supervision frames. Configure all DANP devices in the PRP network with the same multicast address for the network supervision to operate properly. You can edit this setting when the ***NETWORK CONFIG*** setting is set to *PRP*.

HSR-1 SUPV MCST ADDR

This setting changes the multicast address used by High-Availability Seamless Redundancy ring one (HSR-1 ports 1a and 1b) supervision frames, for single HSR configuration. Configure all DANH devices in the HSR network with the same multicast address for the network supervision to operate properly. This setting is editable when the ***NETWORK CONFIG*** setting is set to *HSR* or *Dual HSR*.

HSR-2 SUPV MCST ADDR

This setting changes the multicast address used by the HSR-2 (ports 3a and 3b) supervision frames for the second DANH in a Dual HSR configuration. Configure all DANH devices in the HSR network with the same multicast address for the network supervision to operate properly. You can edit this setting when the ***NETWORK CONFIG*** setting is set to *Dual HSR*.

PORT 1a to 4b FUNCTION

These settings manually enable and disable Process Bus Module Ethernet ports. Typically, Process Bus Module ports are order-code dependent, and the *INDEPENDENT* network configuration enables all the ports by default. These settings allow individual ports to be enabled and disabled individually. To connect only a few of the ports, other ports can be disabled to avoid a `PBEthPort-# Offline` self-test error. The fields active depend on order code and ***NETWORK CONFIG*** setting. For order code 85, ports 1a, 1b, 3a, and 3b are available to be turned on or off. For order codes 86 and 87, all eight ports can be available to be turned on or off.

When a port is disabled, all transmitting and receiving traffic on the port is blocked. Relay restart is not required when changing these port function fields.

SV TRBL PRT BLOCK

In case of loss of any subscribed SV streams or due to bad quality of any subscribed SV frames, the relay's protection functions need to be blocked to avoid undesired operation. This setting specifies the type of blocking applied. When set to *Global*, all the protection functions that utilize the sampled values are blocked. Communications, data logging, and oscillography remain functional. Availability of switchgear control is determined by the SV TRBL CONT OP BLK operand. When set to *Partial*, only those protection functions are blocked that utilize the sampled values from the affected SV stream. All other protection functions remain operational.

SV TRBL CONT OP BLK

This setting selects a FlexLogic operand that determines whether the contact outputs are blocked or not. When the state of the operand is low, the contact outputs are not blocked when there is a loss of any SV stream or received SV frames have bad quality. You can enable switchgear control through contact outputs during SV stream trouble. When the operand is high, the contact outputs are blocked when there is a loss of any SV stream or received SV frames have bad quality and the switchgear control is not available through contact outputs during SV stream trouble.

SV DELAY ALARM

The sampled value (SV) frames may arrive with a delay from the MUs, which can be due to the MU performance or different network path delays. This setting specifies the maximum delay expected between the time a sample is taken at the MU and the time of arrival of that SV message. Sampling time is estimated based on the UR Process Bus Module clock and the sampling rate. If the calculated frame delay is more than this setting value, the RxSV# Delay Alm On FlexLogic operand asserts. The setting value needs to be calibrated and set at the commissioning time for the given network topology. An alarm in runtime indicates the network performance is degrading over the time. In short, this setting specifies how long the relay waits to declare that a sample is delayed. Protection is not blocked by this setting.

QUALITY CHECK

Flags are used to assess the quality of sampled value data to ensure protection. This setting specifies how the sampled values are processed by the relay when the associated ***q.validity*** is set to `Questionable`. Quality is checked per AC bank, not per SV stream. When set to `Reject Questionable`, the questionable data is considered invalid and the frame is rejected. Only Good quality data is accepted. Set it to `Accept Questionable` only if it is absolutely known that questionable quality from a MU is not compromising the quality of the data for various applications. When set to `Accept Questionable`, both the *Good* and *Questionable* quality data are accepted.

ANTI-ALIASING FILTER

This setting activates or deactivates the anti-aliasing filter that conditions the sampled values from the Process Bus network. If the Merging Unit providing sampled values is applies an anti-aliasing filter, this setting must be disabled. Otherwise, this setting can be enabled to apply filtering of the received sampled values. When enabled, the device applies a low-pass-filter, which attenuates all the harmonics above the 15th order.

SMPSYNCH CHECK

This setting is a time synchronization check. It specifies the time synchronization source of an SV stream expected by the Process Bus Module.

When set to `Global`, only the SV streams with ***SmpSynch*** indicating a `Global (2)` value are accepted. A stream with a ***SmpSynch*** value other than `Global (2)` is rejected.

When set to `Local`, all SV streams with ***SmpSynch*** indicating a `Local (1)` or `Global (2)` area clock are accepted.

When set to `Any`, any ***SmpSynch*** value in the range of 0 to 254 is acceptable. Streams outside the range are rejected.

When all the subscribed MU streams support IEC61850 Ed 2.1, an additional acceptance criterion as outlined in the description of setting Fallback GmID, has been added from UR version 8.5 and onwards

Fallback GmID

In the RxSV streams supporting IEC61850 Ed 2.1, the *SynchSrcID* attribute is used as acceptance criteria for the RxSV streams, which are used by the Protection elements. In the absence of Global Clock, this setting indicates the GmID of the local clock to which all subscribed MUs have to be synchronized for RxSV streams to be accepted. The effect of the ***Fallback GmID*** is explained as below:

When ***SMPSYNCH CHECK*** is set to `Global`, only the RxSV streams with SmpSynch attribute indicating a `Global (2)` value are accepted. SynchSrcID(GmID) Check is not done as all the streams accepted are Globally synchronized.

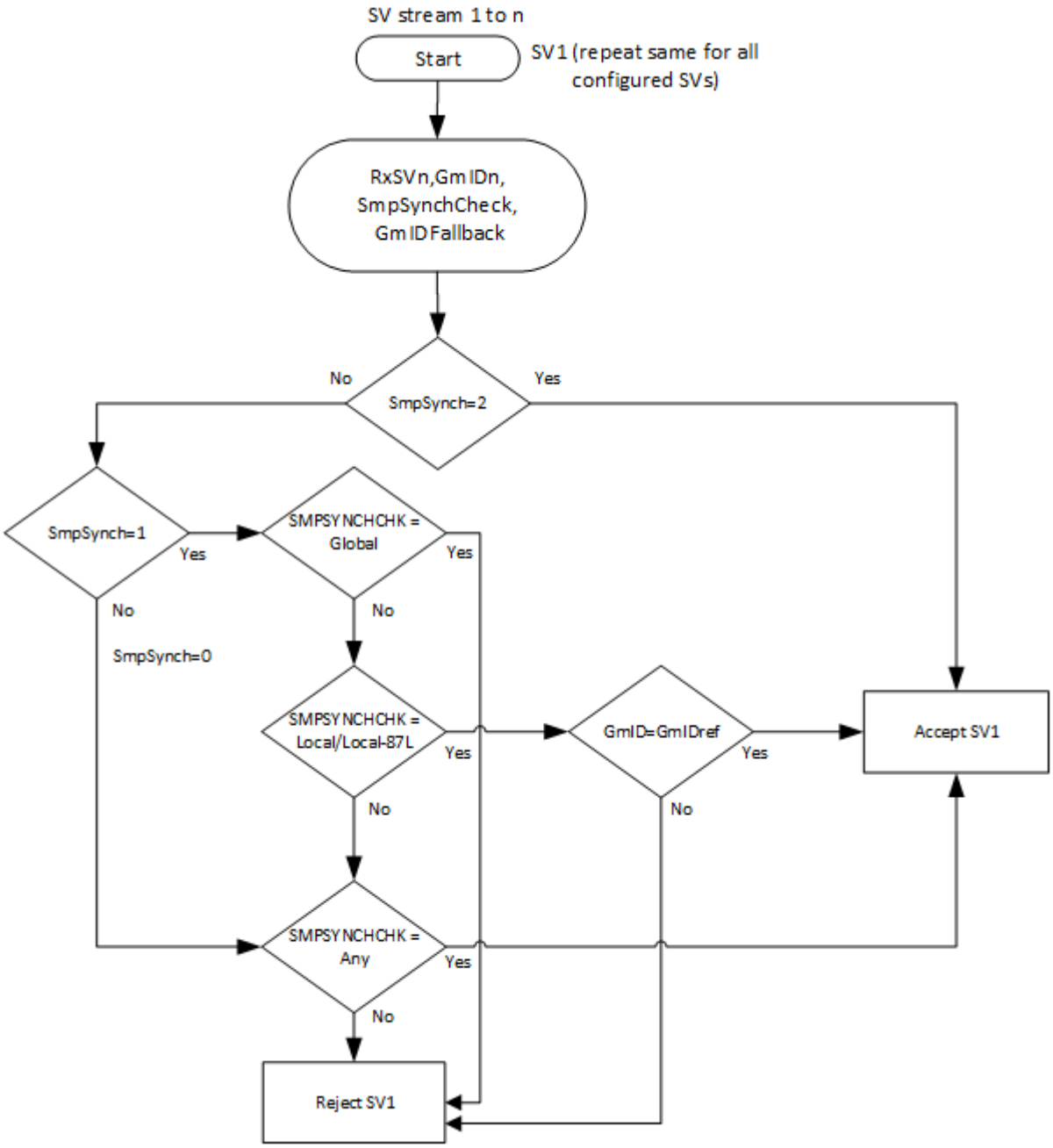

Figure 401: SympSynchCheck with GmID Flowchart

Effect of SMPSYNCH CHECK setting and attribute

MU Smpsynch Attribute	UR Setting: SMPSYNCH CHECK		
	Global	Local	Any
Global	Protection elements operational	Protection elements operational	Protection elements operational
Local	Protection elements blocked	Protection elements operational if GmId=GmIDRef	Protection elements operational
Any	Protection elements blocked	Protection elements blocked	Other protection elements operational

TARGET

With this setting, you can select the target messages of the affected SV stream(s) to be displayed on the front panel. The target resets itself once the issue with the SV stream is resolved. Note that a selected target message applies to all the configured SV streams. For example, if target message ***RxSV DELAY ALM ON***' is selected, then a target displays when any of the configured SV streams has an active SV Delay Alarm. When disabled, no target message displays on the front panel.

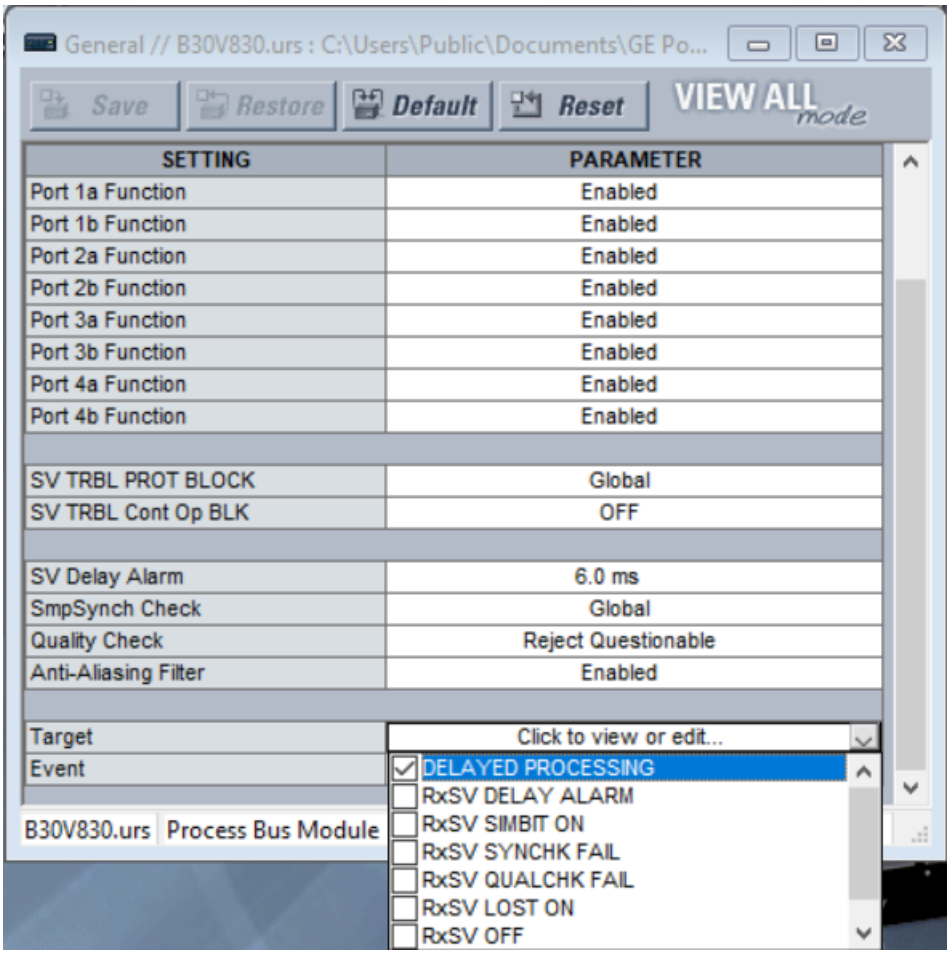

Figure 402: FlexLogic operand target selection

EVENTS

With this setting, you can select the flexlogic operands, which will generate the events of the affected SV stream(s), to be recorded in the event recorder. Note that a selected event from the menu applies to all the configured SV streams. When disabled, no event is recorded in the event recorder.

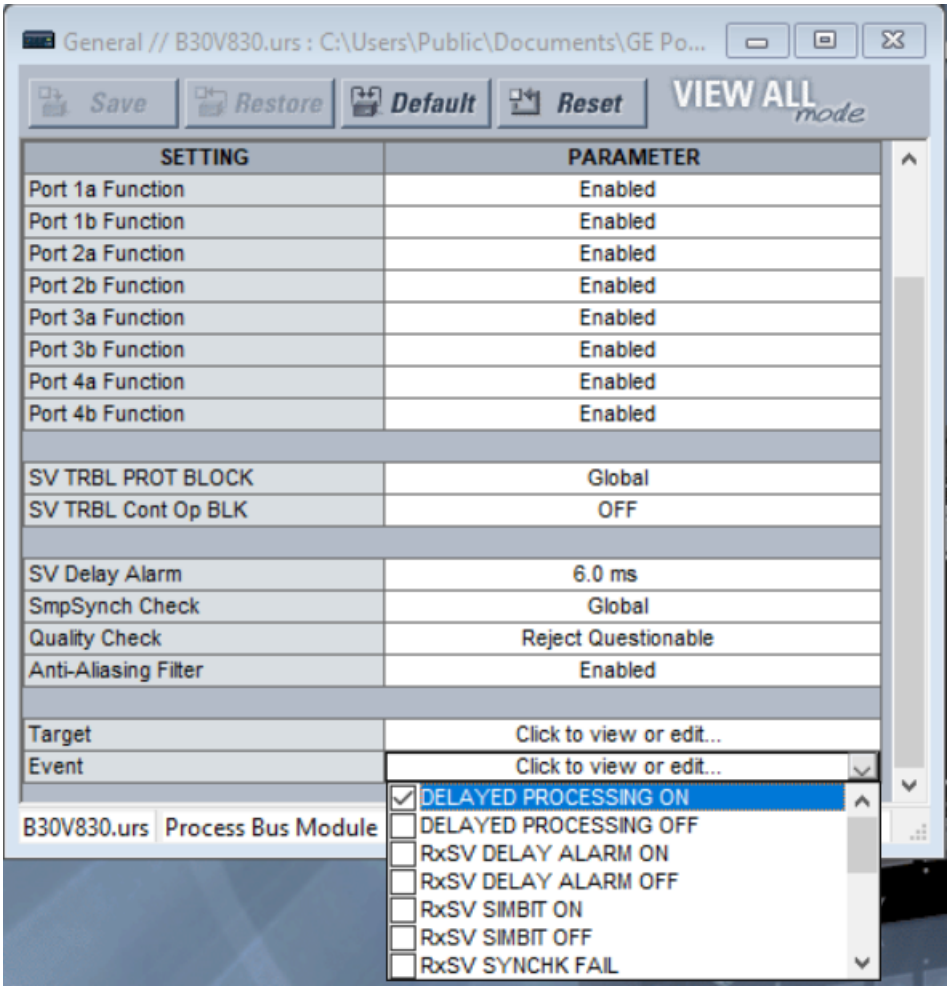

Figure 403: FlexLogic operand event selection

> *Note:*
> *Choose carefully the events to be recorded in the event recorder. If an SV stream is noisy, there is risk of event recorder overflow. Apart from testing, select a minimal number of events following relay commissioning*

Important!

> *Note:*
> *The assertion of the **Delayed Processing On** operand can be observed only in the event recorder because the oscillography is not running when the SV samples are delayed enough to trigger the assertion of this operand.*

9.15 SV STREAM SETTINGS

The following settings are available.

RxSV Format

Range: IEC 61850-9-2LE r2-1, IEC 61869-9 ed1.0

Default: IEC 61850-9-2LE r2-1

This setting selects the SV frame format, or protocol.

When set to `IEC 61850-9-2LE r2-1`, the relay assumes that the received SV frame references datasets that comply with IEC 61850-9-2LE, Table 6: Dataset (PhsMeas1). The IED must be configured with a system frequency of 50 or 60 Hz for correct operation.

When set to `IEC 61869-9 ed1.0`, the relay assumes that the dataset rules comply with IEC 61869-9 ed1.0 and that the number of Application-layer Service Data Units (ASDUs) are user-configurable.

Note:
When a file using a single SV stream (either IEC 61850-9-2LE r2-1 or IEC 61869-9 ed1.0) is converted from firmware version 8.2x and below to firmware versions 8.3x and above, the conversion will complete with no errors and the RxSV Format setting will have the same value as the original file. If there is a mix of SV streams in the original file, then the user will be notified of this error and all configured SV streams will be set to the SV Stream default; "Disabled". The RxSV Format setting will also default to "IEC 61850-9-2LE r2-1"

SV Stream

- *Range: Disabled, Enabled*
- *Default: Disabled*

This setting enables an SV stream. When disabled, all other ***RxSV*** settings are not editable and set to default.

svID

- *Range: 1 up to 129 Visible String characters*
- *Default: empty string*

svID refers to the name of the sampled value packet. The svID field of incoming SV messages must exactly match this value for the message to be accepted as a valid RxSV# message. The svID field of the sampled value frame must be unique within the system/substation.

Dst MAC

- *Range: any valid multicast MAC (12-digit hexadecimal number)*
- *Default: 01-0C-CD-04-00-00*

Only received SV messages having a destination Media Access Control (MAC) address equal to this value are accepted as valid RxSV# messages. Each address must be unique. The destination MAC increases the overall performance of multicast message reception by filtering only the configured messages for processing. For a received SV message, the Dst MAC is validated if it matches with any of the configured RxSV# Dst MAC. If validation is successful, the message is forwarded for further checks. There is no explicit check for the configured Dst MAC versus the SvID for a received SV message.

ConfRev

- *Range: 0 to 2147483647 in steps of 1*
- *Default: 0*

ConfRev refers to configuration revision, which is a count of configuration changes in the SV control block. If the value entered here is non-zero, the ConfRev field of incoming SV messages must match this value for the message

to be accepted as a valid RxSV# message. If the setting is zero, RxSV# does not check the value received in the ConfRev field.

Force MU Out of Service

- *Range: FlexLogic operand*
- *Default: Off*

This setting is intended specifically for forcing a faulty Merging Unit (MU) out of service in applications where a circuit can be energized from more than one side, such as breaker and a half application, and the redundancy at MU level is not available. For such application current from both sides are summed up using UR source mechanism and if one MU fails, it will block all protection functions from using this source.

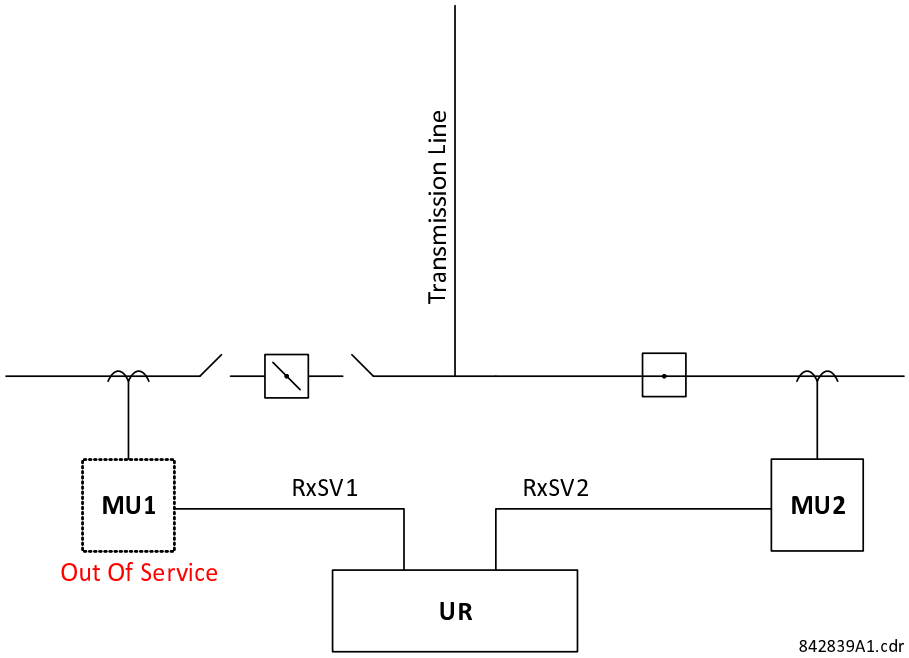

Figure 404: Forcing MU1 out of service for a Breaker-and-a-half configuration

For example, in the above figure it is possible to open Breaker1 and still keep the system energized through Breaker 2. The setting ***FORCE MU OUT OF SERVICE*** allows MU1to be taken out of service while keeping the protection and control elements operational by using the RxSV stream from MU2 only. If redundancy is available at MU level, then the protection can be kept operational without using setting FORCE MU OUT OF SERVICE, through the Cross-checking functionality. Please refer to the description of settings CROSS-CHECKING, PHASE ORIGIN 1, 2 and NEUTRAL ORIGIN 1, 2 for more details.

To put an MU out of service, the corresponding breaker has to be opened before asserting the FlexLogic selected in the setting ***FORCE MU OUT OF SERVICE*** to the `ON` state. The MU can now be disconnected for troubleshooting purposes. The current channels from the affected MU will be treated as online with sampled current values forced to ZEROs. The protection using respective source remains operational based on the current values sent by the other MU which is located on the closed breaker side.

Note that:

- Keeping RxSV online (with current substituted as ZEROs) is applicable to current channels only. The status of voltage channels will become Offline, and the protection elements will get blocked according to the setting ***SV TRBL PRT BLOCK***.
- The FlexLogic operands on the SV Config logic show the actual state of the affected the RxSV stream (i.e., RxSV# Off/On), irrespective of setting ***FORCE MU OUT OF SERVICE*** being Off or On.

You must ensure that the primary circuit to which the affected MU is connected remains de-energized for the entire duration of forcing MU out of service, otherwise the protection elements will mal-operate. The circuit should be de-

energized before changing the setting ***FORCE MU OUT OF SERVICE*** to `On`. The circuit should be energized only after the setting FORCE MU OUT OF SERVICE is set to `Off`.

SV stream processing FlexLogic operands must not be used to automate FORCE MU OUT OF SERVICE. We strongly recommend that ***FORCE MU OUT OF SERVICE*** is manually controlled (for example, through a pushbutton, contact input, virtual input, or GOOSE).

The setting ***FORCE MU OUT OF SERVICE*** is intended for applications where a breaker can be opened, and the corresponding MU can be taken out of service while the circuit is energized through another breaker such as in breaker-and-a-half application. For any other application, the use of this setting should be carefully evaluated.

We do not recommend using the setting ***FORCE MU OUT OF SERVICE*** together with the cross-checking function.

Stream Status

This is an LED status indicator for the reception of an SV stream (RxSV#). A green LED reflects the RxSV# On FlexLogic operand, meaning that the SV stream is online. A red LED reflects the RxSV# Off FlexLogic operand, meaning that the SV stream is offline. When the EnerVista UR Setup software is not online or the stream is disabled, the LED is grayed-out with Not Available, or “-NA-” status.

Advanced Configuration

Click the button to display or hide the fields.

These are settings to import an MU CID file and/or support IEC 61869-9 based SV streams, as per Table 902 on Standard sample rates. IEC 61869-9 allows flexibility on numbers of current and voltage channels. It can be in one of these sequences: A, B, C, N or A, AB, B, BC, C, CA, N. The UR supports up to eight CT channels and up to eight VT channels and one or two ASDUs for protection applications. The following settings are active when the SV Stream field is set to IEC 61869-9, and they also depend on the MU Variant Code.

MU SCL Import

Use this feature to configure SV streams by importing an MU CID file. The setting file comparison with IEC 61869-9-2LE configuration is not available. The IEC 61850 Merge feature with IEC 61869-9-2LE is not available. Upon clicking the Import button and selecting a .cid file, a window appears from which to select the stream to import.

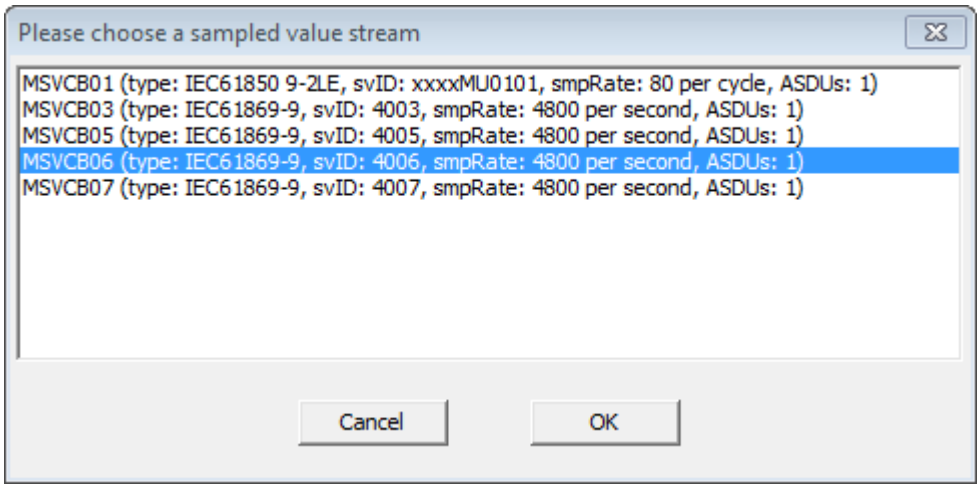

Figure 405: Selecting a stream to import from a merging unit CID file

Rules for accepting a CID file include:

- The same remote channel cannot be mapped to more than one AC bank channel
- An AC bank channel cannot be mapped to more than one remote channel

- For each AC bank, there are three phase inputs from the same SV control block and all three inputs are configured
- Phase 1 and Phase 2 inputs are not from the same SV control block
- Phase 1 and Phase 2 aux inputs are not from the same SV control block
- A configured Phase consumes three analog channels and Aux consumes one analog channel, with a maximum of 24 channels

SvCBRef

- *Range: 0 up to 129 alphanumeric, underscore, slash, and period characters, beginning with an alpha character*
- *Default: empty string*

This field is read-only. When imported, the MU SCL file populates this field. The value is an ObjectReference to the publishing control block in the format:

- <LDName>/LLN0.<SvCBName>

where <LDName> is the function-related name, if any, of the logical device containing the publishing control block, otherwise the product-related name of that logical device, and <SvCBName> is the name of the publishing control block.

When RxSV# is configured manually, the field is empty.

CT Channels

- *Range: 0 to 8*
- *Default: 4*

This setting specifies the number of CT channels available in the subscribed RxSV# message from the publisher MU. The CT-1 fields reflect the number selected here. The number of current quantities matches the number specified by the Variant Code of the MU.

Typically, a CT channel includes four current channels (three phase-ground currents and one ground/neutral/earth current). A current channel is the combination of the current sample value attribute (AmpSv.instMag.i) and the subsequent quality attribute (AmpSv.q).

If CT Channels is 4, CT1-A/B/C/N are supported for the stream.

If CT Channels is 8, CT2-A/B/C/N also are supported for the stream.

If CT Channels is 0, no CT channels display for AC input selection.

This setting is read-only and fixed at 4 when an ***SV Stream*** is set to IEC 61850-9-2LE.

If a message displays that `the number of channels being selected for CT inputs...exceeds the total allowable 4 CT channels`, this means that the CT Channels field is set at 4 and there are entries in the CT2-A/B/C/N fields. Set the latter fields to None or increase the number of channels.

VT Channels

- *Range: 0 to 8*
- *Default: 4*

This setting specifies the number of VT channels in the subscribed RxSV# message from the publisher MU. Typically, VT channels include four voltage channels (three phase-ground voltages and auxiliary voltage). This setting specifies the number of voltage channels in the subscribed RxSV# message. The voltage channel is the combination of voltage sample value attribute (VolSv.instMag.i) and the corresponding quality attribute (VolSv.q). The VT-1 fields reflect the number selected here. The number of voltage quantities matches the number specified by the Variant Code of the dataset.

If VT Channels is 4, VT1-A/B/C/N are supported for the stream.

If VT Channels is 8, VT2-A/B/C/ also are supported for the stream.

If VT Channels is 0, no VT channels display for AC input selection.

This setting is read-only and fixed at 4 when an ***SV Stream*** is set to IEC 61850-9-2LE.

If a message displays that "`the number of channels being selected for CT inputs...exceeds the total allowable 2 VT`, this means that the VT Channels field is set at 2 and there are more than two entries in the VT1-A/B/C/N fields. The number of configured VT1 fields needs to match the VT Channels field.

ASDUs

- *Range: 1, 2*
- *Default: 1*

This setting specifies the number of Application-layer Service Data Units (ASDUs) concatenated in one Application Protocol Data Unit (APDU) in the subscribed RxSV# message. When concatenating several ASDUs into one frame, the ASDU with the oldest samples is the first one in the frame. This setting is read-only and set at the default when an SV Stream is set to IEC 61850-9-2LE.

Recycle power to the relay when changing this setting.

Variant Code

The EnerVista software auto-populates the Variant Code for the RxSV# message based on the settings Sample Rate, the number of ASDUs, the number of CT Channels, and the number of VT Channels configured.

For example, F4800S2I8U0 describes sampled values with 4800 samples per second, two ASDU (samples) per message, 8 currents, and no voltages.

As another example, F4800S1I8U4 means sampled values with 4800 samples per second, 1 ASDU per message, 8 CT channels, and 4 VT channels.

This field is read-only as per IEC 61869-9: 2016, Clause-6.903.2.

The number of samples (sample rate) in the variant code is set based on the ***SETTINGS > SYSTEM SETUP > POWER SYSTEM > NOMINAL FREQUENCY*** setting. This value displays `4000 Hz` for 50 Hz nominal frequency. This value displays `4800 Hz` for 60 Hz nominal frequency or any other nominal frequency except 50 Hz. IEC 61869-9 suggests the 4800 Hz sample rate for general measuring and protective applications, regardless of the power system frequency.

CT1-A/B/C

- *Range: None, AC1 to AC16*
- *Default: AC1/AC2/AC3*

This setting specifies the sequence of Analog Channel (per phase) that is mapped to the CT-1 of the corresponding stream. An origin to CT Phase input defines the physical measurement input to the CT bank by mapping specific AC inputs from that merging unit (or SV message).

The fields are active when the ***SV Stream*** field is set to IEC 61869-9. The CT1 phases are available if the number of ***CT Channels*** is 4 or below. CT2 is added if ***CT Channels*** is 5 or higher.

The fields are set to the defaults and are read-only when the ***SV Stream*** field is set to IEC 61850-9-2LE.

CT1- N

- *Range: None, AC1 to AC16*
- *Default: AC4*

This setting specifies the Analog Channel that is mapped to the CT ground/neutral input. An origin to CT1-N input defines the physical measurement input to the CT bank by mapping specific AC inputs from that MU (or SV message). If the MU does not publish any CT1-N inputs, configure the setting as None.

In the EnerVista software, the CT Aux input setting only populates the current channels of that RxSV#.

This CT Aux input setting is active when the ***SV Stream*** field is set to IEC 61869-9.

This CT Aux input setting is set to AC4 and is read-only when the ***SV Stream*** is set to IEC 61850-9-2LE.

VT1-A/B/C

- *Range: None, AC1 to AC16*
- *Default: AC5/AC6/AC7*

This setting specifies the Analog Channel (per phase) that is mapped to the VT1- phase inputs. An origin to VT Phase input defines the physical measurement input to the VT bank by mapping specific AC inputs from that MU (or SV message). If the MU does not publish any VT channels, configure the setting as None.

The VT1 phase fields are active when the ***SV Stream*** field is set to IEC 61869-9. The VT1 phases are available if the number of ***VT Channels*** is 4 or below. VT2 is added if ***VT Channels*** is 5 or higher.

The fields are set to the defaults and are read-only when the ***SV Stream*** field is set to IEC 61850-9-2LE.

VT1-N

- *Range: None, AC1 to AC16*
- *Default: AC8*

This setting specifies the Analog Channel that is mapped to the VT Aux/neutral input. An origin to VT input defines the physical measurement input to the VT bank by mapping specific AC inputs from that MU (or SV message). If the MU does not publish any VT1-N inputs, configure the setting as None.

In the EnerVista software, the VT Aux input setting only populates the voltage channels of that RxSV#.

The VT1-N input setting is active when the ***SV Stream*** field is set to IEC 61869-9.

The VT1-N input setting is set to the default and is read-only when the SV Stream field is set to IEC 61850-9-2LE.

AC BANKS

The UR platform supports up to six AC Banks. They can be CT or VT banks (similar to ***SETTINGS > SYSTEM SETUP > AC INPUTS > CURRENT/VOLTAGE BANK***). That is, each AC Bank can be configured either as current or voltage (not both). If configured as current, inapplicable voltage settings (such as VT ratio, VT secondary) are inactive. Similarly, if a bank is configured as voltage, current settings (such as CT primary, CT secondary) are inactive. In addition, bank level redundancy (that is, Origin-1 and Origin-2) is supported using crosschecking of each channel signal received from two different SV streams that are connected to the same electrical point on the primary power system. A maximum 24 channels can be configured to the AC Banks.

Click the button to display or hide the fields.

The following settings are available for each AC bank.

Each Phase Origin setting consumes three phase channels Ia/Va, Ib/Vb, or Ic/Vc, and a Neutral Origin setting consumes one ground or Aux Channel In/Vn, which means that

- An AC Bank with Phase Origin1 and Neutral Origin1 settings configured consumes four channels
- An AC Bank with both Phase Origin 1 and Phase Origin 2 and both Neutral Origin 1 and Neutral Origin 2 settings configured consumes eight channels

A maximum of 24 channels can be configured to the AC Banks.

For changes in this section, restart the relay, for example using ***Maintenance > Reboot Relay Command***.

Phase Origin 1, 2

- *Range: None, RxSV1-CT1/PHS, RxSV1-VT1/PHS to RxSV8-CT1/PHS, RxSV8-VT1/PHS*
- *Default: None*

An origin to an AC bank defines the physical measurement input to the bank by mapping specific AC inputs from a specific MU to the bank.

The UR Process Bus Module provides for the reliability of AC values for protection, metering, and oscillography by allowing duplicate origins of AC data. An origin is considered unavailable when set to None. If origin 1 is available,

the relay uses the values from origin 1 for protection, metering, and oscillography. Otherwise if origin 2 is available, the relay uses the values from origin 2. If both origins are unavailable, then the bank AC values are forced to zero to prevent ambiguity of measurement.

With crosschecking, the relay can use different origins. See the ***Crosschecking*** setting for information regarding automatic protection blocking possibilities on loss of one or both origins.

The two-phase origins in an AC bank must be of the same type and connected to the same electrical point in the primary power system. The two origins must be two currents with the same CT settings, or two voltages with the same VT settings. The current/voltage type of the phase and auxiliary origins must also match on each AC bank. It is intended that the origin AC inputs measure the same primary quantity with the same ratio. The same ratio and connection settings are applied to both origins.

Neutral Origin 1, 2

- *Range: None, RxSV1-CT1/NTR, RxSV1-VT1/ NTR to RxSV8-CT1/NTR, RxSV8-VT1/ NTR*
- *Default: None*

These settings specify the field units that are the origins of the auxiliary input IN or VN. Duplicate auxiliary origins are supported in the same way as phase origins.

The two auxiliary origins in an AC bank must be of the same type. The two origins must be two currents with the same CT secondary setting, or two voltages. The current/voltage type of the phase and auxiliary origins also must match on each AC bank. It is intended that the origin AC inputs measure the same primary quantity with the same ratio. The same ratio and connection settings are applied to both origins.

Crosschecking

- *Range: None, Depend Origin-1 Pref, Depend Origin-2 Pref*
- *Default: None*

The crosschecking feature allows application-level redundancy by checking between two independent SV streams from the same electrical connection of the instrument transformers. In addition to the network redundancy provided by PRP/HSR, the UR Process Bus Module allows the relay to communicate with redundant merging units.

When set to None, crosschecking is disabled. Use this on a non-protection-critical AC bank, such as one used for a synchrocheck voltage. GE strongly recommends setting it to None when redundancy is not supported at the merging unit level; otherwise the "ACBank# Orig1(2) In Use" operand status is inaccurate.

Origin preference is supported in case of discrepancy in dependability mode. This allows testing (secondary injection) or replacement of an MU that is configured to non-preferred origin without affecting protection functions since these functions are using a preferred origin stream when online. As such, dependability with Origin-1 preference allows continued use of Origin-1 in case of discrepancy between both online origin stream sampled values. Similarly, dependability with Origin-2 preference allows continued use of Origin-2 in case of discrepancy between both online origin stream sampled values.

The table shows how the Crosschecking setting, the availability of AC bank origins, and discrepancy checks determine whether protection is blocked. Blocked here means only protection elements. It does not inhibit metering, actual values, oscillography, or other functions.

When set to Depend Origin-1 Pref, protection is blocked if there is no good signal from both the Origin-1 and Origin-2 sources. When both the merging unit sources are good, the preference is given always for Origin-1. When the preferred MU sources fails, the alternate MU source is used for protection and measurement.

When set to Depend Origin-2 Pref, protection is blocked if there is no good signal from both the Origin-1 and Origin-2 sources. When both the merging unit sources are good, the preference is given always for Origin-2. When the preferred MU sources fails, the alternate MU source is used for protection and measurement.

> *Note:*
> *While switching from a preferred to non-preferred channel, the protection functions are delayed for two cycles. While switching back to a preferred channel, the protection functions are delayed for one cycle.*

Crosschecking and protection behavior

Crosschecking setting	Origin-1 RxSV stream status	Origin-2 RxSV stream status	Discrepancy check	Protection operation
None	Not relevant	Not relevant	No check	Normal
Depend Origin-1 Pref	Not mapped	Not mapped	No check	Normal
	Online	Online	OK / discrepant	Normal using Origin-1 stream
	Online	Offline	No check	Normal using Origin-1 stream
	Offline	Online	No check	Normal using Origin-2 stream
	Offline	Offline	No check	Blocked
Depend Origin-2 Pref	Not mapped	Not mapped	No check	Normal
	Online	Online	OK / discrepant	Normal using Origin-2 stream
	Online	Offline	No check	Normal using Origin-1 stream
	Offline	Online	No check	Normal using Origin-2 stream
	Offline	Offline	No check	Blocked

Origin1 becomes offline and switches to Origin2 for the following reasons:

- When more than three of five frame samples received are invalid or a frame with sequence number is received after three consecutive missed frames for any channel of origin. The reason for invalid frames can be any of the following reasons:
  - If one or more AmpSv.q or VolSv.q attribute(s) are invalid from the assigned SV frame channels to the AC bank origin
  - When “Quality Check” is set to 'Reject questionable' data, the data with q.validity = questionable is processed as invalid
  - When the relay is in-service or the test function is Disabled, the SV data with q.test set to TRUE is processed invalid
  - When received SV frames with Sim Bit TRUE, the frame is invalid unless the value of @Master/LPHD1.Sim.stVal is true (that is Settings > Simulation > GOOSE/SV > Accept Sim GOOSE&SV or Settings > Simulation > Subscribe to Simulated Values > Simulation Mode is set to Enabled)
  - If the value of @Master/LPHD1.Sim.stVal is TRUE, once a subscribed SV messages with simulation bit TRUE are received, subscribed SV messages with simulation bit FALSE are invalid until @Master/LPHD1.Sim.stVal is set to FALSE
  - SV streams with “SmpSync” value out of the following specified ranges are rejected:
  - i. When the “SmpSynch Check” is set to “Global” (2), SV streams with “SmpSynch” value set to Global (2) are accepted
  - ii. When the “SmpSynch Check” is set to “Local” (1), SV streams with “SmpSynch” value set to Global (2) or Local (1) are accepted
  - iii. When the “SmpSynch Check” is set to “Any” (0 to 254), SV streams with “SmpSynch” value set in the range of 0 to 254 are accepted. For 7.80 version, the accepted range is 0 to 127.
- SV frames are delayed/not received for more than 1.9 power system cycles

The selected Origin quality will be the quality of the AC Bank.

If both Origins have invalid quality, then the AC Bank data is marked as invalid and does not participate in protection.

Phase/Ground CT Primary

- *Range: 1 to 65000 A insteps of 1*
- *Default: 1*

Enter the rated CT primary current value in Amperes. For 1000:5 and 1000:1 CTs, enter 1000.

Phase/Ground CT Secondary

- *Range: 1A, 5A*
- *Default: 1A*

Enter the rated CT secondary current value in Amperes. For correct operation, the CT secondary rating must match the setting (that must also correspond to the specific CT connections used).

Phase CT Polarity

- *Range: Standard, Inverted-3ph, Inverted Ph-A, Inverted Ph-B, Inverted Ph-C*
- *Default: Standard*

If CTs are wired with the correct polarity in all phases, i.e. CT polarity reversal is not required, “Standard” should be selected. If CT polarity is incorrect in just one phase, then select “Inverted Ph-A (B or C)”; choosing the affected phase. If CT polarities of all three phases are incorrect, select “Inverted-3Ph” to correct the CT polarities for all three phases. It should be noted that the oscillography record will capture the CTs current signal as applied to the relay terminal irrespective of this setting. This ensures correct relay behavior when recorded oscillography is played back to the relay.

Ground CT Polarity

Range: Standard, Inverted

Default: Standard

If the ground CT is wired with the correct polarity, select “Standard” for this setting. If the Ground CT polarity is incorrect, then select “Inverted” to correct it. It should be noted that the oscillography record will capture ground CT current signal as applied to the relay terminal irrespective of this setting. This ensures the correct relay behavior when recorded oscillography is played back to the relay.

It is important that the settings ***PHASE CT POLARITY*** and ***GROUND CT POLARITY*** are set to the correct values before putting the relay into operation. Selecting the wrong value or changing this setting whilst relay is in operation would result in undesirable operation of the protection and control functions.

If you intend to use the crosschecking functionality (redundancy at MU level), then this setting should be used carefully to ensure that CT Polarity is the same on both MUs on each phase/neutral channel.

SIGNAL SOURCES

Click the button to display or hide the fields. The first six Sources are the platform sources and can accept both current banks and voltage banks and are associated with AC bank 1 to 6. The first six sources allow current summation for phase and auxiliary CTs.

Recycle power to the relay when changing a source.

Name

- *Range: up to 20 alphanumeric characters*
- *Default: SRC 1*

This setting specifies an alphanumeric name for the source.

Phase CT

- *Range: None, B1, B2, B3, B4, B5, B6, B1+B2, ... B1+B2+B3+B4+B5+B6 or B7...B28*
- *Default: None*

This setting selects the phase CTs of an AC bank or the sum of the phase CTs of multiple AC banks to be the phase current of the source. That is, it select the AC Banks section above in the window.

If you see the message "the AC Bank x assigned...is not configured..," it means that you need to configure the AC Banks section in the software window before setting this field. The AC Bank selected can match the Origins fields

and Sources, such as a Phase CT set at B1 with Phase Origin 1 RxSV1-CT1/PHS and source SRC1. Another example is to use Phase CT set at B2 with Phase Origin 1 RxSV2-CT1/PHS and source SRC2.

Ground CT

- *Range: None, B1, B2, B3, B4, B5, B6, B1+B2, ... B1+B2+B3+B4+B5+B6 or B7...B28*
- *Default: None*

This setting selects the ground CTs of an AC bank or the sum of the ground CTs of multiple AC banks to be the ground current of the source. That is, it selects the AC Banks section above in the window.

Phase VT

- *Range: None, B1, B2, B3, B4, B5, B6*
- *Default: None*

This setting selects the phase VTs of an AC bank to be the phase voltages of the source.

Alt Phase CT

- *Range: None, B1, B2, B3, B4, B5, B6, B1+B2, ... B1+B2+B3+B4+B5+B6 or B7...B28*
- *Default: None*

This setting is for switching between main and alternate sources. It selects the alternate phase CTs of an AC bank or the sum of the phase CTs of multiple AC banks to be the phase current of the source.

Alt Ground CT

- *Range: None, B1, B2, B3, B4, B5, B6, B1+B2, ... B1+B2+B3+B4+B5+B6 or B7...B28*
- *Default: None*

This setting is for switching between main and alternate sources. It selects the ground CTs of an AC bank or the sum of the ground CTs of multiple AC banks to be the ground current of the source.

Switch Alt CT

- *Range: FlexLogic operand*
- *Default: Off*

This setting is for switching the alternate source on or off.

Alt Phase VT

- *Range: None, B1, B2, B3, B4, B5, B6*
- *Default: None*

This setting is for switching between main and alternate sources. It selects the phase VTs of an AC bank to be the phase voltages of the source.

Alt Aux VT

- *Range: None, B1, B2, B3, B4, B5, B6*
- *Default: None*

This setting is for switching between main and alternate sources. It selects the auxiliary VT input of an AC bank to be the auxiliary voltage of the source.

Switch Alt VT

- *Range: FlexLogic operand*
- *Default: Off*

This setting is for switching the alternate source on or off.

CHAPTER 10

ACTUAL VALUES

10.1 CHAPTER OVERVIEW

This chapter contains the following sections:

Chapter Overview	803
Actual Values Menu	804
Front panel	805
Status	807
Metering	820
Remote resources	841
Process Bus Module	842
Records	849
Product information	856

10.2 ACTUAL VALUES MENU

■ ■ ACTUAL VALUES ■ ■	⇔	■ ■ ACTUAL VALUES ■ ■ FRONT PANEL	
	⇕	■ ■ ACTUAL VALUES ■ ■ STATUS	
	ô	■ ■ ACTUAL VALUES ■ ■ METERING	
	⇕	■ ■ ACTUAL VALUES ■ ■ REMOTE RESOURCES	Not L60
	⇕	■ ■ ACTUAL VALUES ■ ■ PB MODULE	Not B90, C30, L60
	⇕	■ ■ ACTUAL VALUES ■ ■ RECORDS	
	⇧	■ ■ ACTUAL VALUES ■ ■ PRODUCT INFO	

10.3 FRONT PANEL

Basic and Enhanced

You can view the front panel using the EnerVista software (for example to view an error message displayed on the front panel). You cannot however, change the settings using this view.

To view the front panel in EnerVista software:

1. Click **Actual Values > Front Panel**.
2. Click the pushbutton or LCD area to enlarge it.

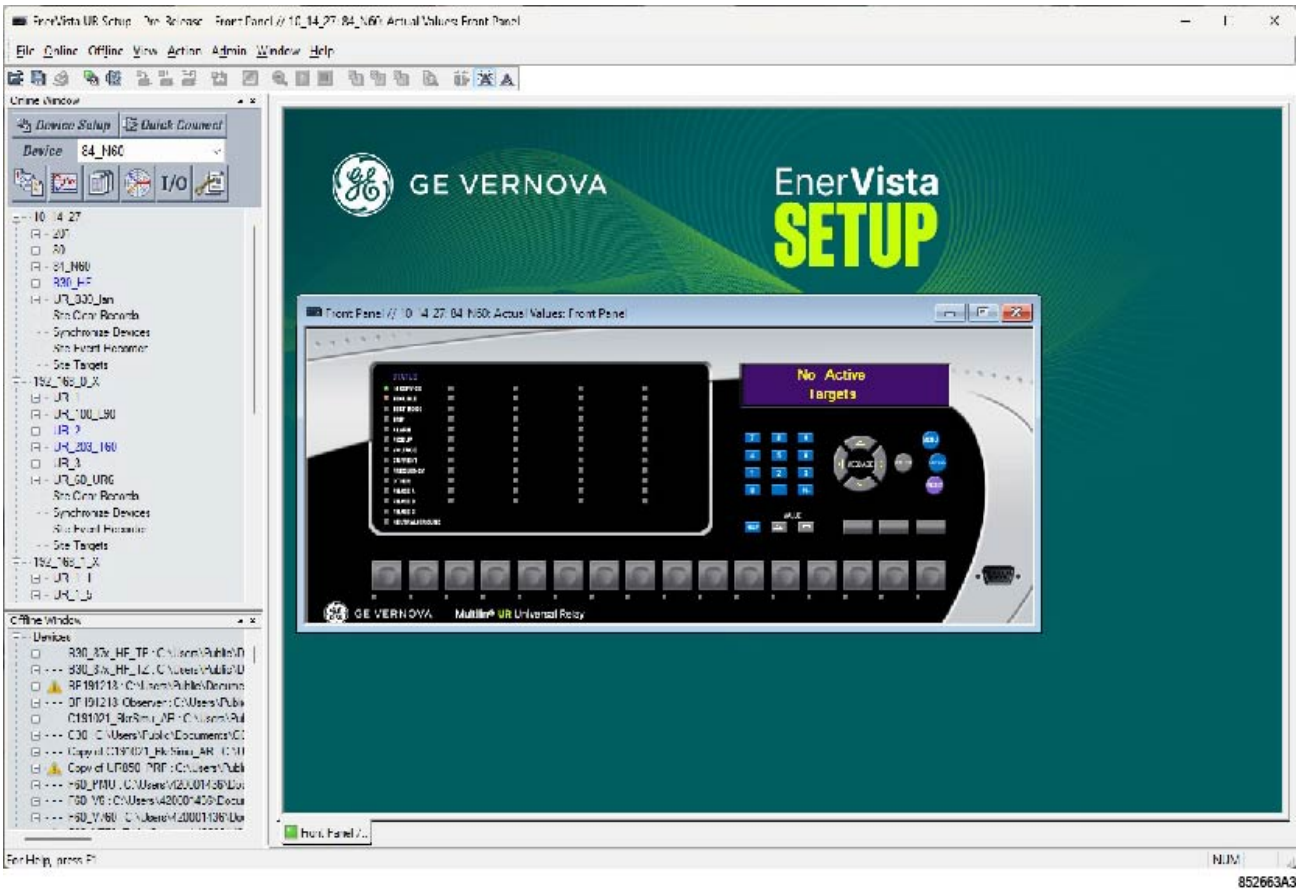

Figure 406: Front panel use in the software

Graphical front panel

> *Note:*
> *The graphical front panel is a hardware option.*

Using the graphical front panel, You can acknowledge and reset Annunciator alarms, as well as view LEDs and pushbuttons.

To view alarms for the graphical front panel in EnerVista:

1. Access **Actual Values > Graphical Panel > Annunciator Panel**. Alarms are listed, allowing remote acknowledgement/reset.
2. Click the **Acknowledge** or **Reset** button for an alarm.

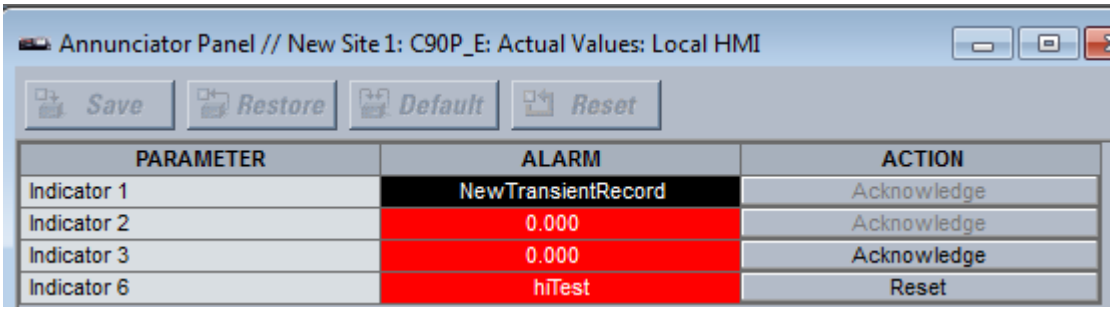

Figure 407: Annunciator alarms displayed in the software

To view LEDs and pushbuttons on the graphical front panel in EnerVista:

1. **Access Actual Values > Graphical Panel > LEDs** or **Pushbuttons**.

10.4 STATUS

10.4.1 IED

ACTUAL VALUES > STATUS > IED

■ IED ■	⇔	IED BEHAVIOUR: On	Range: On, Test, Test Blocked
	⇧	SIMULATION MODE STATUS: Disabled	Range: Disabled, Enabled Displays with IEC 61850

IED BEHAVIOUR

Displays the ***SETTINGS > TESTING > IED MODE CONFIG > IED MODE*** value.

SIMULATION MODE STATUS

Displays the ***SETTINGS > SIMULATION > SUBSCRIBE TO SIMULATED VALUES > SIMULATION MODE*** value, meaning if simulation mode is enabled or disabled on a device.

10.4.2 CONTACT INPUTS

ACTUAL VALUES > STATUS > CONTACT INPUTS

■ CONTACT INPUTS ■	⇔	Cont Ip <n> On	Range: On,Off

The present status of the contact inputs is shown here. The first line of a message display indicates the ID of the contact input. For example, *Cont Ip 1* refers to the contact input in terms of the default name-array index. The second line of the display indicates the logic state of the contact input.

10.4.3 VIRTUAL INPUTS

ACTUAL VALUES > STATUS > CONTACT INPUTS

■ VIRTUAL INPUTS ■	⇔	Virt Ip <n> On	Range: On,Off n = 1 to 128

The present status of the 128 virtual inputs is shown here. The first line of a message display indicates the ID of the virtual input. For example, *Virt Ip 1* refers to the virtual input in terms of the default name. The second line of the display indicates the logic state of the virtual input.

10.4.4 RXGOOSE BOOLEAN INPUTS

ACTUAL VALUES > STATUS > RxGOOSE BOOLEANS

■ RxGOOSE BOOLEANS ■	⇔	RxGOOSE BOOLEAN 1 STATUS: Off	Range: On,Off n = 1 to 256

This menu displays when the product includes an IEC 61850 software option.

10.4.5 RXGOOSE DPS INPUTS

ACTUAL VALUES > STATUS > RxGOOSE DPS

■ RxGOOSE DPS ■	⇔	RxGOOSE DPS <n> STATUS: Off	Range: On,Off n = 1 to 128 (apart from B90 where n = 16)

This menu displays when the product includes an IEC 61850 software option.

10.4.6 TELEPROTECTION INPUTS

ACTUAL VALUES > STATUS TELEPROTECTION INPUTS

■ TELEPROTECTION ■ INPUTS	⇔	TELEPROTECTION INPUT 1-<n>: Off	Range: On n = 1 to 16
	⇧	TELEPROTECTION INPUT 2-<n>: Off	Range: On n = 1 to 16

The present state of teleprotection inputs from communication channels 1 and 2 are shown here. The state displayed is that of corresponding remote output unless the channel is declared failed.

10.4.7 CONTACT OUTPUTS

ACTUAL VALUES > STATUS > CONTACT OUTPUTS

■ CONTACT OUTPUTS ■	⇔	Cont Op <n> On	Range: On, Off, VOff, VOn, IOn, IOff

The present state of the contact outputs is shown here. The first line of a message display indicates the ID of the contact output. For example, *Cont Op 1* refers to the contact output in terms of the default name-array index. The second line of the display indicates the logic state of the contact output.

For form-A contact outputs, the state of the voltage and current detectors is displayed as Off, VOff, IOff, On, IOn, and VOn. For form-C contact outputs, the state is displayed as Off or On.

10.4.8 VIRTUAL OUTPUTS

ACTUAL VALUES > STATUS > CONTACT OUTPUTS

■ VIRTUAL OUTPUTS ■	⇔	Virt Op <n> On	Range: On,Off n = 1 to 256

The present state of each virtual output displays here. The first line of a message display indicates the ID of the virtual output. For example, *Virt Op 1* refers to the virtual output in terms of the default name-array index. The second line of the display indicates the logic state of the virtual output, as calculated by the FlexLogic equation for that output.

10.4.9 RXGOOSE STATUS

ACTUAL VALUES > STATUS > RxGOOSE DPS

■ RxGOOSE ■ STATUS	⇔	All RxGOOSE Online: Yes	Range: Yes, No
	⇧	RxGOOSE <n> Status: Offline	Range: Online, Offline n = 1 to 64

This menu displays when the product includes an IEC 61850 software option.

The ***All RxGOOSE Online*** actual value does not consider RxGOOSE that are not configured or are not used by any RxGOOSE Input.

If fixed GOOSE is configured, the ***All RxGOOSE Online*** actual value reflects the status of both the configurable GOOSE subscriptions and the fixed GOOSE subscriptions. For ***All RxGOOSE Online*** status to have the value *"Yes"*, all ***RxGOOSE x Status*** actual values must be *Online* and the fixed GOOSE All Remote Devices Online status must have the value *Yes*.

10.4.10 RXGOOSE STATISTICS

ACTUAL VALUES > STATUS > RxGOOSE STATISTICS > RxGOOSE 1(64)

Note:
Only RxGOOSE 1 is shown

■ RxGOOSE 1 ■	⇔	RxGOOSE 1 stNum 0	Range: 0 up to 4,294,967,295
	⇧	RxGOOSE 1 sqNum 0	Range: 0 up to 4,294,967,295: Online, Offline

This menu displays when the product includes an IEC 61850 software option.

stNum

State number. The most recently received value in GOOSE message field stNum. The publisher increments stNum each time that the state of one or more of the GOOSE message members is sent with a revised value.

sqNum

Sequence number. The most recently received value in GOOSE message field sqNum. The publisher sets sqNum to zero each time the state of one or more of the GOOSE message members is sent with a new value, and it increments it whenever a GOOSE message is resent without any member value change.

10.4.11 FIXED GOOSE

Remote Devices

ACTUAL VALUES > STATUS > FIXED GOOSE > REMOTE DEVICES STATUS

■ REMOTE DEVICE ■ STATUS	⇔	ALL REMOTE DEVICES ONLINE: Yes	Range: Yes, No
	⇧	REMOTE DEVICE <n> STATUS: Off	Range: On, Off n = 1 to 16

Displays the present state of the programmed remote devices.

ALL REMOTE DEVICES ONLINE

Indicates whether all programmed devices are online or not. If the state is `No`, then at least one required remote device is not online.

ACTUAL VALUES > STATUS > FIXED GOOSE > REMOTE DEVICES STATISTICS > REMOTE DEVICE 1(16)

> *Note:*
> *Only REMOTE DEVICE 1 is shown.*

■ REMOTE DEVICE 1 ■	⇔	REMOTE DEVICE 1 stNum: 0	Range: 0 to 4,294,967,295
	⇧	REMOTE DEVICE 1 sqNum: 0	Range: 0 to 4,294,967,295

REMOTE DEVICES 1 stNum

This indicates the most recently received value in the received Fixed GOOSE message field stNum (state number). The publisher increments stNum each time that the state of one or more of the Fixed GOOSE message members is sent with a revised value.

REMOTE DEVICES 1 sqNum

This indicates the most recently received value in the received Fixed GOOSE message field sqNum (sequence number). The publisher sets sqNum to zero each time the state of one or more of the GOOSE message members is sent with a new value, and it increments it whenever a Fixed GOOSE message is resent without any member value change. This number rolls over to zero when the maximum count of 4,294,967,295 is reached.

Remote inputs

ACTUAL VALUES > STATUS > FIXED GOOSE > REMOTE INPUTS > REMOTE INPUT 1(32)

> *Note:*
> *Only REMOTE INPUT 1 is shown*

■ REMOTE INPUTS ■	⇔	REMOTE INPUT 1 STATUS Off	Range: On, Off

10.4.12 DIGITAL COUNTERS

ACTUAL VALUES > STATUS > DIGITAL COUNTERS > DIGITAL COUNTERS Counter <n>

> *Note:*
> *Only Counter 1 is shown*

■ DIGITAL COUNTERS ■ Counter 1	⇔	Counter 1 ACCUM: 0	
	⇕	Counter 1 FROZEN: 0	
	⇕	Counter 1 FROZEN: 1970/01/01 00:00:00	Range: YYYY/MM/DD HH:MM:SS
	⇑	Counter 1 MICROS: 0	Range: 0 to 4294967295 in steps of 1

The present status of the digital counters displays here. The status of each counter, with the user-defined counter name, includes the accumulated and frozen counts (the count units label also appears). Also included, is the date and time stamp for the frozen count. The ***COUNTER 1 MICROS*** value refers to the microsecond portion of the time stamp.

10.4.13 BREAKER STATUS

ACTUAL VALUES > STATUS > BREAKERS

■ BREAKERS ■	⇔	BREAKER <n> ΦA/3P STATE: N/A	Range: N/A, Opened, Closed, Alert
	⇕	BREAKER <n> ΦB/3P STATE: N/A	Range: N/A, Opened, Closed, Alert
	⇑	BREAKER <n> ΦC/3P STATE: N/A	Range: N/A, Opened, Closed, Alert

`N/A` is shown when ***BREAKER 1 FUNCTION*** is disabled.

`Closed` is shown when the breaker is closed.

`Opened` is shown when the breaker is opened.

`Alert` is the state that represents one of the following breaker conditions:

- Bad
- Intermediate
- Racked-out
- Out of Service
- Pole Discrepancy
- Trouble

10.4.14 SELECTOR SWITCHES

ACTUAL VALUES > STATUS > SELECTOR SWITCHES

■ SELECTOR SWITCHES ■	⇔	SELECTOR SWITCH 1 POSITION: 0/7	Range: Current Position / 7

⇧	SELECTOR SWITCH 2 POSITION: 0/7	Range: Current Position / 7

The display shows both the current position and the full range. The current position only (an integer from 0 through 7) is the actual value.

10.4.15 FLEX STATES

ACTUAL VALUES > STATUS > FLEX STATES

■ FLEX STATES ■	⇔	PARAM <n>: Off Off	Range: On,Off n = 1 to 256

There are 256 FlexState bits available. The second line value indicates the state of the given FlexState bit.

10.4.16 ETHERNET

ACTUAL VALUES > STATUS > ETHERNET

■ ETHERNET ■	⇔	ETHERNET PRI LINK STATUS: Fail	Range: Fail, OK
	⇧	ETHERNET SEC LINK STATUS: OK	Range: Fail, OK
	⇧	ETHERNET TER LINK STATUS: Fail	Range: Fail, OK

These values indicate the status of the first, second, and third Ethernet ports.

10.4.17 REAL TIME CLOCK SYNCHRONIZING

ACTUAL VALUES > STATUS > TIME SYNC

■ REAL TIME CLOCK ■ SYNCHRONIZING	⇔	RTC SYNC SOURCE: None	Range: None, Port 1(3) PTP Clock, IRIG-B, Other, Process Bus Module Clock, SNTP1, SNTP2: On, Off
	⇧	GRANDMASTER ID: 0000000000000000	Range: any 8 octet value
	⇧	ACCURACY: 999999999 ns	Range: 0 to 999,999,999 ns
	⇧	PBM SW1 PTP State: DISABLED	Range: Disabled, No Signal, Calibrating, Synchronized, Qualifying, Idea, Master
	⇧	PBM SW2 PTP State: DISABLED	Range: Disabled, No Signal, Calibrating, Synchronized, Qualifying, Idea, Master
	⇧	PORT 1 PTP STATE: No Signal	Range: Disabled, No Signal, Calibrating, Synch'd (No Pdelay), Synchronized, Synch'd (Inv UTCoff), Synch'd (Nopd INVoff)

⇕	PORT 2 PTP STATE: No Signal	Range: Disabled, No Signal, Calibrating, Synch'd (No Pdelay), Synchronized, Synch'd (Inv UTCoff), Synch'd (Nopd INVoff)
⇕	PORT 3 PTP STATE: No Signal	Range: Disabled, No Signal, Calibrating, Synch'd (No Pdelay), Synchronized, Synch'd (Inv UTCoff), Synch'd (Nopd INVoff)
⇕	PTP - IRIG-B DELTA: 500000000 ns	Range: -500,000,000 to +500,000,000 ns
⇕	Last LeapSec Dir None	None, Positive, Negative
⇧	Last LeapSec Date 1970/01/01	Date: YYYY/MM/DD

Note:
This menu displays when the product includes an IEEE 1588 software option.

RTC SYNC SOURCE

This is the time synchronizing source the relay is using at present. Possible sources include Port 1 PTP Clock to Port 3 PTP Clock. A value of Other means a less precise source (IEC 103, IEC 104, Modbus, DNP). An actual value displays when the relay includes the IEEE 1588 software option.

Note:
When the SYNCHRONIZING SOURCE setting in ***Settings > Product Setup > Real Time Clock*** *is set to* `PBM Clock`*, the* ***RTC SYNC SOURCE*** *should also be set to* `Process Bus Module Clock`*.*

GRANDMASTER ID

This is the grandmaster identity code being received from the present PTP grandmaster, if any. When the relay is not using any PTP grandmaster, this actual value is zero. The grandmaster identity code is specified by PTP to be globally unique, so one can always know which clock is grandmaster in a system with multiple grandmaster-capable clocks.

ACCURACY

This is the estimated maximum time error at present in the RTC, considering the quality information embedded in the received time signal. The value 999,999,999 indicates that the magnitude of the estimated error is one second or more, or that the error cannot be estimated.

PORT 1…3 PTP STATE

This is the present state of the port's PTP clock. The PTP clock state is:

- `DISABLED`: The PTP function setting is disabled. With all other values, the PTP function is enabled.
- `NO SIGNAL`: No signal from an active master has been found.
- `CALIBRATING`: An active master has been selected but is not yet locked in.
- `Synch'd (No Pdelay)`: This value is shown if the port is synchronized, but the peer delay mechanism is non-operational

- *SYNCH'D(INV UTCOff)*: This value is shown if the signal is synchronized to the PTP master but with ***currentUtcOffsetValid*** = `False`
- *Synch'd (Nopd INVoff)*: This value is shown if the port is synchronized, but the peer delay mechanism is non-operational and PTP master has ***currentUtcOffsetValid*** = `False`
- *SYNCHRONIZED*: The signal is synchronized.

PTP - IRIG-B DELTA

This is the time difference, measured in nanoseconds, between the fractional seconds portion of the time being received via PTP and that being received via IRIG-B. A positive value indicates that PTP time is fast compared to IRIG-B time.

Last LeapSec Dir

This shows the direction of the last leap second.

- *None*: No leap second history
- *Positive*: Last leap second is positive and leap second is added
- *Negative*: Last leap second is negative and leap second is removed

Last LeapSec Date

This shows the date on which the last leap second was adjusted

> *Note:*
> *Note: These actual values are non-volatile and persisted across reboots.*

10.4.18 DIRECT INPUTS

ACTUAL VALUES > STATUS > DIRECT INPUTS

■ DIRECT INPUTS ■	⇔	AVERAGE MSG RETURN TIME CH1: 0 ms
	⇕	UNRETURNED MSG COUNT CH1: 0
	⇕	CRC FAIL COUNT CH1: 0
	⇕	AVERAGE MSG RETURN TIME CH2: 0 ms
	⇕	UNRETURNED MSG COUNT CH2: 0
	⇕	CRC FAIL COUNT CH2: 0
	⇑	DIRECT INPUT <n> On

n = model dependent

AVERAGE MSG RETURN TIME

This the time taken for direct output messages to return to the sender in a direct input/output ring configuration (this value is not applicable for non-ring configurations). This is a rolling average calculated for the last ten messages. There are two return times for dual-channel communications modules.

UNRETURNED MSG COUNT

These values (one per communications channel) count the direct output messages that do not make the trip around the communications ring.

CRC FAIL COUNT

These values (one per communications channel) count the direct output messages that have been received but fail the CRC check. High values for either of these counts can indicate on a problem with wiring, the communication channel, or one or more relays. The ***UNRETURNED MSG COUNT*** and ***CRC FAIL COUNT*** values can be cleared using the ***CLEAR DIRECT I/O COUNTERS*** command.

DIRECT INPUT <n>

These values represent the state of each direct input.

10.4.19 DIRECT DEVICES STATUS

ACTUAL VALUES > STATUS > DIRECT DEVICES STATUS

■ DIRECT DEVICES ■ STATUS	⇔	DIRECT DEVICE <n> STATUS: Offline	Range: Offline, Online n= 1 to 16

These actual values represent the state of direct devices 1 through 16

10.4.20 TELEPROTECTION CHANNEL TESTS

ACTUAL VALUES > STATUS > TIME SYNC

■ TELEPROT CH TESTS ■	⇔	CHANNEL 1 STATUS: n/a	Range: n/a, FAIL, OK
	⇕	CHANNEL 1 LOST PACKETS: 1	Range: 1 to 65535 in steps of 1
	⇕	CHANNEL 2 STATUS: n/a	Range: n/a, FAIL, OK
	⇕	CHANNEL 2 LOST PACKETS: 1	Range: 1 to 65535 in steps of 1
	⇧	VALIDITY OF CHANNEL CONFIGURATION: FAIL	Range: n/a, FAIL, OK

The status information for two channels is shown here.

CHANNEL 1 STATUS

This represents the receiver status of each channel. If the value is *OK*, teleprotection is enabled and data is being received from the remote terminal; If the value is *FAIL*, teleprotection enabled and data is not being received from the remote terminal. If *n/a*, teleprotection is disabled.

CHANNEL 1 LOST PACKETS

Data is transmitted to the remote terminals in data packets at a rate of two packets per cycle.

The number of lost packets represents data packets lost in transmission; this count can be reset to 0 through the ***COMMANDS > CLEAR RECORDS*** menu.

VALIDITY OF CHANNEL CONFIGURATION

This value displays the current state of the communications channel identification check, and hence validity. If a remote relay ID does not match the programmed ID at the local relay, the *FAIL* message displays. The *N/A* value appears if the local relay ID is set to a default value of *0*, the channel is failed, or if the teleprotection inputs/outputs are not enabled.

10.4.21 REMAINING CONNECTION STATUS

ACTUAL VALUES > STATUS > CHANNEL TESTS

■ COMM STATUS ■ REMAINING CONNECT	⇔	MMS TCP (max 6) 6	Range: 0 to 6
	⇕	Modbus TCP (max 4) 4	Range: 0 to 4
	⇕	DNP TCP (max 2) 2	Range: 0 to 2
	⇕	IEC-104 TCP (max 2) 2	Range: 0 to 2
	⇕	PMU TCP 1	Range: 1 to 4 Relays with PMU option only
	⇧	SFTP (max 4) 4	Range: 0 to 4

These values specify the remaining number of TCP connections still available for each protocol. The display depends on the options applicable to your device. Each time a connection is used, the remaining number of connections decrements. When released, the remaining number of connections increments. If no connection is made over the specific protocol, the number equals the maximum number available for the specific protocol.

For example, the maximum number of Modbus TCP connections is 4. Once an EnerVista session is opened on a computer connected to the UR over Ethernet, the Modbus TCP status shows 3. If the EnerVista application is closed, the Modbus TCP status shows 4.

For the graphical front panel, the remaining connections refer to TCP connections only.

MMS TCP

The number of IEC 61850 connections remaining.

PMU TCP (relays with PMU only)

The maximum number of PMU TCP connections matches the number of aggregators. The maximum number of aggregators for the N60 is 4. The maximum number for the C60 is 2. The maximum number is 1 for other products with a PMU. The remaining number of aggregators displays here.

10.4.22 PARALLEL REDUNDANCY PROTOCOL (PRP)

ACTUAL VALUES > STATUS > CHANNEL TESTS

■ PRP STATUS ■	⇔ Total Rx Port A: 0	Range: 0 to 4G, blank if PRP disabled
	⇕ Total Rx Port B: 0	Range: 0 to 4G, blank if PRP disabled
	⇕ Total Errors Port A: 0	Range: 0 to 4G, blank if PRP disabled
	⇕ Total Errors Port B: 0	Range: 0 to 4G, blank if PRP disabled
	⇕ Mismatches Port A: 0	Range: 0 to 4G, blank if PRP disabled
	⇕ Mismatches Port B: 0	Range: 0 to 4G, blank if PRP disabled
	⇕ FER Port A: 0	Range: 0 t0 4G
	⇕ FER Port B: 0	Range: 0 t0 4G
	⇕ Link Active Port A: No	Range: Yes, No
	⇧ Link Active Port B: No	Range: Yes, No

Note:
This menu displays when the product includes a PRP software option.

Total Rx Port A

This is a counter for total messages received (either from DANPs or from SANs) on port A.

Total Rx Port A

This is a counter for total messages received (either from DANPs or from SANs) on port A.

Total Errors Port A

This a counter for total messages received with an error (bad port code, frame length too short) on port A.

Total Errors Port A

This a counter for total messages received with an error (bad port code, frame length too short) on port B.

Mismatches Port A

This is a counter for total messages received with an error on Port A (PRP frame, but port received through and LAN ID in the frame do not match).

Mismatches Port B

This is a counter for total messages received with an error on Port B (PRP frame, but port received through and LAN ID in the frame do not match).

Link Active Port A

This shows whether the link on port A is active or not.

Link Active Port A

This shows whether the link on port A is active or not.

10.4.23 TXGOOSE STATUS

ACTUAL VALUES > STATUS > TxGOOSE STATUS

■ TxGOOSE ■ STATUS	⇔	R-TxGOOSE <n> ARP: Off	Range: On, Off n = 1 to 16

> *Note:*
> *This menu displays when the product includes an IEC 61850 software option.*

This status is relevant to R-GOOSE reception when configured for SSM or ASM reception modes. It is not relevant for GOOSE or for R-GOOSE in unicast reception mode.

ARP

The unicast mode of R-GOOSE transmission requires Address Resolution Protocol (ARP) for the resolution of the network layer address into the MAC layer address. R-TxGOOSE <n> ARP status On indicates that ARP responses are being received and the destination MAC address for R-GOOSE transmissions has been obtained. This status remains Off if TxGOOSE <n> is not configured for R-GOOSE. It also remains Off if setting R-TxGOOSE1 DST IP is set to a multicast address. In the case where setting R-TxGOOSE1 DST IP is configured with a unicast address and this status indicates Off, TxGOOSE <n> transmission will be off, and therefore communication network diagnosis needs to be carried out.

This status is only applicable for R-GOOSE transmission with setting R-TxGOOSE1 DST IP set to a unicast IP address. It is not applicable for GOOSE or for R-GOOSE when setting R-TxGOOSE1 DST IP is multicast.

10.4.24 PROTOCOL

ACTUAL VALUES > STATUS > PROTOCOL

■ PROTOCOL ■	⇔	IEC61850 EDITION: Edition2	Range: Edition1, Edition2

Note:
This menu displays when the product includes an IEC 61850 software option.

This displays the IEC 61850 edition currently being used, as set under ***Settings > Product Setup > Communications > Protocol > IEC61850 Edition***.

10.5 METERING

10.5.1 METERING CONVENTIONS

UR convention for measuring power and energy

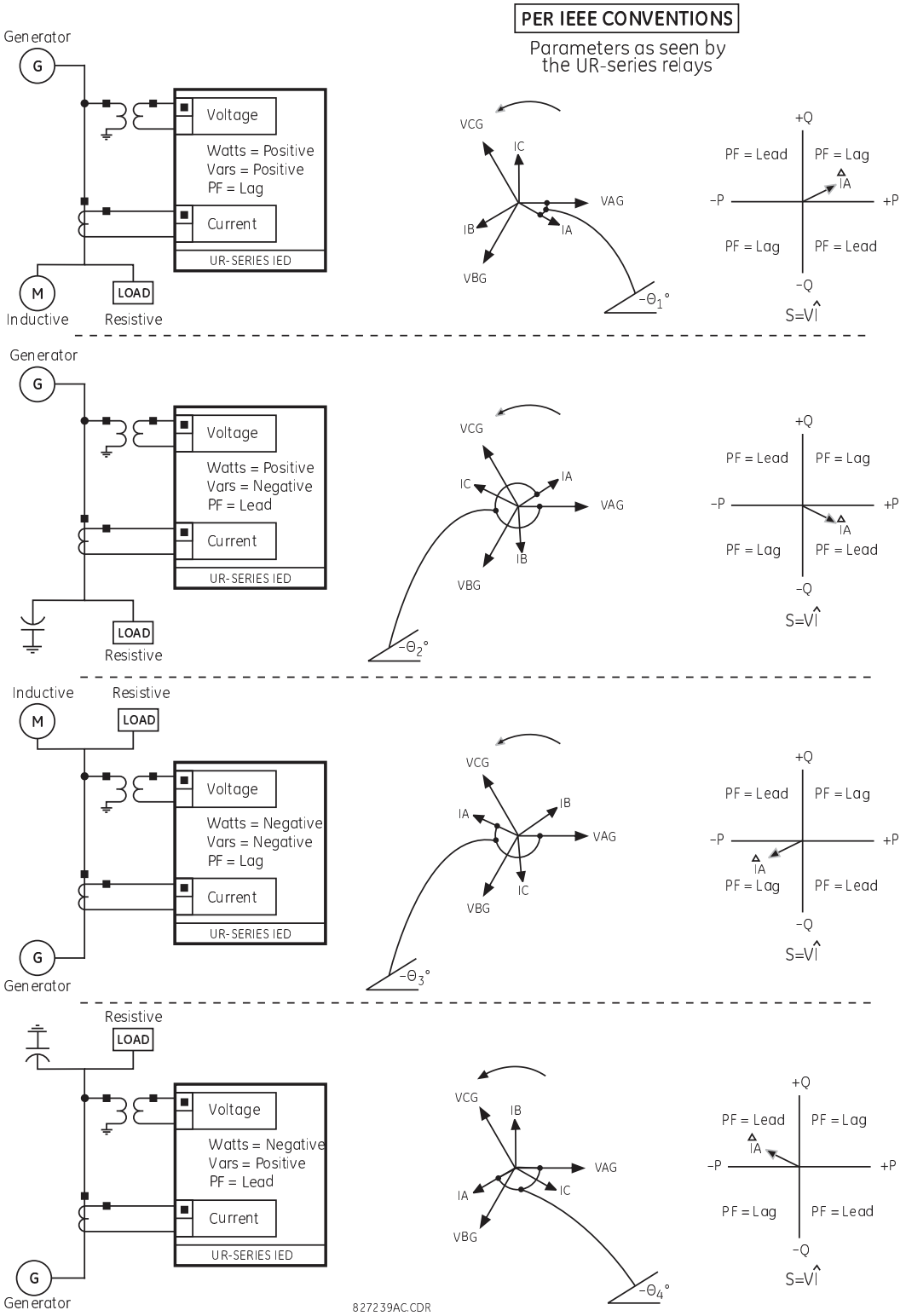

Figure 408: Flow direction of signed values for watts and VARs

UR convention for measuring phase angles

All phasors calculated by URs and used for protection, control and metering functions are rotating phasors that maintain the correct phase angle relationships with each other at all times.

For display and oscillography purposes, all phasor angles in a given relay are referred to an AC input channel pre-selected by the ***SETTINGS > SYSTEM SETUP > POWER SYSTEM > FREQUENCY AND PHASE REFERENCE*** setting. This setting defines a particular AC signal source to be used as the reference.

The relay first determines if any Phase VT bank is indicated in the source. If it is, voltage channel VA of that bank is used as the angle reference. Otherwise, the relay determines if any Aux VT bank is indicated; if it is, the auxiliary voltage channel of that bank is used as the angle reference. If neither of the two conditions is satisfied, then two more steps of this hierarchical procedure to determine the reference signal include Phase CT bank and Ground CT bank.

If the AC signal pre-selected by the relay upon configuration is not measurable, the phase angles are not referenced. The phase angles are assigned as positive in the leading direction, and are presented as negative in the lagging direction, to more closely align with power system metering conventions. The figure illustrates this.

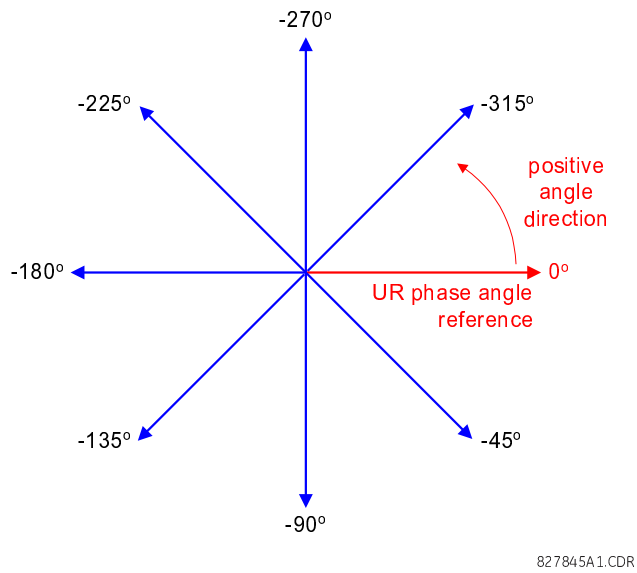

Figure 409: UR phase angle measurement convention

UR convention for symmetrical components

The URs calculate voltage symmetrical components for the power system phase A line-to-neutral voltage, and symmetrical components of the currents for the power system phase A current. Owing to the above definition, phase angle relations between the symmetrical currents and voltages stay the same irrespective of the connection of instrument transformers. This is important for setting directional protection elements that use symmetrical voltages.

For display and oscillography purposes the phase angles of symmetrical components are referenced to a common reference as described previously.

Wye-connected instrument transformers

ABC rotation:

$$V_0 = (V_{AG} + V_{BG} + V_{CG})/3$$

$$V_1 = (V_{AG} + aV_{BG} + a^2V_{CG})/3$$

$$V_2 = (V_{AG} + a^2V_{BG} + aV_{CG})/3$$

ACB rotation

$$V_0 = (V_{AG} + V_{BG} + V_{CG})/3$$

$$V_1 = (V_{AG} + a^2V_{BG} + aV_{CG})/3$$

$$V_2 = (V_{AG} + aV_{BG} + a^2V_{CG})/3$$

Swapping out V for I, the above equations also apply to currents.

Delta-connected instrument transformers

ABC rotation

$$V_0 = N/A$$

$$V_1 = 1\angle\text{-}30°(V_{AB} + aV_{BC} + a^2V_{CA})/3\sqrt{3}$$

$$V_2 = 1\angle 30°(V_{AB} + a^2V_{BC} + aV_{CA})/3\sqrt{3}$$

ACB rotation

$$V_0 = N/A$$

$$V_1 = 1\angle 30°(V_{AB} + a^2V_{BC} + aV_{CA})/3\sqrt{3}$$

$$V_2 = 1\angle -30°(V_{AB} + aV_{BC} + a^2V_{CA})/3\sqrt{3}$$

The zero-sequence voltage is not measurable under the Delta connection of instrument transformers and is defaulted to zero. The table below shows an example of symmetrical components calculations for the ABC phase rotation.

Symmetrical components calculation example

SYSTEM VOLTAGES, sec. V *						VT conn.	relay INPUTS, sec. V			SYMM. COMP, sec. V		
VAG	VBG	VCG	VAB	VBC	VCA		F5ac	F6ac	F7ac	V0	V1	V2
13.9 ∠ 0°	76.2 ∠–125°	79.7 ∠–250°	84.9 ∠–313°	138.3 ∠–97°	85.4 ∠–241°	WYE	13.9 ∠0°	76.2 ∠–125°	79.7 ∠–250°	19.5 ∠–192°	56.5 ∠–7°	23.3 ∠–187°
UNKNOWN (only V1 and V2 can be determined)			84.9 ∠0°	138.3 ∠–144°	85.4 ∠–288°	DELTA	84.9 ∠0°	138.3 ∠–144°	85.4 ∠–288°	N/A	56.5 ∠–54°	23.3 ∠–234°

In this example, the power system voltages are phase-referenced to VAG and VAB, respectively. This, however, is a relative matter. It is important to remember that the Product displays are always referenced as specified under ***SETTINGS > SYSTEM SETUP > POWER SYSTEM > FREQUENCY AND PHASE REFERENCE***.

The example above is illustrated in the following figure.

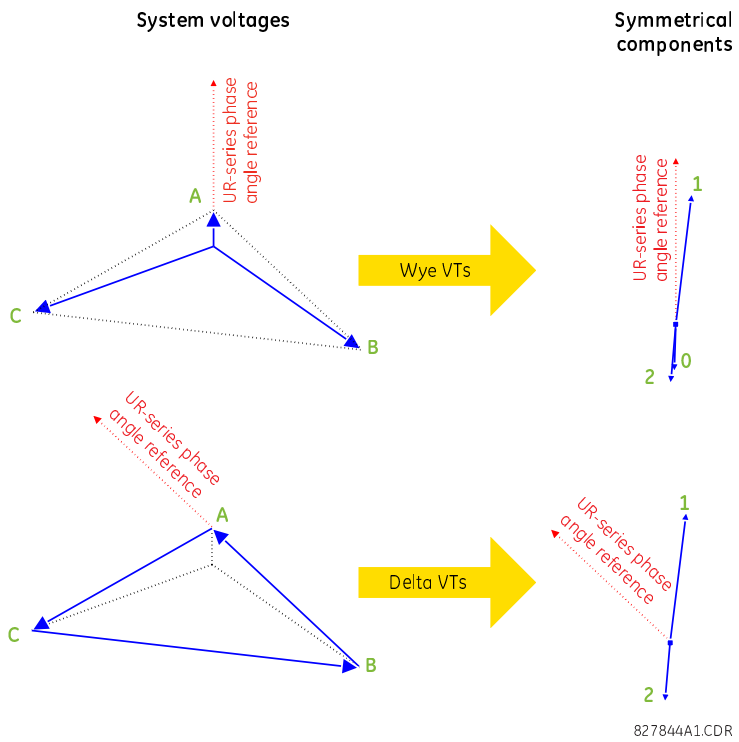

Figure 410: Measurement convention for symmetrical components

10.5.2 SOURCES

This menu displays the metered values available for each source.

Metered values presented for each source depend on the phase and auxiliary VTs and phase and ground CTs assignments for this particular source. For example, if no phase VT is assigned to this source, then any voltage, energy, and power values are unavailable.

10.5.2.1 PHASE CURRENT METERING

ACTUAL VALUES > METERING > SOURCE SRC 1 > PHASE CURRENT

■ PHASE CURRENT ■ SRC 1	⇔	SRC 1 RMS Ia: 0.000 b: 0.000 c: 0.000 kA
	⇕	SRC 1 RMS Ia: 0.000 kA
	⇕	SRC 1 RMS Ib: 0.000 kA
	⇕	SRC 1 RMS Ic: 0.000 kA
	⇕	SRC 1 RMS In: 0.000 kA
	⇕	SRC 1 PHASOR Ia: 0.000 kA 0.0°

⇕	SRC 1 PHASOR Ib: 0.000 kA 0.0°
⇕	SRC 1 PHASOR Ic: 0.000 kA 0.0°
⇕	SRC 1 PHASOR In: 0.000 kA 0.0°
⇕	SRC 1 ZERO SEQ I0: 0.000 kA 0.0°
⇕	SRC 1 POS SEQ I1: 0.000 kA 0.0°
⇧	SRC 1 NEG SEQ I2: 0.000 kA 0.0°

The metered values are displayed in this menu. The `SRC 1` text gets replaced by whatever name was programmed by the user for the associated source (see ***SETTINGS > SYSTEM SETUP > SIGNAL SOURCES***).

10.5.2.2 GROUND CURRENT METERING

ACTUAL VALUES > METERING > SOURCE SRC 1 > GROUND CURRENT

■ GROUND CURRENT ■ SRC 1	⇔	SRC 1 RMS Ig: 0.0 A
	⇕	SRC 1 PHASOR Ig: 0.0 A 0.0°
	⇧	SRC 1 PHASOR Igd: 0.000 kA 0.0°

The metered values are displayed in this menu. The `SRC 1` text gets replaced by whatever name was programmed by the user for the associated source (see ***SETTINGS > SYSTEM SETUP > SIGNAL SOURCES***).

10.5.2.3 PHASE VOLTAGE METERING

ACTUAL VALUES > METERING > SOURCE SRC 1 > PHASE VOLTAGE

■ PHASE VOLTAGE ■ SRC 1	⇔	SRC 1 RMS Vag: 0.0 V
	⇕	SRC 1 RMS Vbg: 0.0 V
	⇕	SRC 1 RMS Vcg: 0.0 V
	⇕	SRC 1 PHASOR Vag: 0.0 V 0.0°

⇕	SRC 1 PHASOR Vbg: 0.0 V 0.0°
⇕	SRC 1 PHASOR Vcg: 0.0 V 0.0°
⇕	SRC 1 RMS Vab: 0.0 V
⇕	SRC 1 RMS Vbc: 0.0 V
⇕	SRC 1 RMS Vca: 0.0 V
⇕	SRC 1 PHASOR Vab: 0.0 V 0.0°
⇕	SRC 1 PHASOR Vbc: 0.0 V 0.0°
⇕	SRC 1 PHASOR Vca: 0.0 V 0.0°
⇕	SRC 1 ZERO SEQ V0: 0.0 V 0.0°
⇕	SRC 1 POS SEQ V1: 0.0 V 0.0°
⇧	SRC 1 NEG SEQ V2: 0.0 V 0.0°

The metered values are displayed in this menu. The `SRC 1` text gets replaced by whatever name was programmed by the user for the associated source (see ***SETTINGS > SYSTEM SETUP > SIGNAL SOURCES***).

10.5.2.4 AUXILIARY VOLTAGE METERING

ACTUAL VALUES > METERING > SOURCE SRC 1 > AUXILIARY VOLTAGE

■ AUXILIARY VOLTAGE ■ SRC 1	⇔	SRC 1 RMS Vx: 0.00 V
	⇧	SRC 1 RMS Vx: 0.00 V

The metered values are displayed in this menu. The `SRC 1` text gets replaced by whatever name was programmed by the user for the associated source (see ***SETTINGS > SYSTEM SETUP > SIGNAL SOURCES***).

10.5.2.5 POWER METERING

ACTUAL VALUES > METERING > SOURCE SRC 1 > POWER

■ POWER ■ SRC 1	⇔	SRC 1 REAL POWER 3φ: 0.000 kW
	⇕	SRC 1 REAL POWER φa: 0.000 kW
	⇕	SRC 1 REAL POWER φb: 0.000 kW
	⇕	SRC 1 REAL POWER φc: 0.000 kW
	⇕	SRC 1 REACTIVE PWR 3φ: 0.000 kvar
	⇕	SRC 1 REACTIVE PWR φa: 0.000 kvar
	⇕	SRC 1 REACTIVE PWR φb: 0.000 kvar
	⇕	SRC 1 REACTIVE PWR φc: 0.000 kvar
	⇕	SRC 1 APPARENT PWR 3φ: 0.000 kVA
	⇕	SRC 1 APPARENT PWR φa: 0.000 kVA
	⇕	SRC 1 APPARENT PWR φb: 0.000 kVA
	⇕	SRC 1 APPARENT PWR φc: 0.000 kVA
	⇕	SRC 1 POWER FACTOR 3φ: 1.000
	⇕	SRC 1 POWER FACTOR φa: 1.000
	⇕	SRC 1 POWER FACTOR φb: 1.000
	⇑	SRC 1 POWER FACTOR φc: 1.000

The metered values are displayed in this menu. The `SRC 1` text gets replaced by whatever name was programmed by the user for the associated source (see ***SETTINGS > SYSTEM SETUP > SIGNAL SOURCES***).

When VTs are configured in wye, the relay calculates power in each phase and three-phase power is measured as:

$$S = V_A \times \hat{I}_A + V_B \text{ x } \hat{I}_B + V_C \times \hat{I}_C$$

When VTs are configured in delta, the Product does not calculate power in each phase and three-phase power is measured as:

$$S = V_{AB} \times \hat{I}_A + V_{CB} \times \hat{I}_C$$

where:

- S is the apparent power
- V_A, V_B, V_C, I_A, I_B, I_C are phase voltage and phase current phasors
- V_{AB} and V_{CB} are phase-to-phase voltage phasors
- Î is the conjugate of I

10.5.2.6 ENERGY METERING

ACTUAL VALUES > METERING > SOURCE SRC 1 > ENERGY

■ ENERGY ■ SRC 1	⇔	SRC 1 POS WATTHOUR: 0.000 MWh
	⇕	SRC 1 NEG WATTHOUR: 0.000 Wh
	⇕	SRC 1 POS VARHOUR: 0.000 varh
	⇑	SRC 1 NEG VARHOUR: 0.000 mvarh

The metered values are displayed in this menu. The `SRC 1` text gets replaced by whatever name was programmed by the user for the associated source (see ***SETTINGS > SYSTEM SETUP > SIGNAL SOURCES***).

Because energy values are accumulated, record them and then reset them immediately prior to changing CT or VT characteristics.

10.5.2.7 DEMAND METERING

ACTUAL VALUES > METERING > SOURCE SRC 1 > DEMAND

■ DEMAND ■ SRC 1	⇔	SRC 1 DMD IA: 0.000 kA
	⇕	SRC 1 DMD IA MAX: 0.000 kA
	⇕	SRC 1 DMD IA DATE: 2020/07/31 16:30:07
	⇕	SRC 1 DMD IB: 0.000 kA
	⇕	SRC 1 DMD IB MAX: 0.000 kA

⇕	SRC 1 DMD IB DATE: 2020/07/31 16:30:07
⇕	SRC 1 DMD IC: 0.000 kA
⇕	SRC 1 DMD IC MAX: 0.000 kA
⇕	SRC 1 DMD IC DATE: 2020/07/31 16:30:07
⇕	SRC 1 DMD W: 0.000 kW
⇕	SRC 1 DMD W MAX: 0.000 kW
⇕	SRC 1 DMD W DATE: 2020/07/31 16:30:07
⇕	SRC 1 DMD VAR: 0.000 kvar
⇕	SRC 1 DMD VAR MAX: 0.000 kvar
⇕	SRC 1 DMD VAR DATE: 2020/07/31 16:30:07
⇕	SRC 1 DMD VAR DATE: 2020/07/31 16:30:07
⇕	SRC 1 DMD VA MAX: 0.000 kVA
⇕	SRC 1 DMD VA DATE: 2020/07/31 16:30:07

The metered values are displayed in this menu. The `SRC 1` text gets replaced by whatever name was programmed by the user for the associated source (see ***SETTINGS > SYSTEM SETUP > SIGNAL SOURCES***).

The relay measures (absolute values only) the source demand on each phase and average three phase demand for real, reactive, and apparent power. These parameters can be monitored to reduce supplier demand penalties or for statistical metering purposes. Demand calculations are based on the measurement type selected in the ***SETTINGS > PRODUCT SETUP > DEMAND*** menu. For each quantity, the relay displays the demand over the most recent demand time interval, the maximum demand since the last maximum demand reset, and the time and date stamp of this maximum demand value. Maximum demand quantities can be reset to zero with the ***CLEAR RECORDS > CLEAR DEMAND RECORDS*** command.

10.5.2.8 FREQUENCY METERING

ACTUAL VALUES > METERING > SOURCE SRC 1 > FREQUENCY

■ FREQUENCY ■ SRC 1	⇔	SRC 1 FREQUENCY: 0.000 Hz

The metered values are displayed in this menu. The `SRC 1` text gets replaced by whatever name was programmed by the user for the associated source (see ***SETTINGS > SYSTEM SETUP > SIGNAL SOURCES***).

SOURCE FREQUENCY is measured via software-implemented zero-crossing detection of an AC signal. The signal is either a Clarke transformation of three-phase voltages or currents, auxiliary voltage, or ground current as per source configuration (see the ***SYSTEM SETUP > POWER SYSTEM*** settings). The signal used for frequency estimation is low-pass filtered. The final frequency measurement is passed through a validation filter that eliminates false readings due to signal distortions and transients.

10.5.2.9 CURRENT HARMONICS AND THD METERING

ACTUAL VALUES > METERING > SOURCE SRC 1 > CURRENT HARMONICS

■ CURRENT HARMONICS ■ SRC 1	⇔	SRC 1 THD Ia: 0.0 Ib: 0.0 Ic: 0.0%
	⇕	SRC 1 2ND Ia: 0.0 Ib: 0.0 Ic: 0.0%
	⇕	SRC 1 3RD Ia: 0.0 Ib: 0.0 Ic: 0.0%
	⇓	
	⇑	SRC 1 25TH Ia: 0.0 Ib: 0.0 Ic: 0.0%

The metered values are displayed in this menu. The `SRC 1` text gets replaced by whatever name was programmed by the user for the associated source (see ***SETTINGS > SYSTEM SETUP > SIGNAL SOURCES***).

Current harmonics are measured for each source for the total harmonic distortion (THD) and 2nd to 25th harmonics per phase.

10.5.2.10 VOLTAGE HARMONICS AND THD METERING

ACTUAL VALUES > METERING > SOURCE SRC 1 > VOLTAGE HARMONICS

■ VOLTAGE HARMONICS ■ SRC 1	⇔	SRC 1 THD Va: 0.0 Vb: 0.0 Vc: 0.0%
	⇕	SRC 1 2ND Va: 0.0 Vb: 0.0 Vc: 0.0%
	⇕	SRC 1 3RD Va: 0.0 Vb: 0.0 Vc: 0.0%
	⇓	

⇧

```
SRC 1 25TH Va: 0.0
Vb: 0.0 Vc: 0.0%
```

The metered values are displayed in this menu. The `SRC 1` text gets replaced by whatever name was programmed by the user for the associated source (see ***SETTINGS > SYSTEM SETUP > SIGNAL SOURCES***).

This menu displays metered voltage harmonics values. The “SRC 1” text is replaced by the programmed name for the associated source (see the SETTINGS ðò SYSTEM SETUP ðò SIGNAL SOURCES menu).

To extract the 2nd to 25th voltage harmonics, each harmonic is computed on a per-phase basis, where:

- N = 64 is the number of samples per cycle
- $\omega 0 = 2\pi f$ is the angular frequency based on the system frequency (50 or 60 Hz)
- k = 1, 2,..., N – 1 is the index over one cycle for the Fast Fourier Transform (FFT)
- m is the last sample number for the sliding window
- h = 1, 2,..., 25 is the harmonic number

The short-time Fourier transform is applied to the unfiltered signal:

$$F_{real}(m,h) = \frac{2}{N}\sum_{k}(f(m-k)\cdot\cos(h\cdot\omega_0\cdot t(k)))$$

$$F_{imag}(m,h) = \frac{2}{N}\sum_{k}(f(m-k)\cdot\sin(h\cdot\omega_0\cdot t(k)))$$

$$F_{ampl}(m,h) = \sqrt{F_{real}(m,h)^2 + F_{imag}(m,h)^2}$$

The harmonics are a percentage of the fundamental signal obtained as a ratio of harmonic amplitude to fundamental amplitude multiplied by 100%. The total harmonic distortion (THD) is the ratio of the total harmonic content to the fundamental:

$$THD = \sqrt{F_2^2 + F_3^2 + \ldots + F_{25}^2}$$

Voltage harmonics are not available on Product relays configured with the high-impedance fault detection (Hi-Z) feature.

Voltage harmonics are calculated only for Wye connected phase VTs. Ensure that the ***SYSTEM SETUP > AC INPUTS > VOLTAGE BANK F5 > PHASE VT <n> CONNECTION*** setting is `Wye` to enable voltage harmonics metering.

10.5.3 SYNCHROCHECK

ACTUAL VALUES > METERING > SOURCE SRC 1 > SYNCHROCHECK<n>

> *Note:*
> *Only SYNCHROCHECK 1 is shown*

```
■ SYNCHROCHECK1
■ SRC 1
```

⇔

```
SYNCHROCHECK 1 DELTA
VOLT: 0.000 kV
```

⇕

```
SYNCHROCHECK 1 DELTA
FREQ: 0.000 Hz
```

⇕

```
SYNCHROCHECK 1 DELTA
PHASE: 0.0°
```

⇕	SYNCHROCHECK 1 SYNSCP D_PH: 0.0°
⇕	SYNCHROCHECK 1 V1 MAG: 0.0 V
⇕	SYNCHROCHECK 1 V1 MAG: 0.0 V
⇕	SYNCHROCHECK 1 V2 MAG: 0.0 V
⇕	SYNCHROCHECK 1 V2 ANG: 0.0°
⇕	SYNCHROCHECK 1 PROJ V2 MAG: 0.0 V
⇕	SYNCHROCHECK 1 PROJ V2 ANG: 0.0°
⇕	SYNCHROCHECK 1 PROJ DELTA PHASE: 0.0°
⇧	SYNCHROCHECK 1 PROJ SYNSCP D_PH: 0.0°

If synchrocheck or a setting is disabled, the corresponding actual values menu item does not display.

10.5.4 TRACKING FREQUENCY

ACTUAL VALUES > METERING > TRACKING FREQUENCY

■ TRACKING FREQUENCY ■ SRC 1	⇔	TRACKING FREQUENCY: 60.00 Hz
	⇕	ACTIVE FREQ AND PHS REF: MAIN
	⇕	MAIN REF FREQUENCY: 60.00 Hz
	⇧	ALT REF FREQUENCY: 60.00 Hz

The Tracking Frequency and the Active Frequency and Phase Reference are metered as shown here. The tracking frequency is calculated from the signals defined in the Active Frequency and Phase Reference. Note that based on the signal availability and the settings defined in the Main and Alternate Frequency and Phase Reference, the Active Frequency and Phase Reference might be switched between main and alternate frequency reference in runtime.

The frequency calculated in main and alternate reference respectively are also metered as shown here. They will be displayed as 0 if the signal in this reference is lost or it’s not configured.

10.5.5 FLEXELEMENTS

ACTUAL VALUES > METERING > FLEXELEMENTS FLEXELEMENT 1(16)

> *Note:*
> ***Only FLEXELEMENT 1 is shown***

■ DIRECTIONAL ■ POWER 1	⇔	FLEXELEMENT 1 OpSig: 0.000

The operating signals for the FlexElements are displayed in pu values using the following definitions of the base units.

Base unit	Description	Applicable models
87L SIGNALS (Local IA Mag, IB, and IC) (Diff Curr IA Mag, IB, and IC) (Terminal 1 IA Mag, IB, and IC) (Terminal 2 IA Mag, IB and IC)	IBASE = maximum primary RMS value of the +IN and –IN inputs (CT primary for source currents, and 87L source primary current for line differential currents)	L30, L90
87L SIGNALS (Op Square Curr IA, IB, and IC) (Rest Square Curr IA, IB, and IC)	BASE = Squared CT secondary of the 87L source	L30, L90
BREAKER ACC ARCING AMPS (Brk X Acc Arc Amp A, B, and C)	BASE = 2000 kA2 × cycle	All but B90, DC30, N60
BREAKER ARCING AMPS (Brk X Arc Amp A, B, and C)	BASE = 1 kA2 × cycle	All but B90, DC30, N60
BUS DIFFERENTIAL RESTRAINING CURRENT (Bus Diff Mag)	IBASE = maximum primary RMS value of the +IN and –IN inputs (CT primary for source currents, and bus reference primary current for bus differential currents)	B30
BUS DIFFERENTIAL RESTRAINING CURRENT (Bus Rest Mag)	IBASE = maximum primary RMS value of the +IN and – IN inputs (CT primary for source currents, and bus reference primary current for bus differential currents)	B30
CURRENT UNBALANCE (Amp Unbalance)	BASE = 100%	M60
DCmA	BASE = maximum value of the DCMA INPUT MAX setting for the two transducers configured under the +IN and –IN inputs.	All models
FAULT LOCATION	BASE = Line Length as specified in Fault Report	C60, C95, D30, D60, F35, F60, L30, L60, L90
FIELD CURRENT	IBASE = maximum value setting defined for the specific transducer input configured	G60
FIELD GROUND CURRENT	IBASE = 5 mA	G60
FIELD GROUND FAULT LOCATION	BASE = 100%	G60
FIELD GROUND INJECTED VOLTAGE	VBASE = 15 V	G60
FIELD GROUND RESISTANCE	RBASE = 250 KΩ	G60
FIELD VOLTAGE	VBASE = 500 V	G60

Base unit	Description	Applicable models
FREQUENCY	fBASE = 1 Hz	All models
FREQUENCY RATE OF CHANGE	df/dtBASE = 1 Hz/s	D30, D60, F60, G30, G60, L30, L90, N60, T60
PHASE ANGLE	jBASE = 360 degrees (see the UR angle referencing convention)	All models
POWER FACTOR	PFBASE = 1.00	All models
RTDs	BASE = 100°C	All models
SENSITIVE DIR POWER (Sns Dir Power)	PBASE = maximum value of 3 × VBASE × IBASE for the +IN and –IN inputs of the sources configured for the sensitive power directional element(s).	C60, C95, D60, G30, G60, L90, M60, N60, T60
SOURCE CURRENT	IBASE = maximum nominal primary RMS value of the +IN and –IN inputs	All models
SOURCE ENERGY (Positive and Negative Watthours, Positive and Negative Varhours)	EBASE = 10000 MWh or MVAh, respectively	B30, C60, C95, D60, F35, F60, G30, G60, L90, M60, N60, T60
SOURCE POWER	PBASE = maximum value of VBASE × IBASE for the +IN and –IN inputs	All models
SOURCE THD & HARMONICS	BASE = 1%	C70, D60, F35, F60, G30, G60, L90, N60, T60
SOURCE VOLTAGE	VBASE = maximum nominal primary RMS value of the +IN and –IN inputs	All models
STATOR DIFFERENTIAL CURRENT (Stator Diff Iar, Ibr, and Icr)	IBASE = maximum primary RMS value of the +IN and –IN inputs (CT primary for source currents, and bus reference primary current for bus differential currents)	G60, M60
STATOR GROUND 3RD HARMONIC VOLTAGES (Stator Gnd Vn/V0 3rd)	VBASE = Primary auxiliary voltage of the STATOR GROUND SOURCE	G30, G60
STATOR GROUND RESISTANCE	RBASE = 10 KΩ	G60
STATOR GROUND SUB-HARMONIC VOLTAGE	VBASE = nominal secondary voltage of auxiliary VT for the stator ground source	G60
STATOR GROUND SUB-HARMONIC CURRENT	IBASE = ground CT primary current of stator ground source	G60
STATOR RESTRAINING CURRENT (Stator Diff Iad, Ibd, and Icd)	IBASE = maximum primary RMS value of the +IN and –IN inputs (CT primary for source currents, and bus reference primary current for bus differential currents)	G60, M60
SYNCHROCHECK (Max Delta Volts)	VBASE = maximum primary RMS value of all the sources related to the +IN and –IN inputs	B30, C60, C95, D30, D60, F60, G30, G60, L30, L60, L90, N60, T60
THERMAL MODEL (Model Capacity Used) (Model Motor Unbalance)	BASE =100%	M60
THERMAL MODEL (Model Lockout Time)	BASE = 10 minutes	M60
THERMAL MODEL (Thermal Model Load) (Biased Motor Load)	BASE = 1.00 pu of FLA	M60
THERMAL MODEL (Trip Time on Overload)	BASE = 10 seconds	M60
VOLTS PER HERTZ	BASE = 1.00 pu	G30, G60, L90, T60

Base unit	Description	Applicable models
XFMR DIFFERENTIAL CURRENT (Xfmr Iad, Ibd, and Icd Mag)	IBASE = maximum primary RMS value of the +IN and -IN inputs (CT primary for source currents, and transformer reference primary current for transformer differential currents)	G30, T35, T60
XFMR DIFFERENTIAL HARMONIC CONTENT (Xfmr Harm2 Iad, Ibd, and Icd Mag) (Xfmr Harm5 Iad, Ibd, and Icd Mag)	BASE = 100%	G30, T35, T60
XFMR RESTRAINING CURRENT (Xfmr Iar, Ibr, and Icr Mag)	IBASE = maximum primary RMS value of the +IN and -IN inputs (CT primary for source currents, and transformer reference primary current for transformer differential currents)	G30, T35, T60
ZBASE	ZBASE = PhaseVTSecondary / PhaseCTSecondary, where PhaseVTSecondary and PhaseCTSecondary are the secondary nominal voltage and the secondary nominal current of the distance source. In case multiple CT inputs are summed as one source current and mapped as the distance source, use the PhaseCTSecondary value from the CT with the highest primary nominal current. Distance source is specified in setting under ***SETTINGS > GROUPED ELEMENTS > SETTING GROUP 1(6) > DISTANCE***. PhaseVTSecondary and PhaseCTSecondary are specified in setting under ***SETTINGS > SYSTEM SETUP > AC INPUTS***.	D30, D60, G60, L60, L90, T60

10.5.6 RXGOOSE ANALOGS

ACTUAL VALUES > METERING > RxGOOSE Analogs

■ RxGOOSE
■ Analogs

⇔

RxGOOSE Analog <n>
0.000LEVEL:

n -= 1 to 32

⇧

RxGOOSE An1 ExpnSt:
Off

> *Note:*
> *This menu displays when the product includes an IEC 61850 software option.*

The RxGOOSE Analog values display in this menu. The RxGOOSE Analog values are received via IEC 61850 GOOSE messages sent from other devices.

10.5.7 SENSITIVE DIRECTIONAL POWER

ACTUAL VALUES > METERING > SOURCE SRC 1 > SENSITIVE DIRECTIONAL POWER > DIRECTIONAL POWER 1(2)

> *Note:*
> ***Only DIRECTIONAL POWER 1 is shown***

■ DIRECTIONAL ■ POWER 1	⇔	DIRECTIONAL POWER 1 3Φ: 0.0 kW

The effective operating quantities of the sensitive directional power elements display here. The display is useful to calibrate the feature by compensating the angular errors of the CTs and VTs with the use of the ***RCA*** and ***CALIBRATION*** settings.

10.5.8 WATTMETRIC GROUND FAULT

ACTUAL VALUES > METERING > PHASOR MEASURMENT UNIT > WATTMETRIC GROUND FAULT 1(2)

Note:
Only WATTMETRIC GROUND FAULT 1 is shown

■ WATTMETRIC ■ GROUND FAULT 1	⇔	WATT GND FLT 1: 0.000 W

This menu displays the wattmetric zero-sequence directional element operating power values.

10.5.9 PHASOR MEASUREMENT UNIT

ACTUAL VALUES > METERING > PHASOR MEASURMENT UNIT > PMU <n>

Note:
Only PMU 1 is shown

■ PMU 1 ■	⇔	PMU 1 VA: 0.000 V 0.00°	Range: Va or Vab per VT bank connection
	⇕	PMU 1 VB: 0.000 V 0.00°	Range: Vb or Vbc per VT bank connection
	⇕	PMU 1 VC: 0.000 V 0.00°	Range: Vc or Vca per VT bank connection
	⇕	PMU 1 VX: 0.000 V 0.00°	
	⇕	PMU 1 V1: 0.000 V 0.00°	
	⇕	PMU 1 V2: 0.000 V 0.00°	
	⇕	PMU 1 V0: 0.000 V 0.00°	Range: Substituted with zero if delta-connected VTs
	⇕	PMU 1 IA: 0.000 A 0.00°	

⇕	PMU 1 IB: 0.000 A 0.00°
⇕	PMU 1 IC: 0.000 A 0.00°
⇕	PMU 1 IG: 0.000 A 0.00°
⇕	PMU 1 I1: 0.000 A 0.00°
⇕	PMU 1 I2: 0.000 A 0.00°
⇕	PMU 1 I0: 0.000 A 0.00°
⇕	PMU 1 FREQUENCY: 0.000 Hz
⇕	PMU 1 df/dt: 0.00 Hz/s
⇧	PMU 1 CONFIG CHANGE COUNTER: 0 — Range: 0 to 65535

These actual values display without the corresponding time stamp as they become available per the recording rate setting. Also, the recording post-filtering setting is applied to these values.

10.5.10 PMU AGGREGATOR

ACTUAL VALUES > METERING > PHASOR MEASURMENT UNIT > PMU AGGREGATOR <n>

> *Note:*
> *Only PMU AGGREGATOR 1 is shown*

■ PMU AGGREGATOR 1 ■	⇔	PMU AGGREGATOR 1 PDU SIZE: 0

Actual values for the IEC 61850-90-5 PDU size are provided. These values allow you to know the approximate Ethernet frame size for the data streams from each aggregator. This can help to estimate network loading. The PDU size shown in the displays does not include the Ethernet, UDP, or IP layers. PDU sizes approaching approximately 1500 bytes result in fragmented data frames, causing increased network traffic.

10.5.11 TRANSDUCER INPUTS AND OUTPUTS

ACTUAL VALUES > METERING > TRANSDUCER I/O DCMA INPUTS □ DCMA INPUT <n>

■ DCMA INPUT <n> ■	⇔	DCMA INPUT <n> 0.000 mA

Actual values for each DCmA input channel that is enabled are displayed with the top line as the programmed channel ID and the bottom line as the value followed by the programmed units.

ACTUAL VALUES > METERING > TRANSDUCER I/O RTD INPUTS > RTD INPUT <n>

■ RTD INPUT <n> ■	⇔	RTD INPUT <n> -50 °C

Actual values for each RTD input channel that is enabled are displayed with the top line as the programmed channel ID and the bottom line as the value.

10.5.12 DISTANCE

ACTUAL VALUES > METERING > DISTANCE

■ DISTANCE ■	⇔	AB LOOP RESISTANCE RAB: 0.000 ohm
	⇕	AB LOOP REACTANCE XAB: 0.000 ohm
	⇕	AB LOOP IMPEDANCE ZAB: 0.000 ohm
	⇕	AB LOOP IMPEDANCE ANGLE: 0.0
	⇕	BC LOOP RESISTANCE RBC: 0.000 ohm
	⇕	BC LOOP REACTANCE XBC: 0.000 ohm
	⇕	BC LOOP IMPEDANCE ZBC: 0.000 ohm
	⇕	BC LOOP IMPEDANCE ANGLE: 0.0
	⇕	CA LOOP RESISTANCE RCA: 0.000 ohm
	⇕	CA LOOP REACTANCE XCA: 0.000 ohm
	⇕	CA LOOP IMPEDANCE ZCA: 0.000 ohm

⇕	CA LOOP IMPEDANCE ANGLE: 0.0
⇕	AG LOOP RESISTANCE RAG: 0.000 ohm
⇕	AG LOOP REACTANCE XAG: 0.000 ohm
⇕	AG LOOP IMPEDANCE ZAG: 0.000 ohm
⇕	AG LOOP IMPEDANCE ANGLE: 0.0
⇕	BG LOOP RESISTANCE RBG: 0.000 ohm
⇕	BG LOOP REACTANCE XBG: 0.000 ohm
⇕	BG LOOP IMPEDANCE ZBG: 0.000 ohm
⇕	BG LOOP IMPEDANCE ANGLE: 0.0
⇕	CG LOOP RESISTANCE RCG: 0.000 ohm
⇕	CG LOOP REACTANCE XCG: 0.000 ohm
⇕	CG LOOP IMPEDANCE ZCG: 0.000 ohm
⇑	CG LOOP IMPEDANCE ANGLE: 0.0

Loop impedance is defined as Z##=|Z##| Angle=R##+jX##, in secondary ohms and ## is the loop indication (AB, BC, CA, AG, BG, and CG respectively).

They are calculated as:

$$ZAB = \frac{VA - VB}{IA - IB} \qquad ZBC = \frac{VB - VC}{IB - IC} \qquad ZCA = \frac{VC - VA}{IC - IA}$$

per the following equations:

$$ZAG = \frac{VA}{IA + \left(\frac{Z0}{Z1} - 1\right) \times I0 + \frac{1}{3} \times \frac{Z0M}{Z1} \times IG} \qquad ZBG = \frac{VB}{IB + \left(\frac{Z0}{Z1} - 1\right) \times I0 + \frac{1}{3} \times \frac{Z0M}{Z1} \times IG} \qquad ZCG = \frac{VC}{IC + \left(\frac{Z0}{Z1} - 1\right) \times I0 + \frac{1}{3} \times \frac{Z0M}{Z1} \times IG}$$

where:

- VA, VB, VC are phase voltage phasors in secondary volts
- IA, IB, IC are current phasors in secondary amps
- I0 is the zero sequence current phasors in secondary amps
- IG is the ground current from the parallel line scaled to the source phase CT in secondary amps
- Z0/Z1 is the zero sequence impedance to positive sequence impedance ratio
- Z0M/Z1 is mutual zero sequence impedance to positive sequence impedance ratio, both are settings taken from the first enabled ground distance zone (count from zone 1 to 6)
- ZAG, ZBG, ZCG are calculated only if at least one ground distance zone is enabled; otherwise all the metering quantities for ground distance impedance (ZAG, ZBG, and ZCG) are reset to zero, including magnitude and angle. Note that VTs of the distance source must be connected in Wye if the ground distance element is enabled.

10.5.13 HARMONIC DETECTION

ACTUAL VALUES > METERING > HARMONIC DETECTION HARMONIC DETECTOR <n>

Note:
Only HARMONIC DETECTOR 1 is shown

■ HARMONIC DET 1 ■	⇔	HARMONIC DET 1 A: 0.0%
	⇕	HARMONIC DET 1 B: 0.0%
	⇕	HARMONIC DET 1 C: 0.0%
	⇕	HARMONIC DET 1 AVG: 0.0%
	⇧	HARMONIC DET 1 G: 0.0%

10.5.14 STATION BATTERY VOLTAGE

ACTUAL VALUES > METERING > STATION BATTERY VOLTAGE

■ STATION BATTERY ■ DC VOLTGE	⇔	BATTERY DC VOLT1: : 0 Vdc
	⇧	BATTERY DC VOLT2: 0 Vdc

10.5.15 MULTI-RANGE SIGNAL OSCILLATION DETECTOR (MSOD)

ACTUAL VALUES > METERING > MUTLI-RANGE SIGNAL OSCILL DETECTOR 1(2)

Note:
Only MSOD 1 is shown

■ MULTI-RANGE SIGNAL ■ OSCILL DETECTOR 1	⇔	Freq_osc: 0.00 Hz
	⇕	Mag_osc: 0.00 pu
	⇕	Phase_osc: 0.0 DEG
	⇧	DampR_osc: 0.0 %

10.6 REMOTE RESOURCES

Field Unit

ACTUAL VALUES > REMOTE RESOURCES > FIELD UNIT <slot and terminal>

■ FIELD UNIT U1 ■ ID: U 1	⇔	FIELD UNIT STATUS: DISABLED	Range: Disabled, Enabled
	⇕	BRICK SERIAL NUMBER:	
	⇕	BRICK ORDER CODE: CC-55	
	⇕	BRICK DIGITAL CORE: 0	
	⇕	LOCAL TRANSCEIVER: TX POWER: 0.0 dBm	
	⇕	BRICK TRANSCEIVER RX POWER: 0.0 dBm	
	⇕	BRICK TRANSCEIVER TX POWER: 0.0 dBm	
	⇧	LOCAL TRANSCEIVER RX POWER: 0.0 dBm	

This menu displays when using a Process Bus Module for a HardFiber Brick.

10.7 PROCESS BUS MODULE

10.7.1 GENERAL STATUS

ACTUAL VALUES > PB MODULE > GENERAL STATUS

■ GENERAL STATUS ■	⇔	NETWORK CONFIG: INDEPENDENT	Range: INDEPENDENT, PRP, HSR, Dual HSR
	⇕	Port 1a Status: Disabled	Range: Disabled, Enabled, Active
	⇩		
	⇧	Port 4b Status: Disabled	Range: Disabled, Enabled, Active

Note:
These menus display when the product includes a Process Bus Module with order code 85, 86, or 87. The actual values display on the front panel and software. Additional values display in a web browser; enter the IP address of the relay and access the Process Card Menu.

Ports applicable to the Process Bus Module display. The example shows all eight ports.

The information also displays in a web browser under ***Process Card Menu > Process Card Port Information.***

10.7.2 RXSV STATUS

ACTUAL VALUES > PB MODULE > RxSV Status

■ RxSV Status ■	⇔	All RxSV Online: No	Range: Yes, No
	⇕	■ RxSV <n> ■	n = 1 to 16 depending on model

ACTUAL VALUES > PB MODULE > RxSV Status > RxSV<n>

Note:
Only RxSV 1 is shown

■ RxSV 1 ■	⇔	SV 1 Status: Off	Range: Off, On, Not Configured
	⇕	SV 1 Sync Status: No Sync	Range: Local, Global, No Sync

⇳	SV 1 SynchSrcID: 0000000000000000	Range: Any 8-octet value
⇳	SV 1 Sim Flag: Off	Range: Off, On
⇳	SV 1 Delay: 0 µs	Range: µs
⇳	SV 1 Missed Frames: No	Range: Yes, No
⇳	SV 1 Ch 1 Quality: 0	Range: 0000000000000
	⇩	
⇧	SV 1 Ch<n> Quality: 0	

Additional actual values for sampled values display in a web browser. Enter the IP address of the relay and access ***Process Card Menu > Process Card Diagnostics***, for which the following fields are explained.

All SV diagnostics are volatile and are cleared when power is cycled.

Sample Value processing delay...Min Delay

The minimum time delay in received sample values. The accuracy threshold of this diagnostics is within 1/8 of a power system cycle.

Sample Value processing delay...Max Delay

The maximum time delay in received sample values. The accuracy threshold of this diagnostics is within 1/8 of a power system cycle.

Sample Value processing delay...Avg Delay

he average time delay for received sample values. A delay up to about 1.5 milliseconds (1500 µsec) is normal. The accuracy threshold of this diagnostics is within 1/8 of a power system cycle.

SV Delay Alarm Counter

The number of times that sampled values from a configured SV stream are delayed for more than the Settings > Process Bus Module > General > SV Delay Alarm setting. Counters wrap around when they reach 4294967295.

Sample Estimation Counter

The number of times that the relay used an internal estimation algorithm to substitute a missing sample value. Counters wrap around when they reach 4294967295.

Stream Status

The status of a configured SV stream. If the Settings > Process Bus Module > SV Stream Config > SV Stream setting is set to Disabled, this value is shown as Disabled. If the setting is set to IEC 61850-9-2LE or IEC 61869-9 and received sample values are accepted by the relay, this value is shown as Online. If received sample values are rejected, or sample values are lost (frames not received), stream status changes to Offline.

Latest Unacceptable Quality

Time stamp of the latest sample value with unacceptable quality, in any data item in a dataset. This time stamp has 1/8 of a power system cycle accuracy threshold.

Latest Sim Bit Change

The time stamp of latest change in simulation bit status of the received RxSV# messages. This time stamp has 1/8 of a power system cycle accuracy threshold.

SmpSync Latest Update Time

The time stamp of the latest sample value for which the SmpSync attribute was different from the previous samples. This value determines when the time source that sample value stream is synchronized to has changed. This time stamp has 1/8 of a power system cycle accuracy threshold.

SmpSync Changes in Past 24hrs

The number of times the SmpSync attribute in the sample value messages from this stream has changed in the past 24 hours. This counter is updated every hour. Counters wrap around when they reach 4294967295. The accuracy of this metric is 1.5 hours over a 24-hour period.

Sample Estimate Fail-Last 10s

The number of times that three or more out of five consecutive samples has been lost in the last 10 seconds. This counter is updated every second. Counters wrap around when they reach 4294967295.

Sample Value Trouble Counter

The number of times that the SV Stream Trouble On minor self-test error is detected by the Process Bus Module. Counters wrap around when they reach 4294967295.

10.7.3 CLOCK SYNCHRONIZING

ACTUAL VALUES > PB MODULE > PBM PTP

■ PBM PTP ■	⇔	Clock Sync Source: None Range: CPU Clock, PBM PTP Clock, PBM Internal Clock, None
	⇕	Grandmaster ID: 00000000000000000 Range: any 8 octet value
	⇕	Accuracy: 0 ns Range: 0 to 999,999,999 ns
	⇕	PBM SW1 PTP State Range: Disabled, No Signal, Calibrating, Synch'd (INV UTCOFF), Synchronized, Qualifying, idle, master
	⇧	PBM SW2 PTP State Range: Disabled, No Signal, Calibrating, Synch'd (INV UTCOFF), Synchronized, Qualifying, idle, master

Note:
Additional actual values for time are available under ***Actual Values > Status > Real Time Clock Synchronizing****.*

Clock Sync Source

This is the time synchronizing source that the UR Process Bus Module is using at present. It displays CPU Clock when the 1 pulse per second (PPS) signal from the main CPU drives the Process Bus Module clock. It displays None when the Process Bus Module clock free runs. It displays SV Sync Stream when the Process Bus Module clock is synchronized to the configured reference stream. It displays PBM Clock when the Process Bus Module clock is synchronized to a PTP grandmaster clock. The time synchronizing source itself is set using ***SETTINGS > PRODUCT SETUP > REAL TIME CLOCK*** and ***SETTINGS > PROCESS BUS MODULE > PBM PTP > PTP FUNCTION***. If the latter is not set, then the Sync Source displays None even when the ***REAL TIME CLOCK*** setting is configured.

Grandmaster ID

This is the grandmaster clock (grandmasterIdentity) of the present PTP network if any. When the UR Process Bus Module is not using any PTP grandmaster, this actual value is set to the ID of that relay and the relay is acting as grandmaster in the network. The ID code is specified by PTP to be globally unique, so one can always know which clock is grandmaster in a system with multiple grandmaster-capable clocks.

Accuracy

This is the estimated time error based on the clockAccuracy information embedded in the received time signal. This actual value indicates the grandmaster clock accuracy. The clockAccuracy enumeration information received from the grandmaster is translated into nanoseconds as specified in the following table. The value 999,999,999 indicates that the magnitude of the estimated error is one second or more, or that the error cannot be estimated. The value 999,999,999 is used if the clockAccuracy received from grandmaster is in the ranges: 00 - 1F and 2F - FF. If the relay is the grandmaster, the actual value indicates the estimated accuracy of the local clock and the same information is embedded in the transmitted PTP messages. See `defaultDS.clockQuality.clockAccuracy` for more information.

Value (hex)	Specification
00-1F	Reserved
20	The time is accurate to within 25 ns
21	The time is accurate to within 100 ns
22	The time is accurate to within 250 ns
23	The time is accurate to within 1 µs
24	The time is accurate to within 2.5 µs
25	The time is accurate to within 10 µs
26	The time is accurate to within 25 µs
27	The time is accurate to within 100 µs
28	The time is accurate to within 250 µs
29	The time is accurate to within 1 ms
2A	The time is accurate to within 2.5 ms
2B	The time is accurate to within 10 ms
2C	The time is accurate to within 25 ms
2D	The time is accurate to within 100 ms
2E	The time is accurate to within 250 ms
2F	The time is accurate to within 1 s
30	The time is accurate to within 10 s
31	The time is accurate to greater than 10 s
32-7F	Reserved
80-FD	For use by alternate PTP profiles
FE	Unknown

Value (hex)	Specification
FF	Reserved

PBM SW1 PTP State and PBM SW2 PTP State

These are actual values that indicate the PTP clock sate at switch level. The possible values are as follows:

- *DISABLED*: The PTP function setting is disabled. With all other values, the PTP function is enabled.
- *NO SIGNAL*: No signal from an active master has been found.
- *CALIBRATING*: An active master has been selected but is not yet locked in.
- *SYNCHRONIZED*: The signal is synchronized.
- *SYNCH'D(INV UTCOff)*: This value is shown if the signal is synchronized to the PTP master but with ***currentUtcOffsetValid*** = False
- *QUALIFYING*: This value is shown if the local clock is the better clock, but it is waiting for the qualification time to expire
- *IDLE*: The port is neither slave nor master and is in a PASSIVE state.
- *MASTER*: The he port is acting as the master.

Explanation of ports

The UR Process bus module has a total of 8 ports. They are implemented using 2 switches (4 ports on each switch). Switch1 includes port 1a, 1b, 2a and 2b, and Switch 2 includes 3a, 3b, 4a and 4b. The UR process bus module implements a hybrid PTP clock. Both the switches implement a stateless transparent clock between the 4 ports of the switch, and on top an ordinary clock is implemented between the two switches. So, the PTP states are not applicable at port level, but the states are maintained at switch level. Enabled ports on each switch operate in stateless transparent clock mode and PTP messages are forwarded between the ports of that switch.

At switch level, each switch acts as an independent ordinary clock and no messages are forwarded between the switches. A BMCA is run between both the ordinary clocks of the switches, and the selected best master is synchronized to the PBM local clock. If grandmasters are available on both switches, both the switches can be in a SLAVE state. However internally, the PBM runs BMCA on both switches and selects one as the best master. The Grandmaster ID indicates the selected master. In master-slave mode, if the switch state is master, the time is encoded from the PBM local clock, and messages are sent as if the switch is a grandmaster.

The enabled transceiver ports on the PBM module operate in stateless transparent clock mode. For this reason we recommend setting the ***Network Config*** setting to match the network topology. This will avoid unnecessary data storms. For example, if the PRP network has multiple relays connected on a PRP LAN and if its ***Process Bus Module -> General -> Network Config*** setting is configured as `Independent`, PTP messages other than the `PDelay` message are forwarded between the connected ports, which can create PTP Data storm.

10.7.4 PRP

ACTUAL VALUES > PB Module > PBM PRP Status

■ PBM PRP Status ■	⇔	Total Rx Port A: 0 — Range: 0 t0 4G
	⇕	Total Rx Port B: 0 — Range: 0 t0 4G
	⇕	Total Errors Port A: 0 — Range: 0 t0 4G

⇕	Total Errors Port B: 0	Range: 0 t0 4G
⇕	Mismatches Port A: 0	Range: 0 t0 4G
⇕	Mismatches Port B: 0	Range: 0 t0 4G
⇕	FER Port A: 0	Range: 0 t0 4G
	FER Port B: 0	Range: 0 t0 4G
	Link Active Port A: No	Range: Yes, No
⇧	Link Active Port B: No	Range: Yes, No

Total Rx Port A

Counter for total messages received (either from DANPs or from SANs) on Port A

Total Rx Port B

Counter for total messages received (either from DANPs or from SANs) on Port B

Total Errors Port A

Counter for total messages received with an error (bad port code, frame length too short) on Port A

Total Errors Port B

Counter for total messages received with an error (bad port code, frame length too short) on Port B

Mismatches Port A

Counter for total messages received with an error on Port A (PRP frame, but port received through and LAN id in the frame don’t match)

Mismatches Port B

Counter for total messages received with an error on Port B (PRP frame, but port received through and LAN id in the frame don’t match),

FER Port A

Frame Error Rate is a counter which counts Erroneous messages on channel A for every 1000 messages forwarded to Application.

FER Port B

Frame Error Rate is a counter which counts Erroneous messages on channel B for every 1000 messages forwarded to Application.

Link Active Port A

If true, link is up and channel A is receiving telegrams within a specified time interval (5 s).

Link Active Port B

If true, link is up and channel B is receiving telegrams within a specified time interval (5 s).

Actual values for the Parallel Redundancy Protocol (PRP) display in a web browser. Enter the IP address of the relay and access the ***Process Card Menu > Process Card PRP Statistics***, which displays only when PRP is used.

- PRP Status — PRP is Enabled if Settings > Process Bus Module > General > Network Config is set to PRP, else it is Disabled.
- Total Rx Port A — Counter indicating the number of frames received on port A, for example port 1a.
- Total Rx Port B — Counter indicating the number of frames received on port B, for example port 1b.
- Total Tx Port A — Counter indicating the number of frames sent on port A, for example port 1a.
- Total Tx Port B — Counter indicating the number of frames sent on port B, for example port 1b.
- Mismatches Port A — Counter indicating the number of erroneous frames received on port A, for example port 1a.
- Mismatches Port B — Counter indicating the number of erroneous frames received on port B, for example port 1b.
- Duplicates Removed Port A — Number of PRP duplicate frames received from port A and discarded, for example port 1a.
- Duplicates Removed Port B — Number of PRP duplicate frames received from port B and discarded, for example port 1b.

10.7.5 HSR

Actual values for High-Availability Seamless Redundancy (HSR) display in a web browser. Enter the IP address of the relay and access the ***Process Card Menu > Process Card HSR Statistics***, which displays only when HSR is used.

- HSR1 Status — Status of the first ring, either enabled or disabled. Enabled when redundancy is set to HSR or Dual-HSR.
- HSR2 Status — Status of the second ring, either enabled or disabled. Enabled when redundancy is set to HSR or Dual-HSR.
- Total Rx Port A — Counter indicating the number of frames received on port A, for example port 1a.
- Total Rx Port B — Counter indicating the number of frames received on port B for example port 1b.
- Total Tx Port A — Counter indicating the number of frames sent on port A, for example port 1a.
- Total Tx Port B — Counter indicating the number of frames sent on port B, for example port 1b.
- Duplicates Removed Port A — Number of HSR duplicate frames received from port A and discarded, for example port 1a.
- Duplicates Removed Port B — Number of HSR duplicate frames received from port B and discarded, for example port 1b

10.8 RECORDS

10.8.1 FAULT REPORTS

ACTUAL VALUES > RECORDS > FAULT REPORTS > FAULT REPORT <n>

Note:
Only FAULT REPORT 1 is shown

NO FAULTS TO REPORT			
Or			
■ FAULT REPORT 1 ■	⇔	FAULT 1 LINE ID: SRC 1	Range: SRC <n>
	⇕	FAULT 1 DATE: 2000/08/11	Range: YYYY/MM/DD
	⇕	FAULT 1 TIME: 00:00:00.000000	Range: HH:MM:SS.ssssss
	⇕	FAULT 1 TYPE: ABG	Range: not available if the source VTs are in the “Delta” configuration
	⇕	FAULT 1 LOCATION 00.0 km	Range: not available if the source VTs are in the “Delta” configuration
	⇕	FAULT 1 FAULTED SEGMENT: Local	L90 only Range:N/A, Local Remote 1, Remote 2 (dependent on configuration)
	⇕	FAULT 1 RECLOSE SHOT: 0	Range: where applicable
	⇕	FAULT 1 LOOP RESIST: 0.00 Ohms	Range: 0 to 327.67 Ohms
	⇕	FAULT 1 LOOP REACT: 0.00 Ohms	Range: -327.67 to 327.67 Ohms
	⇧	FAULT 1 FAULT RESIST: 0.00 Ohms	L90 only Range: 0 to 327.67 Ohms

The latest 15 fault reports can be stored. The most recent fault location calculation (when applicable) is displayed in this menu, along with the date and time stamp of the event which triggered the calculation. See the ***SETTINGS > PRODUCT SETUP > FAULT REPORTS*** menu for assigning the source and trigger for fault calculations. See the ***COMMANDS > CLEAR RECORDS*** menu for manual clearing of the fault reports and to the ***SETTINGS > PRODUCT SETUP > CLEAR RELAY RECORDS*** menu for automated clearing of the fault reports.

The FAULT 1 LOOP RESISTANCE and REACTANCE are expressed in secondary ohms, which are calculated as per the following equation:

$$Z_{loop} = V_{loop} / I_{loop}$$

The table defines the loop voltage and current.

Fault type	Vloop	Iloop
AG	VA	IA + (Z0/Z1-1)*I0 + Z0M/Z1*IG/3
BG	VB	IB + (Z0/Z1-1)*I0 + Z0M/Z1*IG/3
CG	VC	IC + (Z0/Z1-1)*I0 + Z0M/Z1*IG/3
AB, ABG	VA – VB	IA - IB
BC, BCG	VB – VC	IB - IC
CA, CAG	VC – VA	IC - IA
ABC	Average of AB, BC, CA loop impedances	

Where VA, VB, VC are phase voltage phasors in secondary volts; IA, IB, IC are current phasors in secondary amps, I0 is the zero sequence current phasors in secondary amps; and IG is the ground current from the parallel line scaled to the source phase CT in secondary amps. Z0/Z1 is the zero sequence impedance to positive sequence impedance ratio, and Z0M/Z1 is mutual zero sequence impedance to positive sequence impedance ratio.

VTs of the FAULT REPORT 1 SOURCE must be connected in Wye or VT SUBSTITUTION must be set correctly for the Delta connected VT to display the loop impedance and fault resistance for single phase-to-ground faults.

For the application of partially parallel circuits and in the case of single phase-to-ground faults, the reported fault resistance and fault loop impedance may not be accurate even the compensation method is applied.

10.8.2 EVENT RECORDS

10.8.2.1 ENHANCED AND BASIC FRONT PANELS

ACTUAL VALUES > RECORDS > EVENT RECORDS

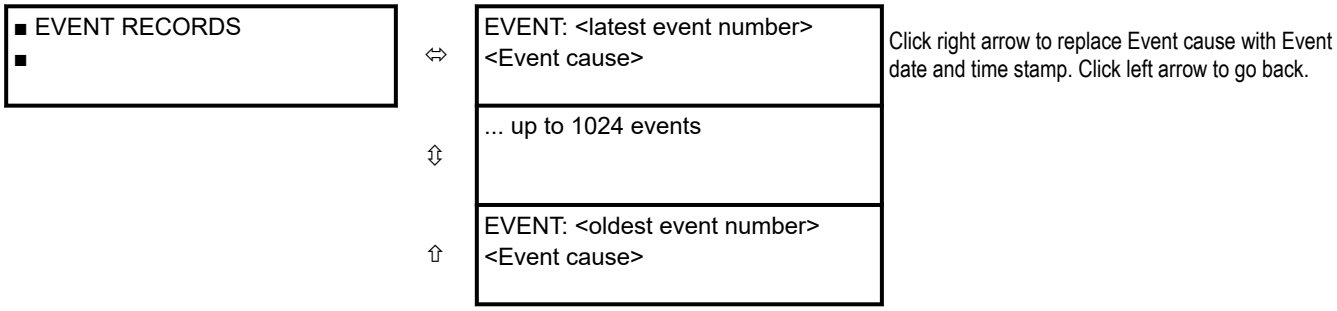

The event records menu shows the contextual data associated with up to the last 1024 events, listed in chronological order from most recent to oldest. When all 1024 event records have been filled, the oldest record is removed as a new record is added. Each event record shows the event identifier/sequence number, cause, and date/time stamp associated with the event trigger. See the ***COMMANDS > CLEAR RECORDS*** menu for clearing event records.

Only major output operands generate events, not every operand. Elements that assert output per phase, for example, log operating phase output only without asserting the common three-phase operand event.

See also the system log (syslog) information in the previous chapter.

The event records are viewable in the software and in a web browser. The figure shows the event records in the software.

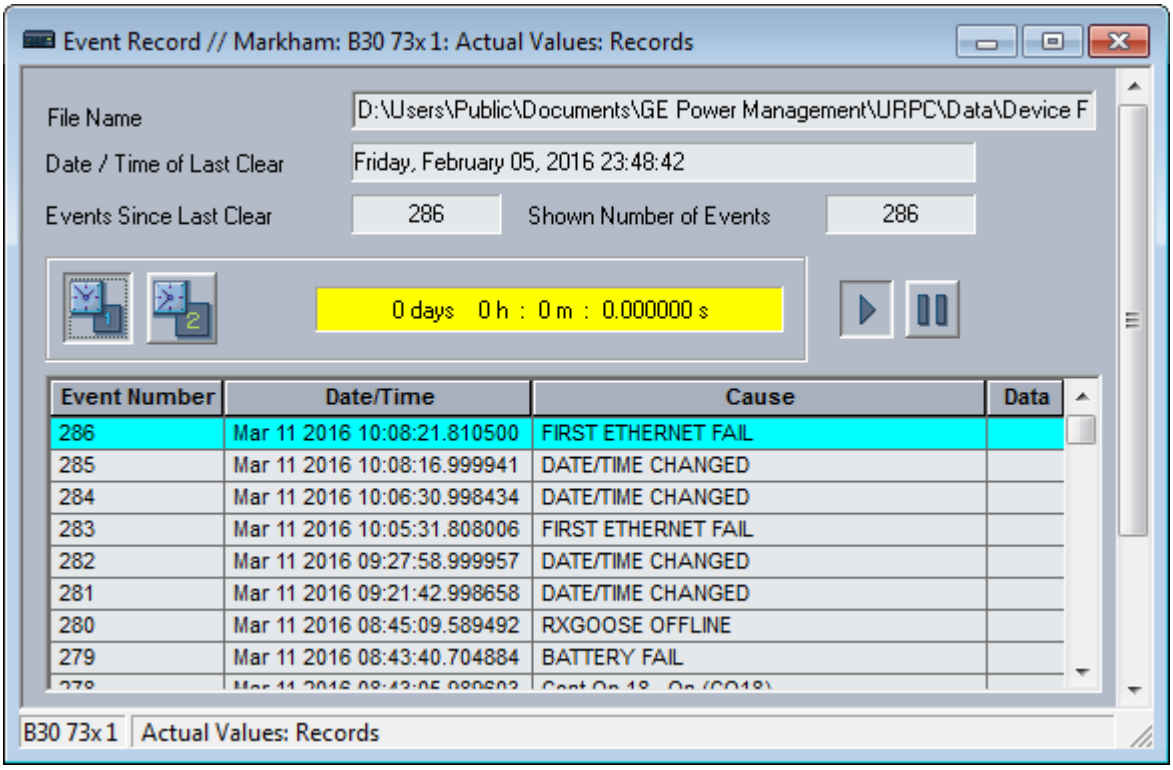

Figure 411: Event records viewed in EnerVista software

To view events in a web browser, enter the IP address of the device.

To download an oscillography waveform, click the Oscillography icon in the Data column (not shown in the figure).

10.8.2.2 GRAPHICAL FRONT PANEL

To display the event records page, press the **Home** pushbutton then the **Event Record** Tab pushbutton.

The newest event is always at the top.

Up and Down pushbuttons move the event selector up and down. When the selector is at the bottom of the display, the Down pushbutton also scrolls the page, and similarly when the active selector is at the top of the display the Up pushbutton scroll the page.

A selected event is highlighted in yellow and becomes active by pressing the Up or Down pushbutton.

There are two event markers, one green, the other cyan. To mark some an event, use the Up and Down pushbuttons to select it (highlight in yellow), then press the green or cyan Mark Event Tab pushbutton. The mark color hides the selector until the selector is moved. A field at the top of the page shows the interval between the two marks.

\\Event Record 29-Jun-17 11:56:33 AM

Most recent event number	38	Time between marks	0d 0h : 0m : 35.012364s

Event ID	Date/Time	Cause
38	29-Jun-17 10:17:56.117582	WRONG TRANSCEIVER
37	29-Jun-17 10:17:56.117582	POWER ON
36	29-Jun-17 10:17:21.105218	POWER OFF
35	29-Jun-17 10:17:21.105218	REBOOT COMMAND
34	29-Jun-17 10:01:41.074062	FLASH PROGRAMMING
33	29-Jun-17 09:49:33.711569	RESET ANCTR OP(MNUL)
32	29-Jun-17 09:49:12.946980	RESET ANCTR OP(MNUL)
31	29-Jun-17 09:47:51.344902	RESET ANCTR OP(MNUL)
30	29-Jun-17 09:41:34.117044	WRONG TRANSCEIVER
29	29-Jun-17 09:41:34.117044	POWER ON

Mark Event | Mark Event | Page Up | Page Down

Figure 412: Event record

10.8.3 OSCILLOGRAPHY

ACTUAL VALUES > RECORDS > OSCILLOGRAPHY

■ OSCILLOGRAPHY
■

⇔ FORCE TRIGGER?
No
Range: No, Yes

⇕ NUMBER OF TRIGGERS:
0

⇕ AVAILABLE RECORDS:
0

⇕ CYCLES PER RECORD:
0

⇧ LAST CLEARED DATE:
2019/07/14 15:40:16

This menu allows the user to view the number of triggers involved and number of oscillography traces available. The cycles per record value is calculated to account for the fixed amount of data storage for oscillography. See the Oscillography section of chapter 5 for details.

A trigger can be forced here at any time by setting `Yes` to the ***FORCE TRIGGER?*** command. See the ***COMMANDS > CLEAR RECORDS*** menu for information on clearing the oscillography records.

To view a waveform:

1. Access ***Actual Values > Records > Oscillography*** in the EnerVista software.
2. In the window that opens, select the record number. The highest number is the most recent record (Newest Record Number).
3. Click the **Read** button to get the waveform. When available, waveforms are displayed graphically, and otherwise error messages display.
4. In the waveform window that opens, you can save the file, for example with the CFG extension.

10.8.4 DATA LOGGER

ACTUAL VALUES > RECORDS > DATA LOGGER

■ DATA LOGGER ■	⇔	OLDEST SAMPLE TIME: 2020/01/14 13:45:51
	⇧	NEWEST SAMPLE TIME: 2020/01/14 15:21:19

The ***OLDEST SAMPLE TIME*** represents the time at which the oldest available samples were taken. It is static until the log gets full, at which time it starts counting at the defined sampling rate.

The ***NEWEST SAMPLE TIME*** represents the time the most recent samples were taken. It counts up at the defined sampling rate. If the data logger channels are defined, then both values are static.

See the ***COMMANDS > CLEAR RECORDS*** menu for clearing data logger records.

10.8.5 PHASOR MEASUREMENT UNIT

ACTUAL VALUES > RECORDS > PMU RECORDS

■ PMU ■ RECORDS	⇔	NUMBER OF TRIGGERS: 0	Range: 0 to 65535 in steps of 1
	⇧	■ PMU 1 ■ RECORDING	

The number of triggers applicable to the Phasor Measurement Unit recorder is indicated by the ***NUMBER OF TRIGGERS*** value. The status of the phasor measurement unit recorder is indicated as follows.

ACTUAL VALUES > RECORDS > PMU RECORDS > PMU 1 RECORDING

■ PMU 1 ■ RECORDING	⇔	PMU 1 FORCE TRIGGER: No	Range: No, Yes
	⇧	PMU 1 AVAILABLE RECORDS: 0	Range: 0 to 65535 in steps of 1
	⇧	PMU 1 SECONDS PER RECORD: 0.0	Range: 0 to 6553.5 in steps of 0.1
	⇧	PMU 1 LAST CLEARED: 2013/07/14 15:40:16	Range: YYYY/MM/DD HH:MM:SS

10.8.6 BREAKER MAINTENANCE

ACTUAL VALUES > RECORDS > MAINTENANCE > BREAKER <n>

Note:
Only BREAKER 1 is shown

■ BREAKER 1 ■	⇔	BKR 1 ACC ARCING AMP φA: 0.00 kA2-cyc
	⇕	BKR 1 ACC ARCING AMP φB: 0.00 kA2-cyc
	⇕	BKR 1 ACC ARCING AMP φC: 0.00 kA2-cyc
	⇕	BKR 1 OPERATING TIME φA: 0 ms
	⇕	BKR 1 OPERATING TIME φB: 0 ms
	⇕	BKR 1 OPERATING TIME φC: 0 ms
	⇕	BKR 1 OPERATING TIME: 0 ms
	⇕	BKR 1 ARCING AMP φA: 0.00 kA2-cyc
	⇕	BKR 1 ARCING AMP φB: 0.00 kA2-cyc
	⇕	BKR 1 ARCING AMP φC: 0.00 kA2-cyc
	⇕	BKR 1 AMP MAX φA: 0.00 kA
	⇕	BKR 1 AMP MAX φB: 0.00 kA
	⇑	BKR 1 AMP MAX φC: 0.00 kA

There is an identical menu for each of the breakers.

The ***BKR 1 ACC ARCING AMP*** values are in units of kA2-cycles. See the ***COMMANDS > CLEAR RECORDS*** menu for clearing breaker arcing current records.

The ***BREAKER OPERATING TIME*** is defined as the slowest operating time of breaker poles that were initiated to open.

All of the values are stored in non-volatile memory and retained with power cycling.

10.9 PRODUCT INFORMATION

10.9.1 MODEL INFORMATION

ACTUAL VALUES > PRODUCT INFO > MODEL INFORMATION

■ MODEL INFORMATION ■	⇔	ORDER CODE LINE 1: <order code> — Range: standard GE order code format
	⇕	ORDER CODE LINE 2: <order code continued> — Range: up to 20 alphanumeric characters
	⇕	ORDER CODE LINE 3: <order code continued> — Range: up to 20 alphanumeric characters
	⇕	ORDER CODE LINE 3: <order code continued> — Range: up to 20 alphanumeric characters
	⇕	SERIAL NUMBER: <serial number> — Range: standard GE serial number format
	⇕	ETHERNET MAC ADDRESS <MAC address> — Range: standard Ethernet MAC address format
	⇕	MANUFACTURING DATE: <Date> — Range: YYYY/MM/DD HH:MM:SS
	⇕	OPERATING TIME: <accumulative operating time> — Range: HH:MM:SS
	⇕	PMU FEATURE ACTIVE: No — Range: Yes, No
	⇕	CT/ VT ADVANCED DIAG ACTIVE: No — Range: Yes, No (not L60)
	⇕	LAST SETTING CHANGE: <Date of last setting change> — Range: YYYY/MM/DD HH:MM:SS
	⇧	PBM MAC ADDRESS: <MAC address> — Range: YYYY/MM/DD HH:MM:SS

The order code, serial number, Ethernet MAC address, date and time of manufacture, and operating time are shown here. The rear panel on the device contains similar information. The information is read-only in the software and modifiable on the front panel. For example, the order code can be corrected using the front panel.

ETHERNET MAC ADDRESS

UR devices with firmware 7.0x and above have three Ethernet ports that can be used on three networks. The MAC address displays for port 1. The MAC address for port 2 is one higher. The MAC address for port 3 is one higher than port 2. In redundant mode, the MAC addresses for ports 2 and 3 are the same as port 2.

PBM MAC ADDRESS

The MAC address for the Process Bus Module.

10.9.2 FIRMWARE REVISIONS

Enhanced and basic front panels

ACTUAL VALUES > PRODUCT INFO > FIRMWARE REVISIONS

■ FIRMWARE REVISIONS ■	⇔ D60 REVISION: 8.8x	Range: 0.00 to 655.35 Revision number of the application firmware.
	⇕ MODIFICATION FILE NUMBER: 0	Range: 0 to 65535 (ID of the MOD FILE) Value is 0 for each standard firmware release.
	⇕ BOOT PROGRAM REVISION:	Range: 0.00 to 655.35 Revision number of the boot program firmware.
	⇕ FRONT PANEL PROGRAM REVISION:	Range: 0.00 to 655.35 Revision number of front panel program firmware.
	⇕ COMPILE DATE:	Range: YYYY/MM/DD HH:MM:SS Date and time when product firmware was built.
	⇕ BOOT DATE:	Range: YYYY/MM/DD HH:MM:SS Date and time when the boot program was built.
	⇕ PROCESS BUS BOOT REVISION:	Range: 0.00 to 655.35
	⇕ PB BOOT DATE:	Range: YYYY/MM/DD HH:MM:SS
	⇕ PROCESS BUS REVISION:	Range: 0.00 to 655.35
	⇕ PROCESS BUS DATE:	Range: YYYY/MM/DD HH:MM:SS
	⇕ PB CVSOC FPGA REVISION:	Range: 0.00 to 655.35
	⇕ PB CVFPGA FPGA REVISION:	Range: 0.00 to 655.35
	⇕ PB CVFPGA SIGN:	
	⇕ FPGA PROGRAM REVISION:	Range: 0.00 to 655.35 Revision number for FPGA.
	⇧ FPGA DATE:	Range: YYYY/MM/DD HH:MM:SS Date and time when the FPGA was built.

The shown data is illustrative only. A modification file number of 0 indicates that, currently, no modifications have been installed. PB and process bus refer to the Process Bus Module.

Graphical front panel

With a graphical front panel (GFP), the following additional items display in the software.

⇕	GFP PROGRAM REVISION:	Range: 0.00 to 655.35
⇕	GFP COMPILE DATE:	Range: YYYY/MM/DD HH:MM:SS
⇕	GFP BOOT PROGRAM REVISION:	Range: 0.00 to 655.35
⇧	GFP BOOT COMP. DATE:	Range: YYYY/MM/DD HH:MM:SS

CHAPTER 11

COMMANDS AND TARGETS

11.1 CHAPTER OVERVIEW

This chapter contains the following sections:

Chapter Overview 860
Commands menu 861
Targets menu 868

11.2 COMMANDS MENU

```
COMMANDS
```

⇩

⇩	■ ■ COMMANDS ■ ■ VIRTUAL INPUTS	
⇩	■ ■ COMMANDS ■ ■ CLEAR RECORDS	
⇩	■ ■ COMMANDS ■ ■ SET DATE AND TIME	
⇩	■ ■ COMMANDS ■ ■ RELAY MAINTENANCE	
⇩	■ ■ CAPACITOR BANK ■ ■ AUTO-SETTING	C70 only
⇩	■ ■ COMMANDS ■ ■ PMU ONE-SHOT	C60, C95, D60, F60, G60, L90, N60, L30, T60 only
⇩	■ ■ COMMANDS ■ ■ SECURITY	
⇩	■ ■ COMMANDS ■ ■ TRANSFORMER AUTO-SET...	T35, only
⇧	■ ■ COMMANDS ■ ■ T/F 1(2) AUTO-SET...	T60 only

The commands menu contains relay directives intended for operations personnel. All commands can be protected from unauthorized access via the command password; see the Security section of chapter 5 for details. The following flash message appears after successfully command entry.

```
COMMAND
EXECUTED
```

11.2.1 VIRTUAL INPUTS

COMMANDS > VIRTUAL INPUTS

■ ■ COMMANDS ■ ■ VIRTUAL INPUTS	⇔	Virt Ip <n> Off	Range: Off, On

11.2.2 CLEAR RECORDS

COMMANDS > CLEAR RECORDS

■ ■ COMMANDS ■ ■ CLEAR RECORDS	⇔	CLEAR FAULT REPORTS? No	Range: No, Yes
	⇩	CLEAR EVENT RECORDS? No	Range: No, Yes

⇳	CLEAR OSCILLOGRAPHY? No	Range: No, Yes
⇳	CLEAR DATA LOGGER? No	Range: No, Yes
⇳	CLEAR BREAKER 1 ARCING AMPS? No	Range: No, Yes
⇳	CLEAR BREAKER 2 ARCING AMPS? No	Range: No, Yes
⇳	CLEAR DEMAND RECORDS? No	Range: No, Yes
⇳	CLEAR ENERGY? No	Range: No, Yes
⇳	CLEAR UNAUTHORIZED ACCESS? No	Range: No, Yes
⇳	CLEAR DIRECT I/O COUNTERS? No	Range: No, Yes. Valid only for units with Direct Input/Output module.
⇳	CLEAR PMU 1 RECORDS? No	Range: No, Yes
⇳	CLEAR PMU 1 CONFIG CHANGE COUNTER? No	Range: No, Yes
⇳	CLEAR TELEPROTECT COUNTERS? No	Range: No, Yes
⇳	■ CLEAR IEC61850 ■ XWSI OPCNT	
⇳	■ CLEAR IEC61850 ■XCBR OPCNT	
⇳	CLEAR SV DIAGNOSTICS? No	Range: No, Yes
⇧	CLEAR ALL RELAY RECORDS? No	Range: No, Yes

The ***CLEAR SV DIAGNOSTICS*** command clears the sampled value diagnostics information for a non-HardFiber Process Bus Module. All other Process Bus Module diagnostics information is reset up relay power cycling, such as HSR and PTP.

COMMANDS > CLEAR RECORDS > CLEAR IEC61850 XWSI OPCNT

■ CLEAR IEC61850 ■ XWSI OPCNT	⇔	CLEAR XSWI <n> OpCnt? No	Range: No, Yes n = 1 to 24

COMMANDS > CLEAR RECORDS > CLEAR IEC61850 XCBR OPCNT

■ CLEAR IEC61850 ■ XCBR OPCNT	⇔	CLEAR XSWI <n> OpCnt? No	Range: No, Yes n = 1 to 8

The ***Clear XSWI*** commands clear the disconnect operation counters for each phase and the three-phase counter. Similarly, the ***Clear XCBR*** commands clear the circuit breaker operation counters for each phase and the three-phase counter.

11.2.3 SET DATE AND TIME

COMMANDS > SET DATE AND TIME

■ ■ COMMANDS ■ ■ SET DATE AND TIME	⇔	SET DATE AND TIME: <YYYY/MM/DD HH:MM:SS>	Range: YYYY/MM/DD HH:MM:SS

The date and time can be entered on the front panel keypad. The time setting is based on the 24-hour clock. The complete date, as a minimum, must be entered to allow execution of this command. The new time and date take effect when the **ENTER** key is pressed.

The clock also can be synchronized to the local computer time among several UR devices. Use the **Synchronize Devices** entry in the Online Window area of the EnerVista software. (Click the button at the top of the window that opens.)

When the relay is synchronizing to an external time source such as PTP, IRIG-B, or SNTP, the manually entered time or the manually synchronized time is over-written.

The timescale of the entered time is local time, including daylight savings time where and when applicable.

11.2.4 RELAY MAINTENANCE

COMMANDS > RELAY MAINTENANCE

■ ■ COMMANDS ■ ■ RELAY MAINTENANCE	⇔	PERFORM LAMP TEST? No	Range: No, Yes
	⇕	PERFORM LCD TEST? Off	Range: Off, Red, Green, Blue, White & Text Pattern, Black & Text Pattern, TV Test Pattern
	⇕	PERFORM PUSHBUTTON TEST? No	Range: No, Yes
	⇕	UPDATE ORDER CODE? No	Range: No, Yes
	⇕	REBOOT RELAY? No	Range: No, Yes
	⇕	SERVICE COMMAND 0	Range: 0, 101, 20511
	⇕	SAVE VOLATILE DATA? No	Range: No, Yes
	⇕	■ POWER SUPPLY ■	Range: see below
	⇕	FRONT PANEL TYPE	Range: see below
	⇧	CHANGE REDUNDANT POWER SUPPLY	Range: see below

This menu contains commands for relay maintenance purposes. Commands for the lamp test and order code are activated by changing a command setting to `Yes` and pressing the **ENTER** key. The command setting then automatically reverts to `No`. The service command is activated by entering a numerical code and pressing the **ENTER** key.

Not all commands display in the software; use the front panel when required.

PERFORM LAMP TEST

Turns on all front panel LEDs and display pixels for a short duration.

PERFORM LCD TEST

This command detects dead pixels in the display screen on the graphical front panel.

- *RED*, *GREEN*, *BLUE* is to display the solid background color in the whole screen.
- *WHITE & TEXT PATTERN* shows the white background and black texts.
- *BLACK & TEXT PATTERN* shows the black background and white texts.
- *TV TEST PATTERN* displays a standard television test pattern (SMPTE color bars). The test screen can be canceled by pressing any pushbutton or after 30 seconds of inactivity.

PERFORM PUSHBUTTON TEST

This command tests the pushbuttons on the graphical front panel. During testing, press the corresponding pushbutton according to the prompt text. A failure message is given if the expected action is not detected in one minute. Holding the **ESCAPE** button for five seconds to interrupt the test sequence. The designated function of a specific pushbutton is bypassed in the test.

UPDATE ORDER CODE

Use this command to read and update the order code, for example when hardware modules have been changed inside the relay. It causes the relay to scan the backplane for the modules and update the order code to match. All settings are defaulted with an update. When an update occurs, the following message displays and the relay restarts.

There is no impact if there have been no changes to the hardware modules. When an update does not occur, the `ORDER CODE NOT UPDATED` message displays.

REBOOT RELAY

This command restarts the relay so that changes to configuration settings can take effect. In most cases, if changes are made to the configuration settings these changes do not take effect unless the relay is rebooted.

> *Note:*
> *With the CyberSentry option, the Administrator and Operator roles can initiate the Reboot Relay command.*

SERVICE COMMAND

This command Performs specific Product service actions. Presently, there are two service actions available.

- Code *20511* returns all settings to their factory default value and restarts the relay (then you re-enter IP address, restart, set unit to *Programmed*).
- Code *101* is used to clear factory diagnostic information stored in the non-volatile memory. If a code other than these two is entered, the command is ignored and no action is taken. Various self-checking diagnostics are performed in the background while the Product is running, and diagnostic information is stored on the non-volatile memory from time to time based on the self-checking result. Although the diagnostic information is cleared before the Product is shipped from the factory, the user may want to clear the diagnostic information for themselves under certain circumstances. For example, you clear diagnostic information after replacement of hardware. Once the diagnostic information is cleared, all self-checking variables are reset to their initial state and diagnostics restart from scratch.

SAVE VOLATILE DATA

Saves this data to compact flash memory prior to shutdown. This allows the saved data to be as recent as possible instead of relying on the periodic timer to save the data.

POWER SUPPLY

Change power supply to: High or Low

Update redundant power supply: No, Yes

FRONT PANEL TYPE

You can change the front panel type according to the following options.

EN BASIC, EN BASIC WITH PB, ZH BASIC, ZH BASIC WITH PB, FR BASIC, FR BASIC WITH PB, RU BASIC, RU BASIC WITH PB, DE ENHANCED, DE ENHANCED WITH PB, EN ENHANCED, EN ENHANCED WITH PB, FR ENHANCED, FR ENHANCED WITH PB, RU ENHANCED, RU ENHANCED WITH PB, ZH ENHANCED, ZH ENHANCED WITH PB, TR ENHANCED, TR ENHANCED WITH PB, PL ENHANCED, PL ENHANCED WITH PB.

11.2.5 PHASOR MEASUREMENT UNIT ONE-SHOT

COMMANDS > PMU ONE-SHOT

■ ■ COMMANDS ■ ■ PMU ONE-SHOT	⇔	PMU ONE-SHOT FUNCTION: Disabled	Range: Enabled, Disabled
	⇕	PMU ONE-SHOT FRACTIONAL SEC: 0	Range: 0 to 99 in steps of 1
	⇧	PMU ONE-SHOT TIME: 2020/06/14 7:58:35	Range: YYYY/MM/DD HH:MM:SS

This feature allows pre-scheduling of a PMU measurement at a specific point in time. It can be used to test for accuracy of the PMU and for manual collection of synchronized measurements through the system, as explained here.

When enabled, the function continuously compares the present time with the pre-set ***PMU ONE-SHOT TIME***. When the two times match, the function compares the present sequence number of the measured synchrophasors with the pre-set ***PMU ONE-SHOT FRACTIONAL SEC***. When the two numbers match, the function freezes the synchrophasor actual values and the corresponding protocol data items for 30 seconds. This allows manual read-out of the synchrophasor values for the pre-set time and pre-set sequence number (via the faceplate display, supported communication protocols such as Modbus or DNP, and the EnerVista UR Setup software).

When freezing the actual values, the function also asserts a PMU ONE-SHOT OP FlexLogic operand. This operand can be configured to drive an output contact and trigger an external measuring device such as a digital scope with the intent to verify the accuracy of the PMU under test.

With reference to the following figure, the PMU one-shot function (when enabled) controls three FlexLogic operands:

The PMU ONE-SHOT EXPIRED operand indicates that the one-shot operation has been executed, and the present time is at least 30 seconds past the scheduled one-shot time

The PMU ONE-SHOT PENDING operand indicates that the one-shot operation is pending; that is, the present time is before the scheduled one-shot time

The PMU ONE-SHOT OP operand indicates the one-shot operation and remains asserted for 30 seconds afterwards

When the function is disabled, all three operands are de-asserted.

The one-shot function applies to all logical PMUs of a given Product relay.

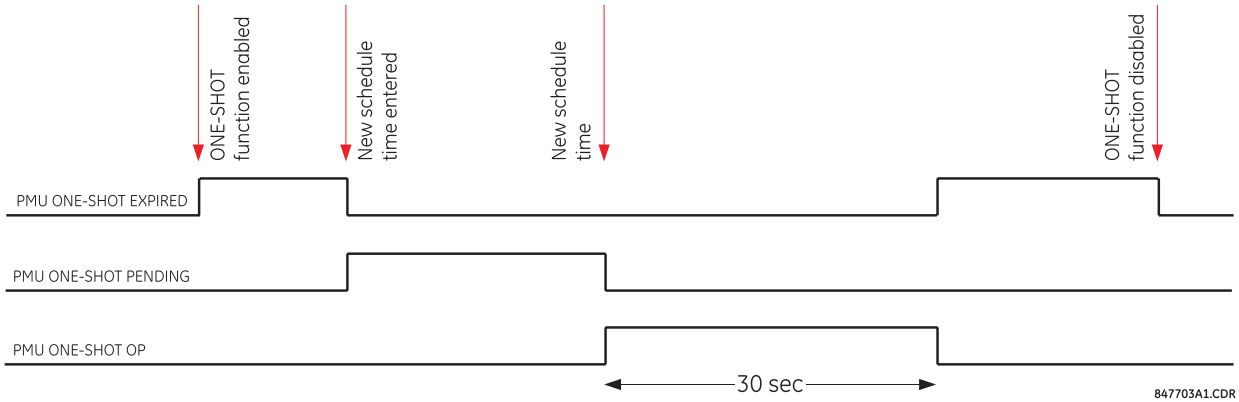

Figure 413: PMU one-shot FlexLogic operands

Testing Accuracy of the PMU

The one-shot feature is used to test accuracy of the synchrophasor measurement. GPS-synchronized tests sets perform a similar function to PMUs; instead of measuring the phasor from physical signals with respect to the externally provided time reference, they produce the physical signals with respect to the externally provided time reference, given the desired phasor values. Therefore the GPS-synchronized test sets cannot be automatically assumed more accurate than the PMUs under test. This calls for a method to verify both the measuring device (PMU) and the source of signal (test set).

With reference to the following figure, the one-shot feature can be configured to trigger a high-accuracy scope to capture both the time reference signal (rising edge of the 1 pps signal of the IRIG-B time reference) and the measured waveform. The high-accuracy high-sampling rate record of the two signals captured by the scope can be processed using digital tools to verify the magnitude and phase angle with respect to the time reference signal. As both the time reference and the measured signals are raw inputs to the PMU under test, their independently captured record, processed using third-party software, is a good reference point for accuracy calculations. Such a record proves useful when discussing the test results, and can be retained as a part of the testing documentation.

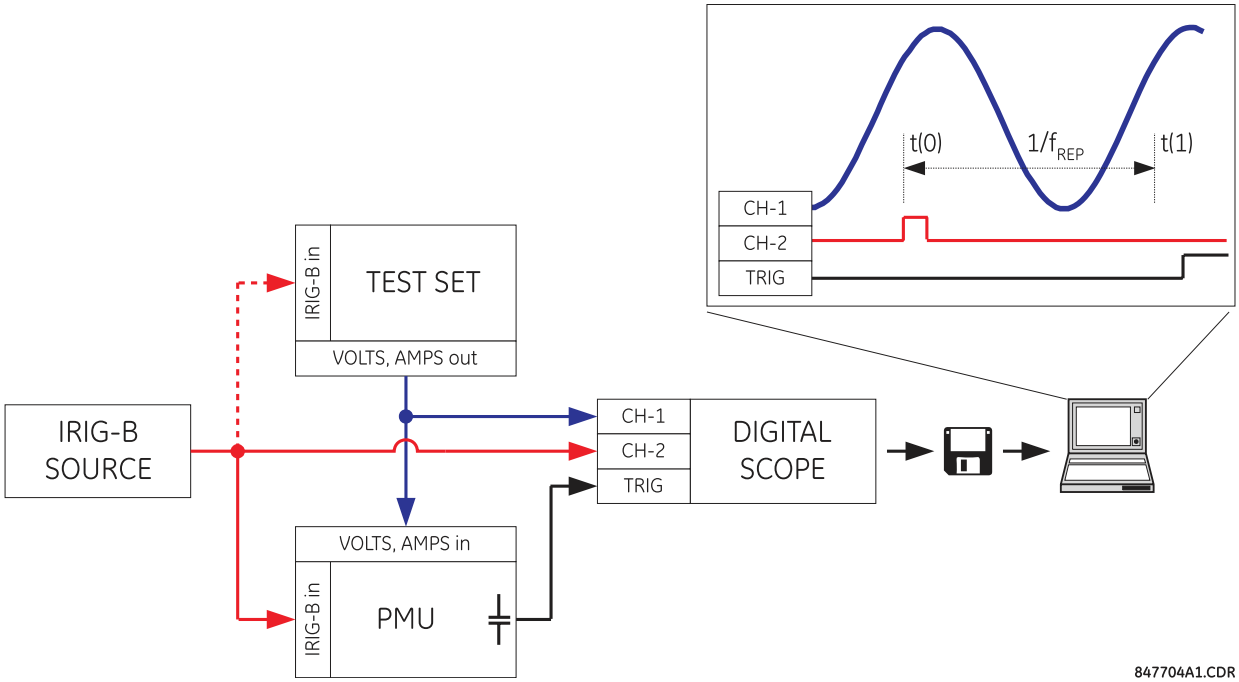

Figure 414: Using the PMU one-shot feature to test synchrophasor measurement accuracy

Collecting synchronized measurements ad hoc

The one-shot feature can be used for ad hoc collection of synchronized measurements in the network. Two or more PMUs can be pre-scheduled to freeze their measurements at the same time. When frozen, the measurements can be collected using the EnerVista software or a protocol client.

11.2.6 SECURITY

COMMANDS > SECURITY

■ ■ SECURITY ■ ■	⇔ ADMINISTRATOR LOGOFF: No	Range: No, Yes
	⇕ ENGINEER LOGOFF: No	Range: No, Yes
	⇕ OPERATOR LOGOFF: No	Range: No, Yes
	⇧ CLEAR SECURITY DATA: No	Range: No, Yes

With the CyberSentry option, this setting is available to enable or disable the following commands.

ADMINISTRATOR LOGOFF

Selecting `Yes` allows the Supervisor to forcefully logoff an administrator session.

ENGINEER LOGOFF

Selecting `Yes` allows the Supervisor to forcefully logoff an engineer session.

OPERATOR LOGOFF

Selecting `Yes` allows the Supervisor to forcefully logoff an operator session.

CLEAR SECURITY DATA

Selecting `Yes` allows the Supervisor to forcefully clear all the security logs and clears all the operands associated with the self-tests.

11.3 TARGETS MENU

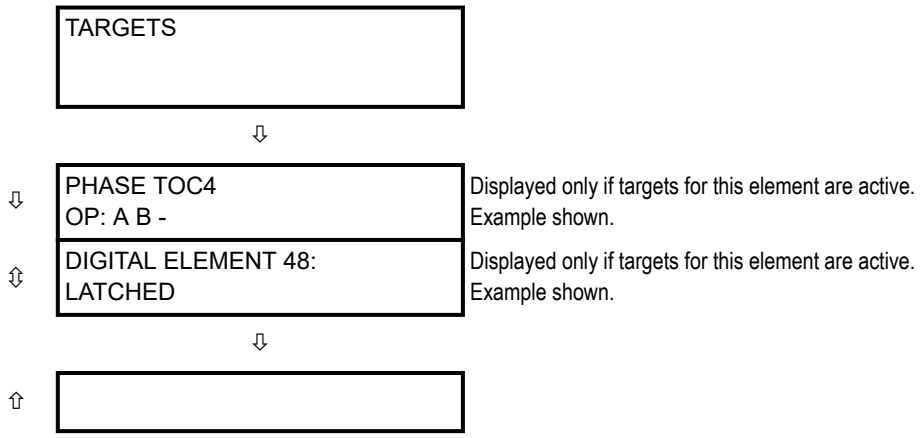

A target enables the EnerVista UR Setup software to monitor automatically and display the status of any active target messages of all the devices inserted into that site.

Each Product element with a ***TARGET*** setting has a target message that when activated by its element is displayed in sequence with any other currently active target messages in the **TARGETS** menu. In the example shown, the ***Phase TOC4*** and ***Digital Element 48*** target settings are active and so have their targets displayed. The down arrow below the two elements indicates that there can be other active elements beyond these two.

For more information, see the description of target messages in the next section, and the Introduction to Elements section in the Settings chapter for instructions on ***TARGET*** setting.

When no targets are active, the display reads `NO ACTIVE TARGETS`.

11.3.1 TARGET MESSAGES

When there are no active targets, the first target to become active causes the display to immediately default to that message. If there are active targets and the user is navigating through other messages, and when the default message timer times out (i.e. the keypad has not been used for a determined period of time), the display again defaults back to the target message.

The range of variables for the target messages is described below. Phase information is included if applicable. If a target message status changes, the status with the highest priority displays.

Priority	Active status	Description
1	OP	element operated and still picked up
2	PKP	element picked up and timed out
3	LATCHED	element had operated but has dropped out

If a self test error is detected, a message appears indicating the cause of the error. For example `UNIT NOT PROGRAMMED` indicates that the minimal relay settings have not been programmed.

11.3.2 RELAY SELF-TESTS

The relay performs a number of self-test diagnostic checks to ensure device integrity. The two types of self-tests (major and minor) are listed in the following tables. When either type of error occurs, the Trouble LED Indicator turns on and a target message displays. All errors record an event in the event recorder. Latched errors can be cleared by pressing the RESET key, providing the condition is no longer present.

Major self-test errors also result in the following:

- The critical fail relay on the power supply module de-energizes
- All other output relays de-energize and are prevented from further operation
- The front panel In Service LED indicator turns off
- A RELAY OUT OF SERVICE event is recorded

To view error messages in EnerVista software:

Access ***Actual Values > Records > Event Records***.

Messages display on the front panel with one or two lines of text. An example is as follows:

```
MAINTENANCE ALERT:
4L Discrepancy
```

```
MAINTENANCE ALERT:
Bad IRIG-B Signal
```

11.3.3 MAJOR SELF-TEST ERROR MESSAGES

Error	Latched?	Description	Test frequency	Action
DIAGNOSTIC FAILURE : Self Test Error	No (self-reset)	This serves as a warning indicating an issue within the DSP/COP subsystem. The root cause of the problem is uncertain, attributed to several contributors. To pinpoint the likely cause, it is advisable to conduct DSP diagnostics.	Upon recovery	Extract a Service Report through UR Setup software. Contact technical support.
EQUIPMENT MISMATCH: 2nd line detail	No	The number or type of installed hardware modules does not match the order code stored in the Product. For example, when a basic front panel is installed and the order code on the Product expects a graphical front panel.	On power up. Afterwards, the backplane is checked for missing cards every five seconds	Check all modules against the order code, ensure they are inserted properly, and cycle control power. If a module has intentionally been added or removed, refresh the order code under Device Setup. If the problem persists, contact the factory.
FLEXLOGIC ERROR: 2nd line detail	No	A FlexLogic equation is incorrect	Event driven, performed whenever FlexLogic equations are modified	Finish all equation editing and use self tests to debug any errors.
RAM FILESYSTEM FAIL: Self-Test Error	Yes	The relay failed to create the RAM file system	On relay startup	Contact factory service
SYSTEM FAILURE: 2nd line detail	Yes	Relay system failure detected	Continuous	Extract a Service Report through UR Setup software. Contact technical support.
SYSTEM FAILURE: Card F8L	Yes	This signifies a DSP failure, with the message specifying both the slot and DSP type associated with the issue.		The recommendation is to replace this DSP. Extract a Service Report through UR Setup software and provide it to GE customer service..
TO INSTALL SETTINGS: Check log and reboot	Yes	Certain settings require a reboot to be applied, for example DNP settings, IEC 104 settings. After a CID file was send to the relay, a manual reboot of the relay is required to apply those settings that require a reboot	New CID is sent and it includes changes in settings that require a reboot to be applied	Restart relay
UNIT NOT PROGRAMMED: Check Settings	No	The PRODUCT SETUP > INSTALLATION > RELAY SETTINGS setting indicates the Product is not programmed	On power up and whenever the PRODUCT SETUP > INSTALLATION > RELAY SETTINGS setting is altered	Program all settings and then set PRODUCT SETUP > INSTALLATION > RELAY SETTINGS to “Programmed”

11.3.4 MINOR SELF-TEST ERROR MESSAGES

Error	Latched?	Description	Test frequency	Action
AGGREGATOR ERROR: (C60, C95, D60, F60, G60, L30, L90, T60 only)	No	The second line of this self-test error indicates the problem with the PMU Aggregator	Each time a PMU’s related settings is changed	Correct the problem indicated in the second line or contact the factory

Error	Latched?	Description	Test frequency	Action
DIAGNOSTIC ALARM COP: Self-test Error	Yes	This is an initial alert indicating an issue with the co-processor. Despite this, the relay will continue to provide protection. However, certain functionalities, such as distance-related operations, may experience a slight delay, especially when the fast distance feature is activated and executed on the co-processor.	Module or feature dependent	Extract a Service Report through UR Setup software and provide it to GE customer service
DIAGNOSTIC ALARM: Card F8L	Yes	This serves as an initial alert signaling a potential issue with a DSP. The message will specify both the slot and DSP type associated with the problem..	Every protection pass	Extract a Service Report through UR Setup software and provide it to GE customer service
DIAGNOSTIC ALARM: Self Test Error	Yes	This serves as an initial alert indicating a potential issue within the DSP/COP subsystem. The exact origin of the issue remains unidentified due to various contributing factors. To determine the likely cause, it is recommended to acquire DSP diagnostics.	Every protection pass	Extract a Service Report through UR Setup software. Contact technical support.
DIRECT DEVICE OFF: COMM Path Incomplete	No	A direct device is configured but not connected	Every second	Check direct input and output configuration and wiring
DOS PARTITION ALARM: SELF-TEST ERROR		There is a problem with the Compact Flash memory in the CPU module	On relay power-up and afterwards once every 24 hours	Contact the factory
FACTORY MODE ACTIVE	No	Factory Mode is active		This is a reminder for the Supervisor (if enabled) or Administrator to disable Settings > Product Setup > Security > Supervisory > Factory Service Mode as soon as it is not needed
LOW ON MEMORY: with 2nd line detail	Yes	The relay periodically checks the amount of free RAM memory available and the amount of free stack available for each task against pre-defined thresholds. The second line of the self-test indicates which of the tests failed. It asserts this self-test if those tests fail.	Every five seconds	Contact the factory
MAINTENANCE ALERT: 4L Discrepancy	No	A discrepancy has been detected between the actual and desired state of a latching contact output of an installed type "4L" module	Upon initiation of a contact output state change	Verify the state of the output contact and contact the factory if the problem persists
MAINTENANCE ALERT: Bad IRIG-B Signal	No	A bad IRIG-B input signal has been detected	Monitored whenever an IRIG-B signal is received	Ensure the following: - The IRIG-B cable is properly connected. - Proper cable functionality (that is, check for physical damage or perform a continuity test). - The IRIG-B receiver is functioning. - Check the input signal level (it can be less than specification). If none of these apply, then contact the factory.
MAINTENANCE ALERT: Bad PTP Signal	No	No PTP enabled port has good PTP signal input	Activated when no acceptable signal is being received	Ensure the following: - The Ethernet cable(s) are properly connected. - At least one PTP grandmaster-capable clock is functioning. - If a strict power profile (PP) is enabled, that entire network is PP compliant. - The network is delivering PTP messages to the relay.
MAINTENANCE ALERT: Direct Ring Break	No	Direct input and output settings are configured for a ring, but the connection is not in a ring	Every second	Check direct input and output configuration and wiring
MAINTENANCE ALERT: FIRST ETHERNET FAIL SECOND ETHERNET FAIL THIRD ETHERNET FAIL	Yes	A link loss detection on an Ethernet port. The link loss is due to unplugging the cable or the switch port being down.		Check the connection
MAINTENANCE ALERT: Front Panel Trouble	No	The graphical front panel is not responsive for more than five seconds. The relay is still protecting, and the main CPU is not affected by this self-test.	Every second	Contact the factory
MAINTENANCE ALERT: GFP Version Mismatch	No	The graphical front panel firmware revision is not synchronized with that of the CPU module in the relay	Whenever connection is established between the graphical front panel and the CPU module in the relay	Perform a UR firmware upgrade with the graphical front panel connected to the CPU module in the relay. It can be done using any communication interface (Ethernet or USB). This synchronizes the graphical firmware revision with that of the relay. If trouble persists, contact the factory.
MAINTENANCE ALERT: Oscillatory GOOSE	No	A data item in a configurable GOOSE data set is oscillating	Upon scanning of each configurable GOOSE data set	Evaluate all logic pertaining to this item
MAINTENANCE ALERT: Replace Battery	Yes	The battery is weak or not functioning. It powers the real time clock. This message displays as Battery Fail in the event records. When the battery weakness reaches a critical level, the message displays persistently on the front panel and no front panel key navigation is possible.	Every five seconds. The error message displays after 60 seconds if the problem persists.	Replace the battery as outlined in the Maintenance chapter. To minimize the disruption until battery replacement, temporarily disable the battery fail function under Settings > Product Setup > User-Programmable Self Tests.
MAINTENANCE ALERT: SFP MODULE # FAIL	No	A faulty small form-factor pluggable port (SFP) or unplugging of the SFP generates this self test message		The web page "SFP Transceiver Information" described in the previous row applies for this self test as well. The "SFP Module Fail" has higher priority and it suppresses the "Ethernet Fail" target message. The "SFP MODULE FAIL FUNCTION" setting enables/disables this self test. The target for this self test is priority-based, with the third one being the highest priority. For example, if all three SFP modules fail, then the third SFP target is activated. If the third SFP module failure resolves, then the second SFP target is activated.
MAINTENANCE ALERT: SNTP Failure	No	The SNTP server is not responding	Every 10 to 60 seconds	Check that Ethernet cable(s) are properly connected. Check that configuration for the SNTP server corresponds to the actual server settings. Check connectivity to the server (ping the server IP address). Check that UR settings for both SNTP servers are configured with different IP addresses and port numbers.

Error	Latched?	Description	Test frequency	Action
PBEthPort-# Offline (Not B90, C30, L60		Process Bus Module Ethernet port failure. Error registers when an enabled port fails.	Every five seconds	Check connection to network switch/ Merging Unit and network switch
PB SFP Module # Fail (Not B90, C30, L60		Small form-factor pluggable port (SFP) at back of Process Bus Module is faulty or unplugged	Every five seconds	Connect or replace with same SFP type
PROTOTYPE FIRMWARE: Self Test Error		Seen until the build is tagged as being 'release candidate' or 'gold' build	Seen on startup and then continuous	Update firmware to either of these builds
RRTD COMM FAIL: (Not B90) Self Test Error	No	Communications with remote RTD unit (RRTD) or GPM-F failed for longer than 10 seconds	Runs only if "Com2 Usage" is set to RRTD or RRTD&GPM-F. Checked every five seconds.	Check COM2 port settings, check RS485 cables
RxGOOSE FAIL: Missing messages	No	One or more RxGOOSE messages are not being received	The self-test is activated when no message is received within the expected time interval, which is the time-to-live time in the previous message. This time can be from milliseconds to minutes.	Check GOOSE setup
RxGOOSE OFFLINE: COMM Path Incomplete	No	One or more RxGOOSE messages are not responding	Event driven. The test is performed when a device programmed to receive GOOSE messages stops receiving. This can be from 1 to 60 seconds, depending on GOOSE packets.	Check GOOSE setup
OSC FIXED GOOSE: Self Test Error	No	A FlexOperand configured in DNA and UserSt bit pair is oscillating	Upon scanning each DNA or UserSt bit pair	Check Fixed GOOSE oscillation history on UR web page and evaluate all logic pertaining to this item
AGGR CONFIG MISMATCH (N60 only)	Yes	There is a limitation when using six PMUs. The self-test trips when any of the following acceptable conditions are violated. - Two aggregators are allowed when using six PMUs, IEEE C37.118, and a 120/100 reporting rate - One ASDU is allowed when using six PMUs, IEC 90-5, and a 60/50 reporting rate - One ASDU and one aggregator are allowed when using six PMUs, IEC 90-5, and a 120/100 reporting rate	Event driven	Reconfigure aggregators according to the rules, as follows: - For C37.118 with six PMU software option, the following is acceptable: a. 20/100 reporting rate: 2 aggregators are allowed - For 90-5 with six PMU software option, the following are acceptable a. 60/50 reporting rate: six PMUs can be supported with one ASDU only b. 120/100 reporting rate: six PMUs can be supported with one ASDU and one aggregator combination only
SETTINGS SAVE ERROR: Contact Factory	Yes	The relay failed to store the settings to the flash memory	When a setting is changed	Contact the factory
STORAGE MEDIA ALARM: Self Test Error	No	The CPU module fails to read from or write to the Compact Flash (CF) card inside the module. The CF card stores certain non-volatile data, such as event records, oscillography and datalogger records, fault report values, and non-volatile actual values. Settings are not stored in CF and hence are unaffected by this self-test.	On power up. Afterwards, every time the CPU accesses the CF card for reading or writing	Contact the factory
SV# STREAM TROUBLE ON: (Not B90, C30, L60)	Yes	Asserted when 1. "4 out of 5 lost" errors are detected 2. No sampled values have been received for ~2 power cycles 3. Mismatch of test mode or simulation bit between UR and subscribed SV streams 4. Merging units subscribed by UR are not synchronized to the same grandmaster and the drift is ~2 power cycles 5. Sampled values subscribed by the relay are not synchronized according to the SMPSYNCH CHECK setting defined in the relay 6. Quality of the received sampled values is not acceptable (either the quality is invalid, or questionable with Quality Check = Reject Questionable)	Every protection pass	Check: 1. Connection between Merging Unit (MU) and relay 2. SV stream configuration in the relay is matching the SV stream, for example check svID and confRev fields 3. Check the Actual Values > PB Module > RXSV status> rxsv1(16) page in the EnerVista software to verify the Sync Status, Quality, and delays of the received sampled values and troubleshoot accordingly 4. Check that all merging units subscribed by the UR are synchronized according to the SMPSYNCH CHECK setting
SYSTEM EXCEPTION: Press RESET key	Yes	Abnormal restart from modules being removed or inserted while the Product is powered-up, when there is an abnormal DC supply, or as a result of internal relay failure.	Event driven	Contact the factory
TEMP MONITOR: OVER TEMPERATURE	Yes	The ambient temperature is greater than the maximum operating temperature (+80°C)	Every hour	Remove the Product from service and install in a location that meets operating temperature standards
UNIT NOT CALIBRATED: with 2nd line DSP slot number detail	Yes	DSP module is not calibrated or calibration data is out of range	On relay startup	The respective DSP module has to be replaced, contact factory service
VOLTAGE MONITOR: with 2nd line detail Power Supply 12V Low Power Supply 12V High Power Supply 5V Low Power Supply 5V High	Yes	The relay detected a problem with the internal voltage rails for longer than 25 seconds	Every five seconds	Contact GE customer service
WRONG TRANSCEIVER:: Self Test Error	Yes	The type of SFP does not match the CPU type. The SFP is a silver device that plugs into the rear of the CPU module. T-type CPU = All ports support fiber SFPs only U-type CPU = Maintenance port needs RJ45 SFP and the other two ports fiber SFPs V-type CPU = All ports support RJ45 SFPs only The consequence of an incorrect SFP can range from damage to the Product to no power information for the Product on its web page (enter IP address in a web browser, then click the SFP Transceiver Information — only the type of SFP displays and not power data).		A web page "SFP Transceiver Information" is provided. This page displays the type of the SFP in it. This data is to be used with the CPU type to know the cause of the problem.

11.3.5 INSTANTANEOUS PROTECTION ELEMENTS TRIP SECURITY

Some self-tests are not fast enough to detect erroneous data and block protection elements, requiring additional measures. A bit-flip in program memory is typically detected during a memory scan, which may be too late to inhibit instantaneous protection element. To secure instantaneous elements, in addition to the self-tests described, there are supervising elements that validate “fault” conditions and release IOC and differential elements operation.

These trip security elements use currents samples and phasors from the same sources as supervised protection elements to detect independently true “fault” conditions from IOC or differential. Trip security elements do not have any user settings and are enabled as soon as corresponding instantaneous elements are enabled. During laboratory testing, these elements can be disabled by activating any IED test mode via the ***SETTINGS > TESTING > IED MODE CONFIG*** menu by setting ***IED MODE*** to anything except `On`.

Trip security elements do not affect protection performance in any way.

Instantaneous Overcurrent

All enabled Phase IOC, Negative-Sequence, and Neutral IOCs in the active setting group are supervised by the trip security element. The goals of the IOC trip security are as follows:

- Detect erroneous operate current due to wiring or data acquisition problem resulting in one phase current dropping to zero, resulting in erroneous negative-sequence and neutral currents
- Justify current phasor magnitude increase with simultaneous current changes from samples

This is achieved by comparing current values of the current phasors and samples change with the values taken two cycles before. Additionally, trip security elements monitor "pre-fault" current to detect if operate condition is happening as a result of current decrease instead of increase.

The element is armed when there are no disturbances in currents for five cycles.

Differential elements (if applicable to the product)

Differential trip security runs for each differential zone. It monitors if differential current increase above the pickup setting is confirmed by the disturbance detectors 50DD for each differential zone input. When a differential zone fault occurs and at least two zone inputs carry some load, at least two disturbance detectors have to be activated. Or when there is no load at any zone inputs (zone is energized but does not carry any load), at least one disturbance detector has to be activated.

Consequently:

- If there is not any disturbance detector activation in at least one zone input — Differential trip is inhibited
- If there is just one zone input disturbance detector activation but load is present in at least two zone inputs prior to the “fault”, and if IOC trip security also confirms erroneous current — Differential trip is inhibited
- If there is more than one disturbance detector zone input activation — Differential trip is allowed (normal scenario)
- If differential trip is inhibited by the trip security element —active setting group change is not allowed

Activation of the 50DDs is essential especially when there is load in at least two zone inputs prior to the zone fault. Sensitivity of the 50DD is defined by the ***SETTINGS > PRODUCT SETUP > DISPLAY PROPERTIES > CURRENT CUT-OFF LEVEL*** setting with a range of 0.002pu to 0.02pu of the zone input CT. In case of the high-resistive zone fault there may be enough current change in the source zone input causing sufficient differential current, but small change in the load zone input-this situation can be addressed by reducing CURRENT CUTOFF LEVEL setting to the sufficient sensitivity level. 50DD operates if there is a change at least 2 x CUTOFF in either positive-sequence, or negative sequence or zero-sequence currents.

11.3.6 HARDFIBER MAJOR SELF-TEST ERROR MESSAGES

In addition to those provided by the standard UR-series devices, the UR devices implement HardFiber self-tests. These are listed here. Any abnormal diagnostic condition indicated by the LEDs or the critical failure relay also

results in a self-test message, so troubleshooting is described here. For other relays, such as the B95Plus, see that product's instruction manual.

Error	Description	Severity	Action
EQUIPMENT MISMATCH	The number or type of installed hardware modules does not match the order code stored in the CPU. The standard UR-series Equipment Mismatch self-test is extended to cover the possible presence of a Process Card.	Protection is not available and all contact outputs and shared outputs are de-asserted	Check all modules against the order code. Ensure they are inserted properly, and cycle the control power. If a module has intentionally been added or removed use the Update Order Code command to notify the relay that the current module configuration is correct.
MODULE FAILURE	UR-series device module hardware failure detected	Protection is not available and all contact outputs and shared outputs are de-asserted	Contact the factory and supply the failure code noted in the display. Text in the message identifies the failed module (for example, H81). If operated on a Process Card failure, the Module Fail self-test seals-in (latches) till the UR-series device is restarted.
PROCESS BUS FAILURE	Mission critical data is not available via the process bus. An AC quantity is considered critical if both AC bank origins and the crosschecking settings are other than None. This self-test is also initiated by an AC input discrepancy being detected. See the description in the Crosschecking setting in the HardFiber manual for further information. In addition, this self-test can be initiated by user logic responding to loss of critical contact input/output or other data using the Process Bus Failure Operand user-programmable self-test setting. This setting is located in the Settings > Product Setup > User-Programmable Self Test menu.	Protection is not available and all contact outputs and shared outputs are de-asserted	First rectify any Process Bus Trouble and Brick Trouble self-test errors. Check the actual value of the operand referenced by the Process Bus Failure Operand setting, and if "On," determine the cause and rectify. If the problem persists with the foregoing all clear, the cause must be an AC input discrepancy, which is typically the result of problems in the input signals to the Bricks, or faults in the Brick input conditioning hardware. If the error was annunciated the first time significant signal was encountered, suspect the former cause and check the copper connections external to the Brick. Where multiple UR-series devices have self-test errors, look for common causes. To further isolate AC input discrepancy errors, put the relay in test-isolated mode, then one by one, temporally change an AC bank Crosschecking setting to None, until the Process Bus Failure clears. Once the problem AC bank has been identified, the values from each of the two Bricks can be examined individually by temporarily mapping each to an AC bank with a single origin.

11.3.7 HARDFIBER MINOR SELF-TEST ERROR MESSAGES

Error	Description	Severity	Action
BRICK TROUBLE	Brick internal self-testing has detected trouble internal to the Brick	This self-test error does not directly inhibit protection. However, some or all of the affected Brick inputs/outputs may not be available to the UR device.	Check the Brick environment for over/under temperatures and the voltage of its power source. If the ambient temperature and supply voltage are within Brick specifications, consult the factory. Troubles resulting from a Brick output failing to respond to an output command can only be detected while the command is active, and so in this case the target is latched. A latched target can be unlatched by pressing the front panel reset key if the command has ended, however the output can still be non-functional.
PROCESS BUS TROUBLE	Communications problems with one or more Bricks. The text of the message identifies the affected field units. This self-test is initiated by low received signal levels at either the Brick or Process Card end, and by the sustained failure to receive poll responses from the proper Brick.	This self-test error does not directly inhibit protection. However, the affected Brick inputs/outputs may not be available to the UR device.	Check the field unit actual values. An indication of equipment mismatch means that messages are being received from a Brick, but there is a discrepancy between the settings and the actual Brick serial number, order code, and/or core number. Check that the correct core on the correct Brick is patched through to the correct Process Card port, and that the field unit settings are correct. An indication of communications loss means that no messages are being received. Check that the patching is correct, and that the Brick has power. If that is not the problem, use a professional optical fiber connector cleaning kit to clean both sides of all optical fiber connections from the Process Card through to the affected Brick. If the problem continues after cleaning, consult the factory.
RTD TROUBLE			
Self Test Error	The Brick is reporting that the sensed RTD field connection does not match that of an RTD or the reported DC input value is outside of the RTD temperature range, greater than 250°C (likely open sensor circuit fault) or less than -50°C (likely shorted sensor fault).	Not latched	Check field RTD settings and connections
TDR TROUBLE			
Self Test Error	The Brick is reporting that the sensed transducer field connection does not match that of a transducer, or the reported DC input value is outside of the set transducer input range, or the minimum value setting is equal to the maximum value setting.	Not latched	Check field transducer settings and connections

CHAPTER 12

APPLICATION OF SETTINGS

12.1 CHAPTER OVERVIEW

This chapter contains the following sections:

Chapter Overview 875
Overview 876
Phase distance elements (stepped distance scheme) 877
Ground distance elements (stepped distance scheme) 879
Protection signaling schemes 882
Series compensated lines 888
Phase distance through power transformers 891

12.2 OVERVIEW

This chapter provides general application guidelines for stepped distance, overcurrent, and pilot protection. Where relevant, design details and performance characteristics of the D30 are given to facilitate the process of setting the relay for a given application.

Impact of memory polarization

The relay uses a memorized positive sequence voltage as a polarizing signal in order to achieve dependable operation for forward faults and secure non-operation for reverse faults.

The dynamic shift of the characteristic ensures improved directionality, but it also means that if a backup function is required for a reverse fault on the bus, then it is appropriate to reverse Zone 34 so that a time delayed backup function can be obtained. As mentioned earlier, it can be beneficial to also avoid extremely large reach settings by setting a remote backup so that it is reverse looking. This strategy is beneficial if the reduced reach enhances the discrimination between the load and fault conditions.

High set overcurrent elements

Especially at low SIR values, fast fault clearance times can be seen as extremely important, from both system stability, and equipment damage viewpoints. The high-set overcurrent element, when set appropriately, can be extremely useful in achieving these goals. It helps the setting calculations if the system impedances are reasonably well known.

Set the overcurrent pickup to the greater of the following values:

- The maximum infeed seen by the relay, for a close in reverse fault
- The maximum fault level seen by the relay for a fault at 100% of the protected line

The maximum error of the phase overcurrent elements is below 2%. Use a safety factor of 1.25 to account for relay errors and system impedance uncertainty.

If CT saturation is an issue, such as close to a generation where long lasting dc components are likely to saturate the CTs, note that the instantaneous overcurrent elements require 1.33 cycle of data to operate for a multiple of pickup of 1.01. For higher multiples of pickup, the relation between the multiple of pickup and the amount of data required for operation before complete CT saturation is approximately linear. For example, for a multiple of pickup of 4, approximately 1.33 / 4 = 0.332 of power cycle is required by the phase instantaneous overcurrent element to operate. Do not confuse the above information with the operating time, which includes some inherent delays such as a trip rated output contact.

12.3 PHASE DISTANCE ELEMENTS (STEPPED DISTANCE SCHEME)

Phase current supervision and the fuse failure element

The phase-to-phase (delta) current is used to supervise the phase distance elements, primarily to ensure that in a de-energized state the distance elements are not picked up due to noise or induced voltages on the line.

This supervision feature can also be employed to prevent operation under fuse failure conditions. This requires that the setting be above maximum load current and less than the minimum fault conditions for which operation is expected. This potential problem can be avoided by the use of a separate fuse fail function, which means that the phase current supervision can be set much lower, typically two times the capacitance charging current of the line.

The usage of the fuse fail function is also important during double-contingency events, such as an external fault during fuse fail conditions. The current supervision alone does not prevent maloperation in such circumstances.

Keep in mind that the fuse failure element provided on the Product needs some time to detect fuse fail conditions. This can create a race between the instantaneous zone 1 and the fuse failure element. Therefore, for maximum security, it is recommended to both set the current supervision above the maximum load current and use the fuse failure function. The current supervision prevents maloperation immediately after the fuse fail condition giving some time for the fuse failure element to take over and block the distance elements permanently. This is of a secondary importance for time-delayed zones 2 and up as the fuse failure element has some extra time for guaranteed operation. The current supervision can be set below the maximum load current for the time delayed zones.

Blocking distance elements during fuse fail conditions are not be acceptable in some applications and/or under some protection philosophies. Applied solutions vary from not using the fuse failure element for blocking at all, to using it and modifying—through FlexLogic and multiple setting groups mechanisms—other protection functions or other relays to provide some protection after detecting fuse fail conditions and blocking the distance elements, and to using it and accepting the fact that the distance protection does not respond to subsequent internal faults until the problem is addressed.

Note:
To be fully operational, the Fuse Failure element must be enabled, and its output FlexLogic operand must be indicated as the blocking signal for the selected protection elements.

Note:
For convenience, the current supervision threshold incorporates the $\sqrt{3}$ factor.

Phase distance zone 1

As typically used for direct tripping, the zone 1 reach must be chosen so that it does not extend beyond the far end(s) of the protected line. Zone 1 provides nominally instantaneous protection for any phase fault within a pre-determined distance from the relay location. To ensure that no overreach occurs typically requires a setting of 80 to 90% of the line length, which covers CT and VT errors, relay inaccuracy and transient overreach, as well as uncertainty in the line impedance for each phase, although transposition can minimize this latter concern.

The total relay inaccuracy, including both steady state and transient overreach even when supplied from CVTs under the source impedance ratios of up to 30, is below 5%.

Phase distance zone 2

Zone 2 is an overreaching element, which essentially covers the final 10 to 20% whole of the line length with a time delay. The additional function for zone 2 is as a timed backup for faults on the remote bus. Typically the reach is set to 125% of the positive-sequence impedance of the line, to ensure operation, with an adequate margin, for a fault at 100% of the line length. The necessary time delay must ensure that coordination is achieved with the clearance of a close-in fault on the next line section, including the breaker operating time.

The zone 2 time delay is typically set from 0.2 to 0.6 seconds, although this can have to be reviewed more carefully if a short line terminates on the remote bus, since the two zone 2 elements can overlap and therefore not coordinate in a satisfactory manner.

Phase distance zone 3

If a remote backup philosophy is followed, then the reach of this element must be set to account for any infeed at the remote bus, plus the impedance of the longest line which terminates on this remote bus. The time delay must coordinate with other time-delayed protections on any remote line. Circuit loading limitations created by a long zone reach can be overcome by using lens or quadrilateral characteristics and/or a load encroachment supervising characteristic. Consider also a situation where the load impedance can enter into the relay characteristic for a time longer than the chosen time delay, which can occur transiently during a system power swing. For this reason, use the power swing blocking function.

Phase distance zone 4

A further contribution to remote backup, the reach of this element must be set to account for any infeed at the remote bus. The time delay must coordinate with other time-delayed protections on the next line. The use of a lens characteristic or the load encroachment element is advantageous if load limits are a problem.

To avoid extremely large reach settings, the Product has the ability to implement any element so that it is reverse looking, which then can provide a back up for the longest line terminated on the local bus. This strategy can be beneficial if the reduced reach helps discrimination between the load and fault conditions, but must be implemented at both ends of the protected line.

Phase distance zone 5

An additional fifth phase distance zone can be used in special applications. This zone can be the start zone for arming tripping from all other zones, in both forward and reverse directions of the of protected line. This zone can also be used as an additional reverse-looking zone for implementation of two reverse-looking zones, thus providing two zone backup reverse-looking protection. The fifth distance zone can be used as an alarm zone, indicating that load impedance is approaching the zone characteristic.

12.4 GROUND DISTANCE ELEMENTS (STEPPED DISTANCE SCHEME)

Neutral current supervision

The current supervision for the ground distance elements responds to an internally calculated neutral current (3 × I_0). Base the setting for this element on twice the zero-sequence line capacitance current or the maximum zero-sequence unbalance under maximum load conditions. Do not use this element to prevent an output when the load impedance is inside the distance characteristic on a steady state basis.

Polarizing current and non-homogeneity correction angle of the quad characteristic

An ideal reactance line for single-line-to-ground faults is polarized from the fault current flowing through the fault resistance. Such a line defines constant reach and is implemented by the following angle comparator:

$$I \times Z - V \text{ vs. } j \times I_F$$

The relay can only approximate the unknown fault current by the zero-sequence or the negative-sequence currents measured at the relaying point. Depending on system parameters, either the zero-sequence or the negative-sequence current presents better approximation of the fault current angle.

Given the equivalent systems shown in the following figure, the angular difference between the zero-sequence or negative-sequence currents at the relay, and the fault current can be calculated as follows:

$$\theta_0 = \text{angle } (I_F / I_{0_RELAY} = \text{angle } [Z_{0A} + Z_{0L} + Z_{0B}] / [Z_{0B} + (1\text{-}d)Z_{0L}]$$

$$\theta_2 = \text{angle } (I_F / I_{2_RELAY} = \text{angle } [Z_{1A} + Z_{1L} + Z_{1B}] / [Z_{1B} + (1\text{-}d)Z_{1L}]$$

where:

- A is the local equivalent system
- B is the remote equivalent system
- L is the line
- d is the per-unit (pu) intended reach of the zone (typically 0.7 to 0.9)

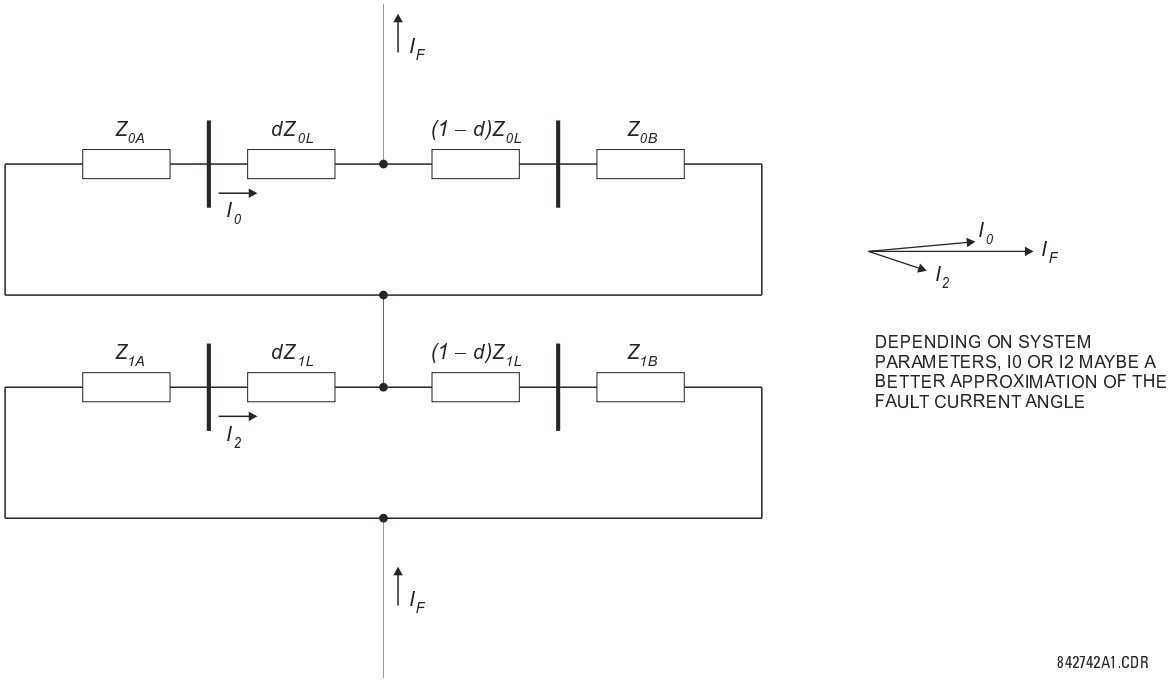

Figure 415: Understanding system homogeneity

If abs(θ_0) < abs(θ_2), the zero-sequence network is more homogenous (the zero-sequence current better approximates the fault current), and zero-sequence polarizing should be selected. Otherwise, negative-sequence is a better polarizing signal.

The calculated θ angles reflect errors between the ideal and applied polarizing angles. Therefore, after selecting the polarizing current, the corresponding angle is chosen as the non-homogeneity correction angle. For example, calculations yielding θ_0 = 5° and θ_2 = –1° result in selecting the negative-sequence for polarization, and the value of –1° for non-homogeneity correction.

Often the non-homogeneity correction angle is used to apply extra security rather than correct the angle between the relay and the fault currents. For extra security, set the angle to negative values.

Approach with care the ability to select an optimum polarizing signal and to correct for non-homogeneity. The best polarizing signal and the correcting angle both depend on system parameters and intended reach of the zone. If the system configuration is static, the selection is straightforward.

If the system configuration can change significantly, consider all the relevant system topologies for calculations. Either a compromise choice is made, or different settings are applied via switchable setting groups depending on system conditions. In highly non-homogenous and dynamic systems where the correction for non-homogeneity is not feasible, consider conservative reach (reduced) and/or correction angle (negative) settings.

Ground distance zone 1

The zone 1 reach must be set so that nominally instantaneous operation does not extend beyond the end of the protected line. However this can be more complicated than for the phase elements, because of zero sequence mutual induction with an adjacent parallel line, possibly carried on the same tower, which can be out of service and grounded at multiple points. A fault beyond 100% of the protected line can cause overreach unless the reach is reduced significantly, sometimes as low as 65% of the line length. If the line being protected does not have a significant interaction with an adjacent circuit, then the typical 80% setting can be used. If there is significant mutual coupling between the parallel lines, then the mutual compensation feature of the ground distance elements can be used instead of a drastic reduction in the reach.

However, even in this case, there is more uncertainty compared with the phase distance elements because the zero-sequence impedance of the line and thus the zero-sequence-compensating factors can vary significantly due to weather and other conditions.

Ground distance zone 2

To ensure that zone 2 can see 100% of the line, inter-circuit mutual effects must be considered, as they can contribute to a significant under-reach. Typically this occurs on double circuit lines, when both lines carry the same current. Conduct an analytical study to determine the appropriate reach setting.

The main purpose of this element is to operate for faults beyond the reach of the local zone 1 element, and therefore a time delay must be used similar to the phase fault case.

Ground distance zone 3

This remote back up function must have a reach that is set to account for any infeed at the remote bus, plus the impedance of the longest line that terminates on this remote bus. Similar to the phase fault case, a zone 3 element must be time coordinated with timed clearances on the next section.

Ground distance zone 4

As a further contribution to a remote backup philosophy, the reach of this element must be set to account for any infeed at the remote bus. The time delay must coordinate with other time-delayed protections on the next line. The use of a lens characteristic or load encroachment element is advantageous when load limits are a problem. To avoid extremely large reach settings the D30 has the ability to implement any element, so that it is reverse looking. This strategy can be beneficial if the reduced reach enhances the discrimination between the load and fault conditions. When adopted, this approach must be implemented at both ends of the protected line.

Ground distance zones 5 and 6

Additional ground distance zones can be used in special applications. Each can be the start zone for arming tripping from all other zones, in both forward and reverse directions of the of protected line. Each can be used as an additional reverse-looking zone for implementation of two reverse-looking zones, thus providing two zone backup reverse-looking protection. Each can be used as an alarm zone, indicating that load impedance is approaching the zone characteristic.

12.5 PROTECTION SIGNALING SCHEMES

The relay includes the following common pilot-aided schemes:

- Direct under-reaching transfer trip (DUTT)
- Permissive under-reaching transfer trip (PUTT)
- Permissive over-reaching transfer trip (POTT)
- Hybrid permissive over-reaching transfer trip (Hybrid POTT)
- Directional comparison blocking
- Directional comparison unblocking

12.5.1 DIRECT UNDER-REACHING TRANSFER TRIP (DUTT)

This scheme uses an under-reaching Zone 1 distance element to key a transfer trip signal to the remote end(s), where on receipt, the DUTT pilot scheme operates without any additional supervision.

For proper operation of the scheme the Zone 1 phase and ground distance elements must be enabled and configured per rules of distance relaying.

The scheme generates an output operand (DUTT TX) that is used to transmit the signal to the remote end. Choices of communications channel include Remote Inputs/Outputs and telecommunications interfaces. When used with telecommunications facilities, assign the output operand to operate an output contact connected to key the transmitter at the interface.

Note that the same protection signaling can be used by a breaker failure scheme, in which case the signal can be sealed in by breaker fail for a time longer than the autoreclose *reclaim* time which then prevents autoreclose when not required.

A provision for an optional seal-in of the send signal is made to cover those situations where Power Line Carrier (PLC) signaling is used and the signal must be transmitted in a potentially noisy situation due to the fault.

The scheme output operand (DUTT OP) must be configured to interface with other relay functions, output contacts in particular, in order to make the scheme fully operational. Typically, the output operand is programmed to initiate a trip, breaker fail, and autoreclose, and to drive a user-programmable LED as per user application.

12.5.2 PERMISSIVE UNDER-REACHING TRANSFER TRIP (PUTT)

This scheme uses an under-reaching Zone 1 distance element to key a transfer trip signal to the remote end where it is supervised by the over-reaching Zone 2 distance elements.

For proper operation of the scheme the Zone 1 and 2 phase and ground distance elements must be enabled and configured per rules of distance relaying.

The scheme generates an output operand (PUTT TX) that is used to transmit the signal to the remote end. Choices of communications channel include Remote Inputs/Outputs and telecommunications interfaces. When used with telecommunications facilities the output operand should be assigned to operate an output contact connected to key the transmitter at the interface.

The ***PUTT RX PICKUP DELAY*** timer can be used to ride through spurious PLC receive signals.

The scheme output operand (PUTT OP) must be configured to interface with other relay functions, output contacts in particular, in order to make the scheme fully operational. Typically, the output operand is programmed to initiate a trip, breaker fail, and autoreclose, and to drive a user-programmable LED as per user application.

12.5.3 PERMISSIVE OVER-REACHING TRANSFER TRIP (POTT)

This scheme is intended for two-terminal line applications.

This scheme uses an over-reaching Zone 2 distance element to essentially compare the direction to a fault at both the ends of the line.

Ground directional overcurrent functions available in the relay can be used in conjunction with the Zone 2 distance element to key the scheme and initiate its operation. This provides increased coverage for high-resistance faults.

Good directional integrity is the key requirement for an over-reaching forward-looking protection element used to supplement Zone 2.

Any Flexlogic operand can be combined with responses from various protection elements, or be applied with extra conditions defined by Flexlogic equations. However the supplementary signal is primarily intended to be the output operand from the Neutral Directional Instantaneous Overcurrent element, or if applicable (some models), the negative Sequence Directional Instantaneous Overcurrent element.

Both of these elements have separate forward (FWD) and reverse (REV) output operands. Use the forward indication (e.g. NEUTRAL DIR OC1 FWD).

An important consideration is when one of the line terminals is open. It is then necessary to identify this condition and arrange for a continuous sending of the permissive signal or use a slower but more secure echo feature to send a signal to the other terminal, which is producing the fault infeed. With any echo scheme however, a means must be provided to avoid a permanent lock up of the transmit/receive loop. The echo co-ordination (***ECHO DURATION***) and lock-out (***ECHO LOCKOUT***) timers perform this function by ensuring that the permissive signal is echoed once for a guaranteed duration of time before going to a lockout for a settable period of time.

Recognize that in ring bus or breaker and a half situations it can be the line disconnect or a combination of the disconnect and/or the breaker(s) status that is the indication that the terminal is open.

The ***POTT RX PICKUP DELAY*** timer is included in the permissive receive path to ride through spurious receive outputs that can be produced during external faults, when power line carrier is utilized as the communications medium.

No current reversal logic is included for the overreaching phase and ground distance elements, because long reaches are not usually required for two terminal lines. A situation can occur however, where the ground distance element has an extended reach. This situation is encountered when it is desired to account for the zero sequence inter-circuit mutual coupling. This is not a problem for the ground distance elements in the D60 that do have a current reversal logic built into their design as part of the technique used to improve ground fault directionality.

Unlike the distance protection elements, the ground directional overcurrent functions do not have their reach well defined, therefore the current reversal logic is incorporated for the extra signal supplementing Zone 2 in the scheme. The transient blocking approach for this POTT scheme is to recognize that a permissive signal has been received and then allow a settable time ***TRANS BLOCK PICKUP DELAY*** for the local forward looking directional element to pick up.

The scheme generates an output operand (POTT TX) that is used to transmit the signal to the remote end. Choices of communications channel include Remote Inputs/Outputs and telecommunications interfaces. When used with telecommunications facilities the output operand is assigned to operate an output contact connected to key the transmitter at the interface. Power Line Carrier (PLC) channels are not recommended for this scheme since the PLC signal can be interrupted by a fault.

For proper operation of the scheme the Zone 2 phase and ground distance elements must be enabled and configured per rules of distance relaying. The Line Pickup element needs to be enabled and configured properly to detect line-end-open/weak-infeed conditions.

If used by this scheme, the selected ground directional overcurrent function(s) must be enabled and configured accordingly The output operand from the scheme (POTT OP) must be configured to interface with other relay functions, output contacts in particular, in order to make the scheme fully operational. Typically, the output operand is programmed to initiate a trip, breaker fail, and auto-reclose, and to drive a user-programmable LED as per user application.

12.5.4 HYBRID POTT SCHEME (HYB-POTT)

This scheme uses an over-reaching Zone 2 distance element to compare the direction to a fault at both ends of the line. Ground directional overcurrent functions available in the relay can be used in conjunction with the Zone 2 distance element to key the scheme and initiate its operation. This increases the coverage for high-resistance faults.

The scheme is intended for three-terminal applications and for weak-infeed conditions. As a long reach of the overreaching distance element can be required for three-terminal applications, transient blocking logic is provided for both distance and ground directional overcurrent elements. In order to cope with weak-infeed conditions, an echo feature is made available.

By default, the scheme uses the reverse-looking Zone 4 distance element to identify reverse faults. Additionally, reverse-looking ground directional overcurrent functions can be used in conjunction with Zone 4.

For proper operation of the scheme the Zone 2 and 4 phase and ground distance elements must be enabled and configured per rules of distance relaying. The Line Pickup element needs to be enabled and configured properly to detect line-end-open/weak-infeed and undervoltage conditions.

If used by this scheme, the selected ground directional overcurrent function(s) must be enabled and configured accordingly.

The scheme generates an output operand (HYBRID POTT TX) that is used to transmit the signal to the remote end. Choices of communications channel include Remote Inputs/Outputs and telecommunications interfaces. When used with telecommunications facilities, assign the output operand to operate an output contact connected to key the transmitter at the interface.

For more application recommendation, see the POTT scheme.

The output operand from the scheme (HYBRID POTT OP) must be configured to interface with other relay functions, output contacts in particular, in order to make the scheme fully operational. Typically, the output operand is programmed to initiate a trip, breaker fail, and auto-reclose, and to drive a user-programmable LED as per user application.

12.5.5 DIRECTIONAL COMPARISON BLOCKING

The scheme compares the direction to a fault at both ends of the line. Unlike the permissive schemes, the absence of a blocking signal permits operation of the scheme. Consequently, the scheme is biased toward dependability and requires an *on/off* type of signaling.

By default, this scheme uses only a forward-looking over-reaching Zone 2 distance element to identify forward faults. Ground directional overcurrent functions available in the relay can be used in conjunction with the Zone 2 distance element to increase the coverage for high-resistance faults.

By default, the scheme uses only a reverse-looking Zone 4 distance element to identify reverse faults. Ground directional overcurrent functions available in the relay can be used in conjunction with the Zone 4 distance element for better time and sensitivity coordination.

For proper operation of the scheme, the Zone 2 and 4 phase and ground distance elements must be enabled and configured per rules of distance relaying.

If used by this scheme, the selected ground directional overcurrent function(s) must be enabled and configured accordingly.

The scheme generates output operands (BLOCKING SCHEME TX INIT and BLOCKING SCHEME TX STOP) that are used control the transmission of signals to the remote end. Choices of communications channel include Remote Inputs/Outputs and telecommunications interfaces. When used with telecommunications facilities, assign the output operand to operate an output contact connected to key the transmitter at the interface.

A blocking scheme can be preferred over a Hybrid POTT scheme, because of shorter reach settings for the Zone 2 elements. This follows from the fundamental difference that all zone 2 elements are required to see an internal fault for the POTT approach, under all system conditions, which in turn, means that the reversed Zone 4 block initiate

elements must also have an increased reach. A blocking scheme on the other hand, can have much shorter Zone 2 reach settings if sequential clearance can be accepted. The simple rule to ensure that all faults can be cleared, is for each terminal to have a reach setting equal to the distance to the tap plus twice the distance from the tap to the remote terminal.

The Zone 2 element must have a coordinating timer ***BLOCK RX CO-ORD PKP DELAY***, to ensure that the blocking signal is received for all external faults that are within the set reach of the local overreaching Zone 2.

Transient blocking logic is implemented via the TRANS BLOCK timer, which continues to send a blocking signal for a settable time ***TRANS BLOCK RESET DELAY***, if it was being sent for at least 30 ms during the initial reverse fault set via ***TRANS BLOCK PICKUP DELAY***.

The output operand from the scheme (BLOCKING SCHEME OP) must be configured to interface with other relay functions, output contacts in particular, in order to make the scheme fully operational. Typically, the output operand is programmed to initiate a trip, breaker fail, and auto-reclose, and to drive a user-programmable LED as per user application.

12.5.6 DIRECTIONAL COMPARISON UNBLOCKING

The directional comparison unblocking scheme is used with a frequency shift keying (FSK) PLC that produces a loss-of-guard output during an actual loss-of-guard signal condition and during reception of the permissive keyed frequency when the received carrier signal changed from guard to permissive frequency. The loss-of-guard signal is preferably a normally-closed contact, allowing the scheme to get this signal if the communications equipment failed. This loss-of-guard output is connected to a contact input of the Product. The power line carrier also provides an output contact when the permissive frequency is received. This output is wired to any other contact input of the Product.

The directional comparison unblocking scheme allows a window of opportunity for tripping the breaker fast if the permissive signal gets attenuated by the fault to a level below the receiver's threshold. The guard signal is monitored, and the relay is allowed to trip for a loss of guard without receipt of the permissive signal, if the relay sees the fault in the forward, and not reverse direction by means of the forward looking distance zone 2 and ground directional forward, if configured, and reverse looking distance zone 4 and ground directional reverse, if configured.

The scheme is active and ready for operation when the ***DCUB BLOCK*** setting is off and the ***DCUB SCHEME FUNCTION*** setting is enabled. The user can disable or block the scheme by assigning any FlexLogic operand to the DCUB BLOCK setting. This operand can consist of any pre-defined logic, including a pilot cutout switch connected to any contact input of the Product. With this pilot cutout switch and the pre-defined logic state on and assigned to ***DCUB BLOCK***, the scheme is disabled. The directional comparison unblocking scheme supervises the operation and keying of all scheme functions. The lockout feature of the scheme also supervises all scheme functions. All timers are fully adjustable, with typical values indicated.

Lockout of the directional comparison unblocking scheme is established as follows. Lockout of the scheme is started for a time duration set by ***DCUB LOG TRIP WINDOW*** setting if:

- The scheme is enabled and not blocked (that is, the scheme is active), and
- no permissive RX signal is received, and
- any loss-of-guard signal is received

Lockout is sealed-in through an AND gate with the directional comparison unblocking scheme active and any loss-of-guard through ***GUARD HEALTHY RESET DELAY*** timer. The scheme thus remains blocked during longer loss-of-guard or channel conditions for any of the configured channels. The ***GUARD HEALTHY RESET DELAY*** timer ensures that the scheme remains locked out slightly longer after the loss-of-guard signal(s) is reset. This allows for all channel(s) stabilizing and contact denouncing. This timer determines how long the logic waits before enabling the directional comparison unblocking scheme when the communications channel is restored.

Operating of the directional comparison unblocking scheme consists of two parts: normal operation and loss-of-guard operation.

12.5.6.1 NORMAL OPERATION

Normal operation picks up under the following conditions:

- The scheme is enabled (***DCUB FUNCTION*** is enabled and ***DCUB BLOCK*** is off), and
- any permissive signal is received with its associated loss-of-guard signal (for example, DCUB RX1 and DCUB LOG1), and
- a fault is seen in the forward zone 2 distance elements or ground directional forward function (if configured), and
- the reverse zone 4 distance elements or ground directional reverse function (if configured) did not pickup to set the transient blocking, and
- the scheme is not locked out

If these conditions are met, the trip table is run, operating the scheme and asserting the DCUB OP FlexLogic operand. The trip table with the aid of the local phase selector and received RX signals determine what tripping operands are operated. During normal operation, the loss-of-guard signal is seen momentarily before the permissive DCUB RX signal is received for each channel being operated, as the channel transitions from guard to permissive frequency, but the scheme operates instantaneously after any DCUB RX signal is received.

12.5.6.2 LOSS-OF-GUARD OPERATION

The loss-of-guard operation picks up under the following conditions:

- The scheme is enabled (***DCUB FUNCTION*** is enabled and ***DCUB BLOCK*** is Off), and
- any loss-of-guard signal is received without its associated RX signal, and
- a fault is seen in the forward zone 2 distance elements or ground directional forward function (if configured), and
- the reverse zone 4 distance elements or ground directional reverse function (if configured) did not pickup to set the transient blocking.

If these conditions are met, then the ***DCUB LOG PICKUP DELAY*** timer is started. After this timer times out, the trip table is run, operating the scheme and asserting the DCUB OP FlexLogic operand. The trip table with the aid of the local phase selector and loss-of-guard signals determines what tripping operands are operated. The ***DCUB LOG PICKUP DELAY*** timer allows for any and all channel(s) to transition from guard to permissive before operating due to loss-of-guard in the presence of a forward fault. The time window of allowing the scheme to operate when no DCUB RX signal is received when any loss-of-guard was received is the difference between the ***DCUB LOG TRIP WINDOW*** and ***DCUB LOG PICKUP DELAY*** timers. When using default settings, this value is 150 – 8 = 142 ms. This means the scheme is unblocked and can trip during this time window if a forward fault is sensed.

12.5.6.3 KEYING THE CARRIER(S) UNDER NORMAL CONDITIONS

The keying signals, which allows the relay to key the permissive channel during normal permissive scheme operation by means of the DCUB TX1 through DCUB TX4 signals, are established as follows:

- The scheme is enabled (***DCUB FUNCTION*** is enabled and ***DCUB BLOCK*** is off), and
- a fault is seen in the forward zone 2 distance elements or ground directional forward function (if configured), and
- the reverse zone 4 distance elements or ground directional reverse function (if configured) did not pickup to set the transient blocking.

If these conditions are met, then the scheme keys the channel(s) by means of asserting transmit signals DCUB TX1 through DCUB TX4 with the aid of the local phase selector or zone 2 distance elements.

12.5.6.4 KEYING OF THE CARRIER DURING ECHO CONDITIONS

The echo signal, which allows the relay to key the permissive channel(s) through the DCUB TX1 through DCUB TX4 transmit operands during echo conditions when the local breaker opened, keys the carrier(s) during the following conditions:

The scheme is enabled (***DCUB FUNCTION*** is enabled and ***DCUB BLOCK*** is off), and

- the ***DCUB PERMISSIVE ECHO*** setting is “Enabled”, and
- the LINE PICKUP LEO PKP operand that detects the local breaker to be open picks up for a time set by ***LINE END OPEN PICKUP DELAY***, and
- any permissive signal DCUB RX1 through DCUB RX4 is received and any LOG1 to LOG4 is received, and
- a fault is not seen in the forward zone 2 distance elements or ground directional forward function (if configured) for at least 100 ms, and
- the reverse zone 4 distance elements or ground directional reverse function (if configured) did not pickup to set the transient blocking.

If these conditions are met, then the scheme echoes (transmits the DCUB TX1 through DCUB TX4 operands) the received permissive DCUB RX signal(s) back to the remote relay based on the echo table.

The keying or transmit signals DCUB TX1 through DCUB TX4 consist of all normal keying or echo keying conditions.

The scheme DCUB TRIP A, DCUB TRIB B, DCUB TRIP C, and DCUB TRIP 3P output operands are hard-wired to the trip output scheme. As such, if the trip output or breaker control operands (if the breaker control function is used) are used for tripping, the scheme is fully operational. The permissive key carrier signals DCUB TX1 through DCUB TX4 must still be assigned to the tripping/operating logic, and to output contacts as per the usual Product logic/output assignments.

12.6 SERIES COMPENSATED LINES

We recommend applying a combination of distance, ground directional overcurrent, and high-set overcurrent functions for protection of series compensated lines.

The setting rules described below must take into account variety of system configurations, particularly a status of series capacitors (in-service, by-passed). Either consider the worst-case topology or, if possible, apply adaptive settings through the multiple settings groups mechanism.

A line compensating capacitor is a bank of three physical capacitors and their overvoltage protecting devices (air gaps and/or MOVs). If none of the MOV/gaps conducts any significant current, the positive-, negative- and zero-sequence reactance of the three-phase bank equal the reactance of the actual (phase) capacitors. Under asymmetrical conditions, however, such as a single line to ground fault, when only one MOV/gap can operate, the series capacitor bank creates extra (series) asymmetry in addition to the fault (shunt) asymmetry. The positive-, negative- and zero-sequence impedances differ from each other and do not equal the impedance of the phase capacitors. Moreover, there can be mutual coupling between the sequence networks representing the series capacitor bank. This makes analytical analysis of fault conditions burdensome. For setting calculations, however, it is justified to assume the zero-, positive-, and negative-sequence reactance of the capacitor bank equal the reactance of the actual (phase) capacitors. This represents a worst-case low-current fault scenario, when the steady-state effects of series compensation are most weighty.

12.6.1 DISTANCE

Traditionally, the reach setting of an underreaching distance function is set based on the net inductive impedance between the potential source of the relay and the far-end busbar, or location for which the zone must not overreach. Faults behind series capacitors on the protected and adjacent lines need to be considered for this purpose. For further illustration, a sample system shown in the figure is considered.

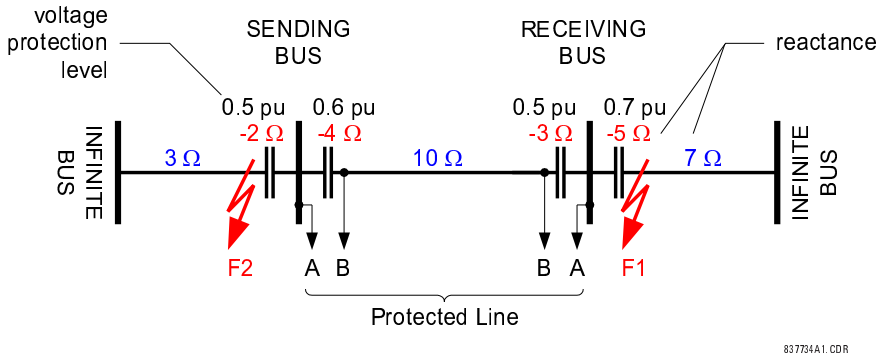

Figure 416: Sample series-compensated system

Assuming 20% security margin, the underreaching zone is set as follows.

At the Sending Bus, consider an external fault at F1 because the 5 Ω capacitor contributes to the overreaching effect. Any fault behind F1 is less severe as extra inductive line impedance increases the apparent impedance:

Reach Setting: 0.8 x (10 – 3 – 5) = 1.6 Ω if the line-side (B) VTs are used

Reach Setting: 0.8 x (10 – 4 – 3 – 5) = –1.6 Ω if the bus-side (A) VTs are used

The negative value means that an underreaching zone cannot be used as the circuit between the potential source of the relay and an external fault for which the relay must not pick-up, is overcompensated, for example capacitive.

At the Receiving Bus, consider a fault at F2:

Reach Setting: 0.8 x (10 – 4 – 2) = 3.2 Ω if the line-side (B) VTs are used

Reach Setting: 0.8 x (10 – 4 – 3 – 2) = 0.8 Ω if the bus-side (A) VTs are used

Practically, however, to cope with the effect of sub-synchronous oscillations, one can need to reduce the reach even more. As the characteristics of sub-synchronous oscillations are in complex relations with fault and system parameters, no solid setting recommendations are given with respect to extra security margin for sub-synchronous oscillations. It is strongly recommended to use a power system simulator to verify the reach settings or to use an adaptive Product feature for dynamic reach control.

If the adaptive reach control feature is used, set the ***PHS DIST Z1 VOLT LEVEL*** setting accordingly.

This setting is a sum of the overvoltage protection levels for all the series capacitors located between the relay potential source and the far-end busbar, or location for which the zone must not overreach. The setting is entered in pu of the phase VT nominal voltage (RMS, not peak value).

If a minimum fault current level (phase current) is causing a voltage drop across a given capacitor that prompts its air gap to flash over or its MOV to carry practically all the current, then the series capacitor is excluded from the calculations (the capacitor is immediately by-passed by its overvoltage protection system and does not cause any overreach problems).

If a minimum fault current does not guarantee an immediate capacitor by-pass, then the capacitor must be included in the calculation: its overvoltage protection level, either air gap flash-over voltage or MOV knee-point voltage, is used (RMS, not peak value).

Assuming none of the series capacitors in the sample system is guaranteed to get by-passed, the following calculations apply.

For the Sending Bus:

$$0.5 + 0.7 = 1.2 \text{ pu if the line-side (B) VTs are used}$$

$$0.6 + 0.5 + 0.7 = 1.8 \text{ pu if the bus-side (A) VTs are used}$$

For the Receiving Bus:

$$0.6 + 0.5 = 1.1 \text{ pu if the line-side (B) VTs are used}$$

$$0.6 + 0.5 + 0.5 = 1.6 \text{ pu if the bus-side (A) VTs are used}$$

12.6.2 GROUND DIRECTIONAL OVERCURRENT

Ground directional overcurrent function (negative-sequence or neutral) uses an offset impedance to guarantee correct fault direction discrimination. The following setting rules apply:

- If the net impedance between the potential source and the local equivalent system is inductive, then there is no need for an offset. Otherwise, the offset impedance shall be at least the net capacitive reactance.
- The offset cannot be higher than the net inductive reactance between the potential source and the remote equivalent system. For simplicity and extra security, the far-end busbar can be used rather than the remote equivalent system.

As the ground directional functions are meant to provide maximum fault resistance coverage, it is justified to assume that the fault current is very low and none of the series capacitors is guaranteed to get by-passed. Consider settings of the negative-sequence directional overcurrent protection element for the Sample Series Compensated System.

For the Sending Bus relay, bus-side VTs:

- Net inductive reactance from the relay into the local system = –2 + 3 = 1 Ω > 0; there is no need for offset
- Net inductive reactance from relay through far-end busbar = –4 + 10 – 3 = 3 Ω; the offset cannot be higher than 3 Ω
- We recommend using 1.5 Ω offset impedance

For the Sending Bus relay, line-side VTs:

- Net inductive reactance from relay into local system = –2 + 3 – 4 = –3 Ω < 0; an offset impedance ≥ 3 Ω must be used
- Net inductive reactance from relay through far-end busbar = 10 – 3 = 7 Ω; the offset cannot be higher than 7 Ω
- We recommend using 5 Ω offset impedance

For the Receiving Bus relay, bus-side VTs:

- Net inductive reactance from relay into local system = –5 + 7 = 2 Ω > 0; there is no need for offset
- Net inductive reactance from relay through far-end busbar = –3 + 10 – 4 = 3 Ω; the offset cannot be higher than 3 Ω
- We recommend using 1.5 Ω offset impedance

For the Receiving Bus relay, line-side VTs:

- Net inductive reactance from relay into local system = –3 – 5 + 7 = –1 Ω < 0; an offset impedance ≥ 1 Ω must be used
- Net inductive reactance from relay through far-end busbar = 10 – 4 = 6 Ω; the offset cannot be higher than 6 Ω
- We recommend using 3.5 Ω offset impedance

12.7 PHASE DISTANCE THROUGH POWER TRANSFORMERS

Phase distance elements of the Product can be set to respond to faults beyond any three-phase power transformer. The relay guarantees accurate reach and targeting for any phase fault. Moreover, the current and voltage transformers can be located independently on different sides of the transformer.

The following setting rules apply to this feature:

- A given distance zone is terminated by location of the VTs, not the CTs
- Consequently, the positive-sequence impedance of a transformer must be included in the reach setting only if the transformer is located between the potential source and the intended reach point
- The current signals require compensation if the transformer is located between the CTs and the intended reach point. If this is the case, set the CT connection setting to transformer connection and vector group as seen from the CTs toward the reach point. Otherwise, set the CT connection setting to `None`.
- The voltage signals require compensation if the transformer is located between the VTs and the intended reach point. If this is the case, set the VT connection setting to transformer connection and vector group as seen from the VTs toward the reach point. Otherwise, set the VT connection setting to `None`.
- The reach setting is entered in secondary ohms and as such must take into account location and ratios of VTs and CTs, as well as voltage ratio of the involved power transformer

The following equations explain the setting rules. Consider two applications as shown in the figure:

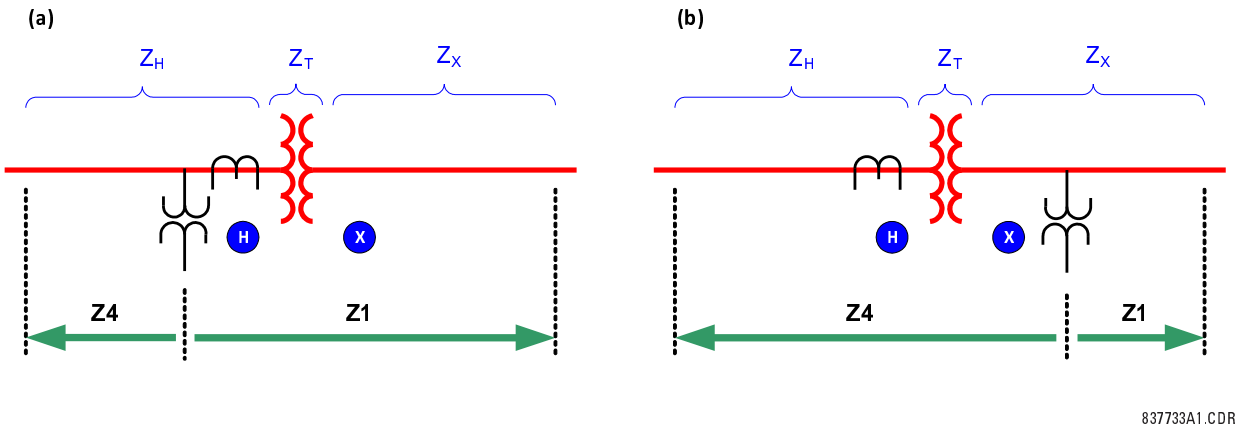

Figure 417: Phase distance protection looking through a power transformer

where

- Z_X = intended reach impedance for Zone 1 (primary ohms)
- Z_H = intended reach impedance for Zone 3Zone 4 (primary ohms)
- Z_T = positive-sequence impedance of the transformer
- V_X, V_H = transformer rated voltages
- n_{CT} = transformation ratio of the CTs
- n_{VT} = transformation ratio of the VTs
- $Z_{\#}$ = Zone # reach setting (secondary ohms)

12.7.1 ZONE SETTINGS

Zone 1 setting in application A

As the transformer is located between the potential source and the reach point for Zone 1, the reach impedance must include the positive-sequence impedance of the transformer. In addition, the primary impedance must be re-calculated for the voltage level of the VTs and CTs, and eventually, re-calculated to secondary quantities:

$$Z_1 = (Z_{T\ (at\ X)} + Z_x) \times (V_H/V_X)^2 \times (n_{CT}/n_{VT})$$

Zone #* setting in application A

As the transformer is not located between the potential source and the reach point for Zone 3Zone 4, the reach impedance must not include the positive-sequence impedance of the transformer. Because both VTs and CTs are located on the same side as the intended reach point, no correction for the transformer ratio is required. The primary impedance must be only re-calculated to secondary quantities:

$$Z_\# = Z_H \times (n_{CT}/n_{VT})$$

*# = 3 or 4 depending on model

Zone 1 setting in application B

As the transformer is not located between the potential source and the reach point for Z1, the reach impedance must not include the positive-sequence impedance of the transformer. The CTs are located on the other side of the transformer, thus transformer ratio must be included:

$$Z_1 = Z_X \times (V_H/V_X) \times (n_{CT}/n_{VT})$$

Zone # setting in application B

As the transformer is located between the potential source and the reach point for Zone 3Zone 4, the reach impedance must include the positive-sequence impedance of the transformer. The VTs are located on the other side of the transformer, thus transformer ratio must be included:

$$Z_\# = (Z_{T\ (at\ H)} + Z_H) \times (V_H/V_X) \times (n_{CT}/n_{VT})$$

*# = 3 or 4 depending on model

where

- Z_X = intended reach impedance for Zone 1 (primary ohms)
- Z_H = intended reach impedance for Zone 3Zone 4 (primary ohms)
- Z_T = positive-sequence impedance of the transformer
- V_X, V_H = transformer rated voltages
- n_{CT} = transformation ratio of the CTs
- n_{VT} = transformation ratio of the VTs
- $Z_\#$ = Zone # reach setting (secondary ohms)

12.7.2 EXAMPLE

Given the following for the system shown in the previous section:

- Z_X = 30 Ω ∠85° (intended reach of Zone 1)
- Z_H = 0.06 Ω ∠88° (intended reach of Zone #)

- n_{CT} = 8000:5 = 1600 (located at H)
- n_{VT} = 315000:120 = 2625 (located at X)
- Transformer: 13.8/315 kV, 150 MVA, 10%, delta/wye, 315 kV side lagging 30°

The transformer impedance is:

$$Z_{T\ (at\ H)} = 10/100 \times 13.8^2 / 150 = 0.127\ \Omega\ \angle 90°$$

The Zone 1 settings are:

$$Z1 = 30 \times (13.8/315) \times (1600/2625) = 0.8011\ \Omega\ \angle 85°$$

- ***PHS DIST Z1 REACH***: `0.80`
- ***PHS DIST Z1 RCA***: `85`
- ***PHS DIST Z1 XMFR VOL CONNECTION***: `None`
- ***PHS DIST Z1 XMFR CUR CONNECTION***: `Dy1`

The Zone # settings are:

$$Z\# = 0.127\ \angle 90° + 0.006\ \angle 88° \times (315/13.8) \times (1600/2625) = 2.601\ \Omega\ \angle 89.4°$$

PHS DIST Z# REACH: `2.60`

PHS DIST Z# RCA: `89`

PHS DIST Z# XMFR VOL CONNECTION: `Yd11`

PHS DIST Z# XMFR CUR CONNECTION: `None`

CHAPTER 13

THEORY OF OPERATION

13.1 CHAPTER OVERVIEW

This chapter contains the following sections:

Chapter Overview 895
Distance elements 896
Cross-country faults 908
Phase distance applied to power transformers 915
Ground directional overcurrent 920
Series-compensated lines 921
Single pole tripping 924
Fault locator 940
Subcycle distance algorithm 944

13.2 DISTANCE ELEMENTS

The distance elements use memory voltage for polarization. Additional supervising functions — different for ground and phase distance zones — complement a classical mho characteristic to enhance directional integrity and reach accuracy.

Note the following:

- To avoid overreaching during resistive faults under heavy pre-fault load conditions, the ground distance elements utilize a load-adaptive (zero-sequence polarized) reactance characteristic to supervise the base mho characteristic
- Both negative and zero-sequence currents are compared with the memory voltage to enhance directional integrity of the ground distance elements
- It is well-known that ground distance elements, as per the principle of distance relaying, can have limited accuracy during double-line-to-ground faults. In order to prevent maloperation in such cases, the ground elements are blocked by an extra “fault-type comparator” that utilizes the phase angle between the negative- and zero-sequence currents.
- The phase distance elements use reactance and memory polarized directional characteristics to supervise the mho characteristic
- Both ground and phase distance elements have the current supervision functions built-in

The quadrilateral distance characteristic uses the reactance, directional, and current supervising functions as described. Right and left blinders adjustable as to both the resistive and angular positions complete the characteristic.

See the Distance Characteristics section for more information regarding the distance characteristics. The Distance Elements Analysis section includes an example of analysis of the steady-state operation of the distance elements.

The relay provides five zones of distance protection (The L90 provides a sixth zone with the Distance Adaptation Package option). All zones are identical in terms of settings. However, zone 1 has extra adaptive mechanisms built-in to enhance the transient reach accuracy even when the voltage signals are supplied from poor quality voltage sources such as capacitive voltage transformers (CVTs). Ground zones 2 through 5, in turn, have an extra zero-sequence directional supervision implemented for their time-delayed operation after the memory expires. Consequently, zone 1 is recommended as an underreaching element, and zones 2 through 5 are recommended as overreaching elements and for time-delayed tripping.

The relay uses offset ground directional overcurrent functions as an optional supplement of the ground distance protection for pilot-aided schemes. The Ground Directional Overcurrent section describes the elements.

The relay provides for an adaptive distance reach control to cope with the overreaching and sub-synchronous oscillations when applied to, or in a near vicinity of series compensated lines. The Application on Series Compensated Lines section has information.

The distance elements use phase angle comparators to shape their characteristics as described in the Distance Characteristics section.

13.2.1 PHASOR ESTIMATION

The relay samples its input AC signals at 64 samples per power system cycle. A fast and accurate frequency tracking mechanism ensures accurate filtering and phasor estimation during off-nominal frequency conditions.

The phasor estimation process for both currents and voltages is based on the commonly used Fourier algorithm. Due to a different nature of signal distortions in the current and voltage signals digital pre-filtering algorithms have been, however, designed and optimized separately for the current and voltage channels.

The current signals are pre-filtered using an improved digital MIMIC filter. The filter removes effectively the DC component(s) guaranteeing transient overshoot below 2% regardless of the initial magnitude and time constant of the DC component(s). The filter has significantly better frequency response for higher frequencies as compared with

a classical MIMIC filter. This was possible without introducing any significant phase delay thanks to the high sampling rate used by the relay.

The voltage signals are pre-filtered using a special digital filter designed to cope with CVT transients. The patented filter combines filtering and memory actions enabling the relay to cope with CVT noise under high Source Impedance Ratios (SIRs). The filter controls underestimation of the fault voltage magnitude to less than 1% of the nominal and prevents certain phase angle anomalies that can be encountered under heavy CVT noise and high SIRs.

13.2.2 DISTANCE CHARACTERISTICS DEFINITIONS

The relay shapes its distance characteristics using phase angle comparators and voltage and current phasors estimated as described in the previous section.

The following definitions pertain to all of the distance functions:

- I_A, I_B, I_C — Phase A, B, and C current phasors
- I_G — Ground current from a parallel line
- V_A, V_B, V_C — Phase A to ground, phase B to ground, and phase C to ground voltage phasors
- ( )_1 — Positive-sequence phasor of ( ) derived from the phase quantities
- ( )_2 — Negative-sequence phasor of ( ) derived from the phase quantities
- ( )_0 — Zero-sequence phasor of ( ) derived from the phase quantities
- ( )M — Memorized value of ( )
- Z — Reach impedance (REACH ∠ RCA)
- Z_{REV} — Reverse reach impedance for non-directional applications (REV REACH ∠ REV REACH RCA + 180°)
- Z_D — Directional characteristic impedance (1 ∠ DIR RCA)
- Z_R — Right blinder characteristic impedance: Z_R = RGT BLD × sin (RGT BLD RCA) × 1∠ (RGT BLD RCA – 90°)
- Z_L — Left blinder characteristic impedance: Z_L = LFT BLD × sin (LFT BLD RCA) × 1∠ (LFT BLD RCA + 90°)
- K0 — Zero-sequence compensating factor: K0 = (Z0/Z1 MAG ∠ Z0/Z1 ANG) – 1
- K0M — Mutual zero-sequence compensating factor: K0M = 1/3 x Z0M/Z1 MAG ∠ Z0m/Z1 ANG
- Θ — Non-homogeneity angle setting (NON-HOMOGEN ANG)

13.2.3 DIRECTIONAL MHO CHARACTERISTIC

The dynamic 100% memory polarized mho characteristic is achieved by checking the angle between

- AB phase element — $(I_A – I_B) × Z – (V_A – V_B)$ and $(V_A – V_B)_1M$
- BC phase element — $(I_B – I_C) × Z – (V_B – V_C)$ and $(V_B – V_C)_1M$
- CA phase element — $(I_C – I_A) × Z – (V_C – V_A)$ and $(V_C – V_A)_1M$
- A ground element — $I_A × Z + I_0 × K0 × Z + I_G × K0M × Z – V_A$ and V_A_1M
- B ground element — $I_B × Z + I_0 × K0 × Z + I_G × K0M × Z – V_B$ and V_B_1M
- C ground element — $I_C × Z + I_0 × K0 × Z + I_G × K0M × Z – V_C$ and V_C_1M

The limit angle of the comparator is adjustable, enabling the user to shape the characteristic as an mho or a lens as shown in the figure. As explained in the Memory Polarization section, the memory-polarized mho characteristic has an excellent directional integrity built-in.

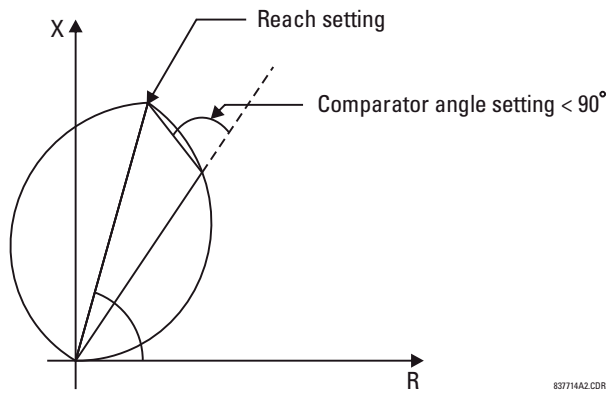

Figure 418: Mho (left) and lens (right) characteristics

13.2.4 NON-DIRECTIONAL MHO CHARACTERISTICS

The non-directional mho characteristic is achieved by checking the angle between

- AB phase element — $(I_A – I_B) \times Z – (V_A – V_B)$ and $(V_A – V_B) – (I_A – I_B) \times Z_{REV}$
- BC phase element — $(I_B – I_C) \times Z – (V_B – V_C)$ and $(V_B – V_C) – (I_B – I_C) \times Z_{REV}$
- CA phase element — $(I_C – I_A) \times Z – (V_C – V_A)$ and $(V_C – V_A) – (I_C – I_A) \times Z_{REV}$
- A ground element — $I_A \times Z + I_0 \times K0 \times Z + I_G \times K0M \times Z – V_A$ and $V_A – (I_A \times Z_{REV} + I_0 \times K0 \times Z_{REV} + I_G \times K0M \times Z_{REV})$
- B ground element — $I_B \times Z + I_0 \times K0 \times Z + I_G \times K0M \times Z – V_B$ and $V_B – (I_B \times Z_{REV} + I_0 \times K0 \times Z_{REV} + I_G \times K0M \times Z_{REV})$
- C ground element — $I_C \times Z + I_0 \times K0 \times Z + I_G \times K0M \times Z – V_C$ and $V_C – (I_C \times Z_{REV} + I_0 \times K0 \times Z_{REV} + I_G \times K0M \times Z_{REV})$

13.2.5 MHO REACTANCE CHARACTERISTIC

The mho reactance characteristic is achieved by checking the angle between

- AB phase element — $(I_A – I_B) \times Z – (V_A – V_B)$ and $(I_A – I_B) \times Z$
- BC phase element — $(I_B – I_C) \times Z – (V_B – V_C)$ and $(I_B – I_C) \times Z$
- CA phase element — $(I_C – I_A) \times Z – (V_C – V_A)$ and $(I_C – I_A) \times Z$
- A ground element — $I_A \times Z + I_0 \times K0 \times Z + I_G \times K0M \times Z – V_A$ and $I_0 \times Z$
- B ground element — $I_B \times Z + I_0 \times K0 \times Z + I_G \times K0M \times Z – V_B$ and $I_0 \times Z$
- C ground element — $I_C \times Z + I_0 \times K0 \times Z + I_G \times K0M \times Z – V_C$ and $I_0 \times Z$

If the mho characteristic is selected, the limit angle of the comparator is adjustable concurrently with the limit angle of the mho characteristic, resulting in a tent shape complementing the lens characteristic being effectively applied.

13.2.6 QUADRILATERAL REACTANCE CHARACTERISTIC

The quadrilateral reactance characteristic is achieved by checking the angle between

- AB phase element — $(I_A – I_B) \times Z – (V_A – V_B)$ and $(I_A – I_B) \times Z$
- BC phase element — $(I_B – I_C) \times Z – (V_B – V_C)$ and $(I_B – I_C) \times Z$
- CA phase element — $(I_C – I_A) \times Z – (V_C – V_A)$ and $(I_C – I_A) \times Z$

- A ground element — $I_A \times Z + I_0 \times K0 \times Z + I_G \times K0M \times Z - V_A$ and $(j \times I_0$ or $j \times I_2A) \times e^{j\Theta}$
- B ground element — $I_B \times Z + I_0 \times K0 \times Z + I_G \times K0M \times Z - V_B$ and $(j \times I_0$ or $j \times I_2B) \times e^{j\Theta}$
- C ground element — $I_C \times Z + I_0 \times K0 \times Z + I_G \times K0M \times Z - V_C$ and $(j \times I_0$ or $j \times I_2C) \times e^{j\Theta}$

The ground elements are polarized from either zero-sequence or negative-sequence current as per user-settings to maximize performance in non-homogenous systems. The polarizing current is additionally shifted by the user-selectable non-homogeneity correction angle.

13.2.7 REVERSE QUADRILATERAL REACTANCE CHARACTERISTIC

The reverse quadrilateral reactance characteristic is achieved by checking the angle between

- AB phase element — $(I_A - I_B) \times Z_{REV} - (V_A - V_B)$ and $(I_A - I_B) \times Z_{REV}$
- BC phase element — $(I_B - I_C) \times Z_{REV} - (V_B - V_C)$ and $(I_B - I_C) \times Z_{REV}$
- CA phase element — $(I_C - I_A) \times Z_{REV} - (V_C - V_A)$ and $(I_C - I_A) \times Z_{REV}$
- A ground element — $I_A \times Z + I_0 \times K0 \times Z_{REV} + I_G \times K0M \times Z_{REV} - V_A$ and $(j \times I_0$ or $j \times I_2A) \times e^{j(180+\Theta)}$
- B ground element — $I_B \times Z + I_0 \times K0 \times Z_{REV} + I_G \times K0M \times Z_{REV} - V_B$ and $(j \times I_0$ or $j \times I_2B) \times e^{j(180+\Theta)}$
- C ground element — $I_C \times Z + I_0 \times K0 \times Z_{REV} + I_G \times K0M \times Z_{REV} - V_C$ and $(j \times I_0$ or $j \times I_2C) \times e^{j(180+\Theta)}$

The ground elements are polarized from either zero-sequence or negative-sequence current as per user-settings to maximize performance in non-homogenous systems. The polarizing current is additionally shifted by the user-selectable non-homogeneity correction angle.

13.2.8 DIRECTIONAL CHARACTERISTIC

The directional characteristic is achieved by checking the angle between

- AB phase element — $(I_A - I_B) \times Z_D$ and $(V_A - V_B)_1M$
- BC phase element — $(I_B - I_C) \times Z_D$ and $(V_B - V_C)_1M$
- CA phase element — $(I_C - I_A) \times Z_D$ and $(V_C - V_A)_1M$
- A ground element — $I_0 \times Z_D$ and V_A_1M or $I_A_2 \times Z_D$ and V_A_1M
- B ground element — $I_0 \times Z_D$ and V_B_1M or $I_B_2 \times Z_D$ and V_B_1M
- C ground element — $I_0 \times Z_D$ and V_C_1M or $I_C_2 \times Z_D$ and V_C_1M

The characteristic and limit angles of the directional comparator are adjustable independently from the mho and reactance comparators. The directional characteristic improves directional integrity of the distance functions.

13.2.9 RIGHT BLINDER CHARACTERISTIC

The right blinder characteristic is achieved by checking the angle between the following signals:

- AB phase element — $(I_A - I_B) \times Z_R$ - $(V_A - V_B)$_and $(I_A - I_B) \times Z_R$
- BC phase element — $(I_B - I_C) \times Z_R$ - $(V_B - V_C)$_and $(I_B - I_C) \times Z_R$
- CA phase element — $(I_C - I_A) \times Z_R$ - $(V_C - V_A)$_and $(I_C - I_A) \times Z_R$
- A ground element — $I_A \times Z_R + I_0 \times K0 \times Z_R + I_G \times K0M \times Z_R - V_A$ and $I_A \times Z_R + I_0 \times K0 \times Z_R + I_G \times K0M \times Z_R$
- B ground element — $I_B \times Z_R + I_0 \times K0 \times Z_R + I_G \times K0M \times Z_R - V_B$ and $I_B \times Z_R + I_0 \times K0 \times Z_R + I_G \times K0M \times Z_R$
- C ground element — $I_C \times Z_R + I_0 \times K0 \times Z_R + I_G \times K0M \times Z_R - V_C$ and $I_C \times Z_R + I_0 \times K0 \times Z_R + I_G \times K0M \times Z_R$

The blinders apply to the Quad characteristic only.

13.2.10 LEFT BLINDER CHARACTERISTIC

The left blinder characteristic is achieved by checking the angle between the following signals:

- AB phase element — $(I_A – I_B) \times Z_L$ - $(V_A – V_B)$_and $(I_A – I_B) \times Z_L$
- BC phase element — $(I_B – I_C) \times Z_R$ - $(V_B – V_C)$_and $(I_B – I_C) \times Z_L$
- CA phase element — $(I_C – I_A) \times Z_R$ - $(V_C – V_A)$_and $(I_C – I_A) \times Z_L$
- A ground element — $I_A \times Z_L$ + I_0 × K0 × Z_L + I_G × K0M × Z_L – V_A and $I_A \times Z_L$ + I_0 × K0 × Z_L + I_G × K0M × Z_L
- B ground element — $I_B \times Z_L$ + I_0 × K0 × Z_L + I_G × K0M × Z_L – V_B and $I_B \times Z_L$ + I_0 × K0 × Z_L + I_G × K0M × Z_L
- C ground element — $I_C \times Z_L$ + I_0 × K0 × Z_L + I_G × K0M × Z_L – V_C and $I_C \times Z_L$ + I_0 × K0 × Z_L + I_G × K0M × Z_L

The blinders apply to the Quad characteristic only.

13.2.11 FAULT-TYPE CHARACTERISTIC

The fault-type supervision applies to ground and phase elements and is achieved as follows.

For ground elements by checking the angle between:

- A ground element — I_0 and I_A_2
- B ground element — I_0 and I_B_2
- C ground element — I_0 and I_C_2

The limit angle of the comparator is not adjustable and equals 50°. The fault-type characteristic is intended to block the ground distance elements during double-line-to-ground faults. The fault-type supervision is suppressed during open pole conditions.

For phase elements, first voltages and then currents are checked to ensure permission to phase distance for any types of faults except SLG faults. First, the SLG fault type is determined by detecting one phase voltage depressed while two others are not by using the following equation.

SLG = (V_A _LOW & NOT VB_LOW & NOT VC_LOW) OR (NOT VA_LOW & VB_LOW & NOT VC_LOW) OR (NOT VA_LOW & NOT VB_LOW & VC_LOW)

where:

- VA_LOW = |V_A + V_0| < 0.98|VBC|/√3
- VB_LOW = |V_B + V_0| < 0.98|VCA|/√3
- VC_LOW = |V_C + V_0| < 0.98|VAB|/√3

Additionally, the multi-phase fault is determined if at least two phase voltages are below 85% of the nominal:

- M-PH = (VA < 0.85pu & VB < 0.85 pu) OR (VB < 0.85pu & VC < 0.85pu) OR (VC < 0.85 pu & VA < 0.85 pu)

Permission is always granted to phase distance by setting FLGAB, FLGBC, and FLGCA flags to logic '1,' unless the following condition is satisfied:

- PKP_I0 & PKP_I2 & SLG & NOT M-PH

meaning that if there are negative- and zero-sequence currents present in the fault signal, voltage signatures indicate the presence of the SLG fault and not a multi-phase fault. If at least one of these conditions is not satisfied, permission continues to be granted to all phase distance loops.

But in case this condition is satisfied, angles between I_0 and I_2 are additionally checked to still grant permission to the phase distance loops, shown as follows for the ABC rotation:

- If | ang(I_0) - ang(I_2) + 120° | < 70°, then FLGAB = 1
- If | ang(I_0) - ang(I_2)+240° | < 70°, then FLGCA = 1
- If | ang(I_0) - ang(I_2) | < 70°, then FLGBC = 1

Phase distance fault type supervision is suppressed during open pole conditions and for delta connected VTs. Phase distance fault type supervision can be enabled/disabled through:

- SETTINGS > GROUPED ELEMENTS > SETTING GROUP 1(6) > DISTANCE > PH DIST PH SELECT SUPV

and is applied to phase distance zone 1 to zone 3 only.

> *Note:*
> *G60 and L60 relays do not employ fault type supervision for the phase distance in all zones.*

13.2.12 ZERO-SEQUENCE DIRECTIONAL CHARACTERISTIC

The extra zero-sequence characteristic applies to ground zones 2 and higher and is achieved by checking angles between:

- A, B and C ground elements — I_0 × Z_D and-V_0

The limit angle of the comparator is not adjustable and equals 90°. The zero-sequence directional characteristic improves directional integrity for time-delayed operations after the memory expires.

13.2.13 OVERCURRENT SUPERVISION

The overcurrent supervision responds to the following currents:

- AB phase element — $(I_A – I_B) / \sqrt{3}$
- BC phase element — $(I_B – I_C) / \sqrt{3}$
- CA phase element — $(I_C – I_A) / \sqrt{3}$
- A, B, C ground elements — | 3 × I_0 – 0.05 × I_1 |× Z_R

The following tables summarize the characteristics of the distance elements:

Directional mho phase distance functions

Characteristic	Comparator inputs		Limit angle
Variable mho	I × Z – V	V_1M	COMP LIMIT
Reactance	I × Z – V	I × Z	COMP LIMIT
Directional	I × Z_D	V_1M	DIR COMP LIMIT
Fault type	NOT SLG	See the Fault Type Characteristic section	Removed during open pole conditions

Directional mho ground distance functions

Characteristic	Comparator inputs		Limit angle
Variable mho	I × Z – V	V_1M	COMP LIMIT
Reactance	I × Z – V	I_0 × Z	COMP LIMIT
Directional	I_0 × Z_D	V_1M	DIR COMP LIMIT

Characteristic	Comparator inputs		Limit angle
Directional	I_2 × Z_D	V_1M	DIR COMP LIMIT (removed when 3I_0 > OC SUPV and I_2 < CUTOFF)
Fault-type	I_0	I_2	50° (removed during open pole conditions or when 3I_0 > OC SUPV and I_2 < CUTOFF)
Zero-sequence	I_0 × Z_D	–V_0	90° (zones 2 and higher only; removed for zones 2 and higher during open pole conditions)

Directional quadrilateral phase distance functions

Characteristic	Comparator inputs		Limit angle
Reactance	I × Z – V	I × Z	COMP LIMIT
Directional	I × Z_D	V_1M	DIR COMP LIMIT
Right Blinder	I × Z_R – V	I × Z_R	90°
Left Blinder	I × Z_L – V	I × Z_L	90°
Fault type	NOT SLG	See the Fault Type Characteristic section	Removed during open pole conditions

Directional quadrilateral ground distance functions

Characteristic	Comparator inputs		Limit angle
Reactance	I × Z – V	j × I_0 × e^{jq} or j × I_2 × e^{jq}	COMP LIMIT
Directional	I_0 × ZD	V_1M	DIR COMP LIMIT
Directional	I_2 × ZD	V_1M	DIR COMP LIMIT (removed when 3I_0 > OC SUPV and I_2 < CUTOFF)
Right Blinder	I × ZR – V	I × ZR	90°
Left Blinder	I × ZL – V	I × ZL	90°
Fault-type	I_0	I_2	50° (removed during open pole conditions or when 3I_0 > OC SUPV and I_2 < CUTOFF)
Zero-sequence	I_0 × ZD	–V_0	90° (zones and higher only; removed for zones 2 and higher during open pole conditions)

Non-directional mho phase distance functions

Characteristic	Comparator inputs		Limit angle
Offset mho	I × Z – V	V-I × ZREV	COMP LIMIT
Fault type	NOT SLG	See the Fault Type Characteristic section	Removed during open pole conditions

Non-directional mho ground distance functions

Characteristic	Comparator inputs		Limit angle
Offset mho	I × Z – V	V-I × Z_{REV}	COMP LIMIT
Fault type	I_0	I_2	50°

Non-directional quadrilateral phase distance functions

Characteristic	Comparator inputs		Limit angle
Forward Reactance	I × Z – V	I × Z	COMP LIMIT

Characteristic	Comparator inputs		Limit angle
Reverse Reactance	$I \times Z_{REV} - V$	$I \times Z_{REV}$	COMP LIMIT
Right Blinder	$I \times Z_R - V$	$I \times Z_R$	90°
Left Blinder	$I \times Z_L - V$	$I \times Z_L$	90°
Fault-type	NOT SLG	See the Fault Type Characteristic section	Removed during open pole conditions

Non-directional quadrilateral ground distance functions

Characteristic	Comparator inputs		Limit angle
Forward Reactance	I × Z – V	$j \times I_0 \times e^{jq}$ or $j \times I_2 \times e^{jq}$	COMP LIMIT
Reverse Reactance	$I \times Z_{REV} - V$	$-j \times I_0 \times e^{jq}$ or $-j \times I_2 \times e^{jq}$	COMP LIMIT
Right Blinder	$I \times Z_R - V$	$I \times Z_R$	90°
Left Blinder	$I \times Z_L - V$	$I \times Z_L$	90°
Fault-type	I_0	I_2	50° (removed during open pole conditions or when 3I_0 > OC SUPV and I_2 < CUTOFF)

13.2.14 FAST DISTANCE ALGORITHM

In order to improve operating speed of the phase and ground distance zone 1 and zone 2 elements under CVT transient conditions for high SIRs up to 60, a fast distance algorithm is implemented in the relay. This algorithm uses a weighted average digital filtering technique and runs in parallel with a regular distance algorithm, which uses a fixed digital CVT filtering technique. The fast distance algorithm applies the same comparators as a regular distance algorithm.

The fast distance algorithm is activated upon detection of the system disturbance and is active for three cycles only. The pickup and operate operands of the fast distance elements are internally OR-ed with regular distance elements, to achieve integrated distance element optimal operating speed.

Note:
The Fast Distance algorithm is not active for the following applications:

- Use of the dynamic reach control for series-compensated line applications by selecting a non-zero value for the voltage level setting in the Distance elements
- Non-directional option for the zone 1 and 2 Direction setting
- Phase Distance applications through power transformers, when the XFMR VOL CONNECTION or XFMR CUR CONNECTION setting is other than "None"

13.2.15 MEMORY POLARIZATION

All distance functions use memory polarization. The positive-sequence voltage, either memorized or actual, is used as a polarizing signal. The memory is established when the positive-sequence voltage remains above 80% of its nominal value for five power system cycles. The memory voltage is a two-cycle old voltage.

Once established, the memory is applied for the user-specified time interval. The memory timer is started when the voltage drops below 80% of nominal or when the user-programmable condition is asserted to force memory polarization. After the memory expires, the relay checks the magnitude of the actual positive-sequence voltage. If it is higher than 10% of nominal, the actual voltage is used; if lower, the memory voltage continues to be used.

A provision is added to force self-polarization from any user-programmable condition.

The memory-polarized mho has an extra directional integrity built-in as shown in the figure. The self-polarized mho characteristic is shifted in the reverse direction for a forward fault by an amount proportional to the source impedance, and in the forward direction for a reverse fault.

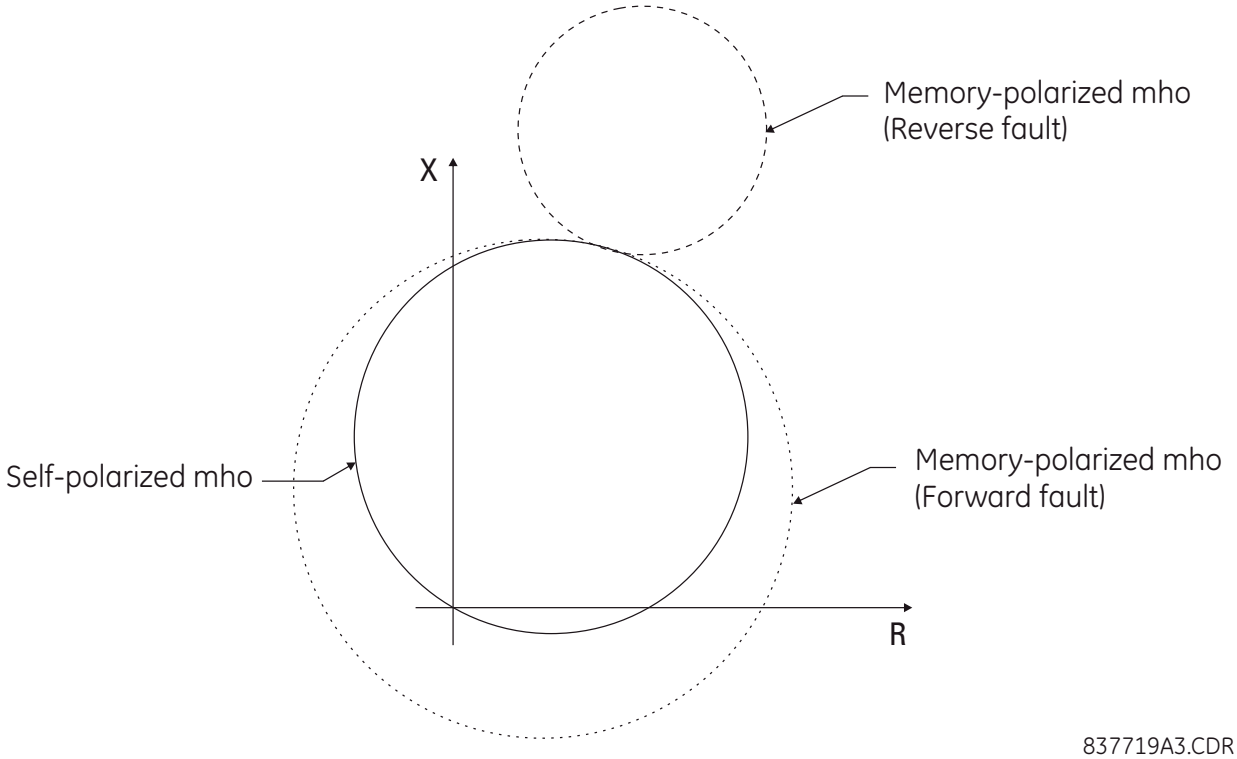

Figure 419: Dynamic shift of the mho characteristic10-12

The same desirable effect of memory polarization applies to the directional comparator of the quadrilateral characteristic.

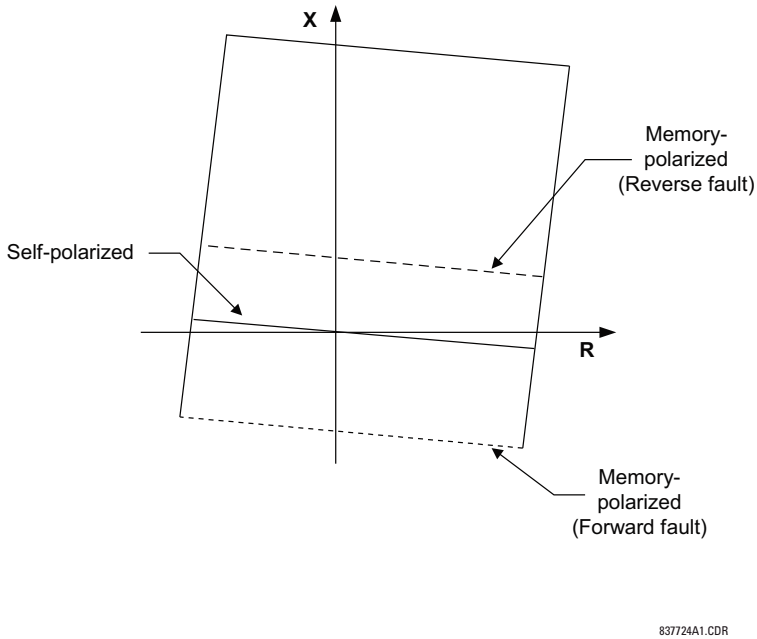

Figure 420: Dynamic shift of the memory-polarized directional characteristic

Mutual zero-sequence compensation can raise concerns regarding directional integrity on reverse faults in the situation when the relay gets "overcompensated." This problem does not affect the relay because its ground distance elements use zero-sequence and negative-sequence currents in extra directional comparators. Both the currents are from the protected line and are not affected by any compensation as the latter applies only to the reach defining comparators: the mho, reactance, and blinder characteristics.

13.2.16 DISTANCE ELEMENTS ANALYSIS

This subsection shows how to analyze the operation of the distance elements in steady states using the results of short circuit studies. All quantities are secondary ohms, volts, and amperes. Ground phase A and phase AB distance elements are analyzed.

13.2.16.1 ASSUMPTIONS

Assume that the following settings have been entered:

- Phase Rotation: ABC
- Right Blinder Reach: 10 Ω
- Nominal Secondary Voltage: 69.28 V
- Right Blinder RCA: 88°
- Distance Reach: 14 Ω
- Left Blinder Reach: 5 Ω
- Distance RCA: 88°
- Left Blinder RCA: 88°
- Polarizing Current: Zero-sequence
- Non-Homogeneity Correction Angle: 3°
- Directional RCA: 88°
- Z0/Z1 Magnitude: 4.55
- Overcurrent supervision: 3 A
- Z0/Z1 Angle: –12°
- Distance Comparator limit angle: 75°
- Z0M/Z1 Magnitude: 0
- Directional Comparator limit angle: 75°

Assume that the following signals are injected to the relay:

- VA = 64.71 V ∠0.0° (pre-fault)
- VA = 25.43 V ∠-19.9°
- VB = 80.22 V ∠-33.5°
- VC = 77.33 V ∠135.7°
- IA = 4.47 A ∠-07.8°
- IB = 2.92 A ∠68.9°
- IC = 2.93 A ∠-51.1°

Based on the entered setting the relay calculates:

- K0 = 3.58 ∠-15.2°
- K0M = 0
- Z = 14.00 Ω ∠88°
- ZD = 1 Ω ∠88°
- ZR = 9.99 Ω ∠-2°
- ZL = 4.99 Ω ∠178°

For the assumed steady-state injection the relay calculates:

- VA_1 = 58.83 V ∠-2.1°
- VA_1M = 64.71 V ∠0.0°
- I_0 = 1.37 A ∠-68.2°
- IA_2 = 1.37 A ∠-68.1°
- –V_0 = 29.18 V ∠8.4°
- (VA–VB)_1 = 93.35 V ∠32.0°
- (VA–VB)_1M = 112.08 V ∠30.0°
- IA–IB = 7.39 A ∠-109.1°

13.2.16.2 MHO PHASE A TO GROUND ELEMENT (BEFORE MEMORY EXPIRES)

- IA × Z + I_0 × K0 × Z + IA × K0M × Z – VA = 103.33 V ∠-3.9°
- VA_1M = 64.71 V ∠0.0°
- IA_2 × ZD = 1.37 V ∠19.8°
- I_0 × Z = 19.11 V ∠19.8°
- I_0 × ZD = 1.37 V ∠19.8°
  - Overcurrent supervision: | 3 × I_0 | = 4.09 A > 3 A
  - Mho difference angle = | –3.9° – 0° | = 3.9° < 75°
  - Reactance difference angle = | –3.9° – 19.8° | = 23.7° < 75°
  - Zero-sequence directional difference angle = | 19.8° – 0.0° | = 19.8° < 75°
  - Negative-sequence directional difference angle = | 19.8° – 0.0° | = 19.8° < 75°
  - Fault-type comparator difference angle = | 19.8° – 19.8° | = 0.0° < 50°

All four comparators and the overcurrent supervision are satisfied, so the MHO phase A ground element operates for this fault.

13.2.16.3 MHO PHASE A TO GROUND ELEMENT AFTER MEMORY EXPIRES)

After the memory expires, the relay checks the actual positive-sequence voltage and compares it with 10% of the nominal voltage:

- | VA_1 | = 58.83 V > 0.1 × 69.28 V

After the memory expires the relay uses the actual voltage for polarization.

- IA × Z + I_0 × K0 × Z + IG × K0M × Z – VA = 103.33 V ∠-3.9°
- VA_1 = 58.83 V ∠-2.1°
- IA_2 × ZD = 1.37 V ∠19.8°
- I_0 × Z = 19.11 V ∠19.8°
- I_0 × ZD = 1.37 V ∠19.8°
  - Overcurrent supervision = | 3 × I_0 | = 4.09 A > 3 A
  - Mho difference angle = | –3.9° – (–2.1°) | = 1.8° < 75°
  - Reactance difference angle = | –3.9° – 19.8° | = 23.7° < 75°
  - Zero-sequence directional difference angle = | 19.8° – (–2.1°) | = 21.9° < 75°
  - Negative-sequence directional difference angle = | 19.8° – (–2.1°) | = 21.9° < 75°
  - Fault-type comparator difference angle = | 19.8° – 19.8° | = 0.0° < 50°

All four comparators and the overcurrent supervision are satisfied, so the Zone 1 MHO phase A ground element operates for this fault.

Zero-sequence directional difference angle for zones 2 and higher (phase A) = | 19.8° – 8.4° | = 11.4° < 90°

Zones 2 and higher phase A ground elements pick-up, time-out, and operate.

13.2.16.4 MHO AB PHASEELEMENT

- (IA – IB) × Z – (VA – VB) = 88.65 V ∠-78.7°
- (VA – VB)_1M = 112.08 V ∠30.0°
- (IA – IB) × Z = 103.50 V ∠-21.2°
- (IA – IB) × ZD = 7.39 V ∠-21.2°
  - Overcurrent supervision: | (IA – IB) / | = 4.27 A > 3 A
  - Mho difference angle = | –78.7° – 30.0° | = 108.7° > 75°
  - Reactance difference angle = | –78.7° – (–21.2°) | = 57.5° < 75°
  - Directional difference angle = | –21.2° – 30.0° | = 51.2° < 75°

The mho comparator is not satisfied, so the MHO AB phase element does not operate for this fault. Repeating this analysis, one concludes that out of the six distance elements only the ground element in phase A operates for this fault.

13.2.16.5 QUAD PHASE A TO GROUND ELEMENT (BEFORE MEMORY EXPIRES)

- IA × Z + I_0 × K0 × Z + IG × K0M × Z – VA = 103.33 V ∠-3.9°
- VA_1M = 64.71 V ∠0.0°
- j × I_0 × ej3 = 1.37 A ∠24.8°
- IA_2 × ZD = 1.37 V ∠19.8°
- I_0 × ZD = 1.37 V ∠19.8°
- IA × ZR + I_0 × K0 × ZR + IG × K0M × ZR – VA = 87.6 V ∠-109.2°
- IA × ZR + I_0 × K0 × ZR = 91.5 V ∠-93.0°
- IA × ZL + I_0 × K0 × ZL + IG × K0M × ZL– VA = 57.0 V ∠108.7°
- IA × ZL + I_0 × K0 × ZL = 45.8 V ∠82.9°
  - Overcurrent supervision: | 3 × I_0 | = 4.09 A > 3 A
  - Reactance difference angle = | –3.9° – 24.8° | = 28.7° < 75°
  - Zero-sequence difference angle = | –19.8° – 0.0° | = 19.8° < 75°
  - Negative-sequence directional difference angle = | –19.8° – 0.0° | = 19.8° < 75°
  - Right blinder difference angle = | –93.0° – (–109.2°) | = 16.2° < 90°
  - Left blinder difference angle = | 82.9° – 108.7° | = 25.8° < 90°
  - Fault-type comparator difference angle = | 19.8° – 19.8° | = 0.0° < 50°

All six comparators and the overcurrent supervision are satisfied, so the Quad Phase A ground element operates for this fault.

13.3 CROSS-COUNTRY FAULTS

13.3.1 CROSS-COUNTRY FAULT PROTECTION FOR SOLIDLY GROUNDED SYSTEMS

Cross-country fault means that two separate single-phase faults occur on a system together. For example, where singlepole tripping is employed, if a single-phase to ground fault occurs, the voltages on the other phases can rise above normal. This can cause a breakdown elsewhere on the system and result in another fault involving a different phase than the one on which the original fault occurred. The distance protection provides cross-country detection logic. The logic is dedicated to provide cross-country fault protection for solidly grounded systems. It ensures correct operation for a fault in Zone 1 that can evolve to involve a different phase. For isolated or compensated ground systems, a settable phase preferential logic is used for cross-country faults instead. Cross-country logic does the following:

- Prevents possible false three-pole operation whilst allowing the appropriate pole to trip
- Acts when the distance protection makes a multiple phase selection (where more than one phase is involved in the fault), but only one Zone 1 phase-ground element picks up. Only "on-angle" operation of the Zone 1 phase-ground element can activate the logic. This prevents incorrect operation due to impedance encroachment.
- Does not apply if more than one forward Zone 1 element picks up. In this case, the fault is considered multiphase and the protection trips three-pole.

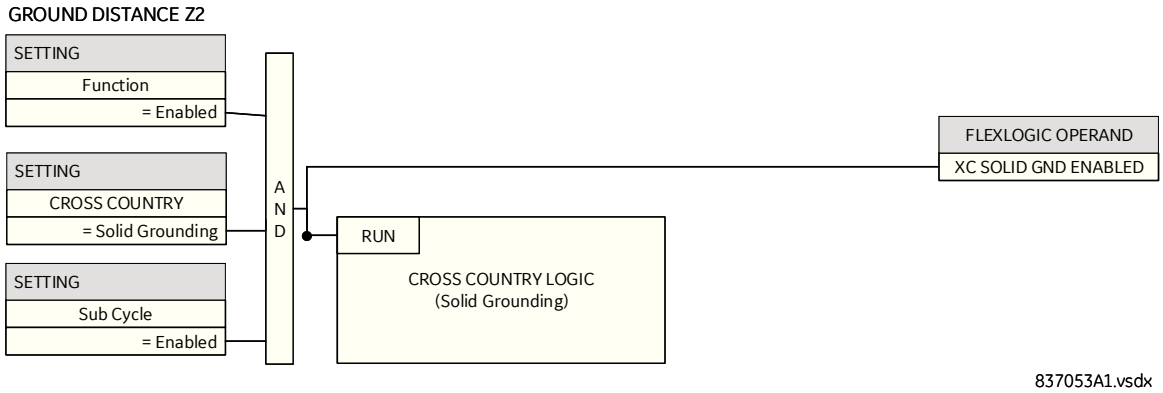

Figure 421: Cross-country solid grounding logic

13.3.2 GROUND FAULT DISTANCE PROTECTION FOR ISOLATED AND COMPENSATED SYSTEMS

There are four types of faults to consider when providing distance protection for isolated or Petersen coil compensation grounded systems, as follows:

- Single-phase to ground faults
- Faults involving three phases
- Phase-to-phase faults
- Cross-country faults involving separate single-phase to ground faults

Faults involving three phases and phase-to-phase faults do not require special attention. Tripping is in accordance with zone impedance limits, fault direction, and zone time delay.

Faults on isolated or compensated grounded systems involving single-phase to ground or cross-country faults do require special attention.

13.3.2.1 SINGLE-PHASE TO GROUND FAULTS

On isolated or compensated grounded systems, a single-phase to ground fault does not lead to a short circuit because only a small capacitive or compensated current flows to ground. In most cases, the ground fault self-extinguishes. In the remaining cases, the system can continue to operate with the ground fault present, until the fault is located and removed by isolating the faulted feeder. Indication of the ground fault can be provided by Wattmetric function or a Transient Ground Fault Detection (TGFD) function.

For a fault on a solidly grounded network, distance protection is required to trip as quickly as possible to isolate the fault. This is for all fault types, including a single-phase to ground fault. In isolated or compensation-grounded systems, a singlephase to ground fault needs to be correctly identified for network control, but instantaneous tripping is not required because the system can be (at least for a certain period of time) remain connected — as the magnitude of the fault current is not very high — and/or the fault in most cases self-extinguishes.

Moreover, for a solid ground fault, the voltage on the faulted phase can be 0 V across the entire galvanically connected network. Using a collapsed voltage in conjunction with the load current gives measured impedance values on the faulted phase of 0 Ω across the network, causing incorrect and uncontrolled tripping.

Since distance protection should not operate for a single-phase to ground fault, pick up of fault detection elements under single-phase to ground fault conditions must not lead to tripping. This can be a problem on large isolated networks, where capacitance to ground is large. When a single-phase to ground fault occurs, the voltages on the unfaulted phases increase relative to ground, and so do associated capacitive ground currents. During the initial half-cycle after fault inception, the arc-ignition ground current amplitude of the disturbance can be much higher than nominal current, with a frequency close to the nominal system frequency. To prevent incorrect detection during single-phase to ground faults, it is common practice to delay single-phase to ground fault detection on isolated or compensation-grounded systems using a short delay. This delay is bypassed if the fault evolves into a double ground fault.

13.3.3 CROSS-COUNTRY FAULTS ON ISOLATED OR COMPENSATED SYSTEMS

While a single-phase to ground fault is present on an isolated or compensation grounded system, the phase to ground voltage on the healthy phases rises by a factor of . Due to this rise, double ground faults (or cross-country faults) can result. The double ground fault is similar to a two-phase fault; however, for the double ground faults, the fault path is from one ground fault location to another, via ground. The second fault can be anywhere on the system, depending on where the weakest point in the insulation is located.

The likelihood of a double ground fault increases as the size of the network increases. The protection strategy usually applied for cross-country faults is to isolate one of the fault locations, with the expectation that the second fault location then self-extinguishes similar to a single-phase to ground fault. The faulted line can then be tripped manually once the fault location has been identified. Distance protection applied to isolated systems must have a so-called double ground fault phase preference, which selects a predefined phase ground loop for measurement across the entire galvanically connected network.

In the case of cross-country faults, measurements from the phase-to-phase loops between the two fault locations do not produce useful results because the phase currents belong to different short circuit loops. For the second fault, ground loops measure the fault impedance more accurately. For a cross-country fault, all devices across the network are set to follow either a so-called "cyclic" logic or "acyclic" logic to select a phase preference for the impedance measurement. This is used to determine which part of the system to isolate by three-phase tripping. Tripping allows the rest of the network to continue to operate (single ground fault present, but supply maintained). Then, when the single-phase ground fault has been located, the faulted section can be tripped manually.

The most commonly used phase preference logic is C(A) acyclic (that is C before A before B), but other preferences can be used.

When applying distance protection to compensated or isolated systems, remember the following points:

- Distance protection must not trip for a single-phase to ground fault
- For cross-country faults, the protection methods differ from that of solidly grounded systems. Use either cyclic or acyclic logic to select a preferred phase for the impedance measurement.

13.3.4 FIRST GROUND FAULT DETECTION

In isolated or compensated grounding mode, no trip is to occur for a ground fault. Ground fault detection by means of impedance criteria leads to false information because voltages around the galvanic network are 0 V for the faulty phase. Instead, a ground fault is detected by comparing IN and/or VN with a settable threshold.

For this detection, choose to use VN only, IN only, VN or IN, or VN and IN as your selection criteria.

13.3.4.1 NEUTRAL VOLTAGE CRITERIA

The influence of ground current in a fault can be determined by considering the changes in phase-to-phase and neutral displacement voltages. During ground faults, a significant displacement of the neutral voltage is expected, whilst no imbalance of the voltage triangle is to be expected. The right side of the figure shows a Phase A to ground fault.

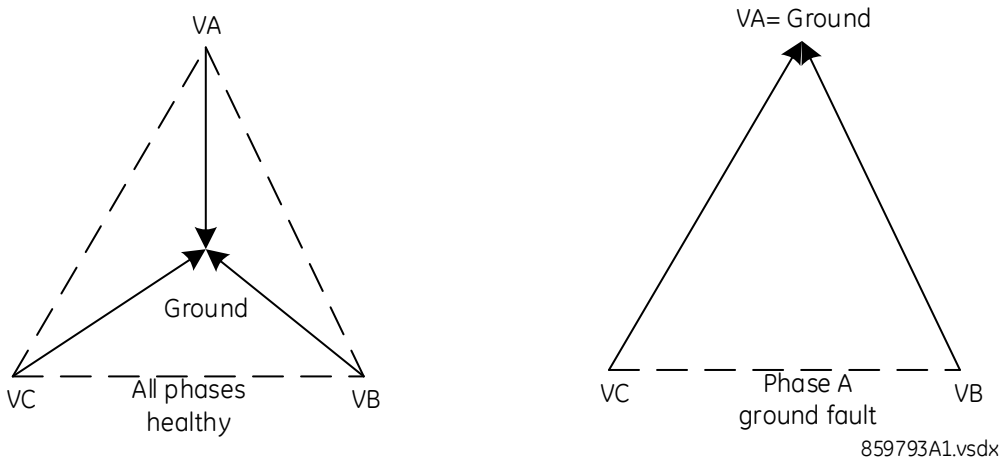

Figure 422: Voltage distribution in isolated system for Phase A to ground fault

Therefore, we can establish a ground fault by seeing if the neutral voltage VN exceeds a settable threshold ***VN Voltage Pickup*** and checking whether the phase-phase voltages are still balanced.

0.8(max. Vph-ph) < (min. Vph-ph) Neutral displacement is established by comparing the neutral voltage VN with a threshold set by the setting, ***VN Voltage Pickup***.

13.3.4.2 NEUTRAL CURRENT CRITERIA

The bias neutral level detector (LDBN) is used to improve stability and is complemented with an additional minimum threshold controlled by setting ***IN Current Pickup***. A negative sequence current check also is performed for long and heavily loaded lines.

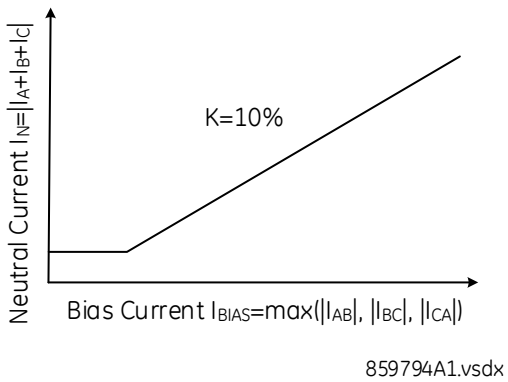

Figure 423: Neutral current criteria

13.3.4.3 FIRST GROUND FAULT DETECTION LOGIC

Detection of the first fault primes the detection of a second ground fault and blocks tripping of phase-to-phase elements. It also triggers a FlexLogic operand that indicates a single-phase ground fault (***XC IS/Comp GF***). An additional zone with Zone 2 information is used to detect if a second ground loop converges into the impedance characteristic.

The ***VN> Start*** signal is established by comparing the neutral voltage VN with a threshold set by the setting ***VN Voltage Pickup***. This signal is gated with another signal that indicates whether the phase voltage triangle is balanced or not and then fed into the mode selector. If the voltage triangle is balanced and there is an overvoltage condition, then a single-phase fault is indicated.

The mode selector decides whether the single-phase to ground fault is determined by VN only, IN only, VN or IN, or VN and IN. The single-phase to ground fault signal (***XC IS/Comp GF***) then is produced after a time delay set by ***1P Time Delay***.

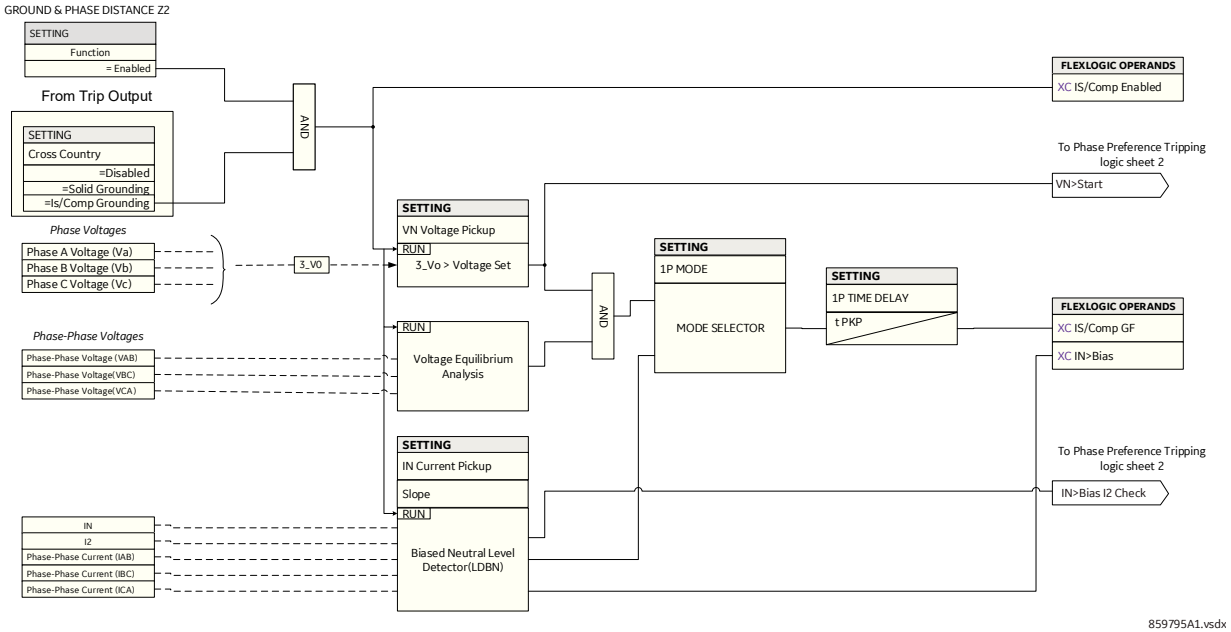

Figure 424: First ground fault detection logic

13.3.5 SECOND GROUND FAULT DETECTION LOGIC

It is unlikely for a second fault to occur on the same phase because the phase to neutral voltage on this phase has collapsed to zero as a result of the first fault. However, a second fault is highly likely in one of the other phases as the voltage has increased by a factor of and the extra voltage puts more stress on the insulation, increasing the likelihood of a fault farther down the line.

A second ground fault (on a different phase) causes an imbalance in the voltage triangle. This is used as part of the second fault detection process. The criteria for the detection of a second fault is as follows:

- A second ground fault is confirmed if a first ground fault has been detected AND the phase to phase voltage triangle is unbalanced AND the neutral voltage has exceeded the set threshold AND the neutral current has exceeded the levelset by the threshold together with the bias neutral level detector (LDBN)
- A second fault is detected if additionally there is a neutral overvoltage, imbalance in the voltage triangle (phase undervoltage) and there is enough neutral overcurrent (a minimum of 50 mA for correct device operation).

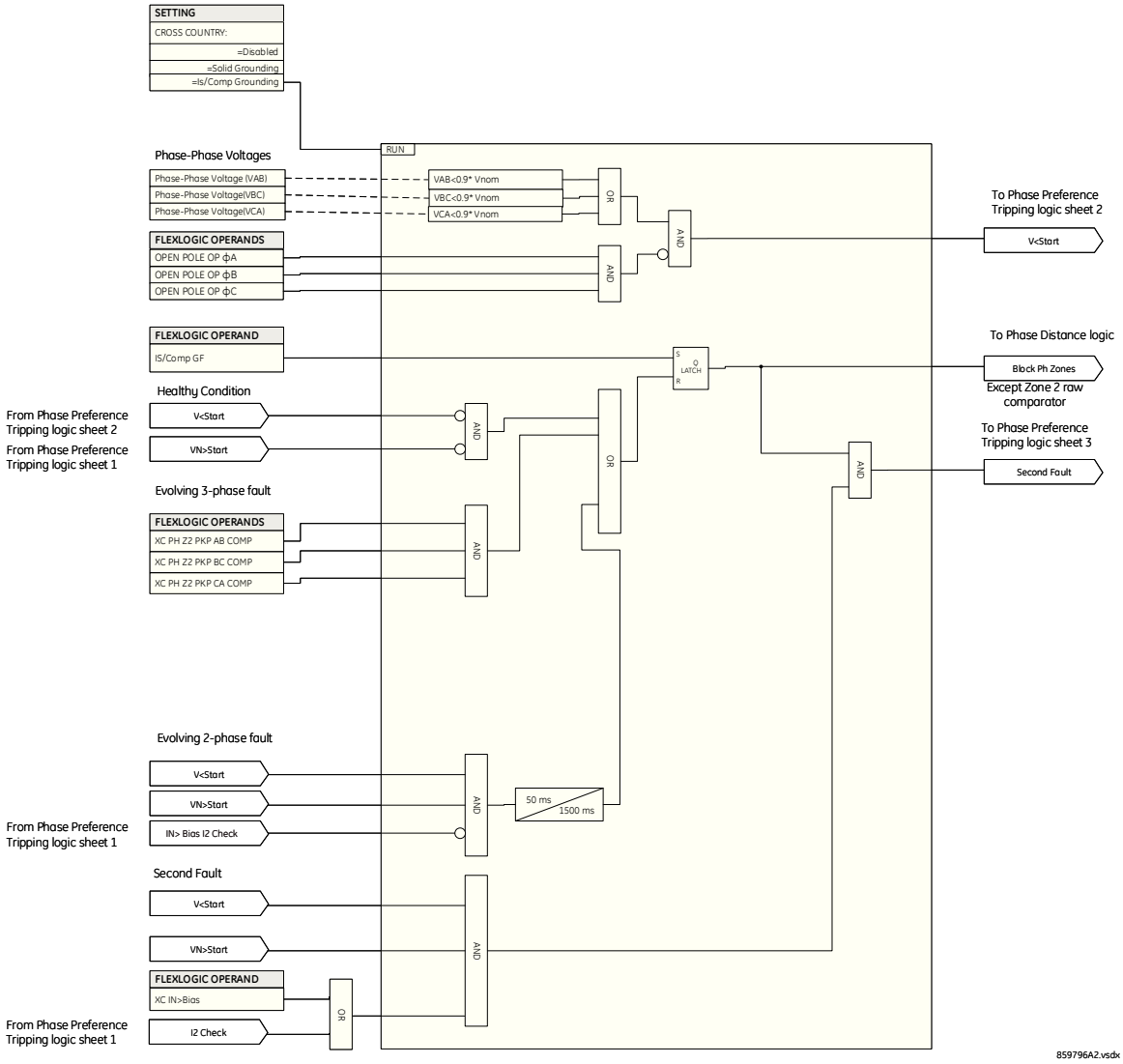

Figure 425: Second ground fault detection logic

13.3.6 PHASE PREFERENCE TRIPPING LOGIC

With double ground faults (cross-country faults), the aim is to isolate one of the fault locations and expect that the fault at the other location self-extinguishes or that it is tripped manually after successful detection. To achieve this for isolated or compensated systems, the distance protection with new additional comparators (shown in the Ground Distance Logic diagram at the end of the next section) must have a preference as to which phase-to-ground loop to measure.

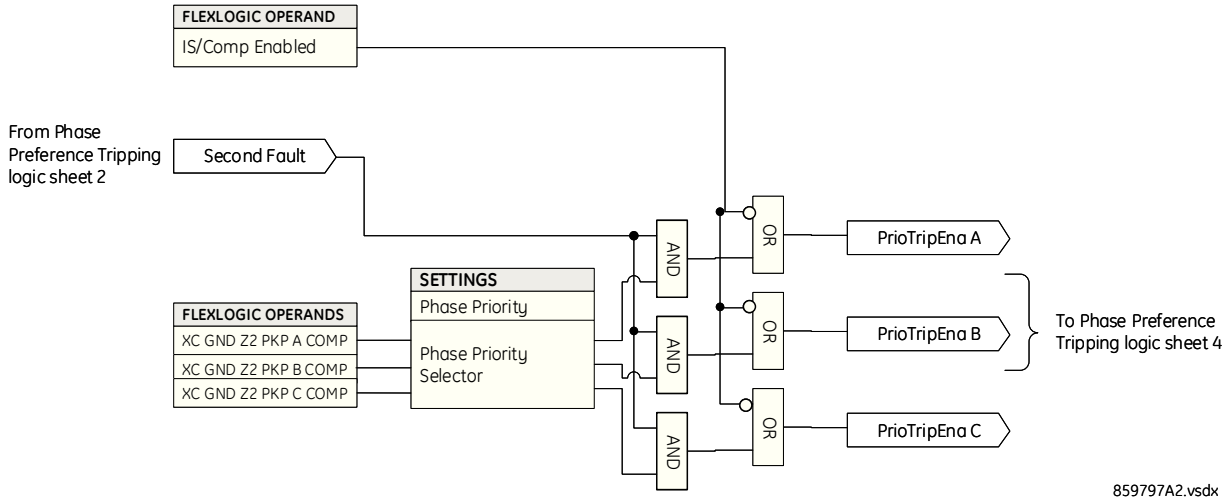

Figure 426: Priority setting enable logic

13.3.7 ZONE STARTING LOGIC

The logic shows one zone logic. The logic for all other zones follow the same principles.

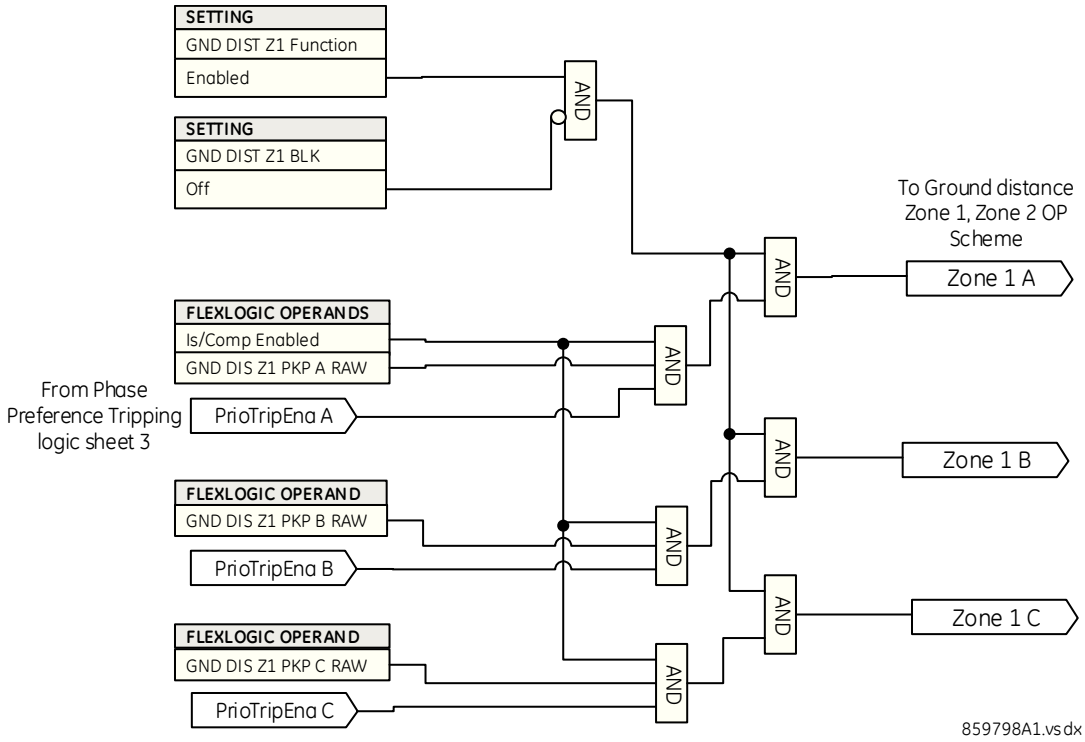

Figure 427: Zone starting logic

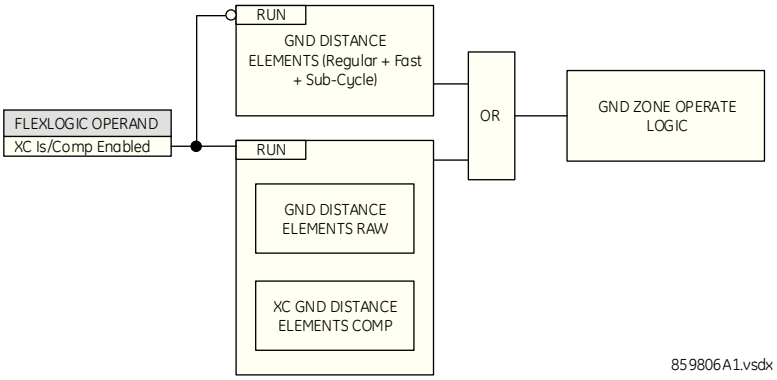

Figure 428: Ground distance logic

13.4 PHASE DISTANCE APPLIED TO POWER TRANSFORMERS

As a Wye-Delta transformer introduces discontinuity for the zero-sequence circuit, the ground distance protection cannot be applied, except special circumstances, to respond to faults behind the transformer.

The phase distance elements, however, can be developed so that both accurate reach and correct fault phase identification is retained for faults behind the power transformer as seen from the relaying point. Without appropriate compensation, the reach of the relay depends on a type of fault, creating considerable difficulties in applying the relay.

The relay provides for any location of the VTs and CTs with respect to the involved power transformer and the direction of any given zone.

In the following equations, the VT and CT locations are referenced as “None” if the transformer is not present between the CT/VT and the intended reach point. Otherwise, the location is to be selected as a type of a transformer as seen from the VT/CT position towards the intended reach point. The following figure explains the adopted rules.

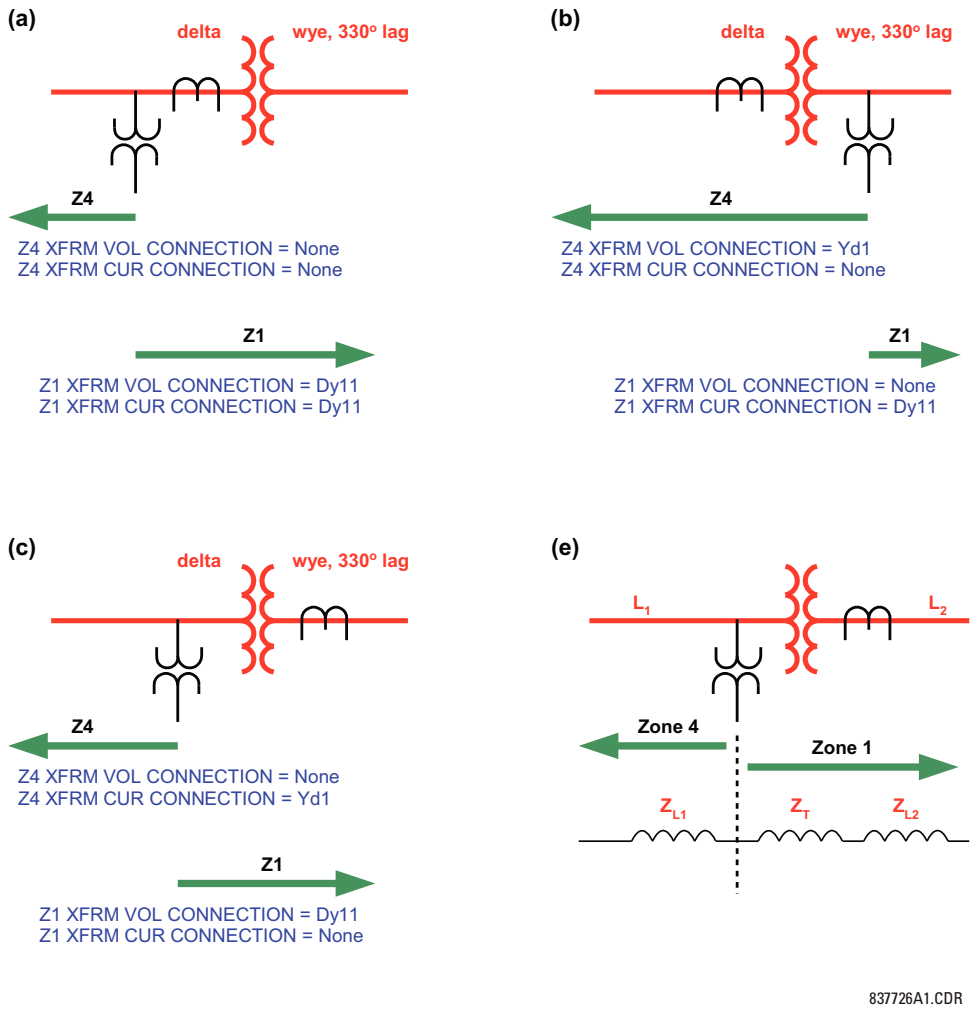

Figure 429: Applications of the *PHS DIST XF MR VOL/CUR CONNECTION* settings

Phase distance input signals for delta-wye transformers

Transformer connection	Loop	Current transformation	Voltage transformation
None	AB	IA - IB	VAB
	BC	IB - IC	VBC
	CA	IC - IA	VCA
Dy1	AB	√3IA	(VAB – VCA) / √3
	BC	√3IB	(VBC – VAB) / √3
	CA	√3IC	(VCA – VBC) / √3
Dy3	AB	I_{AB_21P} = -√3IC	V_{AB_21P} = (VBC – VCA) / √3
	BC	I_{BC_21P} = -√3IA	V_{BC_21P} = (VCA – VAB) / √3
	CA	I_{CA_21P} = -√3IB	V_{CA_21P} = (VAB – VBC) / √3
Dy5	AB	I_{AB_21P} = √3IB	V_{AB_21P} = (VBC – VAB) / √3
	BC	I_{BC_21P} = √3IC	V_{BC_21P} = (VCA – VBC) / √3
	CA	I_{CA_21P} = √3IA	V_{CA_21P} = (VAB – VCA) / √3
Dy7	AB	I_{AB_21P} = -√3IA	V_{AB_21P} = (VCA – VAB) / √3
	BC	I_{BC_21P} = -√3IB	V_{BC_21P} = (VAB – VBC) / √3
	CA	I_{CA_21P} = -√3IC	V_{CA_21P} = (VBC – VCA) / √3
Dy9	AB	I_{AB_21P} = √3IC	V_{AB_21P} = (VCA – VBC) / √3
	BC	I_{BC_21P} = √3IA	V_{BC_21P} = (VAB – VCA) / √3
	CA	I_{CA_21P} = √3IB	V_{CA_21P} = (VBC – VAB) / √3
Dy11	AB	I_{AB_21P} = √3IB	V_{AB_21P} = (VAB – BVC) / √3
	BC	I_{BC_21P} = √3IC	V_{BC_21P} = (VBC – VCA) / √3
	CA	I_{CA_21P} = √3IA	V_{CA_21P} = (VCA – VAB) / √3

Phase distance input signals for wye-delta transformers

Transformer connection	Loop	Current transformation	Voltage transformation
Yd1	AB	I_{AB_21P} = (2IA-IB-IC) / √3	V_{AB_21P} = √3VA
	BC	I_{BC_21P} = (2IB-IA-IC) / √3	V_{BC_21P} = √3VB
	CA	I_{CA_21P} = (2IC-IA-IB) / √3	V_{CA_21P} = √3VC
Yd3	AB	I_{AB_21P} = (IA + IB - 2IC) / √3	V_{AB_21P} = -√3VC
	BC	I_{BC_21P} = (IB + IC - 2IA) / √3	V_{BC_21P} = -√3VA
	CA	I_{CA_21P} = (IA + IC - 2IB) / √3	V_{CA_21P} = -√3VB
Yd5	AB	I_{AB_21P} = (2IB - IA - IC) / √3	V_{AB_21P} = √3VB
	BC	I_{BC_21P} = (2IC-IA-IB) / √3	V_{BC_21P} = √3VC
	CA	I_{CA_21P} = (2IA - IB _ IC) / √3	V_{CA_21P} = √3VA
Yd7	AB	I_{AB_21P} = (IB + IC -2IA) / √3	V_{AB_21P} = -√3VA
	BC	I_{BC_21P} = (IA + IC - 2IB) / √3	V_{BC_21P} = -√3VB
	CA	I_{CA_21P} = (IA +IB - 2IC) / √3	V_{CA_21P} = -√3VC

Transformer connection	Loop	Current transformation	Voltage transformation
Yd9	AB	I_{AB_21P} = (2IC-IA-IB) / √3	V_{AB_21P} = √3VC
	BC	I_{BC_21P} = (2IA - IB +-IC) / √3	V_{BC_21P} = √3VA
	CA	I_{CA_21P} = (2IB - IA - IC) / √3	V_{CA_21P} = √3VB
Yd11	AB	I_{AB_21P} = (IA + IC - 2IB) / √3	V_{AB_21P} = -√3VB
	BC	I_{BC_21P} = (IA + IB - 2ICB) / √3	V_{BC_21P} = -√3VC
	CA	I_{CA_21P} = (IB + IC - 2IA) / √3	V_{CA_21P} = -√3VA

Equations from the “Current Transformation” and “Voltage Transformation” columns are used to derive inputs to the three (AB, BC, and CA) phase distance elements. For example, if the CTs are located at the delta side of the Delta-Wye 11 transformer, and a given zone is set to look through the transformer into the system connected to the Wye winding, the CT location setting for that zone is set to Dy11 and the relay uses - √3 instead of a traditional (IA - IB) for the AB phase distance element.

The current supervision pickup setting applies to the currents specified in the “Current Transformation” columns.

A distance zone originates at the location of the VTs (regardless of the location of the CTs). For information on settings, see the Application of Settings chapter.

13.4.1 EXAMPLE

Consider the system shown:

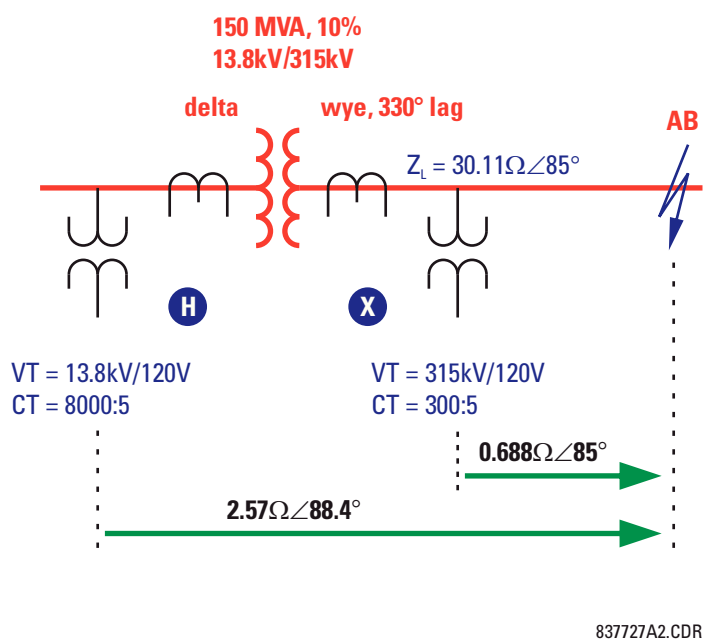

Figure 430: Sample system configuration

Normally, in order to respond to the fault shown in the figure, a distance relay is applied at the relaying point X. The table outlines the relay input signals at this location.

Relay input signals at location X

Input	Primary	Secondary
VA	100.4 kV ∠ –7.32°	38.25 V ∠ –7.32°
VB	97.23 kV ∠ –53.4°	37.04 V ∠ –53.4°

Input	Primary	Secondary
VC	181.8 kV ∠ –150.0°	69.26 V ∠ 150.0°
IA	1.288 kA ∠ –27.6°	21.47 A ∠ –27.6°
IB	1.288 kA ∠ 152.4°	21.47 A ∠ 152.4°
IC	0	0

If installed at the location X, the relay uses the following input signals for its phase AB distance element:

- V = VAB = 77.402 kV ∠57.5° primary or 29.49 V ∠57.5° secondary
- I = IA – IB = 2.576 kA ∠-27.6° primary or 42.93 A ∠-27.6° secondary

And consequently it sees an apparent impedance of:

- Zapp = V / I = 30.05 Ω ∠85° primary or 0.687 Ω ∠85° secondary

If applied at location H, the relay sees the following input signals:

Relay input signals at location H

Input	Primary	Secondary
VA	7.584 kV ∠ –5.59°	69.95 V ∠ –5.59°
VB	6.269 kV ∠ 120.1°	54.52 V ∠ –120.1°
VC	7.751 kV ∠ 125.5°	65.84 V ∠ 125.5°
IA	16.976 kA ∠ –27.6°	10.61 A ∠ –27.6°
IB	33.952 kA ∠ 152.4°	21.22 A ∠ 152.4°
IC	16.976 kA ∠ –27.6°	10.61 A ∠ –27.6°

The relay is set as follows:

XFMR VOL CONNECTION = “Dy11”

XFMR CUR CONNECTION = “Dy11”

Consequently, the following signals are applied to the phase AB distance element:

$$V = \frac{1}{\sqrt{3}} V_{AB} - V_{BC} = 10.861\ \text{kV}\angle 59.9^\circ \text{ primary or } 94.45\ \text{V}\angle 59.9^\circ \text{ secondary}$$

$$I = -\sqrt{3} I_B = 58.860\ \text{kA}\angle -27.6^\circ \text{ primary or } 36.75\ \text{A}\angle -27.6^\circ \text{ secondary}$$

This results in the following apparent impedance:

$$Z_{app} = \frac{V}{I} = \frac{94.45\ \text{kV}\angle 59.9^\circ}{36.75\ \text{kA}\angle -27.6^\circ} = 2.570\ \Omega\angle 87.5^\circ \text{ secondary}$$

This value is a correct measure of the distance from the VT location to the fault. For relay location 2, this certainly includes the positive-sequence impedance of the transformer:

$$Z_T(\text{at } 13.8\ \text{kV}) = \frac{10}{100} \times \frac{(13.8\ \text{kV})^2}{150\ \text{MVA}} = 0.127\Omega\angle 90^\circ$$

$$Z_L(\text{at } 13.8\ \text{kV}) = 30.11 \times \left(\frac{13.8}{315}\right)^2 = 0.05779\Omega\angle 85^\circ$$

Thus, 0.127 Ω ∠90° + 0.05779 Ω ∠85° = 0.1847 Ω ∠88.4° primary side or 2.569 Ω ∠88.4° on the secondary side.

This example illustrates how the relay maintains correct reach for fault behind power transformers. When installed at X, the relay needs to be set to 0.687 Ω ∠85° secondary in order to reach to the fault shown in the figure. When installed at H, the relay needs to be set to 2.569 Ω ∠88.4° to ensure exactly same coverage.

See the Application of Settings chapter for information on setting calculations.

13.5 GROUND DIRECTIONAL OVERCURRENT

Consider the negative-sequence directional overcurrent element. As shown, the negative-sequence voltage can be low during internal fault conditions.

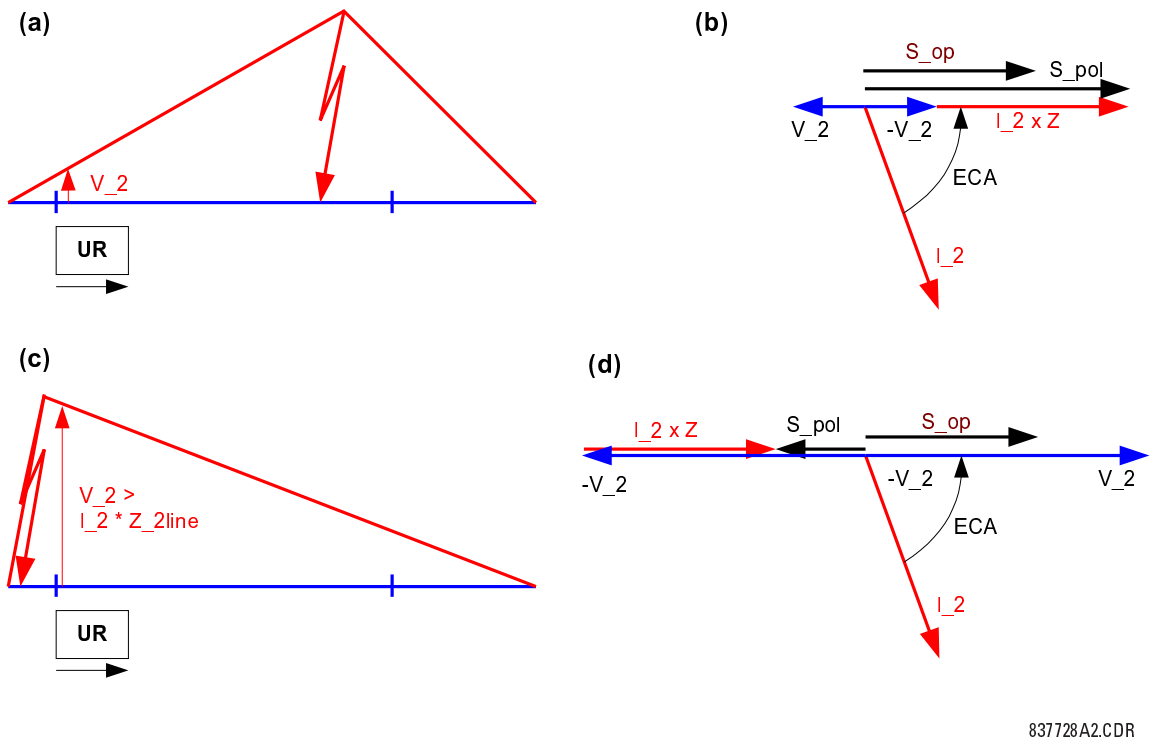

Figure 431: Offset impedance augmentation

To ensure operation of the element under such circumstances, the angle comparator uses a polarizing voltage augmented by the negative-sequence current as per following equations:

Forward-looking element:

$$S_pol = -V_2 + I_2 \times Z_offset \times 1 \angle ECA$$

$$S_op = I_2 \times 1 \angle ECA$$

Reverse-looking element:

$$S_pol = -V_2 + I_2 \times Z_offset \times 1 \angle ECA$$

$$S_op = -I_2 \times 1 \angle ECA$$

where:

- ECA = forward ECA angle (maximum torque angle)
- Z_offset = offset impedance.

The effect of the augmentation for forward and reverse fault is shown in the previous figure. As long as the offset impedance is not higher than the negative-sequence line impedance, the element ensures correct and fast fault direction identification for both forward and reverse faults. The same principle applies to the neutral directional overcurrent element.

13.6 SERIES-COMPENSATED LINES

Faults on or in close vicinity of series-compensated lines can create the following problems for distance protection:

- Voltage and/or current inversion can lead to false direction discrimination by directional elements. This can potentially include both a failure to operate on a forward in-zone fault as well as misoperation on a reverse fault. Both distance and overcurrent directional elements can be affected.
- Series-capacitors and their overvoltage protection equipment (air gaps and/or Metal-Oxide Varistors) have a steady-state overreaching effect on the apparent impedance seen by the relay—a forward fault can appear much closer to the relay as compared with the actual fault location. The apparent impedance can be shifted towards the relay by as much as the total reactance of the series capacitors placed between the potential source of the relay and the fault point. This extreme steady-state overreach happens during low-current faults when the air-gaps do not flashover or the MOVs do not conduct any significant current.
- In addition to the e steady-state overreach effect, sub-synchronous oscillations in both currents and voltages can cause significant transient overreach

Distance protection elements deal with the problem of voltage inversion by using 100% memory polarized directional comparators. As the memory duration is set longer than the slowest fault clearing time for reverse faults, it is guaranteed that the distance element does not pick-up on reverse faults if the voltage inversion happens.

At the same time, it is guaranteed that the distance elements picks up for all forward faults regardless of any voltage inversion as long as the memory voltage is used. Before the memory expires, the relay responds to any fault on the protected line. Stepped distance backup zones operate after the memory voltage expires. But the backup protection responds to distant faults that do not cause any inversion of the positive-sequence voltage. As a result, the time-delayed stepped-distance zones are guaranteed to operate.

Distance protection elements deal with the problem of current inversion by using a multi-input-comparator approach as described in the Distance Characteristics section. If the current inversion happens, the distance elements are secure on reverse faults because multiple conditions involving fault-loop, negative-sequence and zero-sequence currents, and the memory voltage are checked prior to declaring a forward fault.

On close-in forward faults beyond the series capacitors as seen from the relaying point, the current inversion phenomenon can take place for a short period of time. The condition cannot sustain for a long time as very high fault currents would occur, causing large voltage drops across the series capacitors and prompting the overvoltage protection of the capacitors to operate quickly. This effectively removes the series compensation and eliminates the current inversion. However, when the currents used by distance comparator (fault-loop current for ground and phase distance protection, and the negative- and zero-sequence currents for ground elements) stay shifted by more than 90 degrees from their natural fault position determined by the user as the element characteristic angle, the distance elements can fail to pick up on such a forward fault for the brief period of current inversion. This is an inherent attribute of the 100% memory polarized mho element, and not a weakness particular to the relay.

Therefore, for dependability, it is recommended to use high-set phase overcurrent protection for direct tripping on close-in faults potentially causing current inversion, and overreaching ground fault directional overcurrent functions (such as negative-sequence, ground, or neutral) for communication-aided schemes.

The problem of steady-state overreaching due to the negative reactance of the series capacitors can be addressed in a traditional way by shortening the reach of an underreaching distance elements to the net inductive reactance of the line between the potential source and the far end busbar(s). This generic approach has two major drawbacks. First, it leaves large portion of the line uncovered by the directly tripping distance protection. Second, it does not solve the transient overreaching problem caused by sub-synchronous oscillations.

Therefore, the relay offers a unique option for dynamic reach control that is effectively based on the magnitude of the current flowing through the series capacitor bank(s). The underreaching distance functions can be set as for plain uncompensated line, that is, using the impedance of the line alone, and the relay then controls an effective reach accordingly using the current magnitude as illustrated in the following figure.

The reach is reduced sufficiently to cope with both steady-state and transient overreach phenomena. For large degrees of compensation and small-current faults, the transient overreach can be as high as 100%. This means that fast distance protection is not achievable. The adaptive mechanism guarantees security on external faults. Use

overreaching ground fault directional overcurrent functions (such as negative-sequence, ground, or neutral) for dependability.

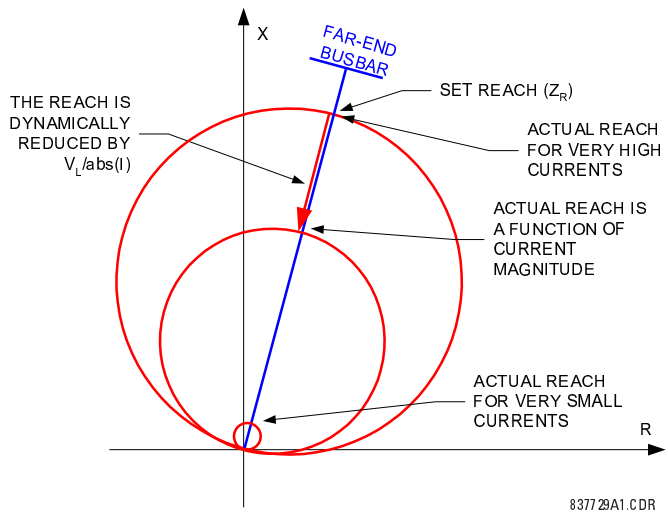

Figure 432: Dynamic reach control

Section (a) of the following figure shows the effect of adaptive reach control for low-current external fault. The reach is reduced sufficiently to cope with both transient and steady-state overreach. Section (b) shows a high-current external fault. The air gaps or MOVs conduct the majority of the fault current and neither steady-state nor transient overreach takes place. The relay does not reduce its reach as it is not necessary. Section (c) shows a high-current internal fault. Because of the large current, the reach is not reduced and the element responds to this internal fault. Traditional approach leaves this fault out of the relay reach.

The neutral and negative-sequence directional protection functions of the relay cope with the voltage and/or current inversions by adding appropriate offset to their polarizing signals as explained in the Ground Directional Overcurrent section. The offset impedance can always be selected successfully to guarantee correct fault direction discrimination regardless of the degree of compensation and location of the series capacitors and the potential source.

See the Application of Settings chapter for recommendations on settings for series compensation applications.

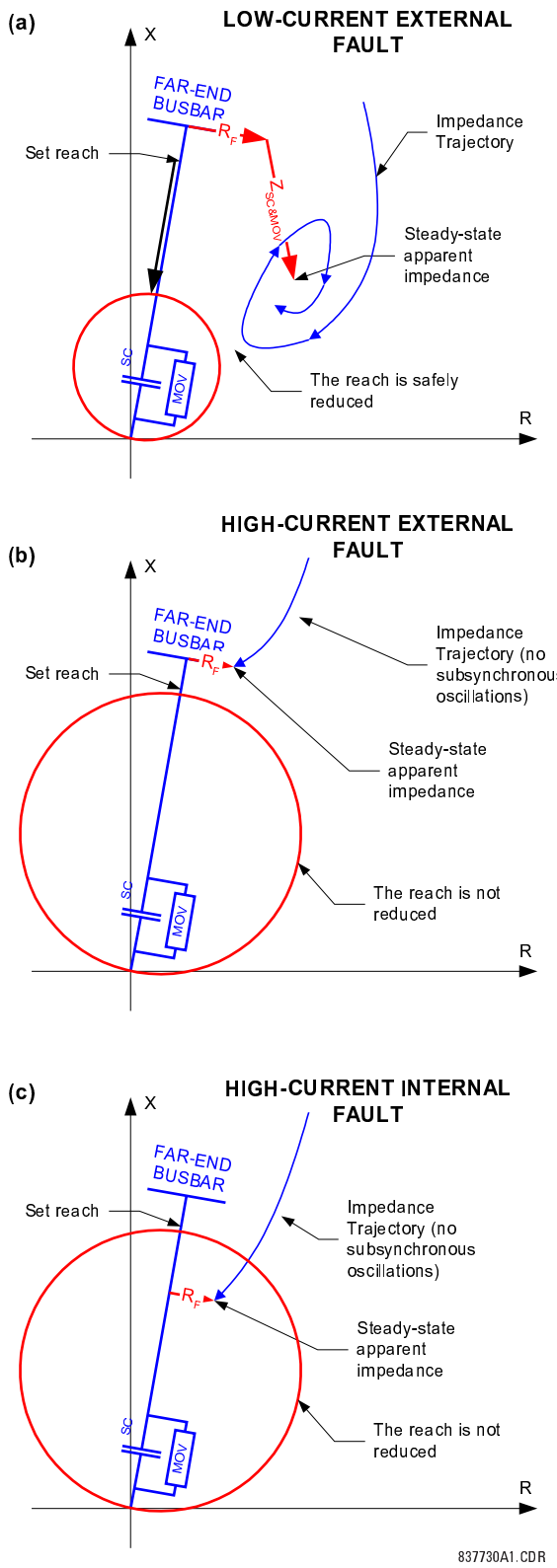

Figure 433: Dynamic reach for internal and external faults

13.7 SINGLE POLE TRIPPING

Single pole operations make use of many features of the relay. At minimum, the trip output, recloser, breaker control, open pole detector, and phase selector must be fully programmed and in service; and either protection elements or digital inputs representing fault detection must be available for successful operation. When single pole trip-and-reclose is required overall control within the relay is performed by the trip output element. This element includes interfaces with pilot-aided schemes, the line pickup, breaker control, and breaker failure elements.

Single pole operations are based on use of the phase selector to identify the type of the fault, to eliminate incorrect fault identification that can be made by distance elements in some circumstances and to provide trip initiation from elements that are not capable of any fault type identification, such as high-set negative-sequence directional overcurrent element. The scheme is also designed to make use of the advantages provided by communications channels with multiple-bit capacities for fault identification.

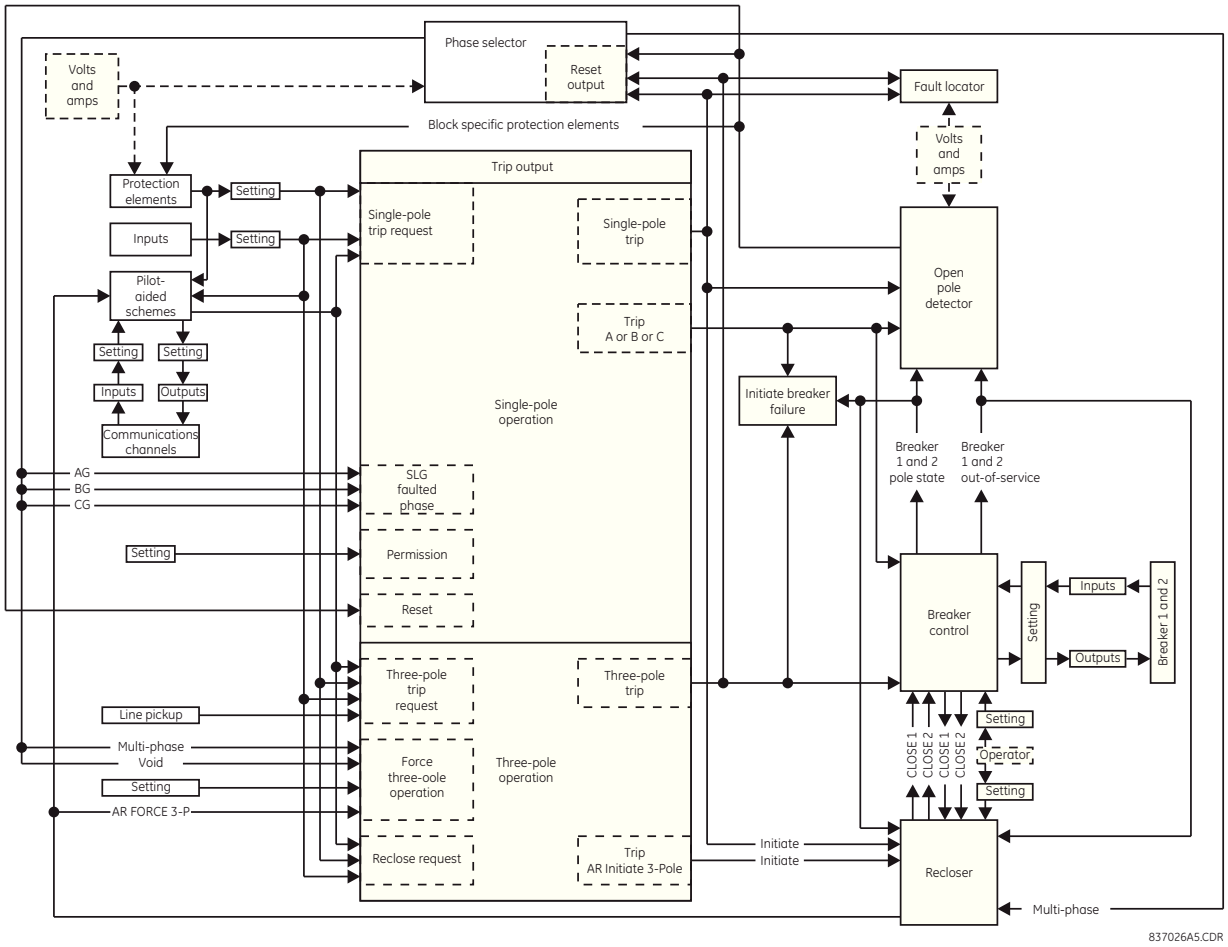

Figure 434: Single-pole operation

The trip output element receives requests for single and three-pole trips and three-pole reclose initiation, which it then processes to generate outputs that are used to:

- Determine whether a single or three-pole operation is to be performed
- Initiate tripping of breaker poles A, B, and C, either individually or as a group
- Initiate breaker failure protection for phases A, B, and C, either individually or as a group
- Notify the open pole detector when a single pole operation is imminent
- Initiate either single or three-pole reclosing

- Notify the phase selector when a trip operation is imminent. When notified that a single pole operation has been initiated, the open-pole detector
- Initiates blocking of protection elements that can potentially maloperate when a breaker pole is open
- Instructs the phase selector to de-assert all outputs, as an open pole invalidates calculations

The operation of the scheme on a line in a single breaker arrangement is described as follows. The line is protected by a relay using the line pickup and zone 1 phase and ground distance elements, and a permissive overreaching transfer trip scheme using zone 2 phase and ground distance elements as well as negative-sequence directional overcurrent elements as follows:

- ***GND DIR O/C FWD***: `NEG SEQ OC1 FWD`
- ***GND DIR O/C REV***: `NEG SEQ OC1 REV`

Zone 1 is configured to issue a single-pole trip when appropriate using:

- ***TRIP 1-POLE INPUT-1***: `GND DIST Z1 OP`
- ***TRIP 1-POLE INPUT-2***: `PHS DIST Z1 OP`

By default, the POTT scheme issues a single-pole trip. It is assumed that when tripping three poles, both the zone 1 and the POTT initiate three-pole reclosing. This is achieved by setting the following:

- ***TRIP RECLOSE INPUT-1***: `POTT TRIP 3P`
- ***TRIP RECLOSE INPUT-2***: `GND DIST Z1 OP`
- ***TRIP RECLOSE INPUT-3***: `PHS DIST Z1 OP`

We are assuming for this discussion that the relay features that are shown in the Single-Pole Operation figure have been programmed for the application and are in service. The description begins with line breakers open at both the local and remote ends, and the operation of the scheme is described in chronological order.

Because the line is de-energized, the line pickup element is armed. The recloser is presently enabled. An operator requests that breaker control close the breaker, and it operates output relays to close breaker poles A, B, and C. This operator manual-close request is also forwarded from breaker control to recloser, which becomes disabled, de-asserting its `Enabled` output. This output is transferred to trip output, where it converts any input request for a single pole operation into a three-pole operation. At the recloser, the ***AR1 BLK TIME @ MAN CLOSE*** timer is started.

The breaker closes and status monitoring contacts on the breaker poles change state; the new breaker pole states are reported to breaker control, which in turn transfers these states to the recloser, trip output, breaker failure, and open pole detector. Because a fault is not detected the ***AR1 BLK TIME @ MAN CLOSE*** times out and the recloser is enabled, which asserts the `Enabled` output, informing the trip output element that single-pole trip operations are now permitted. When normal voltage appears on the line, the line pickup element is disarmed. As the local line breaker has not tripped, the operator closes the breaker at the remote end of the line, placing the line in service.

13.7.1 SINGLE LINE TO GROUND FAULT

An AG (phase A to ground) fault occurs close to the considered relay. Immediately after the fault, the disturbance detector (50DD) picks-up and activates the phase selector. The phase selector recognizes an AG fault by asserting its PHASE SELECT AG operand. Ground distance zone 1 (AG element) responds to the fault.

At this moment, the request to trip is placed for the trip output. As the fault is recognized as an AG fault, the TRIP PHASE A operand is asserted by the trip output. This signal is passed to the breaker control scheme and results in tripping pole A of the breaker.

Simultaneously with the TRIP PHASE A operand, the TRIP 1-POLE operand is asserted to activate the open pole detector. This detector responds to the TRIP PHASE A signal by declaring phase A open by asserting OPEN POLE OP FA (even before it is actually opened). The `TRIP PHASE A` signal resets only after the breaker actually operates as indicated by its auxiliary contact. At this moment the open pole detector responds to the breaker position and continues to indicate phase A opened. This indication results in establishing blocking signals for distance elements (OPEN POLE BLK AB, OPEN POLE BLK CA operands are asserted). If neutral and negative-sequence overcurrent elements are mapped into the trip output to trigger single-pole tripping, they must be blocked

with the OPEN POLE BLK N operand, specifically provided for this purpose. The OPEN POLE BLK N operand must be assigned through the block setting of the overcurrent element. The two latter operands block phase distance AB and CA elements, respectively (all zones); the OPEN POLE FA OP blocks the ground distance AG elements (all zones). As a result, the Z1 OP and Z2 PKP operands that were picked-up reset immediately. The following distance elements remain operational guarding the line against evolving faults: BG, CG, and BC.

As zone 2 and/or negative-sequence directional elements pick up due to the fault, the permission to trip is keyed to the remote end. Assume here that a single-bit channel is used. If so, no extra information is sent to the remote end, just permission to trip sent over the TX1 operand. Upon receiving permission to trip over RX1, the POTT scheme decides to trip. The scheme checks the phase selector for phase type identification and issues a trip for phase A by asserting the POTT TRIP A operand. This operand is passed to the trip output and results in the same action as described previously for zone 1.

Depending on response times, the actual trip is initiated either by zone 1 or by the POTT scheme. At the moment that the TRIP 1-POLE operand is asserted, the phase selector resets and no other trip action can take place. After the trip command is issued, all the picked up elements are forced to reset by the open pole detector.

The TRIP 1-POLE operand initiates automatically a single-pole autoreclose. The autoreclose is started and asserts the AR RIP operand. This operand keeps blocking the phase selector so that it does not respond to any subsequent events. At the same time, the operand removes zero-sequence directional supervision from ground distance zones 2 and 3 so that they can respond to a single-line-to-ground fault during open pole conditions.

The AR FORCE 3-P TRIP operand is asserted 1.25 cycles following autoreclose initiation. This operand acts as an enabler for any existing trip request. In this case, none of the protection elements is picked up at this time, therefore no more trips are initiated.

When the recloser dead time interval is complete, it signals the breaker control element to close the breaker. The breaker control element operates output relays to close the breaker.

When pole A of the breaker closes, this new status is reported to the breaker control element, which transfers this data to the breaker failure, autorecloser, open pole detector and trip output elements. The response at breaker failure depends on the programming of that element. The response at the autorecloser is not relevant to this discussion. At the open pole detector, the blocking signals to protection elements are de-asserted.

If the fault was transient, then the reset time expires at the autorecloser and the AR FORCE 3-P TRIP and RIP outputs are de-asserted, returning all features to the state described at the beginning of this description.

If the fault was permanent, appropriate protection elements detect this and place a trip request for the trip output element. As the AR FORCE 3-P TRIP is still asserted, the request is executed as a three-pole trip.

The response of the system from this point is as described earlier for the second trip, except that the autorecloser locks out upon the next initiation (depending on the number of shots programmed).

13.7.2 SLG FAULT EVOLVING INTO LLG

When an AG (phase A-to-ground) fault occurs, the events unfold initially as in the previous example. If the fault evolves quickly, the phase selector changes its initial assessment from AG to ABG fault and when the trip request is placed either by the zone 1 or the POTT scheme, a three-pole trip is initiated. When this is the case, all three TRIP PHASE A, B, and C operands are asserted. The command is passed to the breaker control element and results in a three-pole trip. At the same time, the recloser is initiated as per settings of the trip output. As the TRIP 3-POLE operand is asserted (not the TRIP 1-POLE operand), the open pole is not activated. Because the AR RIP in progress is asserted, the phase selector is blocked as well.

If the fault evolves slowly, the sequence is different. The relay trips phase A as in the previous example. The phase selector resets, the open pole detector is activated and forces the zone 1 and zone 2 AG, AB, CA and negative-sequence overcurrent elements to reset. If the zone 1 BG element picks up, or the zone 2 BG element picks up resulting in operation of the POTT scheme, no trip command is issued until the AR FORCE 3-P TRIP is asserted. This happens 1.25 cycles after the first trip. If at this time or any time later a request for trip is placed (due to an evolving fault), a three-pole trip is initiated. The TRIP 1-POLE operand is de-asserted by the TRIP 3-POLE operand, resetting the open pole detector. Shortly all three poles are opened.

When the dead time expires, the recloser signals the breaker control to close the breaker. At this time, all the protection elements are operational, as the open pole detector is not blocking any elements. If the line-side VTs are used, the line pickup element is armed as well. If there is a fault on the line, these elements pick up the fault and issue the next request for trip. This request results in a three-pole trip as the AR FORCE 3-P TRIP is still asserted.

The response of the system from this point is as described earlier for the second trip, except that the recloser goes to lockout upon the next initiation (depending on the number of shots programmed).

13.7.3 PHASE SELECTION

The relay uses phase relations between current symmetrical components for phase selection. First, the algorithm validates if there is enough zero-sequence, positive-sequence, and negative-sequence currents for reliable analysis. The comparison is adaptive; that is, the magnitudes of the three symmetrical components used mutually as restraints confirm if a given component is large enough to be used for phase selection. Once the current magnitudes are validated, the algorithm analyzes phase relations between the negative-sequence and positive-sequence currents and negative sequence and zero-sequence currents (when applicable), as shown in the following figure:

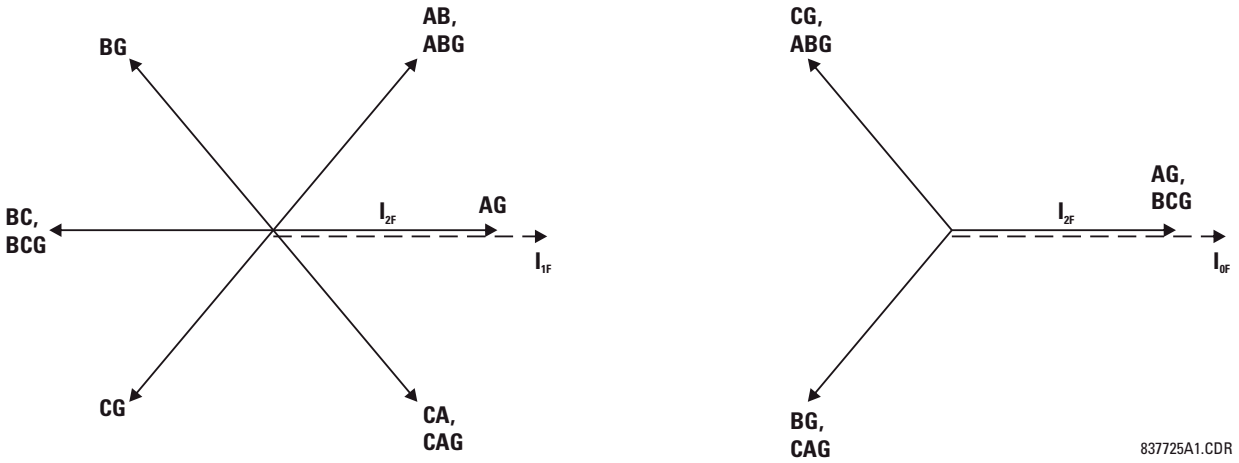

Figure 435: Phase selection principle (ABC phase rotation)

Due to dual comparisons, the algorithm is very secure. For increased accuracy and to facilitate operation in weak systems, the pre-fault components are removed from the analyzed currents. The algorithm is very fast and ensures proper phase selection before any of the correctly set protection elements operates.

Under unusual circumstances, such as weak-infeed conditions with the zero-sequence current dominating during any ground fault, or during cross-country faults, the current-based phase selector may not recognize any of the known fault pattern. If this is the case, voltages are used for phase selection. The voltage algorithm is the same as the current-based algorithm. For example, phase angles between the zero-sequence, negative-sequence, and positive-sequence voltages are used. The pre-fault values are subtracted prior to any calculations.

The pre-fault quantities are captured and the calculations start when the disturbance detector (50DD) operates. When an open pole is declared, the phase selector resets all its outputs operands and ignores any subsequent operations of the disturbance detector.

The phase selector runs continuously. When there is no disturbance in the power system, and the disturbance detector (50DD) from the source assigned as the ***DISTANCE SOURCE*** is reset, then the PHASE SELECT VOID FlexLogic operand is set and all other phase selector operands are reset. All current and voltage sequence components are memorized and continuously updated.

When the disturbance detector (50DD) operates, memory stops being updated and retains two cycles of old current and voltage values. First, purely fault components of current and voltage are calculated by removing the pre-fault (memory) quantities from presently calculated values. A series of conditions are checked with respect to magnitudes and phase angles of current and voltage symmetrical components in order to detect the fault type. Secondly, currents are used to identify the fault type (AG, BG, CG, AB, BC, CA, ABG, BCG, or CAG) according to

the Phase Selection Principle figure. If the currents fail to identify the fault type, and voltages are available, then voltages are used. If any of the above types is determined, then the corresponding FlexLogic operand outlined in the following table is asserted.

FlexLogic operands asserted

Operand	Description
PHASE SELECT AG	Asserted when a phase A to ground fault is detected
PHASE SELECT BG	Asserted when a phase B to ground fault is detected
PHASE SELECT CG	Asserted when a phase C to ground fault is detected
PHASE SELECT AB	Asserted when a phase A to B fault is detected
PHASE SELECT BC	Asserted when a phase B to C fault is detected
PHASE SELECT CA	Asserted when a phase C to A fault is detected
PHASE SELECT ABG	Asserted when a phase A to B to ground fault is detected
PHASE SELECT BCG	Asserted when a phase B to C to ground fault is detected
PHASE SELECT ACG	Asserted when a phase C to A to ground fault is detected

If none of the fault types outlined in the table is determined, then three-phase fault conditions are checked to detect the presence of positive-sequence current and the absence of both zero-sequence and negative-sequence current. If these conditions are met, then the PHASE SELECT 3P FlexLogic operand is asserted; otherwise, the PHASE SELECT VOID operand is asserted, indicating that the phase selector failed to identify the fault type.

Finally, the states of the following additional FlexLogic operands are determined.

FlexLogic operands asserted

Operand	Description
PHASE SELECT SLG	Asserted if any of PHASE SELECT AG, PHASE SELECT BG, or PHASE SELECT CG operands is active
PHASE SELECT MULTI-P	Asserted if neither the PHASE SELECT SLG nor PHASE SELECT VOID operands are being asserted

The phase selector operands are reset a half cycle after the OPEN POLE OP FlexLogic operand is asserted or after delay defined by the ***PHASE SELECTOR RESET*** setting (in the Trip Output element) once the disturbance detector (50DD) initially operated.

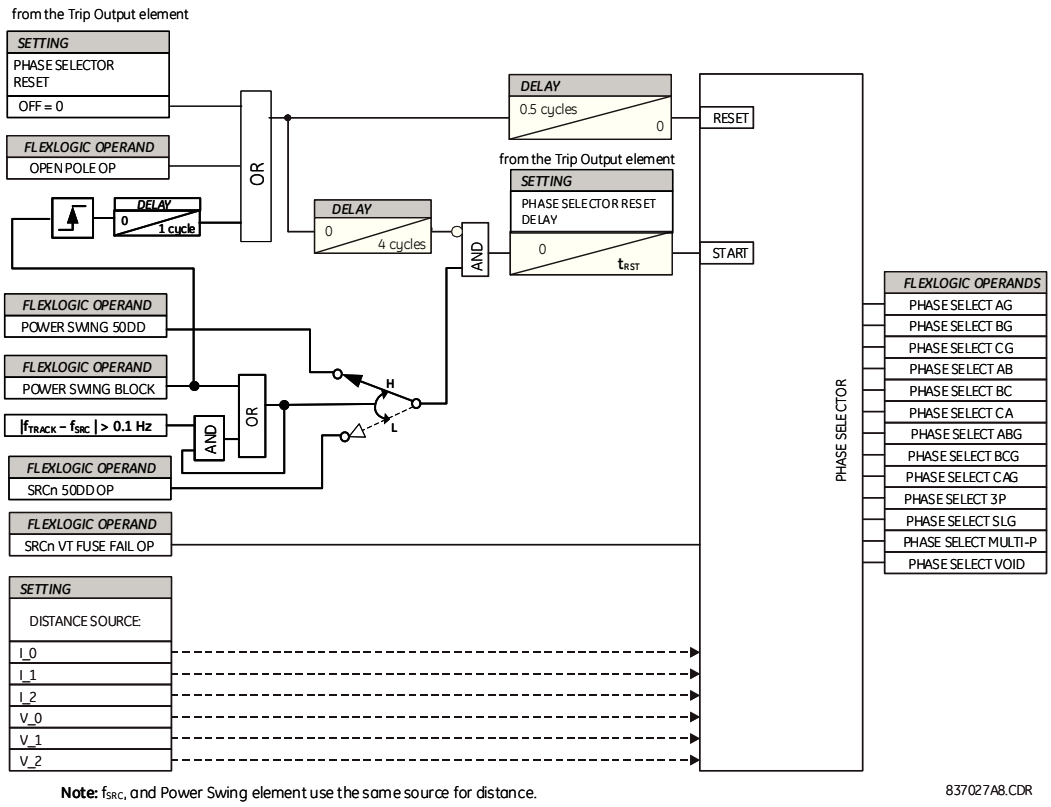

Figure 436: Phase selector logic

13.7.4 COMMUNICATIONS CHANNELS FOR PILOT-AIDED SCHEMES

Pilot-aided schemes transmit a code representing the type of fault determined by the local phase selector according to the scheme logic. At a receiving terminal, the local and remote data are combined to determine the action to be performed. Schemes can be used with channels that can carry one, two or four bits. Using a one-bit channel, the schemes at all terminals of the line use their local phase selectors to identify the fault type and initiate appropriate tripping actions. In single-pole applications however, a three-pole trip can be performed in the event of an in-line single-phase fault co-incident with a fault on a different phase (cross-country fault) that is within the reach of the local phase selector, which is considerably longer than the line. This possibility can be reduced by using a two-bit channel, and eliminated by using a four-bit channel.

Using two-bit channels, the relays can share limited information about their local phase selection, improving considerably the accuracy of single-pole tripping on cross-country faults. Two-bit channels, however, can only provide four different messages, one of which must be “no fault has been detected.” With only three messages available, it is not possible to transmit sufficient information to eliminate the use of local phase selector data, so a three-pole operation can occur in a cross-country fault condition. Using four-bit channels, the relays share enough information about fault types seen from all the line terminals that local fault selector data can be rejected. In addition, in multiple bit systems the relays do not respond to non-valid bit combinations, making the protection system more immune to communication problems than in a single bit system.

Each scheme within the relay has a setting that specifies the number of bits available on the associated communications channel. This setting defines the input (RX1, RX2, RX3, RX4) and output (TX1, TX2, TX3, TX4 for communications and [Scheme Abbreviation] TRIP A, TRIP B, TRIP C, TRIP 3P for action) operands used by the scheme, the data codes used to convey fault data between terminals, and the method of combining information from the local and remote terminals to produce an output.

13.7.4.1 SINGLE-BIT CHANNELS

The TX1 and RX1 operands are used, and fault data is coded per the following tables:

Permissive scheme transmit codes for one-bit channels

Phase selector determination of fault type	Bit pattern transmitted
	TX1
AG, BC, BCG, BG, CA, CAG, CG, AB, ABG, 3P	1
Unrecognized or AR FORCE 3P TRIP	1
None of the above	0

Blocking scheme transmit codes for one-bit channels

Phase selector determination of fault type	Bit pattern transmitted
	TX1
AG, BC, BCG, BG, CA, CAG, CG, AB, ABG, 3P	0
Unrecognized or AR FORCE 3P TRIP	0
None of the above	1

Unblocking scheme transmit codes for one-bit channels

Phase selector determination of fault type	Bit pattern transmitted
	TX1
AG, BC, BCG, BG, CA, CAG, CG, AB, ABG, 3P	1
Unrecognized or AR FORCE 3P TRIP	1
None of the above	0

The action output is generated per the following tables:

Permissive scheme trip table for one-bit channels

Remote data		Local data	
Bit pattern received	Remote determination of fault type	Local determination of fault type	Trip output
RX1			
1	Any	AG Fault	Trip Phase A (A+N/G)
1	Any	BG Fault	Trip Phase B (B+N/G)
1	Any	CG Fault	Trip Phase C (C+N/G)
1	Any	AB, ABG, BC, BCG, CA, DAG, 3P, Unrecognized	Trip Three Phases (per local selection, unrecognized and 3P=A+B+C+N/G)

Blocking scheme trip table for one-bit channels

Remote data		Local data	
Bit pattern received	Remote determination of fault type	Local determination of fault type	Trip output
RX1			
0	Any	AG Fault	Trip Phase A
0	Any	BG Fault	Trip Phase B
0	Any	CG Fault	Trip Phase C
0	Any	AB, ABG, BC, BCG, CA, DAG, 3P, Unrecognized	Trip Three Phases

Unblocking scheme trip table for one-bit channels

Remote data			Local data	
Bit pattern received		Remote determination of fault type	Local determination of fault type	Trip output
RX1	LOG1			
0 or 1	1	Any	AG Fault	DCUB Trip A
0 or 1	1	Any	BG Fault	DCUB Trip B
0 or 1	1	Any	CG Fault	DCUB Trip C
0 or 1	1	Any	AB, ABG, BC, BCG, CA, CAG, 3P, Unrecognized	DCUB Trip 3P

The scheme initiates a three-phase trip if the phase selector fails to recognize the fault type or after the *AR FORCE 3P TRIP* operand is asserted.

13.7.4.2 TWO-BIT CHANNELS

The TX1, TX2, RX1, and RX2 operands are used and fault data is coded per the following tables:

Permissive scheme transmit codes for two-bit channels

Phase selector determination of fault type	Bit pattern transmitted	
	TX1	TX2
AG, BC, BCG	1	0
BG, CA, CAG	0	1
CG, AB, ABG, 3P, Unrecognized	1	1

Blocking scheme transmit codes for two-bit channels

Phase selector determination of fault type	Bit pattern transmitted		FlexLogic operands asserted	
	TX1	TX2	TX1 STOP	TX2 STOP
AG, BC, BCG	0	1	1	0
BG, CA, CAG	1	0	0	1
CG, AB, ABG, 3P	0	0	1	1
CG, AB, ABG, 3P, Unrecognized	0	0	1	1

Unblocking scheme transmit codes for two-bit channels

Phase selector determination of fault type	Bit pattern transmitted	
	TX1	TX2
AG, BC, BCG	1	0
BG, CA, CAG	0	1
CG, AB, ABG, 3P, Unrecognized	1	1

The action output is generated per the following tables:

Permissive scheme trip table for two-bit channels

Remote data			Local data	
Bit pattern received		Remote determination of fault type	Local determination of fault type	Trip output
RX1	RX2			
1	0	AG, BC, BCG	AG, AB, ABG CA, CAG, 3P	Trip Phase A
0	1	BG, CA, CAG	AG	
1	1	CG, AB, ABG, 3P, Unrecognized	AG	
0	1	BG, CA, CAG	BG, AB, ABG, BC, BCG, 3P	Trip Phase B
1	1	CG, AB, ABG, 3P, Unrecognized	BG	
1	0	AG, BC, BCG	BG	
1	1	CG, AB, ABG, 3P, Unrecognized	CG, BC, BCG, CA, CAG	Trip Phase C
1	0	AG, BC, BCG	CG	
1	1	BG, CA, CAG	CG	
1	1	CG, AB, ABG, 3P, Unrecognized	AB, ABG, 3P, Unrecognized	Trip 3 phases
1	0	AG, BC, BCG	BC, BCG, Unrecognized	
0	1	BG, CA, CAG	CA, CAG, Unrecognized	

Blocking scheme trip table for two-bit channels

Remote data			Local data	
Bit pattern received		Remote determination of fault type	Local determination of fault type	Trip output
RX1	RX2			
0	1	AG, BC, BCG	AG, AB, ABG CA, CAG, 3P	DIR BLOCK TRIP A
1	0	BG, CA, CAG	AG	
0	0	CG, AB, ABG, 3P, Unrecognized	AG	
1	0	BG, CA, CAG	BG, AB, ABG, BC, BCG, 3P	DIR BLOCK TRIP B
0	0	CG, AB, ABG, 3P, Unrecognized	BG	
0	0	AG, BC, BCG	BG	
0	0	CG, AB, ABG, 3P, Unrecognized	CG, BC, BCG, CA, CAG	DIR BLOCK TRIP C
0	1	AG, BC, BCG	CG	
1	0	BG, CA, CAG	CG	
0	0	CG, AB, ABG, 3P, Unrecognized	AB, ABG, 3P, Unrecognized	DIR BLOCK TRIP 3P
0	1	AG, BC, BCG	BC, BCG, Unrecognized	
1	0	BG, CA, CAG	CA, CAG, Unrecognized	

Unblocking scheme trip table for two-bit channels

Remote data					Local data	
Bit pattern received				Remote determination of fault type	Local determination of fault type	Trip output
RX1	LOG1	RX2	LOG2			
1	1	0	0	AG, BC, BCG	AG, AB, ABG CA, CAG, 3P	DCUB Trip A
0	1	0	0			
0	0	1	1	BG, CA, CAG	AG	
0	0	0	1			
1	1	1	1	CG, AB, ABG, 3P, Unrecognized	AG	
0	1	1	1			
1	1	0	1			
0	1	0	1			
0	0	1	1	BG, CA, CAG	BG, AB, ABG BC, BCG, 3P	DCUB Trip B
0	0	0	1			
1	1	1	1	CG, AB, ABG, 3P, Unrecognized	BG	
0	1	1	1			
1	1	0	1	CG, AB, ABG, 3P, Unrecognized	BG	
0	1	0	1			
1	1	0	0			
0	1	0	0			
1	1	0	0	AG, BC, BCG	CG	DCUB Trip C
0	1	0	0			
0	0	1	1	BG, CA, CAG	CG	
0	0	0	1			
1	1	1	1	CG, AB, ABG, 3P, Unrecognized	CG, BC, BCG, CA, CAG	
0	1	1	1			
1	1	0	1			
1	1	0	0	AG, BC, BCG	BC, BCG, Unrecognized	DCUB Trip 3P
0	1	0	0			
0	0	1	1	BG, CA, CAG	CA, CAG, Unrecognized	
0	0	0	1			
1	1	1	1	CG, AB, ABG, 3P, Unrecognized	AB, ABG, 3P, Unrecognized	
0	1	1	1			
1	1	0	1			
0	1	0	1			
0	1	0	1			

13.7.4.3 FOUR-BIT CHANNELS

The TX1, TX2, TX3, TX4, RX1, RX2, RX3, and RX4 operands are used:

Permissive scheme transmit codes for four-bit channels

Phase selector determination of fault type	Bit pattern transmitted			
	TX1	TX2	TX3	TX4
AG	1	0	0	0
BG	0	1	0	0
CG	0	0	1	0
AB, ABG, BC, BCG, CA, CAG, 3P, Unrecognized	0	0	0	1

Blocking scheme transmit codes for four-bit channels

Phase selector determination of fault type	Bit pattern transmitted				FlexLogic operands asserted			
	TX1	TX2	TX3	TX4	TX1 STOP	TX2 STOP	TX3 STOP	TX4 STOP
AG	0	1	1	1	1	0	0	0
BG	1	0	1	1	0	1	0	0
CG	1	1	0	1	0	0	1	0
AB, ABG, BC, BCG, CA, CAG, 3P, Unrecognized	1	1	1	0	0	0	0	1

Unblocking scheme transmit codes for four-bit channels

Phase selector determination of fault type	Bit pattern transmitted			
	TX1	TX2	TX3	TX4
AG	1	0	0	0
BG	0	1	0	0
CG	0	0	1	0
AB, ABG, BC, BCG, CA, CAG, 3P, Unrecognized	0	0	0	1

The action output is generated per the following tables:

Permissive scheme trip table for four-bit channels

Remote data					Local data	
Bit pattern received				Remote determination of fault type	Local determination of fault type	Trip output
RX1	RX2	RX3	RX4			
0	0	0	1	MULTI-P	AG	Trip Phase A
0	1	0	0	BG	AG	
0	0	1	0	CG	AG	
1	0	0	0	AG	AG, AB, ABG, CA, CAG, 3P, Unrecognized	
0	1	0	0	BG	BG, AB, ABG, BC, BCG, 3P, Unrecognized	Trip Phase B
1	0	0	0	AG	BG	
0	0	1	0	CG	BG	
0	0	0	1	MULTI-P	BG	

Remote data					Local data	
Bit pattern received				Remote determination of fault type	Local determination of fault type	Trip output
RX1	RX2	RX3	RX4			
0	0	1	0	CG	CG, BC, BCG, CA, CAG, 3P, Unrecognized	Trip Phase C
1	0	0	0	AG	CG	
0	1	0	0	BG	CG	
0	0	0	1	MULTI-P	CG	
1	0	0	0	AG	BC, BCG	Trip 3 phases
0	1	0	0	BG	CA, CAG	
0	0	1	0	CG	AB, ABG	
0	0	0	1	MULTI-P	Unrecognized	

Blocking scheme trip table for four-bit channels

Remote data					Local data	
Bit pattern received				Remote determination of fault type	Local determination of fault type	Trip output
RX1	RX2	RX3	RX4			
0	0	0	0	Any while the INIT signal was not established	-	Trip as for single-bit channel
1	1	1	0	MULTI-P	AG	DIR BLOCK TRIP A
1	0	1	1	BG	AG	
1	1	0	1	CG	AG	
0	1	1	1	AG	AG, AB, ABG, CA, CAG, 3P, Unrecognized	
1	0	1	1	BG	BG, AB, ABG, BC, BCG, 3P, Unrecognized	DIR BLOCK TRIP B
0	1	1	1	AG	BG	
1	1	0	1	CG	BG	
1	1	1	0	MULTI-P	BG	
1	1	0	1	CG	CG, BC, BCG, CA, CAG, 3P, Unrecognized	DIR BLOCK TRIP C
0	1	1	1	AG	CG	
1	0	1	1	BG	CG	
1	1	1	0	MULTI-P	CG	
0	1	1	1	AG	BC, BCG	DIR BLOCK TRIP 3P
1	0	1	1	BG	CA, CAG	
1	1	0	1	CG	AB, ABG	
1	1	1	0	MULTI-P	Unrecognized	

Unblocking scheme trip table for four--bit channels

Remote data									Local data	
Bit pattern received								Remote determination of fault type	Local determination of fault type	Trip output
RX1	LOG1	RX2	LOG2	RX3	LOG3	RX4	LOG4			
0	0	0	0	0	0	1	1	MULTI-P	AG	DCUB Trip A
0	0	0	0	0	0	0	1			
0	0	1	1	0	0	0	0	BG		
0	0	0	1	0	0	0	0			
0	0	0	0	1	1	0	0	CG		
0	0	0	0	0	1	0	0			
1	1	0	0	0	0	0	0	AG	AG, AB, ABG, CA, CAG, 3P, Unrecognized	
0	1	0	0	0	0	0	0			
0	0	1	1	0	0	0	0	BG	AG, AB, ABG, CA, CAG, 3P, Unrecognized	DCUB Trip B
0	0	0	1	0	0	0	0			
1	1	0	0	0	0	0	0	AG	BG	
0	1	0	0	0	0	0	0			
0	0	0	0	1	1	0	0	CG		
0	0	0	0	0	1	0	0			
0	0	0	0	0	0	1	1	MULTI-P		
0	0	0	0	0	0	0	1			
0	0	0	0	1	1	0	0	CG	CG, BC, BCG, CA, CAG, 3P, Unrecognized	DCUB Trip C
0	0	0	0	0	1	0	0			
1	1	0	0	0	0	0	0	AG	CG	
0	1	0	0	0	0	0	0			
0	0	1	1	0	0	0	0	BG		
0	0	0	1	0	0	0	0			
0	0	0	0	0	0	1	1	MULTI-P		
0	0	0	0	0	0	0	1			
1	1	0	0	0	0	0	0	AG	BC, BCG	DCUB Trip 3P
0	1	0	0	0	0	0	0			
0	0	1	1	0	0	0	0	BG	CA, CAG	
0	0	0	1	0	0	0	0			
0	0	0	0	1	0	0	0	CG	AB, ABG	
0	0	0	0	0	1	0	0			
0	0	0	0	0	0	1	1	MULTI-P	3P or Unrecognized	
0	0	0	0	0	0	0	1			

13.7.5 PERMISSIVE ECHO SIGNALING

The “echo” feature can reduce the response time of an over-reaching scheme when a terminal is disconnected from the line. In this condition, a zone 2 element at the terminal that remains in-service can detect a fault, but cannot trip,

as a permissive signal is not received from the remote terminal. This feature is provided in the permissive over-reaching transfer trip and hybrid permissive over-reaching transfer trip schemes.

Permissive over-reaching transfer trip scheme

When used, this feature “echoes” a reliable received permissive signal back to the originating terminal when a line-end-open condition is identified by the line pickup logic. The permissive echo is programmed as a one-shot logic. The echo is sent only once and then the echo logic locks out for a settable period. The duration of the echo pulse does not depend on the duration or shape of the received Rx signals but is settable. The echo is sent back only if none of the overreaching protection elements operates.

Hybrid permissive over-reaching transfer trip permissive echo

When used, this feature “echoes” a reliable received permissive signal back to the originating terminal if the line-end-open condition is recognized by the line pickup scheme and the fault is not identified as a reverse fault by the zone 4 or the ground directional overcurrent function (if used). The permissive echo is programmed as a one-shot logic. The echo is sent only once and then the echo logic locks out for a settable period. The duration of the echo pulse does not depend on the duration or shape of the received Rx signal but is settable as ***ECHO DURATION***. The echo is sent back only if none of the overreaching protection elements operates.

13.7.5.1 PERMISSIVE ECHO OPERANDS AND TRANSMIT CODES

In single-pole tripping, single-bit channel applications the signal received on bit number 1 (Rx1) is echoed back on bit number 1 (Tx1). In two- and four-bit applications, the following echo tables apply.

Echo table for two-bit channels

Local determination of fault type	Echoed bits	
	TX1	TX2
AG	1	0
BG	0	1
CG	1	1
AB, ABG, BC, BCG, CA, CAG, 3P, Unrecognized	Send back as received	

Echo table for four-bit channels

Local determination of fault type	Echoed bits			
	TX1	TX2	TX3	TX4
AG	1	0	0	0
BG	0	1	0	0
CG	0	0	1	0
AB, ABG, BC, BCG, CA, CAG, 3P, Unrecognized	Send back as received			

Note:
For the directional comparison unblocking scheme, the echo is performed in the same manner as the Hybrid POTT echo, but by applying additionally the following logic for both the Rx (received) and LOG (loss-of-guard) for each channel: $ECHO_N = LOG_N$ *AND* RX_N

13.7.6 PILOT SCHEME COORDINATION

The pilot schemes use the Phase Selector for local fault type identification. The latter can fail to respond to certain fault scenarios. Examples are simultaneous forward and reverse fault, simultaneous SLG and LL fault involving

different phases (for example AG and BC), or two simultaneous faults in the same direction but at very different locations. The Phase Selector is optimized to either indicate correctly the forward fault or to assert the Void flag. For example, a combination of AG and BC is not a valid fault type; it is two different simultaneous faults and as such cannot be described by any single fault pattern, therefore, the Phase Selector asserts the Void flag.

The VOID phase selection combined with a local trip request (such as high-set directional overcurrent) results in a threepole trip as per the Trip Output logic.

The Pilot Schemes, however, try to recover more information from the distance elements. Each scheme uses a forward looking, either underreaching or overreaching, distance zone. A given Pilot Scheme analyzes this zone for fault type identification if the Phase Selector asserts its Void flag: the DUTT scheme uses Z1; all the other schemes use Z2. The schemes analyze all six fault loops of the zone to determine the fault type.

For example, simultaneous forward AG and reverse BG faults can result in the Void indication. The POTT scheme would analyze the Z2 response. As only the AG element is picked up, the local phase selection is determined as AG. This is a correct indication.

Depending on the number of bits used for communications, the accuracy of the overall response can be further improved as illustrated in the next section.

This enhanced operation of the pilot-aided schemes is the reason to use a short pilot scheme priority time when setting the Trip Output logic. The timer forces the scheme to wait for a decision from the pilot scheme for a short period of time before accepting any local trip request. The advantage, however, materializes only if more than one-bit communications channels are used, and is important only on parallel lines or when the application requires maximum accuracy of singlepole tripping. In other cases, it is not recommended to delay the local trip decision.

13.7.7 CROSS-COUNTRY FAULT EXAMPLE

Assume a single pole operation application where relays are used to protect a two-terminal line, (terminals T1 and T2) using phase and ground distance zone 1, 2, and 3 elements in a permissive over-reaching transfer trip scheme. The performance of the system with one, two, and four-bit communications channels is outlined for a mid-line phase A-to-ground fault and a co-incident phase B-to-ground fault just behind terminal T2. Assume also that the reclosers are enabled and reset.

At T1 the following protection elements pick up:

- Ground Distance Zone 1, 2, and 3 for an AG fault
- Ground Distance Zone 2 and 3 for a BG fault
- Phase Distance Zone 2 and 3 for an AB fault

At T1, the phase selector determines the fault is type ABG. This response is independent from the distance elements; the Phase Selector sees two forward faults:

At T2, the following protection elements pick up:

- Ground Distance Zone 1, 2, and 3 for an AG fault

At T2 the phase selector determines the fault is type AG. The reverse BG fault is likely to be ignored.

If a one-bit channel is used, terminal T1 trips three poles but terminal T2 trips phase A only, which is undesirable. See the following table:

One-bit channel tripping

Terminal	Remote data		Local data	
	Bit pattern received	Remote determination of fault type	Local determination of fault type	Trip output
	RX1			
T1	1	Any	Multi-P (APG)	Trip three phases
T2	1	Any	AG	Trip phase A

If a two-bit channel is used, both terminals trip phase A only, which is desired. See the following table:

Two-bit channel tripping

Terminal	Remote data			Local data	
	Bit pattern received		Remote determination of fault type	Local determination of fault type	Trip output
	RX1	RX2			
T1	1	0	AG	ABG	Trip phase A
T2	1	1	ABG	AG	Trip phase A

If a four-bit channel is used, both terminals trip phase A only, which is desired. See the following table:

Four-bit channel tripping

Terminal	Remote data					Local data	
	Bit pattern received				Remote determination of fault type	Local determination of fault type	Trip output
	RX1	RX2	RX3	RX4			
T1	0	0	0	1	AG	ABG	Trip phase A
T2	1	0	0	0	ABG	AG	Trip phase A

13.8 FAULT LOCATOR

13.8.1 SINGLE-END FAULT LOCATOR

Fault type determination is required for calculation of fault location. The algorithm uses the angle between the negative and positive sequence components of the relay currents. To improve accuracy and speed of operation, the fault components of the currents are used; that is, the pre-fault phasors are subtracted from the measured current phasors. In addition to the angle relationships, certain extra checks are performed on magnitudes of the negative and zero-sequence currents.

The single-ended fault location method assumes that the fault components of the currents supplied from the local (A) and remote (B) systems are in phase. The figure shows an equivalent system for fault location.

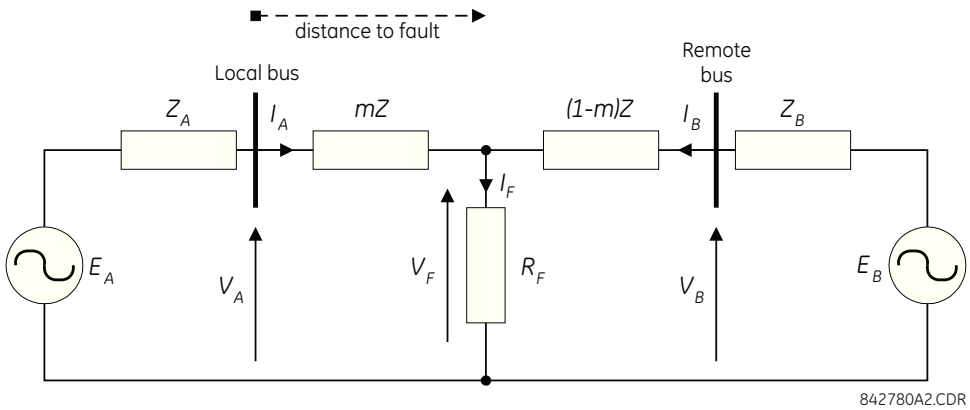

Figure 437: Equivalent system for fault location

The following equations hold true for this equivalent system:

$$V_A = m \cdot Z \cdot I_A + R_F \cdot I_F$$

where:

- m = sought pu distance to fault
- Z = positive sequence impedance of the line
- I_F = fault current flowing through the fault point

The fault network during a fault can be decomposed into a pre-fault and a pure-fault network. Therefore, the fault current I_F is calculated as follows by using the current division rule in the pure-fault network.

$$I_F = \frac{Z_A + Z + Z_B}{(1-m)Z + Z_B} \cdot I_{AF} = \frac{1}{d} \cdot I_{AF}$$

where:

- d is the current distribution factor, which is a complex value.

Substituting the second equation into the first equation and multiplying both sides by the complex conjugate of I_{AF},

$$V_A \cdot I^*_{AF} = m \cdot Z \cdot I_A \cdot I^*_{AF} + R_F \cdot \frac{1}{d} \cdot |I_{AF}|^2$$

where:

- * denotes complex conjugate

Assuming the system is homogeneous, d is then a real number. The fault resistance does not have any imaginary part. The preceding equation solved for the unknown m yields the following fault location algorithm:

$$m = \frac{Im(V_A \cdot I_{AF}^*)}{Im(Z \cdot I_A \cdot I_{AF}^*)}$$

where:

- Im( ) stands for the imaginary part of a complex number

Depending on the fault type, appropriate voltage and current signals are selected from the phase quantities before applying the preceding equation (the superscripts denote phases, the subscripts denote stations).

For AG faults:

$$V_A = V_A^A, \quad I_A = I_A^A + K_0 \cdot I_{0A} + Z_{0M}/Z \cdot I_{0M}, \quad I_{AF} = I_A^A - I_{Apre}^A$$

For BG faults:

$$V_A = V_A^B, \quad I_A = I_A^B + K_0 \cdot I_{0A} + Z_{0M}/Z \cdot I_{0M}, \quad I_{AF} = I_A^B - I_{Apre}^B$$

For CG faults:

$$V_A = V_A^C, \quad I_A = I_A^C + K_0 \quad I_{0A} + Z_{0M}/Z \quad I_{0M}, \quad I_{AF} = I_A^C - I_{Apre}^C$$

For AB and ABG faults:

$$V_A = V_A^A - V_A^B, \quad I_A = I_A^A - I_A^B, \quad I_{AF} = (I_A^A - I_A^B) - (I_{Apre}^A - I_{Apre}^B)$$

For BC and BCG faults:

$$V_A = V_A^B - V_A^C, \quad I_A = I_A^B - I_A^C, \quad I_{AF} = (I_A^B - I_A^C) - (I_{Apre}^B - I_{Apre}^C)$$

For CA and CAG faults:

$$V_A = V_A^C - V_A^A, \quad I_A = I_A^C - I_A^A, \quad I_{AF} = (I_A^C - I_A^A) - (I_{Apre}^C - I_{Apre}^A)$$

where:

- K_0 is the zero sequence compensation factor (for the first six equations).
- Z_{0M} is the mutual zero sequence impedance
- I_G is the ground current of the adjacent line.
- $I_{0M} = I_G/3$

The I_{0M} compensation term is applied for the entirely parallel line.

For ABC faults, all three AB, BC, and CA loops are analyzed and the final result is selected based upon consistency of the results.

The element calculates the distance to the fault (with m in miles or kilometers) and the phases involved in the fault.

The relay allows locating faults from delta-connected VTs. If the FAULT REPORT 1 VT SUBSTITUTION setting is set to “None,” and the VTs are connected in wye, the fault location is performed based on the actual phase to ground voltages. If the VTs are connected in delta, fault location is suspended.

If the ***FAULT REPORT 1 VT SUBSTITUTION*** setting value is “V0” and the VTs are connected in a wye configuration, the fault location is performed based on the actual phase to ground voltages. If the VTs are connected in a delta configuration, fault location is performed based on the delta voltages and externally supplied neutral voltage.

$$V_A = \frac{1}{3}(V_N + V_{AB} - V_{CA})$$

$$V_B = \frac{1}{3}(V_N + V_{BC} - V_{AB})$$

$$V_B = \frac{1}{3}(V_N + V_{CA} - V_{BC})$$

If the ***FAULT REPORT 1 VT SUBSTITUTION*** setting value is “I0” and the VTs are connected in a wye configuration, the fault location is performed based on the actual phase to ground voltages. If the VTs are connected in a delta configuration, fault location is performed based on the delta voltages and zero-sequence voltage approximated based on the zero-sequence current:

$$V_A = \frac{1}{3}(V_{AB} - V_{CA}) - Z_{SYS0}I_0$$

$$V_B = \frac{1}{3}(V_{BC} - V_{AB}) - Z_{SYS0}I_0$$

$$V_B = \frac{1}{3}(V_{CA} - V_{BC}) - Z_{SYS0}I_0$$

where Z_{SYS0} is the equivalent zero-sequence impedance behind the relay as entered under the fault report setting menu.

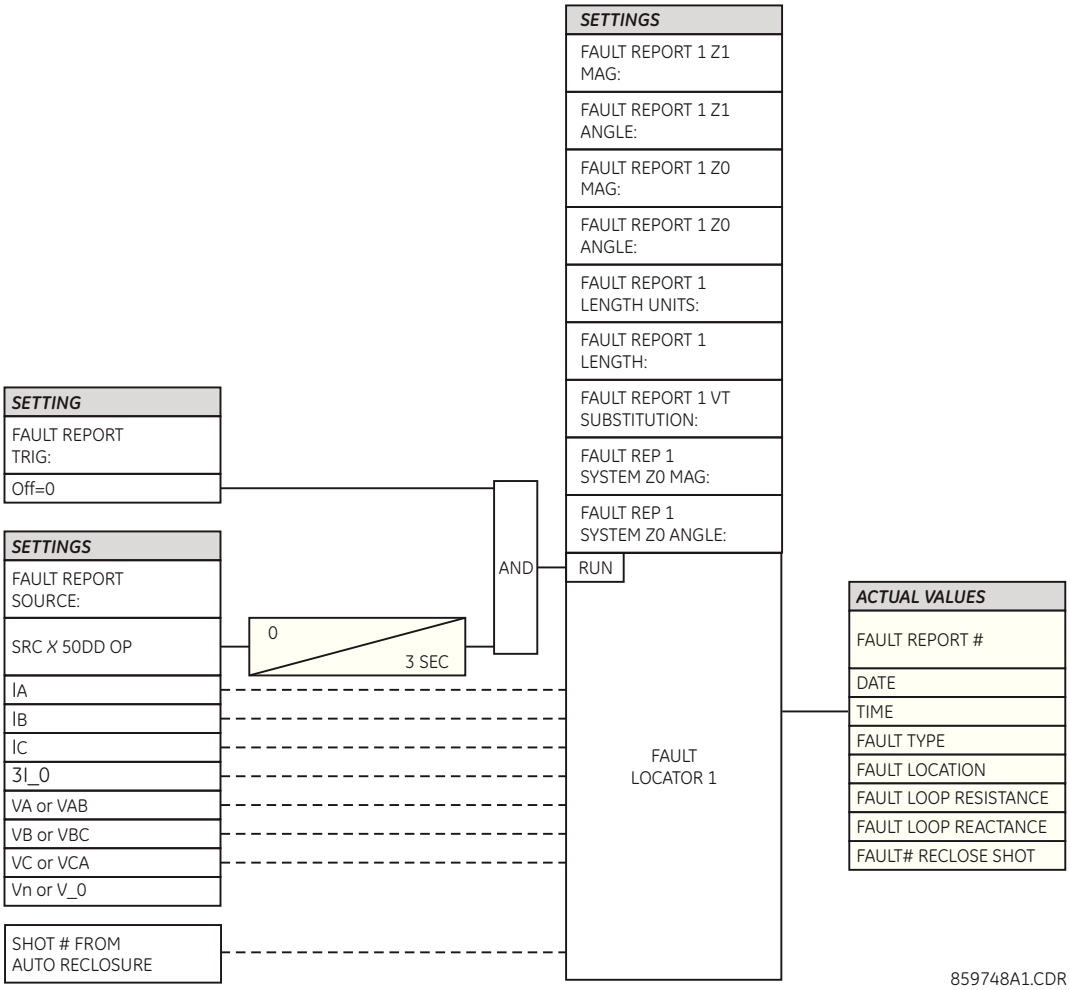

Figure 438: Fault locator scheme

Note:
Since the fault locator algorithm is based on the single-end measurement method, in three-terminal configuration the estimation of fault location may not be correct at all three terminals especially if fault occurs behind the line'sn tap respective to the given relay.

13.9 SUBCYCLE DISTANCE ALGORITHM

To improve operation speed of the phase and ground distance zone 1, 2, and 4 elements under CVT transients and decaying DC conditions at high SIRs, a subcycle distance algorithm, which is based on the short window method with decaying DC accounted, has been included in the relay.

This subcycle distance algorithm runs in parallel with the existing full-cycle Fourier phasor based regular distance element as shown in the figure. Each element can independently activate the distance pickup operand. The subcycle distance algorithm does not run unless it is armed by the disturbance detector (50DD). After it is armed, the subcycle distance algorithm only runs for three cycles and then exits itself, to achieve optimal operation speed, security, and dependability requirement of the overall protection scheme.

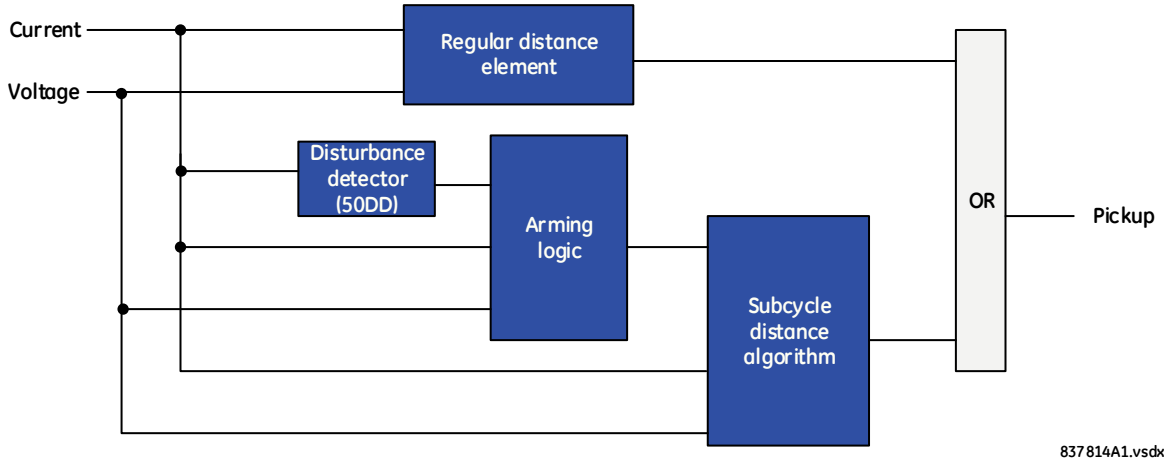

Figure 439: Integration of subcycle distance algorithm with regular distance element

CHAPTER 14

MAINTENANCE

14.1 CHAPTER OVERVIEW

This chapter contains the following sections:

Chapter Overview 946
Monitoring 947
General maintenance 950
Files and Settings 951
Replace module 967
Battery 970
Repairs 972
Storage and disposal 973

14.2 MONITORING

Devices and data can be monitored.

14.2.1 DEVICES WITH SITE TARGETS

To view an overview of devices:

1. Access the Site Targets item in the Online Window area, below the list of devices. It can take a few minutes for all devices to be read.
2. Acknowledge any messages for unaccessible devices. The Site Targets window opens when done.

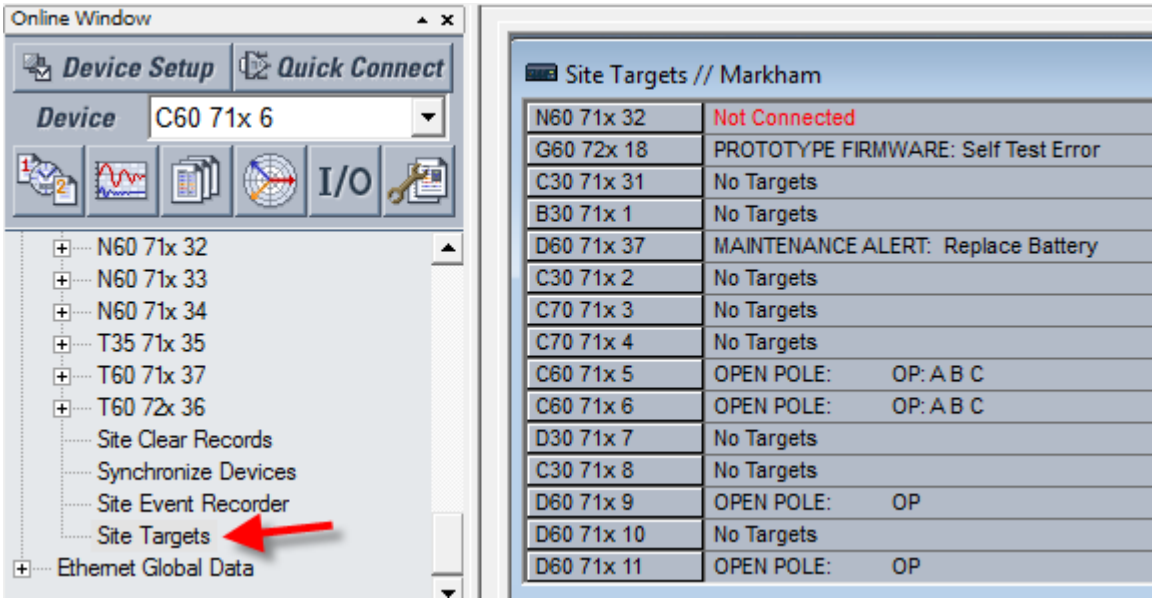

Figure 440: Site Targets window

14.2.2 DATA WITH MODBUS ANALYZER

Use the Modbus Analyzer under ***Maintenance > Modbus Analyzer*** to monitor the values of the UR device. Use the Modbus memory map addresses outlined in the UR Family Communications Guide for the entries.

The upper part of the window displays values. The lower part of the window is for factory service use.

The first row in the figure shows that Contact Output 1 operation is being monitored. Its Modbus address is CAFA. The actual value read from the device is 0, which means that it is off.

The second row in the figure shows the Contact Output 1 Name. It has a Modbus address of CAF0 and a default value of `Cont Op 1`. None of ***Selection*** column settings render this value because they present the information based on numbering systems.

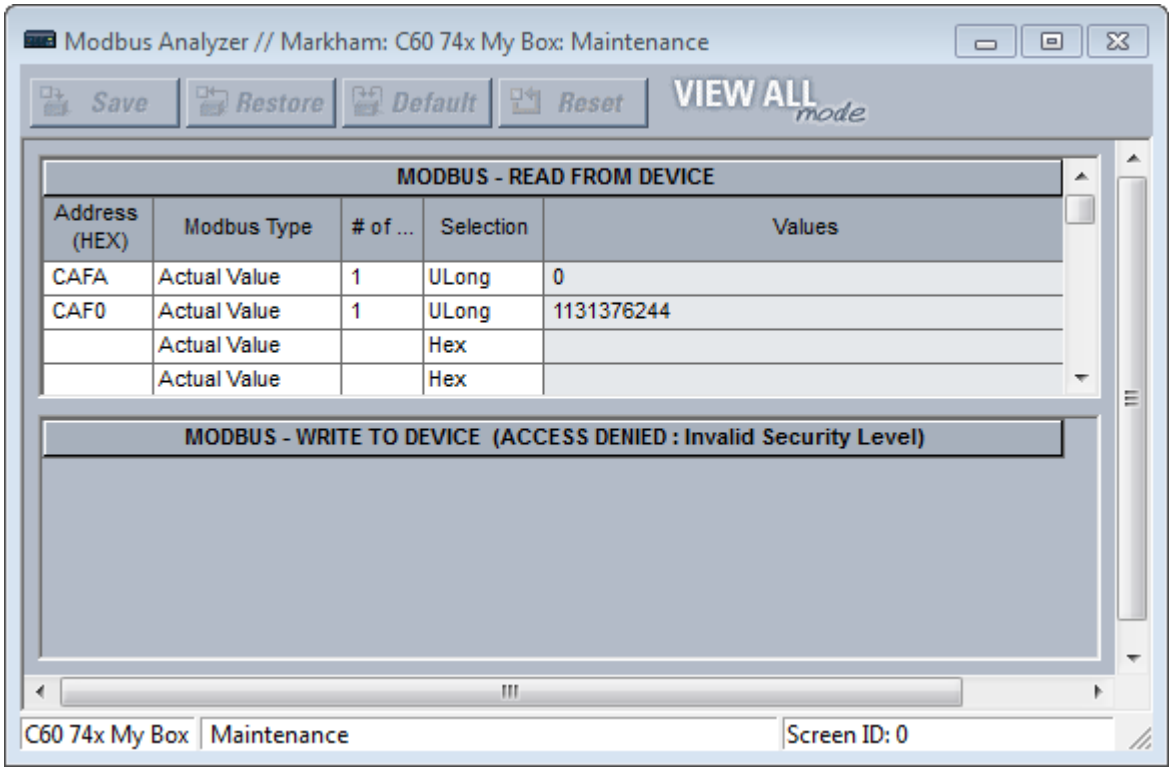

Figure 441: Modbus Analyzer used to monitor actual values on a UR

Address (HEX)

- Modbus address in hexadecimal. See the Modbus memory map in the UR Family Communications Guide or in the web interface (enter IP address of UR device in a web browser). Convert the decimal address in the Modbus memory map to hexadecimal.

Modbus Type

- Actual Value: To read the data in the UR device
- Setting: To read a setting in the UR device
- Coil: To read a command in the UR device

of

- Element, input, or output to read. An example is 1 for Contact Output 1.

Selection (examples demonstrate various ways to represent 0)

- Hex: A decimal numbering system based on 16 possible values, from 0 to 9 and A to F. An example is 0x0000.
- Char: A single unicode character, such as C. An example is 0.
- Int: A 32-bit number, either positive or negative. An example is 0.
- UInt: Unsigned 32-bit integer, which means that it cannot be negative but can be twice as large as a signed integer. An example is 0.
- Long: A 64-bit number, either positive or negative. An example is 0.

- ULong: Unsigned 64-bit number, which means that it cannot be negative but can be twice as large as a signed 64-bit number. An example is 0.
- Float: A numbering system with no fixed number of digits before or after the decimal point. An example is 0.000000.
- Binary: A numbering system using 0 and 1. An example is 0000-0000-0000-0000.

Entries are not saved when closing the window.

14.3 GENERAL MAINTENANCE

As the relay is microprocessor-based, its characteristics do not change over time. In addition, the relay has continuous self-monitoring during operation, reporting any issues detected. For these reasons, routine maintenance of the relay is not required. When used in a controlled indoor environment with electrical conditions compliant with the specifications, the expected service life is 20 years, if manufactured after June 2014.

We appreciate that some customer maintenance practices stipulate routine maintenance of products in excess of the manufacturer's recommendation. Should this be your organization's policy, you might consider the following maintenance options:

In-service maintenance

- Visual verification of the analog values integrity, such as voltage and current (in comparison to other devices on the corresponding system).
- Visual verification of active alarms, relay display messages, and LED indications.
- LED test.
- Visual inspection for any damage, corrosion, dust, or loose wires.
- Event recorder file download with further events analysis.

Out-of-service maintenance

- Check wiring connections for firmness.
- Analog values (currents, voltages, RTDs, analog inputs) injection test and metering accuracy verification. Calibrated test equipment is required.
- Protection elements setting verification (analog values injection or visual verification of setting file entries against relay settings schedule).
- Contact inputs and outputs verification. This test can be conducted by direct change of state forcing or as part of the system functional testing.
- Visual inspection for any damage, corrosion, or dust.
- Event recorder file download with further events analysis.
- LED Test and pushbutton continuity check.

Note:
To avoid deterioration of electrolytic capacitors, power up units that are stored in a de-energized state once per year, for one hour continuously.

Unscheduled maintenance (system interruption)

View the event recorder and oscillography or fault report for correct operation of inputs, outputs, and elements.

14.4 FILES AND SETTINGS

14.4.1 RETRIEVE FILES

Data, oscillography, log, events, routing, ARP, and other files can be transferred using the EnerVista software when using the graphical front panel. These files can be requested by technical support staff.

To retrieve a file using EnerVista software:

1. If the CyberSentry option is enabled, log in to the EnerVista software using the Administrator role.
2. In the Online Window area of EnerVista, access ***Maintenance > Retrieve File***. The window opens.
3. Note the destination folder to which the file is to be saved at the top and change it if required. You can copy the path or open the folder for convenience at this time.
4. Select the file to download from the UR device.
5. Click the **Read File** button. The file is saved to the destination folder. The EnerVista window remains open to download additional files

14.4.2 CYBERSENTRY SECURITY EVENT FILES

CyberSentry security events are available in the following files:

- `SECURITY_EVENTS.CSV`
- `SETTING_CHANGES.LOG`

The following figure shows the content for the `SECURITY_EVENTS.CSV` file:

FORMAT	EVENT_INFO_1	Event Number	Date/Time	Username	IP Address	Role	Category	LogType	Activity Value	Change Method	Event Result
	EVENT_INFO_1	678	Dec 03 2024 17:11:11.644127	Administrator	10.14.21.49	1	Access Control	IEC62351-14	14	5	Role log in
	EVENT_INFO_1	677	Dec 03 2024 17:11:02.746239	Observer	10.14.21.49	0	Access Control	IEC62351-14	15	5	Role log out
	EVENT_INFO_1	676	Dec 03 2024 17:11:01.916899	badusername	10.14.21.49	0	Access Control	IEC62351-14	1	5	Authentication failed
	EVENT_INFO_1	675	Dec 03 2024 17:10:59.701680	Observer	10.14.21.49	0	Access Control	IEC62351-14	14	5	Role log in
	EVENT_INFO_1	674	Dec 03 2024 16:24:57.355598	Observer	10.14.21.49	0	Access Control	IEC62351-14	15	5	Role log out
	EVENT_INFO_1	673	Dec 03 2024 16:24:54.566037	badusername	10.14.21.49	0	Access Control	IEC62351-14	2	5	User lockout
	EVENT_INFO_1	672	Dec 03 2024 16:24:54.266236	badusername	10.14.21.49	0	Access Control	IEC62351-14	1	5	Authentication failed
	EVENT_INFO_1	671	Dec 03 2024 16:24:42.414708	Observer	10.14.21.49	0	Access Control	IEC62351-14	14	5	Role log in
	EVENT_INFO_1	670	Dec 03 2024 16:22:31.602775	Administrator	10.14.21.49	0	Access Control	IEC62351-14	1	5	Authentication failed
	EVENT_INFO_1	669	Dec 03 2024 16:21:46.435157	Observer	10.14.21.49	0	Access Control	IEC62351-14	15	5	Role log out

Figure 442: Security events file

Time — Local time.

Activity — The actual security event.

1 = Authentication Failed
2 = User Lockout
3 = FW Upgrade
4 = FW Lock
5 = Settings Lock
6 = Settings Change, this can fill the entire event log. Hence it is supported by the already existing SETTINGS_CHANGE.LOG file. This event is not required.
7 = Clear Oscillography command
8 = Clear Data Logger command
9 = Clear Demand Records command
10 = Clear Energy command
11 = Reset Unauthorized Access
12 = Clear Teleprotection Counters
13 = Clear All Records
14 = Role Log out

15 = Role Log in
16 = Factory Mode enabled
17 = Factory Mode disabled

Change Method — Format code F229 for the settings control change method.

0 = None
1 = Keypad
2 = Front port
3 = COM1 (not used)
4 = COM2 (RS485)
5 = Ethernet

The `SETTING_CHANGES.LOG` file stores all the setting changes. A total of 1024 events are stored in a circular buffer in volatile memory.

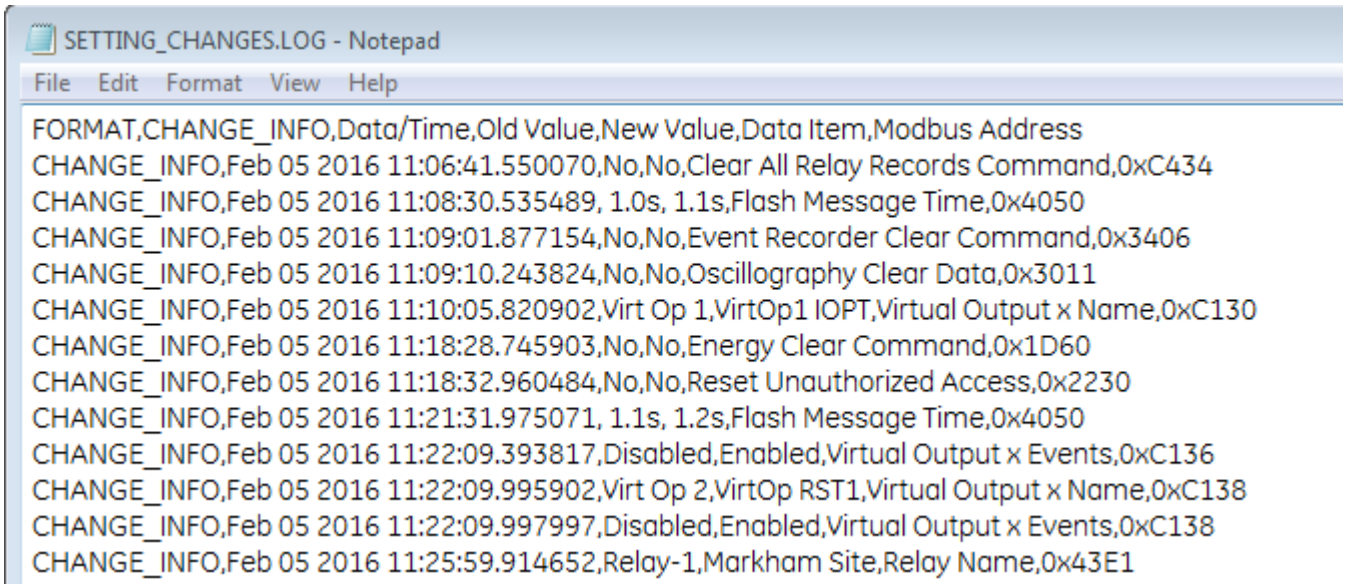

Figure 443: Setting changes file

14.4.3 CONVERT DEVICE SETTINGS

Settings files can be upgraded or downgraded to other firmware versions. For example, version 7.4 settings can be upgraded to version 7.6.

Settings are reset to factory default upon conversion. For a graphical front panel, for example when upgrading from version 7.6 to 7.7, single-line diagrams and cells configured for the Metering Editor are defaulted, while other graphical front panel settings are retained.

When converting a settings file from version 7.20 or earlier to 7.70 or later, any IEC 61850 settings are defaulted, and Edition 2 is used.

When converting a settings file from version since 7.30 inclusive to 7.70 or later, any IEC 61850 settings are converted and Edition 2 is used.

When converting a settings file with IEC 61850 Edition 1 to version 7.80 or later with a non-HardFiber Process Bus Module (order code 85, 86, or 87), conversion does not take place and an error message displays. The Process Bus Module does not support Edition 1.

Conversions between PBM and non-PBM order codes are not permitted.

With version 8.00 and later, when a file is converted between order codes, the logical node prefix names and instance numbers are defaulted and the respective dataset member references are removed.

To convert settings:

1. If not already in the Offline Window area, right-click the online device in the EnerVista software and select the **Add Device to Offline Window** option. This copies the settings to the Offline Window area. Any message about file repair usually means that settings were missing in the original file and have been added with default values to the new file.
2. Make a copy of the settings file in the Offline Window area by right-clicking the file and selecting **Duplicate Device**. A copy of the file is made and the file name start with `Copy of`. Optionally rename the file by right-clicking it and selecting the **Rename Device** option.
3. Convert the settings by right-clicking one of the files in the Offline Window and selecting the **Convert Device Settings** option.

   If the option does not display, click the **Admin > User Management** menu item and enable the **Update Info** check box for the user, then save, or click the **Admin > User Management** menu item and enable the **Enable Security** check box, then save.

   Select the **Admin > User Login** menu item. Enter *`Administrator`* for the user and enter the password. (Contact GE Grid Solutions if you do not know the default password.)

   GE recommends converting settings in firmware steps, for example when converting from 6.0 to 7.4x, convert first to 7.0 then 7.4 in order to follow embedded conversion rules and keep settings.

   The settings convert and a report generates.

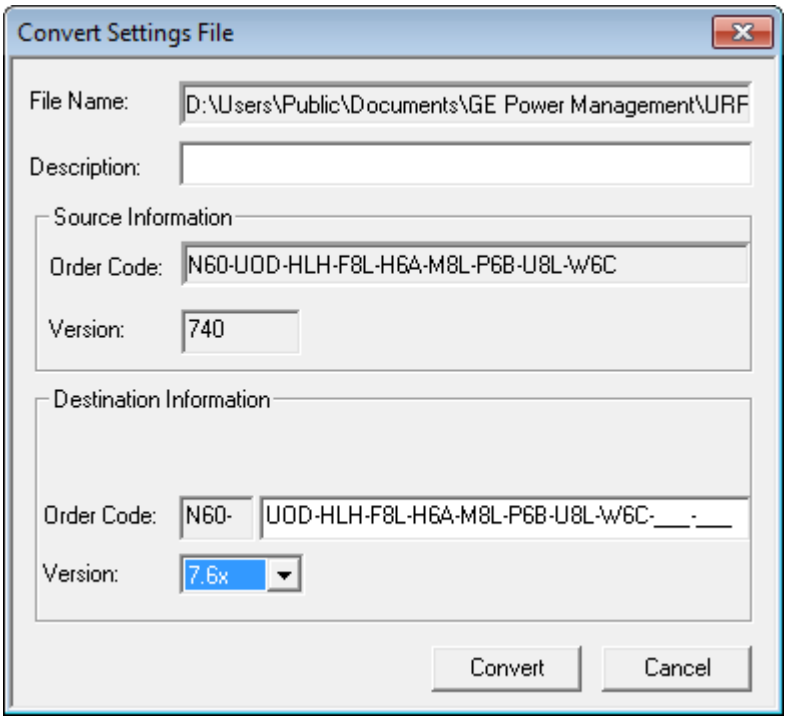

Figure 444: Upgrade settings

4. Review the conversion report. The values of all settings that have been defaulted during conversion are not listed in the conversion report; to find the value of a setting before conversion, inspect the device backup file made before conversion.

   In the example shown here, settings have been reset to factory defaults and several settings are new in firmware version 7.6 under ***Settings > System Setup > Switches*** and ***Breakers***.

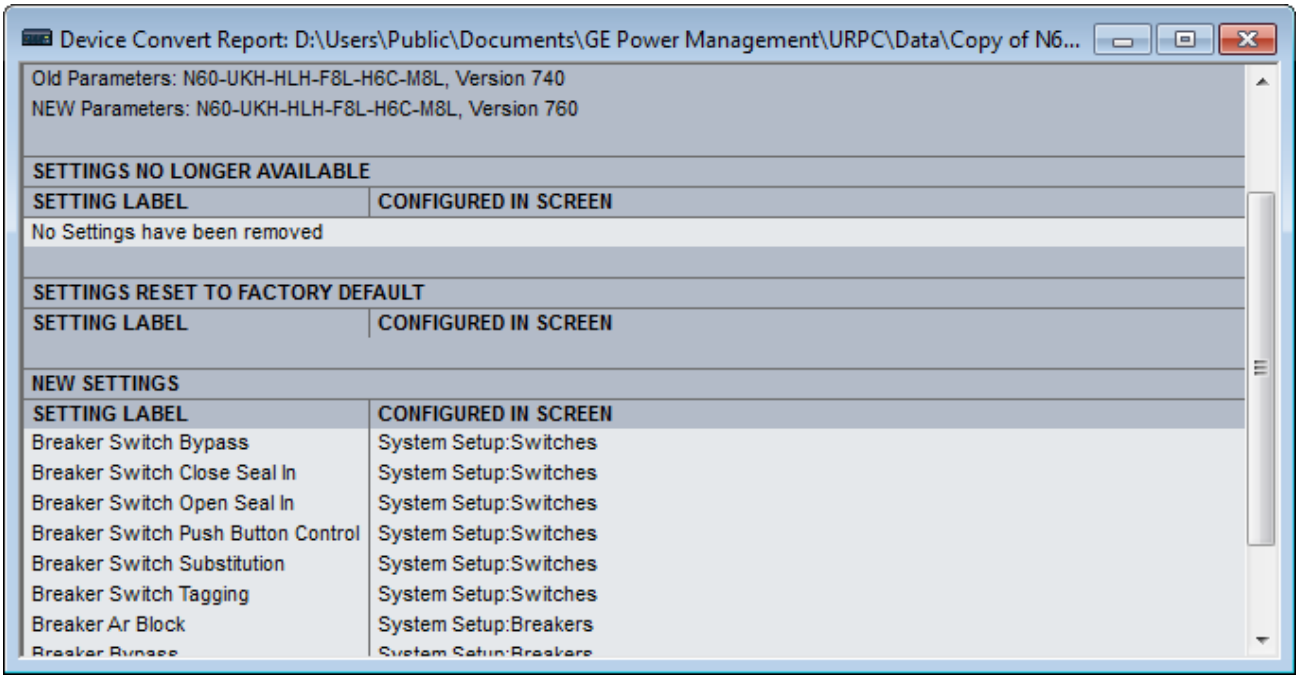

Figure 445: Conversion report

5. Change settings in the new file, for example by looking at the original file.
6. Write the converted file to the device, for example by dragging and dropping from the Offline Window to the Online Window.
7. Check settings and operation.

14.4.4 COPY SETTINGS TO OTHER DEVICE

Settings from one Product device can be copied to another Product device for rapid deployment. The order codes and IEC 61850 edition must match. See the Settings File section at the beginning of the Interfaces chapter for a list of settings not deployed.

1. Right-click the device in the Online window and select the **Add Device to Offline Window** option. A window opens.
2. Check the file path and name the file, then click the **Receive** button. An example is to save the files in `D:\Users\Public\Public Documents\GE Power Management\URPC\Data\` and to name the source device `Product_Deployment`. At the prompt, confirm the action. The settings are saved in `.cid`, `.icd`, and `.urs` files, and the entry displays in the Offline window area.
3. Right-click the device in the Offline window area and select the **Duplicate Device** option. The device is copied with a prefix of `Copy of`.
4. Right-click the copied device and rename it.
5. Right-click the copied device and select the ***Edit Device Properties*** option. Make the changes for the new device.
6. Send the file to new device by dragging and dropping it into the Online Window area. Or right-click and select the **Write Settings to Device** option.
7. Update the remaining settings, such as IP address.

14.4.5 EXPORT SETTINGS

All or specific groups of settings are exportable.

1. Right-click a device in the Offline Window area and select the **Export Settings** option. A window opens. When the **Export All Settings** option is enabled, the individual settings groups are inactive.

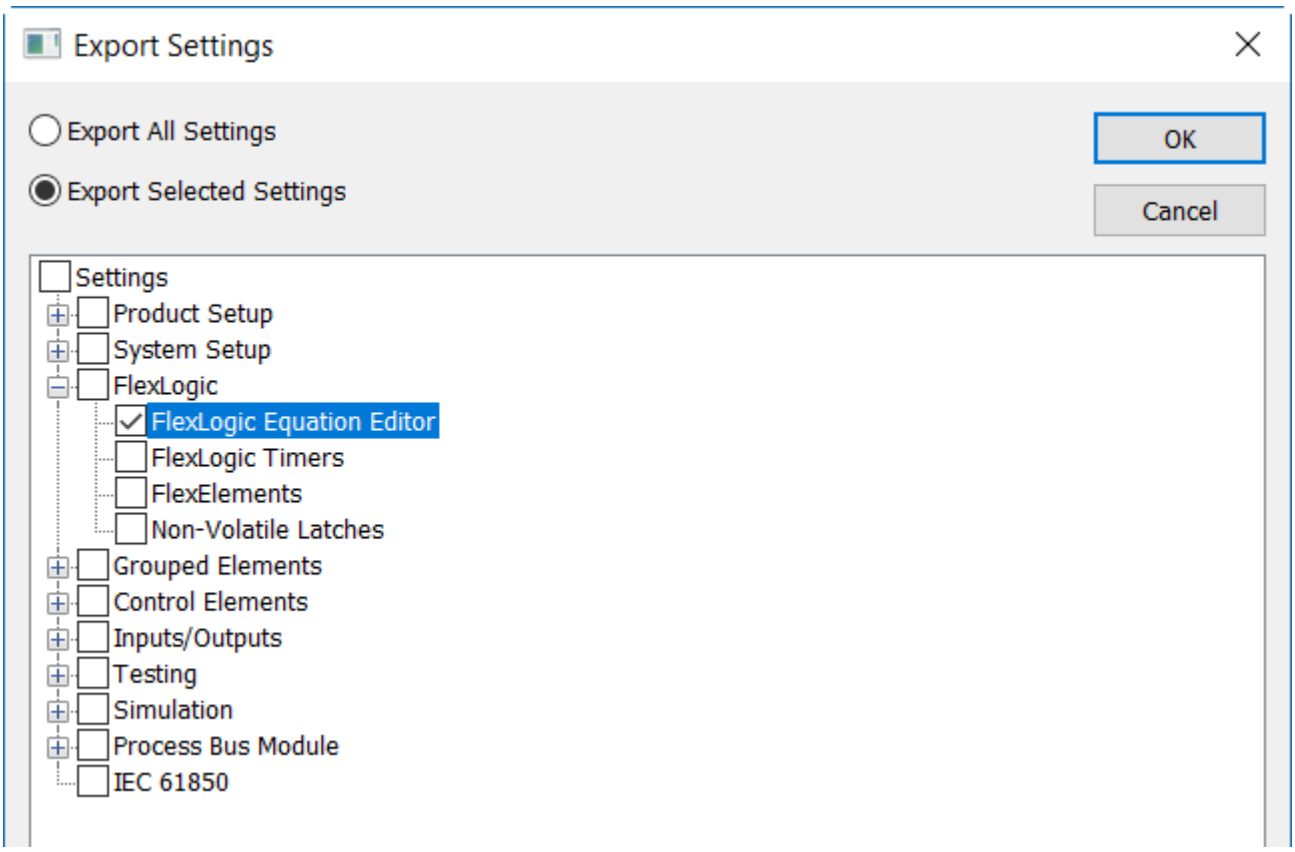

Figure 446: Export settings

2. For groups of settings, enable the **Export Selected Settings** option, then enable the check boxes of the options to export. The example shows that FlexLogic equations are to be exported.
3. Click the **OK** button, and specify a file name in the window that opens. The format is XML. Click the button to start the export, which takes a minute or two.

   If prompted about a file being repaired, review the report. The path to the file displays, and otherwise it sits with the URS, CID, and ICD files of the device with a file name of _Repair_Report.txt, such as B30 81x_Repair_Report.txt. The example shows that some settings were added at default values. The explanation is that the EnerVista software was updated, but the offline file predates the update.

```
This device contains a list of settings that were missing in the original file.
The following settings have been added to this setting file and were set to their default values.

INITIATE TEST MODE ON SIM,L=2039,G=1,M=1,I=1
SIM MODE CTRL VIA IEC 61850,L=3869,G=1,M=1,I=1
SIM MODE INPUT,L=3870,G=1,M=1,I=1
```

Figure 447: Settings report

14.4.6 COMPARE SETTINGS

Settings are comparable against default values and between two UR devices.

Some of the IEC 61850 settings use floating point data, which guarantees accurate representation of real numbers up to seven digits. Numbers with more than seven digits are approximated within a certain precision. This can result in differences between what is entered and what is saved, and for example results in differences shown on a settings comparison report.

When comparing two settings files with the graphical front panel, all graphical front panel features are compared except for the single-line diagrams.

Comparing against defaults

1. Right-click the device in the Offline Window area and select **Compare Settings With Defaults**. The file generates and the number of differences displays.
2. To save the report, click **File > Save As**, select the `TXT`, `PDF`, or `CSV` format from the drop-down list, and enter a name for the file.

   In the figure, the first entry is from the device, while the second is the default value.

```
137,  File1 , Trip Bus Input, 1__1__3, 1 (ON)
138,  File2 , Trip Bus Input, 1__1__3, 0 (OFF)
139,  File1 , Virtual Output Events, 1__64__1, 0 (Disabled)
140,  File2 , Virtual Output Events, 1__64__1, 1 (Enabled)
141,  File1 , Virtual Output Name, 1__64__1, Virt Op 64
142,  File2 , Virtual Output Name, 1__64__1, Osc Trigger
```

Figure 448: Device settings compared with default values

Compare two devices

Preferences are set under **File > Preferences** as follows:

Comparison Report: Sequential File 1, File 2 Layout

When disabled (default), the report shows only what differs, as shown in the previous figure. When enabled, the report indicates differences by device.

```
1,  File2 , Existing 7.40 IEC61850 settings removed., ____, New IEC61850 settings added with default values.
2,  File2 , Bkr Phase A Open, 1__1__1, 0 (OFF)
3,  File2 , Bkr Phase B Open, 1__1__1, 0 (OFF)
4,  File2 , Bkr Phase C Open, 1__1__1, 0 (OFF)
5,  File2 , Breaker Restrike Block, 1__1__1, 0 (OFF)
6,  File2 , Breaker Restrike Block, 1__2__1, 0 (OFF)
7,  File2 , Breaker Restrike Brk Open, 1__1__1, 0 (OFF)
8,  File2 , Breaker Restrike Brk Open, 1__2__1, 0 (OFF)
9,  File2 , Breaker Restrike Cls Cmd, 1__1__1, 0 (OFF)
10,  File2 , Breaker Restrike Cls Cmd, 1__2__1, 0 (OFF)
```

Figure 449: Device settings compared between two devices, displayed sequentially

To compare settings of two devices in the Offline Window area:

1. Right-click a first device in the Offline Window area and select **Compare Two Devices**.
2. In the window that opens, select a second device and click the OK button. The file generates and the number of differences displays.

   Alternatively, in the window that opens, enter a path/file name at the bottom of the window; users can select either a URS or a CID file. When selecting URS files users should be aware that for IEC 61850 order codes the information in a URS data file is incomplete and therefore a comparison with an IEC 61850-enabled device will show many differences.
3. To save the report, click **File > Save As**, select the TXT, PDF, or CSV format from the drop-down list, and enter a name for the file.

To compare settings between Online and Offline devices:

1. Right-click a device in the Online Window area and select **Compare with Device**.
2. In the window that opens, select an offline device and click the OK button. The file generates and the number of differences displays.

Alternatively, in the window that opens, enter a path/file name at the bottom of the window; users can select either a URS or a CID file. When selecting URS files users should be aware that for IEC 61850 order codes the information in a URS data file is incomplete and therefore a comparison with an IEC 61850-enabled device will show many differences.

3. Click the **OK** button. The file generates, and the differences are highlighted in red, which is for the first device.

14.4.7 BACK UP AND RESTORE SETTINGS

Back up a copy of the in-service settings for each commissioned UR device, so as to revert to the commissioned settings after inadvertent, unauthorized, or temporary setting changes are made, after the settings defaulted due to firmware upgrade, or when the device has to be replaced. This section describes how to backup settings to a file and how to use that file to restore the settings to the original relay or to a replacement relay.

For reference, settings can saved with **Online > Print Device Information** and **Online > Export Device Information**. They cannot be restored using these options.

14.4.7.1 BACK UP SETTINGS

The following file types can be saved:

- URS — UR settings file — When the IEC 61850 option is not present
- IID — Instantiated IED capability description file — Actual settings on UR
- ICD — IED Capability Description file — Default settings on UR
- CID — Configured IED description file — Settings sent to the UR (may or may not contain the present settings)

UR device settings can be saved in a backup URS file using the EnerVista UR Setup software. The URS file is the standard UR settings file. For an introduction to settings files in the URS format, see the beginning of the Interfaces chapter.

When the IEC 61850 option is present, the settings can be saved alternatively in a backup IID file either using the EnerVista UR Setup software in online mode or by using any of the supported file transfer protocols. The IID file is one of several IEC 61850 Substation Configuration Language (SCL) file types; see the IEC 61850 chapter in the UR Series Communications Guide for an introduction to SCL.

`TBD` displays when a setting in a modeled element is configured with a non-modeled operand. For example, Phase IOC is modeled in a firmware release, while the LED operands are not modeled. If the block setting of the Phase IOC is configured with LED operands, its displays as TBD in IID and CID files, the web interface, or in an MMS client.

The options that display in the EnerVista software when right-clicking depend on device options.

Preferences are set in the **File > Preferences > IEC 61850** menu. There are two options as follows:

Preserve custom attributes when importing SCD/CID files

This applies to the **Add Device to Offline Window** option. When enabled, the IID file also is to be copied to the computer. The IID file that is retrieved from the relay is therefore assumed to be in synchronization with the resulting .urs file, and in fact in this situation the IID file on the computer is a copy of the IID file that was read from the online device. When disabled, the IID file on the computer is to be left unchanged. The location of the IID file is C:\ProgramData\GE Power Management\urpc\Offline, for example.

Do not update IID file when updating SCL files

When enabled (default), an IID file is not to be created on the computer and if one is already present there, it is neither removed nor updated. Have this option enabled when you want to keep the IID file from the UR device instead of from another tool. The location of the file is `C:\ProgramData\GE Power Management\urpc\Offline`, for example.

An Environment backup stores a list of sites and devices in the Online and Offline Window areas. Settings files are not contained within the environment file. If a settings file is moved, renamed, or deleted after the backup, it is removed from the Offline Window during the restore.

To save a settings file in the URS format in EnerVista Online Window:

1. In EnerVista, connect to the device in the Online Window area.
2. Right-click the device name in the Online Window area and select **Add Device to Offline** Window. A window opens.
3. Select or enter a file name and location, and click the **Receive** button. A `.urs` file is created in the Offline Window area.

To create a new settings file in the URS format in EnerVista Offline Window:

1. In EnerVista, right-click in the Offline Window area and select **New Device**. A window opens.
2. Change the file name at the end of the Path field, keeping the .urs extension.
3. From the **Associate File with Device** drop-down list, select the UR device. Other fields complete automatically. Otherwise, when you do not select a device from the drop-down list, all fields need to be completed manually and only devices that match the entered order code and version display in the list.
4. The **Serial # Lock** field is the serial number of the intended device. It ensures that the settings file is sent only to the specific relay that matches the serial number.
5. Click the **OK** button to create the .urs file in the Offline Window area.

To save settings in the IID format in EnerVista Online Window:

1. In EnerVista, connect to the device in the Online Window area.
2. Right-click the device name in the Online Window area and select **Read IID File**. The option is not present when the device does not have the IEC 61850 option. A window opens when successful.
3. Select or enter a file name and location, and click the **Receive** button. A .iid file is created.

To save settings in the IID format in EnerVista Offline Window:

1. In EnerVista, right-click the device in the Offline Window area.
2. Select the **Create IID File** option for firmware below 7.3. The option is not always available. Select the **Save As** option for firmware 7.3 and later, and select the IID option from drop-down list.

   No file is generated. The IID file on the computer is copied to the location specified.
3. If the **Do not update IID file when updating SCL files** preference is enabled under **File > Preferences > IEC 61850**, then a message displays to that effect. This means that there is no IID file available on the computer to be copied, so a new one is generated.

To save settings in the IID format using TFTP:

1. On a computer on the same subnetwork as the UR device, open a command window.
2. Enter

```
TFTP <IP address> GET ur.iid <destination>
```

where

- <IP address> is the IP address of the UR device
- ur.iid is the internal name of the IID file in the UR device
- <destination> is the path and file name of the IID file. If omitted, the file is saved as ur.iid in the command window default directory.

An example is

```
TFTP 192.168.1.101 GET ur.iid Feeder1.iid
```

To save settings in the ICD format in EnerVista Online Window:

1. In EnerVista, right-click the device in the Online Window area.
2. Select the **Read ICD File** option. A window opens.
3. Enter a path/name for the file, and click the **Save** button.

To save settings in the ICD format in EnerVista Offline Window:

1. In EnerVista, right-click the device in the Offline Window area.
2. Select the **Create ICD File** option. Or select the **Save As** option, and select the ICD option from drop-down list.

   You can be prompted to specify if the file is for firmware version 7.12 or later.

   The file is saved to the location specified.

To save settings in the CID format in EnerVista Online Window:

1. In EnerVista, right-click the device in the Online Window area.
2. Select the **Read ICD File** option. A window opens.
3. Enter a path/name for the file, and click the **Save** button.

To save settings in the CID format in EnerVista Offline Window:

1. In EnerVista, right-click the device in the Offline Window area.
2. Select the **Save As** option, which displays for firmware 7.3 and later, and select the CID option from the drop-down list.

   The file is copied from the computer to the location specified.

To save list of sites and devices with an Environment backup:

In EnerVista, click **File > Environment > Backup**. A window opens.

Name and save the .ENV file.

14.4.7.2 RESTORE SETTINGS

UR device settings can be restored to the values they were at when a URS backup file was created using the EnerVista UR Setup software. When the IEC 61850 option is present, the settings can alternatively be to the values they were at when an IID type backup was created either using the EnerVista UR Setup software in online mode or by using any of the supported file transfer protocols. Note that TFTP cannot be used here, as TFTP `put` mode is disabled for security reasons.

To restore completely, a few settings need to be entered manually either via EnerVista UR Setup or via the UR device front panel. If the restore operation is to be via Ethernet, first the UR device must have its IP address settings entered via the front panel. These are located at ***SETTINGS > PRODUCT SETUP > COMMUNICATIONS > NETWORK 1(3)*** and ***SETTINGS > PRODUCT SETUP > COMMUNICATIONS > IPv4 ROUTE TABLE 1(6) > DEFAULT IPv4 ROUTE ð GATEWAY ADDRESS***.

When importing a file, it cannot have a blank numeric value. All numeric values must be non-blank, otherwise the file is rejected.

URS and IID procedures are outlined here.

To restore settings from a URS file:

1. In EnerVista, connect to the device in the Online Window area.
2. Right-click the .urs file in the Offline Window area and select **Add Device from File** to locate a file, and/or drag-and-drop the file from the Offline Window area to the device in the Online Window area.

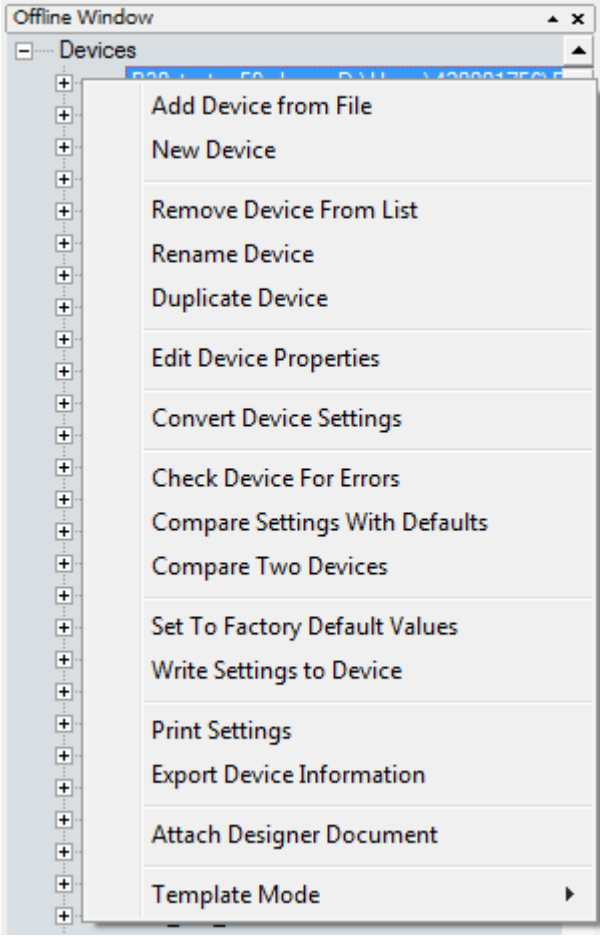

Figure 450: Restoring a URS settings file

3. Two prompts are possible, first that the URS file does not include the complete IEC 61850 configuration and that it needs to be recreated if you continue. This means that the URS file is from UR version 7.30 or higher, has the IEC 61850 software option in the order code, but any IEC 61850 content will be compromised and will need to be configured.

   Second, a message can display that the URS file is part of a device folder and to use the device's CID file. This means that the URS file is from UR version 7.3 or higher, has the IEC 61850 software option in the order code, and is part of the device folder. The user is trying to add a URS file from inside a device's folder. Instead, the user needs to use the CID file from the device folder.

   These messages display because the roles of the protection engineer and network engineer can be separate. The former can require a URS file, while the latter can require stored Modbus settings and protection schemes.
4. Manually copy the remaining settings, outlined as follows.

To restore settings from an IID file using EnerVista software:

1. In Windows, make a copy of the .iid backup file, and change the extension to .cid on the new copy.
2. In the Online Window area of the UR EnerVista Setup software, connect to the device to establish communication.

3. In the Offline Window area, right-click **Devices** and select **Import Devices from SCD**.

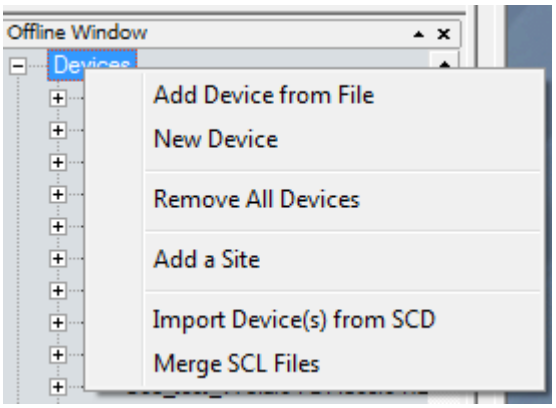

Figure 451: Importing an SCD or CID file

4. Navigate to and select the file with .cid extension. When prompted, enter a file name to give to an intermediate URS file. The URS file is added to the Offline Window area.
5. Drag the imported file in the Offline Window to the device in the Online Window. Note that the RELAY SETTINGS value also is written to a device, and the accepting relay is put into "Programmed" or "Not Programmed" mode as configured in the offline file.
6. Manually copy the remaining settings, outlined as follows.

To restore settings from an IID using SFTP:

1. Verify that transfer by SFTP is enabled under ***SETTINGS > PRODUCT SETUP > COMMUNICATIONS > PROTOCOL > SFTP PROTOCOL***.
2. Close EnerVista UR Setup software.
3. In Windows, make a copy of the .iid backup file, and change the extension to .cid on the new copy.
4. On a computer on the same subnetwork as the UR device, open an SFTP client application, such as WinSCP. Note that TFTP cannot be used here.
5. Use the device's IP address as the host name.
6. If the device has the CyberSentry option, use the User Name of `Administrator` or `Engineer`, and the password programmed for the selected role. The default password is `ChangeMe1#` (without quotation marks). Log in to the device.
7. If the device does not have the CyberSentry option, use the User Name of `Setting`, and the password programmed for the Setting role. The default password is `ChangeMe1#` (without quotation marks). Log in to the device.
8. Upload the backup file copy with the .cid extension. WinSCP uses drag-and-drop or copy-and-paste for this file transfer.
9. Manually copy the remaining settings, outlined as follows.

To manually copy remaining settings:

1. Settings files are not transferred to the UR device with settings files. Enter them manually either via the front panel or via EnerVista UR Setup software. The values that these settings had at the time the backup was created are contained within the backup file, accessed through EnerVista UR Setup software.

To restore the list of sites and devices from an Environment backup:

1. In EnerVista, click **File > Environment > Restore**. A window opens.
2. Select the .ENV file to restore.

14.4.8 UPGRADE SOFTWARE

EnerVista can be used with all firmware versions. For example, EnerVista software released for UR 8.2 can be used to access multiple UR devices that have version 8.2x, 7.4x, and 6.0x firmware installed.

Existing installations do not need to be uninstalled before upgrade.

You can also downgrade the software; use the same procedure. A product can be downgraded as far as its first release.

Silent installation also is possible.

To upgrade the EnerVista software:

1. If a beta version of the EnerVista UR Setup software is installed, uninstall it.
2. Disconnect any USB cables to ensure correct USB driver installation.
3. Download the latest EnerVista software.
4. Double-click the file and complete the wizard. The software installs.
5. Access the software.

   The prompt `Do you want to create device folders for all your pre-existing off line devices` determines the folder structure on the computer. Clicking **Yes** means that CID, ICD, and URS files are to be grouped together in a folder, and the URS file is also one level above. Clicking **No** leaves folder structure unchanged.
6. Check the version number under **Help > About**. If the new version does not display, try uninstalling the software and reinstalling the new version.
7. For Windows 10, to finish installing the UR USB driver, open **Device Manager > Ports**, then plug in the USB cable (to connect the relay and computer). A new port starting with "GE Virtual Serial Port" is available. If available, click the **OK** button to complete the installation.

   If not available, uninstall the existing GE USB driver in the **Device Manager > Ports**. (Right-click and **Uninstall**)

   When complete, unplug and re-plug the USB cable connecting the UR device. The **GE Virtual Serial Port** driver is now available.

   A message can display about a version not being supported. An example is when upgrading from version 7.12K to 7.4x. The 7.12K entry is removed from the Offline Window area.

   A message can display in the EnerVista software upon launch that `a device from the environment was not recognized`. This means that a device is online and its firmware version conflicts with the software version. In the example shown, a C60 with firmware version 7.5x is online, but the software version is 7.3x. Updating removed incompatible files and changed the device to version 7.3x, after which you need to make the order codes consistent as outlined next.

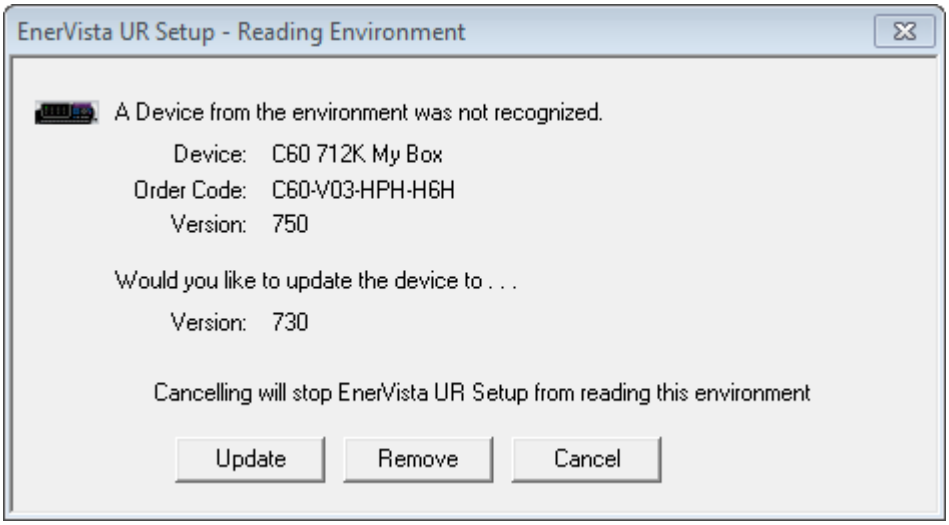

Figure 452: Mismatch in order code between software and device

To make the order codes consistent:

1. In EnerVista, click the **Device Setup** button. The window opens.
2. Expand the entry for the UR device.
3. Click the **Read Order Code** button. The order code and version of the device are populated to the software.
4. Click the **OK** button to save the change.

The silent installation is not truly silent because it invokes the user interface. The installation is silent at step 5. Double-clicking on the .exe file for installation is faster.

To install the software silently:

1. Uninstall any existing EnerVista UR Setup software.
2. In a command line window, run the executable file, such as entering `URPC810.exe -r`
3. Follow the prompts to install the software using the wizard. The action creates a setup.iss file in the `C:\WINNT, C:\Windows\Setup`, or other folder that records user inputs.
4. Copy the .exe and .iss files to the same folder.
5. In a command line window, enter `URPC850.exe /S /v/qn`, where `URPC810.exe` is the executable file name. The software installs and generates a setup.log file in the same folder. A result code of "0" at the end the log file means that the installation succeeded.

14.4.9 UPGRADE FIRMWARE

> *Note:*
> *If upgrading both firmware and EnerVista software, upgrade the software first.*

The firmware of the Product device can be upgraded locally or remotely, using the EnerVista software.

Upgrades are possible for the same release (such as 8.01 to 8.02) and from one firmware version to another (such as 7.2 to 7.3). When upgrading to another firmware version, check the release notes on the GE Vernova website for compatibility.

If you are upgrading from version 7.0 or 7.1 to 7.2 or later, some CPU modules require a new boot version. Update this first.

Address any equipment mismatch error before upgrade. For example, if you have a basic front panel attached and the order code in the device is for a graphical front panel, the upgrade only works with a graphical front panel.

You can also downgrade firmware; use the same procedure. A Product is downgradeable as far as its first release.

Upgrading the firmware takes the relay out of service. At the end of the upgrade, the relay restores the “In Service” state that existed before the upgrade.

Any DSP manufactured between 1 January 2013 and 1 December 2015 with versions 7.27, 7.28, or 7.60 and up must be sent back to the factory for updates before updating the firmware.

To upgrade the firmware using EnerVista software:

1. Download the bootcode file and/or firmware from http://www.gegridsolutions.com/app/ViewFiles.aspx?prod=urfamily&type=7. The firmware is a .SFD file. The boot file is a .000 file. Bootcode files 7.03 and later are for CPUs T, U, V, or W, which have 9T, 9U, 9V, or 9W on the label.
2. For a relay without the CyberSentry software option, navigate to **Settings > Product Setup > Security** and ensure that the Remote Setting Authorized and Local Setting Authorized settings are ON. On the front panel of the device, the path is **SETTINGS > PRODUCT SETUP > SECURITY > DUAL PERMISSION SECURITY ACCESS.**
3. For a relay with CyberSentry Lvl 1 software option, navigate to **Settings > Product Setup > Security > Access Supervision** or **Settings > Product Setup > Security > Supervisory** and disable the ***Lock Firmware*** setting. To change this setting, the Supervisor role is required, or the Administrator role if the Supervisor role is not used.
4. In EnerVista, back up the device settings by right-clicking the device and selecting **Add Device to Offline Window**. In the window that displays, select an existing file to overwrite, or enter a name for a new settings file and optionally a location for the new file. Click the **Receive** button to start the backup. If an `Incompatible device order codes or versions` message displays, it means that you are trying to overwrite a file for another product. You access the **Convert Device Settings** option by right-clicking the file in the Offline Window area at the lower left. GE recommends converting settings in firmware steps, for example when converting from 6.0 to 7.4x, convert first to 7.0 then 7.4 in order to follow embedded conversion rules and keep settings. Note that the values of all settings that have been defaulted during conversion are not listed in the conversion report; to find the value of a setting before conversion, inspect the device backups made before conversion.
5. In EnerVista, navigate to **Maintenance > Update Firmware**. First select the boot file, if applicable, locating the .000 file, and proceed with the update. Note that settings are not lost during this update. When done, the relay restarts automatically; continue with the next step.

Note:
When updating the boot file, ensure that power is not lost, else the relay must be returned to the factory for repair.

To update the firmware, select the firmware update by locating the .SFD file, and proceed with the update.

EnerVista software only enables users to upgrade the firmware in the relay after validating the source of the SFD file and its authenticity, by verifying the digital signature included in the file before sending it to the relay. If the digital signature validation fails, the firmware upgrade process is aborted. If the digital signature validation succeeds, EnerVista proceeds with the firmware upgrade. The relay records the outcome of the signature validation in the security events.

When asked if upgrading over the Internet, the difference is the flash memory buffer size each time the software sends data to the relay. Yes means that the flash memory buffer size is 256 bytes. No means that it is 1024 bytes, which is faster.

If a warning message displays about the firmware not being supported by the EnerVista software, it means that the firmware is a later version than the software. Upgrade the software to the same or later version as the firmware, then try again.

If an `Unable to put relay in flash mode` message displays, set the **Settings > Product Setup > Security > Dual Permission Security Access > Remote Setting Authorized** and **Local Setting Authorized** settings to ON and try again.

When the update is finished, the relay restarts automatically. The upgrade process takes about 20 minutes when using a graphical front panel because of writing to the front panel.

6. Restart the EnerVista software, and refresh the order code in EnerVista under the **Device Setup** button.
7. Verify the boot and firmware version while the device is starting up or in EnerVista under **Actual Values > Product Info > Firmware Revisions**. The **Revision** is the firmware version, for example, revision 8.20 is UR firmware release 8.20. The Boot Program Revision is the bootloader release.

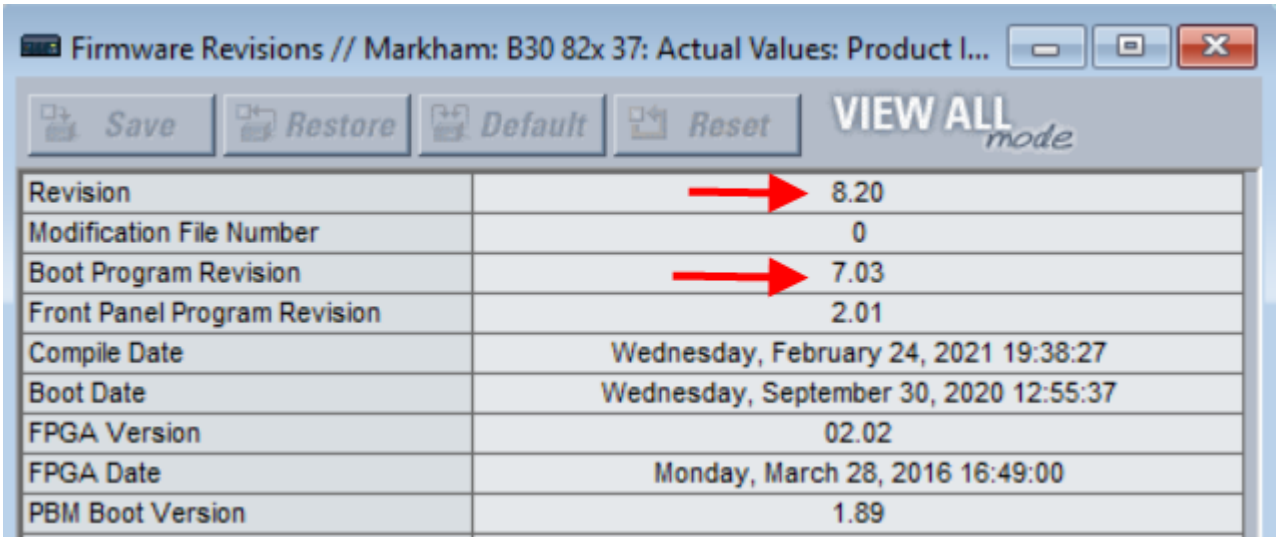

Figure 453: Check upgrades

8. Set the device to `programmed` under **Settings > Product Setup > Installation**. A self-test error displays on the device until this is done.
9. If you changed the ***Remote Setting Authorized***, the ***Local Setting Authorized*** settings, or relay lock settings, return them to their previous settings.
10. If you changed the ***Lock Firmware*** setting, enable it again.
11. To apply any previously saved settings, right-click the saved settings file in the Offline Window area and select **Write to Device**. Optionally convert the saved settings to the new firmware version before writing to the device by right-clicking and selecting **Convert Device Settings**.

> *Note:*
> *The field-programmable gate array (FPGA) can be upgraded under **Maintenance > Update FPGA** when the device is connected via serial cable and the firmware revision is 7.0 or higher.*

Modbus addresses assigned to firmware modules, features, settings, and corresponding data items (that is, default values, minimum/maximum values, data type, and item size) can change slightly from version to version of firmware. The addresses are rearranged when new features are added or existing features are enhanced or modified. The EEPROM DATA ERROR message displayed after upgrading/downgrading the firmware is a resettable, self-test message intended to inform users that the Modbus addresses have changed with the upgraded firmware. This message does not signal any problems when appearing after firmware upgrades.

14.4.10 UNINSTALL AND CLEAR FILES AND DATA

The unit can be decommissioned by turning off power to the unit and disconnecting the wires to it.

To clear files and settings in the UR:

1. On the UR front panel, navigate to ***COMMANDS > RELAY MAINTENANCE > SERVICE COMMAND***, enter the value 20511, and press the **ENTER** key. The relay restarts and clears the UR.
2. Clear the flash memory using the ***SETTINGS > PRODUCT SETUP > CLEAR RELAY RECORDS*** command.

To clear files and settings on the computer:

1. Uninstall the EnerVista UR Setup software.
2. Find and delete the following UR files:
    - .URS, .CID, and .ICD settings
    - .EVT event records
    - .CFG and .DAT COMTRADE

14.5 REPLACE MODULE

Warning:
Withdraw or insert a module only when control power has been removed from the unit, and be sure to insert only the correct module type into a slot, else personal injury, damage to the unit or connected equipment, or undesired operation can result.

Note:
To avoid damage to the equipment, use proper electrostatic discharge protection (for example, a static strap) when coming in contact with modules while the relay is energized.

The relay, being modular in design, allows for the withdrawal and insertion of modules. Replace modules only with like modules in their original factory configured slots.

Two procedures follow: replace a module with the same module, and upgrade a module.

To replace a module with the same module:

1. Open the enhanced front panel to the left once the thumb screw has been removed. This allows for easy access of the modules for withdrawal. The new wide-angle hinge assembly in the enhanced front panel opens completely and allows easy access to all modules in the Product.

Figure 454: Modules inside relay with front cover open (enhanced front panel)

The basic front panel can be opened to the left once the black plastic sliding latch on the right side has been pushed up, as shown below.

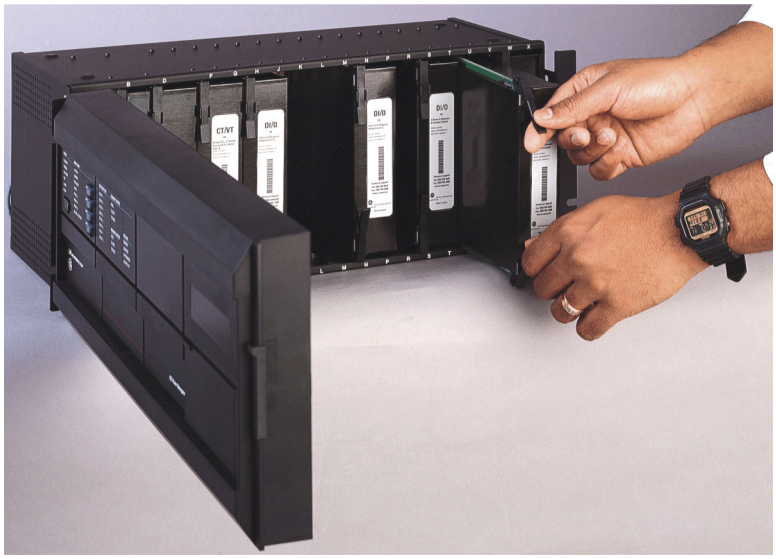

842760A1.CDR

Figure 455: Removing module (basic front panel)

2. With power to the unit off, disconnect individually the connections at the front and back of the module before removing the module from the chassis. For any Process Bus Module in slot H for use with a HardFiber Brick, also remove the two screws at the back that attach the module to the chassis.
3. To properly remove a module, pull simultaneously the ejector/inserter clips, located at the top and bottom of the module.
4. Record the original location of the module to ensure that the same or replacement module is inserted into the correct slot. While modules with current input provide automatic shorting of external CT circuits, for CT/VT modules it is recommended to short/isolate external circuits accordingly for maximum safety.
5. To properly insert a module, ensure that the correct module type is inserted into the correct slot position. The ejector/inserter clips located at the top and at the bottom of each module must be in the disengaged position as the module is smoothly inserted into the slot. Once the clips have cleared the raised edge of the chassis, engage the clips simultaneously. When the clips have locked into position, the module is fully inserted.

Note:
When adding a module (versus replacing a module), check that settings have not changed. Depending on the module, settings can reset to default values.

Note:
For applicable models, the new CT/VT modules can only be used with new CPUs; similarly, old CT/VT modules can only be used with old CPUs. In the event that there is a mismatch between the CPU and CT/VT module, the relay does not function and a DSP ERROR or HARDWARE MISMATCH error displays.

An upgrade example is replacing the CPU module with a more recent one, such as swapping 9G/9H/9N with 9T/9U/9V/9W. A power supply module upgrade does not affect an order code.

To upgrade a module:

1. Back up settings by sending the device to the Offline Window area. C
2. Convert the settings to the new order code by right-clicking in the Offline Window area.
3. Replace the module as outlined in the previous procedure.

4. In the Online Window area, reset all settings to factory defaults and read the new order code from the device using ***Commands > Relay Maintenance > Update Order Code***.
5. Send the saved settings from the Offline Window area to the online device.
6. Refresh the order code in the **Device Setup** window and set the device to "`Programmed`" under ***Settings > Product Setup > Installation***.

14.6 BATTERY

For the SH and SL models and earlier, a battery provides backup power for the real-time clock. The TH and TL models do not contain a battery, they use a supercapacitor to provide backup power for the relay's real time clock.

For the SH and SL models, the battery can be replaced when required. The battery type is 3 V cylindrical. Lithium metal primary (non-rechargeable) batteries, Panasonic BR-2/3A or Varta CR-2/3A. Due to shipping restrictions GE no longer sells replacement batteries, but they can be purchased through retail vendors such as Digikey.

Note:
GE Vernova reserves the right to replace the current battery for an equivalent model and/or vendor

For the TH and TL models, no maintenance is required.

Note:
The power supply modules were upgraded in in the past from RH/RL to SH/SL. However, the order code when purchasing a UR with redundant power supply remained as RH/RL so that customers can continue to use the same order codes. The order code can read RH or RL, while the module inside the unit reads SH, SL, TH, or TL. The order code remains RH for power supplies RH/SH/TH and RL for power supplies RL/SL/TL.

This does not apply to replacement modules. The order code for replacement redundant power supply modules is SH, SL, TH, or TL.

14.6.1 REPLACE BATTERY

Depending on the type, the power supply module may contain a battery. If applicable and when required, the battery can be replaced. If you need to replace the battery, follow the instructions below.

Warning:
To avoid injury, ensure that the unit has been powered off for a minimum of three minutes before replacing the battery.

Warning:
There is a risk of fire if the battery is replaced with an incorrect type or polarity.

1. Turn off the power to the unit.
2. Wait a minimum of three minutes to ensure that there is no power to the battery.
3. Open the unit by sliding up the plastic latch on the right side of the front panel (basic front panel) or unscrewing the panel (enhanced front panel).
4. For the basic front panel, it needs to be removed in order to access the power supply module, which is typically in the first slot on the left side and blocked by the hinge of the front panel. To remove the front panel, unscrew the bracket on the left side of the unit.
5. Remove the power supply module by simultaneously pulling the ejector clips at the top and bottom of the module and sliding it out.
6. Unscrew all <u>four</u> screws that attach the metal cover to the module. The fourth screw is at the back end of the module, on the opposite side from the clips, beside the white electronics part (see figure).
7. Slide the metal cover away from the clips about 0.5 cm (1/8 inch) and remove the cover.
8. Unclip the black plastic holder that keeps the battery in place. The plastic clips into the socket at the bottom on both sides.

9. Pull the plastic away from the battery. Use a flat-head screwdriver if you cannot unclip the plastic with your fingers.
10. Replace the battery with the identical make and model. Observe the + and - polarity of the battery and replace it with the same polarity as marked on the battery holder.

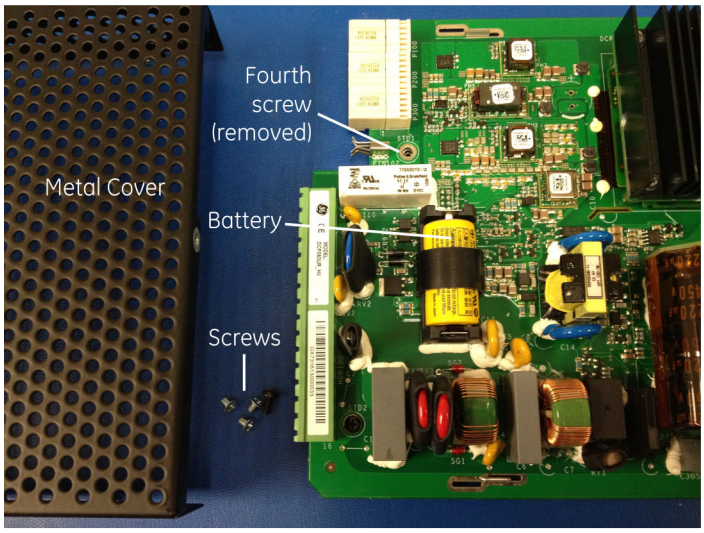

859717A1.cdr

Figure 456: Battery location on power supply module

11. Reinstall the battery holder and the metal cover, and reinsert the power supply module into the unit.
12. Power on the unit.

14.6.2 DISPOSE OF BATTERY

This product may contain a battery that cannot be disposed of as unsorted municipal waste in the European Union. See the product documentation for specific battery information. The battery is marked with this symbol, which may include lettering to indicate cadmium (Cd), lead (Pb), or mercury (Hg). For proper recycling return the battery to your supplier or to a designated collection point. For more information see: www.recyclethis.info.

14.7 REPAIRS

The battery and modules inside the case can be replaced without return of the device to the factory. The firmware and software can be upgraded without return of the device to the factory.

Fuses in the power supply module are not field-replaceable.

Files can be requested for use by technical support staff, for example the Service Report or under ***Maintenance > Retrieve File***, as outlined elsewhere in this document.

For issues not solved by troubleshooting, the process to return the device to the factory for repair is as follows:

1. Contact a GE Vernova Technical Support Center. Contact information is found in the first chapter.
2. Obtain a Return Materials Authorization (RMA) number from the Technical Support Center.
3. Verify that the RMA and Commercial Invoice received have the correct information.
4. Tightly pack the unit in a box with bubble wrap, foam material, or styrofoam inserts or packaging peanuts to cushion the item(s). You may also use double boxing whereby you place the box in a larger box that contains at least 5 cm of cushioning material.
5. Ship the unit by courier or freight forwarder, along with the Commercial Invoice and RMA, to the factory.

   GE Vernova

   650 MARKLAND STREET

   MARKHAM, ONTARIO

   CANADA L6C 0M1

   ATTN: SERVICE DEPT.

   RMA# : _____

Customers are responsible for shipping costs to the factory, regardless of whether the unit is under warranty.

Use the detailed return procedure outlined at

https://www.gevernova.com/grid-solutions/return-procedures

The current warranty and return information are outlined at:

https://www.gevernova.com/grid-solutions/multilin/warranty

14.8 STORAGE AND DISPOSAL

Store the unit indoors in a cool, dry place. If possible, store in the original packaging. Follow the storage temperature range outlined in the Specifications.

Note:
To avoid deterioration of electrolytic capacitors, power up units that are stored in a de-energized state once per year, for one hour continuously.

Other than the battery, there are no special requirements for disposal of the unit at the end its service life. For customers located in the European Union, dispose of the battery as outlined earlier. To prevent non-intended use of the unit, remove the modules as outlined earlier, dismantle the unit, and recycle the metal when possible. See the UR Family Recycling and Disposal Instructions (GET-20096).

CHAPTER 15

APPENDICES

15.1 ABBREVIATIONS

Abbreviation	Meaning
A	Ampere
AC	Alternating Current
A/D	Analog to Digital
AE	Accidental Energization, Application Entity
AMP	Ampere
ANG	Angle
ANSI	American National Standards Institute
APDU	Application Protocol Data Unit
AR	Automatic Reclosure
ARP	Address Resolution Protocol
ASDU	Application-layer Service Data Unit
ASYM	Asymmetry
AUTO	Automatic
AUX	Auxiliary
AVG	Average
AWG	American Wire Gauge
BCD	Binary-Coded Decimal
BCS	Best Clock Selector
BER	Bit Error Rate
BF	Breaker Fail
BFI	Breaker Failure Initiate
BKR	Breaker
BLK	Block
BLKG	Blocking
BNC	Bayonet Neill-Concelman
BPNT	Breakpoint of a characteristic
BRKR	Breaker
CA	Certificate Authority
CAP	Capacitor
CC	Coupling Capacitor
CCVT	Coupling Capacitor Voltage Transformer
CFG	Configure / Configurable
.CFG	Filename extension for oscillography files
CHK	Check
CHNL	Channel
CID	Configured IED Description
CLS	Close
CLSD	Closed
CMND	Command

Abbreviation	Meaning
CMPRSN	Comparison
CO	Contact Output
COM	Communication
COMM	Communications
COMP	Compensated, Comparison
ConfRev	Configuration Revision
CONN	Connection
CONT	Continuous, Contact
CO-ORD	Coordination
CPU	Central Processing Unit
CRC	Cyclic Redundancy Code/Check
CRL	Certificate Revocation List
CRT, CRNT	Current
CSA	Canadian Standards Association
CT	Current Transformer
CVT	Capacitive Voltage Transformer
D/A	Digital to Analog
DA	Data Attribute
DANH	Doubly Attached Node with HSR
DANP	Doubly Attached Node with DANP
DC (dc)	Direct Current
DCE	Data Communications Equipment
DCS	Distributed Control System
DD	Disturbance Detector
DFLT	Default
DGNST	Diagnostics
DIFF	Differential
DIR	Directional
DISCREP	Discrepancy
DIST	Distance
DMD	Demand
DNP	Distributed Network Protocol
DPO	Dropout
DPS	Double-Point Status
DSP	Digital Signal Processor
DST	Daylight Savings Time
dt	Rate of Change
DTT	Direct Transfer Trip
DUTT	Direct Under-reaching Transfer Trip
EAD	Expert Arc Detector
EGD	Ethernet Global Data

Abbreviation	Meaning
ENCRMNT	Encroachment
EPRI	Electric Power Research Institute
.EVT	Filename extension for event recorder files
EXT	Extension, External
F	Field
FAIL	Failure
FCDA	Functional Constraint Data Attributes
FD	Fault Detector
FDH	Fault Detector high-set
FDL	Fault Detector low-set
FIR	Finite Impulse Response
FLA	Full Load Current
FO	Fiber Optic
FPGA	Field-programmable Gate Array
FREQ	Frequency
FSK	Frequency-Shift Keying
FTP	File Transfer Protocol
FxE	FlexElement™
FWD	Forward
G	Generator
GCM	Galois Counter Mode
GDOI	Group Domain of Interpretation
GFP	Graphical Front Panel
GIS	Gas Insulated Switchgear
GND	Ground
GNTR	Generator
GoCB	GOOSE Control Block
GOOSE	General Object Oriented Substation Event
GPS	Global Positioning System
GSU	Generator Step-Up
HARM	Harmonic / Harmonics
HCT	High Current Time
HGF	High-Impedance Ground Fault (CT)
HIZ	High-Impedance and Arcing Ground
HMI	Human-Machine Interface
HSR	High-availability Seamless Redundancy
HTTP	Hyper Text Transfer Protocol
HV	High Voltage
HYB	Hybrid
Hz	Hertz

Abbreviation	Meaning
I	Instantaneous
I_0	Zero Sequence current
I_1	Positive Sequence current
I_2	Negative Sequence current
IA	Phase A current
IAB	Phase A minus B current
IB	Phase B current
IBC	Phase B minus C current
IC	Phase C current
ICA	Phase C minus A current
ICD	IED Capability Description
ID	Identification
IED	Intelligent Electronic Device
IEC	International Electrotechnical Commission
IEEE	Institute of Electrical and Electronic Engineers
IG	Ground (not residual) current
Igd	Differential Ground current
IGMP	Internet Group Management Protocol
IID	Instantiated IED Capability Description
IN	CT Residual Current (3I0) or Input
INC SEQ	Incomplete Sequence
INIT	Initiate
INST	Instantaneous
INV	Inverse
I/O	Input/Output
IOC	Instantaneous Overcurrent
IOV	Instantaneous Overvoltage
IRC	Inter-Relay Communication
IRIG	Inter-Range Instrumentation Group
ISO	International Standards Organization
IUV	Instantaneous Undervoltage
K0	Zero Sequence Current Compensation
kA	kiloAmpere
KDC	Key Distribution Center
kV	kiloVolt
LCD	Liquid Crystal Display
LDBN	Bias Neutral Level Detector
LED	Light Emitting Diode
LEO	Line End Open
LFT BLD	Left Blinder

Abbreviation	Meaning
LOOP	Loopback
LPU	Line Pickup
LRA	Locked-Rotor Current
LTC	Load Tap-Changer
LV	Low Voltage
M	Machine
M2M	Machine to Machine
mA	MilliAmpere
MAG	Magnitude
MAN	Manual / Manually
MAX	Maximum
Mb	Megabit
MIC	Model Implementation Conformance
MIN	Minimum, Minutes
MMI	Man Machine Interface
MMS	Manufacturing Message Specification
MRT	Minimum Response Time
MSG	Message
MTA	Maximum Torque Angle
MTR	Motor
MU	Merging Unit
MVA	MegaVolt-Ampere (total 3-phase)
MVA_A	MegaVolt-Ampere (phase A)
MVA_B	MegaVolt-Ampere (phase B)
MVA_C	MegaVolt-Ampere (phase C)
MVAR	MegaVar (total 3-phase)
MVAR_A	MegaVar (phase A)
MVAR_B	MegaVar (phase B)
MVAR_C	MegaVar (phase C)
MVARH	MegaVar-Hour
MW	MegaWatt (total 3-phase)
MW_A	MegaWatt (phase A)
MW_B	MegaWatt (phase B)
MW_C	MegaWatt (phase C)
MWH	MegaWatt-Hour
N	Neutral
N/A, n/a	Not Applicable
NCIT	Non-conventional instrument transformer
NEG	Negative
NMPLT	Nameplate
NOM	Nominal

Abbreviation	Meaning
NTR	Neutral
O	Over
OC, O/C	Overcurrent
OCSP	Online Certificate Status Protocol
OF	Overload Factor
O/P, Op	Output
OP	Operate
OPER	Operate
OPERATG	Operating
O/S	Operating System
OSI	Open Systems Interconnect
OSB	Out-of-Step Blocking
OUT	Output
OV	Overvoltage
OVERFREQ	Overfrequency
OVLD	Overload
P	Phase
PB	Process Bus
PBM	Process Bus Module
PC	Phase Comparison, Personal Computer
PCNT	Percent
PF	Power Factor (total 3-phase)
PF_A	Power Factor (phase A)
PF_B	Power Factor (phase B)
PF_C	Power Factor (phase C)
PFLL	Phase and Frequency Lock Loop
PHS	Phase
PICS	Protocol Implementation & Conformance Statement
PKI	Public Key Infrastructure
PKP	Pickup
PLC	Power Line Carrier
POS	Positive
POTT	Permissive Over-reaching Transfer Trip
PP	Power Profile
PPP	Point-to-Point
PPS	Pulse per Second
PRESS	Pressure
PRI	Primary
PROT	Protection
PRP	Parallel Redundancy Protocol
PSEL	Presentation Selector

Abbreviation	Meaning
PTP	Precision Time Protocol
pu	Per Unit
PUIB	Pickup Current Block
PUIT	Pickup Current Trip
PUSHBTN	Pushbutton
PUTT	Permissive Under-reaching Transfer Trip
PWM	Pulse Width Modulated
PWR	Power
QUAD	Quadrilateral
R	Rate, Reverse
RA	Registration Authority
RCA	Reach Characteristic Angle
RedBox	Redundancy Box
REF	Reference
REM	Remote
REV	Reverse
R-GOOSE	Routable GOOSE
RI	Reclose Initiate
RIP	Reclose In Progress
RGT BLD	Right Blinder
RMA	Return Materials Authorization
RMS	Root Mean Square
ROCOF	Rate of Change of Frequency
ROD	Remote Open Detector
RRTD	Remote Resistance Temperature Detector
RST	Reset
RSTR	Restrained
RTD	Resistance Temperature Detector
RTU	Remote Terminal Unit
RX (Rx)	Receive, Receiver
s	second
S	Sensitive
SAN	Singly Attached Node
SAT	CT Saturation
SBO	Select Before Operate
SCADA	Supervisory Control and Data Acquisition
SCC	Serial Communication Controller
SCD	System Configuration Description
SCL	Substation Configuration Language
SCEP	Simple Certificate Enrollment Protocol

Abbreviation	Meaning
SEC	Secondary
SEL	Select / Selector / Selection
SENS	Sensitive
SEQ	Sequence
SFTP	Secure Shell (SSH) File Transfer Protocol, Secure File Transfer Protocol
SIR	Source Impedance Ratio
SmpSynch	Samples Synchronized
SNTP	Simple Network Time Protocol
SRC	Source
SSB	Single Side Band
SSEL	Session Selector
STATS	Statistics
SUPN	Supervision
SUPV	Supervise / Supervision
SV	Supervision, Service, Sampled Value
SYNC	Synchrocheck
SYNCHCHK	Synchrocheck
T	Time, transformer
TC	Thermal Capacity
TCP	Transmission Control Protocol
TCU	Thermal Capacity Used
TD MULT	Time Dial Multiplier
TEMP	Temperature
TFTP	Trivial File Transfer Protocol
TGFD	Transient Ground Fault Detection
THD	Total Harmonic Distortion
TMR	Timer
TOC	Time Overcurrent
TOV	Time Overvoltage
TRANS	Transient
TRANSF	Transfer
TSEL	Transport Selector
TUC	Time Undercurrent
TUV	Time Undervoltage
TX (Tx)	Transmit, Transmitter
U	Under
UC	Undercurrent
UCA	Utility Communications Architecture
UDP	User Datagram Protocol
UL	Underwriters Laboratories
UNBAL	Unbalance

Abbreviation	Meaning
UR	Universal Relay
URC	Universal Recloser Control
.URS	Filename extension for settings files
UV	Undervoltage
V/Hz	Volts per hertz
V_0	Zero Sequence voltage
V_1	Positive Sequence voltage
V_2	Negative Sequence voltage
VA	Phase A voltage
VAB	Phase A to B voltage
VAG	Phase A to Ground voltage
VARH	Var-hour voltage
VB	Phase B voltage
VBA	Phase B to A voltage
VBG	Phase B to Ground voltage
VC	Phase C voltage
VCA	Phase C to A voltage
VCG	Phase C to Ground voltage
VF	Variable Frequency
VIBR	Vibration
VT	Voltage Transformer
VTFF	Voltage Transformer Fuse Failure
VTLOS	Voltage Transformer Loss Of Signal
WDG	Winding
WH	Watt-hour
w/ opt	With Option
WGS	World Geodetic System
WRT	With Respect To
X	Reactance
XDUCER	Transducer
XFMR	Transformer
Z	Impedance, Zone

15.2 FLEXLOGIC OPERANDS

FlexLogic operands are digital parameters used to help design scheme logic.

The data items are kept in files attached to this PDF. Depending on the file type, the files may be opened using Microsoft Excel, or free web-based software such as Google Sheets, or PDF viewer capable of opening attachments, such as Adobe Acrobat Reader or Nitro PDF.

Please note that this manual must be opened with a PDF viewer capable of opening attachments, such as Adobe Acrobat Reader or Nitro PDF. Browsers like Microsoft Edge or Google Chrome do not support PDF attachments, although Firefox does. If using Nitro PDF, attachments are shown in the Attachment Pane. To show or hide the Attachments pane, look in the sidebar and click the Attachments tab.

An **Open File** dialog box may open with a warning message about potential harm from programs, macros or viruses. The files supplied do not contain any harmful content, and may be safely opened.

If using Adobe Acrobat Reader, click on the button below to open the spreadsheet. Some older versions of Adobe Acrobat Reader have a bug and do not support this button functionality. If the button does not work, upgrade your Adobe Acrobat Reader for free, to the latest version.

FlexOperand D60 88x

15.3 FLEXANALOG ITEMS

A FlexAnalog parameter is an analog parameter.

FlexAnalog items specific to your device are viewable in a web browser. Enter the IP address of the UR, access the **DeviceInformation** Menu option, then the **FlexAnalog Parameter** Listing option. Entries displayed online depend on order code.

Each FlexAnalog address is the Modbus memory map address prefixed with 0004. For example, with Modbus address of 1638, the FlexAnalog address is 00041638.

The data items are kept in files attached to this PDF. Depending on the file type, the files may be opened using Microsoft Excel, or free web-based software such as Google Sheets, or PDF viewer capable of opening attachments, such as Adobe Acrobat Reader or Nitro PDF.

Please note that this manual must be opened with a PDF viewer capable of opening attachments, such as Adobe Acrobat Reader or Nitro PDF. Browsers like Microsoft Edge or Google Chrome do not support PDF attachments, although Firefox does. If using Nitro PDF, attachments are shown in the Attachment Pane. To show or hide the Attachments pane, look in the sidebar and click the Attachments tab.

An **Open File** dialog box may open with a warning message about potential harm from programs, macros or viruses. The files supplied do not contain any harmful content, and may be safely opened.

If using Adobe Acrobat Reader, click on the button below to open the spreadsheet. Some older versions of Adobe Acrobat Reader have a bug and do not support this button functionality. If the button does not work, upgrade your Adobe Acrobat Reader for free, to the latest version.

FlexAnalog D60 88x

15.4 VERSION HISTORY

Manual P/N	FW revision	Release date	ECO
1601-0089-0.1	1.5x (Beta)	23 August 1999	N/A
1601-0089-A1	2.0x	17 December 1999	N/A
1601-0089-A2	2.0x	14 January 2000	URD-001
1601-0089-A3	2.2x	12 May 2000	URD-002
1601-0089-A4	2.2x	14 June 2000	URD-003
1601-0089-A4a	2.2x	28 June 2000	URD-003a
1601-0089-B1	2.4x	08 September 2000	URD-004
1601-0089-B2	2.4x	03 November 2000	URD-005
1601-0089-B3	2.6x	08 March 2001	URD-006
1601-0089-B4	2.8x	27 September 2001	URD-007
1601-0089-B5	2.9x	03 December 2001	URD-008
1601-0089-B6	2.9x	07 January 2002	URD-009
1601-0089-B7	2.9x	15 March 2002	URD-010
1601-0089-B8	2.6x	27 February 2004	URX-120
1601-0089-C1	3.0x	02 July 2002	URD-010
1601-0089-C2	3.1x	30 August 2002	URD-012
1601-0089-C3	3.0x	18 November 2002	URD-016
1601-0089-C4	3.1x	18 November 2002	URD-017
1601-0089-C5	3.0x	11 February 2003	URD-020
1601-0089-C6	3.1x	11 February 2003	URD-021
1601-0089-D1	3.2x	11 February 2003	URD-023
1601-0089-D2	3.2x	02 June 2003	URX-084
1601-0089-E1	3.3x	01 May 2003	URX-080
1601-0089-E2	3.3x	29 May 2003	URX-083
1601-0089-F1	3.4x	10 December 2003	URX-111
1601-0089-F2	3.4x	09 February 2004	URX-115
1601-0089-F3	3.4x	27 February 2004	URX-130
1601-0089-G1	4.0x	23 March 2004	URX-123
1601-0089-G2	4.0x	17 May 2004	URX-136
1601-0089-H1	4.2x	30 June 2004	URX-145
1601-0089-H2	4.2x	23 July 2004	URX-151
1601-0089-J1	4.4x	15 September 2004	URX-156
1601-0089-K1	4.6x	15 February 2005	URX-176
1601-0089-L1	4.8x	05 August 2005	URX-202
1601-0089-M1	4.9x	15 December 2005	URX-208
1601-0089-M2	4.9x	27 February 2006	URX-214
1601-0089-N1	5.0x	31 March 2006	URX-217
1601-0089-N2	5.0x	26 May 2006	URX-220
1601-0089-P1	5.2x	23 October 2006	URX-230
1601-0089-P2	5.2x	24 January 2007	URX-232

Manual P/N	FW revision	Release date	ECO
1601-0089-R1	5.4x	26 June 2007	URX-242
1601-0089-R2	5.4x	31 August 2007	URX-246
1601-0089-R3	5.4x	17 October 2007	URX-251
1601-0089-S1	5.5x	7 December 2007	URX-253
1601-0089-S2	5.5x	22 February 2008	URX-258
1601-0089-S3	5.5x	12 March 2008	URX-260
1601-0089-T1	5.6x	27 June 2008	08-0390
1601-0089-U1	5.7x	29 May 2009	09-0938
1601-0089-U2	5.7x	30 September 2009	09-1165
1601-0089-V1	5.8x	29 May 2010	09-1457
1601-0089-V2	5.8x	04 January 2011	11-2237
1601-0089-W1	5.9x	12 January 2011	11-2227
1601-0089-X1	6.0x	21 December 2011	11-2840
1601-0089-X2	6.0x	5 April 2012	12-3254
1601-0089-Y1	7.0x	30 September 2012	12-3529
1601-0089-Y2	7.0x	11 November 2012	12-3601
1601-0089-Z1	7.1x	30 March 2013	13-0126
1601-0089-AA1	7.2x	1 August 2013	13-0401
1601-0089-AB1	7.3x	7 November 2014	14-1408
1601-0089-AB2	7.3x	1 September 2015	15-2215
1601-0089-AC1	7.40x	8 December 2016	16-3319
1601-0089-AE1	7.41x	31 January 2017	17-3427
1601-0089-AE3	7.4x	28 April 2017	17-3561
1601-0089-AF1	7.6x	30 June 2017	17-3779
1601-0089-AF2	7.6x	31 October 2017	17-3935
1601-0089-AG1	7.7x	31 March 2018	18-4430
1601-0089-AG2	7.7x	4 May 2018	18-4517
1601-0089-AH1	7.8x	17 December 2018	18-4703
1601-0089-AI1	7.9x	24 October 2019	19-5181
1601-0089-AJ1	8.0x	30 October 2019	19-5182
1601-0089-AJ2	8.0x	12 June 2020	20-5580
1601-0089-AK1	8.1x	20 November 2020	20-6096
1601-0089-AL1	8.2x	16 February 2021	21-6228
1601-0089-AL2	8.2x	23 July 2021	21-6482
1601-0089-AM1	8.3x	6 May 2022	22-6815
1601-0089-AM2	8.3x	14 October 2022	22-7224
1601-0089-AN1	8.4x	14 December 2022	22-7333
1601-0089-AN2	8.4x	28 June 2023	23-7692
1601-0089-AP1	8.5x	30 November 2023	23-7922
D60-1601-0089-860-1	8.60	8 October 2024	24-0338
D60-1601-0089-86x-2	8.6x	24 February 2025	25-0084
D60-1601-0089-86x-3	8.6x	31 July 2025	25-0291
D60-1601-0089-87x-1	8.70	31 October 2025	25-0484

Manual P/N	FW revision	Release date	ECO
D60-1601-0089-87x-2	8.71	10 February 2026	26-0057
D60-1601-0089-88x-1	8.80	24 July 2026	26-0254
D60-1601-0089-88x-2	8.80	18 August 2026	26-0320

GE VERNOVA

© 2026 General Electric. All rights reserved. Information contained in this document is indicative only. No representation or warranty is given or should be relied on that it is complete or correct or will apply to any particular project. This will depend on the technical and commercial circumstances. It is provided without liability and is subject to change without notice. Reproduction, use or disclosure to third parties, without express written authority, is strictly prohibited.