GE Industrial Systems

DGP

Digital Generator Protection Relay™

Instruction Manual

DGP Revisions: V210.32000P
V212.10000F
V211.32000J
V210.22000D

Manual P/N: GEK-100666F

Copyright © 2003 GE Multilin

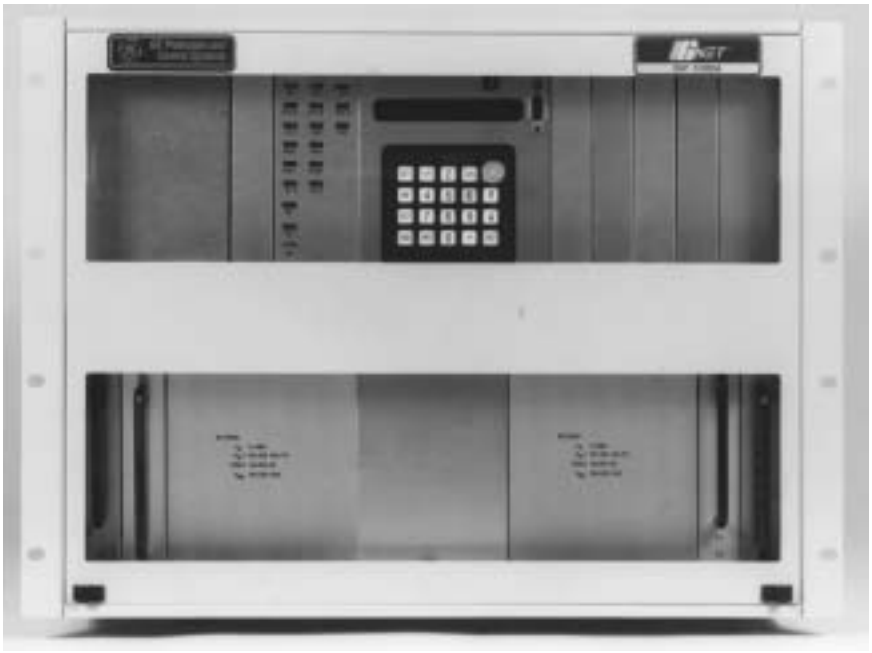

GE Multilin

215 Anderson Avenue, Markham, Ontario

Canada L6E 1B3

Tel: (905) 294-6222 Fax: (905) 294-8512

Internet: http://www.GEindustrial.com/multilin

ISO9000 REGISTERED

Manufactured under an
ISO9002 Registered system.

These instructions do not purport to cover all details or variations in equipment nor provide for every possible contingency to be met in connection with installation, operation, or maintenance. Should further information be desired or should particular problems arise which are not covered sufficiently for the purchaser's purpose, the matter should be referred to the General Electric Company.

To the extent required the products described herein meet applicable ANSI, IEEE, and NEMA standards; but no such assurance is given with respect to local codes and ordinances because they vary greatly.

TABLE OF CONTENTS

1. PRODUCT DESCRIPTION

1.1 GETTING STARTED

1.1.1 UNPACKING THE RELAY 1-1
1.1.2 ORDER CODES & SELECTION GUIDE 1-2
1.1.3 SPECIAL MODELS 1-4
DGP***AAA-0101 and DGP***AAA-0102 1-4
DGP***ABA-0005 1-4
1.1.4 DEC 1000 CONTACT EXPANSION UNIT 1-4

1.2 INTRODUCTION

1.2.1 GENERAL 1-5
1.2.2 APPLICATION 1-5

1.3 PROTECTION FEATURES

1.3.1 DESCRIPTION 1-7
1.3.2 STATOR DIFFERENTIAL (87G) 1-8
1.3.3 CURRENT UNBALANCE (46T) 1-8
1.3.4 LOSS OF EXCITATION (40) 1-8
1.3.5 ANTI-MOTORING (32) 1-9
1.3.6 TIME OVERCURRENT WITH VOLTAGE RESTRAINT 51V 1-9
1.3.7 STATOR GROUND (64G/27TN) 1-9
1.3.8 GROUND OVERCURRENT (51GN) 1-10
1.3.9 OVEREXCITATION (24) 1-10
1.3.10 OVERVOLTAGE (59) 1-11
1.3.11 UNDERVOLTAGE (27) 1-11
1.3.12 OVER AND UNDERFREQUENCY (81) 1-11
1.3.13 VOLTAGE TRANSFORMER FUSE FAILURE (VTFF) 1-11
1.3.14 ACCIDENTAL ENERGIZATION (AE) 1-12

1.4 OTHER FEATURES

1.4.1 INPUTS 1-18
1.4.2 OUTPUT RELAYS 1-18
1.4.3 START-UP SELF-TESTS 1-19
1.4.4 RUN-TIME SELF-TESTS 1-19
1.4.5 ADAPTIVE SAMPLING FREQUENCY 1-20
1.4.6 TRIP CIRCUIT MONITOR 1-20
1.4.7 SEQUENCE OF EVENTS 1-20
1.4.8 TIME SYNCHRONIZATION 1-21
1.4.9 FAULT REPORT & OSCILLOGRAPHY DATA 1-22
1.4.10 LOCAL MAN-MACHINE INTERFACE 1-22
1.4.11 LOCAL PRINTER 1-22
1.4.12 REMOTE COMMUNICATIONS 1-22
1.4.13 REMOTE CONTROL 1-23
1.4.14 PASSWORD PROTECTION 1-23
1.4.15 REMOTE COMMUNICATIONS – MODBUS PROTOCOL 1-23

1.5 ELEMENTARY DIAGRAMS

2. CALCULATION OF SETTINGS

2.1 GENERAL

2.1.1 DESCRIPTION 2-1

2.2 CONFIGURATION SETTINGS

2.2.1 DESCRIPTION 2-10
101: UNITID – UNIT ID NUMBER 2-10
102: SYSFREQ – SYSTEM FREQUENCY 2-10
103: SEL TVM – SELECT TRIP VOLTAGE MONITORING 2-10
104: SEL TCM – SELECT TRIP CURRENT MONITORING 2-10
105: SELPRIM – SELECT PRIMARY/SECONDARY UNITS 2-10
106: CT RATIO – CURRENT TRANSFORMER RATIO 2-10

107: VT RATIO – VOLTAGE TRANSFORMER RATIO 2-10
108: COMMPORT – COMMUNICATIONS PORT 2-11
109: PHASE – PHASE DESIGNATION 2-11
110: TIMESYNC – TIME SYNCHRONIZATION SOURCE 2-11
111: NUM FLTS – NUMBER OF FAULT EVENTS 2-11
112: PREFLT – PREFAULT CYCLES 2-12
113: OSC TRIG – EXTERNAL OSCILLOGRAPHY TRIGGER 2-12
114: NOM VOLT – NOMINAL VOLTAGE 2-12
115: RATEDCUR – RATED CURRENT 2-12
116: VT CONN – VOLTAGE TRANSFORMER CONNECTION 2-12
117: NCTRATIO – NEUTRAL CURRENT TRANSFORMER RATIO 2-12
2.2.2 EXAMPLE CONFIGURATION SETTINGS 2-12

2.3 PROTECTION FUNCTION SETTINGS

2.3.1 TRIP AND ALARM OUTPUT RELAYS 2-13
2.3.2 STATOR DIFFERENTIAL 87G 2-13
2.3.3 CURRENT UNBALANCE ALARM 46A 2-18
2.3.4 CURRENT UNBALANCE TRIP 46T 2-18
2.3.5 LOSS OF EXCITATION 40, 40-1, 40-2 2-20
2.3.6 ANTI-MOTORING (REVERSE POWER) 2-21
2.3.7 OVERCURRENT WITH VOLTAGE RESTRAINT (51V) 2-22
2.3.8 STATOR GROUND FAULT 64G-1 2-28
2.3.9 STATOR GROUND FAULT 64G-2 2-28
2.3.10 STATOR GROUND FAULT 27TN 2-28
2.3.11 OVEREXCITATION ALARM (VOLTS/HERTZ: 24A) 2-29
2.3.12 OVEREXCITATION TRIP (VOLTS/HERTZ: 24T) 2-29
2.3.13 OVERVOLTAGE 59 2-34
2.3.14 UNDERVOLTAGE CUTOFF OF 81 2-36
2.3.15 UNDERFREQUENCY 81-U 2-36
2.3.16 OVERFREQUENCY 81-O 2-36
2.3.17 DIGITAL INPUT DI 2-36
2.3.18 VOLTAGE TRANSFORMER FUSE FAILURE VTFF 2-37
2.3.19 ACCIDENTAL ENERGIZATION AE 2-37
2.3.20 GROUND OVERCURRENT 51GN 2-38
2.3.21 UNDERVOLTAGE 27 2-38

2.4 COMMISSIONING

2.4.1 DGP***AAA SETTINGS TABLE 2-41
2.4.2 DGP***ABA SETTINGS TABLE 2-46
2.4.3 DGP****CA SETTINGS TABLE 2-51

3. HARDWARE DESCRIPTION

3.1 CASE ASSEMBLY

3.1.1 WARNING 3-1
3.1.2 CONSTRUCTION 3-1
3.1.3 ELECTRICAL CONNECTIONS & INTERNAL WIRING 3-1
3.1.4 IDENTIFICATION 3-1

3.2 CIRCUIT BOARD MODULES

3.2.1 WARNING 3-4
3.2.2 BASIC CONSTRUCTION 3-4
3.2.3 IDENTIFICATION 3-4

3.3 XTM TEST PLUGS

3.3.1 DESCRIPTION 3-6
3.3.2 TERMINAL DESIGNATION 3-6
3.3.3 XTM TEST-CIRCUIT CONNECTIONS 3-6
3.3.4 TEST PLUG INSERTION 3-6

3.4 INSTALLATION

3.4.1 RECEIVING, HANDLING, & STORAGE 3-7
3.4.2 ENVIRONMENT 3-7
3.4.3 MOUNTING 3-7
3.4.4 EXTERNAL CONNECTIONS 3-7
3.4.5 EXTERNAL CONNECTIONS TEST 3-7
3.4.6 SURGE GROUND CONNECTIONS 3-7

4. ACCEPTANCE TESTS

4.1 INTRODUCTION

4.1.1 WARNING 4-1
4.1.2 GENERAL 4-1
a GENERAL TESTS 4-1
b PROTECTION TESTS 4-1

4.2 TEST PREPARATION

4.2.1 TEST EQUIPMENT 4-2
4.2.2 DRAWINGS & REFERENCES 4-2
a DRAWINGS 4-2
b REFERENCES 4-2
4.2.3 EQUIPMENT GROUNDING 4-2
4.2.4 REQUIRED SETTINGS 4-2

4.3 GENERAL INSTRUCTIONS

4.3.1 PROCEDURE 4-3
4.3.2 SETTING CHANGES 4-3
4.3.3 ENTERING THE TEST MODE 4-4
4.3.4 EXITING THE TEST MODE 4-4

4.4 USING DGP-PC

4.4.1 DESCRIPTION 4-5
4.4.2 HARDWARE SETUP 4-5
4.4.3 SOFTWARE SETUP 4-5
a LOAD & START DGP-LINK 4-5
b SET UP A NEW TEST UNIT 4-5
4.4.4 RELAY SETUP 4-6
4.4.5 LOGGING INTO THE RELAY 4-6
4.4.6 SETTING CHANGES 4-7
4.4.7 ENTERING THE TEST MODE 4-7
4.4.8 EXITING THE TEST MODE 4-7

4.5 INITIAL TEST SETUP

4.5.1 DESCRIPTION 4-8

4.6 GENERAL RELAY TESTS

4.6.1 NOTE 4-9
4.6.2 T1: MMI STATUS AND DISPLAY TESTING 4-9
a STATUS CHECK 4-9
b WARNING STATUS 4-9
c DISPLAY TEST 4-10
4.6.3 T2: DIGITAL OUTPUT TESTS 4-11
4.6.4 T3: DIGITAL INPUT TESTS 4-13
4.6.5 T4: AC SYSTEM INPUT TEST 4-15

4.7 PROTECTION TESTS

4.7.1 DESCRIPTION 4-17
4.7.2 T5: GENERATOR DIFFERENTIAL TEST 87G 4-17
4.7.3 T6: CURRENT UNBALANCE ALARM 46A 4-19
4.7.4 T7: CURRENT UNBALANCE TRIP 46T 4-19
4.7.5 T8: LOSS OF FIELD PROTECTION ZONE 1 40-1 4-21
4.7.6 T9: LOSS OF FIELD PROTECTION ZONE 2, 40-2 4-22

4.7.7 T10: ANTI-MOTORING & SEQUENTIAL TRIP SUPERVISION 32-1 4-22
4.7.8 T11: ANTI-MOTORING 32-2 4-23
4.7.9 T12: TIME OVERCURRENT WITH VOLTAGE RESTRAINT 51V 4-23
4.7.10 T13: ACCIDENTAL ENERGIZATION AE 4-24
4.7.11 T14: STATOR GROUND ZONE 1 64G1 4-26
4.7.12 T15: STATOR GROUND ZONE 2 64G2 4-27
4.7.13 T16: VOLTS/HERTZ OVEREXCITATION ALARM 24A 4-29
TEST RESULTS: 4-29
4.7.14 T17: VOLTS/HERTZ OVEREXCITATION TRIP 24T 4-30
4.7.15 T18: POSITIVE-SEQUENCE OVERVOLTAGE 59 4-31
TEST RESULTS 4-31
4.7.16 T19: UNDERFREQUENCY UNIT #1 81-1U 4-32
4.7.17 T20: UNDERFREQUENCY UNIT #2 81-2U 4-32
4.7.18 T21: UNDERFREQUENCY UNIT #3 81-3U 4-33
4.7.19 T22: UNDERFREQUENCY UNIT #4 81-4U 4-33
4.7.20 T23: OVERFREQUENCY UNIT #1 81-1O 4-34
4.7.21 T24: OVERFREQUENCY UNIT #2 81-2O 4-34
4.7.22 T25: OVERFREQUENCY UNIT #3 81-3O 4-35
4.7.23 T26: OVERFREQUENCY UNIT #4 81-4O 4-35
4.7.24 T27: VOLTAGE TRANSFORMER FUSE FAILURE VTFF 4-36
4.7.25 T28: TOC GROUND OVERCURRENT 51GN 4-36
4.7.26 T29: UNDERVOLTAGE 27 4-37
4.7.27 T30: THIRD HARMONIC NEUTRAL UNDERVOLTAGE 27TN 4-37

4.8 END OF ACCEPTANCE TESTING
4.8.1 DESCRIPTION 4-39

5. PERIODIC TESTS

5.1 INTRODUCTION
5.1.1 DESCRIPTION 5-1
5.1.2 GENERAL TESTS 5-1
5.1.3 PROTECTION FUNCTION TESTS 5-1
5.1.4 GENERAL INSTRUCTIONS 5-1

5.2 RELAY TESTS
5.2.1 T1: RELAY STATUS & MMI 5-2
a STATUS CHECK 5-2
b DISPLAY TEST 5-2
5.2.2 T2: DIGITAL OUTPUT TEST 5-3
5.2.3 T3: DIGITAL INPUT TEST 5-3
5.2.4 T4: AC SYSTEM INPUT TEST 5-4

5.3 MEASURING UNIT TESTS
5.3.1 DESCRIPTION 5-6
5.3.2 T5: GENERATOR DIFFERENTIAL TEST 87G 5-6
5.3.3 T6: CURRENT UNBALANCE ALARM 46A 5-6
5.3.4 T7: CURRENT UNBALANCE TRIP 46T 5-7
5.3.5 T8: LOSS OF EXCITATION 40-1 5-8
5.3.6 T9 ANTI-MOTORING TEST 32-1 5-9
5.3.7 T10: TIME OVERCURRENT WITH VOLTAGE RESTRAINT 51V 5-10
5.3.8 T11: STATOR GROUND ZONE 1 64G1 5-11
5.3.9 T12: STATOR GROUND ZONE 2 64G2 5-11
5.3.10 T13: VOLTS/HERTZ OVEREXCITATION ALARM 24A 5-12
5.3.11 T14: VOLTS/HERTZ EXCITATION TRIP 24T 5-13
5.3.12 T15: POSITIVE-SEQUENCE OVERVOLTAGE 59 5-14
5.3.13 T16: UNDERFREQUENCY UNIT #1 81-1U 5-14
5.3.14 T17: OVERFREQUENCY UNIT #1 81-1O 5-15
5.3.15 T18: VOLTAGE TRANSFORMER FUSE FAILURE VTFF 5-15
5.3.16 T19: TOC GROUND OVERCURRENT 51GN 5-16

5.3.17 T20: POSITIVE-SEQUENCE UNDERVOLTAGE 27 5-16

5.4 END OF PERIODIC TESTING

5.4.1 ENDING PERIODIC TESTS 5-18

6. SERVICING

6.1 SPARES

6.1.1 DESCRIPTION 6-1

6.2 RELAY SELF-TESTS

6.2.1 DESCRIPTION 6-2

6.3 TROUBLESHOOTING

6.3.1 DESCRIPTION 6-4
6.3.2 USING THE INFORMATION STATUS COMMAND 6-4
6.3.3 SERVICING A CRITICAL FAILURE FAIL 6-5
6.3.4 SERVICING A NON-CRITICAL FAILURE WARN 6-5
6.3.5 SERVICING SYSTEM STATUS FAILURES 6-6

6.4 ERROR CODES

6.4.1 ERROR MESSAGES AT STARTUP 6-7
6.4.2 ERROR MESSAGES AT RUNTIME 6-9

7. SPECIFICATIONS

7.1 DGP SPECIFICATIONS

7.1.1 DESCRIPTION 7-1
7.1.2 PROTECTION FUNCTIONS AND SETTING RANGES 7-2

8. INTERFACE

8.1 DISPLAY

8.1.1 DESCRIPTION 8-1

8.2 TARGET LEDs & TARGET RESET KEY

8.2.1 TARGET LEDs 8-2
8.2.2 TARGET RESET KEY 8-2

8.3 KEYPAD

8.3.1 DESCRIPTION 8-3
8.3.2 CLEAR KEY [CLR] 8-3
8.3.3 PRINT KEY [PRT] 8-4
8.3.4 ARROW KEYS 8-4
8.3.5 ENTER KEY [ENT] 8-4
8.3.6 DATA ENTRY KEYS 8-4
8.3.7 END KEY [END] 8-5
8.3.8 SETTINGS KEY [SET] 8-5
8.3.9 ACTIONS KEY [ACT] 8-7
1. DISABLE OUTPUTS 8-7
2. ENABLE OUTPUTS 8-7
3. TRIP 8-8
4. RESET 8-8
5. DATE/TIME 8-8
6. RELAY TEST 8-9
7. MMI TEST 8-9
8. FIX UP SETTINGS CRC 8-9
9. ENTER PASSWORD 8-10
10. CHANGE PASSWORD 8-10
11. DIGITAL OUTPUT TEST 8-10
..... 8-11

8.3.10 INFORMATION KEY [INF] 8-12
1. REQUEST DGP STATUS 8-12
2. REQUEST FAULT INFORMATION 8-12
3. REQUEST PRESENT VALUES 8-13
4. REQUEST EVENTS 8-13
5. VIEW PASSWORD 8-13
6. REQUEST DGP MODEL/VERSION 8-13
7. STATION ID 8-13
8. GENERATOR ID 8-13
..... 8-14

8.4 ERROR MESSAGES
8.4.1 DESCRIPTION 8-15

8.5 PASSWORDS
8.5.1 DESCRIPTION 8-16
8.5.2 ENCRYPTED PASSWORD CONVERSION TABLE 8-17

9. COMMUNICATIONS

9.1 INTRODUCTION
9.1.1 HARDWARE JUMPERS 9-1
9.1.2 MODEM CONNECTIONS & SETTINGS 9-1
9.1.3 PC MODEM 9-1
9.1.4 DGP MODEM 9-2
9.1.5 NULL MODEM CONNECTIONS 9-2
9.1.6 RS485 COMMUNICATIONS 9-4

9.2 MODBUS COMMUNICATIONS
9.2.1 INTRODUCTION 9-5
9.2.2 DATA FRAME FORMAT & DATA RATE 9-5
9.2.3 DATA PACKET FORMAT 9-5
a SLAVE ADDRESS 9-5
b FUNCTION CODE 9-6
c DATA 9-6
d CRC HI & CRC LO 9-6
9.2.4 ERROR CHECKING 9-6
9.2.5 DATA FRAMING 9-6

9.3 MODBUS FUNCTIONS
9.3.1 FUNCTION CODE 03/04: READING HOLDING/INPUT REGISTERS 9-7
a DESCRIPTION 9-7
b QUERY 9-7
c RESPONSE 9-7
9.3.2 FUNCTION CODE 05: FORCE SINGLE COIL 9-8
a DESCRIPTION 9-8
b QUERY 9-8
c RESPONSE 9-8
9.3.3 FUNCTION CODE 06: STORE SINGLE SETPOINT 9-9
a DESCRIPTION 9-9
b QUERY 9-9
c RESPONSE 9-9
9.3.4 FUNCTION CODE 16: PRESET MULTIPLE SETPOINTS 9-10
a DESCRIPTION 9-10
b QUERY 9-10
c RESPONSE 9-10
9.3.5 FUNCTION CODE 56: RETRANSMIT LAST PACKET 9-10
a DESCRIPTION 9-10
b QUERY 9-10
c RESPONSE 9-10

9.4 MODBUS ERRORS
9.4.1 ERROR RESPONSES 9-11

9.5 MODBUS MEMORY MAPPING

9.5.1 DATA TYPES 9-12
9.5.2 MEMORY MAP ORGANIZATION 9-13
9.5.3 FIXED VALUE INPUT REGISTERS 9-13
9.5.4 PRESENT VALUE REPORT REGISTER MAP 9-13
9.5.5 EVENT REPORT MEMORY MAP 9-14
9.5.6 FAULT STATUS MEMORY MAP 9-14
9.5.7 FAULT REPORT REGISTER MAP 9-14
9.5.8 OSCILLOGRAPHY REPORT MEMORY MAP 9-15
a CONTROL REGISTERS 9-15
b OSCILLOGRAPHY HEADER 9-15
c OSCILLOGRAPHY SETTINGS 9-15
d OSCILLOGRAPHY DATA 9-16
e COMMUNICATION EXAMPLE 9-16
9.5.9 EVENT CODES & STATUS REGISTERS 9-17
a EVENT CODES 9-17
b SP (STATUS) REGISTERS 9-20
c OSC SETTINGS 9-23
9.5.10 MMI PASSWORDS 9-24
9.5.11 SETTINGS 9-24
9.5.12 STATION & GENERATOR ID REGISTER MAP 9-24
9.5.13 DATE & TIME 9-24
9.5.14 MEMORY MAP 9-25

9.6 COIL COMMANDS

9.6.1 DESCRIPTION 9-49

9.7 FACTORY SETTINGS (GE FACTORY TESTS ONLY)

9.7.1 DESCRIPTION 9-50

10. DGP-PC SOFTWARE

10.1 INTRODUCTION

10.1.1 OVERVIEW 10-1
10.1.2 SYSTEM REQUIREMENTS 10-1
a HARDWARE 10-1
b SOFTWARE 10-1
10.1.3 INSTALLATION 10-1

10.2 GENERAL OPERATION

10.2.1 PROTECTION JUMPERS 10-2
10.2.2 DGP-PC USER INTERFACE 10-2
10.2.3 ADDING/MODIFYING A SITE (LOCATION) 10-2
10.2.4 DELETING A SITE (LOCATION) 10-3

10.3 IED CONNECTION

10.3.1 SERIAL CONNNECTION 10-4
10.3.2 MODEM CONNECTION 10-4
10.3.3 IED MODES 10-5
10.3.4 ADDING/MODYFYING AN IED 10-5
a ADDING AN IED 10-5
b MODIFYING IED PROPERTIES 10-6
c DELETING AN IED 10-6
10.3.5 RETREIVING INFORMATION 10-6

10.4 MANIPULATING SETTINGS

10.4.1 EDIT MODE 10-8
10.4.2 SETTINGS MODE 10-8

10.5 PERFORMING OPERATIONS

10.5.1 DESCRIPTION 10-9
10.5.2 CHANGE PASSWORD 10-9

10.5.3 MANUAL TRIP 10-9
10.5.4 ENABLE OUTPUTS 10-9
10.5.5 DISABLE OUTPUTS 10-9
10.5.6 CHANGE DATE & TIME 10-10
10.5.7 CHANGE GENERATOR/STATION ID 10-10
10.5.8 RELAY TEST 10-10
10.5.9 DIGITAL OUTPUT TEST 10-10
10.5.10 DIGITAL RESET 10-10

10.6 GETTING INFORMATION
10.6.1 DESCRIPTION 10-11
10.6.2 PRESENT VALUES 10-11
10.6.3 FAULT REPORT IDENTIFICATION 10-11
10.6.4 FAULT REPORT 10-11
10.6.5 EVENTS LOG 10-11
10.6.6 OSCILLOGRAPHY DATA 10-12
10.6.7 DGP STATUS 10-12
10.6.8 DGP MODEL 10-12
10.6.9 STATION/GENERATOR ID 10-12
10.6.10 MMI PASSWORD 10-12

A. TABLES AND FIGURES
A.1 TABLES AND FIGURES
A.1.1 LIST OF TABLES A-1
A.1.2 LIST OF FIGURES A-1

B. REVISIONS
B.1 CHANGE NOTES
B.1.1 REVISION HISTORY B-1
B.1.2 ADDITIONS TO DGP MANUAL B-1
B.1.3 CHANGES TO DGP MANUAL B-3

C. DGP FAQ
C.1 DGP FAQ
C.1.1 FREQUENTLY ASKED QUESTIONS C-1
C.1.2 NOT-SO-FREQUENTLY ASKED QUESTIONS C-4

D. WARRANTY
D.1 DGP WARRANTY

1.1.1 UNPACKING THE RELAY

The following procedure describes how to unpack and setup the DGP.

1. Unpack and examine the DGP Digital Generator Protection relay. Ensure each module is properly seated in the relay prior to applying power.
2. Apply rated DC power to the relay at the power supply input terminals. Refer to the appropriate elementary diagram in Section 1.5: ELEMENTARY DIAGRAMS on page 1–24 for the location of these terminals. The rated DC value (Vps) for the relay is found on the nameplate located inside the front cover on the right side.
3. The DGP settings and control functions are protected by passwords on both MMI and remote access. The relay is shipped with the factory default passwords that must be changed before any setting change or control command can be executed (GE Modem Version only). The default passwords are listed below:

MODE	PASSWORD
MMI - SETTING	1234.
MMI - MASTER	5678.
REMOTE LINK - VIEW	VIEW!
REMOTE LINK - SETTING	SETT!
REMOTE LINK - CONTROL	CTRL!

   Note that the characters "." and "!" are part of the default passwords.

4. Instructions on how to use the keypad to change settings and put the relay into test mode can be found in Section 4.3.2: SETTING CHANGES on page 4–3. Complete instructions on how to operate the keypad are found in Section 8.3: KEYPAD on page 8–3.
5. To communicate with the relay from a PC, connect the relay to a serial port of an IBM compatible computer with a DGP null-modem cable. Connection can be made either to the 25 pin D-connector on the back of the relay (PL-1) or the 9 pin D-connector on the front (COM).
6. Refer to Figure 9–1: DGP COMMUNICATIONS WIRING on page 9–3 for the internal wiring of the cable.
7. DGP-PC, the communications software required to access the relay from a PC, is included on the GE Multilin Products CD or available from the GE Multilin web site at www.ge.com/indsys/pm. Follow instructions in 10.1.3: INSTALLATION on page 10–1 to load DGP-PC onto the PC.
8. To log into the relay, follow the instructions in Section 4.4: USING DGP-PC on page 4–5.
9. This instruction book describes functions available in DGP models with standard function groups A, B, and C. Refer to the Nomenclature Selection Guide shown below to determine functions included in a specific model.

Table 1–1: ORDER CODES

	DGP	*	*	*	*	*	*	
Base Unit	DGP	|	|	|	|	|	|	Base Unit
Current Rating		1	|	|	|	|	|	1 Ampere Rated Current
		5	|	|	|	|	|	5 Ampere Rated Current
Power Supply			0	|	|	|	|	One Power Supply, 48 V DC
			1	|	|	|	|	One Power Supply, 110 to 125 V DC
			2	|	|	|	|	One Power Supply, 220 to 250 V DC
			3	|	|	|	|	Two Power Supplies, 48 V DC
			4	|	|	|	|	Two Power Supplies, 110 to 125 V DC
Test Blocks				A	|	|	|	With Test Blocks
				B	|	|	|	Without Test Blocks
Protocol					A	|	|	GE Modem Protocol
					B	|	|	Modbus RTU Protcol (DGP***BCA only)
Functions and Features						A	|	Functions and Features – see DGP selection guide below.
						B	|	
						C	|	
Revision							A	DGP Revision A Firmware

Table 1–2: DGP SELECTION GUIDE

FUNCTIONS & FEATURES	A	B	C
Stator Differential 87G	✔	✔	✔
Current Unbalance 46	✔	✔	✔
Loss of Excitation 40-1, 40-2	✔	✔	✔
Anti-motoring 32	2	1	2
Overcurrent Voltage Restraint 51V	✔	✔	✔
Stator Ground 64G1 ①	✔	✔	✔
Stator Ground 64G2 ②	✔	-	✔
Stator Ground 27TN ③	-	✔	✔
Neutral Overcurrent 51GN	-	✔	✔
Overexcitation 24 (Volts/Hz)	✔	✔	✔
Overvoltage 59	✔	✔	✔
Undervoltage 27	-	✔	✔
Underfrequency 81-U	4	2	4
Overfrequency 81-O	4	2	2
Accidental Engergization Logic	✔	✔	✔
Sequential Trip Logic	✔	✔	✔
Voltage Transformer Fuse Failure VTFF	✔	✔	✔
Oscillography Data Capture	✔	✔	✔
RS232 Communications Ports	2	2	2
Printer Output	✔	-	✔
IRIG-B Input	✔	✔	✔
DEC1000 compatible	-	-	✔

① 64G1 is Fundamental Frequency Overvoltage, also known as 59GN
② 64G2 uses 3rd harmonic comparator algorithm for enhanced security
③ 27TN is 3rd Harmonic Undervoltage supervised by an adjustable window of forward power.

1.1.3 SPECIAL MODELS

In addition to the standard DGP model described by the order codes above, several special models are available. Some of these are shown below with a brief description.

DGP***AAA-0101 and DGP***AAA-0102

This model is similar to the standard DGP***AAA except for the following major changes:

- All digital inputs are rated for nominal voltage of 110 to 125 V DC instead of the standard 48 to 250 V DC
- The logic for function 51V is modified to remove fault detector supervision
- Seperate terminals are provided for the optional second power supply input

Refer to instruction book GEK-105552 for additional detail.

DGP***ABA-0005

This model is similar to the standard DGP***ABA except for the following major changes:

- Includes the Stator Ground 27TN function
- Includes oscillography data capture and IRIG-B input capabilities
- Suitable for application with 208 V AC nominal input

Refer to instruction book GEK-105587 for additional detail.

1.1.4 DEC 1000 CONTACT EXPANSION UNIT

The DEC 1000 is a relay expansion unit for the DGP consisting of five form C relays and six form A relays. These contacts can be used for signalling or alarm purposes. Any protection function available in the companion DGP relay can be selected for DEC output relay assignment. The DEC 1000 is connected via the DGP printer port PL2.

NOTE

The DEC 1000 expansion unit is only compatible with the DGP✻✻✻✻✻C units.

NOTE

The DGP expansion unit is only compatible with the DGP✻✻✻✻CA units.

1.2.1 GENERAL

The DGP Digital Generator Protection™ System is a microprocessor-based digital relay system that uses waveform sampling of current and voltage inputs to provide protection, control and monitoring of generators. These samples are used to compute current and voltage phasors that are used for the protection-function algorithms. The DGP™ system uses a man-machine interface (MMI) and DGP-PC software for local and remote communication respectively.

This instruction book describes all the functions available in the various standard DGP models. Refer to the SELECTION GUIDE in the previous section to determine functions included in a specific model.

1.2.2 APPLICATION

The DGP system is designed to be used on hydroelectric, gas, and steam generating units. Any size of generator can be protected with this digital system.

More detailed application considerations are contained below in the remaining headings of this section and in Chapter 2: CALCULATION OF SETTINGS.

A typical wiring diagram for the DGP relay is shown on the following page.

1

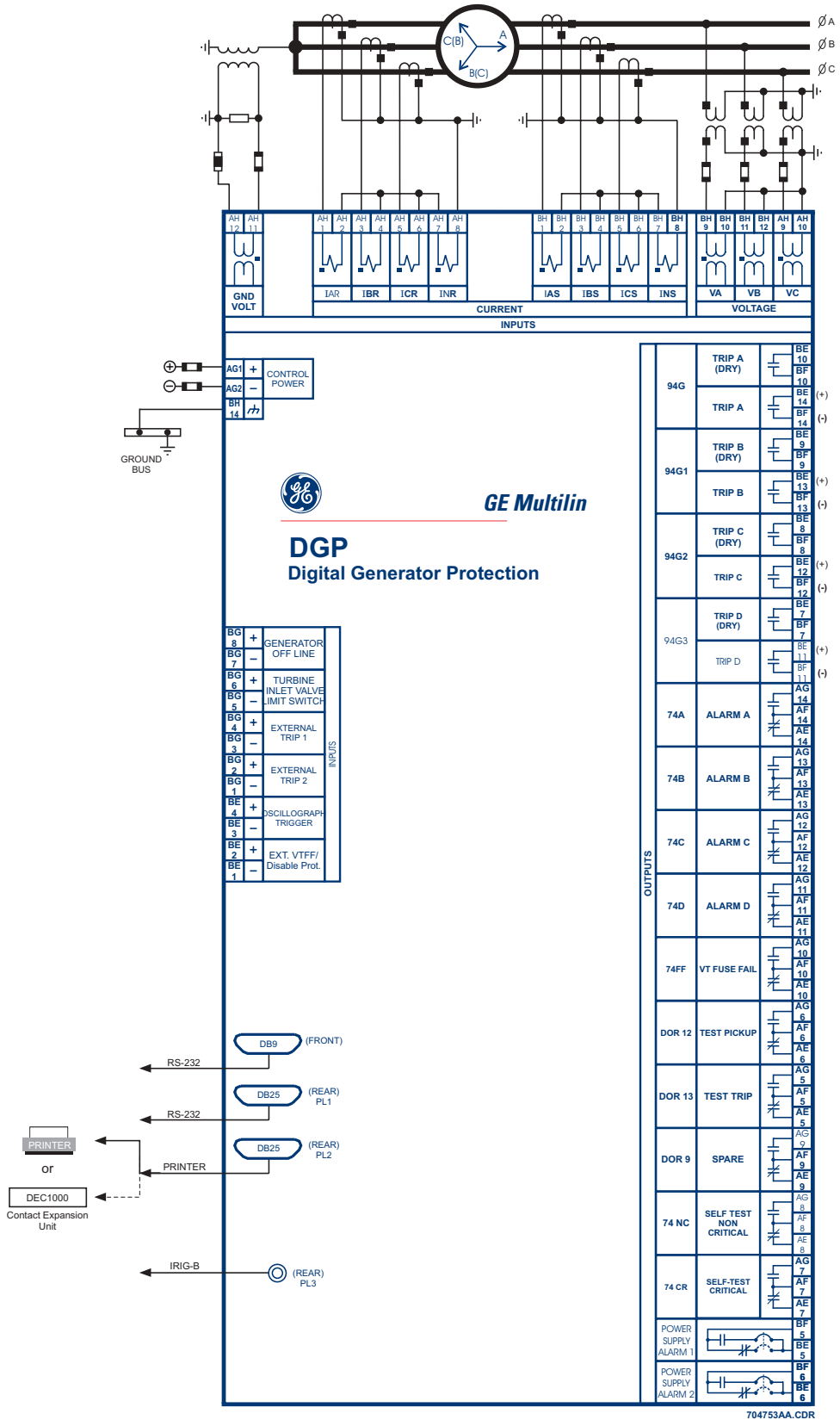

Figure 1–1: TYPICAL WIRING DIAGRAM

The following protection functions are included with the DGP system.

Table 1–3: DGP PROTECTION FUNCTIONS

PROTECTION FUNCTION	ANSI CODE(S)
Stator Differential	87G
Current Unbalance	46
Loss of Excitation	40
Anti-Motoring	32
Time Overcurrent with Voltage Restraint	51V
Stator Ground	64G1, 64G2, 27TN
Ground Overcurrent	51GN
Over-excitation	24
Overvoltage	59
Undervoltage	27
Over and Underfrequency	81
Voltage Transformer Fuse Failure	VTFF
Accidental Energization	AE

A single-line diagram for the DGP is shown below.

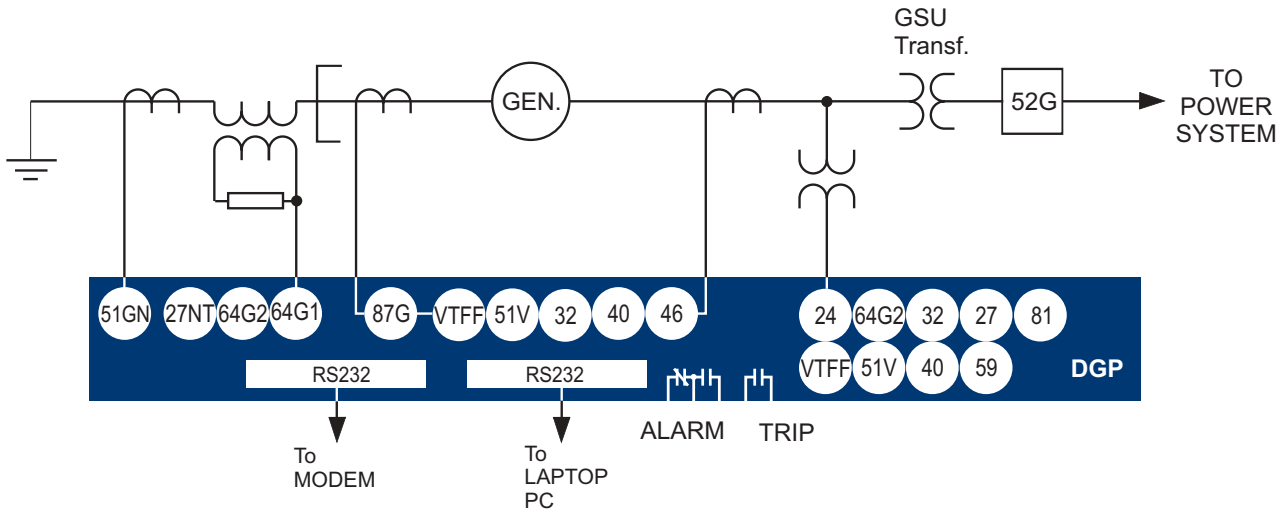

Figure 1–2: SINGLE LINE DIAGRAM

1.3.2 STATOR DIFFERENTIAL (87G)

This function provides high-speed protection of the generator stator during internal phase-to-phase and three-phase faults. It uses a product-restraint algorithm with dual-slope characteristic described in Section 2.3.2: STATOR DIFFERENTIAL 87G on page 2–13. Refer to Figure 1–3: SIMPLE LOGIC DIAGRAM – 87G, 32, 27, 59, AND AE on page 1–13 for the logic diagram of this function.

Function 87G will not operate for turn-to-turn faults in the machine windings.

It will also not operate for single-phase-to-ground faults if the system is ungrounded or high-impedance grounded. Phase-to-ground protection by this function requires that the neutral of the machine (or another machine operating in parallel) be grounded. A small portion of the winding next to the neutral will not be protected, the amount being determined by the voltage necessary to cause minimum pickup current to flow through the neutral-to-ground impedance. Current-limiting devices in the neutral-ground circuit increase this impedance and will decrease the ground-fault-protection coverage of this function.

1.3.3 CURRENT UNBALANCE (46T)

There are several causes of generator unbalance. Some of these include unbalanced loads, unbalanced system faults, and/or open circuits. The negative-sequence component (I_2) of stator current is directly related to this unbalance and sets up a counter-rotating flux field in the machine. This in turn causes local heating in the rotor iron. The capability of machines to withstand heating caused by unbalance currents is typically exper-essed in terms of an I_2^2T constant, and is supplied by the manufacturer of the machine.

The current unbalance trip function (46T) of the DGP provides operating-time characteristics expressed as I_2^2T = K, as shown in Figure 2–6: TIME CURRENT CHARACTERISTIC OF 46T FUNCTION on page 2–19. A linear reset characteristic is incorporated to approximate the machine cooling following an intermittent current-unbalance condition. In addition to 46T, the DGP system also includes a current-unbalance alarm function, 46A, which is operated by the negative-sequence component (I2) with an adjustable pickup and time delay. See Figure 1–4: SIMPLE LOGIC DIAGRAM – 46, 40, AND 51V on page 1–14 for the logic diagram.

1.3.4 LOSS OF EXCITATION (40)

This function is used to detect loss of excitation on synchronous machines. It includes two mho characteristics looking into the machine, each with adjustable reach, offset, and time delay. Logic is provided to block this function by presence of a negative-sequence voltage (indicating a voltage transformer fuse failure VTFF condition) and/or an external VTFF Digital Input DI6 (see Figure 1–4: SIMPLE LOGIC DIAGRAM – 46, 40, AND 51V on page 1–14).

Excitation can be lost due to inadvertent tripping of the field breaker, open or short circuit on the field winding, regulator failure, or loss of the source to the field winding. Loss of excitation can be damaging to the machine and/or detrimental to the operation of the system. When a synchronous generator loses excitation, it will tend to act as an induction generator: it will run above normal speed, operate at reduced power and receive its excitation (VARS) from the system. The impedance seen by a relay looking into a generator will depend on the machine characteristics, the load flow prior to the loss of excitation, and the type of excitation failure.

Studies indicates that first zone mho function (40-1) can be set to detect severe cases of excitation failure with a shorter time delay, whereas the second zone (40-2) can be set to detect all the excitation failure cases. A longer time delay setting is required for the 40-2 function for security during stable power system swing conditions. Figure 2–7: MHO CHARACTERISTICS FOR 40-1 & 40-2 FUNCTIONS on page 2–21 shows the characteristics of this function.

1.3.5 ANTI-MOTORING (32)

On a total or partial loss of prime mover, if the power generated is less than no-load losses of the machine, real power will start flowing into the generator. Typical motoring power of different kinds of prime movers are shown in the table below. For a specific application, the minimum motoring power of the generator should be obtained from the supplier of the unit.

The DGP system includes a reverse power function with adjustable time-delay. Either one or two (32-1 & 32-2) independent setpoints are incorporated depending on the model number.

Table 1–4: TYPICAL MOTORING POWER

TYPE OF PRIME MOVERS	MOTORING POWER IN % OF UNIT RATING
Gas Turbine	10 to 100
Diesel	15 to 25
Hydraulic Turbine	2 to 100
Steam Turbine	0.5 to 4

The 32-1 can be configured as a part of sequential tripping logic as shown in Figure 1–3: SIMPLE LOGIC DIAGRAM – 87G, 32, 27, 59, AND AE on page 1–13. If the sequential trip logic is used, 32-1 is enabled when closing of turbine inlet valves is indicated by digital input DI2 following a turbine trip. The trip sequence is then continued when timer TL1 times out. The 32-2, if included, is not dependent on the DI2 and is primarily intended to provide backup to the sequential trip. If the sequential trip is not enabled, the 32-1 can be used as anti-motoring similar to 32-2.

1.3.6 TIME OVERCURRENT WITH VOLTAGE RESTRAINT 51V

A system must be protected against prolonged generator contribution to a fault. The DGP incorporates a time-overcurrent function with voltage restraint (51V) to provide part of the system backup protection. As shown in Figure 1–4: SIMPLE LOGIC DIAGRAM – 46, 40, AND 51V on page 1–14, this function is supervised by a fault detector and VTFF. The VTFF supervision can be by an internal and/or external (DI6) VTFF function. See Section 2.3.7: OVERCURRENT WITH VOLTAGE RESTRAINT (51V) on page 2–22 for the characteristic curves of the 51V. Note that a separate algorithm is processed for each phase, with the restraint provided by corresponding phase voltage. The restraint is proportional to the magnitude of the voltage and is independent of the phase angle. A linear reset characteristic is incorporated for this function.

1.3.7 STATOR GROUND (64G/27TN)

This function consists of two overlapping zones (64G1 and 64G2/27TN) to detect stator ground faults in a high-impedance-grounded generator system. The 64G1 is standard in all DGP models; however, the 64G2/27TN function is provided in some models only. Together, the two zones cover 100% of the stator windings. See Figure 1–5: SIMPLE LOGIC DIAGRAM – 64G1, 64G2, 51GN, AND 24 on page 1–15.

Normally the generator-stator neutral has a potential close to ground. With the occurrence of a stator ground fault, a potential increase will occur on the neutral for all faults except those near the neutral. 64G1 uses a fundamental-frequency neutral overvoltage to cover about 95% of the stator winding, depending on the pickup voltage setting. Alternately, 64G1 can be used as a generator-bus ground detector in a high-impedance grounded or an ungrounded system. For this application, the VN input must be a zero-sequence voltage derived from the generator bus, and functions 64G2/27TN must be disabled.

64G2 is based on the percentage of third-harmonic voltage at the generator neutral (VN3) compared to the total third-harmonic voltage generated. This function is designed to cover 15% of the neutral end of the stator windings, and is supervised by fundamental and third-harmonic voltage thresholds. These thresholds are fixed at 30 and 0.5 volts respectively. The third-harmonic comparator method eliminates the need to know the generator harmonic characteristic to use or set this function. **Note that wye-connected VTs are required for proper operation of 64G2**.

27TN is the third-harmonic neutral undervoltage function with a forward power supervision and can be used with either wye or delta connected VTs. The percentage of stator windings covered by this function depends on its threshold setting as well as the VN3 generated by the machine at the time of the fault. The magnitude of VN3 under normal conditions is a function of several factors, such as type of generator, load current, load power factor, system status, etc. It can be very small (nearly zero) under some conditions. To enhance security during low VN3 voltage conditions, this function can be inhibited by a settable window of forward power. However, it should be noted that other conditions influencing the VN3 voltage may make 27TN insecure. In these cases, function 64G2 (available in some models; see the DGP nomenclature guide) or some other means should be considered.

Digital input DI1 can be configured to block 64G2/27TN when the generator is off-line. This provision is made to enhance security of the functions under conditions such as static start of a gas turbine generator. Temporary ungrounding of generator neutral during the static start can look like a ground fault near the neutral.

1.3.8 GROUND OVERCURRENT (51GN)

51GN is an inverse overcurrent function available in some models. It can be used to detect stator ground faults in a high or low resistance grounded generator system. See Figure 1–5: SIMPLE LOGIC DIAGRAM – 64G1, 64G2, 51GN, AND 24 on page 1–15 for simplified logic diagram and Figure 2–16: 51GN TIME-CURRENT CHARACTERISTICS on page 2–39 for the inverse time-current characteristics.

This function uses current INR which can be derived by residual connection or by using a generator neutral CT as noted in Figures 1–9: ELEMENTARY DIAGRAM WITH TEST BLOCKS, WYE VTs and 1–12: ELEMENTARY DIAGRAM WITHOUT TEST BLOCKS, DELTA VTs.

Since this function is independent of the phase current inputs, it can alternately be connected to a CT in the neutral of the generator step-up transformer.

1.3.9 OVEREXCITATION (24)

Overexcitation can be caused by regulator failure, load rejection, or an excessive excitation when the generator is off-line. It can also result from decreasing speed while the regulator or an operator attempts to maintain rated stator voltage. The Volts/Hertz quantity is proportional to magnetic flux in the generator and step-up transformer cores, and is used to detect the overexcitation condition. See Figure 1–5: SIMPLE LOGIC DIAGRAM – 64G1, 64G2, 51GN, AND 24 for details.

The overexcitation protection includes trip (24T) and alarm (24A) functions. 24T consists of an inverse function and an instantaneous function with time-delay characteristics. The combination of these two characteristics allows the 24T setting to closely follow the generator and/or step-up transformer V/Hz limit curve. Both 24A and 24T are computed for each of the three phase voltages (see Table 2–3: 24A VOLTAGES on page 2–30).

Function 24T can be configured to operate different output relays for generator on-line and off-line conditions. This function incorporates a user-settable linear reset characteristic to mimic machine cooling. The figures in Section 2.3.12: OVEREXCITATION TRIP (VOLTS/HERTZ: 24T) show the characteristics of this function.

1.3.10 OVERVOLTAGE (59)

This function consists of a positive-sequence overvoltage with an user selectable inverse or definite time characteristic. See Figure 1–3: SIMPLE LOGIC DIAGRAM – 87G, 32, 27, 59, AND AE on page 1–13 for the logic diagram and Figure 2–15: 59 TIME-VOLTAGE CHARACTERISTICS on page 2–35 for the inverse time-voltage characteristics. A linear reset characteristic is incorporated for this function. The overvoltage function can be considered as a backup to the Volts/Hz function. Some possible causes of this condition are a system disturbance or regulator failure.

1.3.11 UNDERVOLTAGE (27)

This function consists of a positive-sequence undervoltage with an user selectable inverse or definite time characteristic. See Figure 1–3: SIMPLE LOGIC DIAGRAM – 87G, 32, 27, 59, AND AE on page 1–13 for the logic diagram and Figure 2–17: 27 TIME-VOLTAGE CHARACTERISTICS on page 2–40 for the inverse time-voltage characteristics. A linear reset characteristic is incorporated for this function.

1.3.12 OVER AND UNDERFREQUENCY (81)

This function provides over and underfrequency protection, each with an adjustable time delay. Two or four over and underfrequency steps are provided depending on the model. All frequency functions are supervised by an adjustable positive-sequence voltage level. This undervoltage cut-off level and/or digital input DI1 can be used to block the frequency functions during start-up. Frequency disturbance can occur due to a system fault or islanding of the unit or an unconnected unit can operate at abnormal frequency due to malfunction of speed control. Figure 1–6: SIMPLE LOGIC DIAGRAM – 81-O AND 81-U on page 1–16 shows the logic diagram for this function.

1.3.13 VOLTAGE TRANSFORMER FUSE FAILURE (VTFF)

Functions 40 and 51V may operate for a full or partial loss of AC potential caused by one or more blown fuses. The DGP makes provisions to block tripping by these functions when a fuse failure is detected; all other protection functions are allowed to trip. Figure 1–7: SIMPLE LOGIC DIAGRAM – VT FUSE FAILURE on page 1–17 shows the logic diagram for the VTFF function.

If AC potential is lost on one or more phases, the negative-sequence voltage (V2) rises and/or the positive-sequence voltage (V1) drops. Either V2 > 15V or V1 < 50V provides a basic indication of the VTFF condition. This signal is supervised by a Disturbance Detector (DD) and generator positive-sequence current (I1) detector (see three-input AND gate on the logic diagram). Supervision by the DD and I1 signals provide security against false operation during fault and generator out of service conditions respectively. Security is enhanced by use of the A/0 and B/0 timers shown in the logic diagram.

Signal DD is derived from a combination of sequence current levels, change in levels, and pickup flags of various protection functions as shown in the logic diagram.

The VTFF logic allows integration of an external VTFF contact. Either of the two fuse-failure signals or both signals can be configured to block tripping of functions 40 and 51V.

Detection of VTFF energizes the 74FF (Fuse Failure alarm) relay, de-energizes the 74CR (critical alarm) relay, and turns the status LED red, even though all protection functions except 40 and 51V are unaffected.

1.3.14 ACCIDENTAL ENERGIZATION (AE)

The DGP includes logic to detect accidental energization of the generator (see Figure 1–3: SIMPLE LOGIC DIAGRAM – 87G, 32, 27, 59, AND AE on page 1–13). When a generator is energized while at standstill or reduced speed, it behaves and accelerates as an induction motor. The machine terminal voltage and current during such an event will be a function of generator, transformer, and system impedances.

An instantaneous overcurrent signal (50) is used to detect the accidental energization. This signal is armed by a logic signal derived from positive-sequence voltage and GEN OFF LINE input DI1. These two "arming" signals can be configured in AND or OR mode by Setting 2703: **AE ARM**. The 50 function is armed 5 seconds after the generator is taken out of service. The logic automatically disarms itself during a normal start-up sequence when the voltage detector picks up and/or the generator is on-line.

For the AE logic to perform, special precautions must be taken to ensure that the DGP system and associated trip circuits remain in service when the generator is out of service. Additionally, the generator off-line input, DI1, must be reliable. It should also be noted that the pickup flag of function 51V is used as signal 50; therefore this logic will automatically be disabled if function 51V is disabled.

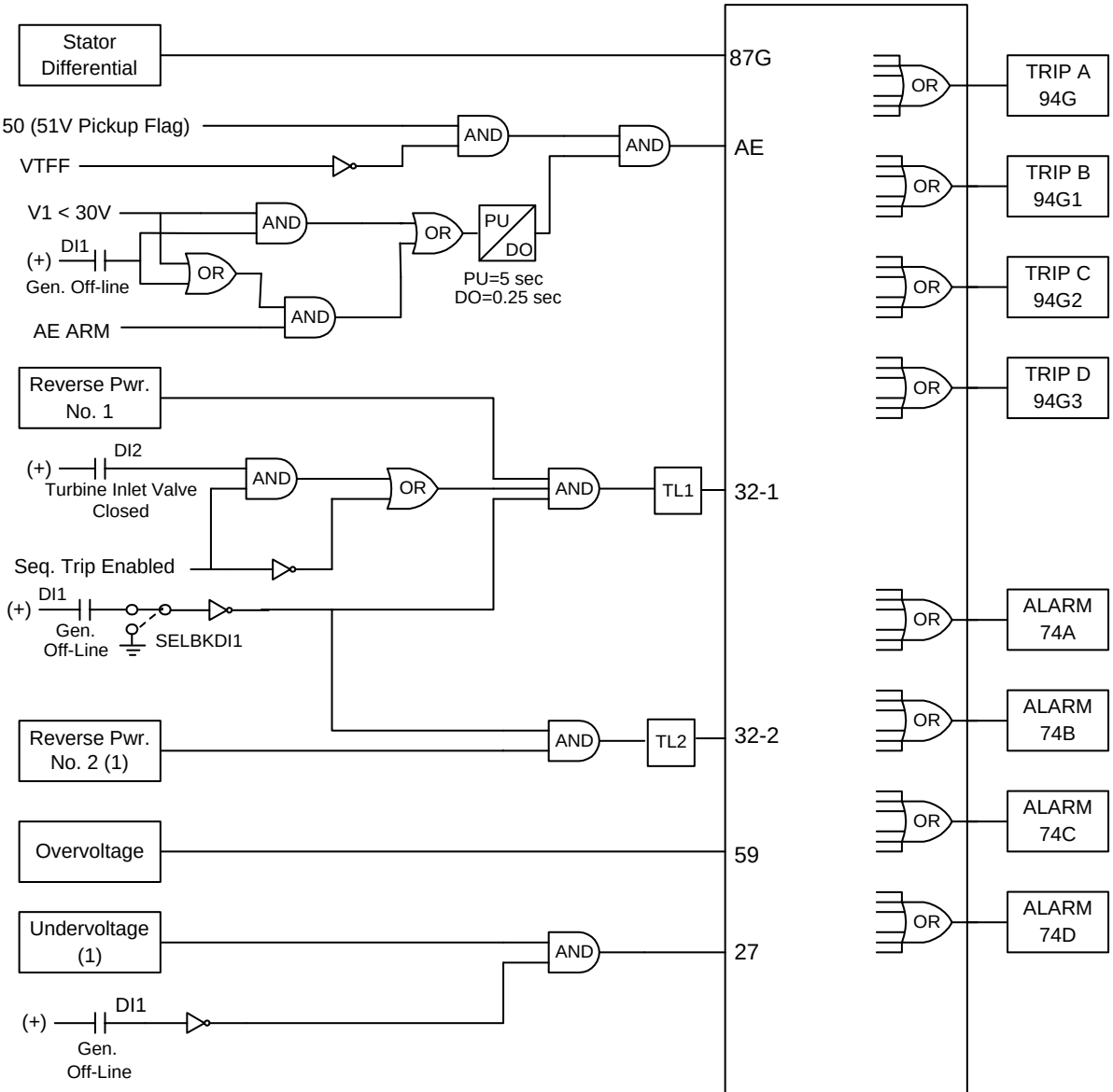

NOTES:

(1) Indicates an optional function (includes associated logic). Refer to DGP nomenclature selection guide for available functions in a specific model.

(2) Each of the available protection functions can be configured to operate any combination of the 8 output relays (4-Trip and 4-Alarm).

Figure 1–3: SIMPLE LOGIC DIAGRAM – 87G, 32, 27, 59, AND AE

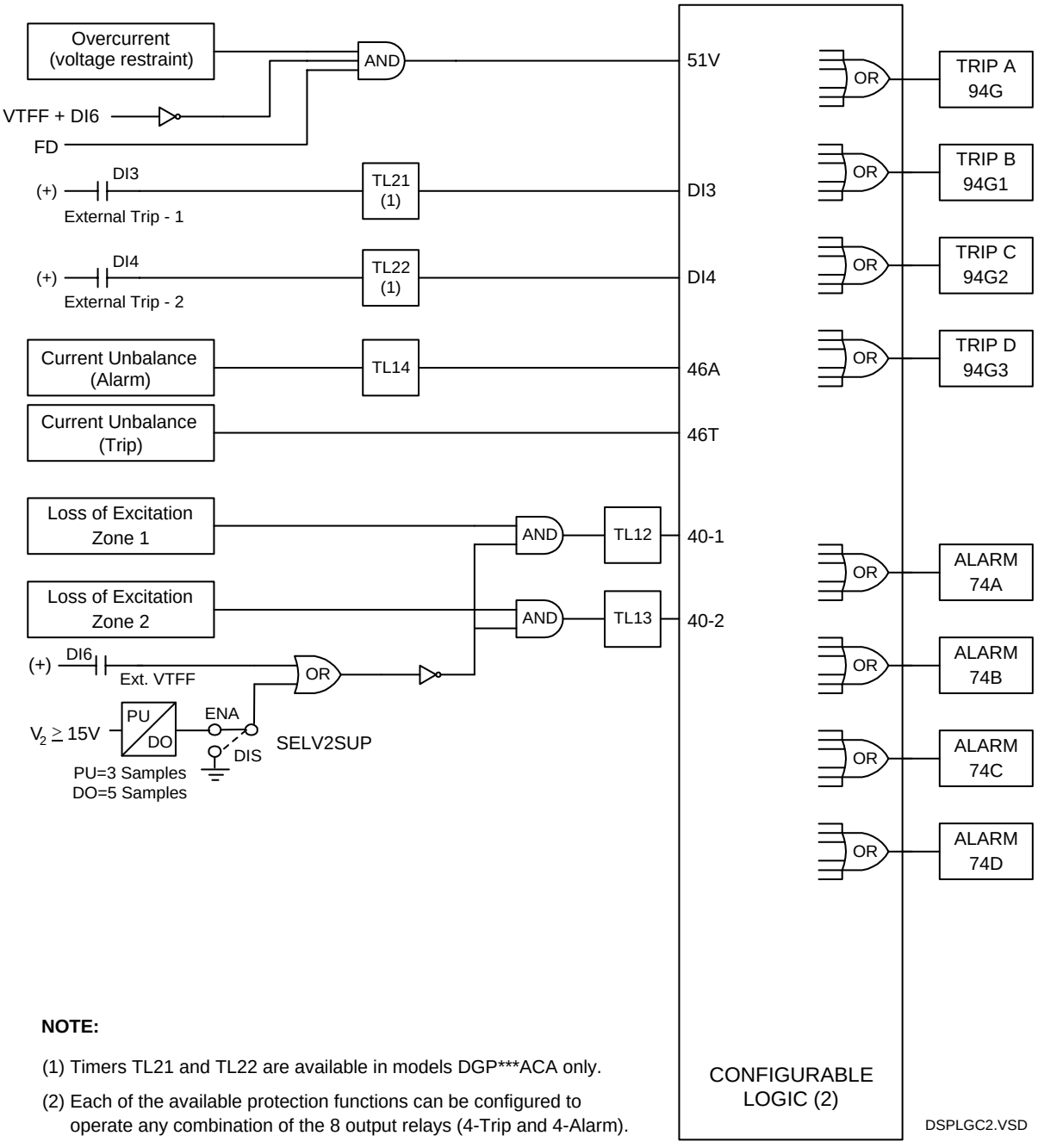

NOTE:

(1) Timers TL21 and TL22 are available in models DGP***ACA only.

(2) Each of the available protection functions can be configured to operate any combination of the 8 output relays (4-Trip and 4-Alarm).

Figure 1–4: SIMPLE LOGIC DIAGRAM – 46, 40, AND 51V

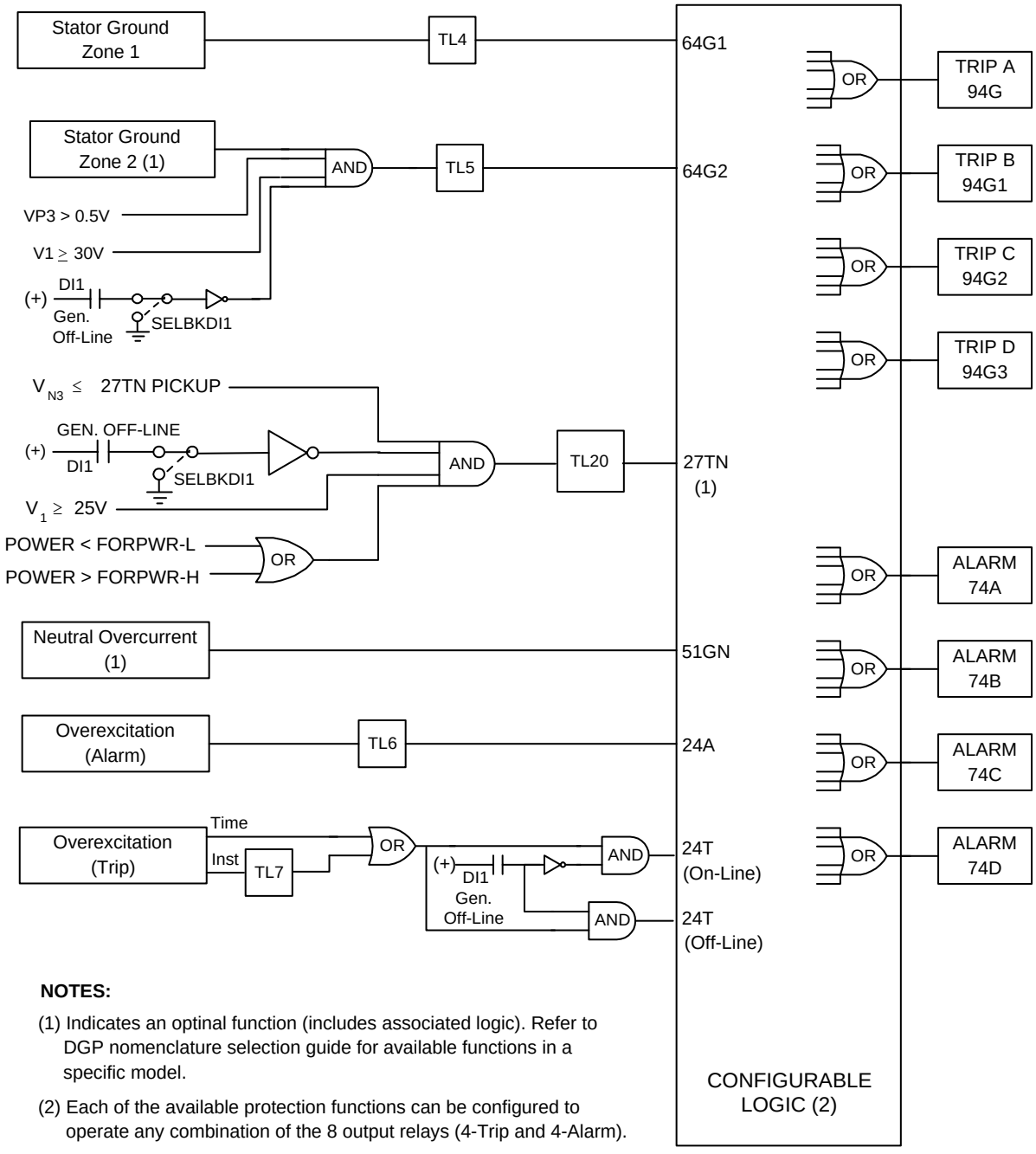

NOTES:

(1) Indicates an optinal function (includes associated logic). Refer to DGP nomenclature selection guide for available functions in a specific model.

(2) Each of the available protection functions can be configured to operate any combination of the 8 output relays (4-Trip and 4-Alarm).

Figure 1–5: SIMPLE LOGIC DIAGRAM – 64G1, 64G2, 51GN, AND 24

1

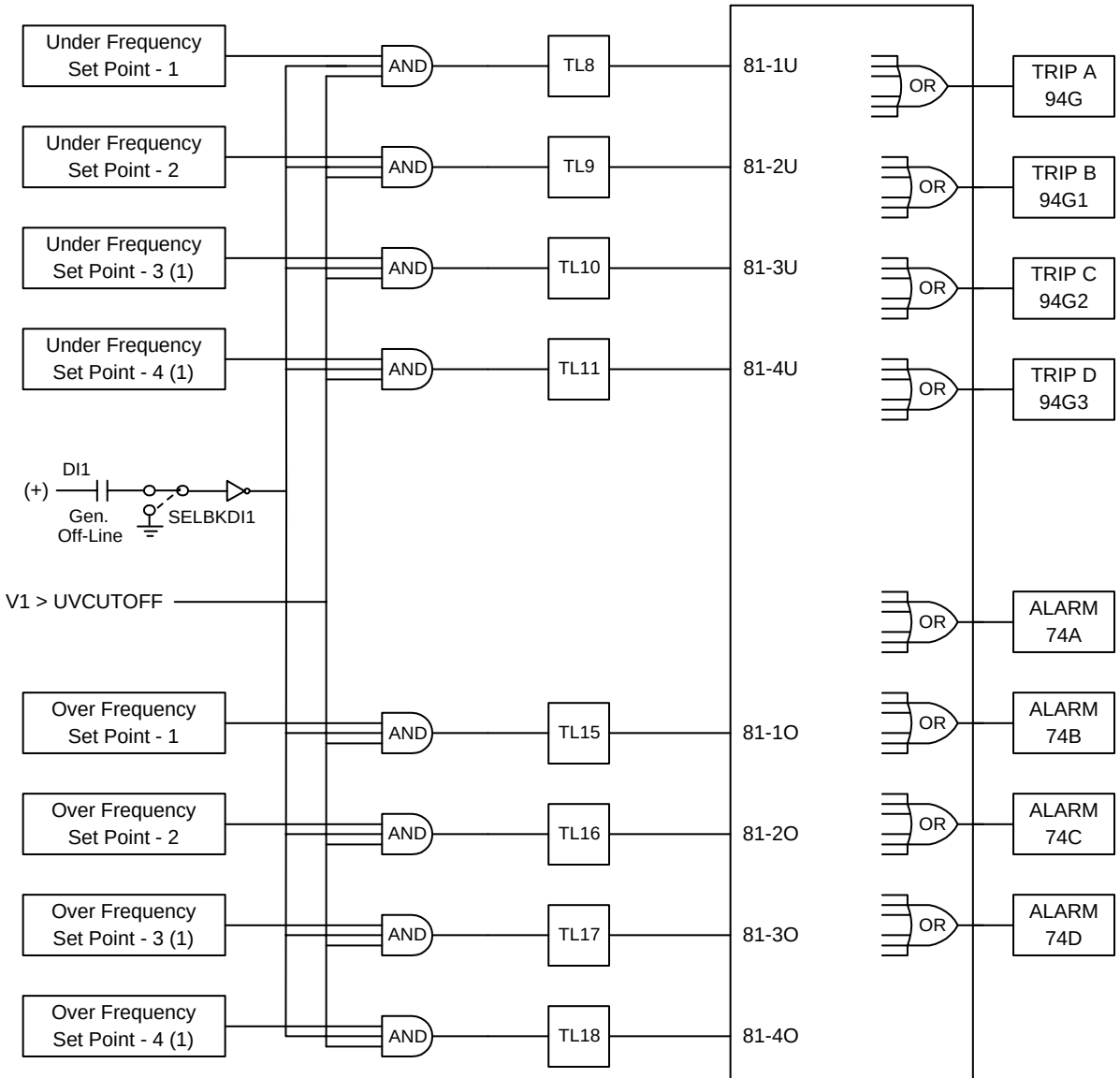

NOTES:

(1) Indicates an optional function (includes associated logic). Refer to DGP nomenclature selection guide for available functions in a specific model.

(2) Each of the available protection functions can be configured to operate any combination of the 8 output relays (4-Trip and 4-Alarm).

Figure 1–6: SIMPLE LOGIC DIAGRAM – 81-O AND 81-U

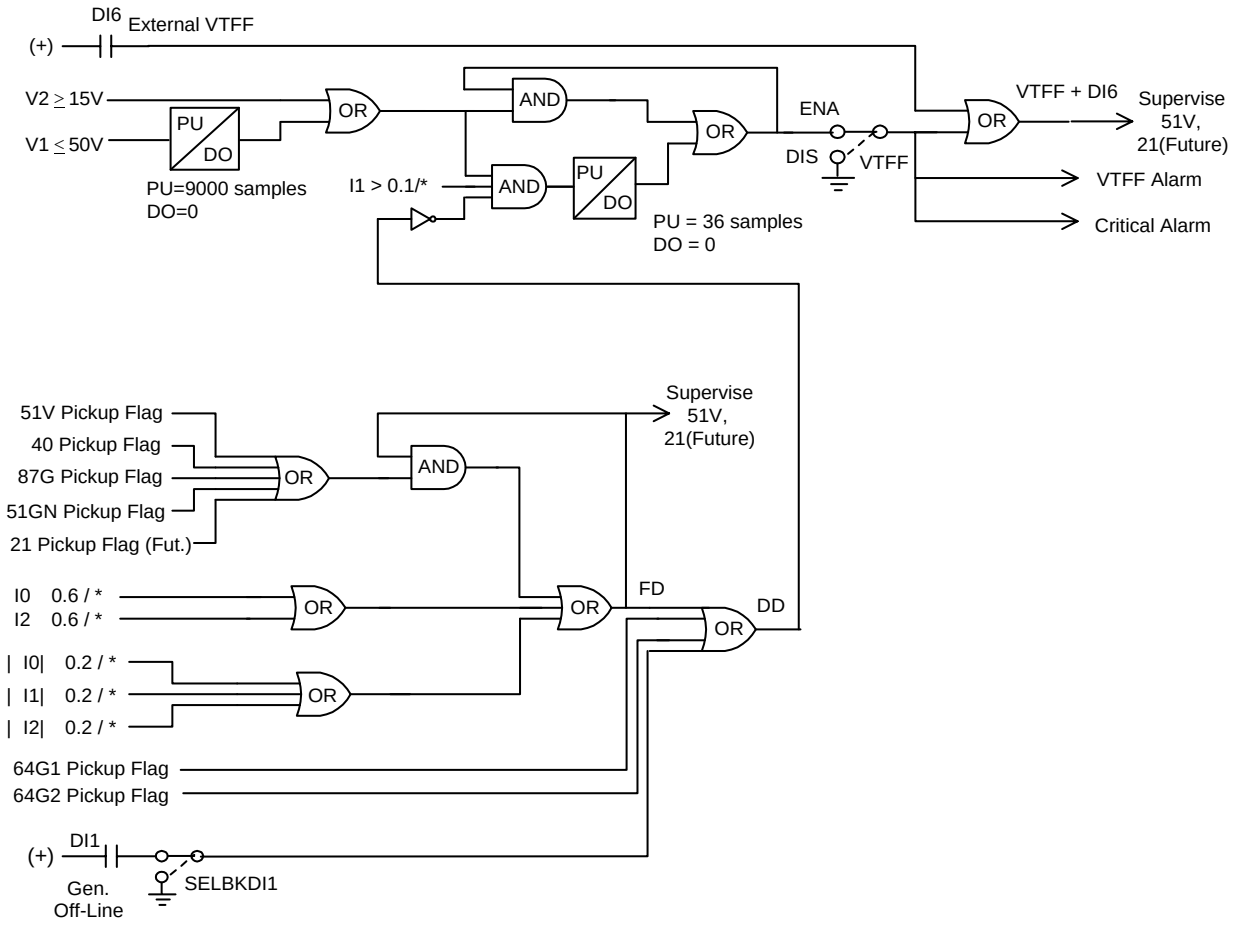

NOTE:
* = 1 FOR 5 AMP RATED DGPs.
* = 5 FOR 1 AMP RATED DGPs.

DGP_VTFF.VSD

Figure 1–7: SIMPLE LOGIC DIAGRAM – VT FUSE FAILURE

1.4.1 INPUTS

The DGP system takes eight current and four voltage inputs (refer to Section 1.5: ELEMENTARY DIAGRAMS). The input currents in terminals BH1, BH3, and BH5 (I_{AS}, I_{BS}, and I_{CS}) are used to process functions 46, 40, 32, and 51V. As noted in the elementary diagrams, these currents can be derived from system side or neutral side CTs as desired. Either the system or neutral side CTs can be used for these functions if the Stator Differential (87G) function is enabled.

The current inputs I_{NS} and I_{NR} are derived from the residual connections of the respective phase CTs and do not require dedicated neutral CTs. Zero-sequence current at system and/or neutral side of the generator stator windings is calculated and then compared with the measured I_{NS} and/or I_{NR} values by the DGP as a part of the background self-test.

The I_{NR} current is used to process the 51GN function (not available on DGP***AAA models). If desired, a dedicated neutral CT can be used for the input I_{NR}.

The DGP phase voltage inputs can be wye or delta and are derived from the generator terminal voltage. V_N is derived from the generator neutral grounding transformer.

A time synchronizing signal can be connected to the DGP for synchronization to within 1 ms of a reference clock. Either IRIG-B or GE's G-NET system signal can be used. This signal is required only if it is necessary to synchronize the DGP to an external reference clock.

Six digital inputs can be connected to the DGP. Two of these inputs (DI3 and DI4) are assigned for possible routing of external trip/alarm signals to take advantage of the output configuration or sequence-of-events capability. Generator off-line (DI1), turbine inlet-valve-close indication (DI2), and external VTFF (DI6) inputs are used for various relay logic functions. A contact input, (DI5), can also be used to trigger the optional oscillography feature. In some models, the DI6 input can be configured as external VTFF or DISABLE ALL PROTECTION (refer to Section 1.5: ELEMENTARY DIAGRAMS for details).

The digital input circuits are universally rated for nominal control voltages of 48 to 250 V DC.

1.4.2 OUTPUT RELAYS

The DGP system includes eight user-configurable output relays. Four of these relays (94G, 94G1, 94G2 and 94G3) are high speed (4 ms) trip-duty rated with two form A contacts each. The remaining four (74A, 74B, 74C and 74D) are standard speed (8 ms) with one form C contact each, intended for alarms. Each of the protection functions can be configured to operate any number of these output relays. The trip outputs are intended for, but not limited to, the following purposes:

- 94G: trip a lockout relay to shut down the machine
- 94G1: trip field breaker
- 94G2: trip main generator breaker or breakers
- 94G3: operate a lockout relay to trip turbine.

In addition to the configurable output relays, five pre-defined alarm duty relays with one form C contact each are included. These alarm relays include critical and non-critical self-test alarms (74CR and 74NC), the VTFF alarm (74FF), and loss of power-supply alarms (PS1 and PS2). The form C contact of each of the alarm relays, except PS1 and PS2, are wired out to the terminal block. A hard wire jumper is used to select either the form A or the form B contact of each of the PS1 and PS2 relays, as shown in Figure 3–3: DGP POWER SUPPLY MODULE on page 3–4.

All alarm relays, with the exception of 74CR, PS1 and PS2, are energized when the appropriate alarm conditions exist. Relays 74CR, PS1 and PS2, however, are energized under normal conditions and will drop out when the alarm conditions exist.

Also included are two additional relays (TEST PICKUP and TEST TRIP) that can be configured to operate by a selected protection function pickup flag and trip output. These two outputs are intended to facilitate testing of the selected protection function.

A Contact Expansion Unit is also available which can be used with DGP***ACA models. The General Electric DEC1000 Contact Expansion Unit provides eleven additional output relays that can be factory configured to user specifications. Refer to the GE Multilin Product Catalog, the GE Multilin Products CD, or instruction book GEK-105561 for additional details on the DEC1000.

1.4.3 START-UP SELF-TESTS

The most comprehensive testing of the DGP is performed during power-up. Since the DGP is not performing any protection activities at that time, tests (such as RAM tests) that would normally be disruptive to run-time processing are performed during the start-up. All processors participate in the start-up self-test process. The processors communicate their results to each other so that any failures found can be reported to the user and to ensure each processor successfully completes its assigned self-tests before the DGP system begins protection activity.

During power-up, the microprocessors perform start-up self-tests on their associated hardware (PROM, local RAM, shared RAM, interrupt controller, timer chip, serial and parallel I/O ports, non-volatile memory, analog and digital I/O circuitry, MMI hardware, etc.). In addition, the DGP system verifies that the PROM version numbers in all processor boards are compatible. The components tested at start-up are listed in Table 6–1: START-UP SELF-TESTS on page 6–2.

In most cases, if any critical self-test failure is detected, the DGP will not continue its start-up but will not cause a reset. An attempt will be made to store the system status, to initialize the MMI and remote communications hardware/software for communication status, and to print a diagnostic message. The critical alarm relay will be de-energized.

If no failures are detected, the DGP completes initialization of its hardware and software. Next, each processor board (DAP and SSP) will enable the outputs. As a final step, the DGP checks the results of all the tests to determine whether to turn the front panel status LED to green.

The start-up procedure takes approximately one minute. As soon as the SSP successfully completes its PROM test and initializes the display hardware, the message **INITIALIZING** will be displayed. When the DGP system initialization is completed, the display is blanked and the relay begins acquiring and processing data.

1.4.4 RUN-TIME SELF-TESTS

Each of the processors has "idle time" when the system is in a quiescent state; that is, when the DGP is not performing fault or post-fault processing. During this idle time, each processor performs background self-tests that are non-disruptive to the foreground processing. If any background self-test fails, the test is repeated. To declare a component FAILED, the test must fail three consecutive times. In the case of critical failures, the DGP forces a self reset to resume operation again after an intermittent failure. The reset activities are identical to the start-up activities except that not all start-up self-tests are performed.

A reset is not reported to the user by the DGP system. If the reset is successful, no message is printed, no failure status is recorded, and the critical alarm is not generated. However, during the reset procedure, the red LED on the MMI panel will light and a failure code may appear on the MMI display. If the reset is not successful, the processor board will be shut down, leaving the MMI panel displaying the error information. Refer to Section 6.4: ERROR CODES on page 6–7 for error codes. To prevent continual resets in the case of a solid failure, both hardware and software will permit only four resets in a one hour period. On the fifth reset, the DGP will not perform initialization, but will attempt to initialize MMI, communications, and the critical alarm output, as in the case of a start-up with a critical self-test failure.

The components tested in the background are listed in Table 6–2: RUN-TIME BACKGROUND SELF-TESTS on page 6–3. The testing of I/O hardware is done in the foreground so the processors know when a given component or port is in use and therefore not available for testing. The components tested in the foreground are listed in Table 6–3: RUN-TIME FOREGROUND SELF-TESTS on page 6–3. Some foreground tests are performed every sample period while others are performed less frequently. As with background self-tests, any failed test is repeated and must fail three consecutive times to be considered a failure. Although not specifically a self-test, trip circuit continuity monitoring is also performed as a foreground test. Refer to the TRIP CIRCUIT MONITOR section below.

In addition to background self-tests, the operator may initiate a visual-response test of the MMI components. Refer to Section 4.6.2 T1: MMI STATUS AND DISPLAY TESTING on page 4–9 for details.

1.4.5 ADAPTIVE SAMPLING FREQUENCY

The DGP system samples analog input waveforms at a rate of 12 samples per cycle. An adaptive sampling frequency is used to maintain this rate over the power system frequencies of 30.5 to 79.5 Hz. As a result of this feature, the measurement accuracy of the analog inputs and the sensitivities of the protection functions are maintained over the range of power system frequencies. This feature provides improved protection for faults during off-normal frequencies (such as start-up conditions). Figure 1–8: FREQUENCY-SENSITIVITY CHARACTERISTICS shows variations in sensitivity of protection functions at different power system frequencies.

The sampling frequency is based on 30.5 Hz for power system frequencies below 30.5 Hz and 79.5 Hz for the frequencies above 79.5 Hz. In either case, if the AC voltage to the DGP drops below approximately 20 V, the sampling frequency is automatically recalculated on the basis of the nominal system frequency (Setting 102: **SYSFREQ**).

The sampling frequency, which is 12 times the measured system frequency, can be accessed as one of the Present Values.

1.4.6 TRIP CIRCUIT MONITOR

The trip circuit monitor consists of DC voltage and current monitors (TVM and TCM respectively). Each of the trip contacts shown with polarity marks in the elementary diagrams (see Section 1.5: ELEMENTARY DIAGRAMS) is monitored. TVM and TCM can be selectively disabled for each of the trip circuits.

Under normal conditions, DC voltage across each of the contacts is continuously monitored. If the DC voltage becomes virtually zero, then the trip circuit has "failed open". The TVM is active only when the generator is online, as indicated by the input DI1. This function is intended to replace the indicating light typically used for trip circuit monitoring. It is universally rated for 48 through 250 V DC. A non-critical alarm is generated when the TVM detects an abnormality.

When the DGP system issues a trip, DC current through each of the appropriate trip contacts is monitored. The trip relay is sealed-in, as long as the current is flowing, to protect the contact. A minimum current of 150 mA is required for the TCM to recognize the trip current. Status of the trip current flow following issuance of any trip is logged in the sequence of events.

1.4.7 SEQUENCE OF EVENTS

This function time-tags and stores the last 100 events in memory. The resolution of the time-tagging is 1 millisecond. The event list contains power system events, operator actions, and self-test alarms. The sequence of events can be accessed, either locally or remotely, by a PC via one of the RS232 ports. A full description of this function is contained in the Chapter 8: INTERFACE.

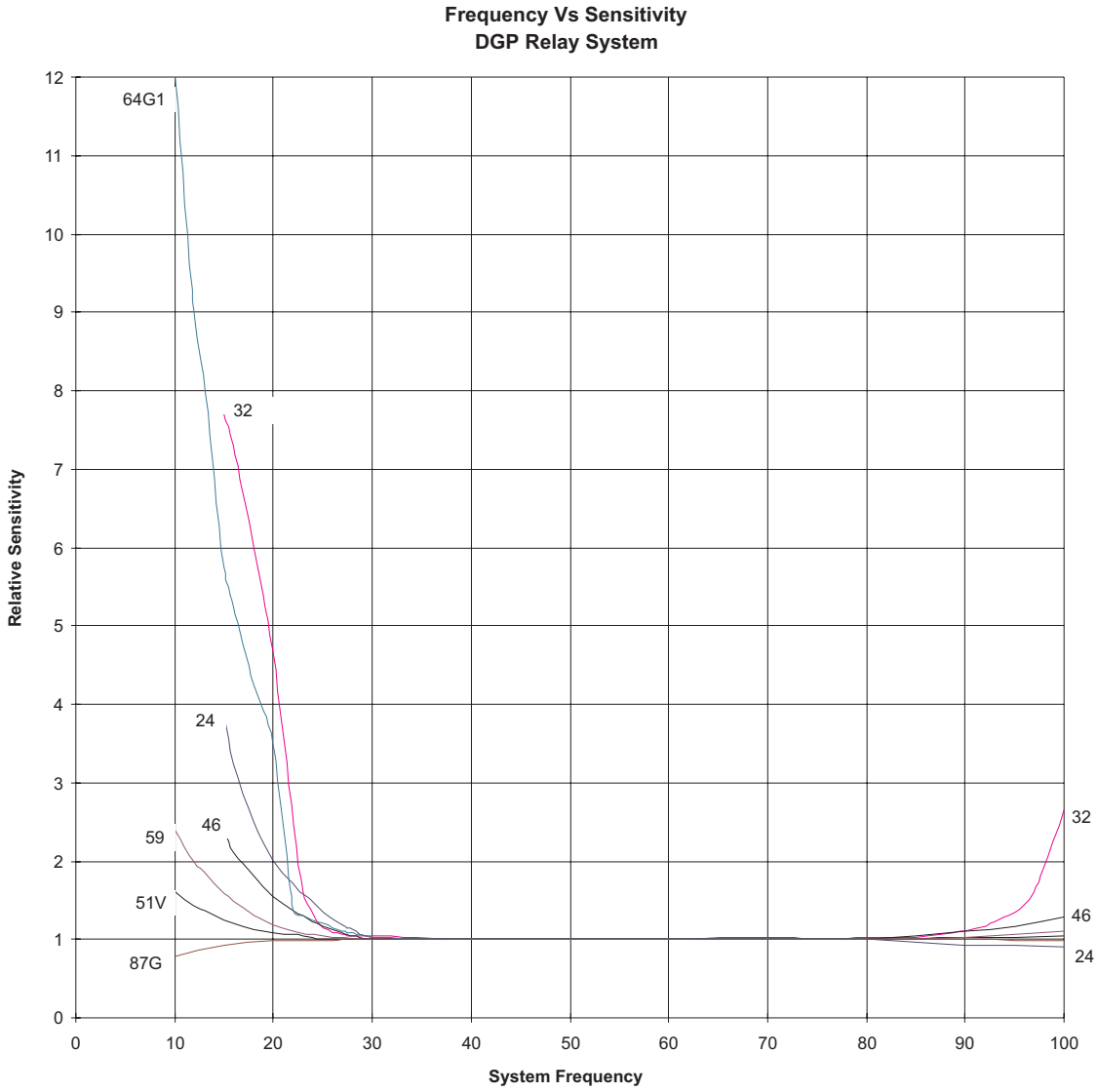

Figure 1–8: FREQUENCY-SENSITIVITY CHARACTERISTICS

1.4.8 TIME SYNCHRONIZATION

The DGP system includes a real time clock that can run freely or be synchronized from an external signal. Two different external time-sync signals are possible. If the DGP is connected to the host computer of a G-NET substation information and control system, then the DGP receives a time-sync pulse via pin 25 of port PL-1. If the DGP is not connected to a G-NET host computer, then a demodulated IRIG-B signal connected to optional port PL-3 may be used to synchronize the clock. In both cases, the clock in a given DGP is synchronized to within ±1 millisecond of any other digital relay clock, provided the two relays are wired to the same synchronizing signal.

1.4.9 FAULT REPORT & OSCILLOGRAPHY DATA

A fault report is initiated by any one of the protection-function pickup flags or an optional external oscillography trigger input, DI5. For the fault report to be completed and stored, the DGP either has to issue a trip or the DI5 input contact must close any time during the fault report period. The fault report period begins when the first protection function flag is up or the DI5 input contact is closed. It ends when the DGP issues a trip or when it has captured the selected number of post-fault waveform cycles, whichever is later. If all the pickup flags reset without issuing a trip and the DI5 does not close, the fault report initiated by the protection flag will not be completed or stored.

The fault report includes the Unit ID, date and time, system operating time, pre-fault metering values, fault currents and voltages, trip/fault types, and up to 14 sequence-of-event points logged after initiation. The system operating time (OP TIME) is the time difference between the first protection function pickup flag and the first protection function trip. The DGP stores the last three fault reports in its memory. A full description of the fault report is contained in Chapter 8: INTERFACE.

DGP models with oscillography data capture capability will store waveform data in their memory each time the system stores a fault report. A total of 120 cycles of data can be stored. The 120 cycles in memory are divided in one, two, or three partitions, based on Setting 111: **NUM FLTS**. The number of prefault cycles captured per fault can be set up to 20 cycles. It should be noted that the pre-fault cycles are based on the first flag or DI5 to initiate the data capture.

Oscillography data includes station and generator identification, a complete list of settings, the fault report, internal flags, and a selected number of pre-fault and post-fault waveform cycles. This data can be displayed using the DGP-PC software program. See Chapter 10: DGP-PC SOFTWARE for details.

1.4.10 LOCAL MAN-MACHINE INTERFACE

A local man-machine interface (MMI), incorporating a keypad, LED display, and 19 target LEDs, is provided to allow the user to enter settings, display present values, view fault target information, and access stored data. The use and functioning of the MMI is fully described in the Chapter 8: INTERFACE.

1.4.11 LOCAL PRINTER

An optional printer port (PL-2) on the rear of the DGP permits the use of a serial printer. The port can also be used to connect the DEC1000 Contact Expansion Unit (DGP***ACA models only) which provides eleven additional output relays. The sequence-of-events (SOE) data are available at this port for immediate printing as they occur. Additionally, for DGP***AAA models, a variety of information stored in the DGP system memory can be printed when requested via the local MMI; see Chapter 8: INTERFACE for details.

1.4.12 REMOTE COMMUNICATIONS

Two RS232 serial ports permit the user to communicate with the DGP from an IBM PC-compatible computer. One of the ports, a DB-25 (PL-1), is located on the rear of the case and the other, a DB-9 (COMM), is located on the front plate of the MMI module.

A PC may be connected to the DGP with a proper null-modem cable, provided the cable length does not exceed 50 feet. The PC can also be connected via interposing modems if it is physically remote from the DGP. DGP-PC software is required to communicate with the DGP. The capabilities and use of the software are described in Chapter 10: DGP-PC SOFTWARE. Refer to Chapter 9: COMMUNICATIONS for details regarding the required cables and proper connection.

When a connection to the host computer of a station integration system is desired, the following two physical connections are possible:

- Standard hard-wire cables may be used for distances up to 50 feet.
- For longer distances it is possible to add an optional external adapter that plugs into PL-1 to provide a fiber optic link between the DGP and the host computer. An isolated 5 V DC supply is internally connected to pin 11 of PL-1 to power this external adapter.

Cables and associated equipment can be connected to each port simultaneously. However, when one port is active the other is effectively disabled. For instance, when PL-1 is connected to host computer of an integration system, it is not possible to log into the DGP from the front port when the integration system is active. If PL-1 is connected to a modem and the front port is connected to a PC using a null-modem cable, then the first port that becomes active is given preference, and the other port is disabled until the first is released.

1.4.13 REMOTE CONTROL

By using the local MMI or a remote PC connected to the RS232 port, it is possible to selectively operate any of the four trip output relays for remote control. The control action may include shutdown of the machine, field breaker trip, main generator breaker trip, turbine trip, etc., depending on the equipment connected to the outputs. The controls described above are enabled or disabled by a hard-wired jumper located on the MMI module (see Figure 3–4: DGP MMI MODULE on page 3–5). As shipped from the factory, this jumper is physically present and the Remote Control is disabled. To enable Remote Control, the jumper must be removed.

1.4.14 PASSWORD PROTECTION

Passwords provide security when using the local interface (MMI) or during remote communications while running the DGP-PC program. Two different passwords provide local MMI security for:

1. control operations (close trip-output contacts)
2. settings changes.

Three different passwords in the DGP-PC program provide remote communications security for:

1. view and upload information
2. control operations
3. settings changes

Refer to the Chapter 8: INTERFACE for a description of MMI password usage, and refer to Chapter 10: DGP-PC SOFTWARE for a description of DGP-PC password usage.

1.4.15 REMOTE COMMUNICATIONS – MODBUS PROTOCOL

The RS232 serial ports can be used with an optional RS485 to RS232 converter. Refer to Chapter 9: COMMUNICATIONS for further information on Modbus communication.

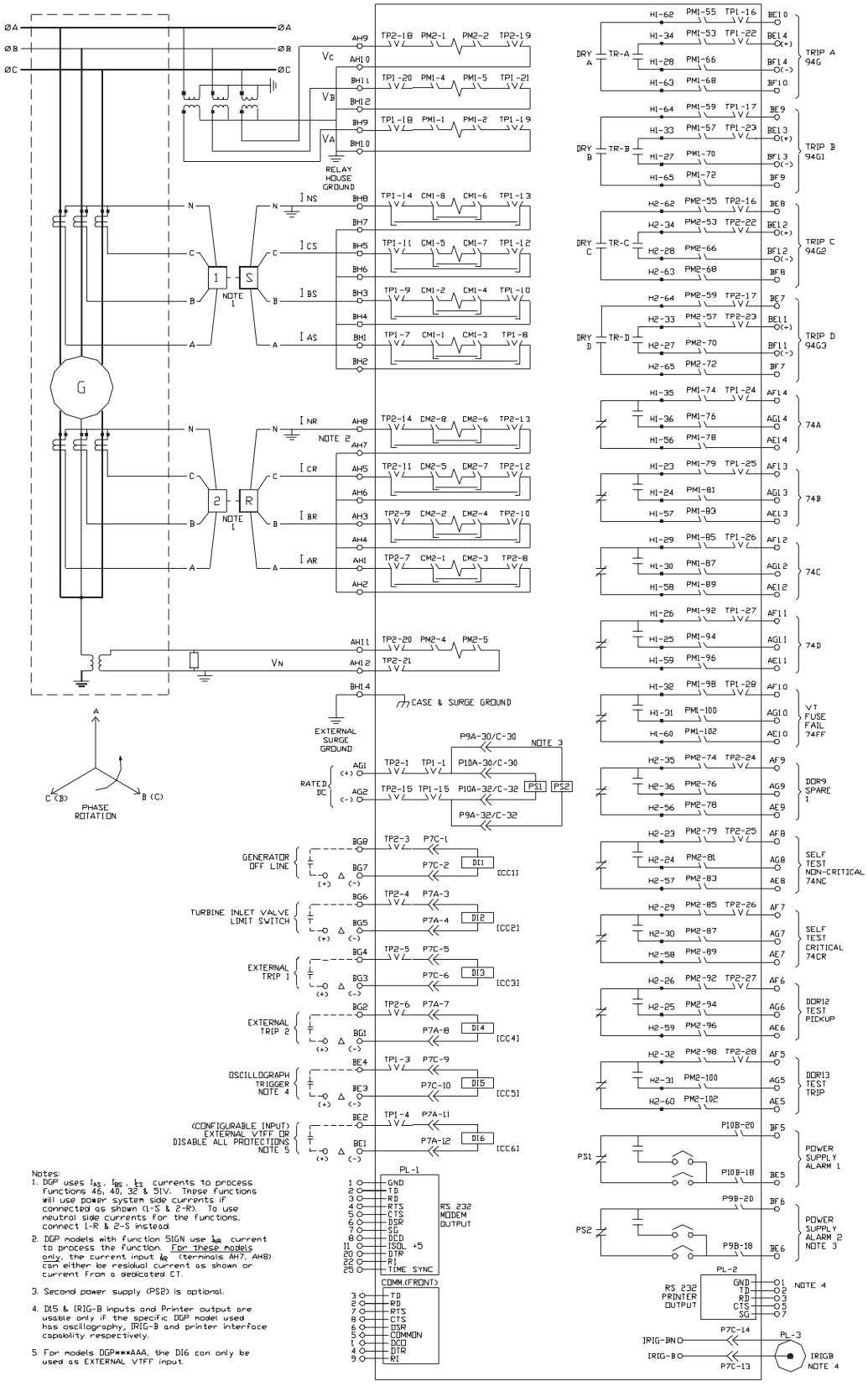

Figure 1–9: ELEMENTARY DIAGRAM WITH TEST BLOCKS, WYE VTs

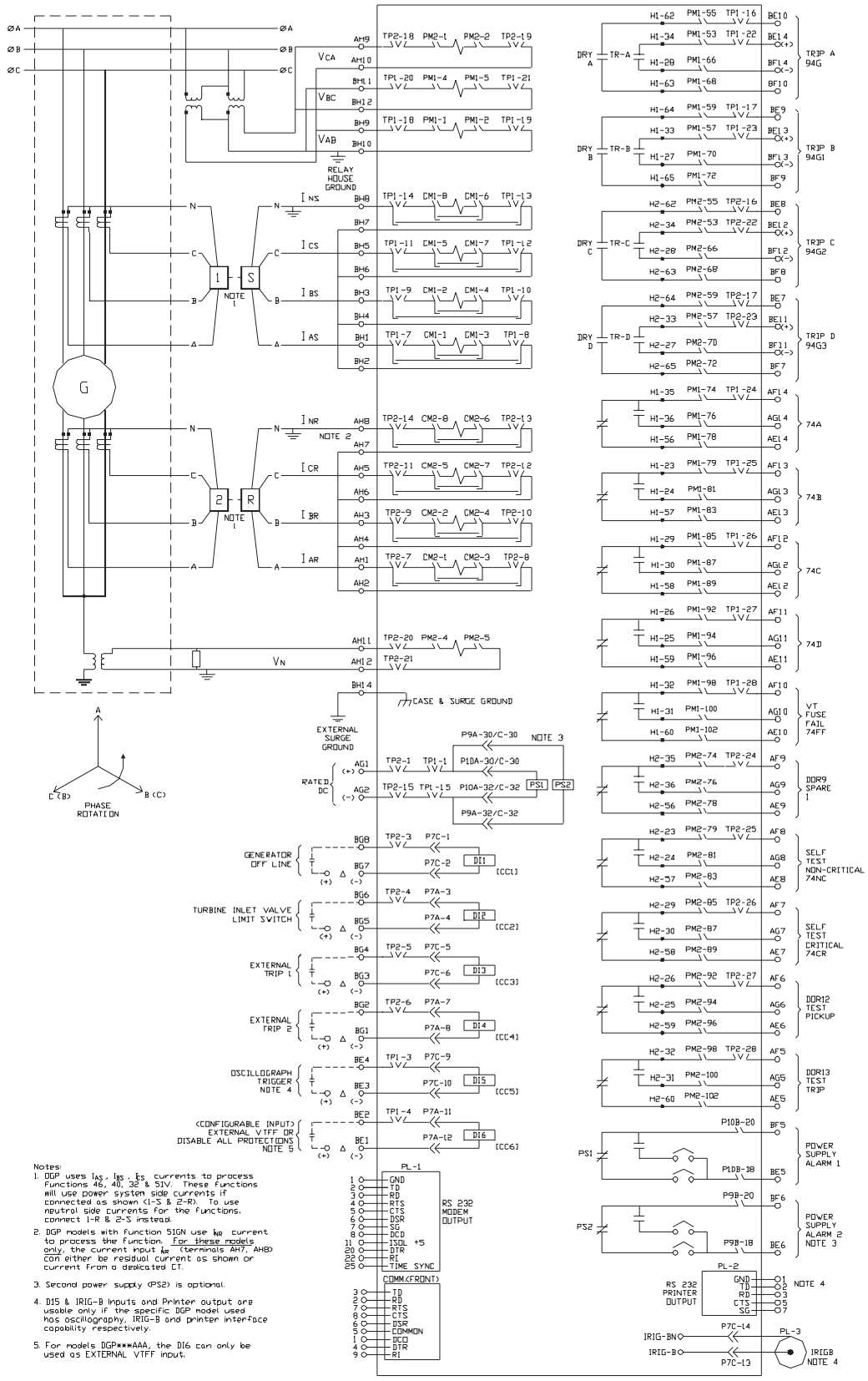

Figure 1–10: ELEMENTARY DIAGRAM WITH TEST BLOCKS, DELTA VTs

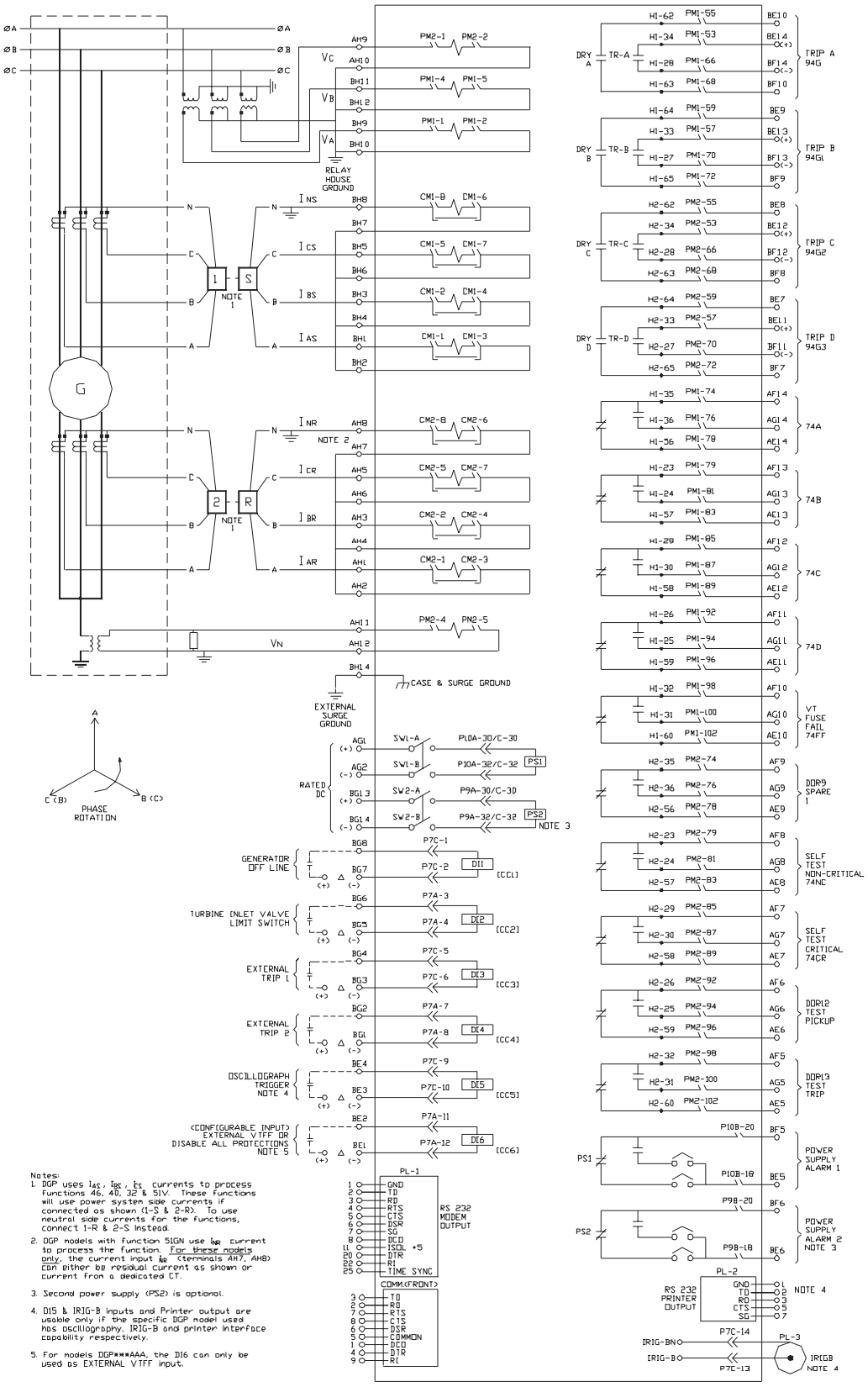

Figure 1–11: ELEMENTARY DIAGRAM WITHOUT TEST BLOCKS, WYE VTs

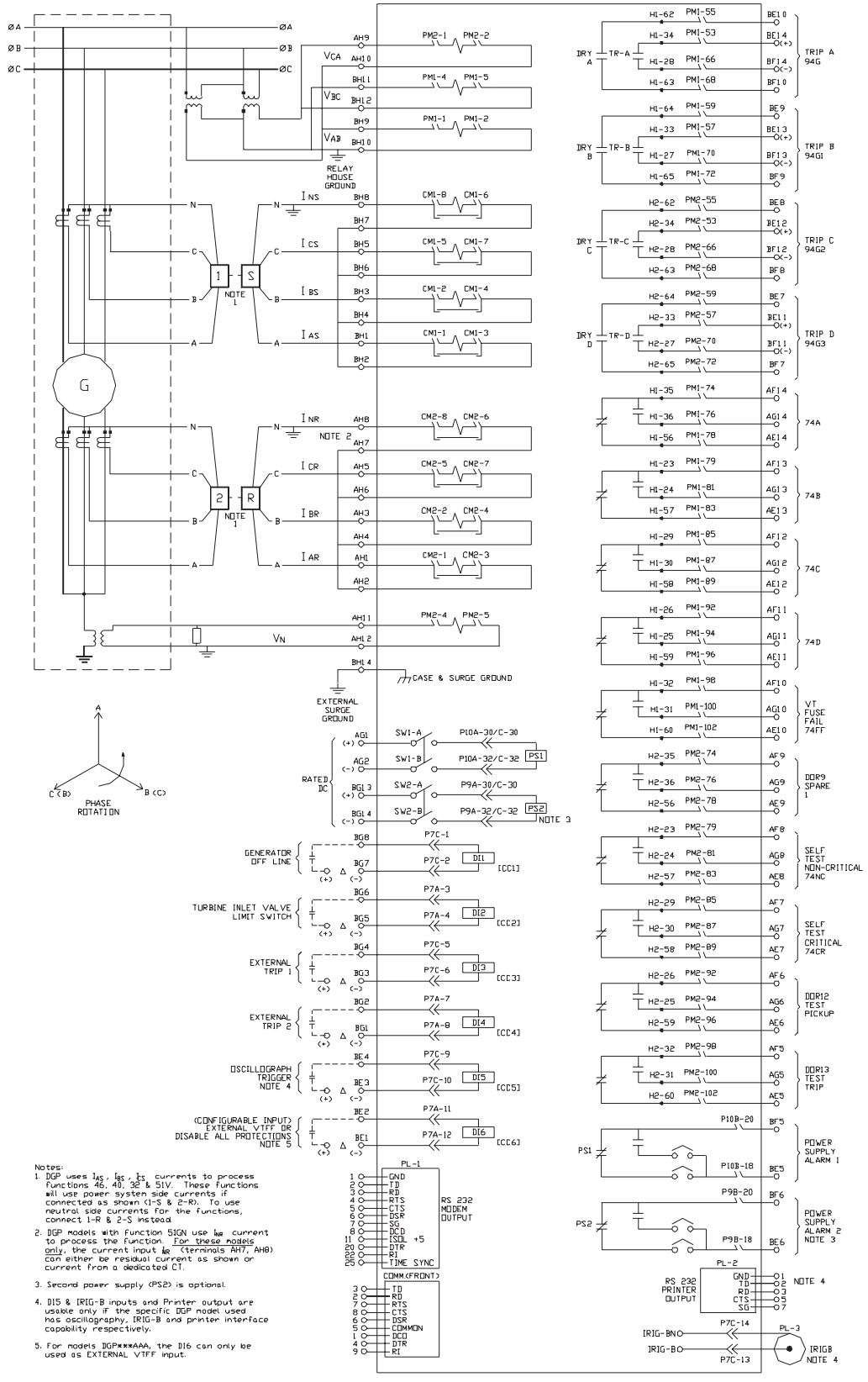

Figure 1–12: ELEMENTARY DIAGRAM WITHOUT TEST BLOCKS, DELTA VTs

1

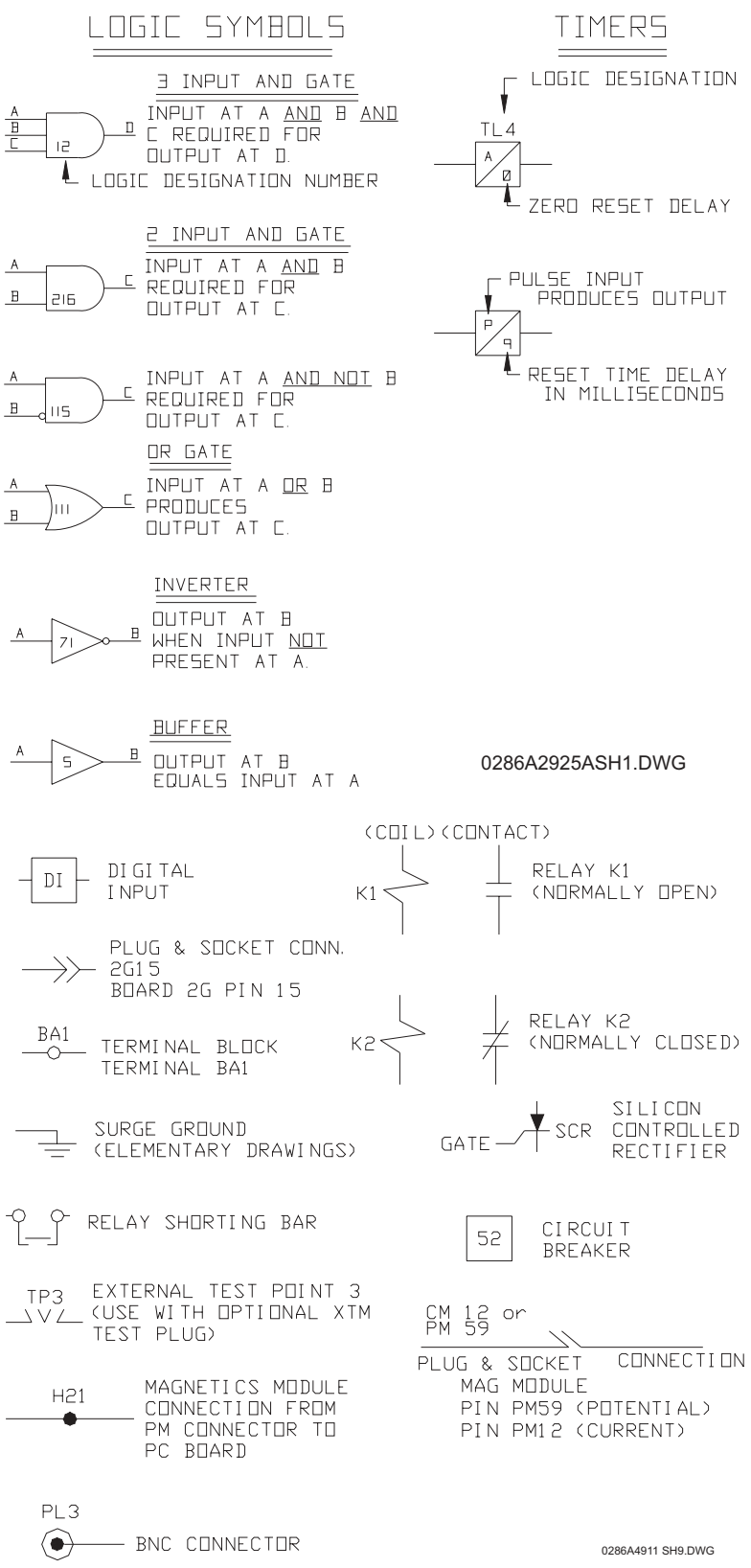

Figure 1–13: DIGITAL RELAY SYMBOL LEGEND

2.1.1 DESCRIPTION

This section provides information to assist the user in determining settings for the DGP™ generator protection system. Some settings are determined by the size and type of generator and the system to which it is connected, while other settings are the same regardless of the machine and/or system. Other settings may be set according to user preference.

Settings that are independent of system and machine size/type will be presented first, followed by machine and system-dependent settings. A blank setting form is provided (see Table 2–5: DGP***AAA SETTINGS TABLE on page 2–41) and may be used to record model number, PROM version number, and settings for specific applications.

Table 2–1: DGP SYSTEM SETTINGS & RATINGS on page 2–3 lists all the settings and the corresponding ranges and units. The column labeled DEFAULT indicates the DGP system settings stored in memory when shipped from the factory. The settings described in the subsequent sections are arranged by category, corresponding to the category headings on the light-emitting diode (LED) display of the local man-machine interface (MMI). Individual settings and category headings are listed by the descriptive name followed by its mnemonic. The DGP displays the mnemonic to identify a particular setting or category-of-setting heading.

In the following section, a set of example settings based on a typical generator system is presented. By no means does this presentation encompass all possible setting scenarios or calculations. It is provided as a demonstration for the setting methods and procedures to follow.

A sample generator system diagram is shown on the following page; it will be used to demonstrate the example settings for a typical DGP protection system.

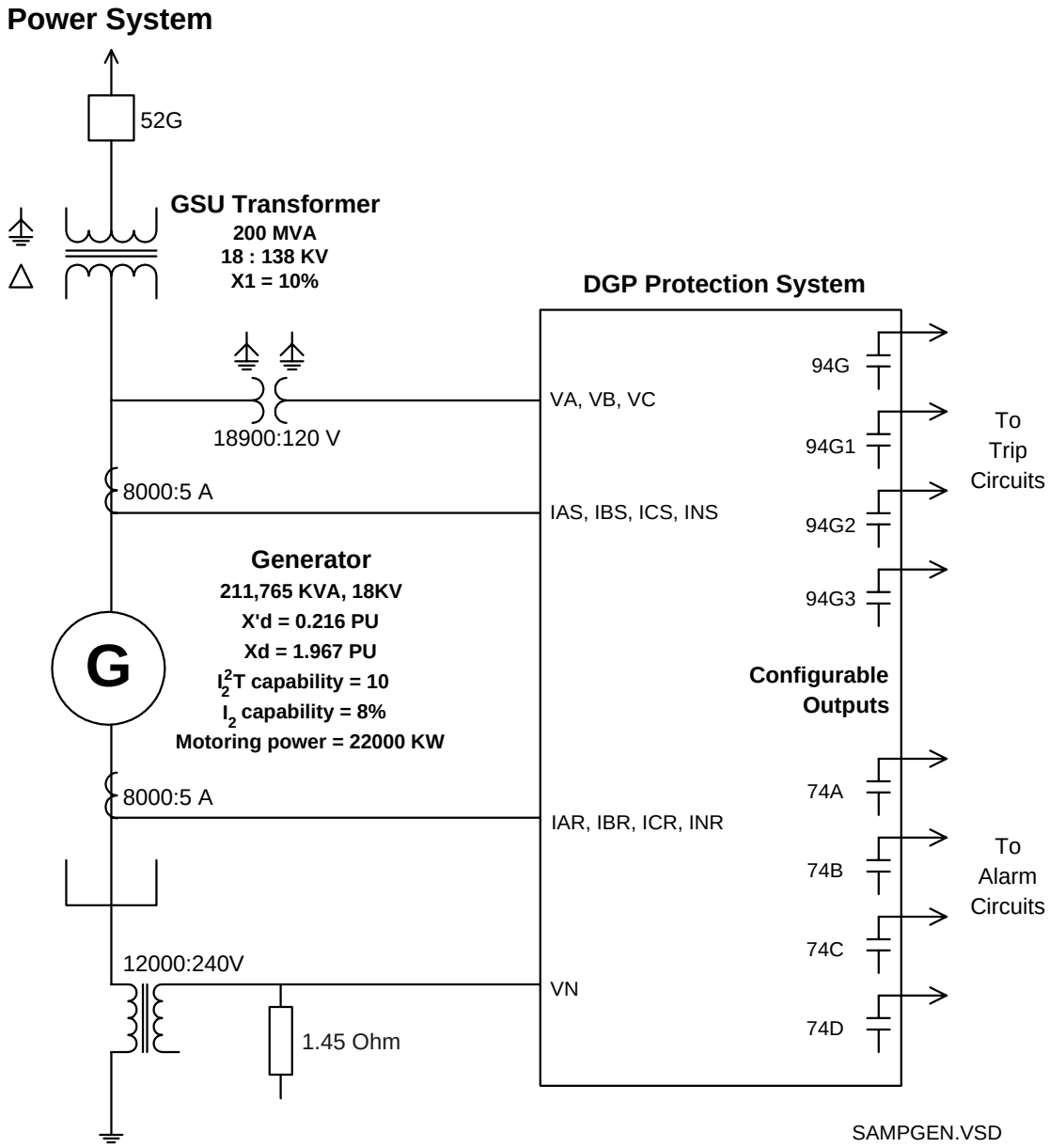

Figure 2–1: SAMPLE GENERATOR SYSTEM

Table 2–1: DGP SYSTEM SETTINGS & RATINGS (Sheet 1 of 7)

SETTING NUMBER	MNEMONIC	RANGE			DEFAULT	
		5 AMP	1 AMP	UNITS	5 AMP	1 AMP
CONFIGURATION: CONFIG						
101	UNITID	0 to 9999 (GEmodem protocol) 1 to 127 (Modbus protocol)		N/A	0 (GEmodem) 1 (Modbus)	
102	SYSFREQ	50 / 60		Hz	60	
103	SEL TVM	0000 to 1111		N/A	0000	
104	SEL TCM	0000 to 1111		N/A	0000	
105	SELPRIM	PRIMARY (0); SECNDRY (1)		N/A	SECNDRY	
106	CT RATIO	1 to 50000		N/A	1	
107	VT RATIO	1.0 to 240.0		N/A	1.0	
108	COMMPORT	Format: *xxyz*, where Baud Rate (*xx*): 03, 12, 24, 48, 96 (× 100) Parity (*y*): 0 (None), 1 (Odd), 2 (Even) Stop Bits (*z*): 1, 2		N/A	2401	
109 ①	PHASE	A-B-C (0); A-C-B (1)		NA	A-B-C	
110	TIMESYNC	INTRNL (0); IRIG-B (1)②; G-NET (2)		N/A	INTRNL	
111	NUM FLTS	1 to 3		N/A	3	
112 ②	PREFLT	1 to 20		cycles	20	
113 ②	OSC TRIG	DI ENA (0); DI DIS (1)		N/A	DI ENA	
114	NOM VOLT	100.0 to 225.0 ②③ / 100.0 to 140.0 ④		V	120.0	
115	RATEDCUR	0.10 to 9.99	0.02 to 1.99	A	5.00	1.00
116	VT CONN	WYE (0); DELTA (1)		N/A	WYE	
117 ③	NCTRATIO	1 to 50000		N/A	1	
STATOR DIFFERENTIAL: 87G						
201	TRIP	0000 to 1111		N/A	0000	
202	ALARM	0000 to 1111		N/A	0000	
203	K1	1.0 to 10.0		%	5.0	
204	PICKUP	0.20 to 1.00	0.04 to 2.00	A	0.30	0.06
CURRENT UNBALANCE – ALARM: 46A						
301	ALARM	0000 to 1111		N/A	0000	
302	PICKUP	0.05 to 2.99	0.01 to 0.60	A	0.05	0.01

① Set to match the system phase sequence. Setting informs the relay of actual system phase sequence, either ABC or ACB. CT and VT inputs labeled A, B, and C on the DGP must be connected to system phases A, B, and C for correct operation.
② Setting/value not available in DGP***ABA models.
③ Setting/value not available in DGP***AAA models.
④ Setting/value not available in DGP****CA models.

Table 2–1: DGP SYSTEM SETTINGS & RATINGS (Sheet 2 of 7)

SETTING NUMBER	MNEMONIC	RANGE			DEFAULT	
		5 AMP	1 AMP	UNITS	5 AMP	1 AMP
303	TL14	1 to 9		sec.	1	
CURRENT UNBALANCE – TRIP: 46T						
401	TRIP	0000 to 1111		N/A	0000	
402	ALARM	0000 to 1111		N/A	0000	
403	PICKUP	0.05 to 2.99	0.01 to 0.60	A	2.00	0.40
404	K2	1.0 to 45.0		sec.	1.0	
LOSS OF EXCITATION – SUPERVISION: 40						
501	SELV2SUP	DISABLE (0); ENABLE (1)		N/A	DISABLE	
LOSS OF EXCITATION – ZONE 1: 40-1						
601	TRIP	0000 to 1111		N/A	0000	
602	ALARM	0000 to 1111		N/A	0000	
603	CENTER	2.50 to 60.00	12.5 to 300.00	Ω	11.00	55.00
604	RADIUS	2.50 to 60.00	12.5 to 300.00	Ω	8.50	42.50
605	TL12	0.01 to 9.99		sec.	0.01	
LOSS OF EXCITATION – ZONE 2: 40-2						
701	TRIP	0000 to 1111		N/A	0000	
702	ALARM	0000 to 1111		N/A	0000	
703	CENTER	2.50 to 60.00	12.50 to 300.0	Ω	11.00	55.00
704	RADIUS	2.50 to 60.00	12.50 to 300.0	Ω	8.50	42.50
705	TL13	0.01 to 9.99		sec.	0.01	
ANTI-MOTORING #1: 32-1						
801	TRIP	0000 to 1111		N/A	0000	
802	ALARM	0000 to 1111		N/A	0000	
803	SQ TR EN	YES [1/Y]; NO [3/N]		N/A	YES	
804	REV PWR	0.5 to 99.9	0.1 to 19.9	W	1.5	0.3
805	TL1	1 to 120		sec.	5	
ANTI-MOTORING #2: 32-2						
901 ②	TRIP	0000 to 1111		N/A	0000	

① Set to match the system phase sequence. Setting informs the relay of actual system phase sequence, either ABC or ACB. CT and VT inputs labeled A, B, and C on the DGP must be connected to system phases A, B, and C for correct operation.
② Setting/value not available in DGP***ABA models.
③ Setting/value not available in DGP***AAA models.
④ Setting/value not available in DGP****CA models.

Table 2–1: DGP SYSTEM SETTINGS & RATINGS (Sheet 3 of 7)

SETTING NUMBER	MNEMONIC	RANGE			DEFAULT	
		5 AMP	1 AMP	UNITS	5 AMP	1 AMP
902 ②	ALARM	0000 to 1111		N/A	0000	
903 ②	REV PWR	0.5 to 99.9	0.1 to 19.9	W	1.5	0.3
904 ②	TL2	1 to 60		sec.	1	
OVERCURRENT WITH VOLTAGE RESTRAINT: 51V						
1001	TRIP	0000 to 1111		N/A	0000	
1002	ALARM	0000 to 1111		N/A	0000	
1003	PICKUP	0.5 to 16.0	0.1 to 3.2	A	0.5	0.1
1004	TIME FAC	0.10 to 99.99		sec.	0.10	
STATOR GROUND – ZONE 1: 64G1						
1101	TRIP	0000 to 1111		N/A	0000	
1102	ALARM	0000 to 1111		N/A	0000	
1103	PICKUP	4.0 to 40.0		V	4.0	
1104	TL4	0.1 to 9.9		sec.	0.1	
STATOR GROUND – ZONE 2: 64G2						
1201 ②	TRIP	0000 to 1111		N/A	0000	
1202 ②	ALARM	0000 to 1111		N/A	0000	
1203 ②	TL5	0.1 to 9.9		sec.	0.1	
OVEREXCITATION – ALARM: 24A						
1301	ALARM	0000 to 1111		N/A	0000	
1302	PICKUP	1.0 to 1.99		per unit	1.50	
1303	TL6	0 to 9.9		sec.	1.0	
OVEREXCITATION – TRIP: 24T						
1401	TRIP ON (-line)	0000 to 1111		N/A	0000	
1402	TRIP OFF (-line)	0000 to 1111		N/A	0000	
1403	ALARM	0000 to 1111		N/A	0000	
1404	CURVE #	1 to 4		N/A	1	
1405	INV PU	1.00 to 1.99		per unit	1.50	
1406	TIME FAC	0.10 to 99.99		sec.	99.99	

① Set to match the system phase sequence. Setting informs the relay of actual system phase sequence, either ABC or ACB. CT and VT inputs labeled A, B, and C on the DGP must be connected to system phases A, B, and C for correct operation.
② Setting/value not available in DGP***ABA models.
③ Setting/value not available in DGP***AAA models.
④ Setting/value not available in DGP****CA models.

Table 2–1: DGP SYSTEM SETTINGS & RATINGS (Sheet 4 of 7)

SETTING NUMBER	MNEMONIC	RANGE			DEFAULT	
		5 AMP	1 AMP	UNITS	5 AMP	1 AMP
1407	INST PU	1.00 to 1.99		per unit	1.50	
1408	TL7	0 to 9.9		sec.	1.0	
1409	RESET	0 to 999		sec.	1	
OVERVOLTAGE: 59						
1501	TRIP	0000 to 1111		N/A	0000	
1502	ALARM	0000 to 1111		N/A	0000	
1503	INV PICKUP	100 to 350 ②③ / 100 to 200 ④		V	120	
1504	TIME FAC	0.10 to 99.99		sec.	1.00	
1505 ③	CURVE #	1 (Inverse); 2 (Definite Time)		N/A	1	
1506 ②③	INST PU	100 to 400		V	240	
OVER/UNDER FREQUENCY VOLTAGE CUTOFF 81						
1601	UVCUTOFF	35 to 99		%	90	
UNDERFREQUENCY SETPOINT 1: 81-1U						
1701	TRIP	0000 to 1111		N/A	0000	
1702	ALARM	0000 to 1111		N/A	0000	
1703	SET PNT	40.00 to 65.00		Hz	60.00	
1704	TL8	0.1 to 999.9		sec.	2.0	
UNDERFREQUENCY SETPOINT 2: 81-2U						
1801	TRIP	0000 to 1111		N/A	0000	
1802	ALARM	0000 to 1111		N/A	0000	
1803	SET PNT	40.00 to 65.00		Hz	60.00	
1804	TL9	0.05 to 99.99		sec.	2.00	
UNDERFREQUENCY SETPOINT 3: 81-3U						
1901 ②	TRIP	0000 to 1111		N/A	0000	
1902 ②	ALARM	0000 to 1111		N/A	0000	
1903 ②	SET PNT	40.00 to 65.00		Hz	60.00	
1904 ②	TL10	0.05 to 99.99		sec.	2.00	

① Set to match the system phase sequence. Setting informs the relay of actual system phase sequence, either ABC or ACB. CT and VT inputs labeled A, B, and C on the DGP must be connected to system phases A, B, and C for correct operation.
② Setting/value not available in DGP***ABA models.
③ Setting/value not available in DGP***AAA models.
④ Setting/value not available in DGP****CA models.

Table 2–1: DGP SYSTEM SETTINGS & RATINGS (Sheet 5 of 7)

SETTING NUMBER	MNEMONIC	RANGE			DEFAULT	
		5 AMP	1 AMP	UNITS	5 AMP	1 AMP
UNDERFREQUENCY SETPOINT 1: 81-4U						
2001 ②	TRIP	0000 to 1111		N/A	0000	
2002 ②	ALARM	0000 to 1111		N/A	0000	
2003 ②	SET PNT	40.00 to 65.00		Hz	60.00	
2004 ②	TL11	0.05 to 99.99		sec.	2.00	
OVERFREQUENCY SETPOINT 1: 81-1O						
2101	TRIP	0000 to 1111		N/A	0000	
2102	ALARM	0000 to 1111		N/A	0000	
2103	SET PNT	45.00 to 79.99		Hz	60.00	
2104	TL15	0.05 to 99.99		sec.	2.00	
OVERFREQUENCY SETPOINT 2: 81-2O						
2201	TRIP	0000 to 1111		N/A	0000	
2202	ALARM	0000 to 1111		N/A	0000	
2203	SET PNT	45.00 to 79.99		Hz	60.00	
2204	TL16	0.05 to 99.99		sec.	2.00	
OVERFREQUENCY SETPOINT 3: 81-3O						
2301 ②④	TRIP	0000 to 1111		N/A	0000	
2302 ②④	ALARM	0000 to 1111		N/A	0000	
2303 ②④	SET PNT	45.00 to 79.99		Hz	60.00	
2304 ②④	TL17	0.05 to 99.99		sec.	2.00	
OVERFREQUENCY SETPOINT 4: 81-4O						
2401 ②④	TRIP	0000 to 1111		N/A	0000	
2402 ②④	ALARM	0000 to 1111		N/A	0000	
2403 ②④	SET PNT	45.00 to 79.99		Hz	60.00	
2404 ②④	TL18	0.05 to 99.99		sec.	2.00	
DIGITAL INPUT: DIG INP						
2501	SELBKDI1	NO BLK (0); BLK #1-9 (1-9)		N/A	NO BLK	
2502	DI3 TRIP	0000 to 1111		N/A	0000	

① Set to match the system phase sequence. Setting informs the relay of actual system phase sequence, either ABC or ACB. CT and VT inputs labeled A, B, and C on the DGP must be connected to system phases A, B, and C for correct operation.
② Setting/value not available in DGP***ABA models.
③ Setting/value not available in DGP***AAA models.
④ Setting/value not available in DGP****CA models.

Table 2–1: DGP SYSTEM SETTINGS & RATINGS (Sheet 6 of 7)

SETTING NUMBER	MNEMONIC	RANGE		UNITS	DEFAULT	
		5 AMP	1 AMP		5 AMP	1 AMP
2503	DI3 ALRM	0000 to 1111		N/A	0000	
2504 ②⑤	DI3 TIMR③	0.00 to 9.99		sec.	0.01	
2505 (2504⑤)	DI4 TRIP	0000 to 1111		N/A	0000	
2506 (2505⑤)	DI4 ALRM	0000 to 1111		N/A	0000	
2507 ②③	DI4 TIMR	0.00 to 9.99		sec.	0.01	
2508 ③	DI6 FUNC	EXTVTFF (0); DISPROT (1)		N/A	EXTVTFF	
VOLTAGE TRANSFORMER FUSE FAILURE: VTFF						
2601	VTFF	DISABLE (0); ENABLE (1)		N/A	DISABLE	
ACCIDENTAL ENERGIZATION: AE						
2701	TRIP	0000 to 1111		N/A	0000	
2702	ALARM	0000 to 1111		N/A	0000	
2703	AE ARM	AND (0); OR (1)		N/A	AND	
GROUND OVERCURRENT: 51GN						
2801 ③	TRIP	0000 to 1111		N/A	0000	
2802 ③	ALARM	0000 to 1111		N/A	0000	
2803 ③	PICKUP	0.10 to 5.00	0.02 to 1.00	A	0.50	0.10
2804 ③	TIME FAC	0.10 to 99.99		sec.	1.00	
UNDERVOLTAGE: 27						
2901 ③	TRIP	0000 to 1111		N/A	0000	
2902 ③	ALARM	0000 to 1111		N/A	0000	
2903 ③	PICKUP	40 to 210 ②		V	100	
2903 ③	PICKUP	40 to 120 ④		V	100	
2904 ③	TIME FAC	0.1 to 99.99		sec.	1.00	
2905 ③	CURVE #	1 (Inverse); 2 (Definite Time)		N/A	1	
UNDERVOLTAGE – THIRD HARMONIC: 27TN						
3001 ③	TRIP	0000 to 1111		N/A	0000	
3002 ③	ALARM	0000 to 1111		N/A	0000	

① Set to match the system phase sequence. Setting informs the relay of actual system phase sequence, either ABC or ACB. CT and VT inputs labeled A, B, and C on the DGP must be connected to system phases A, B, and C for correct operation.
② Setting/value not available in DGP***ABA models.
③ Setting/value not available in DGP***AAA models.
④ Setting/value not available in DGP****CA models.

Table 2–1: DGP SYSTEM SETTINGS & RATINGS (Sheet 7 of 7)

SETTING NUMBER	MNEMONIC	RANGE			DEFAULT	
		5 AMP	1 AMP	UNITS	5 AMP	1 AMP
3003 ③	PICKUP	0.1 to 9.9		V	0.9	
3004 ③	TL20	0.5 to 99.9		sec.	2.0	
3005 ③	FORPWR-L	0 to 999	0 to 200	W	10	1
3006 ③	FORPWR-H	0 to 999	0 to 200	Watt	20	1

① Set to match the system phase sequence. Setting informs the relay of actual system phase sequence, either ABC or ACB. CT and VT inputs labeled A, B, and C on the DGP must be connected to system phases A, B, and C for correct operation.
② Setting/value not available in DGP***ABA models.
③ Setting/value not available in DGP***AAA models.
④ Setting/value not available in DGP****CA models.

101: UNITID – UNIT ID NUMBER

UNITID is a decimal number between 0 and 9999 (for units with GE Modem protocol only) or 1 to 127 (for units with Modbus protocol) stored in non-volatile memory that uniquely identifies a DGP relay system. When the DGP is accessed via one of its serial ports, the **UNITID** is required to establish communication, thus providing a measure of security. **UNITID** can only be changed via the local MMI. It is not possible to change **UNITID** with the DGP-PC communication software.

102: SYSFREQ – SYSTEM FREQUENCY

SYSFREQ can be set to either 50 Hz or 60 Hz.

103: SEL TVM – SELECT TRIP VOLTAGE MONITORING

One contact of each of the four trip output relays can be monitored for DC voltage. The monitoring is enabled or disabled by setting **SEL TVM** to 1 or 0, respectively. The four-digit code of the **SEL TVM** setting applies to 94G, 94G1, 94G2, and 94G3, in that order. For example, a setting of 1100 enables trip voltage monitoring for 94G and 94G1 and disables for 94G2 and 94G3.

The monitoring of all unused contacts should be disabled to avoid nuisance alarms.

104: SEL TCM – SELECT TRIP CURRENT MONITORING

The four trip contacts described above for the **SEL TVM** can also be monitored for DC current when a trip signal is issued. This monitoring is enabled or disabled by setting **SEL TCM** to 1 or 0, respectively. The four-digit code of the **SEL TCM** setting applies to 94G, 94G1, 94G2, and 94G3, in that order. If the trip current through any of the monitored contacts is not expected to be above 150 mA, or if any of the trip circuit is not interrupted externally, it should be disabled to avoid nuisance sequence-of-event points or seal-in of the output relay.

For example, a setting of 1000 enables TCM for 94G and disables for 94G1, 94G2, and 94G3.

105: SELPRIM – SELECT PRIMARY/SECONDARY UNITS

SELPRIM can be set to either 0 (PRIMARY) or 1 (SECNDRY). This setting determines whether the present values (currents, voltages, watts, and vars) are displayed and stored as primary or secondary values. All user-entered settings are expressed in terms of secondary values, regardless of the **SELPRIM** setting.

106: CT RATIO – CURRENT TRANSFORMER RATIO

CT RATIO can be set from 1 to 50000. This setting applies to all current inputs with a possible exception of current $I_{NR.}$ If Setting 117: **NCTRATIO** is provided, then it applies to the current I_{NR}. Refer to the Neutral Current Transformer Ratio (Setting 117: **NCTRATIO**) described later.

For the sample generator system, $\text{CT RATIO} = \frac{8000}{5} = 1600$

107: VT RATIO – VOLTAGE TRANSFORMER RATIO

VT RATIO can be set from 1.0 to 240.0.

For the sample generator system, $\text{VT RATIO} = \frac{18900}{120} = 157.5$

108: COMMPORT – COMMUNICATIONS PORT

COMMPORT sets the baud rate, parity, and stop bits of the RS232 serial port. The setting format is a four-digit number *xxyz*, where:

Baud Rate = *xx* = 03, 12, 24, 48, 96 (× 100)
Parity = *y* = 0 (None), 1 (Odd), 2 (Even)
Stop Bits = *z* = 1, 2

The baud rate setting of 300, 1200, 2400, 4800, or 9600 must match the baud rate of the modem or serial device connected to the RS232 serial ports. The parity and stop bits must match those selected for the serial port of the remote PC. Normally, 1 stop bit is selected. However, certain modems or other communications hardware might dictate using 2 stop bits. DGP-PC communications software can be configured to match the DGP setting for baud rate, parity, and stop bits.

COMMPORT can only be changed via the DGP keypad. It cannot be changed with DGP-PC communications software.

109: PHASE – PHASE DESIGNATION

PHASE can be set to either A-B-C or A-C-B to match the positive-sequence phase rotation for the generator system where the DGP is installed. This setting informs the relay of the actual system phase sequence, either A-B-C or A-C-B. The CT and VT inputs on the relay, labeled as A, B, and C, must be connected to system phases A, B, and C for correct operation. This setting permits the DGP to properly compute and report the sequence-dependent quantities.

110: TIMESYNC – TIME SYNCHRONIZATION SOURCE

TIMESYNC determines the method of synchronizing the DGP system's internal clock. It can be set to 0 (INTERNAL), 1 (optional, IRIG-B), or 2 (G-NET). **TIMESYNC** = 0 lets the clock run freely from the internal oscillator. **TIMESYNC** = 1 synchronizes the clock using an IRIG-B signal connected directly to the DGP via port PL-3. **TIMESYNC** = 2 synchronizes the clock using a signal on pin 25 of RS232 port PL-1 when connected to a G-NET host computer.

111: NUM FLTS – NUMBER OF FAULT EVENTS

NUM FLTS selects the maximum number of fault reports and optional oscillography data that may be stored in memory without overwriting, and can be set to 1, 2, or 3. When the maximum number are stored in memory, the fault report and the oscillography data associated with a subsequent storage event will overwrite the data from the oldest event.

This setting also apportions a fixed amount of memory into different sized blocks for oscillography storage. The following tabulation shows the total number of oscillography cycles allowed per storage event as a function of **NUM FLTS**.

NUM FLTS	STORAGE CYCLES
1	120
2	60
3	40

CAUTION

To avoid loss of fault data stored in the DGP, upload and save the data before changing this setting.

112: PREFLT – PREFAULT CYCLES

PREFLT selects the number of pre-trigger (or pre-fault) cycles in each oscillography data set. It can be set from 1 to 20. Setting 111: **NUM FLTS** determines the total number of cycles per storage event, as explained above, and **PREFLT** determines how many of these are pre-trigger cycles.

113: OSC TRIG – EXTERNAL OSCILLOGRAPHY TRIGGER

A DGP system trip always causes oscillography to be stored. **OSC TRIG** enables or disables an additional oscillography trigger by an external digital input (DI5). Refer to Section 1.4.9: FAULT REPORT & OSCILLOGRAPHY DATA on page 1–22 for further explanation. **OSC TRIG** may be set to 0 (DI ENA) or 1 (DI DIS).

114: NOM VOLT – NOMINAL VOLTAGE

NOM VOLT can be set from 100.0 to 140.0 V (phase-to-phase).

For the sample generator system,

$$\text{NOM VOLT} = \frac{18000}{(18900/120)} = 114.3 \text{ V}$$

115: RATEDCUR – RATED CURRENT

RATEDCUR can be set from 0.10 to 9.99 A (0.02 to 1.99 A for models with 1 A rating).

For the sample generator system,

$$\text{RATEDCUR} = \frac{211765}{(1.732 \times 18)(8000/5)} = 4.25 \text{ A}$$

116: VT CONN – VOLTAGE TRANSFORMER CONNECTION

VT CONN may be set to 0 (WYE) or 1 (DELTA). **VT CONN** must be set to identify the VT connections that supply AC voltage to the DGP.

117: NCTRATIO – NEUTRAL CURRENT TRANSFORMER RATIO

NCTRATIO setting is available in all DGP models except DGP***AAA. It can be set from 1 to 50000. This setting applies to I_{NR} current only; refer to Current Transformer Ratio (Setting 106: **CT RATIO**) for the CT ratio setting of other current inputs.

For the sample generator system,

$$\text{NCTRATIO} = \frac{8000}{5} = 1600$$

2.2.2 EXAMPLE CONFIGURATION SETTINGS

Example Settings (based on Figure 2–1: SAMPLE GENERATOR SYSTEM):

UNITID =1
SYSFREQ = 60
SEL TVM = as required
SEL TCM = as required
SELPRIM = PRIMARY (0)
CT RATIO = 1600
VT RATIO = 157.5
COMMPORT = 2401
PHASE = A-B-C (0)
TIMESYNC = INTRNL (0)
NUM FLTS = 3
NOM VOLT = 114.3 volts
RATEDCUR = 4.25 amps
VT CONN = WYE (0)
NCTRATIO = 1600

2.3.1 TRIP AND ALARM OUTPUT RELAYS

There are eight user-configurable output relays included in the DGP system. Four of these are high-speed relays intended for tripping and four are standard-speed relays intended for alarm. Each of the protection functions described below includes two four-digit settings, **TRIP** and **ALARM**, which configure the function to operate any number of these relays. An output relay is selected or de-selected by setting a code to 1 or 0, respectively. The four-digit code of the **TRIP** setting applies to the 94G, 94G1, 94G2, and 94G3 relays, in that order. The four digit code of the **ALARM** setting applies to the 74A, 74B, 74C, and 74D relays, in that order.

Any number of the protection functions can be disabled by setting *both* the **TRIP** and **ALARM** codes for the function or functions to 0000.

The configurable trip and alarm outputs can be used to customize the DGP in accordance with a number of user-defined trip and alarm strategies.

2.3.2 STATOR DIFFERENTIAL 87G

Algorithm: Function 87G operates when the following inequality is met:

$$\left|\overline{I}_1 - \overline{I}_2\right|^2 > K(\overline{I}_1 \cdot \overline{I}_2)$$

where: $\overline{I}_1$ = Generator return-side phase current

$\overline{I}_2$ = Generator system-side phase current

K = an adaptive variable = K1/100 if $\left|\overline{I}_1 \cdot \overline{I}_2\right| \le 81$

= 15 × K1/100 if $\left|\overline{I}_1 \cdot \overline{I}_2\right| > 81$

where K1 = 87G K1 setting in percent (Setting 203: **K1**)

1. The algorithm is processed only if

$$\left|\overline{I}_1 - \overline{I}_2\right| > \text{87G PICKUP}$$

2. The algorithm is processed separately for each phase.
3. The initial characteristic slope can be calculated using the formula:

$$\%\ \text{slope} = 100 \cdot \sqrt{\frac{\text{K1}}{100}}$$

Characteristics: The following four graphs show the curves for selected values of Setting 203: **K1** and 204: **PICKUP**. The curve for any combination of the 203: **K1** and 204: **PICKUP** settings can be derived using the algorithm above.

This function should be set as sensitive as practical, keeping adequate margin for CT errors under all through-load and through-fault current conditions. **K1** and **PICKUP** settings of 2% and 0.3 A, respectively, are recommended for most applications where the system and neutral side CTs are of identical design. Higher settings must be considered if the CTs are not of identical design or if a higher CT error margin is desired.

For the sample generator system, set **K1** = 2% and **PICKUP** = 0.3 A.

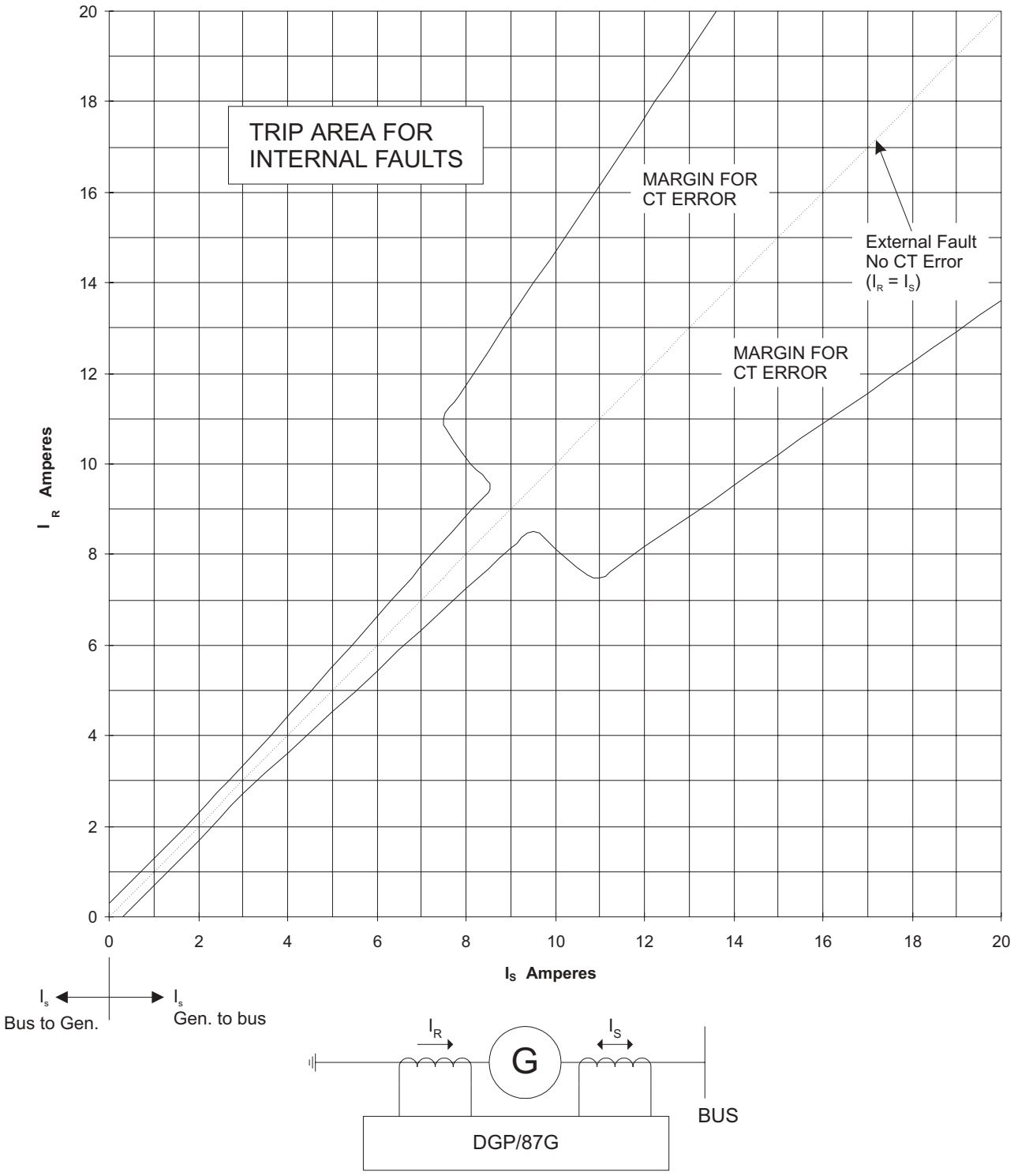

Figure 2–2: 87G CHARACTERISTICS – K1 = 1%, PICKUP = 0.3 A

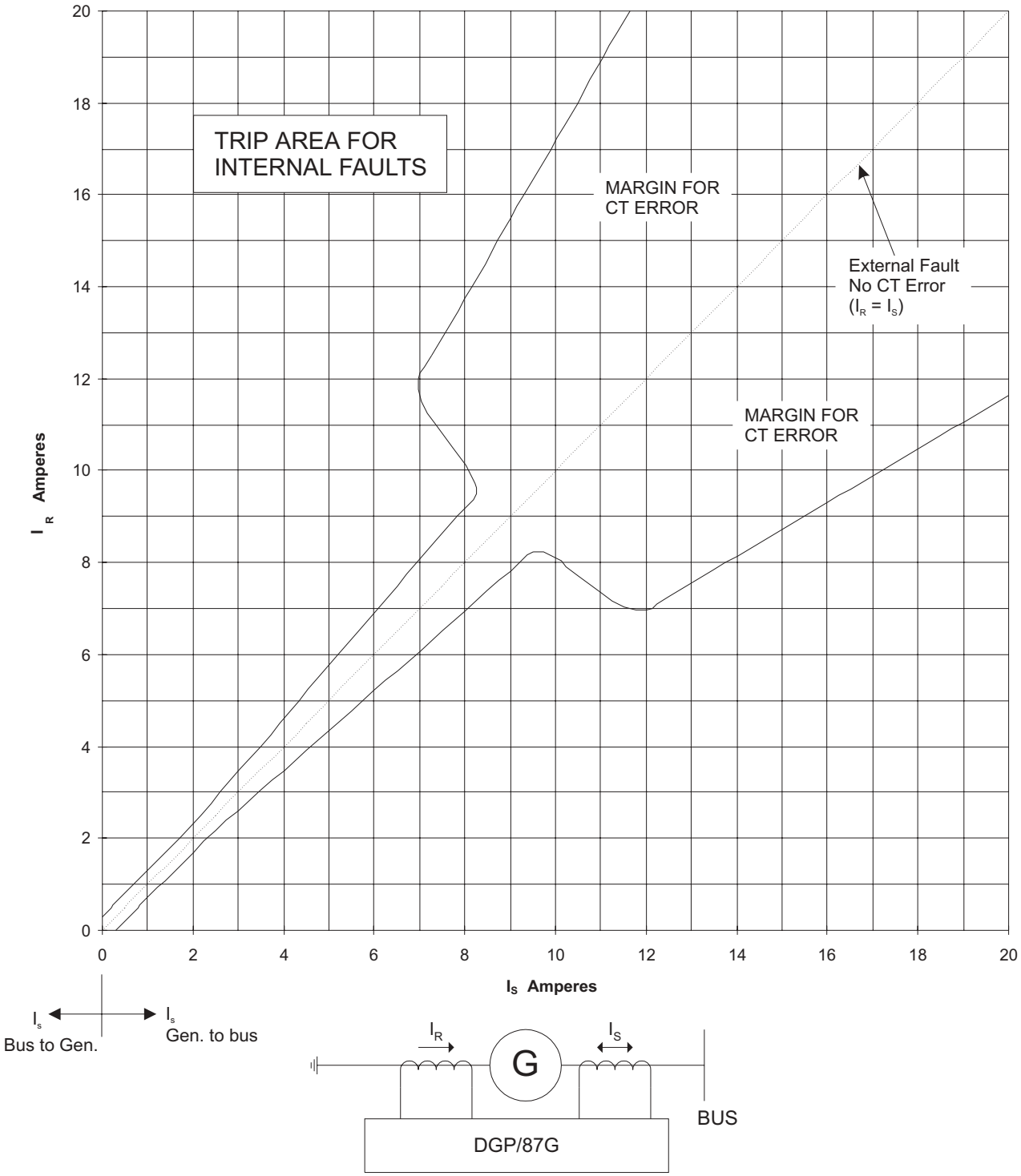

Figure 2–3: 87G CHARACTERISTICS – K1 = 2%, PICKUP = 0.3 A

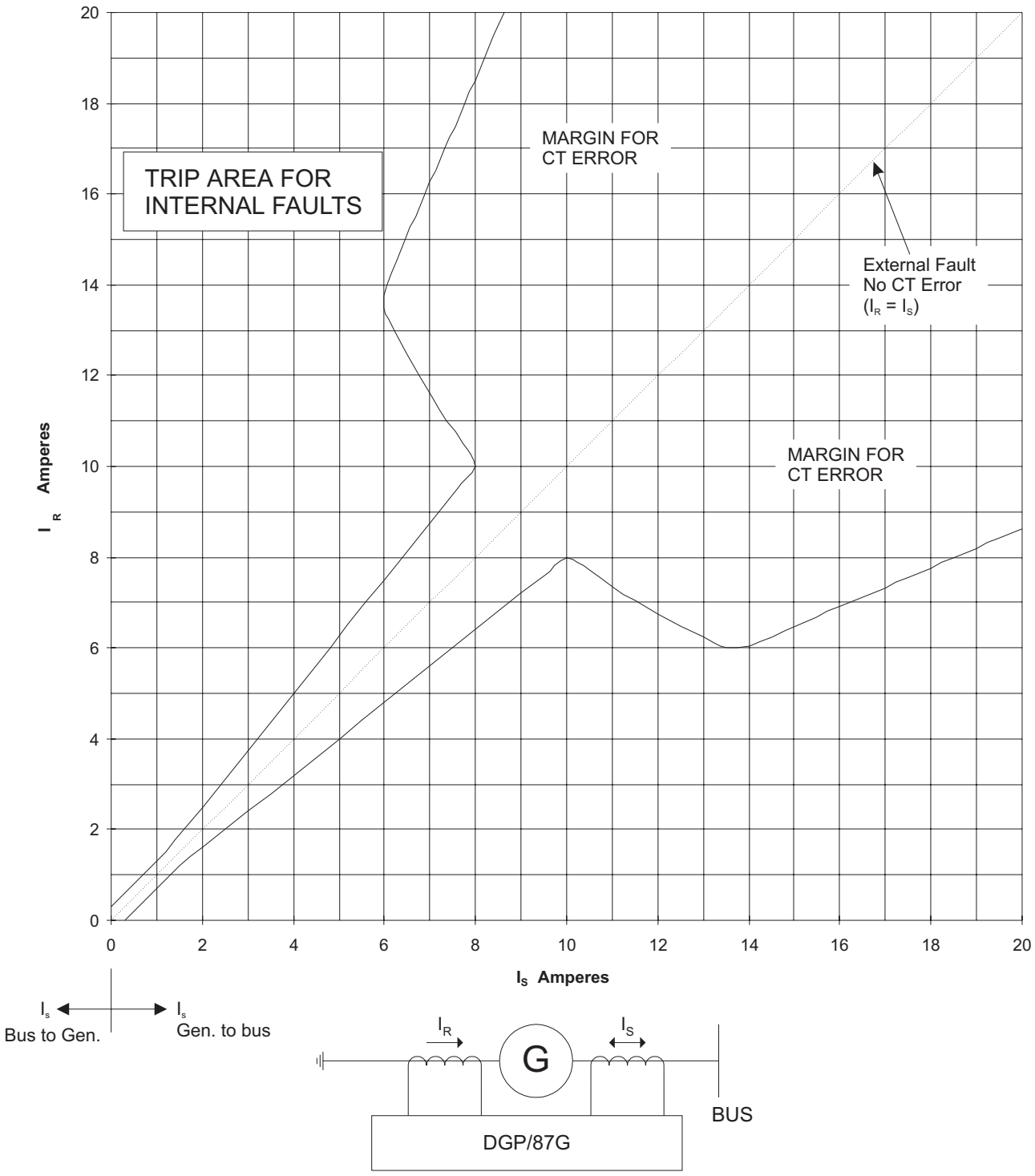

Figure 2–4: 87G CHARACTERISTICS – K1 = 5%, PICKUP = 0.3 A

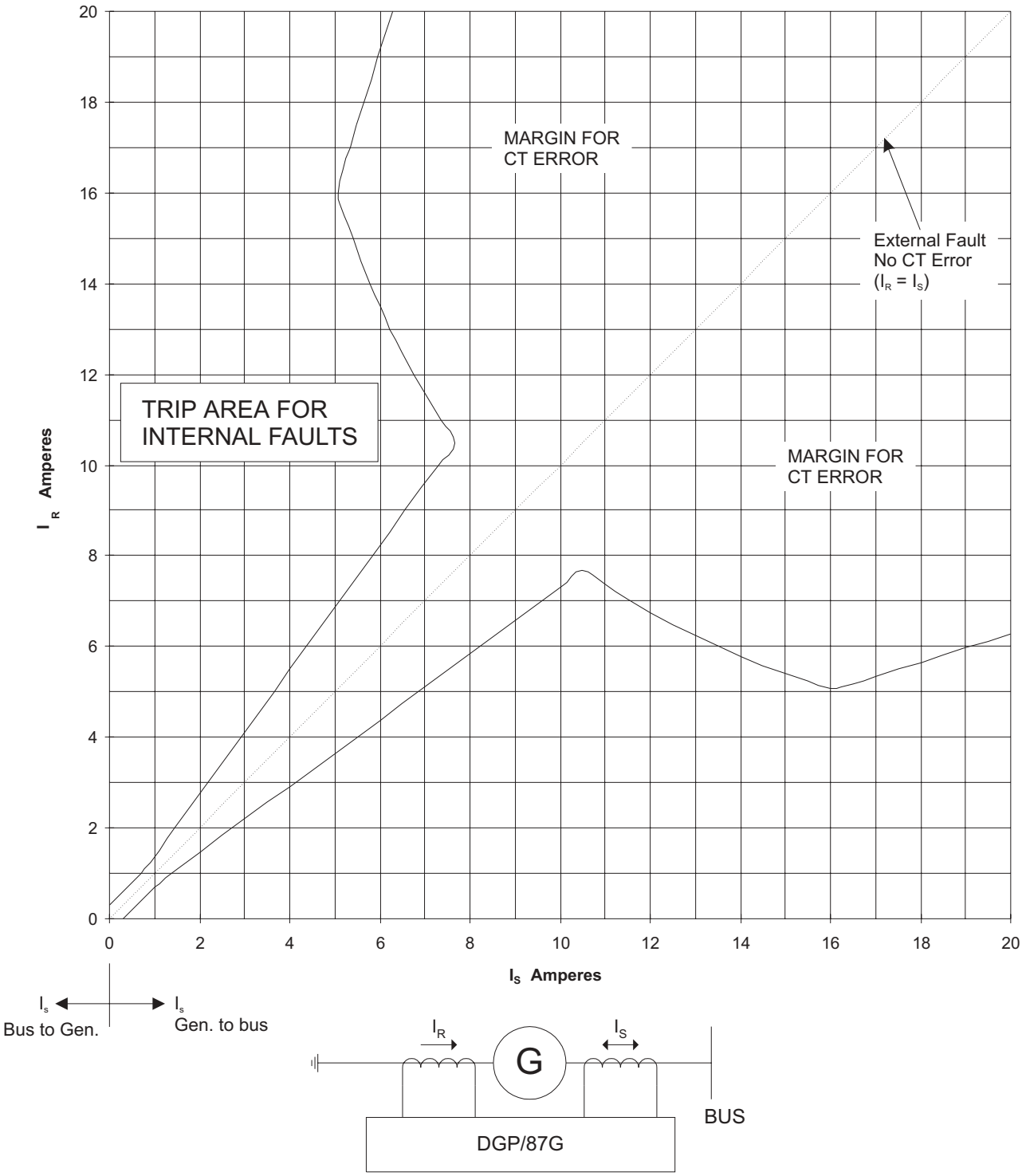

Figure 2–5: 87G CHARACTERISTICS – K1 = 10%, PICKUP = 0.3 A

2.3.3 CURRENT UNBALANCE ALARM 46A

This function is intended to alarm prior to a 46T trip to enable an operator to take corrective action. Setting 302: **PICKUP** should be a safe margin below the generator's allowable continuous negative-sequence current.

For the sample generator system,

set 302: PICKUP = 70% of I_2 capability of the machine

$$= \frac{0.7 \times 0.08 \times 211765}{1.732 \times 18}$$

$$= 380.4 \text{ A primary}$$

$$= 0.24 \text{ A secondary}$$

set 303: TL14 = 2 seconds

2.3.4 CURRENT UNBALANCE TRIP 46T

Algorithm:

$$\text{Operating Time } T = \frac{\text{K2}}{(I_2 / I_{FL})^2} \text{ seconds}$$

where

I_2 = Negative sequence current

K2 = 46T K2 setting (Setting 404: **K2**)

I_{FL} = Full load current of the machine (Setting 115: **RATEDCUR**)

1. Time T is computed only if I_2 > 46T PICKUP
2. Reset time: Linear reset (227 seconds maximum)

Characteristics: Figure 2–6: TIME CURRENT CHARACTERISTIC OF 46T FUNCTION shows the curves for selected values of Setting 404: **K2**. The curve for any other **K2** setting can be derived with the above algorithm.

This function should be set at or below the negative-sequence current capability of the machine.

For the sample generator system,

set PICKUP = I_2 capability of the machine

$$= 0.08 \times \frac{211765}{1.732 \times 18 \times 1600}$$

$$= 0.34 \text{ A secondary}$$

set K2 = machine I_2^2T capability = 10

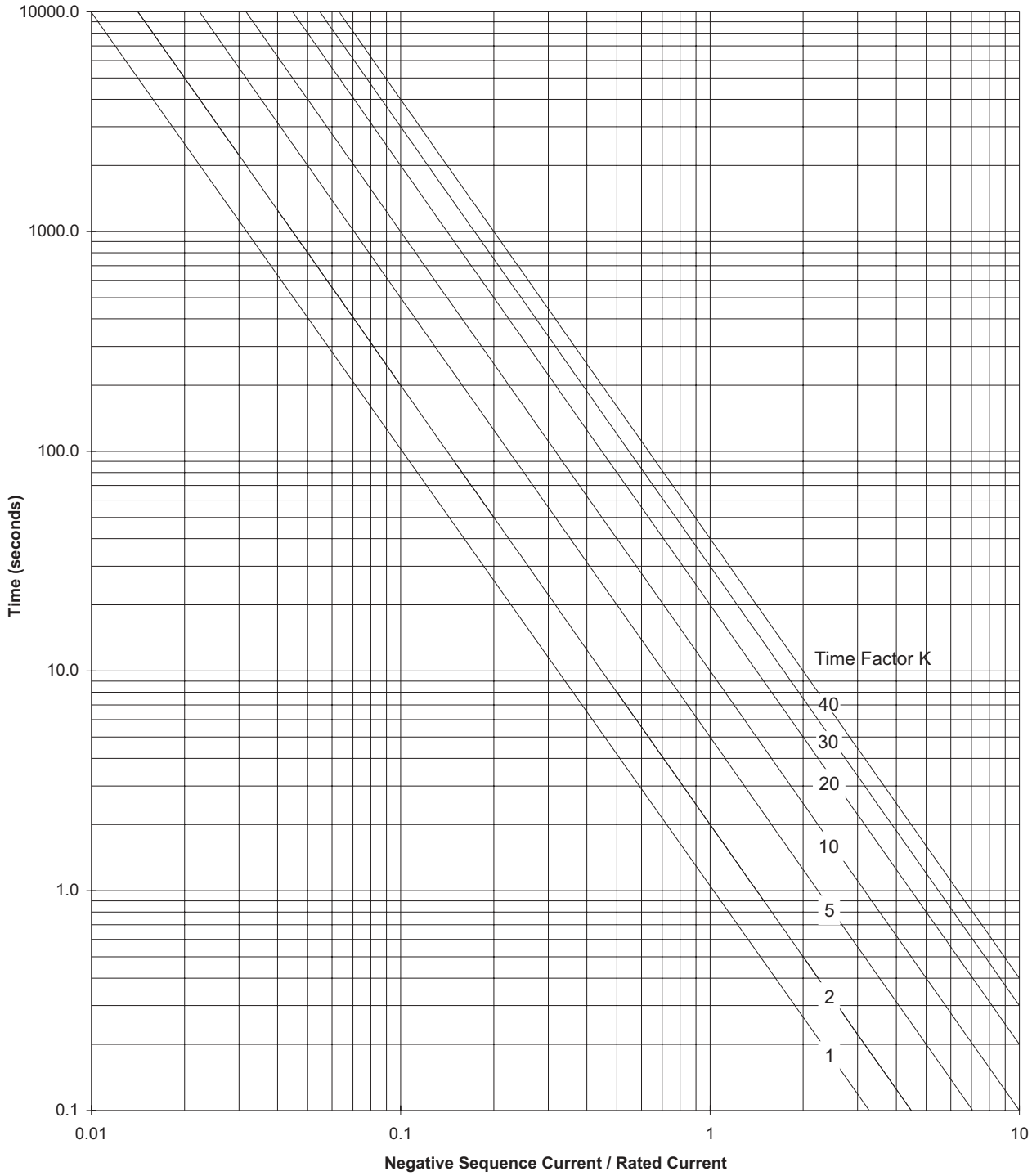

Figure 2–6: TIME CURRENT CHARACTERISTIC OF 46T FUNCTION

Algorithm: Impedance looking in to the machine is computed using delta voltage and delta current as shown in the following equation. Functions 40-1 and 40-2 are identical, each with an adjustable time delay.

$$Z_{ab} = \frac{\overline{V}_a - \overline{V}_b}{\overline{I}_a - \overline{I}_b} \text{ if Setting 109: PHASE = A-B-C}$$

$$Z_{ac} = \frac{\overline{V}_a - \overline{V}_c}{\overline{I}_a - \overline{I}_c} \text{ if Setting 109: PHASE = A-C-B}$$

Characteristic and setting criteria: See Figure 2–7: MHO CHARACTERISTICS FOR 40-1 & 40-2 FUNCTIONS.

With settings per the criteria shown in Figure 2–7: MHO CHARACTERISTICS FOR 40-1 & 40-2 FUNCTIONS, function 40-1 detects the loss of excitation for about 30% or higher load conditions; function 40-2 detects for all load conditions, However, some stable power system swing conditions may momentarily enter the 40-2 characteristic. For security of the function under stable swing conditions, it is recommended to delay functions 40-1 and 40-2 by a minimum of 0.06 and 0.5 seconds, respectively.

Setting 501: **SELV2SUP** can be set to either 0 (DISABLE) or 1 (ENABLE). It is recommended to set this to function to ENABLE unless an external VTFF is used via input DI6.

For the sample generator system,

$$Z_b(\text{secondary}) = \frac{\text{kV}_{\text{base}}^2}{\text{MVA}_{\text{base}}} \times \frac{\text{CT Ratio}}{\text{VT Ratio}}$$

$$= \frac{18^2}{211.765} \times \frac{1600}{157.5} = 15.54 \text{ ohms}$$

X_d' (secondary) = 15.54 × 0.216 = 3.36 ohms

X_d (secondary) = 15.54 × 1.967 = 30.57 ohms

Set 501: **SELV2SUP** to 1 (ENABLE).

Set the 40-1 setpoints to the following values:

$$\text{CENTER} = \frac{15.54 + 3.36}{2} = 9.45 \text{ ohms}$$

$$\text{RADIUS} = \frac{15.54}{2} = 7.77 \text{ ohms}$$

TL12 = 0.06 seconds

Set the 40-2 setpoints to the following values:

$$\text{CENTER} = \frac{30.57 + 3.36}{2} = 16.97 \text{ ohms}$$

$$\text{RADIUS} = \frac{30.57}{2} = 15.28 \text{ ohms}$$

TL12 = 0.5 seconds

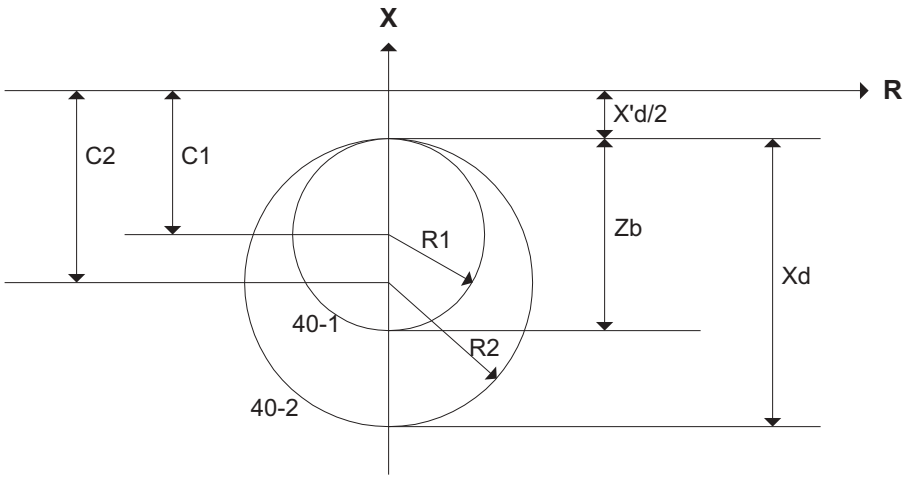

C1 = Center of 40-1
= (Zb + X'd)/2

R1 = Radius of 40-1
= Zb/2

C2 = Center of 40-2
= (Xd + X'd)/2

R2 = Radius of 40-2
= Xd/2

Zb = Base impedance of the machine
X'd = Transient reactance of the machine
Xd = Synchronous reactance of the machine

Figure 2–7: MHO CHARACTERISTICS FOR 40-1 & 40-2 FUNCTIONS

2.3.6 ANTI-MOTORING (REVERSE POWER)

The 32-1 and 32-2 anti-motoring reverse power level settings 804: **REV PWR** and 903: **REV PWR** (optional, not available in DGP***ABA models) can be set from 0.5 to 99.9 W each.

The reverse power levels (**REV PWR**) of 32-1 and 32-2 should be set at 30 to 70% (depending on power factor following the turbine trip) of the turbine-generator motoring power .

Integrating type timers are associated with anti-motoring to achieve high level of dependability when the power is around the **REV PWR** setting, particularly at high power factor. If Setting 803: **SQ TR EN** (sequential trip enable) is set to YES, a value of three seconds or less is suggested for the timer TL1 associated with 32-1. If **SQ TR EN** is set to NO, Setting 805: **TL1** should be identical to Setting 904: **TL2** described below.

Timer TL2, associated with 32-2, should be set to override the power swings expected during normal system operations. A setting of 10 to 60 seconds is suggested.

Setting 803: **SQ TR EN** can be set to YES or NO, depending on the generator tripping strategy used.

For the sample generator system,

$$\text{motoring power} = \frac{22000 \times 1000}{\text{CT RATIO} \times \text{VT RATIO}} \text{ watts} = \frac{22000 \times 1000}{1600 \times 157.5} \text{ watts} = 87.3 \text{ watts}$$

Set **REV PWR** to:

REV PWR = 0.5 × 87.3 (functions 32-1 and 32-2)
= 43.6 watts

Set **TL1** to:

TL1 = 2 or 30 seconds, depending on Setting 803: **SQ TR EN**.

Set **TL2** to:

TL2 = 30 seconds

2.3.7 OVERCURRENT WITH VOLTAGE RESTRAINT (51V)

Algorithm:

$$T = \frac{K}{\sqrt{\frac{I / I_{PU}}{V / V_{NOM}} - 1}} \text{ seconds}$$

where: T = Operating time.
K = time factor (Setting 1004: **TIME FAC**).
I / I_{PU} = current in multiple of I_{PU} (Setting 1003: **PICKUP**).
V_{NOM} = Nominal Voltage (Setting 114: **NOM VOLT**)
V = $\sqrt{3}$ × phase-to-ground voltage for Wye connected VTs (see note 2)
phase-to-phase voltage for Delta connected VTs

1. Time T is computed individually for each phase.
2. See the table below for the restraint voltages corresponding to phase currents for different **PHASE** (Setting 109) and **VT CONN** (Setting 116) settings.
3. If the quantity $V / V_{NOM} < 0.3$, then 0.3 is used as its value in the equation.
4. If the quantity $\frac{I / I_{PU}}{V / V_{NOM}} < 0.3$, then 65.5 is used as its value in the equation.
5. Reset Time: Linear reset with maximum of 1.4 seconds.

Table 2–2: 51V RESTRAINT VOLTAGES

CURRENT	RESTRAINT VOLTAGES			
PHASE → VT →	ABC WYE	ABC DELTA	ACB WYE	ACB DELTA
I_A	V_A	V_{AB}	V_A	V_{AC}
I_B	V_B	V_{BC}	V_B	V_{BA}
I_C	V_C	V_{CA}	V_C	V_{CB}

Characteristics: The following four graphs show the curves for selected values of *K* and Voltage Restraint. The curve for any combination of *K* and Restraint Voltage can be determined with the above algorithm.

This function should be set to coordinate with the power system protective relays used at the generating station. Also, the **PICKUP** setting should be a safe margin above the expected maximum load on the machine. Refer to Section 2.3.19: ACCIDENTAL ENERGIZATION AE on page 2–37 for additional considerations regarding the 51V **PICKUP** setting.

For the sample generator system,

set **PICKUP** = 1.75 × generator rated load current
= 1.75 × 4.25 A
= 7.5 A secondary

Setting 1004: **TIME FAC** (*K*) should be selected to back up the relays on transmission lines out of the generating station. As the information about line relays is not known, set **TIME FAC** such that the operate time of 51V for a 3-phase fault on the high side of the GSU is about 0.75 second. For simplicity, power system contribution to the fault is not considered in the following calculations.

$$\text{Impedance to fault} = 21.6 + \left(10 \times \frac{211.765}{200}\right) = 21.6 + 10.6 = 32.2\% \text{ at machine base}$$

Generator contribution = 4.25 / 0.322 = 13.2 A secondary

Multiple of **PICKUP** = 13.2 / 7.5 = 1.76

$$\text{Generator terminal voltage} = 18 \times \frac{10.6}{32.2} = 5.93 \text{ kV}$$

$$\%\text{ restraint} = \frac{5.93}{18} \times 100 = 32.9\%$$

$$\textbf{TIME FAC (K)} = 0.75 \times \left(\sqrt{\frac{1.76}{0.329}} - 1\right) = 0.985 \text{ or higher}$$

set **TIME FAC** = 1.0

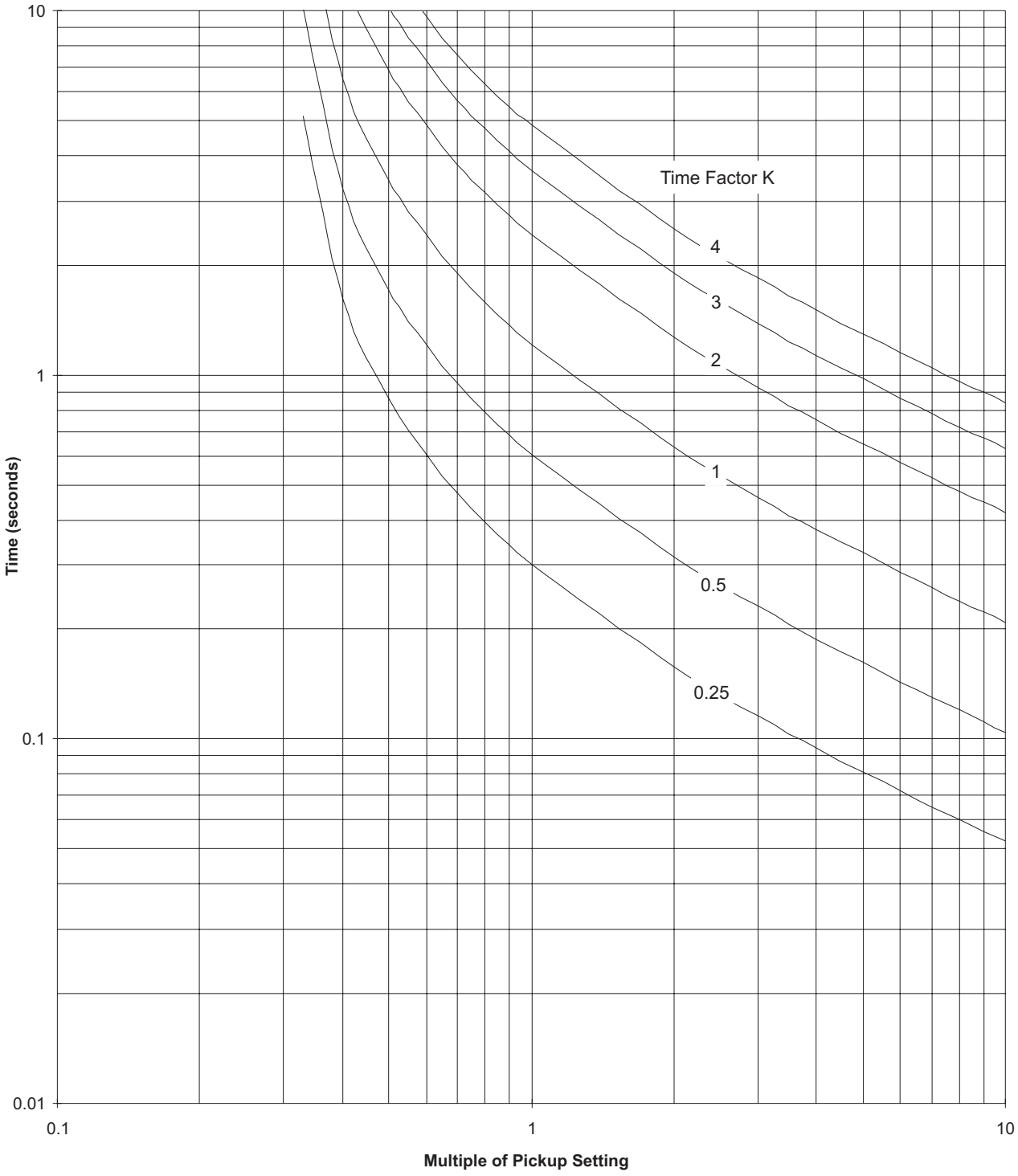

Figure 2–8: 51V TIME-CURRENT CHARACTERISTICS FOR 0 TO 30% RESTRAINT

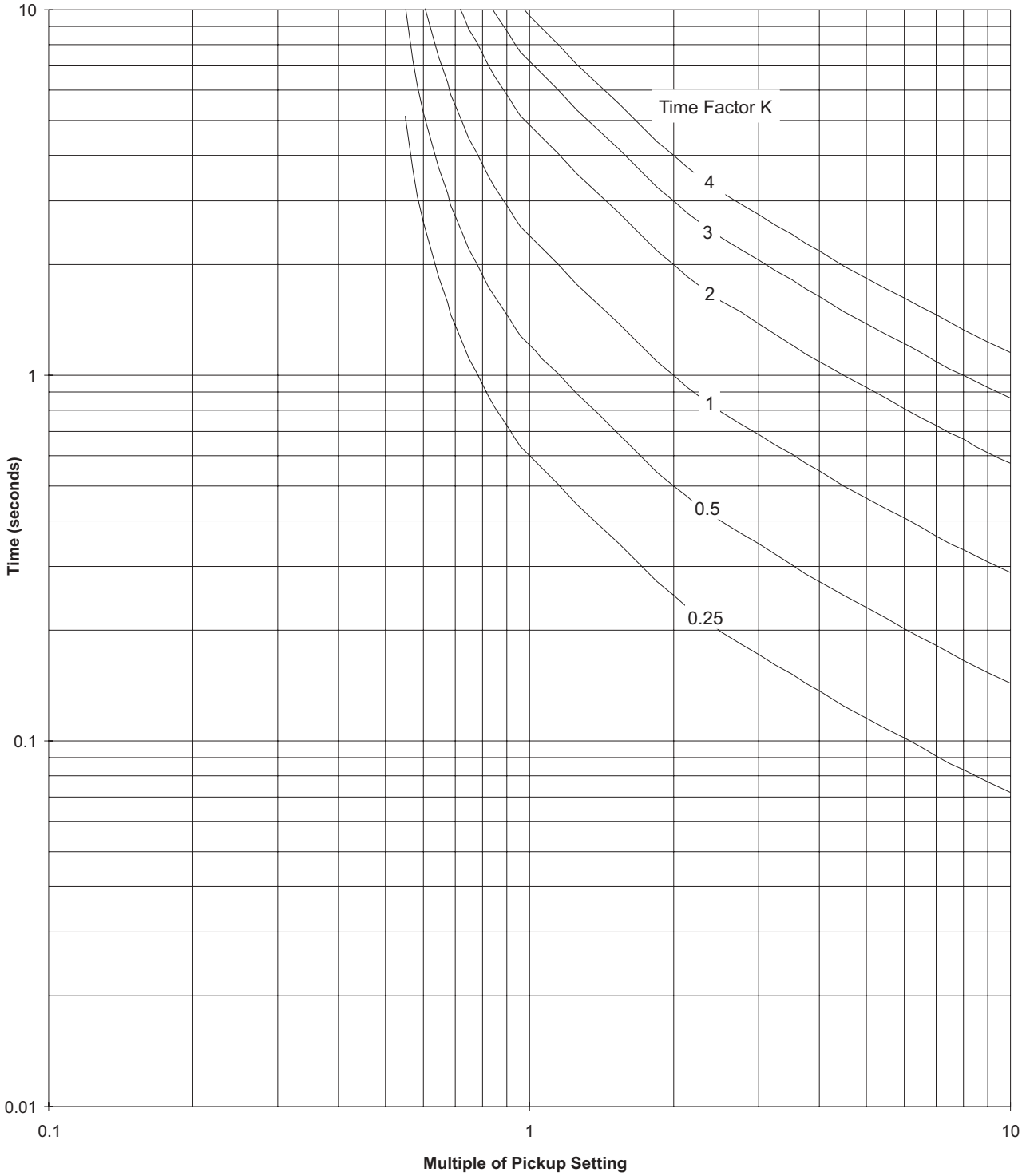

Figure 2–9: 51V TIME-CURRENT CHARACTERISTICS FOR 50% RESTRAINT

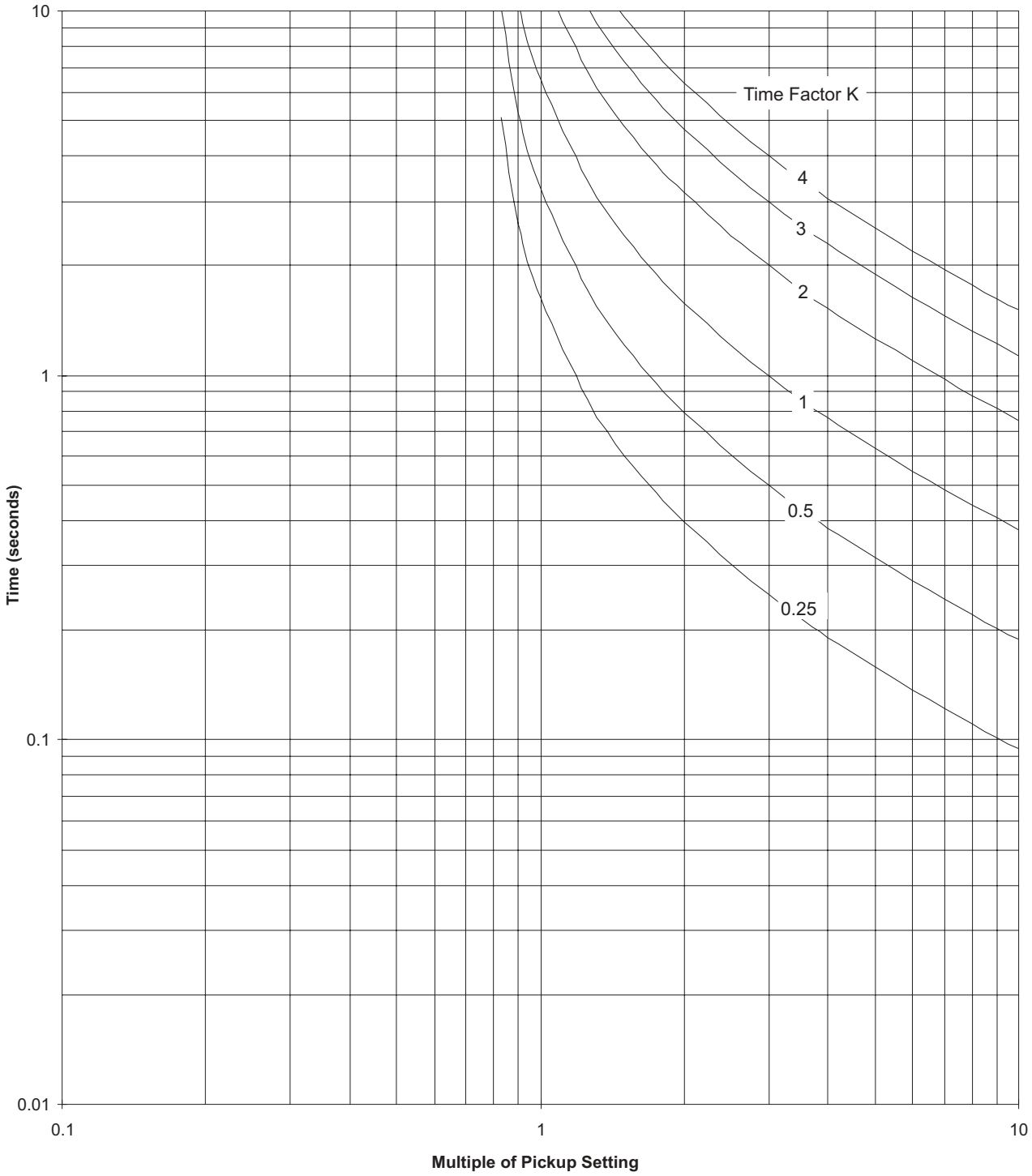

Figure 2–10: 51V TIME-CURRENT CHARACTERISTICS FOR 75% RESTRAINT

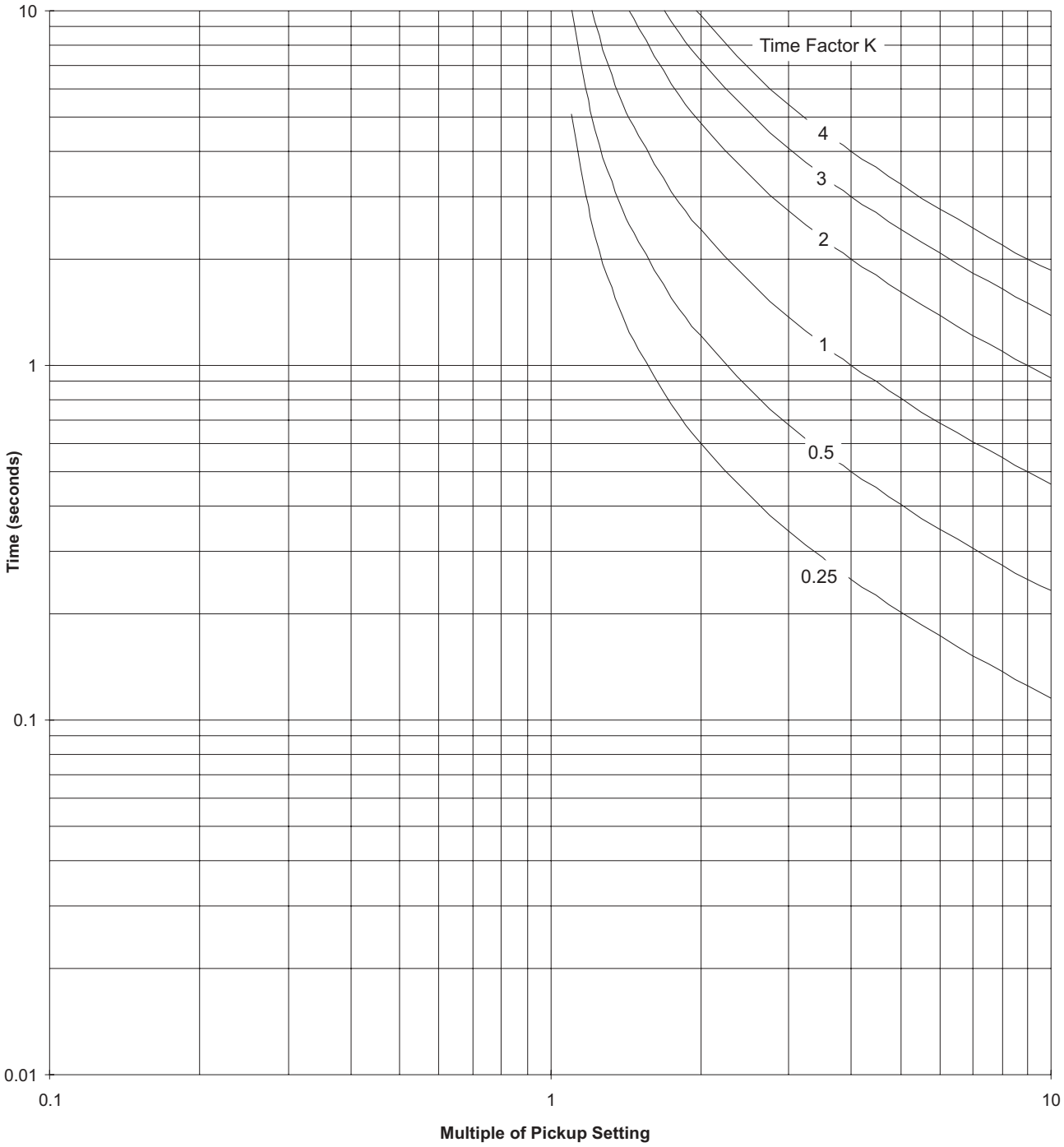

Figure 2–11: 51V TIME-CURRENT CHARACTERISTICS FOR 100% RESTRAINT

2.3.8 STATOR GROUND FAULT 64G-1

Algorithm: 64G-1 operates if following condition is met:

$V_{N1} \geq$ **PICKUP** for time > TL4 seconds

where: V_{N1} = Neutral voltage of fundamental frequency
PICKUP = 64G-1 pickup setting
TL4 = timer TL4 setting

Setting 1103: **PICKUP** of 64G-1 should be set with a safe margin above the highest voltage (fundamental frequency) expected at the generator neutral under normal operating conditions. Timer TL4 should be set with a safe margin above the longest clearing time for power system faults that are outside of the generator protection zone.

For the sample generator system,

set 1103: **PICKUP** = 5.0 volts

set 1104: **TL4** = 1 second or higher

2.3.9 STATOR GROUND FAULT 64G-2

Algorithm: 64G-2 operates when the following condition is met:

$$\frac{V_{N3}}{(V_{P3}/3) + V_{N3}} \leq 0.15 \quad \text{for time >TL5 seconds}$$

The only setting required for this optional function is for timer TL5 (Setting 1203: **TL5**) to provide a short delay for security of the function.

For the sample generator system,

set 1203: **TL5** = 0.10 second.

2.3.10 STATOR GROUND FAULT 27TN

Algorithm: 27TN operates when the following conditions are met (see Figure 1–5: SIMPLE LOGIC DIAGRAM – 64G1, 64G2, 51GN, AND 24 on page 1–15 for the logic diagram):

$V_{N3} \leq$ 27TN PICKUP and $V_1 \geq$ 25V for time > TL20

where: V_{N3} = Third harmonic voltage at generator neutral.
V_1 = Positive sequence voltage at generator terminals.
TL20 = Timer TL20 (Setting 3004: **TL20**).

Setting 3003: **PICKUP** should be set as sensitive as the V_{N3} characteristic of the generator allows without loss of security. A flexible window of power can be established to enhance security of 27TN. For example, assume that the available V_{N3} is below 27TN pickup for power outputs in the range of 50 to 80 watts. The flexible window is provided by Settings 3005: **FORPWR-L** and 3006: **FORPWR-H**, which can be set at 47 and 85 watts (based on margin of about 5%) respectively to inhibit the function between the limits. This function can also be blocked when the generator is off-line; refer to Setting 2501: **SELBKDI1**.

Settings 3003: **PICKUP**, 3005: **FORPWR-L**, and 3006: **FORPWR-H** require measurements to determine proper settings. The DGP measures and displays 3rd harmonic voltage (THIRD HARMONIC N) at the generator terminals. The 3rd harmonic voltage varies at very low forward power levels and in many cases is non-zero when the generator is starting and becomes lower (or zero) in a certain band of forward power. Is is recommended that the 3rd harmonic voltage related to forward power is recorded as the unit is started and ran to full load to determine the exact values for **PICKUP**, **FORPWR-L**, and **FORPWR-H**.

2.3.11 OVEREXCITATION ALARM (VOLTS/HERTZ: 24A)

This function is intended to alarm prior to a 24T trip, allowing an operator to take corrective action. Setting 1302: **PICKUP** should be below the continuous Volts/Hz rating of the generator or step-up transformer, whichever is lower. Timer TL6 (Setting 1303: **TL6**) should be set to minimize the nuisance alarms.

For the sample generator system, assume an allowable over V/Hz of 10%.

set **PICKUP** = 1 + (90% of 10%) per unit = 1.09 per unit

set **TL6** = 2 seconds.

2.3.12 OVEREXCITATION TRIP (VOLTS/HERTZ: 24T)

Algorithm:

$$T1 = \frac{K}{\left(\frac{V/F}{\text{PU} \times (V_{NOM}/F_S)}\right)^2 - 1} \text{ seconds}$$

$$T2 = \frac{K}{\frac{V/F}{\text{PU} \times V_{NOM}/F_S} - 1} \text{ seconds}$$

$$T3 = \frac{K}{\left(\frac{V/F}{\text{PU} \times (V_{NOM}/F_S)}\right)^{0.5} - 1} \text{ seconds}$$

$$T4 = K \text{ seconds}$$

where

T1 = Operating time for CURVE #1 (see Figure 2–12: TIME CHARACTERISTICS OF FUNCTION 24T (CURVE 1) on page 2–31)

T2 = Operating time for CURVE #2 (see Figure 2–13: TIME CHARACTERISTICS OF FUNCTION 24T (CURVE 2) on page 2–32)

T3 = Operating time for CURVE #3 (see Figure 2–14: TIME CHARACTERISTICS OF FUNCTION 24T (CURVE 3) on page 2–33)

T4 = Operating time for CURVE #4 - characteristic of curve #4 is definite time providing the operating time equal to K seconds if

$$\frac{V}{F} > \text{PU} \times \frac{V_{NOM}}{F_S}$$

K = Time factor (Setting 1406: **TIME FAC**)

V_{NOM} = nominal voltage (Setting 114: **NOM VOLT**)

F_S = system frequency (Setting 102: **SYSFREQ**)

PU = V/Hz pickup (Setting 1405: **INV PU**)

1. The algorithm is processed separately for each phase.
2. V and V_{NOM} values used are phase-ground voltages for wye-connected VTs. However, phase-phase voltages are used for delta-connected VTs. The following table shows the voltages used by each of the three

phases for different phase designations (Setting 109: **PHASE**) and VT connections (Setting 116: **VT CONN**).

Table 2–3: 24A VOLTAGES

PHASE	VOLTAGES			
PHASE → VT →	ABC WYE	ABC DELTA	ACB WYE	ACB DELTA
A	V_A	V_{AB}	V_A	V_{AB}
B	V_B	V_{BC}	V_B	V_{BC}
C	V_C	V_{CA}	V_C	V_{CA}

3. Reset time: Linear reset with maximum time = **RESET** setting (Setting 1409).

   This function should be set with a safe margin below the excitation capability of the generator or step-up transformer, whichever is lower. The following example is based on the traditional criteria of 45 seconds operating time at V/Hz from 1.1 to 1.18 per unit. However, actual excitation capability curves should be obtained for the generator and the transformer to take full advantage of the inverse characteristic of this function. Setting 1409: **RESET** should be set to match the cooling characteristic of the protected equipment (if known). If the reset characteristic is not available, a setting in the range of 0 to 50 seconds may be used.

For the sample generator system, using CURVE #4 (definite time) and operating time of 45 seconds:

set **INV PU** = 1.10 per unit

set **TIME FAC** = 45 seconds

set **INST PU** = 1.18 per unit

set **TL7** = 2 seconds

set **RESET** = 30 seconds

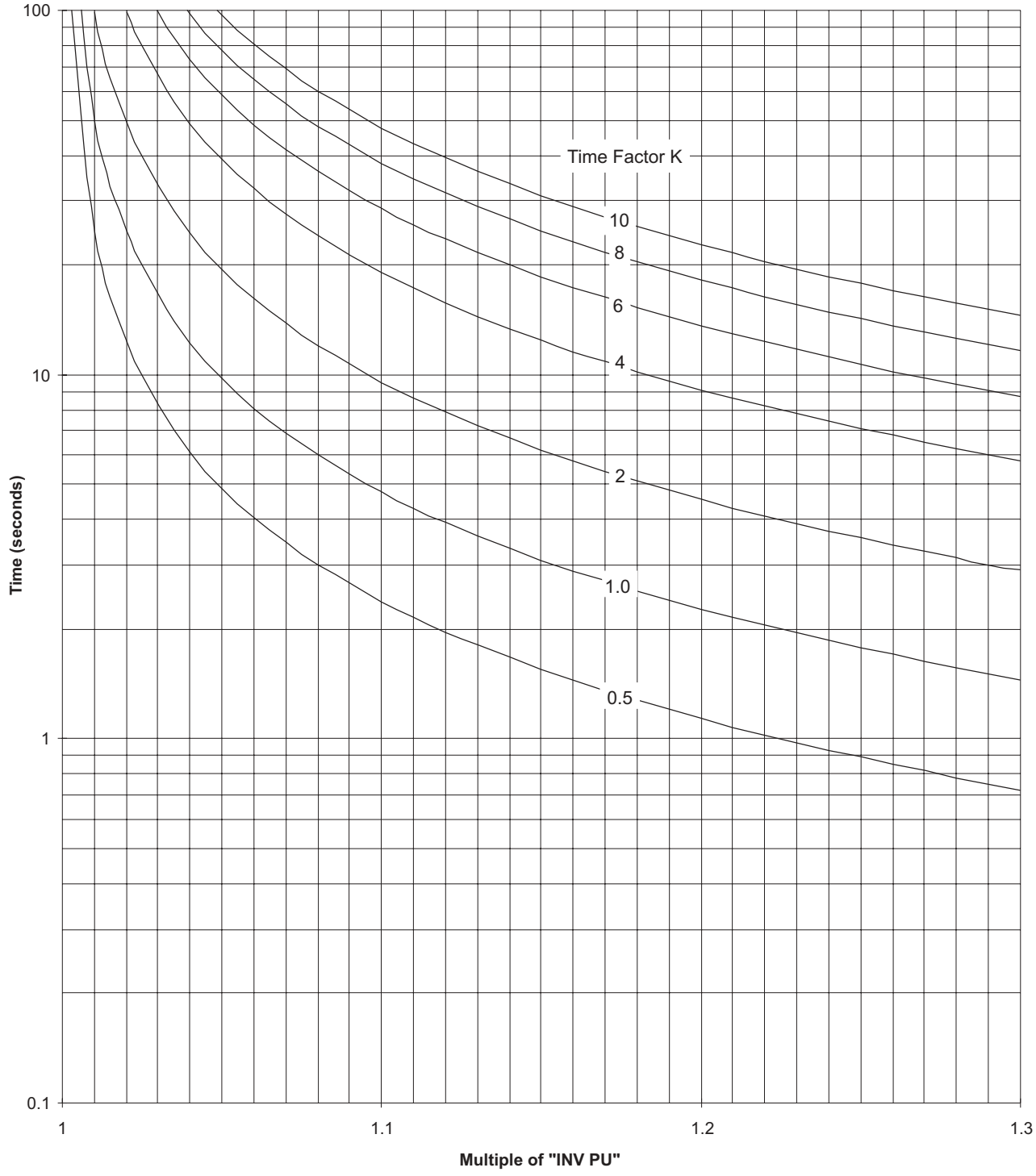

Figure 2–12: TIME CHARACTERISTICS OF FUNCTION 24T (CURVE 1)

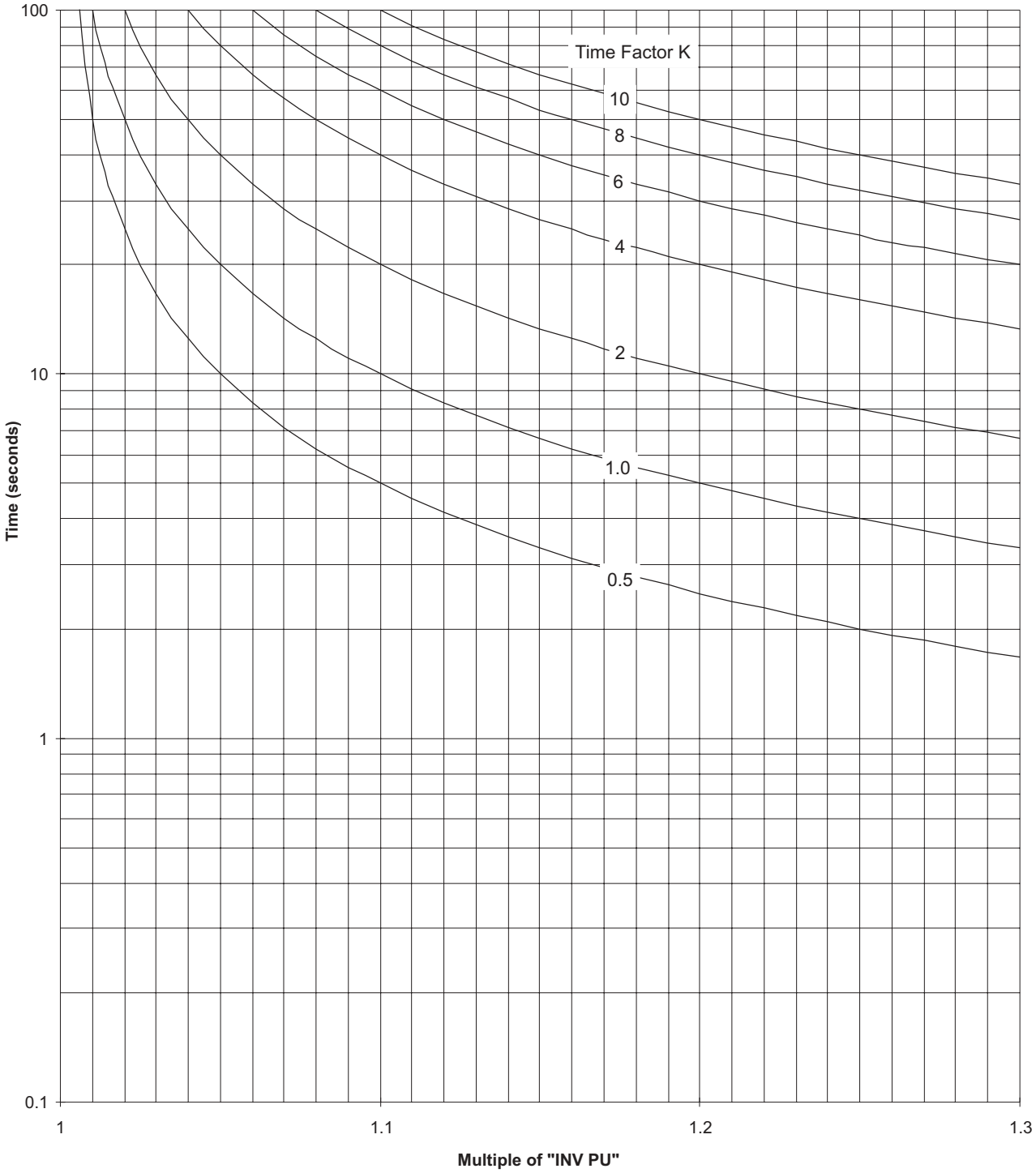

Figure 2–13: TIME CHARACTERISTICS OF FUNCTION 24T (CURVE 2)

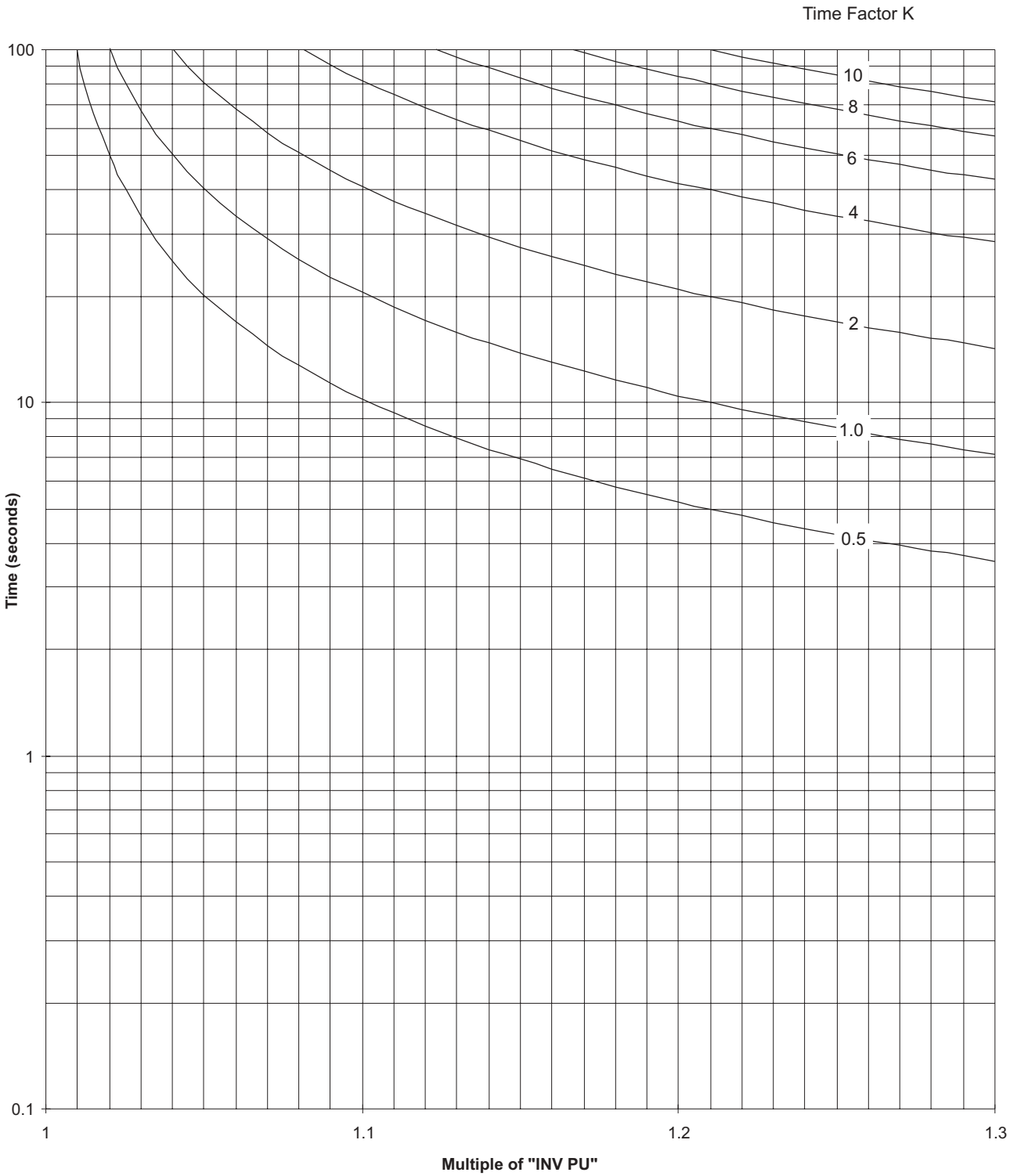

Figure 2–14: TIME CHARACTERISTICS OF FUNCTION 24T (CURVE 3)

Algorithm:

$$T1 = \frac{K}{\frac{V_1}{V_{PU}} - 1} \text{ seconds}$$

T2 = *K* seconds

T3 = no intentional time delay

where:

T1 = Operating time for **CURVE #1** (see Figure 2–15: 59 TIME-VOLTAGE CHARACTERISTICS)

T2 = Operating time for **CURVE #2** (the characteristic of optional curve #2 is definite time providing the operating time equal to K seconds if $V_1 > V_{PU}$)

T3 = Operating time of optional instantaneous function if $V_1 > V_{PU}$

K = time factor (Setting 1504: **TIME FAC**)

V_1 = positive-sequence voltage (phase-phase)

V_{PU} = overvoltage pickup (Setting 1503: **INV PICKUP**)

V_{IPU} = instantaneous overvoltage pickup (Setting 1506: **INST PU**)

Reset Time: Linear reset (1.4 seconds maximum)

Characteristics: Figure 2–15: 59 TIME-VOLTAGE CHARACTERISTICS shows the CURVE #1 for selected values of *K*. The curve for any other *K* setting can be derived using the above algorithm.

This function should be set with a safe margin below the overvoltage capability of the protected equipment. Function 59 can provide backup to function 24T.

For the sample generator system, set 59 using criteria similar to 24T settings except with lower sensitivity and higher operating time.

Set V_{PU} = 1.1 × **NOM VOLT** = 1.1 × 114.3 = 126 volts

For determining the time factor *K* (assuming CURVE #1 is used), use an operating time of about 45 seconds at 115% of **PICKUP** voltage.

Voltage (*V*) = 1.15 × 126 = 144.9 volts

$$\text{Time Factor } K = 45 \cdot \left(\frac{144.9}{126} - 1\right) = 6.75$$

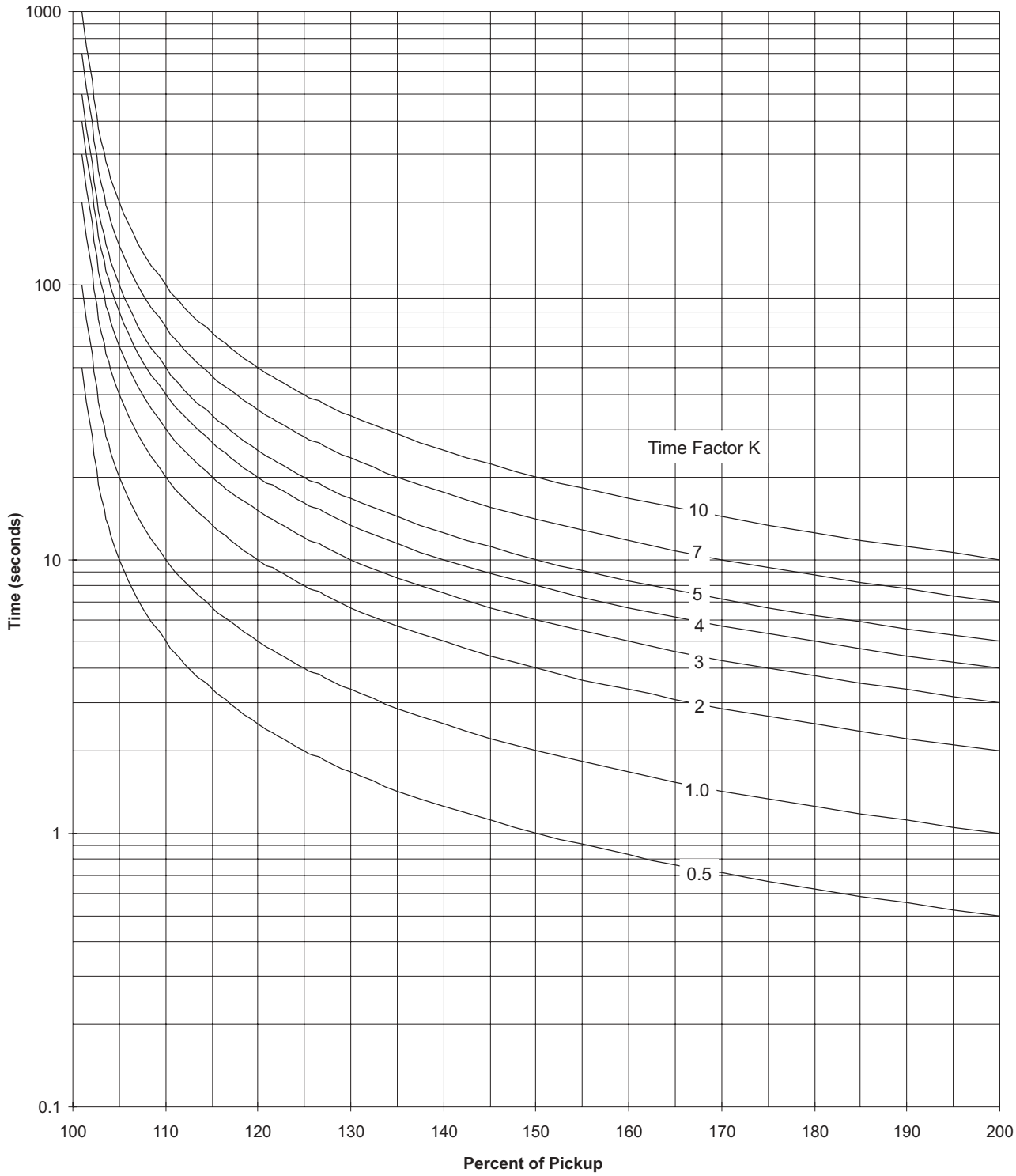

Figure 2–15: 59 TIME-VOLTAGE CHARACTERISTICS

2.3.14 UNDERVOLTAGE CUTOFF OF 81

Setting 1601: **UVCUTOFF** can be set from 35 to 99% of the nominal voltage (Setting 114: **NOM VOLT**). This setting can be used to block the frequency functions from operating during start-up conditions until near-normal generator field is applied and set voltage is generated.

2.3.15 UNDERFREQUENCY 81-U

There are either two or four underfrequency functions included with the DGP, depending on the model. Each of the functions (Settings 1703/1803/1903/2003: **SET PNT**) can be set from 40.00 to 65.00 Hz, with a time delay of 0.1 to 999.9 seconds for 81-1U and 0.05 to 99.99 seconds for the other(s). The actual settings will depend on the protection and operating philosophies of the individual user.

2.3.16 OVERFREQUENCY 81-O

There are either two or four overfrequency functions included in the DGP, depending on the model. Each of the functions (Settings 2103/2203/2303/2403: **SET PNT**) can be set from 45.00 to 79.99 Hz, with a time delay of 0.05 to 99.99 seconds. The actual settings will depend on the protection and operating philosophies of the individual user.

2.3.17 DIGITAL INPUT DI

Setting 2501: **SELBKDI1** determines the blocking action by digital input DI1 (generator off-line) when it is energized. It is set from 0 to 9 depending on the protection functions to be blocked during the start-up. The table below describes the different blocking actions:

Table 2–4: DI1 BLOCKING CONFIGURATION

SELBKDI1	FUNCTIONS DISABLED (X) BY DI1			
	81	32	64G2 / 27TN [1]	VTFF
NO BLK (0)	-	-	-	-
BLK #1 (1)	**X**	-	-	**X**
BLK #2 (2)	**X**	-	**X**	-
BLK #3 (3)	**X**	-	**X**	**X**
BLK #4 (4)	**X**	**X**	-	-
BLK #5 (5)	-	**X**	-	**X**
BLK #6 (6)	**X**	**X**	-	**X**
BLK #7 (7)	-	**X**	**X**	**X**
BLK #8 (8)	**X**	-	-	-
BLK #9 (9)	**X**	**X**	**X**	**X**

[1] Refer to the Nomenclature Guide for available functions

Note that for DGP***ABA models, some of the **SELBKDI1** settings are functionally redundant; any one of such settings may be used to obtain the specified functionality.

An appropriate combination of functions 81, 32, 64G2, 27TN, and VTFF should be blocked during start-up (generator off-line) as required. For example, to prevent nuisance operation, Setting 2501: **SELBKDI1** may be set as follows:

- BLK #6 to block 81, 32, and VTFF for cross compound machine.
- BLK #8 to block 81 if generator field is applied at a speed lower than the speed corresponding to lowest 81U setpoint.
- BLK #9 to block all four functions for a gas turbine generator with static start.

Settings 2502: **DI3 TRIP**, 2503: **DI3 ALARM**, 2504/5: **DI4 TRIP**, and 2505/6: **DI4 ALARM** can be used to operate any or all of the Trip (94G to 94G3) or Alarm (74A to 74D) relays. If the settings are selected, energizing the corresponding digital input will cause the appropriate Trip and Alarm relay to operate after time delay, if applicable.

Setting 2508: **DI6 FUNC** can be set to 0 (EXTVTFF) or 1 (DISPROT) to configure the DI6 input. If set to 0 (EXTVTFF), the DI6 is configured to receive an external VTFF signal. If set to 1 (DISPROT), the DI6 is configured to disable all protection functions as long as the input signal is present. It should be set to 0 (EXTVTFF) if the input DI6 is not used.

2.3.18 VOLTAGE TRANSFORMER FUSE FAILURE VTFF

Setting 2601: **VTFF** can be set to either 0 (DISABLE) or 1 (ENABLE) as desired. It is recommended to set **VTFF** = 1 (ENABLE) if the external VTFF input (DI6) is not used. If the external VTFF input is used, the **VTFF** setting will depend on user preference.

2.3.19 ACCIDENTAL ENERGIZATION AE

Setting 2703: **AE ARM** can be set to 0 (AND) or 1 (OR) as desired. If set to 0 (AND), the logic will be armed when the positive sequence voltage V1 < 30 volts *and* the generator is off-line. If it is set to 1 (OR), the logic will be armed when the voltage V1 < 30 volts *or* the generator is off-line. The setting of 0 (AND) is recommended. However, if ***both*** of the following conditions apply, it must be set to 1 (OR) for effective arming of the logic.

- The generator system includes a generator disconnect device (breaker or switch), **and**
- The VTs are connected on the power system side of the disconnect device.

Since the pickup flag of function 51V is used for instantaneous overcurrent signal in the Accidental Energization logic (Figure 1–3: SIMPLE LOGIC DIAGRAM – 87G, 32, 27, 59, AND AE on page 1–13), the following additional criteria should be used in setting the 51V PICKUP.

The 51V PICKUP (Setting 1003: **PICKUP**) should be set with a safe margin above I_{LMAX}, where I_{LMAX} is an expected maximum load current of the machine. If Setting 2703: **AE ARM** is set to 1 (OR) and simultaneous loss of all three phase voltages is likely, then **PICKUP** should be set with a safe margin above $3.33 \times I_{LMAX}$.

Note that function AE will be effectively disabled if function 51V is disabled by setting both its **TRIP** and **ALARM** codes (Settings 1001 and 1002) to 0000. This is in addition to the normal way of disabling function AE by setting its **TRIP** and **ALARM** codes (Settings 2701 and 2702) to 0000.

For the sample generator system,

set **AE ARM** = 0 (AND)

2.3.20 GROUND OVERCURRENT 51GN

Algorithm:

$$\text{Operating Time } T = \frac{K}{\sqrt{I_{NR}/I_{PU} - 1}} \text{ seconds}$$

where:

K = time factor (Setting 2804: **TIME FAC**)

I_{NR} = Neutral current (fundamental frequency)

I_{PU} = Setting 2803: **PICKUP** current

Reset Time: Linear reset (1.4 seconds maximum)

Characteristics: Figure 2–16: 51GN TIME-CURRENT CHARACTERISTICS shows the curves for selected values of K. The curve for any other value of K can be derived using the above algorithm.

Setting 2803: **PICKUP** of 51GN should be set with a safe margin above the highest neutral current (fundamental frequency) expected under normal operating conditions. Setting 2804: **TIME FAC** should be set to coordinate with other protective devices for power system faults that are outside of the generator protection zone.

For the sample generator system, function 51GN is not usable, due to the high resistance grounding and high CT ratio for the function. Set Settings 2801: **TRIP** and 2802: **ALARM** to 0000 to disable the function.

2.3.21 UNDERVOLTAGE 27

Algorithm:

$$\text{T1} = \frac{K}{(V_{PU}/V_1) - 1} \text{ seconds}$$

where:

T1= operating time for CURVE #1 (Figure 2–17: 27 TIME-VOLTAGE CHARACTERISTICS on page 2–40)

T2= operating time for CURVE #2 (the characteristic of CURVE #2 is definite time providing the operating time is equal to K seconds if $V_1 < V_{PU}$)

V_1 = positive-sequence voltage (phase-phase).

V_{PU} = undervoltage function threshold (Setting 2903: **PICKUP**).

Reset Time: Linear reset (1.4 seconds maximum)

The algorithm is NOT processed if input DI1 (generator off-line) is present.

Characteristics: Figure 2–17: 27 TIME-VOLTAGE CHARACTERISTICS shows the CURVE #1 for selected values of K. The curve for any other K setting can be derived using the above algorithm. This optional function can be used to isolate the generator from the utility system for an undervoltage condition. Settings 2905: **CURVE #**, 2903: **PICKUP**, and 2904: **TIME FAC** should be set to override voltage dips caused by normal power system faults.

For the sample generator system, 27 can be set as follows:

CURVE # = 2 (Definite Time)
PICKUP = 102 V (< 90% of **NOM VOLT** of 114.3 V)
TIME FAC = 1.0 second

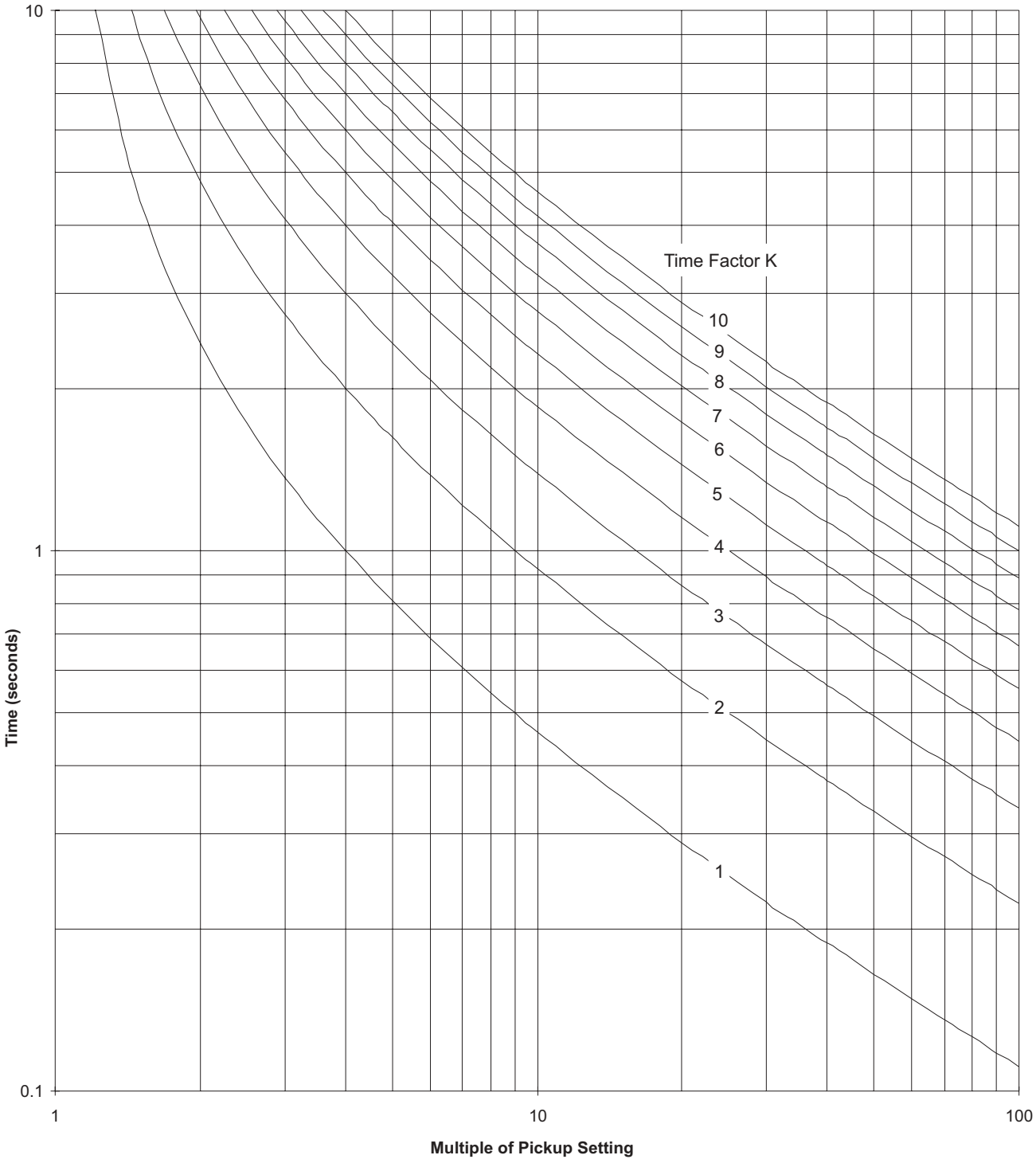

Figure 2–16: 51GN TIME-CURRENT CHARACTERISTICS

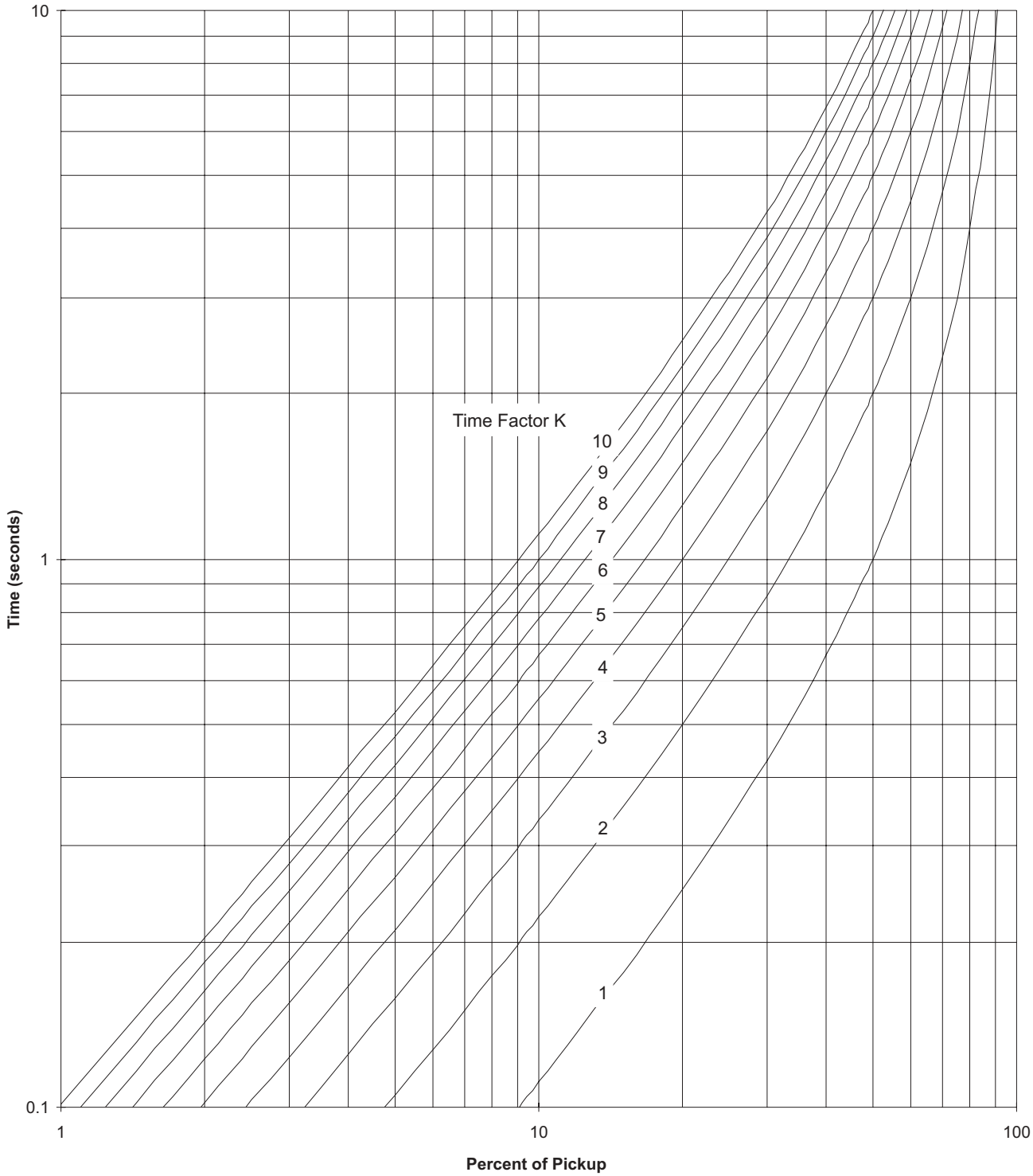

Figure 2–17: 27 TIME-VOLTAGE CHARACTERISTICS

Table 2–5: DGP*AAA SETTINGS TABLE (Sheet 1 of 5)**

LOCATION: RELAY MODEL NUMBER: DGP _ _ _ AAA		GENERATOR NUMBER: PROM VERSION NUMBER: V _ _ _ . _ _ _ _ _ F	
SETTING #	**MNEMONIC**	**DESCRIPTION**	**USER SETTING**
CONFIGURATION: CONFIG			
101	UNITID	Unit ID number	
102	SYSFREQ	System Frequency	Hz
103	SEL TVM	Select Trip Voltage Monitoring	
104	SEL TCM	Select Trip Current Monitoring	
105	SELPRIM	Select Primary/Secondary units	
106	CT RATIO	Current Transformer Ratio	
107	VT RATIO	Voltage Transformer Ratio	
108	COMMPORT	Communications Port	
109	PHASE	Phase Rotation	
110	TIMESYNC	Time Synchronizing source	
111	NUM FLTS	Number of Fault events stored	
112	PREFLT	Number of prefault cycles stored	Cycles
113	OSC TRIG	External oscillography trigger	
114	NOM VOLT	Nominal Voltage of generator	Volts
115	RATEDCUR	Rated Current of generator	Amps
116	VT CONN	Type of VT connection	
STATOR DIFFERENTIAL: 87G			
201	TRIP	Configure trip outputs	
202	ALARM	Configure alarm outputs	
203	K1	K factor	%
204	PICKUP	Pickup level	Amps
CURRENT UNBALANCE – ALARM: 46A			
301	ALARM	Configure alarm outputs	
302	PICKUP	Pickup current (Negative sequence)	Amps
303	TL14	Timer TL14 setting	Sec.
CURRENT UNBALANCE – TRIP: 46T			
401	TRIP	Configure trip outputs	

Table 2–5: DGP*AAA SETTINGS TABLE (Sheet 2 of 5)**

LOCATION: GENERATOR NUMBER: RELAY MODEL NUMBER: DGP _ _ _ AAA PROM VERSION NUMBER: V _ _ _ . _ _ _ _ _ F			
SETTING #	**MNEMONIC**	**DESCRIPTION**	**USER SETTING**
402	ALARM	Configure alarm outputs	
403	PICKUP	Pickup current (Negative sequence)	Amps
404	K2	K factor	Sec.
LOSS OF EXCITATION – SUPERVISION: 40			
501	SELV2SUP	Select V2 supervision of 40	
LOSS OF EXCITATION – ZONE 1: 40-1			
601	TRIP	Configure trip outputs	
602	ALARM	Configure alarm outputs	
603	CENTER	Center of characteristic	Ohms
604	RADIUS	Radius of characteristic	Ohms
605	TL12	Timer TL12 setting	Sec.
LOSS OF EXCITATION – ZONE 2: 40-2			
701	TRIP	Configure trip outputs	
702	ALARM	Configure alarm outputs	
703	CENTER	Center of characteristic	Ohms
704	RADIUS	Radius of characteristic	Ohms
705	TL13	Timer TL13 setting	Sec.
ANTI-MOTORING #1: 32-1			
801	TRIP	Configure trip outputs	
802	ALARM	Configure alarm outputs	
803	SQ TR EN	Enable sequential trip	
804	REV PWR	Reverse power pickup	Watts
805	TL1	Timer TL1 setting	Sec.
ANTI-MOTORING #2: 32-2			
901	TRIP	Configure trip outputs	
902	ALARM	Configure alarm outputs	
903	REV PWR	Reverse power pickup	Watts
904	TL2	Timer TL2 setting	Sec.
OVERCURRENT WITH VOLTAGE RESTRAINT: 51V			
1001	TRIP	Configure trip outputs	

Table 2–5: DGP*AAA SETTINGS TABLE (Sheet 3 of 5)**

LOCATION: GENERATOR NUMBER: RELAY MODEL NUMBER: DGP _ _ _ AAA PROM VERSION NUMBER: V _ _ _ . _ _ _ _ _ F			
SETTING #	**MNEMONIC**	**DESCRIPTION**	**USER SETTING**
1002	ALARM	Configure alarm outputs	
1003	PICKUP	Pickup current	Amps
1004	TIME FAC	Time factor	Sec.
STATOR GROUND – ZONE 1: 64G1			
1101	TRIP	Configure trip outputs	
1102	ALARM	Configure alarm outputs	
1103	PICKUP	Pickup voltage	Volts
1104	TL4	Timer TL4 setting	Sec.
STATOR GROUND – ZONE 1: 64G2			
1201	TRIP	Configure trip outputs	
1202	ALARM	Configure alarm outputs	
1203	TL5	Timer TL5 setting	Sec.
OVEREXCITATION – ALARM: 24A			
1301	ALARM	Configure alarm outputs	
1302	PICKUP	Pickup (V/Hz)	Per Unit
1303	TL6	Timer TL6 setting	Sec.
OVEREXCITATION – TRIP: 24T			
1401	TRIP ON	Configure trip outputs (on-line)	
1402	TRIP OFF	Configure trip outputs (off-line)	
1403	ALARM	Configure alarm outputs	
1404	CURVE #	Curve number (Inverse characteristic)	
1405	INV PU	Pickup - V/Hz (Inverse characteristic)	Per Unit
1406	TIME FAC	Time factor	Sec.
1407	INST PU	Pickup - V/Hz (Instantaneous)	Per Unit
1408	TL7	Timer TL7 setting	Sec.
1409	RESET	Reset time	Sec.
OVERVOLTAGE: 59			
1501	TRIP	Configure trip outputs	
1502	ALARM	Configure alarm outputs	
1503	PICKUP	Inverse function pickup voltage (positive- sequence)	Volts

Table 2–5: DGP*AAA SETTINGS TABLE (Sheet 4 of 5)**

LOCATION: GENERATOR NUMBER: RELAY MODEL NUMBER: DGP _ _ _ AAA PROM VERSION NUMBER: V _ _ _ . _ _ _ _ _ F			
SETTING #	**MNEMONIC**	**DESCRIPTION**	**USER SETTING**
1504	TIME FAC	Time factor	Sec.
OVER/UNDER FREQUENCY VOLTAGE CUTOFF: 81			
1601	UVCUTOFF	Undervoltage cutoff level for functions 81	Volts
UNDERFREQUENCY SETPOINT 1: 81-1U			
1701	TRIP	Configure trip outputs	
1702	ALARM	Configure alarm outputs	
1703	SET PNT	Set point	Hz
1704	TL8	Timer TL8 setting	Sec.
UNDERFREQUENCY SETPOINT 2: 81-2U			
1801	TRIP	Configure trip outputs	
1802	ALARM	Configure alarm outputs	
1803	SET PNT	Set point	Hz
1804	TL9	Timer TL9 setting	Sec.
UNDERFREQUENCY SETPOINT 3: 81-3U			
1901	TRIP	Configure trip outputs	
1902	ALARM	Configure alarm outputs	
1903	SET PNT	Set point	Hz
1904	TL10	Timer TL10 setting	Sec.
UNDERFREQUENCY SETPOINT 4: 81-4U			
2001	TRIP	Configure trip outputs	
2002	ALARM	Configure alarm outputs	
2003	SET PNT	Set point	Hz
2004	TL11	Timer TL11 setting	Sec.
OVERFREQUENCY SETPOINT 1: 81-1O			
2101	TRIP	Configure trip outputs	
2102	ALARM	Configure alarm outputs	
2103	SET PNT	Set point	Hz
2104	TL15	Timer TL15 setting	Sec.
OVERFREQUENCY SETPOINT 2: 81-2O			
2201	TRIP	Configure trip outputs	

Table 2–5: DGP*AAA SETTINGS TABLE (Sheet 5 of 5)**

LOCATION: GENERATOR NUMBER: RELAY MODEL NUMBER: DGP _ _ _ AAA PROM VERSION NUMBER: V _ _ _ . _ _ _ _ _ F			
SETTING #	**MNEMONIC**	**DESCRIPTION**	**USER SETTING**
2202	ALARM	Configure alarm outputs	
2203	SET PNT	Set point	Hz
2204	TL16	Timer TL16 setting	Sec.
OVERFREQUENCY SETPOINT 3: 81-3O			
2301	TRIP	Configure trip outputs	
2302	ALARM	Configure alarm outputs	
2303	SET PNT	Set point	Hz
2304	TL17	Timer TL17 setting	Sec.
OVERFREQUENCY SETPOINT 4: 81-4O			
2401	TRIP	Configure trip outputs	
2402	ALARM	Configure alarm outputs	
2403	SET PNT	Set point	Hz
2404	TL18	Timer TL18 setting	Sec.
DIGITAL INPUT: DIG INP			
2501	SELBKDI1	Select blocking action by input DI1	
2502	DI3 TRIP	Configure trip outputs	
2503	DI3 ALRM	Configure alarm outputs	
2504	DI4 TRIP	Configure trip outputs	
2505	DI4 ALRM	Configure alarm outputs	
VOLTAGE TRANSFORMER FUSE FAILURE: VTFF			
2601	VTFF	Enable/Disable VTFF	
ACCIDENTAL ENERGIZATION: AE			
2701	TRIP	Configure trip outputs	
2702	ALARM	Configure alarm outputs	
2703	AE ARM	Arming logic, Accidental Energization	

Table 2–6: DGP*ABA SETTINGS TABLE (Sheet 1 of 5)**

LOCATION:		GENERATOR NUMBER:	
RELAY MODEL NUMBER: DGP _ _ _ ABA		PROM VERSION NUMBER: V _ _ _ . _ _ _ _ _ J	
SETTING #	**MNEMONIC**	**DESCRIPTION**	**USER SETTING**
CONFIGURATION: CONFIG			
101	UNITID	Unit ID number	
102	SYSFREQ	System Frequency	Hz
103	SEL TVM	Select Trip Voltage Monitoring	
104	SEL TCM	Select Trip Current Monitoring	
105	SELPRIM	Select Primary/Secondary units	
106	CT RATIO	Current Transformer Ratio	
107	VT RATIO	Voltage Transformer Ratio	
108	COMMPORT	Communications Port	
109	PHASE	Phase Rotation	
110	TIMESYNC	Time Synchronizing source	
111	NUM FLTS	Number of Fault events stored	
114	NOM VOLT	Nominal Voltage of generator	Volts
115	RATEDCUR	Rated Current of generator	Amps
116	VT CONN	Type of VT connection	
117	NCTRATIO	Current Transformer Ratio (Neutral)	
STATOR DIFFERENTIAL: 87G			
201	TRIP	Configure trip outputs	
202	ALARM	Configure alarm outputs	
203	K1	K factor	%
204	PICKUP	Pickup level	Amps
CURRENT UNBALANCE – ALARM: 46A			
301	ALARM	Configure alarm outputs	
302	PICKUP	Pickup current (Negative sequence)	Amps
303	TL14	Timer TL14 setting	Sec.
CURRENT UNBALANCE – TRIP: 46T			
401	TRIP	Configure trip outputs	
402	ALARM	Configure alarm outputs	

Table 2–6: DGP*ABA SETTINGS TABLE (Sheet 2 of 5)**

LOCATION: RELAY MODEL NUMBER: DGP _ _ _ ABA		GENERATOR NUMBER: PROM VERSION NUMBER: V _ _ _ . _ _ _ _ _ J	
SETTING #	**MNEMONIC**	**DESCRIPTION**	**USER SETTING**
403	PICKUP	Pickup current (Negative sequence)	Amps
404	K2	K factor	Sec.
LOSS OF EXCITATION – SUPERVISION: 40			
501	SELV2SUP	Select V2 supervision of 40	
LOSS OF EXCITATION – ZONE 1: 40-1			
601	TRIP	Configure trip outputs	
602	ALARM	Configure alarm outputs	
603	CENTER	Center of characteristic	Ohms
604	RADIUS	Radius of characteristic	Ohms
605	TL12	Timer TL12 setting	Sec.
LOSS OF EXCITATION – ZONE 2: 40-2			
701	TRIP	Configure trip outputs	
702	ALARM	Configure alarm outputs	
703	CENTER	Center of characteristic	Ohms
704	RADIUS	Radius of characteristic	Ohms
705	TL13	Timer TL13 setting	Sec.
ANTI-MOTORING: 32-1			
801	TRIP	Configure trip outputs	
802	ALARM	Configure alarm outputs	
803	SQ TR EN	Enable sequential trip	
804	REV PWR	Reverse power pickup	Watts
805	TL1	Timer TL1 setting	Sec.
OVERCURRENT WITH VOLTAGE RESTRAINT: 51V			
1001	TRIP	Configure trip outputs	
1002	ALARM	Configure alarm outputs	
1003	PICKUP	Pickup current	Amps
1004	TIME FAC	Time factor	Sec.
STATOR GROUND – ZONE 1: 64G1			
1101	TRIP	Configure trip outputs	
1102	ALARM	Configure alarm outputs	

Table 2–6: DGP*ABA SETTINGS TABLE (Sheet 3 of 5)**

LOCATION: GENERATOR NUMBER: RELAY MODEL NUMBER: DGP _ _ _ ABA PROM VERSION NUMBER: V _ _ _ . _ _ _ _ _ J			
SETTING #	**MNEMONIC**	**DESCRIPTION**	**USER SETTING**
1103	PICKUP	Pickup voltage	Volts
1104	TL4	Timer TL4 setting	Sec.
OVEREXCITATION – ALARM: 24A			
1301	ALARM	Configure alarm outputs	
1302	PICKUP	Pickup (V/Hz)	Per Unit
1303	TL6	Timer TL6 setting	Sec.
OVEREXCITATION – TRIP: 24T			
1401	TRIP ON	Configure trip outputs (on-line)	
1402	TRIP OFF	Configure trip outputs (off-line)	
1403	ALARM	Configure alarm outputs	
1404	CURVE #	Curve number (Inverse characteristic)	
1405	INV PU	Pickup - V/Hz (Inverse characteristic)	Per Unit
1406	TIME FAC	Time factor	Sec.
1407	INST PU	Pickup - V/Hz (Instantaneous)	Per Unit
1408	TL7	Timer TL7 setting	Sec.
1409	RESET	Reset time	Sec.
OVERVOLTAGE: 59			
1501	TRIP	Configure trip outputs	
1502	ALARM	Configure alarm outputs	
1503	PICKUP	Inverse function pickup voltage (positive- sequence)	Volts
1504	TIME FAC	Time factor	Sec.
1505	CURVE#	Curve Number (1 = Inverse; 2 = Definite Time)	
OVER/UNDER FREQUENCY VOLTAGE CUTOFF: 81			
1601	UVCUTOFF	Undervoltage cutoff level for functions 81	Volts
UNDERFREQUENCY SETPOINT 1: 81-1U			
1701	TRIP	Configure trip outputs	
1702	ALARM	Configure alarm outputs	
1703	SET PNT	Set point	Hz
1704	TL8	Timer TL8 setting	Sec.

Table 2–6: DGP*ABA SETTINGS TABLE (Sheet 4 of 5)**

LOCATION:		GENERATOR NUMBER:	
RELAY MODEL NUMBER: DGP _ _ _ ABA		PROM VERSION NUMBER: V _ _ _ . _ _ _ _ _ J	
SETTING #	**MNEMONIC**	**DESCRIPTION**	**USER SETTING**
UNDERFREQUENCY SETPOINT 2: 81-2U			
1801	TRIP	Configure trip outputs	
1802	ALARM	Configure alarm outputs	
1803	SET PNT	Set point	Hz
1804	TL9	Timer TL9 setting	Sec.
OVERFREQUENCY SETPOINT 1: 81-1O			
2101	TRIP	Configure trip outputs	
2102	ALARM	Configure alarm outputs	
2103	SET PNT	Set point	Hz
2104	TL15	Timer TL15 setting	Sec.
OVERFREQUENCY SETPOINT 2: 81-2O			
2201	TRIP	Configure trip outputs	
2202	ALARM	Configure alarm outputs	
2203	SET PNT	Set point	Hz
2204	TL16	Timer TL16 setting	Sec.
DIGITAL INPUT: DIG INP			
2501	SELBKDI1	Select blocking action by input DI1	
2502	DI3 TRIP	Configure trip outputs	
2503	DI3 ALRM	Configure alarm outputs	
2504	DI3 TIMR	Pickup Delay, DI3 timer	sec.
2505	DI4 TRIP	Configure trip outputs	
2506	DI4 ALRM	Configure alarm outputs	
2507	DI4 TIMR	Pickup delay, DI4 timer	sec.
2508	DI6 FUNC	Define DI6 Function	
VOLTAGE TRANSFORMER FUSE FAILURE: VTFF			
2601	VTFF	Enable/Disable VTFF	
ACCIDENTAL ENERGIZATION: AE			
2701	TRIP	Configure trip outputs	
2702	ALARM	Configure alarm outputs	
2703	AE ARM	Arming logic, Accidental Energization	

Table 2–6: DGP*ABA SETTINGS TABLE (Sheet 5 of 5)**

LOCATION:		GENERATOR NUMBER:	
RELAY MODEL NUMBER: DGP _ _ _ ABA		PROM VERSION NUMBER: V _ _ _ . _ _ _ _ _ J	
SETTING #	**MNEMONIC**	**DESCRIPTION**	**USER SETTING**
GROUND OVERCURRENT: 51GN			
2801	TRIP	Configure trip outputs	
2802	ALARM	Configure alarm outputs	
2803	PICKUP	Pickup current	Amps
2804	TIME FAC	Time factor	sec.
UNDERVOLTAGE: 27			
2901	TRIP	Configure trip outputs	
2902	ALARM	Configure alarm outputs	
2903	PICKUP	Pickup voltage (Positive sequence)	Volts
2904	TIME FAC	Time factor	sec.
2905	CURVE #	Curve number (1-Inverse, 2-Def. Time)	
UNDERVOLTAGE – THIRD HARMONIC: 27TN			
3001	TRIP	Configure trip outputs	
3002	ALARM	Configure alarm outputs	
3003	PICKUP	Pickup voltage (3rd Harmonic at generator neutral)	Volts
3004	TL20	Timer TL20 setting	Sec.
3005	FORPWR-L	Lower limit of Forward Power window	Watts
3006	FORPWR-H	Upper limit of Forward Power window	Watts

Table 2–7: DGP*ACA SETTINGS TABLE (Sheet 1 of 6)**

LOCATION:		GENERATOR NUMBER:	
RELAY MODEL NUMBER: DGP _ _ _ _CA		PROM VERSION NUMBER: V _ _ _ . _ _ _ _ _ D	
SETTING #	**MNEMONIC**	**DESCRIPTION**	**USER SETTING**
CONFIGURATION: CONFIG			
101	UNITID	Unit ID number	
102	SYSFREQ	System Frequency	Hz
103	SEL TVM	Select Trip Voltage Monitoring	
104	SEL TCM	Select Trip Current Monitoring	
105	SELPRIM	Select Primary/Secondary units	
106	CT RATIO	Current Transformer Ratio	
107	VT RATIO	Voltage Transformer Ratio	
108	COMMPORT	Communications Port	
109	PHASE	Phase Rotation	
110	TIMESYNC	Time Synchronizing source	
111	NUM FLTS	Number of Fault events stored	
112	PREFLT	Number of prefault cycles stored	Cycles
113	OSC TRIG	External oscillography trigger	
114	NOM VOLT	Nominal Voltage of generator	Volts
115	RATEDCUR	Rated Current of generator	Amps
116	VT CONN	Type of VT connection	
117	NCTRATIO	Current Transformer Ratio (Neutral)	
STATOR DIFFERENTIAL: 87G			
201	TRIP	Configure trip outputs	
202	ALARM	Configure alarm outputs	
203	K1	K factor	%
204	PICKUP	Pickup level	Amps
CURRENT UNBALANCE – ALARM: 46A			
301	ALARM	Configure alarm outputs	
302	PICKUP	Pickup current (Negative sequence)	Amps
303	TL14	Timer TL14 setting	Sec.

Table 2–7: DGP*ACA SETTINGS TABLE (Sheet 2 of 6)

LOCATION:		GENERATOR NUMBER:	
RELAY MODEL NUMBER: DGP _ _ _ _CA		PROM VERSION NUMBER: V _ _ _ . _ _ _ _ _ D	
SETTING #	**MNEMONIC**	**DESCRIPTION**	**USER SETTING**
CURRENT UNBALANCE – TRIP: 46T			
401	TRIP	Configure trip outputs	
402	ALARM	Configure alarm outputs	
403	PICKUP	Pickup current (Negative sequence)	Amps
404	K2	K factor	Sec.
LOSS OF EXCITATION – SUPERVISION: 40			
501	SELV2SUP	Select V2 supervision of 40	
LOSS OF EXCITATION – ZONE 1: 40-1			
601	TRIP	Configure trip outputs	
602	ALARM	Configure alarm outputs	
603	CENTER	Center of characteristic	Ohms
604	RADIUS	Radius of characteristic	Ohms
605	TL12	Timer TL12 setting	Sec.
LOSS OF EXCITATION – ZONE 2: 40-2			
701	TRIP	Configure trip outputs	
702	ALARM	Configure alarm outputs	
703	CENTER	Center of characteristic	Ohms
704	RADIUS	Radius of characteristic	Ohms
705	TL13	Timer TL13 setting	Sec.
ANTI-MOTORING #1: 32-1			
801	TRIP	Configure trip outputs	
802	ALARM	Configure alarm outputs	
803	SQ TR EN	Enable sequential trip	
804	REV PWR	Reverse power pickup	Watts
805	TL1	Timer TL1 setting	Sec.
ANTI-MOTORING #2: 32-2			
901	TRIP	Configure trip outputs	
902	ALARM	Configure alarm outputs	
903	REV PWR	Reverse power pickup	Watts
904	TL2	Timer TL2 setting	Sec.

Table 2–7: DGP*ACA SETTINGS TABLE (Sheet 3 of 6)

LOCATION:		GENERATOR NUMBER:	
RELAY MODEL NUMBER: DGP _ _ _ _CA		PROM VERSION NUMBER: V _ _ _ . _ _ _ _ _ D	
SETTING #	**MNEMONIC**	**DESCRIPTION**	**USER SETTING**
OVERCURRENT WITH VOLTAGE RESTRAINT: 51V			
1001	TRIP	Configure trip outputs	
1002	ALARM	Configure alarm outputs	
1003	PICKUP	Pickup current	Amps
1004	TIME FAC	Time factor	Sec.
STATOR GROUND – ZONE 1: 64G1			
1101	TRIP	Configure trip outputs	
1102	ALARM	Configure alarm outputs	
1103	PICKUP	Pickup voltage	Volts
1104	TL4	Timer TL4 setting	Sec.
STATOR GROUND – ZONE 1: 64G2			
1201	TRIP	Configure trip outputs	
1202	ALARM	Configure alarm outputs	
1203	TL5	Timer TL5 setting	Sec.
OVEREXCITATION – ALARM: 24A			
1301	ALARM	Configure alarm outputs	
1302	PICKUP	Pickup (V/Hz)	Per Unit
1303	TL6	Timer TL6 setting	Sec.
OVEREXCITATION – TRIP: 24T			
1401	TRIP ON	Configure trip outputs (on-line)	
1402	TRIP OFF	Configure trip outputs (off-line)	
1403	ALARM	Configure alarm outputs	
1404	CURVE #	Curve number (Inverse characteristic)	
1405	INV PU	Pickup - V/Hz (Inverse characteristic)	Per Unit
1406	TIME FAC	Time factor	Sec.
1407	INST PU	Pickup - V/Hz (Instantaneous)	Per Unit
1408	TL7	Timer TL7 setting	Sec.
1409	RESET	Reset time	Sec.
OVERVOLTAGE: 59			
1501	TRIP	Configure trip outputs	

Table 2–7: DGP*ACA SETTINGS TABLE (Sheet 4 of 6)

LOCATION:		GENERATOR NUMBER:	
RELAY MODEL NUMBER: DGP _ _ _ _CA		PROM VERSION NUMBER: V _ _ _ . _ _ _ _ _ D	
SETTING #	**MNEMONIC**	**DESCRIPTION**	**USER SETTING**
1502	ALARM	Configure alarm outputs	
1503	PICKUP	Inverse function pickup voltage (positive- sequence)	Volts
1504	TIME FAC	Time factor	Sec.
1505	CURVE#	Curve Number (1 = Inverse; 2 = Definite Time)	
1506	INST PU	Instantaneous Pickup Voltage (positive-sequence)	Volts
OVER/UNDER FREQUENCY VOLTAGE CUTOFF: 81			
1601	UVCUTOFF	Undervoltage cutoff level for functions 81	Volts
UNDERFREQUENCY SETPOINT 1: 81-1U			
1701	TRIP	Configure trip outputs	
1702	ALARM	Configure alarm outputs	
1703	SET PNT	Set point	Hz
1704	TL8	Timer TL8 setting	Sec.
UNDERFREQUENCY SETPOINT 2: 81-2U			
1801	TRIP	Configure trip outputs	
1802	ALARM	Configure alarm outputs	
1803	SET PNT	Set point	Hz
1804	TL9	Timer TL9 setting	Sec.
UNDERFREQUENCY SETPOINT 3: 81-3U			
1901	TRIP	Configure trip outputs	
1902	ALARM	Configure alarm outputs	
1903	SET PNT	Set point	Hz
1904	TL10	Timer TL10 setting	Sec.
UNDERFREQUENCY SETPOINT 4: 81-4U			
2001	TRIP	Configure trip outputs	
2002	ALARM	Configure alarm outputs	
2003	SET PNT	Set point	Hz
2004	TL11	Timer TL11 setting	Sec.
OVERFREQUENCY SETPOINT 1: 81-1O			
2101	TRIP	Configure trip outputs	
2102	ALARM	Configure alarm outputs	

Table 2–7: DGP*ACA SETTINGS TABLE (Sheet 5 of 6)**

LOCATION:		GENERATOR NUMBER:	
RELAY MODEL NUMBER: DGP _ _ _ _CA		PROM VERSION NUMBER: V _ _ _ . _ _ _ _ _ D	
SETTING #	**MNEMONIC**	**DESCRIPTION**	**USER SETTING**
2103	SET PNT	Set point	Hz
2104	TL15	Timer TL15 setting	Sec.
OVERFREQUENCY SETPOINT 2: 81-2O			
2201	TRIP	Configure trip outputs	
2202	ALARM	Configure alarm outputs	
2203	SET PNT	Set point	Hz
2204	TL16	Timer TL16 setting	Sec.
OVERFREQUENCY SETPOINT 3: 81-3O			
2301	TRIP	Configure trip outputs	
2302	ALARM	Configure alarm outputs	
2303	SET PNT	Set point	Hz
2304	TL17	Timer TL17 setting	Sec.
OVERFREQUENCY SETPOINT 4: 81-4O			
2401	TRIP	Configure trip outputs	
2402	ALARM	Configure alarm outputs	
2403	SET PNT	Set point	Hz
2404	TL18	Timer TL18 setting	Sec.
DIGITAL INPUT: DIG INP			
2501	SELBKDI1	Select blocking action by input DI1	
2502	DI3 TRIP	Configure trip outputs	
2503	DI3 ALRM	Configure alarm outputs	
2504	DI3 TIMR	Pickup Delay, DI3 timer	sec.
2505	DI4 TRIP	Configure trip outputs	
2506	DI4 ALRM	Configure alarm outputs	
2507	DI4 TIMR	Pickup delay, DI4 timer	sec.
2508	DI6 FUNC	Define DI6 Function	
VOLTAGE TRANSFORMER FUSE FAILURE: VTFF			
2601	VTFF	Enable/Disable VTFF	
ACCIDENTAL ENERGIZATION: AE			
2701	TRIP	Configure trip outputs	

Table 2–7: DGP*ACA SETTINGS TABLE (Sheet 6 of 6)

LOCATION:		GENERATOR NUMBER:	
RELAY MODEL NUMBER: DGP _ _ _ _CA		PROM VERSION NUMBER: V _ _ _ . _ _ _ _ _ D	
SETTING #	**MNEMONIC**	**DESCRIPTION**	**USER SETTING**
2702	ALARM	Configure alarm outputs	
2703	AE ARM	Arming logic, Accidental Energization	
GROUND OVERCURRENT: 51GN			
2801	TRIP	Configure trip outputs	
2802	ALARM	Configure alarm outputs	
2803	PICKUP	Pickup current	Amps
2804	TIME FAC	Time factor	sec.
UNDERVOLTAGE: 27			
2901	TRIP	Configure trip outputs	
2902	ALARM	Configure alarm outputs	
2903	PICKUP	Pickup voltage (Positive sequence)	Volts
2904	TIME FAC	Time factor	sec.
2905	CURVE #	Curve number (1-Inverse, 2-Def. Time)	
UNDERVOLTAGE – THIRD HARMONIC: 27TN			
3001	TRIP	Configure trip outputs	
3002	ALARM	Configure alarm outputs	
3003	PICKUP	Pickup voltage (3rd Harmonic at generator neutral)	Volts
3004	TL20	Timer TL20 setting	Sec.
3005	FORPWR-L	Lower limit of Forward Power window	Watts
3006	FORPWR-H	Upper limit of Forward Power window	Watts

3.1.1 WARNING

CAUTION

Power down the relay by removing one of the connection plugs or turn both power switches to OFF before removng or inserting modules. Failure to do so can permanently damage the relay.

3.1.2 CONSTRUCTION

The case that houses the electronic modules is constructed from an aluminum alloy. It consists of a main frame with side mounting brackets, a front cover and a rear cover.

The front cover, comprised of a metal frame with plate glass, is pivoted on the top and is opened from the bottom by way of two spring-loaded latches. The door is constrained from coming off by tabs that require the door to be unlatched and lifted slightly to be removed. A push-button extender installed into the plate glass makes it possible to clear the display without removing the front cover.

The rear cover supports terminal blocks that are used in making external connections to the case. The modules are mounted vertically inside the case and are supported by sockets on the motherboard within the case. In addition to providing this mechanical support, the sockets also offer the means of making the electrical connection to the modules. The modules are further restrained inside the case by the front cover.

Proper alignment of the module with respect to the socket is maintained by slotted guides, one guide above and one guide beneath each module, with the exception of the magnetics module, MGM and MMI modules, which require two guides above and two beneath.

3.1.3 ELECTRICAL CONNECTIONS & INTERNAL WIRING

As mentioned earlier, electrical connections are made to the case through eight terminal blocks mounted on the rear cover plate. Each block contains 14 terminal points, which consist of a #6 screw threaded into a flat contact plate. **Each terminal is rated for a maximum of two connections. Exceeding this will violate UL specifications for two wires per terminal.**

Connection to the MGM module is made by means of two connector sockets: an 8-contact current block and a 104-pin signal block. The current block contacts are rated to handle current transformer (CT) secondary currents. They are shorted upon removal of the MGM module.

3.1.4 IDENTIFICATION

The DGP model number label is located on the outside of the front cover and on the right-hand sidesheet inside the case. A marking strip indicating the name and position of every module in a case is included on the front center of the case. It is placed to be read when the front cover is removed.

The terminal blocks located on the rear cover plate are uniquely identified by a two-letter code found directly beneath the outermost edge of each terminal block. Also, the terminal points (1 through 14) are identified by stamped numbers.

Connector PL1 is used for serial communication between the DGP and the PC/Modem. Connector PL2 is used to output sequence of events (SOE) to a serial printer or a DEC100 unit for additional auxiliary contacts output. PL3 is used for IRIG-B signal input to the DGP. Note that the PL2 and PL3 connectors are not included on all DGP models; see Section 1.1.2: ORDER CODES & SELECTION GUIDE on page 1–2 for details.

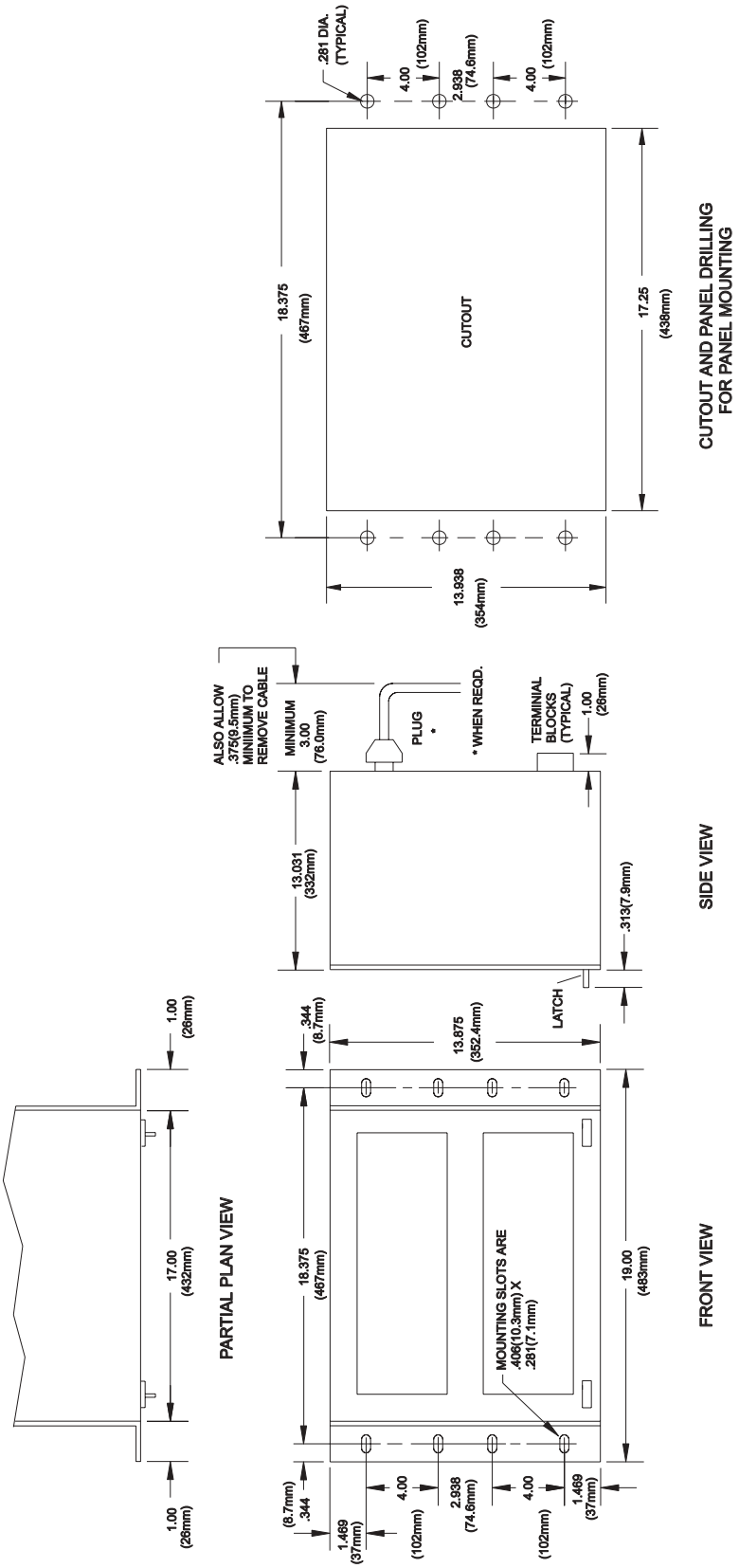

Figure 3–1: DGP OUTLINE DRAWING

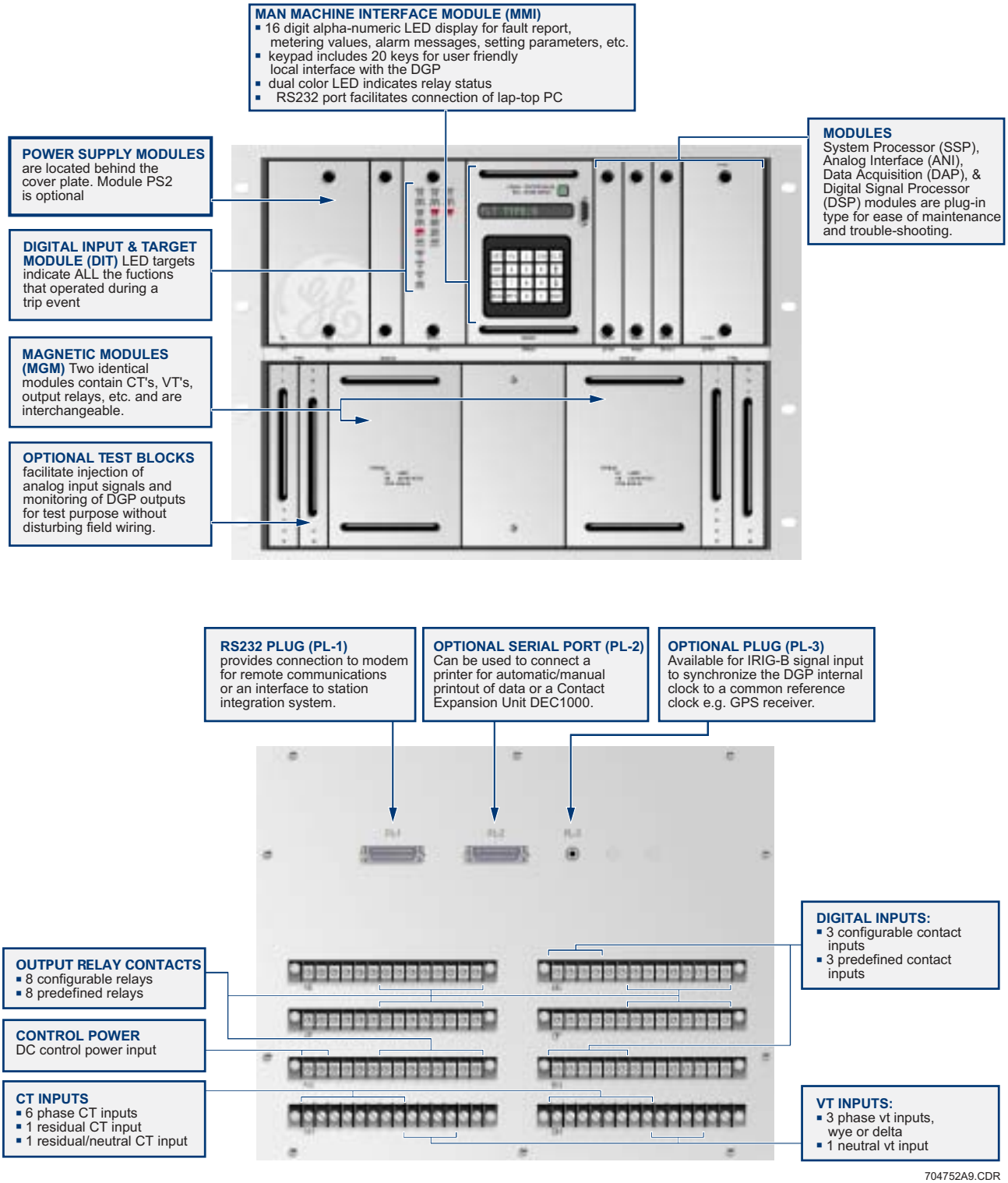

Figure 3–2: FRONT AND REAR VIEW

3.2.1 WARNING

CAUTION

This relay contains electronic components that could be damaged by electrostatic discharge currents. The main source of electrostatic discharge currents is the human body, and the conditions of low humidity, carpeted floors, and isolating shoes are conducive to the generation of electrostatic discharge currents. Where these conditions exist, care must be exercised when removing and/or handling the modules. The persons handling the modules must ensure that their body charge has been discharged by touching some surface at ground potential before touching any of the components on the modules.

3.2.2 BASIC CONSTRUCTION

Each module consists of a printed-circuit board and front panel. Two knobs are provided on the front panel for removing and inserting the module. Electrical connection is made by the 96 pins of the Eurocard connector located at the back of the board.

3.2.3 IDENTIFICATION

Each module has its own identification number, consisting of a three-letter code followed by a three-digit number. These are found at the bottom of each front panel.

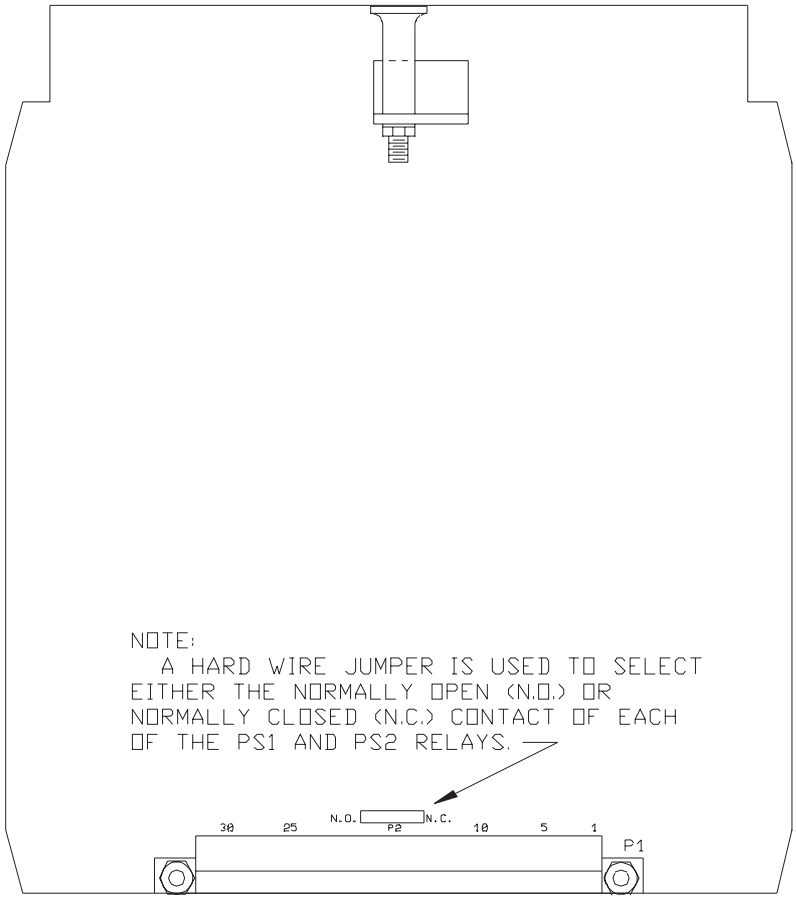

Figure 3–3: DGP POWER SUPPLY MODULE

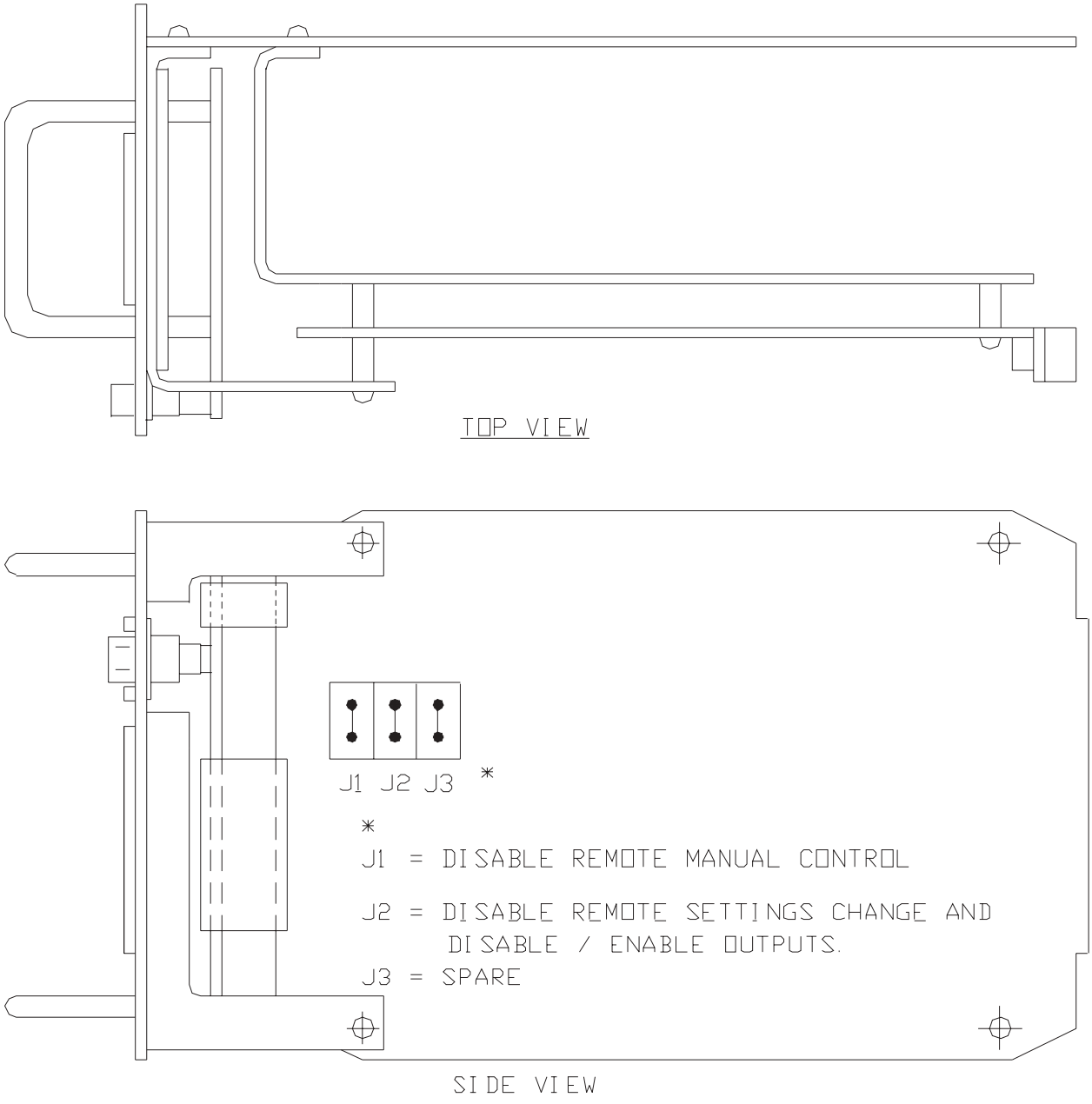

Figure 3–4: DGP MMI MODULE

3.3.1 DESCRIPTION

The XTM test plugs are designed specifically for post-installation testing of the DGP system. As many as four plugs can be used at one time: two XTM28L1 (left-hand plugs) and two XTM28R1 (right-hand plugs), each providing access to fourteen relay-side and fourteen system-side points. The system-side points are designated "S" and the relay-side points are designated "R". The plugs are keyed by the contact finger arrangement so that there can be no accidental interchange between the left-hand and right-hand plugs.

The plugs are fitted with a sliding handle that swings out to facilitate wiring to the terminals. The terminals consist of #8 screws threaded into flat contact plates. The handles each have a tab on the outside edge to guide the wire dress of the test leads.

Not all external connections to the DGP system are wired through the test receptacle.

3.3.2 TERMINAL DESIGNATION

The test receptacle and connection plugs are located to the extreme left and right on the lower unit. The left-hand plugs are labeled as TP1 with terminals 1 through 28. The right hand plugs are labeled TP2 with terminals 1 through 28. These points are designated on the elementary diagrams as TP1-1 (see Section 1.5: ELEMENTARY DIAGRAMS on page 1–24). The left-hand test plug (XTM28L1) terminals are labeled 1R through 14R and 1S through 14S for the relay side and system side, respectively, with the system side labeled in red. Similarly, the right-hand test plug (XTM28R1) terminals are labeled 15R through 28R and 15S through 28S.

3.3.3 XTM TEST-CIRCUIT CONNECTIONS

Test-circuit connections, designated as TP points in the elementary diagrams, should be made to the relay side of the test plug. Where it is desired to use available system quantities for testing (e.g. DC control power), jumpers may be inserted between the corresponding system-side and relay-side test plug terminals. Appropriate precautions should be taken when working with station battery DC power. Connections should be made to the test plugs prior to insertion into the DGP system.

3.3.4 TEST PLUG INSERTION

CAUTION

It is critical that jumpers be inserted on the system-side test plug terminals that are connected to the CT secondaries, as shown in Figure 1–9: ELEMENTARY DIAGRAM WITH TEST BLOCKS, WYE VTs. If these jumpers are left out, the resulting high voltages will present a serious hazard to personnel and may severely damage equipment.

To remove power from the relay, remove at least one of the connection plugs.

To insert the test plugs, the two connection plugs must first be removed. In so doing, electrical continuity is broken between the power system and the DGP for those signals that are wired through the test receptacle (refer to TP points on the elementary diagrams in Section 1.5: ELEMENTARY DIAGRAMS on page 1–24). For the terminals connected to the CT secondaries, shorting bars are included on the system side of the test receptacle. These are clearly visible through the transparent plastic face plate on the receptacle. The shorting bars make contact before the connection-plug contacts break during removal so that the CT secondaries are never open-circuited.

Four test plugs may be inserted at the same time giving access to all 56 terminals simultaneously. Otherwise, if using fewer than four test plugs, the remaining connection plugs may remain in the other receptacles.

When the test plugs are inserted into the receptacle, parts of the power system become isolated from the DGP. Refer to the elementary diagrams in Section 1.5: ELEMENTARY DIAGRAMS on page 1–24 for the TP points associated with each of the test plugs.

3.4.1 RECEIVING, HANDLING, & STORAGE

Immediately upon receipt, the equipment should be unpacked and examined for any damage sustained in transit. If damage resulting from rough handling is evident, file a damage claim at once with the transportation company and promptly notify the nearest GE Multilin Sales Office. If the equipment is not to be installed immediately, it should be stored indoors in a location that is dry and protected from dust, metallic chips, and severe atmospheric conditions.

3.4.2 ENVIRONMENT

The location should be clean and dry, free from dust and excessive vibration, and well lighted to facilitate inspection and testing.

3.4.3 MOUNTING

The DGP case has been designed for standard rack mounting. The case measures eight rack units (8 RU) in height. Refer to Figure 3–1: DGP OUTLINE DRAWING on page 3–2 for the outline and mounting dimensions.

3.4.4 EXTERNAL CONNECTIONS

External connections are made according to the elementary diagrams in Section 1.5: ELEMENTARY DIAGRAMS on page 1–24. These are general diagrams incorporating all of the available options. Connection need not be made to those terminals associated with options that will not be used.

3.4.5 EXTERNAL CONNECTIONS TEST

CAUTION

The DGP system should be disabled to prevent tripping of the of the circuit breakers until it has been determined that the unit is properly connected. This can be accomplished in two ways: one is to de-energize the trip circuit connected to the relay; the other is to disable the DGP outputs by setting the DISABLE OUTPUTS function to YES prior to installation.

An overall check of current transformer polarities, potential transformer polarities, and connections to the DGP can be made prior to placing the system in service by using the system voltages and load current while monitoring the display for Present Values. Obtaining the DGP present values can be done in two ways.

1. Access the **INF** category through the keypad. Once the **INF** category is chosen use the [↑] key to select the **PRESENT VALUES** menu item. Scrolling through the present values will allow you to determine if the relay is wired correctly.
2. Press the [CLR] key and allow the DGP to automatically scroll through the present values.

3.4.6 SURGE GROUND CONNECTIONS

CAUTION

Terminal BH14 must be tied to station ground, as shown in the elementary diagrams in Section 1.5 ELEMENTARY DIAGRAMS on page 1–24. The connection to the ground bus must be made as short as possible, preferably 10 inches or less, using #12 wire or larger.

4.1.1 WARNING

CAUTION

POWER DOWN THE RELAY BEFORE REMOVING OR INSERTING MODULES. FAILURE TO DO SO CAN PERMANENTLY DAMAGE THE RELAY!

4.1.2 GENERAL

This section is a guide for testing the relay. It is not necessary that these tests be performed for incoming inspection. The relay has been tested at the factory with automated test equipment. The DGP is a digital relay controlled by self-checking software. If a system failure is detected, it will be reported through the MMI and remote communications.

The following tests include: Relay status self test and display and MMI self test. Tests of the protection functions and measuring accuracy are also included and can be performed at the user's discretion. Protection functions that end with an asterisk (*) are available on certain models only – see the DGP model list in Section 1.1.2: ORDER CODES & SELECTION GUIDE on page 1–2.

a) GENERAL TESTS

- T1: MMI Status and Display Tests (Self-tests)
- T2: Digital Output Tests
- T3: Digital Input Tests
- T4: AC System Input Test

b) PROTECTION TESTS

- T5: Generator Differential, 87G
- T6: Current Unbalance Alarm, 46A
- T7: Current Unbalance Trip, 46T
- T8: Loss of Excitation, 40-1
- T9: Loss of Excitation, 40-2
- T10: Anti-Motoring, 32-1
- T11: Anti-Motoring, 32-2 *****
- T12: Time Overcurrent with Voltage Restraint, 51V
- T13: Accidental Energization, AE
- T14: Stator Ground Zone1, 64G1
- T15: Stator Ground Zone2, 64G2 *****
- T16: Overexcitation (Volts/Hz) Alarm, 24A
- T17: Overexcitation (Volts/Hz) Trip, 24T
- T18: Overvoltage, 59
- T19: Underfrequency, 81-1U
- T20: Underfrequency, 81-2U
- T21: Underfrequency, 81-3U *****
- T22: Underfrequency, 81-4U *****
- T23: Overfrequency, 81-1O
- T24: Overfrequency, 81-2O
- T25: Overfrequency, 81-3O *****
- T26: Overfrequency, 81-4O *****
- T27: Voltage Transformer Fuse Failure, VTFF
- T28: TOC Ground Overcurrent, 51GN *****
- T29: Undervoltage, 27 *****
- T30: 3rd Harmonic Neutral Undervoltage, 27TN *****

***** Functions available in some models only.

4.2.1 TEST EQUIPMENT

1. Three-phase source of voltage and current operating from 30 to 80 Hz, with capability to add 3rd harmonic voltage to the fundamental
2. DC voltage source (Power supply)
3. Three AC voltmeters
4. Three AC ammeters
5. A continuity tester or Ohm meter
6. A PC compatible computer with a serial and mouse port
7. An RS232 null modem cable to connect the PC to the DGP system
8. A Precision Timer for testing timed events.

The specific requirements of the equipment are given in the text of this section and the associated circuit diagrams. The three-phase AC sinusoidal voltage must be balanced and undistorted. Similarly, the DC power should come from a good source with less than 5% ripple. A "good source" is one that is within the voltage range shown in Chapter 7: SPECIFICATIONS.

As an alternative, a three-phase electronic test source may be used. In many cases, these devices enable the test circuits to be simplified.

4.2.2 DRAWINGS & REFERENCES

a) DRAWINGS

- Elementary Diagrams in Section 1.5: ELEMENTARY DIAGRAMS on page 1–24
- Figure 1–3: SIMPLE LOGIC DIAGRAM – 87G, 32, 27, 59, AND AE on page 1–13
- Figure 1–4: SIMPLE LOGIC DIAGRAM – 46, 40, AND 51V on page 1–14
- Figure 1–5: SIMPLE LOGIC DIAGRAM – 64G1, 64G2, 51GN, AND 24 on page 1–15
- Figure 1–6: SIMPLE LOGIC DIAGRAM – 81-O AND 81-U on page 1–16
- Figure 1–7: SIMPLE LOGIC DIAGRAM – VT FUSE FAILURE on page 1–17

b) REFERENCES

- Chapter 10: DGP-PC SOFTWARE
- The DGP default settings shown in Table 2–1: DGP SYSTEM SETTINGS & RATINGS on page 2–3

4.2.3 EQUIPMENT GROUNDING

All equipment used in testing the DGP relay should be connected to a common grounding point to provide noise immunity. This includes the voltage and current sources, as well as the DGP system itself. The common for surge protection is terminal BH14.

4.2.4 REQUIRED SETTINGS

Most tests will utilize the default Settings. If Setting changes are required, they will be listed prior to the test procedure. For periodic testing purposes, see the Chapter 5: PERIODIC TESTS for details on performing the relay test with user-specific settings.

4.3.1 PROCEDURE

1. To remove power from the relay, remove at least one of the connection plugs. For models without connection plugs, turn both DC Control switches to the OFF position.
2. The DGP tests are performed in the "test mode" of operation. The test mode selects and isolates various test functions and measuring units and routes their status to the output Test Pickup and Test Trip (DOR12 and DOR13) contacts. When the particular function under test has picked up, DOR12 (AF6—AG6) will operate. When the particular function under test has tripped, DOR13 (AF5—AG5) will operate.

   For the remainder of this test, DOR12 will be referred to as "test pickup" and DOR13 as "test trip".

CAUTION

The Digital Output contacts will chatter when the unit under test is near its threshold. DO NOT let it continue. Remove the test signal. A single contact closure is enough to determine that the unit picked up.

NOTE

SELECTED TRIP AND ALARM CONTACTS WILL ALSO OPERATE IN THE TEST MODE.

3. The trip-time settings listed in these tests do not include the 4 to 5 ms required for the output relay to operate. For very short trip times, this may become significant.
4. During the test, one or more of the electronic current sources may not be used. If the source is not used, it must be set to zero (0) *in addition to* being disabled. Also, the currents should always be set at or near zero (0) whenever a current source is powered ON or OFF.
5. The phase angles of the test sources are shown relative to phase A voltage. A positive (+) phase angle refers to the referenced quantity leading phase A voltage. A negative (–) phase angle refers to the referenced quantity lagging phase A voltage.
6. All test voltages are phase-to-ground measurements unless otherwise specified.
7. Typing an entry on the MMI keypad will be shown as [*KEY*] where *KEY* represents the alphanumeric label of the key to be pressed.

   For tests that require a setting change, the setting number will be shown in parentheses next to the setting, to facilitate direct access to the setting. This is performed by pressing the [SET] key, entering the four-digit the setting number (*nnnn*), then pressing the [ENT] key. The new setting may then be entered.

   At the end of testing, ensure that all settings are returned to initial values. Print them out and verify them before placing the relay in service. If a printer is not available, scroll through all settings with the MMI display and verify each one individually.

4.3.2 SETTING CHANGES

Setting changes required for a particular test will be listed before the test. A sample Setting change is shown below. Refer to Chapter 8: INTERFACE for further details on making Setting changes.

Example for changing the set point of the Underfrequency Unit #1 to 62.00 Hz.

1. Apply rated DC and wait for relay initialization to complete, as indicated by the green LED on the MMI.
2. Press the [ACT] key. Scroll with the arrow key until **ACT: ENTER PASSWORD** is displayed, then press the [ENT] key.

   If this is the first time the Settings Level functions are used, the password has the factory value "**1234.**". The decimal point is a character that can only be entered at the factory. This password must be changed before any Setting functions can be accessed. See Section 8.3.9: ACTIONS KEY [ACT] on page 8–7 for information on how to change the password.

3. Enter the current Settings Level password. If the password is not known, see Chapter 8: INTERFACE for information on how it can be viewed.

   When the correct password is entered, the message **SELECTED** is displayed.

4. Press the [SET] key.
5. Scroll with the arrow key until **SET: 81-1U** is displayed, then press the [ENT] key.
6. Scroll through the 81-1U settings until the **SET PNT = #.#** item appears.
7. Enter **62.00** on the keypad. The digits will display at half-intensity – this denotes that a change is made but not yet entered.
8. When the correct frequency is entered, press the [ENT] key. The input is now displayed at full intensity. This denotes that the change is entered into the settings buffer, but not permanently changed in the relay.
9. To finalize the setting change, press the [END] key followed by the [ENT] key. If the [END] and the [ENT] keys are not pressed after setting changes, the settings will *not* be stored into memory.
10. Restore Setting 1703: **SET PNT** back to its original value before beginning the test. It will be necessary to enter the Settings Level password again.

4.3.3 ENTERING THE TEST MODE

Before each test, it is necessary to place the relay in the test mode and select the function to be tested. The test mode is set as follows:

1. Apply rated DC and wait for relay initialization to complete (indicated by the green LED on the MMI).
2. Press the [ACT] key. Scroll with the arrow key until **ACT: ENTER PASSWORD** is displayed, then press the [ENT] key.

   For DGP units with GE Modem protocol: If this is the first time the Control Level functions are used, the password has the factory value "**5678.**". The decimal point, ".", is part of the password that can only be entered at the factory. This password must be changed before any Control functions can be accessed. See Section 8.3.9: ACTIONS KEY [ACT] on page 8–7 for information on how to change the password.

   For DGP units with Modbus protocol: Password access is not required.

3. Enter the current Control Level password. If the password is not known, see Chapter 8: INTERFACE for information on how it can be viewed.

   When the correct password is entered, the message **SELECTED** will be displayed.

4. Press the [ACT] key. Scroll with the arrow key until **ACT: RELAY TEST** is displayed, then press [ENT].
5. Scroll through the different test mode functions or enter the number of the desired test, such as "5" for the 40-1 then press [ENT]. Pressing [ENT] again causes the MMI to display **40-1 ON** and the MMI LED to turn red, indicating that the relay is in the test mode. When the relay picks up or trips for the selected function it will close the DOR12 or DOR13 contacts, respectively.

4.3.4 EXITING THE TEST MODE

While in the test mode, press the [ACT] key. Scroll with the arrow key until the **ACT: RELAY TEST** item is displayed, then press the [ENT] key. Scroll until the display shows **END TEST MODE**, or press "1" then [ENT]. Press the [ENT] key again. The MMI LED should turn green, indicating that normal operation has resumed.

4.4.1 DESCRIPTION

Testing the relay without using the keypad is accomplished via a PC running the DGP-PC program. DGP-PC is required to establish communications, change the password, change settings for the tests, and place the unit into test mode.

The following section is intended to give a step-by-step procedure to test the relay, from setting up communications to the application of the voltages and current inputs. It will be necessary to be familiar with the DGP-PC software. Refer to Chapter 10: DGP-PC SOFTWARE for detailed information on using DGP-PC.

4.4.2 HARDWARE SETUP

The cable used to connected the DGP to a PC depends on the DGP and PC port settings. The DGP PL-1 port accepts a 25-pin male D-connector; the COMM port accepts a 9-pin male D-connector. The PC may require a 9 or 25-pin connector depending on its configuration. Null-modem cable wiring is shown in Figure 9–1: DGP COMMUNICATIONS WIRING on page 9–3 for connecting the DGP system with a 9-pin to 25-pin and a 25-pin to 25-pin setup.

4.4.3 SOFTWARE SETUP

The software setup requires loading the software on to the PC, starting the program, and configuring the program to match the port settings and baud rate of the system.

a) LOAD & START DGP-LINK

1. Insert the CD containing the compressed DGP-PC file or download it onto your computer. Double click on DGP-PC icon and follow the instructions to load the required components.
2. Start the program by double-clicking the DGP-PC icon or through the Windows Start Menu.

b) SET UP A NEW TEST UNIT

1. Set DGP-PC to access the NewSite page. The default is always NewSite. To change this default name, enter the new name is the **Site Name** box (for example, TestSite) and click the **Save** button.
2. Select **File > Add new IED**. Select appropriate IED type from the **IED Type** scroll list (see Figure 4–1: ADDING A NEW IED below). The correct IED type can be obtained by viewing the DGP model with the MMI.
3. The **IED Description** can be changed to TEST UNIT, for example, once created.
4. Enter the **Unit ID** and select the appropriate **COM Port** and **Baud Rate**. For DGP models with the GE Modem protocol, type decoded remote passwords into the **Passwords** box. If the current passwords are not known, refer to Chapter 8: INTERFACE for information on how to display them. Click **Save** when done.
5. NOTE: Baud rate, parity and stop bits are set to default. See following section for details.

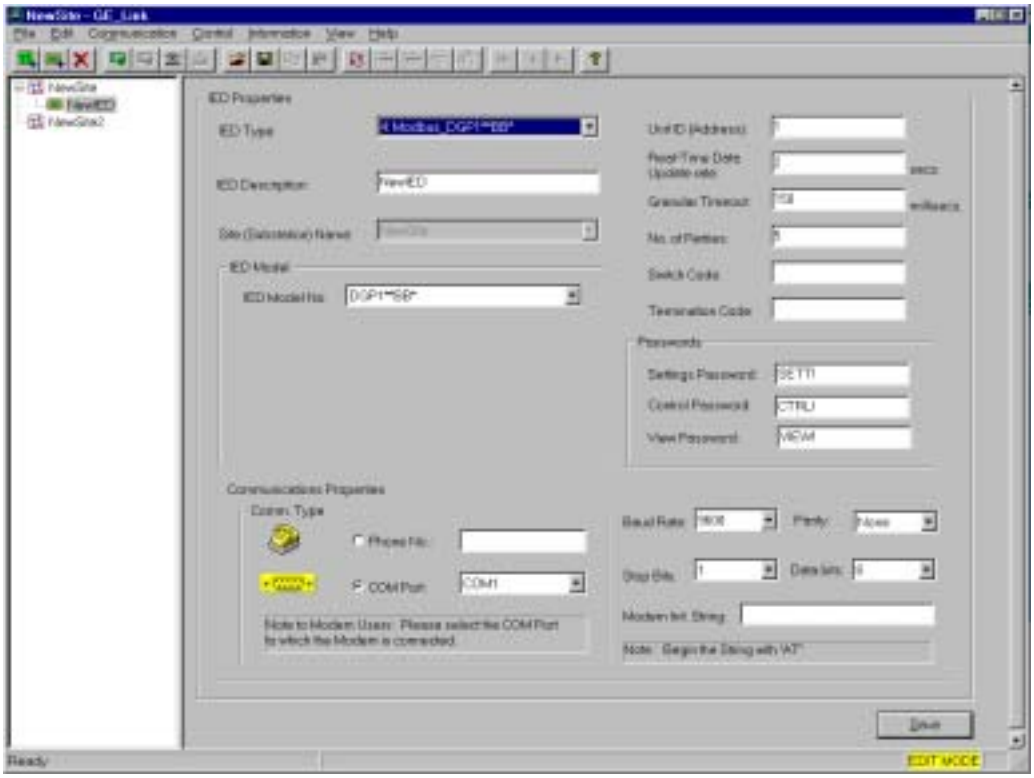

Figure 4–1: ADDING A NEW IED

4.4.4 RELAY SETUP

Before shipment, the relay is set with factory default settings. These include the Unit ID, the Baud Rate, and the Factory Passwords. The default communications parameters are:

Table 4–1: DEFAULT COMMUNICATION PARAMETERS

SETTING	FACTORY DEFAULT
UNIT ID	0 (GE Modem) / 1 (Modbus)
VIEW PASSWORD	VIEW!
CONTROL PASSWORD	CTRL!
SETTINGS PASSWORD	SETT!
BAUD RATE	2400

4.4.5 LOGGING INTO THE RELAY

1. To log on to the Test unit, click on the test unit IED to highlight it. Select the **Communication > Connect Relay** menu item and click on **Connect**.
2. When prompted by DGP-PC, enter the password for the appropriate access levels (GE Modem protocol only).

3. The passwords are listed in the table above and *must be changed* before any of the relay functions except CHANGE PASSWORD and LOGOUT will operate.
4. If communication is successful, the the status bar at the bottom of the screen will indicate that the DGP is connected along with other status information
5. If this was an initial login with the factory default passwords, the user must change the password (applies to GE Modem protocol units only).

4.4.6 SETTING CHANGES

1. Any Setting changes required for a particular test are listed at the beginning of the test. Settings can be changed individually through the IED Settings folder shown below.

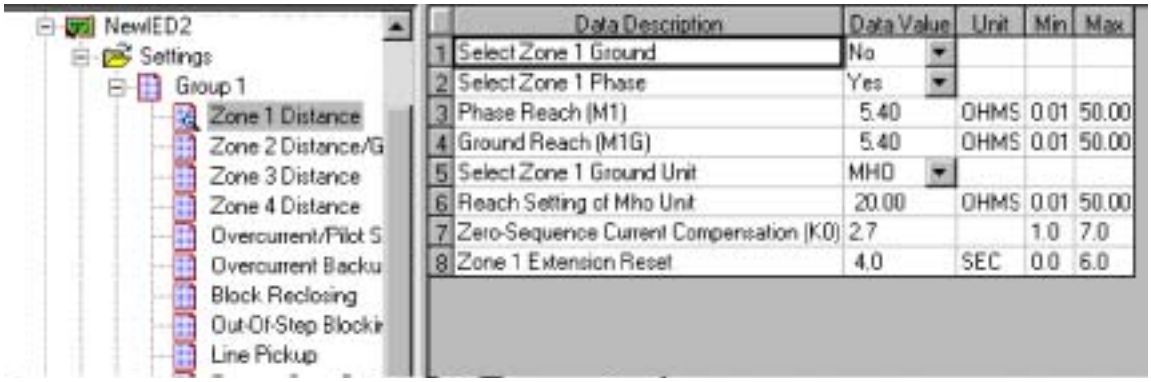

Figure 4–2: DGP-PC SETTINGS MENU

2. Additional detail on changing Settings with DGP-PC is provided in Chapter 10: DGP-PC SOFTWARE.
3. Once a setting has been modified, select the **Control > Send Settings to Relay** menu item.

4.4.7 ENTERING THE TEST MODE

Before most tests it is necessary to set the relay in the test mode. Test mode is set as follows:

1. Log into the relay using Control access level password.
2. When the password is accepted, **CTRL MODE** will appear at the bottom right of the screen.
3. Select **Relay test** from the IED **Operations** folder.
4. The **Test Mode** list box appears.
5. Select the test you wish to enter from the menu and then click **BEGIN TEST**.
6. The MMI LED will change from green to red when the DGP system is in the test mode.

   NOTE: No access password is required for relays with the Modbus protocol.

4.4.8 EXITING THE TEST MODE

The test mode is ended (and the relay protection turned on) by selecting END TEST mode from the **Test Mode** list. The MMI LED changes from red to green.

4.5.1 DESCRIPTION

Before beginning the test, the relay settings should be recorded for reference and verification. The factory defaults are listed in Table 2–1: DGP SYSTEM SETTINGS & RATINGS on page 2–3. Scroll through each setting to ensure they match the default settings listed.

If testing with DGP-PC, the relay settings should be uploaded from the DGP and printed for reference and verification. Verify that each DGP setting matches the default setting listed. If no printer is available, verify individual settings through the **Settings** folder.

Once uploaded, the current settings can be saved to a disk file and be reloaded back into the DGP when testing is completed. Select the current IED and use the **File > Save Settings to File** menu item to save the DGP settings to a file. DGP-PC will prompt for a file name. More information on using this command can be found in Chapter 10: DGP-PC SOFTWARE.

4.6.1 NOTE

NOTE

SETTINGS MADE VIA MMI: All Settings or Control changes must have their respective passwords entered before any changes can be made. After all of the settings changes have been entered, the [END] [ENT] key-sequence must be entered so that the relay can accept and operate with the new settings.

4.6.2 T1: MMI STATUS AND DISPLAY TESTING

The Relay Status is reported through the MMI, the non-critical alarm contact, and the critical alarm contact. If a system error caused relaying functions to cease, the LED on the MMI would turn red, a **FAIL** message would be displayed, and the critical alarm relay would de-energize. A failure that did not interrupt relaying would be indicated by energizing the non-critical alarm relay and a **WARN** message.

a) STATUS CHECK

This test will demonstrate the use of the MMI to check relay status. See Chapter 6: SERVICING for more information.

1. The AC inputs are not required for this test, only the DC power supply voltage. Apply rated DC power and wait for initialization to complete as indicated by the green LED.
2. Enter the Setting Level password. Press the [SET] key followed by "103" to change the setting for the trip circuit monitor.
3. Set 103: **SEL TVM** = 0000.

   NOTE

   Press [END] and [ENT] keys after each setting change.
4. Press the [INF] key. Scroll with the arrow keys until the **INF: STATUS** heading is displayed.
5. Press the [ENT] key.

   The display should read **STATUS OK**. "OK" indicates that the relay is operational and there are no errors.

b) WARNING STATUS

1. Enter the Setting Level password. Press the [SET] key followed by "103" to change the setting for the trip circuit monitor.
2. Set 103: **SEL TVM** = 1111. When completed, the relay expects wetting voltage across the trip contacts. Press the [END] and then [ENT] keys.
3. Press the [INF] key. Scroll with the arrow keys until the **INF: STATUS** heading is displayed.
4. Press the [ENT] key.

   The display should read **STATUS: WARN**.
5. Scroll with the arrow keys until the **94G TRP CIR OPN** heading is displayed. Continue scrolling through the remaining trip circuit outputs (94G1, 94G2, and 94G3). This verifies that the relay detected the absence of wetting voltage across the trip contacts.
6. Enter the Setting Level password. Press the [SET] key followed by "103" to change the setting for the trip circuit monitor.
7. Enter Setting 103: **SEL TVM** = 0000. Press the [END] and then [ENT] keys.

c) DISPLAY TEST

The MMI test is built into the software. It allows the user to test the keypad, printer, and display. If no printer is connected to the relay, skip the printer port testing.

1. Apply rated DC power and wait for initialization to complete as indicated by the green LED.
2. Press the [ACT] key. Scroll with the arrow keys until the **ACT: MMI TEST** heading is displayed.
3. Press the [ENT] key.

   The display should read **NEXT?**.
4. Press [1/Y] followed by the [ENT] key.

   The display will change to **LED TST?**.
5. Press [1/Y] followed by the [ENT] key.

   If the green LED is on, it will change to red. If the red LED is on, it will change to green. The target LEDs will flash on and off four times and then each target LED will be lit individually. When the test is over, the target LEDs will return to their original state.
6. Next, the display will prompt for the keyboard test with **KEYBRD TST?**.
7. Press [1/Y] followed by the [ENT] key.
8. At this point the MMI is in the keyboard test. Press every key on the keypad except for [CLR] key. As each key is pressed, verify that the display indicates the correct key was pressed.
9. When all the keys have been checked, press the [CLR] key.
10. The display will prompt **PRINTER TST?**. if you do not have a printer or the printer port is not active, then press the [3/N] followed by the [ENT] key. Otherwise, press [1/Y] followed by the [ENT] key.

4.6.3 T2: DIGITAL OUTPUT TESTS

This test checks all relay outputs. It is a convenient way to determine proper system connections and verify the operation of all relay contacts without having to apply currents and voltages to simulate faults.

NOTE

If DGP-PC is used to perform this test, none of the outputs will operate unless Jumper J1 on the MMI module is removed. Refer to Figure 3–4: DGP MMI MODULE on page 3–5.

1. Connect the relay as shown in Figure 4–3: DIGITAL OUTPUT TEST CONNECTIONS.
2. Enter the Control Level password.
3. Press the [ACT] key and then select **DIG OUT TEST**. Press the [ENT] key.
4. Select the output to test by using the arrow keys to scroll to the desired output, such as 94G, and press the [ENT] key.

   NOTE

   After all tests are done you must end this test mode using step 6.

   Before the contact is allowed to close you will be prompted to turn protection off during the test. The prompt is: **DISABLE PROT?**. Press the [1/Y] key followed by the [ENT] key to turn protection off. Protection will remain off until the test mode is ended.

   Once the protection choice is chosen, the selected relay output will close.

   Using an ohmmeter or other suitable device, verify that the output under test has closed.
5. After the output is tested, scroll to the next output to test and press the [ENT] key. This output will close and the previously selected output will open. Continue in this fashion until all outputs are tested.
6. End the test mode by scrolling to the **END TEST MODE** item and press the [ENT] key. Alternatively, the [END] [ENT] key sequence can be entered to end the test and re-enable protection.

DIGITAL OUTPUTS	X	Y
94G	BE10	BF10
94G1	BE9	BF9
94G2	BE8	BF8
94G3	BE7	BF7
74A	AF14	AG14
74B	AF13	AG13
74C	AF12	AG12
74D	AF11	AG11
74CR	AF7	AG7
74NC	AF8	AG8
74FF	AF10	AG10
TEST PICKUP	AF6	AG6
TEST TRIP	AF5	AG5

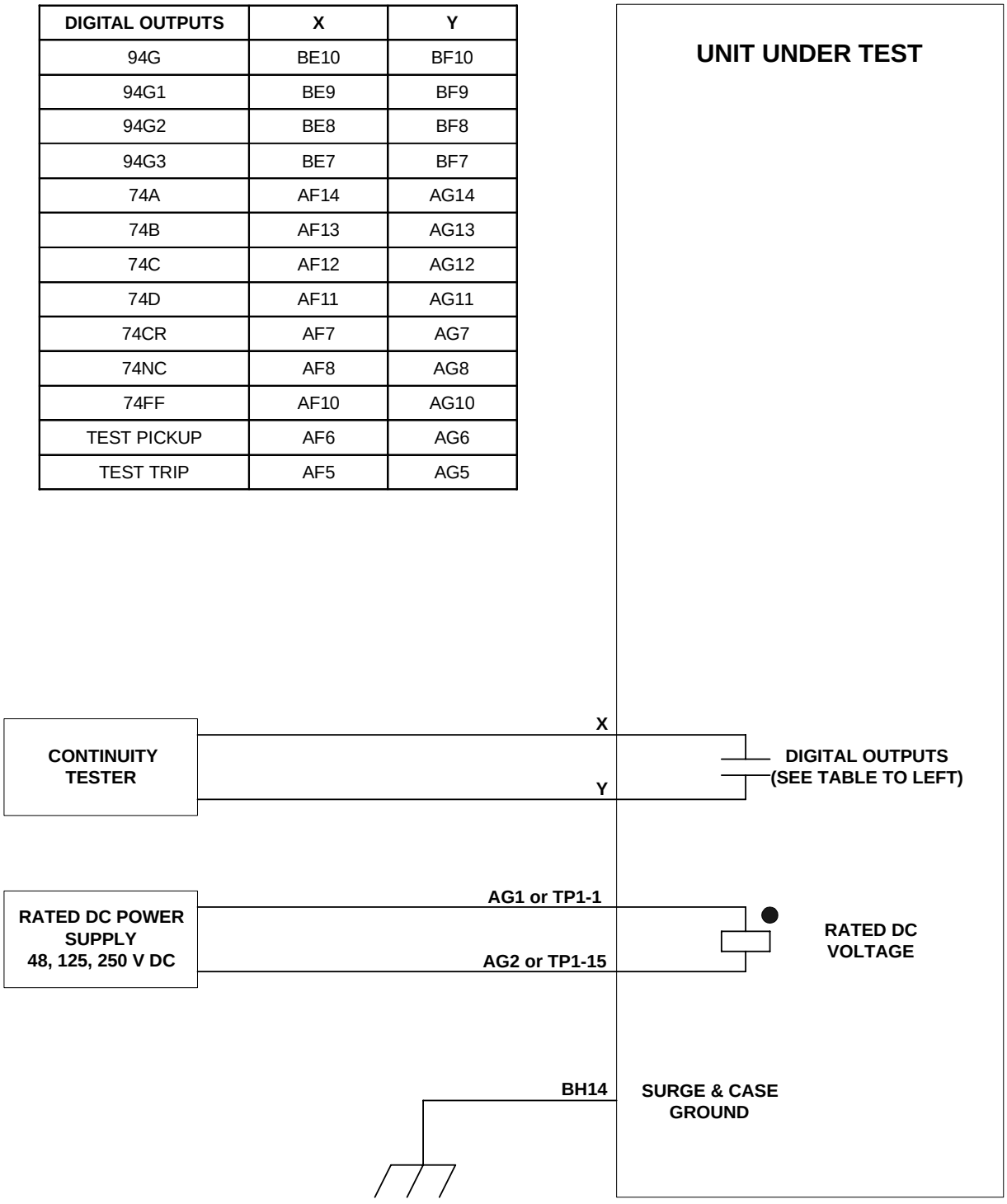

Figure 4–3: DIGITAL OUTPUT TEST CONNECTIONS

4.6.4 T3: DIGITAL INPUT TESTS

This test checks all digital inputs of the relay. It is a convenient way to determine proper system connections and verify the operation of all dual optically isolated digital inputs. All digital inputs should be between 35 and 300 V DC.

Protection can be enabled or disabled, as deemed necessary by the user.

1. Connect the relay as shown in Figure 4–4: DIGITAL INPUT TEST CONNECTIONS.
2. Apply DC across DI1 (BG8—BG7). Using the MMI and the INFORMATION–VALUES command, verify that **GEN = OFF-LINE**.
3. Remove DC from DI1 (BG8—BG7). Using the MMI and the INFORMATION–VALUES command, verify that **GEN = ON-LINE**.
4. Apply DC across DI2 (BG6—BG5). Using the MMI and the INFORMATION–VALUES command, verify that I**NLET VLV=CLOSED**.
5. Remove DC from DI2 (BG6—BG5). Using the MMI and the INFORMATION–VALUES command, verify that **INLET VLV=OPEN**.
6. Apply DC across DI3 (BG4—BG3). Using the MMI and the INFORMATION–VALUES command, verify that **DIG IN 3 = CLOSE**.
7. Remove DC from DI3 (BG4—BG3). Using the MMI and the INFORMATION–VALUES command, verify that **DIG IN 3 = OPEN**.
8. Apply DC across DI4 (BG2—BG1). Using the MMI and the INFORMATION–VALUES command, verify that **DIG IN 4 = CLOSE**.
9. Remove DC from DI4 (BG2—BG1). Using the MMI and the INFORMATION–VALUES command, verify that **DIG IN 4 = OPEN**.
10. Apply DC across DI5 (BE4—BE3). Using the MMI and the INFORMATION–VALUES command, verify that **OSC TRIG = CLOSE**.

    NOTE: This input is not active on some models of DGP.
11. Remove DC from DI5 (BE4—BE3). Using the MMI and the INFORMATION–VALUES command, verify that **OSC TRIG = OPEN**.

    NOTE: This input is not active on some models of DGP.
12. Apply DC across DI6 (BE2—BE1). Using the MMI and the INFORMATION–VALUES command, verify that **DIG IN 6 (EXT VTFF) = CLOSE**.
13. Remove DC from DI6 (BE2—BE1). Using the MMI and the INFORMATION–VALUES command, verify that **DIG IN 6 (EXT VTFF) = OPEN**.

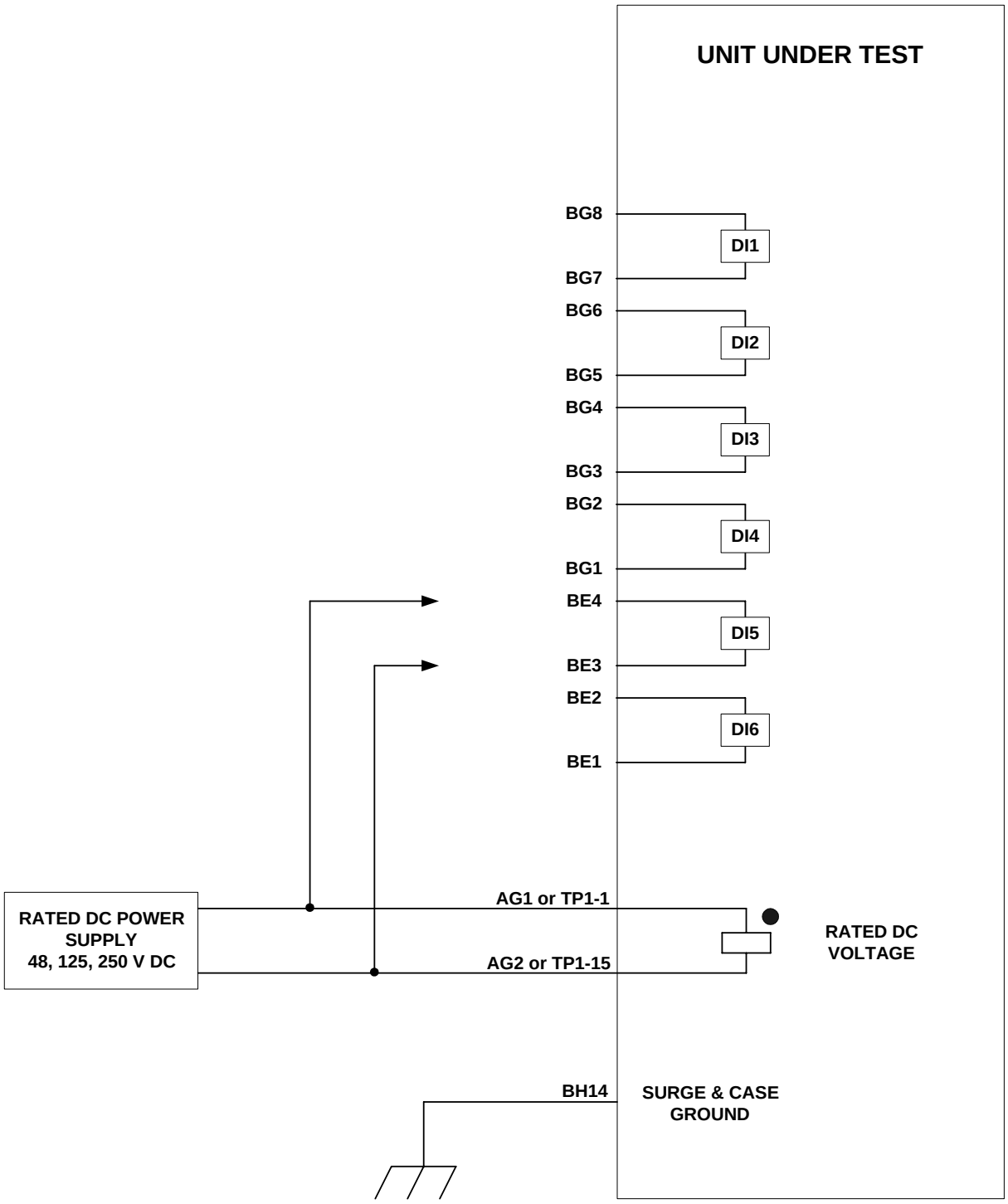

Figure 4–4: DIGITAL INPUT TEST CONNECTIONS

4.6.5 T4: AC SYSTEM INPUT TEST

This test uses the INFORMATION–VALUES function of the MMI to determine that the voltages and currents are applied to the proper connections on the terminal strip. The INFORMATION–VALUES function can be used at any time during the test to verify that the relay has the correct voltages and currents applied.

1. Connect the relay as shown in Figure 4–5: AC SYSTEM INPUT TEST CONNECTIONS.
2. Using a 60 Hz source, set the current inputs to:

   IA = 0.5 (0.1) A rms ∠0°
   IB = 2.0 (0.4) A rms ∠–120°
   IC = 15.0 (3.0) A rms ∠–240°

   and set the voltage inputs to:

   VA = 20 V rms ∠0°
   VB = 70 V rms ∠–120°
   VC = 120 V rms ∠–240°
3. Press the [INF] key. Scroll with arrow keys to the **INF: VALUES** heading, then press the [ENT] key. The present values are now selected.
4. With the arrow keys, scroll through the values of:

   IAS, ANGLE IAS

   IBS, ANGLE IBS

   ICS, ANGLE ICS

   IAR, ANGLE IAR

   IBR, ANGLE IBR

   ICR, ANGLE ICR

   VAN, ANGLE VAN

   VBN, ANGLE VBN

   VCN, ANGLE VCN

   GEN FREQ

   Check that all frequency measurements are within 0.01 Hz and all voltage and current measurements are within 3% of their set amplitude and 1° of their set phase.

   NOTE

   Other quantities are listed between the values of ANGLE VCN and GEN FREQ. These will be tested in another section.

   If a printer is available, press the [PRT] key while in the **INF: VALUES** category and all present values will be printed. Alternately, whenever the MMI display is blank, pressing the [CLR] key will automatically scroll through all of the present values.
5. Repeat steps 2 through 4 using the following source frequencies: 30.5 and 79.5 Hz.

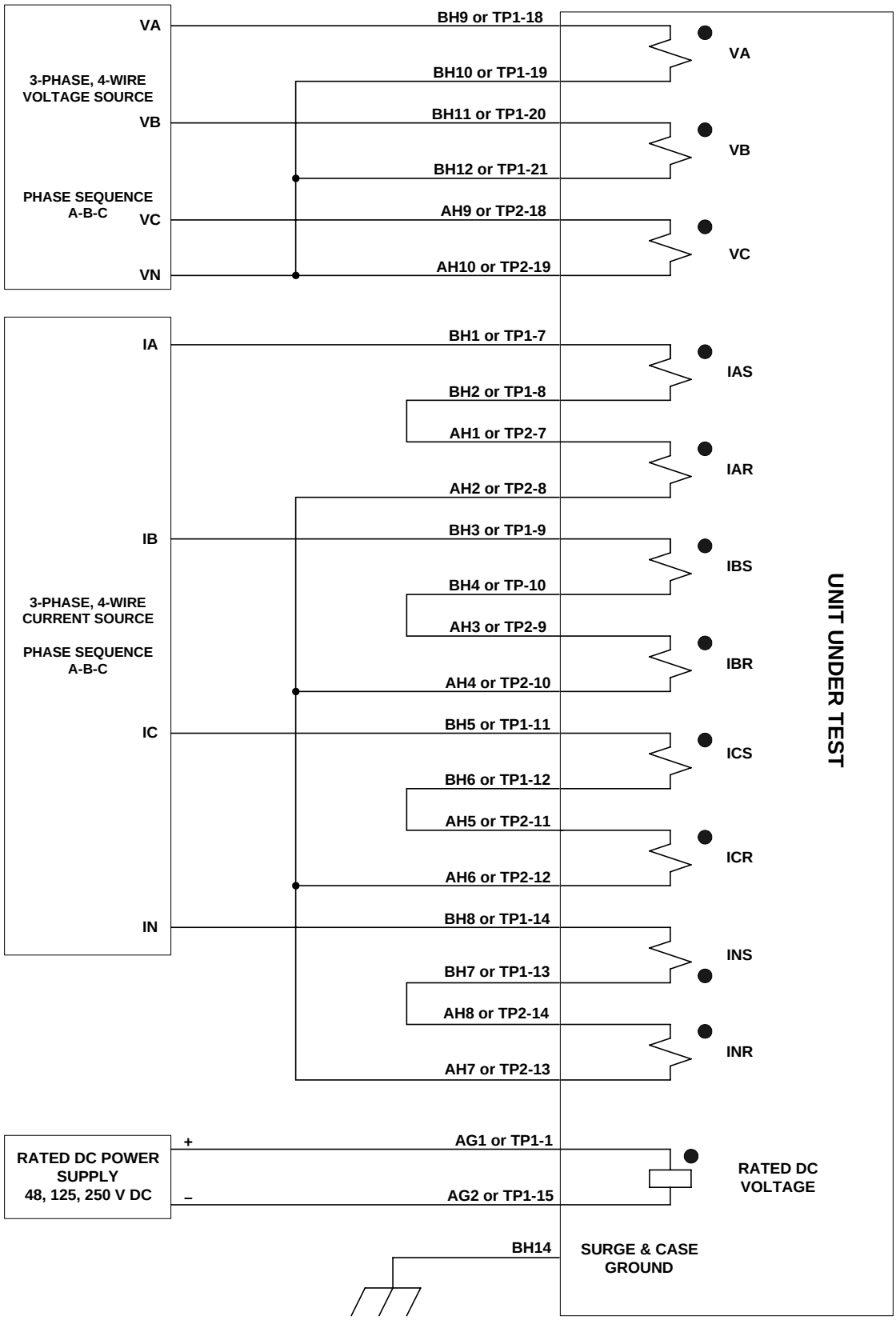

Figure 4–5: AC SYSTEM INPUT TEST CONNECTIONS

4.7.1 DESCRIPTION

NOTE

All Settings or Control Level changes must have their respective passwords entered before any changes can be made. After all of the settings changes have been entered, the [END] [ENT] key sequence must be entered so the relay can accept and operate with the new settings.

Before starting the Protection Functions test, input the following settings into the Configuration category.

Settings:

CONFIG

(102) **SYSFREQ** = 60
(103) **SEL TVM** = 0000
(104) **SEL TCM** = 0000
(105) **SELPRIM** = SECNDRY (1)
(106) **CT RATIO** = 1
(107) **VT RATIO** = 1.0
(109) **PHASE** = A-B-C
(114) **NOM VOLT** = 120.0
(115) **RATEDCUR** = 5.00 (1.00)

Protection Function testing is accomplished with two methods:

1. In protection mode, all outputs are directed to the selected Trip/Alarm output contacts.
2. In test mode, all outputs are directed to the test-output contacts (DOR12—test pickup, DOR13—test trip), along with the selected Trip/Alarm contacts. Test pickup has a normally open (AF6—AG6) and a normally closed (AF6—AE6) contact. Test trip also has a normally open (AF5—AG5) and a normally closed (AF5—AE5) contact.

   To enter test mode, first input the Control Level password. Press the [ACT] key, then scroll until the heading **ACT: RELAY TEST** is displayed. Press the [ENT] key. Scroll through the different functions until you reach the function to be tested. Press the [ENT] key. The status light will turn red and the MMI will display **ON** next to the function to be tested.

NOTE

1.Although the status light is red, the protection functions are still ON while the relay is in test mode.

2.Where appropriate, current levels are defined with two numbers as *xx*(*yy*); *xx* is the value to be used for relays rated at 5 amperes and (*yy*) is the value to be used for 1 ampere relays.

4.7.2 T5: GENERATOR DIFFERENTIAL TEST 87G

1. Settings:

   87G

   (203) **K1** = 5
   (204) **PICKUP** = 0.3 (0.06) A

2. Connect the relay as shown in Figure 4–6: GENERATOR DIFFERENTIAL TEST CONNECTIONS.
3. Set up relay in test mode for the 87G function; **87G ON** will be displayed on the MMI.
4. Set the current of IAR to 5 A (1 A) rms and IAS to 5 A (1 A) rms in phase. The test pickup and test trip contacts should not operate. Increase IAS to 7 A (1.3 A) rms and test pickup and test trip should operate.
5. Set IAS to 5 A (1 A) rms and test pickup and test trip should not operate.

6. Decrease IAS to 3 A (0.75 A) rms and test pickup and test trip should operate.
7. Repeat the above test for phases B (IBR, IBS) and C (ICR, ICS).

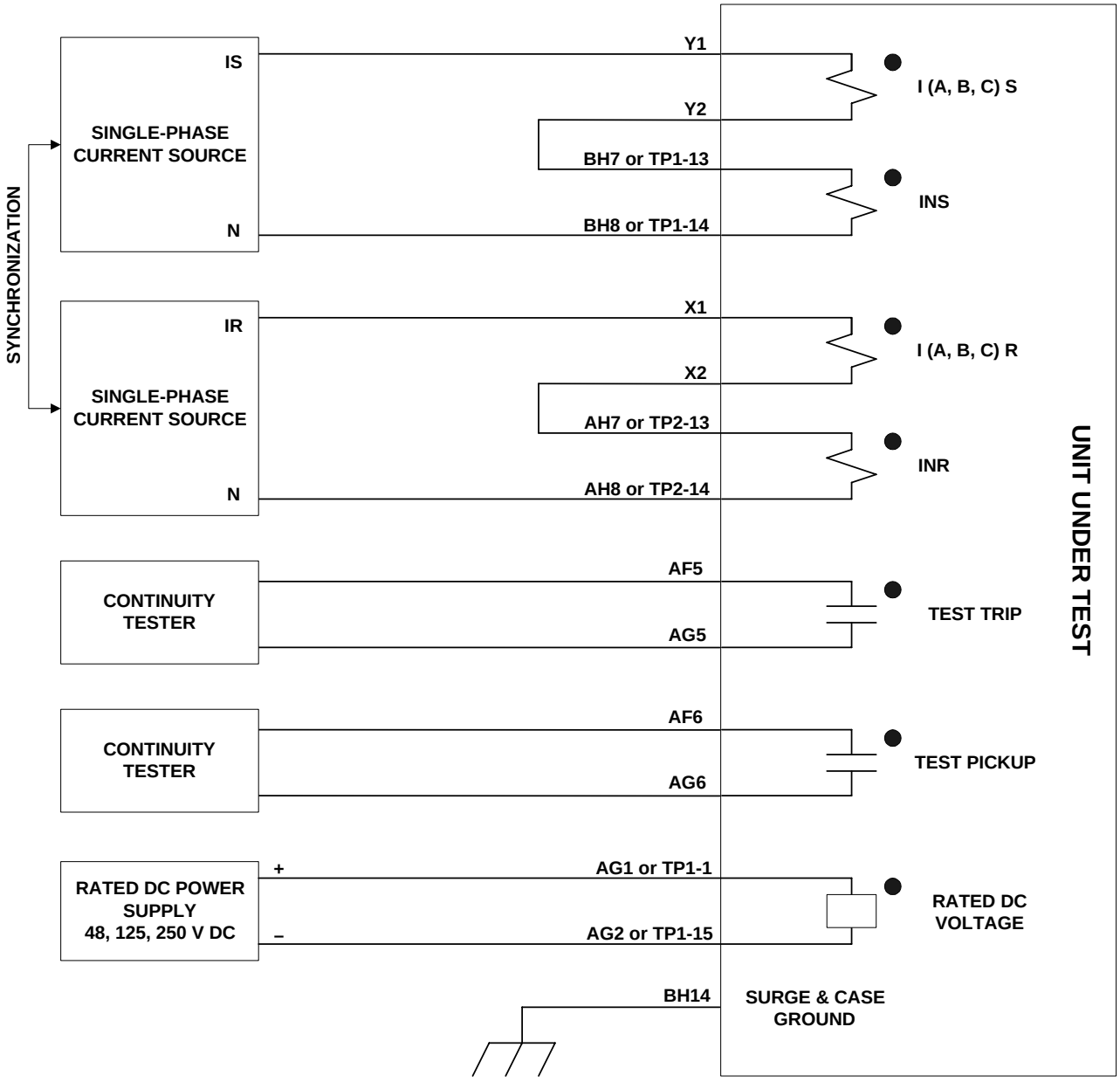

PHASE UNDER TEST	INPUT X1		INPUT X2		INPUT Y1		INPUT Y2	
	TERMINAL BLOCK NUMBER	XTM TERMINAL NUMBER	TERMINAL BLOCK NUMBER	XTM TERMINAL NUMBER	TERMINAL BLOCK NUMBER	XTM TERMINAL NUMBER	TERMINAL BLOCK NUMBER	XTM TERMINAL NUMBER
A	AH1	TP2-7	AH2	TP2-8	BH1	TP1-7	BH2	TP1-8
B	AH3	TP2-9	AH4	TP2-10	BH3	TP1-9	BH4	TP1-10
C	AH5	TP2-11	AH6	TP2-12	BH5	TP1-11	BH6	TP1-12

Figure 4–6: GENERATOR DIFFERENTIAL TEST CONNECTIONS

4.7.3 T6: CURRENT UNBALANCE ALARM 46A

1. Settings:

   46A

   (302) **PICKUP** = 0.05 (0.01)
   (303) **TL14** = 1

2. Connect the relay as shown in Figure 4–7: CURRENT UNBALANCE TEST CONNECTIONS.
3. Set up relay in test mode for the 46A function; **46A ON** will be displayed on the MMI.
4. Set the current inputs to:

   IAS = 0.4 (0.08) A rms ∠0°
   IBS = 0.4 (0.08) A rms ∠–120°
   ICS = 0.4 (0.08) A rms ∠–240°

   Test pickup and test trip should not operate.

5. Change the current inputs to:

   IAS = 0.25 (0.05) A rms ∠0°
   IBS = 0.0 A rms ∠–120°
   ICS = 0.0 A rms ∠–240°

   The test pickup should operate immediately and test trip should operate in 1.00 to 1.03 seconds.

4.7.4 T7: CURRENT UNBALANCE TRIP 46T

1. Settings:

   46T

   (403) **PICKUP** = 2.0 (0.4)
   (404) **K2** = 1.0

2. Connect the relay as shown in Figure 4–7: CURRENT UNBALANCE TEST CONNECTIONS.
3. Set up relay in test mode for the 46T function; **46T ON** will be displayed on the MMI.
4. Set the current inputs to:

   IAS = 2.0 (0.4) A rms ∠0°
   IBS = 2.0 (0.4) A rms ∠–120°
   ICS = 2.0 (0.4) A rms ∠–240°.

   The test pickup and test trip contacts should not operate.

5. Change the current inputs to:

   IAS = 6.3 (1.26) A rms ∠0°, IBS = 0.0 A rms ∠–120°, and ICS = 0.0 A rms ∠–240°.

   The test pickup should operate immediately and test trip should operate in 5.5 to 5.7 seconds.



NOTE

If this test is repeated, the operate time of the trip contact will change according to how soon the test is repeated. The trip time can be calculated with to the following equation:

$$\text{New Trip Time} = \frac{T}{230} \times \text{Original Trip Time}$$

where T = the time between successive tests and Original Trip Time = the 5.5 to 5.7 seconds it originally took to trip the relay. If the time between successive trips is greater than 230 seconds, the relay will trip in the original trip time.

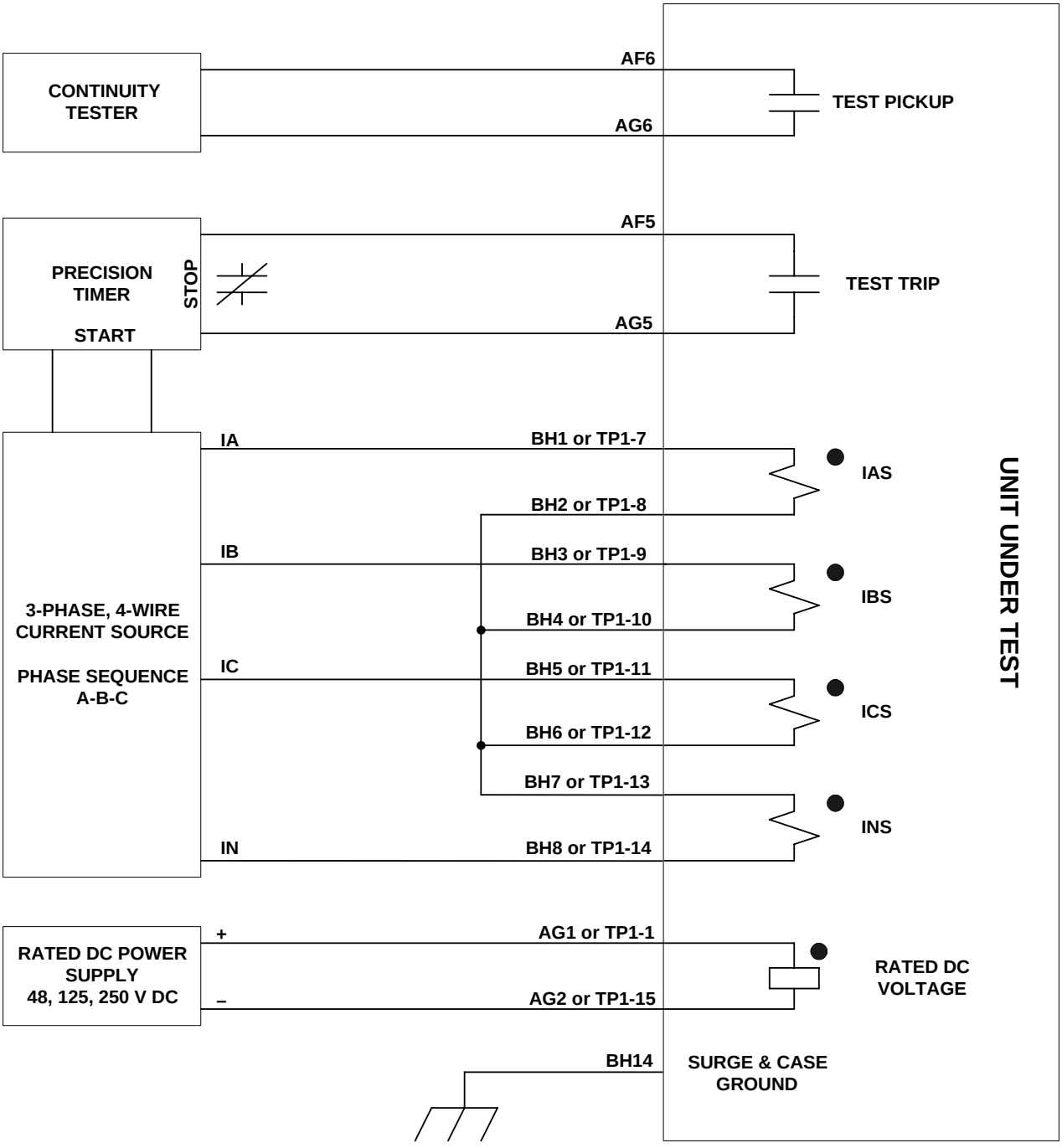

Figure 4–7: CURRENT UNBALANCE TEST CONNECTIONS

1. Make the following Settings changes:

   40

   (501) **SELV2SUP** = DISABLE (0)

   40-1

   (603) **CENTER** = 11 (55)
   (604) **RADIUS** = 8.5 (42.5)
   (605) **TL12** = 0.06

2. Connect relay as shown in Figure 4–8: STANDARD FUNCTIONAL TEST CONNECTIONS on page 4–25.
3. Set up relay in test mode for the 40-1 function; **40-1 ON** will be displayed on the MMI. Using the MMI and the INFORMATION–VALUES command, verify that **DIG IN 6 (EXT VTFF) = OPEN**.
4. Using a 60 Hz source set the voltage inputs to:

   VA = 35 V rms ∠0°,
   VB = 35 V rms ∠–120°,
   VC = 35 V rms ∠–240°.

   Set the current inputs according to the Table below.

Table 4–2: CURRENT INPUTS FOR TESTS T8 & T9

TEST	PHASE A		PHASE B		PHASE C	
	MAG.	PHASE	MAG.	PHASE	MAG.	PHASE
A	14.5 (2.9) A	90°	14.5 (2.9) A	–30°	14.5 (2.9) A	–150°
B	12.5 (2.5) A	90°	12.5 (2.5) A	–30°	12.5 (2.5) A	–150°
C	1.7 (0.34) A	90°	1.7 (0.34) A	–30°	1.7 (0.34)A	–150°
D	1.9 (0.38) A	90°	1.9 (0.38) A	–30°	1.9 (0.38) A	–150°

5. The following results should be obtained:

   Tests A & C: Test pickup and test trip do not operate.
   Tests B & D: Test pickup operates immediately and test trip operates in 65 to 85 ms.

6. Apply DC voltage across DI6 (BE2—BE1). Using the MMI and the INFORMATION–VALUES command, verify that **DIG IN 6 (EXT VTFF) = CLOSE**.
7. Repeat Test D from the above table and verify that the test pickup and test trip do not operate.
8. Remove DC from DI6 (BE2—BE1). Using the MMI and the INFORMATION–VALUES command, verify that **DIG IN 6 (EXT VTFF) = OPEN**.
9. Change the following setting:

   (501) **SELV2SUP** = ENABLE (1)

10. Set VA = 50 V rms ∠0°, IA = 2.7 (0.54) A rms ∠90°, and all other AC sources to 0 V. Verify that the test pickup and test trip do not operate.

4.7.6 T9: LOSS OF FIELD PROTECTION ZONE 2, 40-2

1. Settings:

   40-2

   (703) **CENTER** = 11 (55)
   (704) **RADIUS** = 8.5 (42.5)
   (705) **TL13** = 2

2. Connect relay as shown in Figure 4–8: STANDARD FUNCTIONAL TEST CONNECTIONS on page 4–25.
3. Set up relay in test mode for the 40-2 function; **40-2 ON** will be displayed on the MMI.
4. Using a 60 Hz source, set the voltage inputs to: VA = 35 V rms ∠0°, VB = 35 V rms ∠–120°, and VC = 35 V rms ∠–240°. Set the current inputs according to Table 4–2: CURRENT INPUTS FOR TESTS T8 & T9 on page 4–21.
5. The following results should be obtained:

   Tests A & C: Test pickup and test trip do not operate.
   Tests B & D: Test pickup operates immediately and test trip operates in 2.0 to 2.1 seconds.

4.7.7 T10: ANTI-MOTORING & SEQUENTIAL TRIP SUPERVISION 32-1

1. Settings:

   32-1

   (803) **SQ TR EN** = YES [1/Y]
   (804) **REV PWR** = 1.5 (0.3)
   (805) **TL1** = 5

   DIG INP

   (2501) **SELBKDI1** = NO BLK (0)

2. Connect relay as shown in Figure 4–8: STANDARD FUNCTIONAL TEST CONNECTIONS on page 4–25.
3. Set up relay in test mode for the 32-1 function; **32-1 ON** will be displayed on the MMI.
4. Using a 60 Hz source set the voltage inputs to: VA = 20 V rms ∠0°, VB = 20 V rms ∠–120°, and VC = 20 V rms ∠–240°. Set the current input to IA = 0.1 (0.02) A rms ∠180°. Phases B and C should have no current. Verify that test pickup operates and test trip do not operate.
5. Reduce IA to 0 A.
6. Apply DC across DI2 (BG6—BG5). Using the MMI and the INFORMATION–VALUES command, verify that **INLET VLV = CLOSED**.
7. Set the current input to IA = 0.1 (0.02) A rms ∠180° and verify that the test pickup operates immediately and the test trip operates in 5.0 to 5.05 seconds.
8. Reduce IA to 0 A and remove DC from DI2 (BG6—BG5). Using the MMI and the INFORMATION–VALUES command, verify that **INLET VLV = OPEN**. Check that the test trip contact has dropped out.
9. Change the following setting:

   (803) **SQ TR EN** = NO [3/N]

10. Repeat steps 7 to 8.

4.7.8 T11: ANTI-MOTORING 32-2

Skip this test if your DGP model does not include this function. This function is not available on DGP*ABA model relays.**

NOTE

1. Settings:

   32-2

   (903) **REV PWR** = 1.5 (0.3)
   (904) **TL2** = 1

   DIG INP

   (2501) **SELBKDI1** = NO BLK (0)

2. Connect relay as shown in Figure 4–8: STANDARD FUNCTIONAL TEST CONNECTIONS on page 4–25.
3. Set up relay in test mode for the 32-2 function; **32-2 ON** will be displayed on the MMI.
4. Using a 60 Hz source set the voltage inputs to:

   VA = 20 V rms ∠0°,
   VB = 20V rms ∠–120°,
   VC = 20V rms ∠–240°.

5. Set the current input to IA = 0.1 (0.02) A rms ∠180°. Phases B and C should have no current.
6. Verify that test pickup operates immediately and test trip operates in 1.00 to 1.05 seconds.

4.7.9 T12: TIME OVERCURRENT WITH VOLTAGE RESTRAINT 51V

1. Settings:

   51V

   (1003) **PICKUP** = 0.5 (0.1)
   (1004) **TIME FAC** = 1.0

2. Connect relay as shown in Figure 4–8: STANDARD FUNCTIONAL TEST CONNECTIONS on page 4–25.
3. Set up relay in test mode for the 51V function; **51V ON** will be displayed on the MMI.
4. Using a 60 Hz source set the voltage inputs to:

   VA = 70V rms ∠0°
   VB = 70V rms ∠–120°
   VC = 70V rms ∠–240°.

   Set the current inputs according to the table below.

Table 4–3: CURRENT INPUTS FOR TEST T12

TEST	PHASE A		PHASE B		PHASE C	
	MAG.	PHASE	MAG.	PHASE	MAG.	PHASE
A	0.45 (0.09) A	0°	0.45 (0.09) A	–120°	0.45 (0.09) A	–240°
B	2.0 (0.4) A	0°	2.0 (0.4) A	–120°	2.0 (0.4) A	–240°

5. The following results should be obtained:

   Test A: Test pickup and test trip do not operate.
   Test B: Test pickup operates immediately and test trip operates in 1.00 to 1.04 sec.

6. Apply DC voltage across DI6 (BE2—BE1). Using the MMI and the INFORMATION–VALUES command, verify that **DIG IN 6 (EXT VTFF) = CLOSE**.

7. Repeat test B from the table above. Verify that the test pickup operates but the test trip does not operate.

8. Remove DC from DI6 and all phase currents. Re-apply each phase current separately and verify that both test contacts operate for each phase, as in step 5.

4.7.10 T13: ACCIDENTAL ENERGIZATION AE

1. Make the following settings:

   AE

   (2703) **AE ARM** = AND (0)

   51V

   (1002) **ALARM** = 1000 (enable 51V function)

2. Connect relay as shown in Figure 4–8: STANDARD FUNCTIONAL TEST CONNECTIONS on page 4–25.

3. Set up relay in test mode for the AE function; **AE ON** will be displayed.

4. Using a 60 Hz source set the voltage inputs to:

   VA = 29 V rms ∠0°
   VB = 29 V rms ∠–120°
   VC = 29 V rms ∠–240°.

   Set the current inputs according to the table below:

   Table 4–4: CURRENT INPUTS FOR TEST T13

PHASE A		PHASE B		PHASE C	
MAG.	PHASE	MAG.	PHASE	MAG.	PHASE
0.45 (0.09) A	0°	0.45 (0.09) A	–120°	0.45 (0.09) A	–240°

5. Apply DC voltage across DI1 (BG8—BG7). Using the MMI and the INFORMATION–VALUES command, verify that **GEN = OFF LINE**.

6. Reduce the three-phase voltage to 29 V rms and verify that test pickup and test trip operate in 5 to 5.05 seconds (see the NOTE below).

7. Remove DC from DI1 (BG8—BG7). Using the MMI and the INFORMATION–VALUES command, verify that **GEN = ON LINE**. Notice that the test trip and test pickup drop out in 0.25 to 0.30 seconds.

8. Change the voltage of all three phases to 29 V rms and change the following setting:

   (2703) **AE - ARM** = OR (1)

9. Verify that the test pickup and test trip operates in 5.00 to 5.05 seconds.

NOTE

VA, VB, and VC must change from 70 V rms to 29 V rms with the source voltage continuously on.

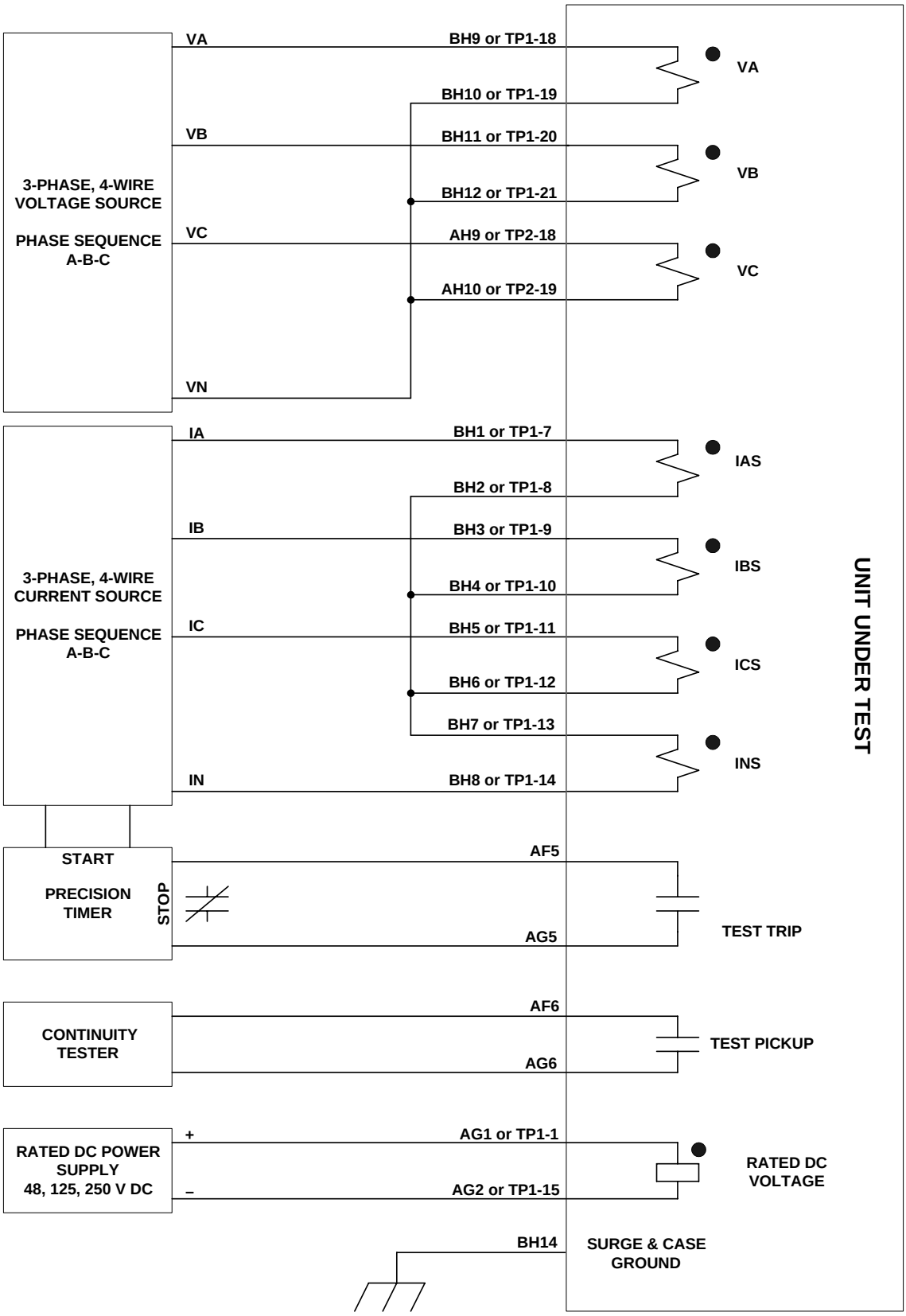

Figure 4–8: STANDARD FUNCTIONAL TEST CONNECTIONS

1. Make the following Settings changes:

   64G1

   (1103) **PICKUP** = 4.0
   (1104) **TL4** = 0.1

2. Connect the relay as shown in Figure 4–9: STATOR GROUND TEST CONNECTIONS on page 4–28.
3. Set up relay in test mode for the 64G1 function; **64G1 ON** will be displayed on the MMI.
4. Set all current inputs to 0. Set the voltage inputs according to the table below.

Table 4–5: VOLTAGE INPUTS FOR TEST T14

TEST	PHASE A		PHASE B		PHASE C	
	MAG.	PHASE	MAG.	PHASE	MAG.	PHASE
A	70 V	0°	70 V	–120°	3.8 V	–240°
B	70 V	0°	70 V	–120°	4.2 V	–240°

5. The following results should be obtained:

   Test A: Test pickup and test trip do not operate.
   Test B: Test pickup operates immediately and test trip operates in 110 to 130 ms.

4.7.12 T15: STATOR GROUND ZONE 2 64G2

Skip this test if your DGP model does not include this function. This function is not available on DGP*ABA model relays.**

NOTE

1. Settings:

   64G2

   (1203) **TL5 =** 0.1

   DIG INP

   (2501) **SELBKDI1** = NO BLK (0)

2. Connect the relay as shown in Figure 4–9: STATOR GROUND TEST CONNECTIONS.
3. Set up relay in test mode for the 64G2 function; **64G2 ON** will be displayed on the MMI.
4. Set the following inputs using 60 Hz for phase A and 180 Hz for phases B and C.

Table 4–6: VOLTAGE INPUTS FOR TEST T15

TEST	PHASE A (60 Hz)		PHASE B (180 Hz)		PHASE C (180 Hz)	
	MAG.	PHASE	MAG.	PHASE	MAG.	PHASE
A	100 V	0°	10 V	0°	1 V	0°
B	100 V	0°	10 V	0°	0.5 V	0°

5. The following results should be obtained:

   Test A: Test pickup and test trip do not operate.
   Test B: Test pickup operates immediately and test trip operates in 110 to 130 ms.

6. Change the following settings:

   (2501) **SELBKDI1** = BLK #2 (2)

7. Apply DC voltage across DI1 (BG8—BG7). Repeat test B and verify that the test contacts do not operate. Remove DC from DI1 (BG8—BG7) and verify that test pickup operates immediately and test trip operates in 110 to 130 ms.

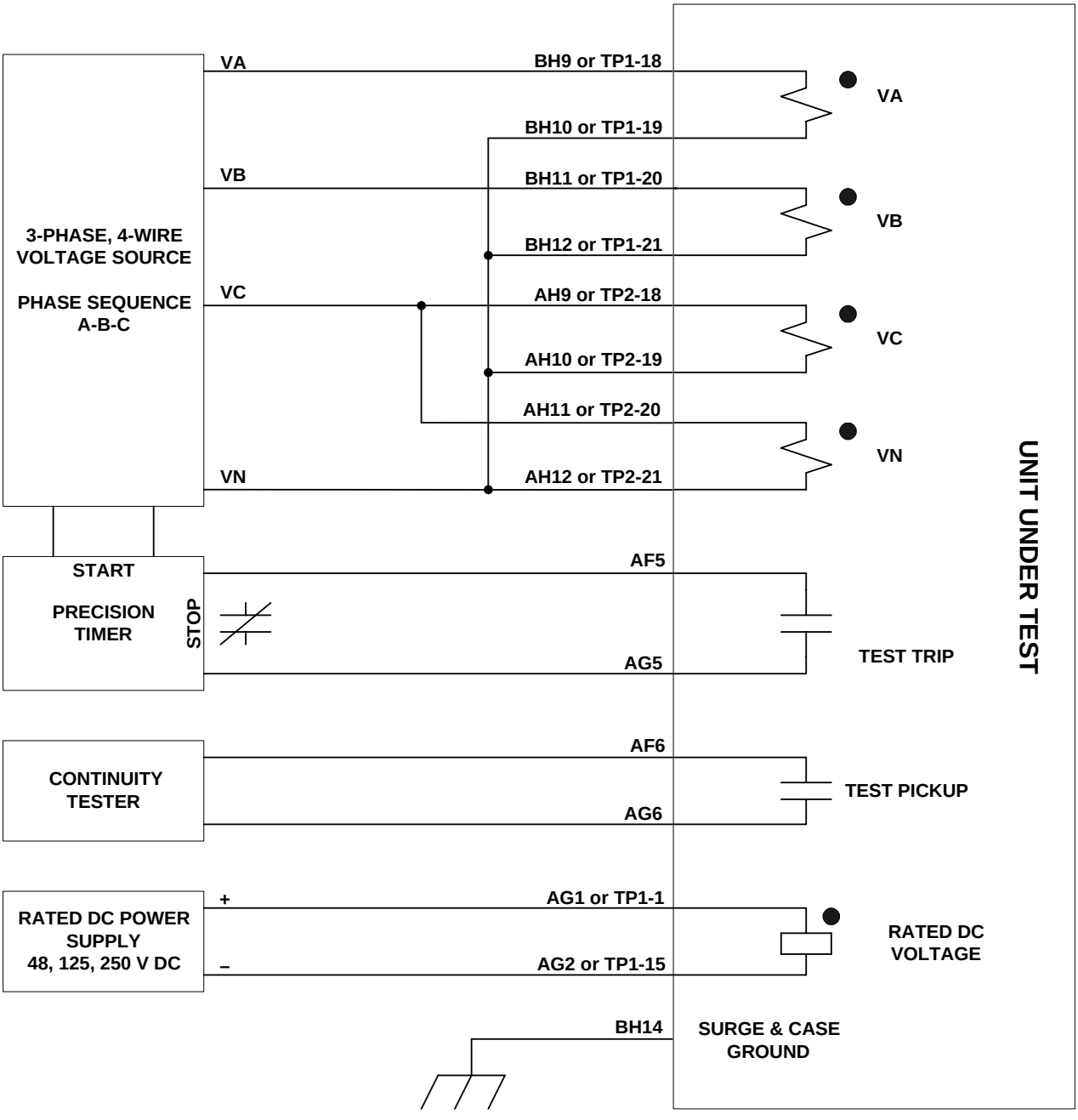

Figure 4–9: STATOR GROUND TEST CONNECTIONS

1. Settings:

   24A

   (1302) **PICKUP** = 1.5
   (1303) **TL6** = 1

2. Connect relay as shown in Figure 4–8: STANDARD FUNCTIONAL TEST CONNECTIONS on page 4–25.
3. Set up relay in test mode for the 24A function; **24A ON** will be displayed on the MMI.
4. Set all current inputs to 0 A. Set the voltage inputs according to the table below:

Table 4–7: VOLTAGE INPUTS FOR TEST T16

TEST	PHASE A		PHASE B		PHASE C		FREQ.
	MAG.	PHASE	MAG.	PHASE	MAG.	PHASE	
A	69 V	0°	69 V	–120°	69 V	–240°	60 Hz
B	114 V	0°	69 V	–120°	69 V	–240°	60 Hz
C	69 V	0°	114 V	–120°	69 V	–240°	60 Hz
D	69 V	0°	69 V	–120°	114 V	–240°	60 Hz
E	69 V	0°	69 V	–120°	69 V	–240°	39 Hz

5. The following results should be obtained:

TEST RESULTS:

Test A: Test pickup and test trip do not operate.
Tests B, C, and D: Test pickup operates immediately and test trip operates in 1.00 to 1.05 seconds.
Test E: Test pickup operates immediately and test trip operates in 1.20 to 1.40 seconds.

1. Settings:

   24T

   (1404) **INV CURV** = 1
   (1405) **INV PU** = 1.5
   (1406) **TIME FAC** = 99.99
   (1407) **INST PU** = 1.5
   (1408) **TL7** = 1
   (1409) **RESET** = 1

2. Connect relay as shown in Figure 4–8: STANDARD FUNCTIONAL TEST CONNECTIONS on page 4–25.
3. Set up relay in test mode for the 24T function; **24T ON** will be displayed on the MMI.
4. Set all current inputs to 0. Using a 60 Hz source, set the voltage inputs according to the following table:

Table 4–8: VOLTAGE INPUTS FOR TEST T17

TEST	PHASE A		PHASE B		PHASE C	
	MAG.	PHASE	MAG.	PHASE	MAG.	PHASE
A	114 V	0°	69 V	–120°	69 V	–240°
B	69 V	0°	114 V	–120°	69 V	–240°
C	69 V	0°	69 V	–120°	114 V	–240°

5. Verify that for all tests in the above table, test pickup operates immediately and test trip operates in 1.0 to 1.05 seconds.
6. Change the following settings:

   24T

   (1406) **TIME FAC** = 1
   (1408) **TL7** = 9.9

7. Repeat step 4. Verify that for all tests in the above except test trip should now operates in 5.0 to 5.5 seconds.



NOTE

If this test is repeated, the operate time of the trip contact will change according to how soon the test is repeated. The trip time can be calculated according to the following equation:

$$\text{New Trip Time} = \frac{T}{\text{RESET}} \times \text{Original Trip Time}$$

where T = the time between successive tests, Original Trip Time = the 5.0 to 5.5 seconds it originally took to trip the relay, and RESET = Setting 1409. If the time between successive trips is greater than the RESET time, the relay will trip in the original trip time.

1. Make the following Settings changes:

   59

   (1503) **PICKUP** = 120
   (1504) **TIME FAC** = 1
   (1505) **CURVE #** =1 (not available for DGP***AAA models)
   (1506) **INST PU** = 240 (available on DGP****CA models only)

2. Connect relay as shown in Figure 4–8: STANDARD FUNCTIONAL TEST CONNECTIONS on page 4–25.
3. Set up relay in test mode for the 59 function; **59 ON** will be displayed on the MMI.
4. Set all current inputs to 0 A. Using a 60 Hz source set the voltage inputs according to the following table.

Table 4–9: CURRENT INPUTS FOR TEST T18

TEST	PHASE A		PHASE B		PHASE C	
	MAG.	PHASE	MAG.	PHASE	MAG.	PHASE
A	65 V	0°	65 V	–120°	65 V	–240°
B	100 V	0°	100 V	–120°	100 V	–240°
C	200 V	0°	200 V	–120°	200 V	–240°

5. The following results should be obtained::

TEST RESULTS

Test A: Test pickup and test trip do not operate.
Test B: Test pickup operates immediately and test trip operates in 2.18 to 2.32 seconds.
Test C: Test pickup operates immediately and test trip operates in 540 to 570 ms (see note below).



NOTE

For DGP****CA models, the trip time should be approximately 30 ms since the instantaneous unit should operate before the inverse curve.

4.7.16 T19: UNDERFREQUENCY UNIT #1 81-1U

1. Make the following Settings changes:

   81

   (1601) **CUTOFF** = 90%

   81-1U

   (1703) **SET PNT** = 60
   (1704) **TL8** = 2

2. Connect relay as shown in Figure 4–8: STANDARD FUNCTIONAL TEST CONNECTIONS on page 4–25.
3. Set up relay in test mode for the 81-1U function; **81-1U ON** will be displayed on the MMI.
4. Set all current inputs to 0. Using a 61 Hz source, set the voltage inputs to:

   VA = 70 V rms ∠0°,
   VB = 70 V rms ∠–120°,
   VC = 70 V rms ∠–240°.

5. Verify that test pickup and test trip do not operate.
6. Change the frequency of the voltage inputs to 59 Hz.
7. Verify that test pickup operates immediately and test trip operates in 2.0 to 2.1 seconds.

4.7.17 T20: UNDERFREQUENCY UNIT #2 81-2U

1. Make the following Settings changes:

   81-2U

   (1803) **SET PNT** = 60
   (1804) **TL9** = 2

2. Connect relay as shown in Figure 4–8: STANDARD FUNCTIONAL TEST CONNECTIONS on page 4–25.
3. Set up relay in test mode for the 81-2U function; **81-2U ON** will be displayed on the MMI.
4. Set all current inputs to 0. Using a 61 Hz source, set the voltage inputs to:

   VA = 70 V rms ∠0°,
   VB = 70 V rms ∠–120°,
   VC = 70 V rms ∠–240°.

5. Verify that test pickup and test trip do not operate.
6. Change the frequency of the voltage inputs to 59 Hz.
7. Verify that test pickup operates immediately and test trip operates in 2.0 to 2.1 seconds.

4.7.18 T21: UNDERFREQUENCY UNIT #3 81-3U

Skip this test if your DGP model does not include this function. This function is not available on DGP*ABA model relays.**

NOTE

1. Make the following Settings changes:

   81-3U

   (1903) **SET PNT** = 60
   (1904) **TL10** = 2

2. Connect relay as shown in Figure 4–8: STANDARD FUNCTIONAL TEST CONNECTIONS on page 4–25.
3. Set up relay in test mode for the 81-3U function; **81-3U ON** will be displayed on the MMI.
4. Set all current inputs to 0. Using a 61 Hz source, set the voltage inputs to:

   VA = 70 V rms ∠0°,
   VB = 70 V rms ∠–120°,
   VC = 70 V rms ∠–240°.

5. Verify that test pickup and test trip do not operate.
6. Change the frequency of the voltage inputs to 59 Hz.
7. Verify that test pickup operates immediately and test trip operates in 2.0 to 2.1 seconds.

4.7.19 T22: UNDERFREQUENCY UNIT #4 81-4U

Skip this test if your DGP model does not include this function. This function is not available on DGP*ABA model relays.**

NOTE

1. Make the following Settings changes:

   81-4U

   (2003) **SET PNT** = 60
   (2004) **TL11** = 2

2. Connect relay as shown in Figure 4–8: STANDARD FUNCTIONAL TEST CONNECTIONS on page 4–25.
3. Set up relay in test mode for the 81-4U function; **81-4U ON** will be displayed on the MMI.
4. Set all current inputs to 0. Using a 61 Hz source, set the voltage inputs to:

   VA = 70 V rms ∠0°,
   VB = 70 V rms ∠–120°,
   VC = 70 V rms ∠–240°.

5. Verify that test pickup and test trip do not operate.
6. Change the frequency of the voltage inputs to 59 Hz.
7. Verify that test pickup operates immediately and test trip operates in 2.0 to 2.1 seconds.

4.7.20 T23: OVERFREQUENCY UNIT #1 81-1O

1. Make the following Settings changes:

   81-1O

   (2103) **SET PNT** = 60
   (2104) **TL15** = 2

2. Connect relay as shown in Figure 4–8: STANDARD FUNCTIONAL TEST CONNECTIONS on page 4–25.
3. Set up relay in test mode for the 81-1O function; **81-1O ON** will be displayed on the MMI.
4. Set all current inputs to 0. Using a 59 Hz source set the voltage inputs to:

   VA = 70 V rms ∠0°,
   VB = 70 V rms ∠–120°,
   VC = 70 V rms ∠–240°.

5. Verify that the test pickup and test trip do not operate.
6. Change the frequency of the voltage inputs to 61 Hz.
7. Verify test pickup operates immediately and test trip operates in 2.0 to 2.1 seconds.

4.7.21 T24: OVERFREQUENCY UNIT #2 81-2O

1. Make the following Settings changes:

   81-2O

   (2203) **SET PNT** = 60
   (2204) **TL16** = 2

2. Connect relay as shown in Figure 4–8: STANDARD FUNCTIONAL TEST CONNECTIONS on page 4–25.
3. Set up relay in test mode for the 81-2O function; **81-2O ON** will be displayed on the MMI.
4. Set all current inputs to 0. Using a 59 Hz source set the voltage inputs to:

   VA = 70 V rms ∠0°,
   VB = 70 V rms ∠–120°,
   VC = 70 V rms ∠–240°.

5. Verify that the test pickup and test trip do not operate.
6. Change the frequency of the voltage inputs to 61 Hz.
7. Verify test pickup operates immediately and test trip operates in 2.0 to 2.1 seconds.

4.7.22 T25: OVERFREQUENCY UNIT #3 81-3O

Skip this test if your DGP model does not include this function. This function is not available on DGP*ABA and DGP****CA model relays.**

NOTE

1. Make the following Settings changes:

   81-3O

   (2303) **SET PNT** = 60
   (2304) **TL17** = 2

2. Connect relay as shown in Figure 4–8: STANDARD FUNCTIONAL TEST CONNECTIONS on page 4–25.
3. Set up relay in test mode for the 81-3O function; **81-3O ON** will be displayed on the MMI.
4. Set all current inputs to 0. Using a 59 Hz source set the voltage inputs to:

   VA = 70 V rms ∠0°,
   VB = 70 V rms ∠–120°,
   VC = 70 V rms ∠–240°.

5. Verify that the test pickup and test trip do not operate.
6. Change the frequency of the voltage inputs to 61 Hz.
7. Verify test pickup operates immediately and test trip operates in 2.0 to 2.1 seconds.

4.7.23 T26: OVERFREQUENCY UNIT #4 81-4O

Skip this test if your DGP model does not include this function. This function is not available on DGP*ABA and DGP****CA model relays.**

NOTE

1. Make the following Settings changes:

   81-4O

   (2403) **SET PNT** = 60
   (2404) **TL18** = 2

2. Connect relay as shown in Figure 4–8: STANDARD FUNCTIONAL TEST CONNECTIONS on page 4–25.
3. Set up relay in test mode for the 81-4O function; **81-4O ON** is displayed on the MMI.
4. Set all current inputs to 0. Using a 59 Hz source set the voltage inputs to:

   VA = 70 V rms ∠0°,
   VB = 70 V rms ∠–120°
   VC = 70 V rms ∠–240°.

5. Verify that the test pickup and test trip do not operate.
6. Change the frequency of the voltage inputs to 61 Hz.
7. Verify test pickup operates immediately and test trip operates in 2.0 to 2.1 seconds.

4.7.24 T27: VOLTAGE TRANSFORMER FUSE FAILURE VTFF

1. Make the following Settings changes:

   DIG INP

   (2501) **SELBKDI1** = NO BLK (0)

   VTFF

   (2601) **VTFF** = DISABLE (0) – set for TEST mode only

2. Connect relay as shown in Figure 4–8: STANDARD FUNCTIONAL TEST CONNECTIONS on page 4–25.
3. Set up relay in test mode for the VTFF function; **VTFF ON** will be displayed on the MMI.
4. Set the voltage inputs to:

   VA = 70 V rms ∠0°,
   VB = 70 V rms ∠–120°,
   VC = 70 V rms ∠–240°.

5. Set the current inputs to:

   IAS = 0.5 A rms ∠90°,
   IBS = 0.5 A rms ∠–30°,
   ICS = 0.5 A rms ∠–150°.

6. Verify that neither the test pickup nor the test trip operates.
7. Decrease the voltage in all three phases to 49 V rms. Verify that test pickup and test trip operate in 12.4 to 13.0 seconds.

4.7.25 T28: TOC GROUND OVERCURRENT 51GN



NOTE

Skip this test if your DGP model does not include this function. This function is not available on DGP*AAA model relays.**

1. Make the following Settings changes:

   51GN

   (2803) **PICKUP** = 0.5 (0.1)
   (2804) **TIME FAC** = 1.0

2. Connect as shown in Figure 4–6: GENERATOR DIFFERENTIAL TEST CONNECTIONS on page 4–18.
3. Set up relay in test mode for the 51GN function; **51GN ON** will be displayed on the MMI.
4. Set the current input to: IAR = 0.45 (0.09) A rms. Set the voltage inputs to:

   VA = 70 V rms ∠0°,
   VB = 70 V rms ∠–120°,
   VC = 70V rms ∠–240°.

5. Verify that neither the test pickup nor the test trip operates.
6. Increase the current input to: IAR = 1.5 (0.3) A rms. Verify that test pickup operates immediately, and test trip operates in 1.30 to 1.45 seconds.
7. Repeat steps 4 and 5, but use 20 (4.0) A rms in step 4, and verify that test pickup operates immediately and test trip operates in 184 to 204 ms.

4.7.26 T29: UNDERVOLTAGE 27

Skip this test if your DGP model does not include this function. This function is not available on DGP*AAA model relays.**

NOTE

1. Make the following Settings changes:

   27

   (2903) **PICKUP** = 100
   (2904) **TIME FAC** = 1.0
   (2905) **CURVE #** = 1

2. Connect relay as shown in Figure 4–8: STANDARD FUNCTIONAL TEST CONNECTIONS on page 4–25.
3. Set up relay in test mode for the 27 function; **27 ON** will be displayed on the MMI.
4. Set the voltage inputs to: VA = 70 V rms ∠0°, VB = 70 V rms ∠–120°, and VC = 70 V rms ∠–240°. Verify that neither the test pickup nor the test trip operates.
5. Decrease the voltage inputs to: VA = 30 V rms ∠0°, VB = 30 V rms ∠–120°, and VC = 30 V rms ∠–240°. Verify that test pickup operates immediately, and test trip operates in 1.03 to 1.15 seconds.

4.7.27 T30: THIRD HARMONIC NEUTRAL UNDERVOLTAGE 27TN

Skip this test if your DGP model does not include this function. This function is not available on DGP*AAA and DGP***ABA model relays.**

NOTE

1. Settings:

   27TN

   (3003) **PICKUP** = 0.9
   (3004) **TL20** = 2.0
   (3005) **FORPWR-L** = 10
   (3006) **FORPWR-H** = 20

2. Connect relay as shown in Figure 4–10: STATOR GROUND TEST FOR 27TN FUNCTION on page 4–38.
3. Set up relay in test mode for the 27TN function; **27TN ON** will be displayed on the MMI.
4. Set the voltage and current (rms) inputs to:

   VA = 80 V ∠0°, 60 Hz
   VN = 1 V ∠0°, 180 Hz
   IAS = 0.1 A ∠0°, 60 Hz

5. Verify that neither the test pickup nor the test trip operates.
6. Reduce VN to 0 V. Verify that test pickup operates immediately and test trip operates in 2.0 to 2.1 seconds.
7. Change IAS to 0.2 A ∠0°, 60Hz. Verify that test pickup and test trip do not operate.
8. Change IAS to 0.3 A ∠0°, 60Hz. Verify that test pickup operates immediately, and test trip operates in 2.0 to 2.1 seconds.

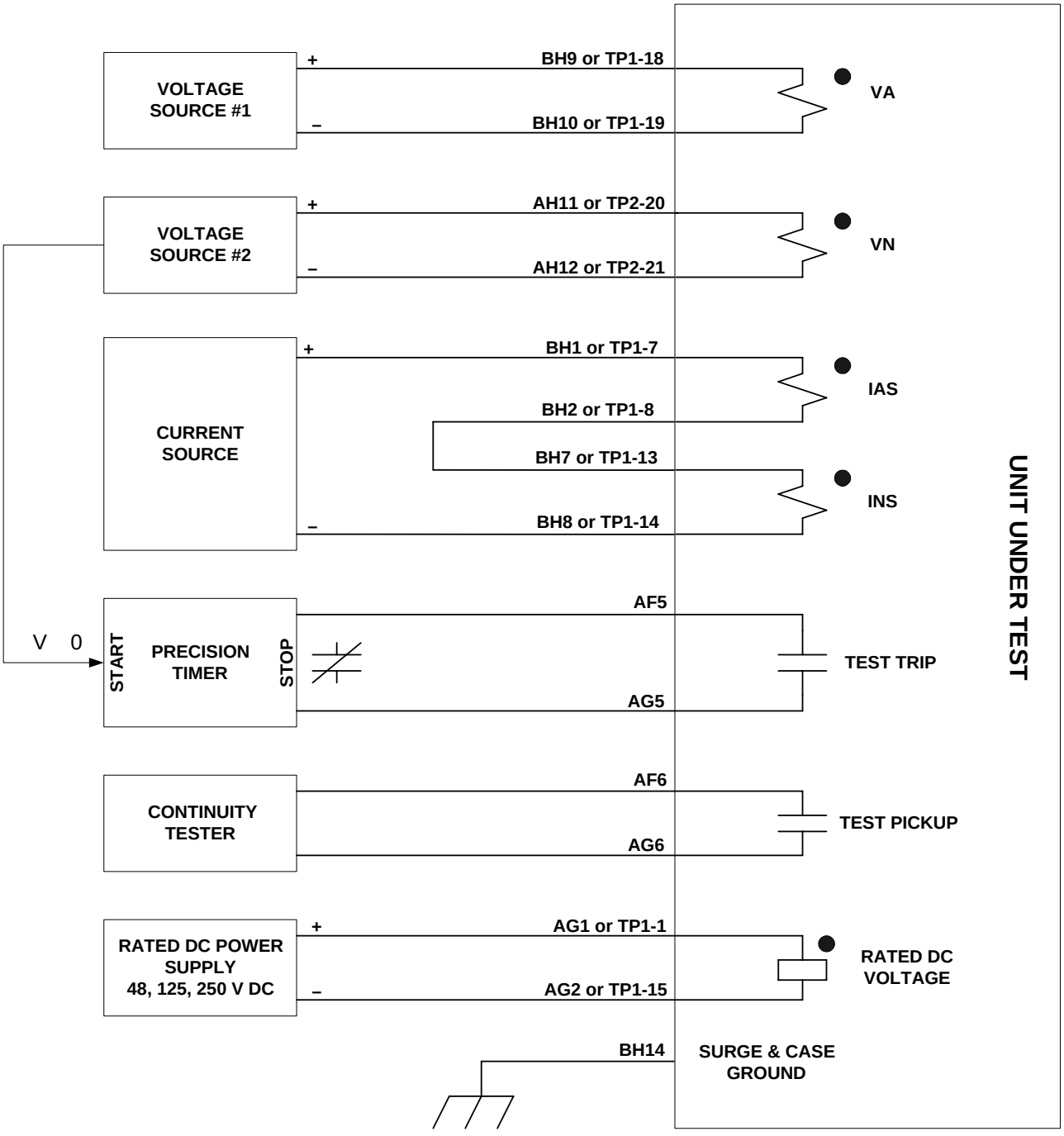

Figure 4–10: STATOR GROUND TEST FOR 27TN FUNCTION

4.8.1 DESCRIPTION

Make sure that the relay is no longer in test mode; by selecting **END TEST MODE**.

Print out or scroll through all of the settings. Compare them with the initial Settings of the relay, and change to initial values.

If the initial settings were saved to a disk file before testing using DGP-PC, download the file to the relay!

5.1.1 DESCRIPTION

Power Down the relay by removing the test plugs before removing or inserting modules. Failure to do so can permanently damage the relay.

CAUTION

The formulas below will permit the calculation of pickup currents and voltages for testing the DGP™ system with settings specific to a particular application. The test circuits and procedures are the same as used and illustrated in Chapter 4: ACCEPTANCE TESTS.

It is up to the user to determine the extent of the testing to be performed. The tests shown are guides for performing the test; they are not strictly required to be done at every periodic test of the relay. The desired test procedures can be incorporated into the user's standard test procedures.

However, it is suggested that the relay's built-in self-tests be incorporated into the user's test procedures. They will give the operational status of the unit.

It is assumed that the user is familiar with testing the DGP system. If not, refer to Chapter 4: ACCEPTANCE TESTS for details.

5.1.2 GENERAL TESTS

- T1: MMI Status and Display Tests (Self Tests)
- T2: Digital Output Test
- T3: Digital Input Test
- T4: AC System Input Test

5.1.3 PROTECTION FUNCTION TESTS

- T5: Generator Differential, 87G
- T6: Current Unbalance Alarm, 46A
- T7: Current Unbalance Trip, 46T
- T8: Loss of Excitation, 40-1
- T9: Anti-Motoring with Accidental Energization and Sequential Trip Supervision, 32-1
- T10: Time Overcurrent with Voltage Restraint, 51V
- T11: Stator Ground Zone1, 64G1
- T12: Stator Ground Zone2, 64G2 *****
- T13: Overexcitation (Volts/Hz) Alarm, 24A
- T14: Overexcitation (Volts/Hz) Trip, 24T
- T15: Overvoltage, 59
- T16: Underfrequency, 81-1U
- T17: Overfrequency, 81-1O
- T18: Voltage Transformer Fuse Failure, VTFF
- T19: TOC Ground Overcurrent, 51GN *****
- T20: Undervoltage, 27 *****

***** Functions available on some models only.

5.1.4 GENERAL INSTRUCTIONS

1. Refer to Chapter 4: ACCEPTANCE TESTS for general information on preparing the DGP for testing.
2. Before beginning the test, the relay settings should be printed for reference and verification. If no printer is available, scroll through each setting and make sure they match the required settings of the relay.

5.2.1 T1: RELAY STATUS & MMI

The DGP status is reported through the MMI, the non-critical alarm contact, and the critical alarm contact. If a system error causes relaying functions to cease, the LED on the MMI turns red, a **FAIL** message is displayed, and the critical alarm relay de-energizes. A failure that did not interrupt relaying is indicated by energization of the non-critical alarm relay and a **WARN** message on the MMI display.

If a STATUS error is detected, see Section 6.3.5: SERVICING SYSTEM STATUS FAILURES on page 6–6 for further information.

a) STATUS CHECK

1. Apply rated DC power and wait for initialization to complete, as indicated by the green LED.
2. Press the [INF] key. Then scroll with the arrow keys until the heading **INF: STATUS** is displayed.
3. Press the [ENT] key.

   The display should read **STATUS OK**.

b) DISPLAY TEST

The MMI test is built into the software. It allows the user to test the keypad, the printer, and the display. If no printer is to be used with your relay, then skip the printer port testing.

1. Apply rated DC power and wait for initialization to complete, as indicated by the green LED.
2. Press the [ACT] key. Then scroll with the arrow keys until the heading **ACT: MMI TEST** is displayed.
3. Press the [ENT] key.

   The display should show **NEXT?**.
4. Press the [1/Y] followed by the [ENT] key.

   The display will change to **LED TST?**.
5. Press the [1/Y] followed by the [ENT] key.

   If the green LED is on, it will be extinguished and the red LED will be lit. If the red LED is lit, it will be extinguished and the green LED will be lit. The target LEDs will then flash on/off 4 times. Then each Target LED will be lit individually. When the test is over the target LEDs will be returned to their original state.
6. Next, the display will prompt for the keyboard test with **KEYBRD TST?**.
7. Press the [1/Y] key followed by the [ENT] key.
8. At this point the MMI is in the keyboard test. Press every key on the keypad, except for the [CLR] key. As you press each key, verify that the display indicates the key that was pressed.
9. When all the keys have been checked, press the [CLR] key.
10. The display will prompt **PRINTER TST?**. If you do not have a printer, the press the [3/N] followed by the [ENT] key. If you have a printer, press the [1/Y] followed by the [ENT] key.

    The printout will be 40 characters, which include the alphabet, the numbers 0 through 9, as well as the ":", "=", "/" and "." characters. Forty lines will be printed.

5.2.2 T2: DIGITAL OUTPUT TEST

This test is used to check all outputs of the relay. It is a convenient way to determine proper system connections and verify the operation of all relay contacts, without having to apply currents and voltages to simulate faults.

NOTE

If DGP-Link is used to perform this test, the outputs will not operate unless jumper J1 on the MMI module is removed. Refer to Figure 3–4: DGP MMI MODULE on page 3–5 .

1. Connect the relay as shown in Figure 4–3: DIGITAL OUTPUT TEST CONNECTIONS on page 4–12.
2. Enter the Control Level password.
3. Press the [ACT] key and then select **DIG OUT TEST**. Press the [ENT] key.
4. Select the output to test. Use the arrow keys to scroll to the desired output, such as 94G, and press the [ENT] key.

   Before the contact is allowed to close, you will be prompted to turn protection off during the test. The prompt is: **DISABLE PROT?**. Press the [1/Y] key followed by the [ENT] key to turn protection off. Protection will remain off until the test mode is ended.

   Verify that the output under test has closed, using an ohmmeter or other suitable device.
5. After the output is tested, scroll to the next output to test, then press the [ENT] key. This output will close and the previously selected output will open. Continue in this fashion until all outputs are tested.
6. End the test mode by scrolling to the **END TEST MODE** selection, then press the [ENT] key. Alternatively, [END] followed by the [ENT] can be pressed to end the test and re-enable protection.

5.2.3 T3: DIGITAL INPUT TEST

This test is used to check all digital inputs of the relay. It is a convenient way to determine proper system connections and verify the operation of all dual optically isolated digital inputs. All digital inputs should be between 35 and 300 V DC.

Protection can be enabled or disabled, as deemed necessary by the user.

1. Connect the relay as shown in Figure 4–4: DIGITAL INPUT TEST CONNECTIONS on page 4–14.
2. Apply DC across digital input DI1 (BG8—BG7). Using the MMI and the INFORMATION–VALUES command, verify that **GEN = OFF-LINE**.
3. Remove DC from digital input DI1 (BG8—BG7). Using the MMI and the INFORMATION–VALUES command, verify that **GEN = ON-LINE**.
4. Apply DC across digital input DI2 (BG6—BG5). Using the MMI and the INFORMATION–VALUES command, verify that **INLET VLV=CLOSED**.
5. Remove DC from digital input DI2 (BG6—BG5). Using the MMI and the INFORMATION–VALUES command, verify that **INLET VLV=OPEN**.
6. Apply DC across digital input DI3 (BG4—BG3). Using the MMI and the INFORMATION–VALUES command, verify that **DIG IN 3 = CLOSE**.
7. Remove DC from digital input DI3 (BG4—BG3). Using the MMI and the INFORMATION–VALUES command, verify that **DIG IN 3 = OPEN**.
8. Apply DC across digital input DI4 (BG2—BG1). Using the MMI and the INFORMATION–VALUES command, verify that **DIG IN 4 = CLOSE**.

9. Remove DC from digital input DI4 (BG2—BG1). Using the MMI and the INFORMATION–VALUES command, verify that **DIG IN 4 = OPEN**.
10. Apply DC across digital input DI5 (BE4—BE3). Using the MMI and the INFORMATION–VALUES command, verify that **OSC TRIG = CLOSE**.

    NOTE: This input is not active on some DGP models.
11. Remove DC from digital input DI5 (BE4—BE3). Using the MMI and the INFORMATION–VALUES command, verify that **OSC TRIG = OPEN**.

    NOTE: This input is not active on some DGP models.
12. Apply DC across digital input DI6 (BE2—BE1). Using the MMI and the INFORMATION–VALUES command, verify that **DIG IN 6 = CLOSE**.
13. Remove DC from digital input DI6 (BE2—BE1). Using the MMI and the INFORMATION–VALUES command, verify that **DIG IN 6 = OPEN**.

5.2.4 T4: AC SYSTEM INPUT TEST

This initial test uses the INFORMATION–VALUES command to determine that the voltages and currents are applied to the proper connections on the terminal strip. The INFORMATION–VALUES command can be used at any time during the test to verify that the relay has the correct voltages and currents applied.

1. Connect the relay as shown in Figure 4–5: AC SYSTEM INPUT TEST CONNECTIONS on page 4–16.
2. Using a 60 Hz source set the current (rms) inputs to:

   IA = 0.5 (0.1) A ∠0°,
   IB = 2.0 (0.4) A ∠–120°,
   IC = 15.0 (3.0) A ∠–240°
3. Set the voltage (rms) inputs to:

   VA = 20 V ∠0°,
   VB = 70 V ∠–120°,
   VC = 120 V ∠–240°.
4. Press the [INF] key. Scroll with arrow keys to the **INF: VALUES** heading, then press the [ENT] key. The present values are now selected.
5. With the arrow keys, scroll through the values of:

   IAS, ANGLE IAS

   IBS, ANGLE IBS

   ICS, ANGLE ICS

   IAR, ANGLE IAR

   IBR, ANGLE IBR

   ICR, ANGLE ICR

   VAN, ANGLE VAN

   VBN, ANGLE VBN

   VCN, ANGLE VCN

   GEN FREQ

6. Check that all frequency measurements are within 0.01 Hz and all voltage and current measurements are within 3% of their set amplitude and 1° of their set phase.



NOTE

There are other quantities listed between the values of ANGLE VCN and GEN FREQ these will be tested in another section.

7. If a PC is connected to the DGP, the present values can be read with the DGP-Link software. Alternately, whenever the MMI display is blank, pressing the [CLR] key will automatically scroll through all of the present values.
8. Repeat steps 2 through 6 using the following source frequencies: 30.5 and 79.5 Hz.

5.3.1 DESCRIPTION

CAUTION

The test contacts will chatter when the unit under test is near its threshold. *DO NOT LET IT CONTINUE. REMOVE THE TEST CURRENT.* A single contact closure is enough to determine that the unit has picked up or tripped.

Prior to each test there is space provided to record the user specific setting for the function under test.

Where appropriate, current levels are defined with two numbers as *xx (yy)*; *xx* represents the value to be used for relays rated at 5 A and *yy* represents the value to be used for 1 A relays.

5.3.2 T5: GENERATOR DIFFERENTIAL TEST 87G

1. Record the following Settings:

   87G

   (203) **K1** = _____%
   (204) **PICKUP** (Differential Current) = _____ A rms

2. Differential Protection is calculated with the following equation:

   $$\left|I_{AR} - I_{AS}\right|^2 > \frac{K1}{100} \cdot I_{AR} \cdot I_{AS} \quad \text{(equation 5–1)}$$

   I_{AR} and I_{AS} are the return and source current for phase A. The unit should pick up when equation 5–1 is true and the differential is greater than the pickup setting.

3. Connect the relay as shown in Figure 4–6: GENERATOR DIFFERENTIAL TEST CONNECTIONS on page 4–18.

4. Set up relay in test mode for the 87G function; **87G ON** will be displayed on the MMI.

5. Set the in-phase currents of I_{AR} and I_{AS} to make equation 5–1 true. This should operate the test pickup and test trip relays. Set the currents of I_{AR} and I_{AS} to make equation 5–1 false. This should not operate the test pickup and test trip relays.

5.3.3 T6: CURRENT UNBALANCE ALARM 46A

1. Record the following Settings:

   46A

   (302) **PICKUP** (I_2) = _____ A rms
   (303) **TL14** (time delay) = _____ sec.

2. Current Unbalance Alarm is calculated with the following equation:

   $I_2 >$ **PICKUP** (equation 5–2)

   I_2 is equal to the negative-sequence current. The unit should pick up when $I_2 >$ **PICKUP**. The unit should trip with time delay as set in **TL14** after it has picked up.

3. Connect relay as shown in Figure 4–7: CURRENT UNBALANCE TEST CONNECTIONS on page 4–20.

4. Set up relay in test mode for the 46A function; **46A ON** will be displayed on the MMI.

5. Set the negative-sequence current to **PICKUP** + 0.1 (0.02) =_____ A rms and apply to the relay. The test pickup relay should operate and **TL14** seconds later the test trip relay should operate. Lower the negative-sequence current to **PICKUP** – 0.1 (0.02) =_____ A rms and the test pickup and test trip relays should not operate.

1. Record the following Settings:

   46T

   (403) **PICKUP** (I_2) = _____ A rms
   (404) **K2** (Time Factor) = _____ sec.

2. Current Unbalance Trip is calculated with the following equation:

$$\text{Trip Time} = \frac{K2}{(I_2/I_{rated})^2} \quad \text{(equation 5–3)}$$

   I_2 is equal to the negative-sequence current, **K2** is equal to the time factor, and I_{rated} is equal to the rated current (Setting 115: **RATEDCUR**). The unit should pick up when I_2 > **PICKUP**. If the unit has been picked up for a time equal to the Trip Time, the test trip relay will operate.

3. Connect relay as shown in Figure 4–7: CURRENT UNBALANCE TEST CONNECTIONS on page 4–20.

4. Set up relay in test mode for the 46T function; **46T ON** will be displayed on the MMI.

5. Set the negative-sequence current to **PICKUP** + 0.1 (0.02) =_____ A rms and apply to the relay. The test pickup relay should operate and the test trip relay should operate after the Trip Time has expired.

6. Lower the negative-sequence current to **PICKUP** – 0.1 (0.02) =_____ A rms and the test pickup and test trip relays should not operate.

NOTE

If this test is repeated, the operate time of the trip contact will change according to how soon the test is repeated. The trip time can be calculated according to the following equation:

$$\text{New Trip Time} = \frac{T}{230} \times \text{Original Trip Time}$$

where T = the time between successive tests and Original Trip Time = the time to trip the relay when the test was first run. If the time between successive trips is greater than 230 seconds, the relay will trip in the original trip time.

1. Make/record the following Settings:

   40

   (501) **SELV2SUP** = DISABLE (0)

   40-1

   (603) **CENTER** (Center of Zone 1) = _____ ohms
   (604) **RADIUS** (Radius of Zone 1) = _____ ohms
   (605) **TL12** (Time Delay) = _____ sec.

2. Loss of Excitation is calculated with the following equation:

   $$Z = \frac{V_a - V_b}{I_a - I_b}$$ (equation 5–4)

   V_a and V_b are vector-phase voltages, I_a and I_b are vector-phase currents, and Z is the corresponding impedance. If the value of Z falls within the Mho circle of the relay, the test pickup will operate and the test trip will operate **TL12** seconds later.

3. Connect relay as shown in Figure 4–8: STANDARD FUNCTIONAL TEST CONNECTIONS on page 4–25.

4. Set up relay in test mode for the 40-1 function; **40-1 ON** will be displayed on the MMI. Using the MMI and the INFORMATION–VALUES command, verify that **EXT VTFF = OPEN**.

5. Using a 60 Hz source set the voltage (rms) inputs to:

   VA = 35 V ∠0°
   VB = 35 V ∠–120°
   VC = 35 V ∠–240°.

6. Set the phase current so that the impedance falls within the Mho circle and apply to the relay. The test pickup relay should operate immediately and **TL12** seconds later the test trip relay should operate.

7. Change the phase current so that the impedance falls outside the Mho circle, and apply to the relay. The test pickup and test trip relays should not operate.

8. Apply DC voltage across DI6 (BE2—BE1). Using the MMI and the INFORMATION–VALUES command, verify that **EXT VTFF = CLOSE**.

9. Reapply the above phase current that placed the impedance inside the Mho circle. Verify that the test pickup operates and the test trip does not operate.

1.

This is a periodic test of anti-motoring with accidental energization and sequential trip supervision.

1. Record the following Settings:

   32-1

   (803) **SQ TR EN** (Seq. Trip Enable) = _____ (Y/N)
   (804) **REV PWR** (Reverse Power) = _____ W
   (805) **TL1** (Time Delay) = _____ S

2. Anti-Motoring is calculated with the following equation:

   $$P + jQ = V_a \cdot I_{sa} + V_b \cdot I_{sb} + V_c \cdot I_{sc} \quad \text{(equation 5–5)}$$

   V_a, V_b, and V_c are vector-phase voltages, I_{sa}, I_{sb} and I_{sc} are vector-phase currents, P is the real output power, and Q is the imaginary output power. If the value of P is greater than Setting 804: **REV PWR**, the test pickup will operate. Depending on the state of DI1, DI2, and Sequential Trip Enable (Setting 803: **SQ TR EN**), the test trip will, or will not, operate. See Figure 1–3: SIMPLE LOGIC DIAGRAM – 87G, 32, 27, 59, AND AE on page 1–13 for details.

3. Connect relay as shown in Figure 4–8: STANDARD FUNCTIONAL TEST CONNECTIONS on page 4–25.
4. Set up relay in test mode for the 32-1 function; **32-1 ON** will be displayed on the MMI.
5. Change Setting 803: **SQ TR EN** to YES [1/Y].
6. Set the phase voltages and currents to **REV PWR** + 0.1 =_____ W and apply to the relay. The test pickup relay should operate immediately.
7. Apply DC to DI2 (BG6—BG5). Using the MMI and the INFORMATION–VALUES command, verify that **INLET VLV = CLOSED**.
8. The test pickup relay should operate immediately and TL1 seconds later the test trip relay should operate.
9. Leaving all of the AC signals applied, remove DC from DI2 (BG6—BG5). Using the MMI and the INFORMATION–VALUES command, verify that **INLET VLV = OPEN**. Check that the test trip contact has dropped out.
10. Change Setting 803: **SQ TR EN** to NO (3/N). Leaving all of the AC signals applied, notice that the test pickup operates immediately and the test trip operates in 5.0 to 5.1 seconds.
11. Return Setting 803: **SQ TR EN** to its original value.

5.3.7 T10: TIME OVERCURRENT WITH VOLTAGE RESTRAINT 51V

1. Record the following Settings:

   51V

   (1003) **PICKUP** (Overcurrent Pickup) = _____ A
   (1004) **TIME FAC** (Time Factor *K*) = _____ sec.

2. Time Overcurrent is calculated with the following equation:

$$\text{Trip Time} = \frac{K}{\sqrt{(I \cdot V_{NOM}) / (I_{pu} \cdot V)} - 1} \quad \text{(equation 5–6)}$$

   where: K = time factor
   I = phase current
   V_{NOM} = nominal voltage
   I_{pu} = pickup level for overcurrent
   V = phase to phase voltage

   The time factor K is Setting 1004: **TIME FAC**. Phase current I is the current applied to any one phase. Nominal voltage V_{NOM} is Setting 114: **NOM VOLT**, the pickup level for overcurrent I_{pu} is Setting 1003: **PICKUP**, and the phase to phase voltage V is the voltage in the corresponding phase. If the value of phase current is greater than Setting 1003: **PICKUP**, the test pickup will operate. If the phase current is above Setting 1003: **PICKUP** for a time equal to Trip Time, the test trip relay will operate.

3. Connect relay as shown in Figure 4–8: STANDARD FUNCTIONAL TEST CONNECTIONS on page 4–25.
4. Set up relay in test mode for the 51V function; **51V ON** will be displayed on the MMI.
5. Using a 60 Hz source set the voltage (rms) inputs to:

   VA = 70 V ∠0°
   VB = 70 V ∠–120°
   VC = 70 V ∠–240°

6. Set the current input to **PICKUP** + 0.1 (0.02) =_____ A rms and apply to the relay. The test pickup relay should operate immediately and the test trip relay should operate after the Trip Time has expired.
7. Lower the current to **PICKUP** – 0.1 (0.02) =_____ A rms and the test pickup and test trip relays should not operate.
8. Apply DC voltage across DI6 (BE2—BE1). Using the MMI and the INFORMATION–VALUES command, verify that **EXT VTFF = CLOSE**.
9. Set the current input to **PICKUP** + 0.1 (0.02) =_____ A rms and apply to the relay. Verify that the test pickup operates but the test trip does not operate.
10. While continuing to input the current, remove the DC from DI6 (BE2—BE1). The test pickup operates immediately and test trip operates after Trip Time expires.

5.3.8 T11: STATOR GROUND ZONE 1 64G1

1. Record the following Settings:

   64G1

   (1103) **PICKUP** (Neutral Overvoltage) = _____ V rms
   (1104) **TL4** (Time Delay) = _____ sec.

2. The Fundamental Frequency Neutral Overvoltage is calculated with the following equation:

   V_n > **PICKUP** (equation 5–7)

   V_n is equal to the neutral voltage. The unit should pick up when V_n > **PICKUP**. The unit should trip **TL4** seconds after it has picked up.

3. Connect the relay as shown in Figure 4–9: STATOR GROUND TEST CONNECTIONS on page 4–28.
4. Set up relay in test mode for the 64G1 function; **64G1 ON** will be displayed on the MMI.
5. Using a 60 Hz source, set the voltage (rms) inputs to: VA = 70 V ∠0° and VB = 70 V ∠–120°. Set the VC (paralleled with V_n) to **PICKUP** + 0.1 (0.02) =_____ V rms and apply to the relay. The test pickup relay should operate, and TL4 seconds later the test trip relay should operate.
6. Lower the VC voltage to **PICKUP** – 0.1(0.02) =_____ V rms and the test pickup and test trip relays should not operate.

5.3.9 T12: STATOR GROUND ZONE 2 64G2



NOTE

Skip this test if your model of DGP does not have this function. This function is not available on DGP*ABA models.**

1. Record the following Settings:

   64G2

   (1203) **TL5** (Time Delay) = _____ sec.

   DIG INP

   (2501) **SELBKDI1** (Blocking Scheme) = _____

2. The Percentage of 3rd Harmonic in the Neutral is calculated with the following equation:

$$\frac{V_{n3}}{(V_{p3}/3) + V_{n3}} < 0.15 \quad \text{(equation 5–8)}$$

   V_{n3} is the 3rd harmonic voltage in the generator neutral and V_{p3} is the sum of all 3rd harmonic voltages in all phases. The unit should pick up when equation 5–8 is true and trip **TL5** seconds after it has picked up.

3. Connect the relay as shown in Figure 4–9: STATOR GROUND TEST CONNECTIONS on page 4–28.
4. Set up relay in test mode for the 64G2 function; **64G2 ON** will be displayed on the MMI.
5. Set Setting 2501: **SELBKDI1** to NO BLK (0). Set the AC inputs using 60 Hz for phase A and 180 Hz for phases B and C. The phase angles for all three signals should be 0°. VA should be 100 V rms and VB and VC (paralleled with VN) should be changed to make equation 5–8 true. This will cause the test pickup relay to operate, and **TL5** seconds later the test trip relay will operate.
6. Change Setting 2501: **SELBKDI1** to BLK#2 (2). Apply DC voltage across DI1 (BG*—BG7). Re-apply the AC inputs of step 3 and verify that only the test pickup operates.

5.3.10 T13: VOLTS/HERTZ OVEREXCITATION ALARM 24A

1. Record the following Settings:

   24A

   (1302) **PICKUP** (V/Hz Pickup) = _____
   (1303) **TL6** (V/Hz Time Delay) = _____ sec.

2. Volt/Hertz Overexcitation Alarm is calculated with the following relation:

   $$\text{Actual V/Hz} = \frac{\text{PICKUP} \times V_{NOM}}{\text{SYSFREQ}} \quad \text{equation 5–9}$$

   Actual V/Hz is the voltage applied to any one phase divided by the frequency applied. PICKUP is Setting 1302: **PICKUP**, V_{NOM} is defined by

   $$V_{NOM} = \frac{\text{NOM VOLT}}{x} \quad \text{equation 5–10}$$

   where NOM VOLT is the nominal voltage Setting 114: **NOM VOLT**, and x = 1.732 or 1, depending on Setting 116: **VTCONN** (for WYE, x = 1.732; for DELTA, x = 1). SYSFREQ is Setting 102. If equation 5–9 is satisfied, the test pickup relay will operate. If this condition persist for a time equal to TL-6, the test trip relay will operate.

3. Connect relay as shown in Figure 4–8: STANDARD FUNCTIONAL TEST CONNECTIONS on page 4–25.
4. Set up relay in test mode for the 24A function; **24A ON** will be displayed on the MMI.
5. Set all current inputs to 0. Set:

   VA = 70 V rms ∠0°
   VB = 70 V rms ∠–120°
   VC = 70 V rms ∠–240°

6. Change the voltage of any one phase until Voltage/Frequency is equal to: V/Hz setting + 0.1 = _____. This will cause the test pickup relay to operate and the test trip relay will operate after the Trip Time has expired.
7. Change the voltage of any one phase until Voltage/Frequency is equal to: V/Hz setting – 0.1 =_____. The test pickup and test trip relays will not operate.

1. Record the following Settings:

   24T

   (1404) **INV CURV** (Curve Type) = _____
   (1405) **INV PU** (V/Hz Inverse Pickup) = _____
   (1406) **TIME FAC** (Time Factor, K) = _____ sec.
   (1407) **INST PU** (V/Hz Pickup) = _____
   (1408) **TL7** (Time Delay for INST PU) = _____ sec.
   (1409) **RESET** (Reset Time between Trips) = _____

2. Volt/Hertz Overexcitation Trip Time is calculated with the following equations

   For Inverse Operation:

$$\text{Actual Volts/Hz} > \frac{\text{INV PU} \cdot V_{NOM}}{\text{SYSFREQ}}$$

$$\text{Trip Time} = \frac{K}{(\text{Actual V/Hz} / \text{INV PU})^{N} - 1} \quad \text{for inverse curves 1, 2 and 3}$$

   or

$$\text{Trip Time} = K \quad \text{for inverse curve 4}$$

   where N = 2, 1, and 0.5 for Curves 1, 2, and 3, respectively.

   For Instantaneous Operation:

$$\text{Actual Volts/Hz} > \frac{\text{INV PU} \cdot V_{NOM}}{\text{SYSFREQ}}$$

$$\text{Trip Time} = \text{TL7}$$

   K is the time factor, Setting 1406: **TIME FAC**. Both forms of the equation (inverse and instantaneous) are calculated and the relay trips whenever either Trip Time has expired. Actual V/Hz is the voltage applied to any one phase divided by the frequency applied. INV PU and INST PU are Settings 1405: **INV PU** and 1407: **INST PU**, respectively. V_{NOM} is the nominal voltage, defined by Setting 114: **NOM VOLT** / x, where x = 1.732 or 1, depending on Setting 116: **VTCONN** (for WYE, x = 1.732; for DELTA, x = 1). SYSFREQ is Setting 102: **SYSFREQ**. If either of the above equations are satisfied, the test pickup relay will operate. If this condition persist for a time equal to the respective Trip Time, the test trip relay will operate.

3. Connect relay as shown in Figure 4–8: STANDARD FUNCTIONAL TEST CONNECTIONS on page 4–25.

4. Set up relay in test mode for the 24T function; **24T ON** will be displayed on the MMI.

5. Set all current inputs to 0. Set VA = 70 V rms ∠0°, VB = 70 V rms ∠–120°, and VC = 70 V rms ∠–240°. Change the voltage of any one phase until Voltage/Frequency is equal to: Inverse or Inst. V/Hz setting + 0.1 = _____. This will cause the test pickup relay to operate, and the test trip relay will operate after the appropriate Trip Time has expired. Change the voltage of any one phase until Voltage/Frequency is equal to: Inverse or Inst. V/Hz setting – 0.1 = _____. The test pickup and test trip relays will not operate.



NOTE

If this test is repeated, the operate time of the trip contact will change according to how soon the test is repeated. The trip time can be calculated according to the following equation:

$$\text{New Trip Time} = \frac{T}{\text{RESET}} \times \text{Original Trip Time}$$

where T = the time between successive tests, Original Trip Time = the 5.0 to 5.5 seconds it originally took to trip the relay, and RESET is Setting 1409. If the time between successive trips is greater than the RESET time, the relay will trip in the original trip time.

5.3.12 T15: POSITIVE-SEQUENCE OVERVOLTAGE 59

1. Record the following Settings:

   59

   (1503) **PICKUP** (Phase-Phase Voltage) =_____ V rms
   (1504) **TIME FAC** (Time Factor, *K*) = _____ sec.

2. Trip time is calculated using the following equation:

$$\text{Trip Time} = \frac{K}{(V_1/\text{PICKUP}) - 1}$$

   K is Setting 1504: **TIME FAC**, V_1 is the positive-sequence voltage applied phase-to-phase, and PICKUP is Setting 1503: **PICKUP**. If the value of V_1 is greater than **PICKUP**, the test pickup will operate. If the value of V_1 is greater than **PICKUP** for a time equal to Trip Time, the test trip relay will operate.

3. Connect relay as shown in Figure 4–8: STANDARD FUNCTIONAL TEST CONNECTIONS on page 4–25.
4. Set up relay in test mode for the 59 function; **59 ON** will be displayed on the MMI.
5. Set all current inputs to 0. Apply a signal to all three phases with a positive-sequence phase-phase voltage equal to **PICKUP** + 2 =_____ V rms. This will cause the test pickup to operate and the test trip will operate after the Trip Time has expired.
6. Lower the positive-sequence voltage to **PICKUP** – 2 =_____ V rms. This will prevent the test pickup and the test trip relays from operating.

5.3.13 T16: UNDERFREQUENCY UNIT #1 81-1U

1. Record the following Settings:

   81-1U

   (1703) **SET PNT** (Set Point for Min. Frequency)= _____ Hz
   (1704) **TL8** (Time Delay) = _____ sec.

2. Underfrequency is calculated with the following equation:

   Input Frequency < **SET PNT**

   Input Frequency is equal to the frequency in any phase. The unit should pick up when the above equation is true. The unit should trip **TL8** seconds after it has picked up.

3. Connect relay as shown in Figure 4–8: STANDARD FUNCTIONAL TEST CONNECTIONS on page 4–25.
4. Set up relay in test mode for the 81-1U function; **81-1U ON** will be displayed on the MMI.
5. Set all current inputs to 0. Set the voltage (rms) inputs to:

   VA = 70 V ∠0°
   VB = 70 V ∠–120°
   VC = 70 V ∠–240°

6. Set the frequency at **SET PNT** + 0.04 =_____ Hz. This will prevent the test pickup and the test trip from operating.
7. Change the frequency to **SET PNT** – 0.04 =_____ Hz. This will cause the test pickup relay to operate and the test trip relay will operate TL8 seconds later.

5.3.14 T17: OVERFREQUENCY UNIT #1 81-1O

1. Record the following Settings:

   81-1O

   (2103) **SET PNT** (Set Point for Maximum Frequency) = _____ Hz
   (2104) **TL15** (Time Delay) = _____ sec.

2. Overfrequency is calculated with the following equation:

   Input Frequency > **SET PNT**

   Input Frequency is equal to the frequency in any phase. The unit should pick up when the equation above is true. The unit should trip **TL15** seconds after it has picked up.

3. Connect relay as shown in Figure 4–8: STANDARD FUNCTIONAL TEST CONNECTIONS on page 4–25.
4. Set up relay in test mode for the 81-1O function; **81-1O ON** will be displayed on the MMI.
5. Set all current inputs to 0. Set the voltage (rms) inputs to:

   VA = 70 V ∠0°
   VB = 70 V ∠–120°
   VC = 70 V ∠–240°

6. Set the frequency at **SET PNT** – 0.04 =_____. This will prevent the test pickup and the test trip from operating.
7. Change the frequency to **SET PNT** + 0.04 =_____. This will cause the test pickup relay to operate and the test trip relay will operate **TL15** seconds later.

5.3.15 T18: VOLTAGE TRANSFORMER FUSE FAILURE VTFF

1. Record the following Settings:

   DIG INP

   (2501) **SELBKDI1** = NO BLK (0)

   VTFF

   (2601) **VTFF** = ENABLE (1)

2. Connect relay as shown in Figure 4–8: STANDARD FUNCTIONAL TEST CONNECTIONS on page 4–25.
3. Set up relay in test mode for the VTFF function; **VTFF ON** will be displayed on the MMI.
4. Set the current (rms) inputs to:

   IAS = 0.5A ∠90°
   IBS = 0.5A ∠–30°
   ICS = 0.5A ∠–150°

   Set the voltage (rms) inputs to:

   VA = 70V 0°
   VB = 70V ∠–120°
   VC = 70V ∠–240°

   Verify that neither the test pickup nor the test trip operates.

5. Decrease the voltage in all three phases to 49 V rms. Verify that test pickup operates and that test trip operates in 12.4 to 13.0 seconds.

5.3.16 T19: TOC GROUND OVERCURRENT 51GN

Skip this test if your model of DGP does not have this function. This function is not available on DGP*AAA models.**

NOTE

1. Record the following Settings:

   51GN

   (2803) **PICKUP** (Ground Current Pickup)= _____A
   (2804) **TIME FAC** (Time Factor, K) = _____ sec.

2. Time Overcurrent is calculated with the following equation:

$$\text{Trip Time} = \frac{K}{\sqrt{\text{Ground Current} / \text{PICKUP} - 1}}$$

   K is Setting 2804: **TIME FAC**. Ground Current is the current applied to neutral side (INR), and PICKUP is Setting 2803: **PICKUP**. If the value of Ground Current is greater than the **PICKUP** setting, the test pickup will operate. If the Ground Current is above the **PICKUP** setting for a time equal to Trip Time, the test trip relay will operate.

3. Connect as shown in Figure 4–6: GENERATOR DIFFERENTIAL TEST CONNECTIONS on page 4–18.
4. Set up relay in test mode for the 51GN function; **51GN ON** will be displayed on the MMI.
5. Set the current input to **PICKUP** + 0.1 (0.02) = _____ A rms.
6. Set the voltage (rms) inputs to:

   VA = 70 V ∠0°
   VB = 70 V ∠–120°
   VC = 70 V∠–240°

   The test pickup relay should operate immediately and the test trip relay should operate after the Trip Time has expired.

7. Lower the current to **PICKUP** – 0.1 (0.02) = _____ A rms and the test pickup and test trip relays should not operate.

5.3.17 T20: POSITIVE-SEQUENCE UNDERVOLTAGE 27

Skip this test if your model of DGP does not have this function. This function is not available on DGP*AAA models.**

NOTE

1. Record the following Settings:

   27

   (2903) **PICKUP** (Phase-Phase Voltage)= _____V rms
   (2904) **TIME FAC** (Time Factor, K) = _____ sec.
   (2905) **CURVE #** (Characteristic curve) = _____

2. Trip time for the function is calculated using equation (15):

$$\text{Trip Time} = \frac{K}{(\text{PICKUP} / V_1)} \quad \text{for } \textbf{CURVE \#} = 1$$

$$\text{Trip Time} = \frac{K}{(\text{PICKUP} / V_1)} \quad \text{for } \textbf{CURVE \#} = 2$$

K is Setting 2904: **TIME FAC**. V_1 is the positive-sequence voltage applied phase-to-phase, and PICKUP is Setting 2903: **PICKUP**. If the value of Phase Voltage is lower than **PICKUP**, the test pickup will operate. If the Phase Voltage is lower than **PICKUP** for a time equal to Trip Time, the test trip relay will operate.

3. Connect relay as shown in Figure 4–8: STANDARD FUNCTIONAL TEST CONNECTIONS on page 4–25.
4. Set up relay in test mode for the 27 function; **27 ON** will be displayed on the MMI.
5. Set all current inputs to 0.
6. Apply a signal to all three phases with a positive-sequence phase-phase voltage equal to **PICKUP** – 2 = _____. This will cause the test pickup to operate and the test trip will operate after the Trip Time has expired.
7. Raise the positive-sequence voltage to **PICKUP** + 2 = _____. This will prevent the test pickup and the test trip relays from operating.

5.4.1 ENDING PERIODIC TESTS

Make sure that the relay is no longer in test mode; select **END TEST MODE** from the test mode menu.

Print out or scroll through all of the settings. Compare them with the initial Settings of the relay, and change to initial values.

If the initial settings were saved to a disk file before testing using DGP-Link, download the file to the relay.



When testing is completed, verify that all settings are returned to your specified values. It is helpful to print out the settings and check them one by one.

6.1.1 DESCRIPTION

There are two possible servicing methods for the DGP system: spare module replacement and component level repair. The preferred method is module replacement using the DGP's automatic self-tests to isolate failed modules. When the defective module is found, it can be replaced with a spare, and the system can be returned to service. This method typically yields the shortest system down-time. To further reduce down-time, it is recommended that a complete set of spare modules be kept at the maintenance center.

It is not recommended that the relay be serviced at the component level. This requires a substantial investment in test/repair equipment and technical expertise, and usually results in longer down-times than module replacement. For those who do wish to trouble-shoot to the component level, drawings can be obtained by requesting them from the factory. When requesting drawings, the following information must be supplied to the factory:

1. The model number of the module. This is found on the lower part of the front nameplate of each module, e.g. MGM781
2. The assembly number of the module. This is found on the component side of the printed circuit board. It is an eight digit number with a letter inserted between the fourth and fifth digit and suffixed with a group identification, e.g. 0215B8012G001.
3. The revision number. This is found on the printed circuit board adjacent to the assembly number of the board.

CAUTION

Power down the relay by removing the test plugs or turn OFF the PS1 & PS2 switches before removing or inserting modules. Failure to do so can permanently damage the relay.

6.2.1 DESCRIPTION

The DGP automatically performs tests of major functions and critical hardware components and reports their status via the MMI display and the non-critical and critical alarm contacts. The failure report is dependent on the type or level of the failure. Some failures will operate the critical alarm contact and the status LED, while others will only operate the non-critical alarm contact.

There are three levels of self-test performed by the relay. The first level indicates severe relaying failures. They are indicated by a **FAIL** message on the MMI, a de-energizing of the critical alarm relay, and the status LED turning red. These failures are the most critical because they indicate that the relay is not providing protection.

The second level of self-test displays warning messages. They are indicated by a **WARN** message on the MMI, and energizing of the non-critical alarm relay. These failures are a less critical condition, where the relay is still providing some degree of protection.

The third level of tests indicate system status errors that are due to power system errors (Trip Circuit Open), or caused by a DGP command that disables the relay (Disable Outputs). They are indicated by the non-critical alarm relay being energized, a red LED, or by the critical alarm relay being de-energized. However, no MMI display is provided until the INFORMATION–STATUS command is used.

The types of self-tests performed are described in Section 1.4: OTHER FEATURES on page 1–18. The components tested during the start-up self-tests are listed in the table below. The components tested during run time background and foreground self-tests are listed in the next two tables, respectively.

Table 6–1: START-UP SELF-TESTS

COMPONENT	METHOD	PROCESSOR	NATURE
PROM	CRC-type check on DAP and SSP; checksum on DSP	All	Critical
Local RAM	Patterns to check for stuck bits, stuck address lines, cross-talk between adjacent bits	All	Critical
Shared RAM	Same as Local RAM	All	Critical
Non- volatile RAM	CRC-type check on settings area; CRC-type check on serial NVRAM in DAP; checksum on fault storage area	SSP, DAP	Critical if settings area or Serial NVRAM
Timer Chip	Test all processor timers and their interrupts	DAP, SSP	Critical if DAP, Non-Critical if SSP
Interrupt Chips	Test all processor and external Interrupt Controllers	DAP, SSP	Critical
Serial Chips	Wrap around and Interrupt tests for serial interface	SSP	Non-Critical
A/D Controller	DMA Interface	DAP	Critical, DGP will restart
Digital Output Circuitry	Loop-back via parallel port	SSP	Critical, DGP will restart
Real Time Clock	Test of real time clock Operation and Interrupts	SSP	Non-Critical
LED display	Self-test built in by manufacturer	SSP	Non-critical

Table 6–2: RUN-TIME BACKGROUND SELF-TESTS

COMPONENT	METHOD	PROCESSOR	NATURE
PROM	CRC-type check on DAP and SSP; checksum on DSP	All	Critical, Restart
RAM	CRC-type check on areas holding settings	All	Critical, Restart
Non- volatile RAM	CRC-type check on settings area; checksum on fault storage area	SSP	Critical if settings area
Timer Chip	Test that all timers are counting	DAP, SSP	Critical if DAP Non-Critical if SSP
Power Supply	Monitor Supply Health contact output	SSP	Critical if no backup supply

Table 6–3: RUN-TIME FOREGROUND SELF-TESTS

COMPONENT	METHOD	PROCESSOR	NATURE
A/D Controller	DMA Interface	DAP	Critical
Digital Input Circuitry	Comparison of bits read via 2 separate optocouplers	DAP, SSP	Non-Critical
Digital Output Circuitry	Loop-back via parallel port	SSP	Critical, Restart
Trip Voltage Monitor	Bit read via parallel port	SSP	Non-Critical
MMI	Operator-initiated, visual feedback	SSP	Non-Critical
DSP and DAP Communication	DSP finished flag	DAP	Critical
ANI	Current Summation Check	DSP	Critical
ANI	Ground and Reference range check	DAP	Critical
Power Supply	Range check +12V, _12V	DAP, SSP	Critical if no backup supply

6.3.1 DESCRIPTION

Troubleshooting the relay requires three steps.

1. Determine the type of failure. The type is either a critical, non-critical, or a system-status failure.
2. Use the list of failure codes, warning codes, or the INFORMATION–STATUS command to determine which module is defective.
3. Replace the defective module in accordance with safety and static-discharge precautions.

The troubleshooting sections are as follows:

- Servicing a Critical Failure **FAIL**
- Servicing a Non-Critical Failure **WARN**
- Servicing a System Status Failure



NOTE

Refer to Chapter 4: ACCEPTANCE TESTS for test of the MMI display, keypad, and printer port, and of the measuring units.

6.3.2 USING THE INFORMATION STATUS COMMAND

Tables 6–6: ERROR MESSAGES AT STARTUP and 6–7: ERROR MESSAGES AT RUNTIME have been provided as a listing of all the **FAIL** and **WARN** messages. They can be used to decode **FAIL *xxx*** and **WARN *xxx*** codes. A list of failure and warning codes is provided, but the INFORMATION–STATUS command can be used to extract the same data from the MMI display. The INFORMATION–STATUS command can be used locally at the relay site or remotely over a modem link.

The INFORMATION–STATUS command is invoked as follows:

6

1. Apply rated DC power to the relay and wait for initialization to complete.
2. Press the [INF] key. Then scroll with the arrow keys until the heading **INF: STATUS** is displayed. If you have a printer, press the [PRT] key.
3. Press the [ENT] key.

   The display will indicate that there is a failure with the words **STATUS: FAIL**.
4. Press the [↑] key to get a detailed report of the failure. A complete list of the possible errors is shown in the following tables:

   •Table 6–4: SYSTEM STATUS ERROR MESSAGES on page 6–6

   •Table 6–5: MISCELLANEOUS MESSAGES on page 6–6

   •Table 6–6: ERROR MESSAGES AT STARTUP on page 6–7

   The **FAIL** and **WARN** messages are also included. Their descriptions can also be displayed on the MMI, by using the INFORMATION–STATUS command.



NOTE

After initial power up or loss of power exceeding 24 hours, the time and date will reset to 00:00:00 01/01/90. All event and fault data will be reset

6.3.3 SERVICING A CRITICAL FAILURE FAIL

A critical failure indicates total interruption of the protection function. When an extended failure is detected on one of the modules (excluding the power supply) the critical alarm relay will drop out, and the MMI LED will turn red. Remove and re-apply the DC power to bring up the **FAIL** message on the display. If the DGP successfully restarts, the LED will turn green.

The FAIL message has the format **FAIL *xxx***. The ***xxx*** field represents the numeric code indicating the nature of the critical failure. The FAIL message remains on the display until a key is pressed or until the DGP restarts successfully (with no self-test failures).



NOTE

As an alternative, the INFORMATION–STATUS command can be used to display the failure type directly on the MMI.

A Failure message may appear in the Events or on the display, but not be displayed from INFORMATION–STATUS. This is the result of a Removable Critical Alarm, **REMCRIT**, shown in Section 6.4: ERROR CODES. This is caused by the DGP detecting a critical alarm, then later detecting that the condition has cleared up, and thus being able to restore protection.

LOCATING THE DEFECTIVE MODULE:

Use Tables 6–6: ERROR MESSAGES AT STARTUP, 6–7: ERROR MESSAGES AT RUNTIME, or the INFORMATION–STATUS command, to isolate the cause of the failure. When the suspected module is found, power down the unit and replace it. Re-apply power. If the **FAIL** message is gone, then the unit has been successfully repaired. If the message has changed, it is possible that another module requires replacement.

6.3.4 SERVICING A NON-CRITICAL FAILURE WARN

A non-critical failure indicates a possible interruption in the relay's protection, but not a total loss. When a **WARN** condition occurs, the DGP system's non-critical alarm contact will close. The LED will remain green. Turn off the DC input power, then re-apply. The **WARN *xxx*** message should appear if the failure still exists.

The **WARN** message has the format **WARN *xxx***. The ***xxx*** field represents the numeric code indicating the nature of the failure. The **WARN** message remains on the display until a key is pressed or until the DGP restarts successfully (with no self-test failures). See Table 6–6: ERROR MESSAGES AT STARTUP on page 6–7 for the list of Warning codes and their meanings.



NOTE

As an alternative to using the table of warnings, the INFORMATION–STATUS command can be used to display the warning type directly on the MMI.

A Failure message may appear in the Events or on the display, but not be displayed from "Information Status". This is the result of a Removable Non-Critical Alarm, **REMNONCRIT** in Table 6–7: ERROR MESSAGES AT RUNTIME on page 6–9. This is caused by the DGP detecting a non-critical alarm, then later detecting that the condition has cleared up, and thus being able to restore protection.

LOCATING THE DEFECTIVE MODULE:

Use Tables 6–6: ERROR MESSAGES AT STARTUP, 6–7: ERROR MESSAGES AT RUNTIME, or the INFORMATION–STATUS command to isolate the cause of the failure. Power down the unit and replace the suspected module if appropriate. Re-apply power and the **WARN** message should clear. If the **WARN** message is gone, then the unit has been successfully repaired. If the message has changed, it is possible that another module requires replacement.

6.3.5 SERVICING SYSTEM STATUS FAILURES

A system failure is one that indicates a failure of a power system input, or indicates that the relay has been disabled by a user command. They are indicated by the non-critical alarm contacts, by a red LED, or by the critical alarm contacts. However, no MMI display is provided until the INFORMATION–STATUS command is used.

Turn off then re-apply the DC input power. The non-critical alarm contact (N.O.) will be closed if the failure still exists. Use the INFORMATION–STATUS to determine the cause of the trouble.

Table 6–4: SYSTEM STATUS ERROR MESSAGES

SYSTEM STATUS ERROR	INDICATION	DESCRIPTION
WARN	NCA	WARN condition, press up arrow
FAIL	CA/LED	FAIL condition, press up arrow
MISC	LED	Miscellaneous condition, press up arrow

Note: LED = red LED on the MMI; NCA = energizing the non-critical alarm relay
CA = de-energizing the critical alarm relay.

Table 6–5: MISCELLANEOUS MESSAGES

MISCELLANEOUS MESSAGES	DESCRIPTION	INDICATION
PROT OFF	Protection off	LED
DIS OUTS	Outputs Disabled	LED
RELAY TEST	Relay in Test Mode	LED
D O TEST	Digital Output test	LED

Table 6–6: ERROR MESSAGES AT STARTUP (Sheet 1 of 2)

ERROR NUMBER	BOARD	ALARM	INF STATUS/DISPLAY	INF STATUS/PRINT
100	DAP	Critical	DAP:PROM	DAP BOARD:PROM
101	DAP	Critical	DAP:LOCAL RAM	DAP BOARD:LOCAL RAM
103	DAP	Critical	DAP:DSPRAM	DAP BOARD:DSPRAM
104	DAP	Critical	DAP:SYSRAM	DAP BOARD:SYSRAM
105	DAP	Critical	DAP:INTERRUPT	DAP BOARD:INTERUPT
106	DAP	Critical	DAP:TIMER	DAP BOARD:TIMER
124	DAP	Critical	DAP:VERSION NUM	DAP BOARD:VERSION NUMBER
207	DSP	Critical	DSP1:PROM	DSP BOARD1:PROM
208	DSP	Critical	DSP1:LOCAL RAM	DSP BOARD1:LOCAL RAM
209	DSP	Critical	DSP1:DSPRAM	DSP BOARD1:DSPRAM
210	DAP	Remcrit	DAP:NO DSP 1 RSP	DAP BOARD:NO DSP 1 RESPONSE
225	DSP	Critical	DSP1:VERSION NUM	DSP BOARD:DSP1 VERSION NUMBER
226	DSP	Critical	DSP2:PROM	DSP BOARD:DSP2 PROM
227	DSP	Critical	DSP2:LOCAL RAM	DSP BOARD:DSP2 LOCAL RAM
228	DSP	Critical	DSP2:DSPRAM	DSP BOARD:DSP2 DSPRAM
229	DAP	Remcrit	DAP:NO DSP 2 RSP	DAP BOARD:NO DSP 2 RESPONSE
230	DSP	Critical	DSP2:VERSION NUM	DSP BOARD:DSP2 VERSION NUMBER
231	DSP	Critical	DSP3:PROM	DSP BOARD:DSP3 PROM
232	DSP	Critical	DSP3:LOCAL RAM	DSP BOARD:DSP3 LOCAL RAM
233	DSP	Critical	DSP3:DSPRAM	DSP BOARD:DSP3 DSPRAM
234	DAP	Remcrit	DAP:NO DSP 3 RSP	DAP BOARD:NO DSP 3 RESPONSE
235	DSP	Critical	DSP3:VERSION NUM	DSP BOARD:DSP3 VERSION NUMBER
311	ANI	Critical	ANI:CONTROLLER	ANI BOARD:CONTROLLER
312	ANI	Critical	ANI:SERIAL MEMRY	ANI BOARD:SERIAL MEMORY
336	ANI	Critical	ANI:GROUND	ANI BOARD:GROUND FAILURE
414	MGM	Critical	MGM1:SERIAL MEM	MGM BOARD1:SERIAL MEMORY
422	MGM	Critical	MGM1:MODEL NUM	MGM BOARD1:MODEL NUMBER
449	MGM	Critical	MGM2:SERIAL MEM	MGM BOARD2:SERIAL MEMORY

Table 6–6: ERROR MESSAGES AT STARTUP (Sheet 2 of 2)

ERROR NUMBER	BOARD	ALARM	INF STATUS/DISPLAY	INF STATUS/PRINT
450	MGM	Critical	MGM2:MODEL NUM	MGM BOARD2:MODEL NUMBER
515	SSP	Critical	SSP:PROM	SSP BOARD:PROM
516	SSP	Critical	SSP:LOCAL RAM	SSP BOARD:LOCAL RAM
518	SSP	Critical	SSP:SYSRAM	SSP BOARD:SYSRAM
519	SSP	Critical	SSP:INTERRUPT	SSP BOARD:INTERRUPT
520	SSP	Remcrit	SSP:EEPROM	SSP BOARD:EEPROM
523	SSP	Critical	SSP:VERSION NUM	SSP BOARD:VERSION NUMBER
553	SSP	Critical	SSP: SET RANGE	SSP BOARD SETTING RANGE
556	SSP	Noncrit	SSP:TIMER	SSP BOARD:TIMER
557	SSP	Noncrit	SSP:CAPRAM	SSP BOARD:CAPRAM
558	SSP	Noncrit	SSP:CLOCK	SSP BOARD:REAL TIME CLOCK
621	MMI	Critical	MMI:DIG OUT	MMI BOARD:DIGITAL OUTPUT
655	MMI	Noncrit	MMI:SERIAL CHP 1	MMI BOARD:SERIAL CHIP #1
659	MMI	Noncrit	MMI:LED DISPLAY	MMI BOARD:LED DISPLAY
663	MMI	Noncrit	MMI:SERIAL CHP 2	MMI BOARD:SERIAL CHIP #2
664	MMI	Noncrit	MMI:SERIAL CHP 3	MMI BOARD:SERIAL CHIP #3

Table 6–7: ERROR MESSAGES AT RUNTIME (Sheet 1 of 2)

ERROR NUMBER	BOARD	ALARM	INF STATUS/DISPLAY	INF STATUS/PRINT
60	MISC	Noncrit	LOGON FAILURE	LOGON FAILURE
71	MISC	Noncrit	CASE GND SHORTED	CASE TO GND SHORTED
100	DAP	Crit+Wdreset	DAP:PROM	DAP BOARD:PROM
102	DAP	Crit+Wdreset	DAP:DSPRAM	DAP BOARD:DSPRAM
106	DAP	Crit+Wdreset	DAP:TIMER	DAP BOARD:TIMER
207	DSP	Remcrit	DSP1:PROM	DSP BOARD1:PROM
209	DSP	Remcrit	DSP1:DSPRAM	DSP BOARD1:DSPRAM
210	DAP	Remcrit	DAP:NO DSP 1 RSP	DAP BOARD:NO DSP 1 RESPONSE
226	DSP	Remcrit	DSP2:PROM	DSP BOARD2:PROM
228	DSP	Remcrit	DSP2:DSPRAM	DSP BOARD2:DSPRAM
229	DAP	Remcrit	DAP:NO DSP 2 RSP	DAP BOARD:NO DSP 2 RESPONSE
231	DSP	Remcrit	DSP3:PROM	DSP BOARD3:PROM
233	DSP	Remcrit	DSP3:DSPRAM	DSP BOARD3:DSPRAM
234	DAP	Remcrit	DAP:NO DSP 3 RSP	DAP BOARD:NO DSP 3 RESPONSE
246	DSP	Remcrit	DSP1:SET CHKSUM	DSP BOARD1:SETTING VERSION
247	DSP	Remcrit	DSP2:SET CHKSUM	DSP BOARD2:SETTING VERSION
248	DSP	Remcrit	DSP3:SET CHKSUM	DSP BOARD3:SETTING VERSION
313	ANI	Remcrit	ANI:REFERENCE	ANI BOARD:REFERENCE
336	ANI	Remcrit	ANI:GROUND	ANI BOARD:GROUND FAILURE
351	ANI	Remcrit	ANI:CURRENT SUM	ANI BOARD:CURRENT SUM FAILURE
352	ANI	Crit+Wdreset	ANI:CHAN SATURAT	ANI BOARD:CHANNEL SATURATED
373	ANI	Remnoncrit	_	ANI BOARD: SAMPLE CORRECTED
515	SSP	Crit+Wdreset	SSP:PROM	SSP BOARD:PROM
517	SSP	Crit+Wdreset	SSP:SYSRAM CRC	SSP BOARD:SYSRAM CRC
520	SSP	Noncrit	SSP:EEPROM	SSP BOARD:EEPROM
556	SSP	Noncrit	SSP:TIMER	SSP BOARD:TIMER
557	SSP	Noncrit	SSP:CAPRAM	SSP BOARD:CAPRAM
621	MMI	Crit+Wdreset	MMI:DIG OUT	MMI BOARD:DIGITAL OUTPUT
737	PS	Remcrit	PS1 + 2: SELFTEST	POWER SUPPLY 1 & 2: FAILURE SELFTEST

Table 6–7: ERROR MESSAGES AT RUNTIME (Sheet 2 of 2)

ERROR NUMBER	BOARD	ALARM	INF STATUS/DISPLAY	INF STATUS/PRINT
738	PS	Remcrit	PS1+2:+12V BAD	POWER SUPPLY 1 AND 2:(FAIL) +12V BAD
739	PS	Remcrit	PS1+2:_12V BAD	POWER SUPPLY 1 AND 2:(FAIL) _12V BAD
740	PS	Remcrit	PS1 + 2: SELFTEST	POWER SUPPLY 1 & 2: FAILURE SELFTEST
741	PS	Remcrit	PS1+2:+12V BAD	POWER SUPPLY 1 AND 2:(FAIL) +12V BAD
742	PS	Remcrit	PS1+2:_12V BAD	POWER SUPPLY 1 AND 2:(FAIL) _12V BAD
743	PS	Remcrit	PS:SELFTEST	POWER SUPPLY:(FAILURE) SELFTEST
744	PS	Remcrit	PS:+12V BAD	POWER SUPPLY:(FAILURE) +12V BAD
745	PS	Remcrit	PS:_12V BAD	POWER SUPPLY:(FAILURE) _12V BAD
765	PS	Remnoncrit	PS1:SELFTEST	POWER SUPPLY 1:(WARNING SELFTEST)
766	PS	Remnoncrit	PS1:+12V BAD	POWER SUPPLY 1:(WARNING) +12V BAD
767	PS	Remnoncrit	PS1:_12V BAD	POWER SUPPLY 1:(WARNING) _12V BAD
768	PS	Remnoncrit	PS2:SELFTEST	POWER SUPPLY 2:(WARNING SELFTEST)
769	PS	Remnoncrit	PS2:+12V BAD	POWER SUPPLY 2:(WARNING) +12V BAD
770	PS	Remnoncrit	PS2:_12V BAD	POWER SUPPLY 2:(WARNING) _12V BAD
972	DIT	Noncrit	DIT:DIG INP	DIT BOARD:DIGITAL INPUT

ELECTRICAL RATINGS

Nominal Frequency: 50 to 60 Hz

Nominal Voltage: 140 V AC (phase-to-phase)

Rated Current I_n: 1 A or 5 A

DC Control Voltage, operating range:

48 V DC	38.5 to 60 V DC
110/125 V DC	88 to 150 V DC
220/250 V DC	176 to 300 V DC

Maximum Permissible AC voltage:

Continuous	2 x rated
1 minute (one per hr.)	3.5 x rated

Maximum Permissible current:

Continuous	2 x I_n
3 seconds	50 x I_n
1 second	100 x I_n

Insulation Test Voltage: 2 kV @ 50/60 Hz, one minute
2.8 kV DC, one minute

Impulse Voltage Withstand Fast Transient:
5 kV peak, 1.2/50 μs, 0.5 J

Radio Frequency Interference Withstand:
SWC, per ANSI C37.90.1

Vibration Test Withstand: IEC 255-21-1

Humidity: 95% without condensation

Ambient Temperature Range

Storage:	–30°C to 70°C
Operation:	–20°C to 55°C

BURDEN RATINGS

Current Circuit: I_n = 1 A: 0.12 Ω, 30°
I_n = 5 A: 0.022 Ω,5°

Voltage Circuit: 0.30 VA @ 60 Hz
0.40 VA @ 50 Hz

DC Battery
(contact converters): 1.0 mA at 48 V DC
1.5 mA at 125 V DC
2.5 mA at 250 V DC
(power supply): 19 W with one supply
25 W with two supplies

INTERFACE DATA

System Interface: RS232 port – rear panel
RS232 port – front panel
Printer interface (serial) *optional*
IRIG-B (demodulated) *optional*

The printer interface and IRIG-B are optional functions.

CONTACT DATA

Trip Outputs: Four Programmable Relays with two Form A contacts each.
Continuous Rating: 3 A
Make and Carry: 30 A (per ANSI C 37.90)
Break 60 VA inductive, max. 250 V or 0.5 A
Leakage Current: 2.36 mA (average)

Alarm Outputs: Four Programmable Relays with one Form C contact each.
One critical self-test alarm
One non-critical self-test alarm
One VT Fuse Failure alarm
One power supply alarm per power supply

Auxiliary Contacts (including Alarms):
Continuous Rating: 3 A
Make and Carry: 5 A for 30 seconds
Break 60 VA inductive, max. 250 V or 0.5 A

Trip Circuit Monitor Sensitivity:
150 mA

Trip Voltage Monitor: 30 to 300 V DC

Digital Inputs: 30 to 300 V DC
1 to 3 mA

ACCURACY

RMS measurements: ±3% of reading

Phase Angle measurements:
±1°

Frequency measurements:
±0.01 Hz

Timers: ±3% of setting or 10 to 40 ms, whichever is greater

Data Sample Time Tag Resolution:
±1 msec.

DIMENSIONS AND WEIGHT

Height: 14 inches, 352 mm
standard 8-rack unit

Width: 19.0 inches, 484 mm
standard 19-inch rack

Depth: 14 inches, 356 mm

Weight: 51 pounds, 23 kg

SPECIFICATONS ARE SUBJECT TO CHANGE WITHOUT NOTICE

7.1.2 PROTECTION FUNCTIONS AND SETTING RANGES

FUNCTION	SETTING	RANGE		STEP
		5 A	1 A	
Differential (87G)	Differential Current Pickup	0.20 to 1.00 A	0.04 to 0.20 A	0.01
Current Unbalance (46)	Negative Sequence Current	0.05 to 2.99 A	0.01 to 0.60 A	0.01
	Machine Constant - K2	1.0 to 45.0		0.1
Loss of Excitation (40) (Two Independent Zones)	Zone 1 & Zone 2 Center	2.5 to 60 Ω	12.5 to 300 Ω	0.01
	Zone 1 & Zone 2 Radius	2.5 to 60 Ω	12.5 to 300 Ω	0.01
	Zone 1 & Zone 2 Timer	0.01 to 9.99 sec.		0.01
Anti-Motoring (32) (Two Independent Steps) ①	Reverse Power	0.5 to 99.9 W	0.1 to 19.9 W	0.1
	Time Delay (step 1)	1 to 120 sec.		1
	Time Delay (step 2) ①	1 to 60 sec.		1
Stator Ground (64G1) (Fundamental frequency)	Zone 1 Neutral OV Pickup	4.0 to 40.0 V		0.1
	Zone 1 Timer	0.1 to 9.9 sec.		0.1
Stator Ground (64G2) (3rd Harmonic comparator) ①	Zone 2 Timer	0.1 to 9.9 sec.		0.1
Stator Ground (27TN) (Third Harmonic UV)	Voltage Pickup	0.1 to 9.9 V		0.1
	Time Delay	0.5 to 99.9 sec.		0.1
	Forward Power Limit - Low	0 to 999 W	0 to 200 W	1
	Forward Power Limit - High	0 to 999 W	0 to 200 W	1
Overexcitation (24)	V/Hz Pickup (Inverse)	1.00 to 1.99 per unit		0.01
	Time Factor (Inverse)	0.10 to 99.99 sec.		0.01
	V/Hz Pickup (Instantaneous)	1.00 to 1.99 per unit		0.01
	Timer (Instantaneous)	0 to 9.9 sec.		0.1
	Rate of Reset Timer	0 to 999 sec.		1
Overvoltage (59)	Voltage Pickup (Inverse)	100 to 200 V ③		1
	Time Factor	0.10 to 99.99 sec.		0.01
	Voltage Pickup (Instantaneous) ①	100 to 300 V ③		1
Over/Underfrequency (81) (2 or 4 Independent Steps) ①	Set Point (Under)	40.00 to 65.00 Hz		0.1
	Set Point (Over)	45.00 to 79.99 Hz		0.1
	Timer (Each Step)	0.05 to 99.99 sec. ②		0.01
System Backup (51V)	Phase Time OC Pickup	0.5 to 16 A	0.1 to 3.2 A	0.1
	Time Factor	0.10 to 99.99 sec		0.01
Ground Overcurrent (51GN) ①	Ground Time OC Pickup	0.10 to 5.00 A	0.02 to 1.00 A	0.01
	Time Factor	0.1 to 99.99 sec.		0.01
Undervoltage (27) ①	Voltage Pickup	40 to 120 volt ③		1
	Time Factor	0.10 to 99.99 sec.		0.01

① Indicates an optional function. Refer to the DGP selection guide for available functions in a specific model.
② Timer range for Under Frequency Step 1 is 0.1 to 999.9 sec.
③ Wider range available in DGP***ACA models; refer to Table 2–1 for detail.

8.1.1 DESCRIPTION

The display consists of 16 LED alphanumeric character positions arranged side-by-side horizontally. There are also 19 Target LEDs and 1 Status LED.

All messages on the display are the result of some keypad action, with four exceptions:

- the Trip message when the DGP has caused a protective trip,
- the Fail message when the DGP has discovered a critical self-test failure,
- the Warning message when the DGP has discovered a non-critical self-test failure,
- the Initialization message when the DGP is initializing during a power up.

All messages other than the Trip message are displayed at the same intensity, about half of full-intensity. User input for setting changes is echoed at a lower intensity to help distinguish the stored setting value from one that has not yet been entered into the DGP system.

The Trip message is displayed at highest intensity and has the following format: **TRIP *xxx xxx***. The word **TRIP** blinks to indicate that the DGP system has caused a protective trip. The two fields of information following the word **TRIP** are non-blinking and contain the following information: a three-character fault type (e.g. ABC) and a three-character trip type (see Section 8.3.10: INFORMATION KEY [INF] on page 8–12 for a list of the trip types). The message will remain on the display permanently until removed by a keyboard operation. If the DGP restarts or is powered down and up, the trip indicator is remembered and redisplayed. As soon as any key is pressed, the Trip message is removed and no longer remembered.

The Fail message has the format **FAIL *xxx***. The field following the word **FAIL** is a numeric code that indicates the nature of the critical self-test failure. The Fail message remains on the display until a key is pressed or until the DGP system restarts successfully (with no self-test failures). A list of the failure numbers and their meanings can be found in Section 6.4: ERROR CODES on page 6–7.

The Warning message has the format **WARN xxx**. The field following the word **WARN** is a numeric code that indicates the nature of the non-critical self-test failure. The Warning message remains on the display until the a key is pressed or until the DGP system restarts successfully (with no self-test failures). A list of the warning numbers and their meanings can be found in Section 6.4: ERROR CODES on page 6–7.

The Initialization message has the format **INITIALIZING** and is displayed while the DGP system is initializing itself during a power-up sequence. The display is blanked as soon as initialization is complete.

All other messages that are the result of keypad operations remain on the display until another key is pressed, or until no keys have been pressed for a period of 15 minutes. At the end of this time-out interval, the display is blanked. The time-out interval is set to 10 seconds when the [END] and [ENT] keys are pressed successively; at the end of this time-out interval, the display is blanked. Time-out also causes the MMI access privilege to be set at View Level.

8.2.1 TARGET LEDs

There are 18 LEDs that indicate all of the protection functions that operated during a fault. The Target LEDs display the information for the TRIP message that is currently on the display.

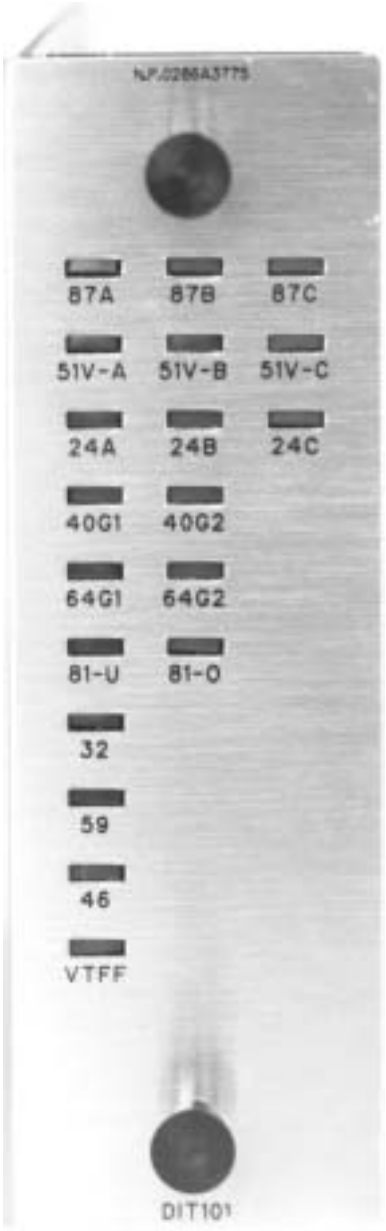

Figure 8–1: TARGET LEDS

8.2.2 TARGET RESET KEY

The Target Reset Key is the [CLR] key on the keypad. Operation of the [CLR] key is explained in the section below.

8.3.1 DESCRIPTION

The MMI keypad is an interface method on the DGP system. The keypad is comprised of twenty keys. See the figure below for details on keypad layout.



Figure 8–2: MMI KEYPAD

8.3.2 CLEAR KEY [CLR]

The [CLR] key is used to abort a keyboard sequence in progress (for example, when the user needs to correct an error). When the [CLR] key is pressed, all or part of the display is blanked. If there is user-entered information on the display, only that information will be blanked. For example, if the user is entering a Setting value when the [CLR] key is pressed, only the user's input will be blanked; the name of the setting remains on the display. As another example, if the user is responding to an Action prompt, only the user's input will be blanked; the prompt question remains on the display. If there is no user-entered information on the display, the entire display is blanked and the DGP expects a command key to be pressed.

If a Trip, Fail, or Warn message is being displayed, the user must press the [CLR] key to blank the error message (all other keys will be ignored). When the error message is blanked, the last message will be displayed, allowing the user to re-enter the correct response.

Fault data is displayed by pressing the [CLR] key while a **TRIP** message is displayed. Only target information (**TRIP** messages) and the time of the trips for the accumulated faults are displayed. Pressing [CLR] while the current **TRIP** message is displayed shows its time of occurrence. Pressing [CLR] again shows the date. Pressing [CLR] one more time shows target information for the previous fault. This continues until all the accumulated fault information is displayed. At this point the display becomes blank. **TRIP** messages for the recorded faults are displayed in normal intensity and non-blinking; the latest **TRIP** message is displayed blinking with high intensity. The target LEDs display the protection functions that operated for the current **TRIP** message.

Present values scrolling is activated by pressing the [CLR] key when the display is blank (items displayed are described later under [INF] command key processing). Each item is displayed four seconds before proceeding to the next item. After scrolling through all of the items, the display is blanked.

Both the fault data display and the present value display are stopped by a **TRIP** or a keypress.

8.3.3 PRINT KEY [PRT]



NOTE

Printer output is not active in some DGP models (see the model selection guide).

For applicable DGP models, the [PRT] key is used to direct information to the printer instead of to the display. When information is sent to the display, only one item at a time is displayed. When information is sent to the printer, all items within a category (or, in the case of settings, all settings) are printed. When the [PRT] key is pressed, the characters **PRT** are displayed.

8.3.4 ARROW KEYS

The arrow keys are used to scroll through the list of categories within a Command ([SET], [INF], [ACT]) key or to scroll through the list of items within a category. For example, pressing the [INF] key displays the name of the first category (e.g., **STATUS**). Pressing the [↑] key next displays the name of the second category (e.g., **FAULT**). When the desired category is reached, pressing the [ENT] key displays the first item of that category. From that point on, pressing the [↑] key will display each subsequent item in the category.

While the [↑] key scrolls in a forward direction through a list of categories or items, the [↓] key scrolls backward through a list. That is, the user may return to the previously displayed item by pressing the [↓] key.

If the user is scrolling through items within a category and wants to exit that category, pressing a command key ([SET], [INF], [ACT]) will display the current category name. The arrow keys can then be used to scroll through the categories.

8.3.5 ENTER KEY [ENT]

The [ENT] key is used to enter data or a choice. It is also used in conjunction with the [END] key to confirm a setting change to be stored into non-volatile memory (see the [END] key description below).

8.3.6 DATA ENTRY KEYS

The data entry keys consist of the numeric keys and the decimal point. These keys are used to enter data into the DGP or to make choices in response to prompts. The numeric keys [1/Y] and [3/N] have two meanings:

- If entering numeric values, the [1/Y] and [3/N] keys are processed and displayed as 1 and 3.
- If responding to a YES/NO prompt, the [1/Y] key is processed and displayed as **YES** and the [3/N] key is processed and displayed as **NO**.

8.3.7 END KEY [END]

The [END] key causes two actions:

- It is used to indicate that no more setting changes will be made.
- It is used to end a session. That is, when the user presses the [END] key, the MMI becomes idle (without the 15 minute time-out) and remote communication actions and settings are enabled if previously locked by the MMI.

The key sequence for indicating the end of setting changes and/or the end of a session is: [END] [ENT]

When the user presses the [END] key, the display shows **HIT ENT TO END**. When the user follows with the [ENT] key, the display shows **ENDED**.

1. If no setting values have been entered, the DGP takes no action in response to the [END]/[ENT] key sequence other than to enable action items locked previously by the MMI, to allow action commands from remote communications to be executed.
2. If the Digital Output Test was activated from the MMI, the [END]/[ENT] key sequence will deactivate the test and turn protection on. This will also set the MMI Privilege Level to View Level.
3. If settings are changed, the [END]/[ENT] key sequence causes the DGP to re-initialize itself with the new settings and the event **SETTING CHANGE DONE** is logged in the sequence of events. The DGP then checks whether or not outputs have been disabled by the user. If outputs have been disabled, the status LED remains red; if outputs are enabled, and there are no critical self-test failures, the LED turns green. The DGP protection software re-initializes itself to use the new setting values. The displayed message changes to **ENDED**. The MMI unlocks the settings lock to allow remote communication to display and change settings from the DGP system.

   The **ENDED** message is blanked from the display when another key is pressed or after a 10 second delay. In the latter case, the display remains blank until another key is pressed.

8.3.8 SETTINGS KEY [SET]

The [SET] key is used to display or change settings. See Table 2–1: DGP SYSTEM SETTINGS & RATINGS on page 2–3 for a complete list of settings. The figure below shows the [SET] key menu structure.

The user may scroll through all the settings in a category using the arrow keys. Press the [SET] key will cause the current category name to be displayed. The user may go to another category by using an arrow key or enter a setting number, followed by the [ENT] key, to go to another setting.

To change a setting, the setting must first be displayed as shown above. The data entry keys are then used to enter a new value. When the first data entry key is pressed, the abbreviated name remains on the display but the value is blanked and a blinking colon (**:**) appears in place of the equals sign (**=**). Each data entry key is displayed as it is pressed, in a lower intensity, and the colon (**:**) continues to blink. There are some settings that logically represent a state rather than a number (i.e., YES/NO). For these settings, the [1/Y] and [3/N] keys are used to indicate the state ([1/Y] = YES and [3/N] = NO) and the words **YES** or **NO** are displayed. After the last digit is entered and the [ENT] key pressed, the blinking colon (**:**) is replaced by an equals sign (**=**), the value is displayed at normal intensity, and the DGP stores the new value. If the [PRT] key, [CLR] key, arrow keys, or any command key is pressed instead of [ENT], the new value is not stored and the old value retained.



It is important to note that as soon as any value is entered, the DGP system does not stop its protection activities. Settings are stored in a temporary buffer until the user presses the [END] [ENT] key sequence. This causes a transfer of settings from the buffer to EEPROM and re-initialization of protection. If the [END] [ENT] sequence is not performed and the DGP is allowed to time out, all of the settings in temporary storage will be lost.

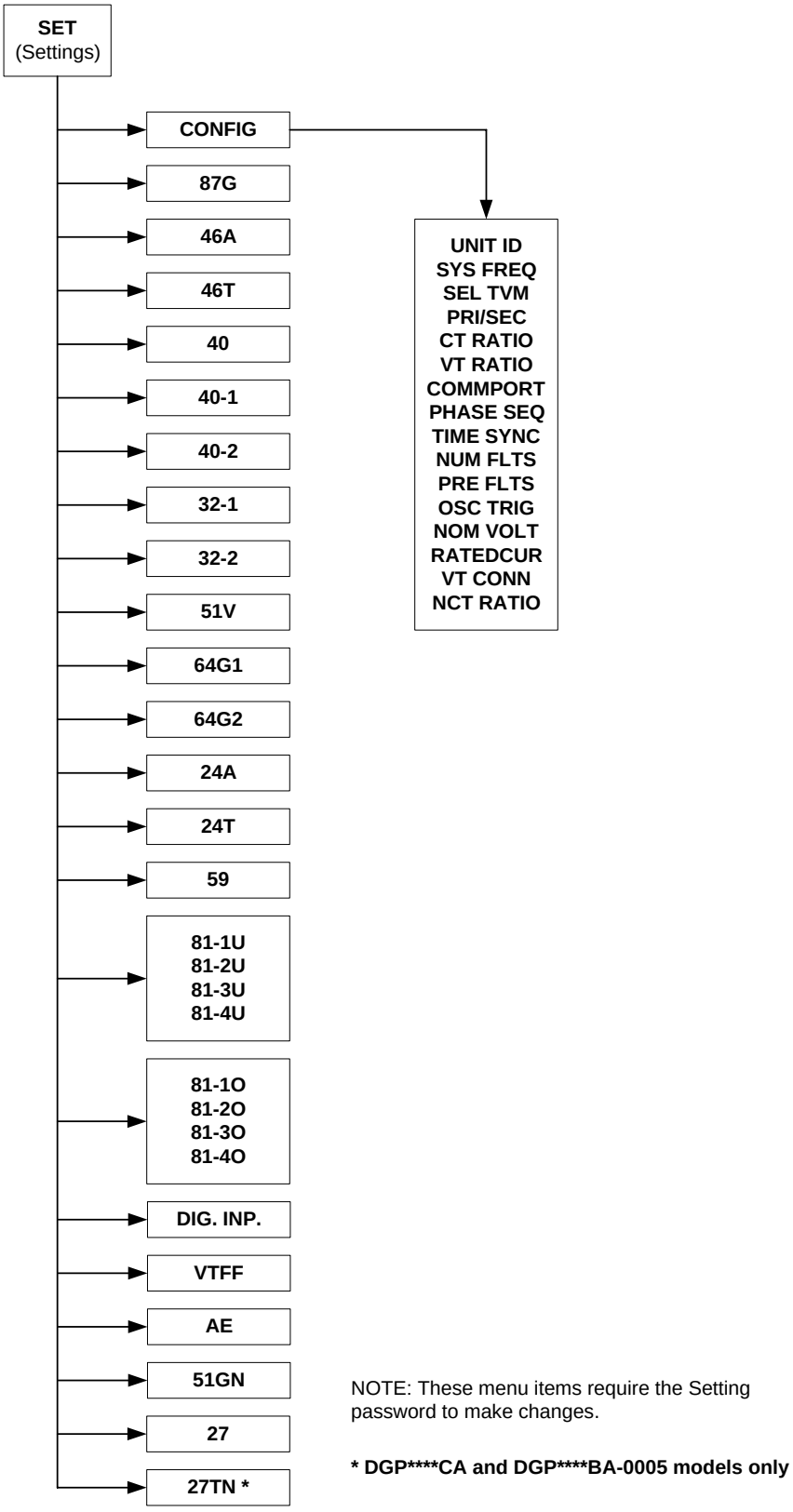

NOTE: These menu items require the Setting password to make changes.

*** DGP****CA and DGP****BA-0005 models only**

Figure 8–3: [SET] KEY MENU STRUCTURE

8.3.9 ACTIONS KEY [ACT]

The [ACT] key is used to perform actions. The action categories can be scrolled through using the arrow keys. The 11 possible actions are listed below. The names of the actions displayed are in parentheses. For convenience, each category has also been assigned a number so that the action can be accessed directly. The key sequence for selecting an actions is: [ACT] *n* [ENT], where *n* is the action category shown below:

n =	1: Disable Outputs	(DISABLE)
	2: Enable Outputs	(ENABLE)
	3: Trip	(TRIP)
	4: Reset	(RESET)
	5: Enter Date and Time	(DATE/TIME)
	6: Relay Test	(RELAY TEST)
	7: MMI Test	(MMI TEST)
	8: Fix Up Settings CRC	(COMPUTE CRC)
	9: Enter Password	(ENTER PASSWORD)
	10: Change Password	(CHANGE PASSWORD)
	11: Digital Output Test	(DIG OUTPUT TEST)

Note that *n* is optional; if omitted, action category 1 is assumed. When the user presses the [ENT] key following the displayed action category name, the first item or prompt in that category is displayed. If the category contains a list of items, the user may scroll through the items with the arrow keys. Figure 8–4: [ACT] KEY MENU STRUCTURE on page 8–11 shows the menu structure of the [ACT] key.

1. DISABLE OUTPUTS

This category is used to inhibit the DGP from energizing any of the Digital Output channels. This includes the four Trip outputs, the four Alarm outputs, and the VTFF output. After the [ENT] key is pressed, the display prompts with the message **DIS OUTPUTS?**. The user presses the [3/N] key for **NO** or [1/Y] for **YES** followed by the [ENT] key. If the user responds **NO**, the message **CANCELLED** is displayed and no DGP action occurs. If the user responds **YES**, the action is performed and the message **OUTPUTS DISABLED** is displayed, the status LED turns red, and the event LOCAL - DISABLE OUTPUTS is logged in the sequence of events.

2. ENABLE OUTPUTS

This category permits the DGP to energize all the Digital Output channels. After the [ENT] key is pressed, the display prompts with the message **EN OUTPUTS?**. The user presses [3/N] for **NO** or [1/Y] for **YES** followed by the [ENT] key. If the user responds with **NO**, the message **CANCELLED** is displayed and no DGP action occurs. If the user responds with **YES**, the action is performed, the message **OUTPUTS ENABLED** is displayed, the status LED turns green, and the event LOCAL - ENABLE OUTPUTS is logged.

3. TRIP

This category is used to manually operate any one of the four trip output relays.

When the [ENT] key is pressed, the display prompts with the message **WHICH RLY?**. The number of the desired Trip output is entered and the [ENT] key pressed. The number for each Trip contact is shown in the following table:

Input #	Trip Contact
0	94G
1	94G1
2	94G2
3	94G3

The display then prompts with the message **TRIP *xxxx*?** (where ***xxxx*** is the name of the Trip Contact). The user presses [3/N] for **NO** or [1/Y] for **YES** followed by the [ENT] key. If the user responds **NO**, the message **CANCELLED** is displayed and no DGP action occurs. If the user responds **YES**, then the action is performed, the message ***xxxx* TRIPPED** appears on the display, and the event LOCAL - MANUAL TRIP is logged.

4. RESET

This category is used to delete various pieces of information stored in the DGP memory. The following information can be cleared.

FAULT REPORTS

SEQUENCE OF EVENTS

When the [ENT] key is pressed, the DGP prompts with the message **RST WHAT?**. The user enters **0** to delete FAULT REPORTS or **1** to delete SEQUENCE OF EVENTS followed by the [ENT] key. The display then prompts with **RST FLT RPT?** or **RST SOE?**. The user presses [3/N] for **NO** or [1/Y] for **YES** followed by the [ENT] key. If the user responds **NO**, the message **CANCELLED** is displayed and no DGP action occurs. If the user responds **YES**, the action is performed and the message **FLT RPT RESET** or **SOE RESET** is displayed.

5. DATE/TIME

This category is used to display or change the current date and/or time stored in the DGP. When the [ENT] key is pressed, the display shows **DATE: mm/dd/yy**. To change the date, enter 6 digits from the numeric keypad corresponding to mm/dd/yy an press the [ENT] key. If the user presses any key other than [ENT], or the digits do not comprise a valid date, the old date is retained and an error message appears.



NOTE

After initial power up or loss of power exceeding 24 hours, the time and date will reset to 00:00:00 01/01/90. All event and fault data will be reset.

If the [↑] key is pressed after viewing or changing the date, **TIME: hh:mm:ss** is displayed. To change the time, enter 6 digits followed by the [ENT] key. If the user presses any key other than [ENT], or the digits entered do not comprise a valid time, the old time is retained and an error message displayed.

6. RELAY TEST

This category tests the relay functions of the DGP system. If the [ENT] key is pressed and the DGP is already in Test Mode, the current Test Mode selection is displayed. When not in Test Mode, the first item, **END TEST MODE**, is displayed. The user may then select or cancel a test by using the [↑] and [↓] keys followed by the [ENT] key. The displayed test is selected for execution by pressing the [ENT] key. When the test is selected, the word **ON** will be displayed and the pickup of the selected function will result in the output of the DOR12 contact. The trip of the selected function will result in the output of the DOR13 contact. The user will be able to monitor only one function at a time. That is, if a user selects a function to monitor, any previously selected function will no longer be monitored. Each test function may be selected by scrolling through the menu or entering the test number and pressing [ENT].

To remove the DGP from test mode, the user can either press the arrow keys until **END TEST MODE** is displayed, then press the [ENT] key, or press the [1/Y] key followed by the [ENT] key twice. In either case, the currently selected function will stop being monitored.

7. MMI TEST

This selection is used to test the display, keyboard, status LED, target LEDs, and printer. If the [ENT] key is pressed, the entire left 8-character display is lit, enabling the user to verify that all the LED segments are working. The right 8-character display prompts with **NEXT?**. If the user presses [3/N] followed by [ENT], the next test (testing the right 8-character display) is skipped. If the user presses [1/Y] followed by [ENT], the right 8-character display is lit, enabling the user to verify that all the LED segments are working.

The left 8-character display then prompts with **LED TST?**. If the user presses [3/N] followed by [ENT], the LED test is skipped. If the user presses [1/Y] followed by [ENT], the LEDs will be tested. If the green LED is on, it will be extinguished and the red LED lit. If the red LED is lit, it will be extinguished and the green LED lit. The target LEDs will flash on/off 4 times and then each will be lit individually. When the test is over, the Target LEDs will be returned to their original state.

The display then prompts with **KEYBRD TEST?**. If the user presses [3/N] followed by [ENT], the keyboard test is skipped. If the user presses [1/Y] followed by [ENT], the keyboard test is initiated. First the display is blanked and the user is expected to press keys on the keyboard. The key mnemonics are echoed on the display, verifying that each key is being sensed correctly. The [CLR] key terminates the keyboard test.

When the keyboard test is complete (or the user has skipped the keyboard test), the display prompts with **PRINTER TEST?**. If the user presses [3/N] followed by [ENT], the printer test is skipped and the MMI test terminated. If the user presses [1/Y] followed by [ENT], the printer is tested for the applicable DGP models. Patterns containing all printable characters would are printed in all possible columns.

8. FIX UP SETTINGS CRC

This category recalculates the CRC (cyclic redundancy check) of the settings in non-volatile memory. This category is used after the DGP has reported an EEPROM failure, indicating that the stored settings do not match their CRC code. **When using this command, it is imperative that the user EXAMINE EVERY SETTING IN THE DGP SYSTEM to assure that each setting is still correct, before performing the [END]/[ENT] key sequence to resume Protection.**

After the [ENT] key is pressed, the display prompts with the message **RECALC CRC?**. If the user presses the [3/N] key, the message **CANCELLED** is displayed and no action is taken. If the user presses the [1/Y] key, two checks are performed: 1) privilege level must be Setting or Control level, and 2) Communication must not be in the process of changing settings. If the checks fail, an error message is displayed and the action is not performed. If the checks pass, then the Setting's CRC code is recalculated, the message **CHECK SETTINGS** is displayed, and the LOCAL – SETTINGS CHANGE DONE event is logged in the sequence of events.

Once the Setting's CRC code has been calculated and *EVERY DGP SETTING HAS BEEN EXAMINED*, the [END] [ENT] key sequence is entered to resume Protection.

9. ENTER PASSWORD

This category is used to enter the MMI password that activates one of the two areas of input:

- The first area of input allows the user to change settings (Settings Level).
- The second area of input allows the user to access control actions (Control Level).

The privilege level reverts back to View Level when the MMI becomes idle, either by using the [END] key or if the MMI times out (15 minutes). When the privilege level is View, values can be viewed but not changed.

After the [ENT] key is pressed, the display prompts the user with the message **ENTER PASSWORD**. The user responds by pressing the digit keys representing the password. The digits are echoed with an asterisk (*****). The user then presses the [ENT] key, which displays **SELECTED** if the password was valid or **REQUEST INVALID** if it was not. MMI privilege is set to the level associated with the selected password.

10. CHANGE PASSWORD

This category is used to change the password currently in effect. A password becomes effective through selection of **Enter Password** in this category.

After the [ENT] key is pressed, the display prompts with the message **NEW PASSWORD**. The user presses digit keys that represent the new password. For security, the digits are echoed with an asterisk (*****). The user then presses the [ENT] key and is prompted with the message **REPEAT**. The new password must be entered again followed by the [ENT] key. If the two entered passwords are the same, then the message **CHANGED** is displayed. If they are not the same, then **NOT CHANGED** is displayed and the old password remains selected.

11. DIGITAL OUTPUT TEST

This category is used to test digital outputs of the DGP system.

After the [ENT] key is pressed, the display will show the first menu item, **END TEST MODE**. The user may then select a test from the menu by using the arrow keys followed by the [ENT] key.



NOTE

At this point the privilege level must be Control level. If the privilege level is wrong, then an error message is displayed and the test is not performed.

If outputs are enabled, the user must specify if they want to disable protection. The message **DISABLE PROT?** is displayed. The user presses [1/Y] for **YES** or [3/N] for **NO** followed by [ENT]. If the user indicates **NO**, then the message **CANCELLED** is displayed and test selection is stopped. If user indicated **YES**, then the test name will be redisplayed. The word **ON** will also be shown in the rightmost two characters of the display and the test is performed.

To stop the digital output test and re-enable protection, the press the arrow keys until **END TEST MODE** is displayed, then press the [ENT] key. The test can also be stopped by pressing [END] [ENT] key sequence, which ends the DGP session.

The available digital output tests are shown in Figure 8–4: [ACT] KEY MENU STRUCTURE on page 8–11.

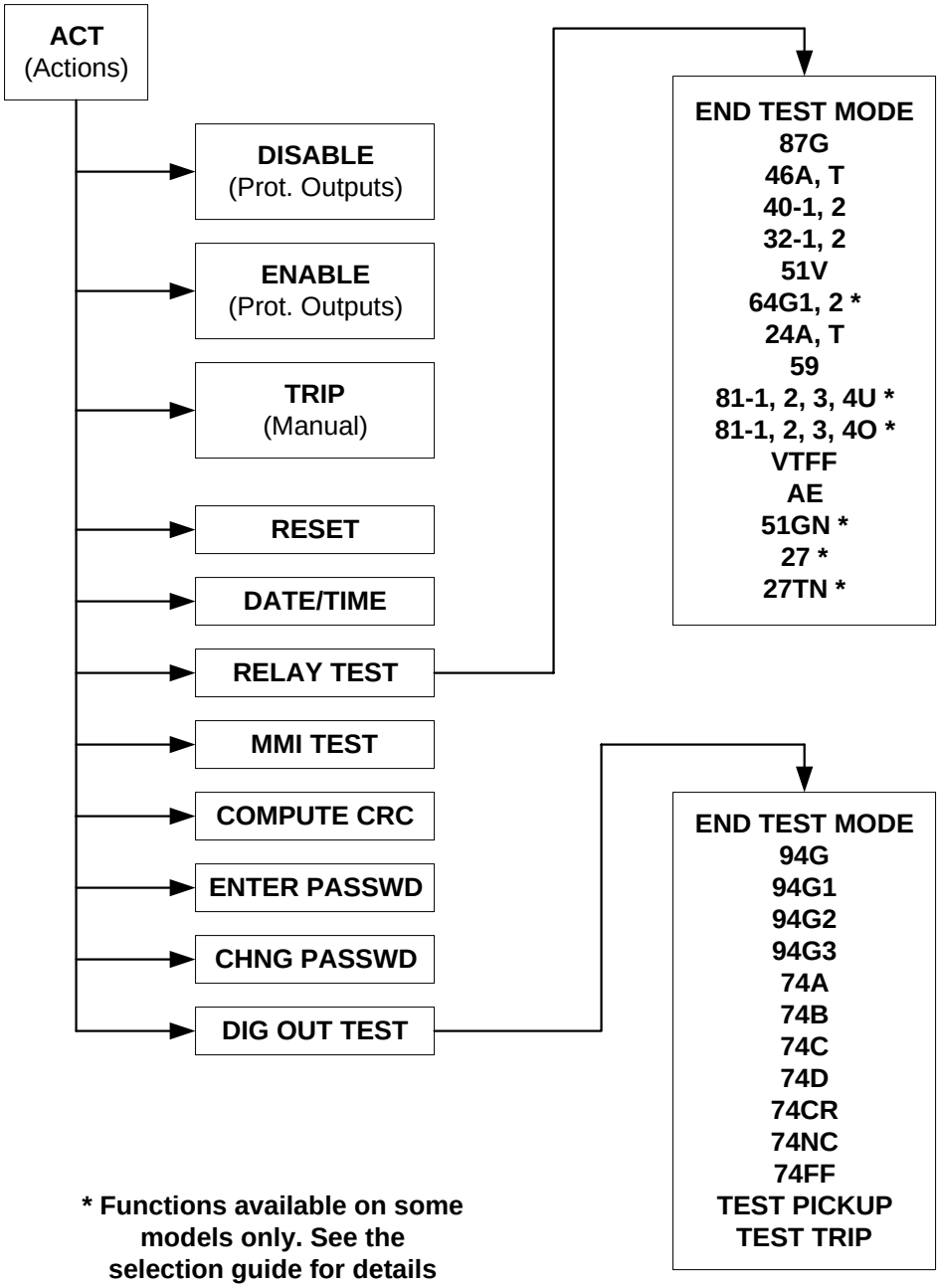

NOTE: The above menu items (except TIME/DATE) require an Action password to initiate the action. Resetting of the TIME/DATE requires a Setting password.

Figure 8–4: [ACT] KEY MENU STRUCTURE

8.3.10 INFORMATION KEY [INF]

The [INF] key is used to request information. The 8 information categories are listed below. The names displayed at the MMI are in parentheses. The categories can be scrolled through with the arrow keys. For convenience, however, each category is also assigned a number so that the user may access the category directly.

The key sequence for requesting information is: [INF] *n* [ENT], where *n* is the information category below:

n =	1: Status Info	(STATUS)
	2: Fault Info	(FAULT)
	3: Present Values	(VALUES)
	4: Events	(EVENTS)
	5: Password	(PASSWORD)
	6: Model	(MODEL)
	7: Station Id	(STATION ID)
	8: Generator Id	(GENERATOR ID)

If the optional information category number *n* is omitted, Category 1 (Status Info) is assumed. See Figure 8–5: [INF] KEY MENU STRUCTURE on page 8–14 for details.

1. REQUEST DGP STATUS

This category is used to display the present status of the DGP system.

If the [ENT] key is pressed, the first item displayed is the overall status of the DGP system. If the DGP is working properly and protecting the generator, the display reads **STATUS: OK**. If there is a critical failure, the display reads **STATUS: FAIL**. If there is a non-critical failure, the display reads **STATUS: WARN**. If the DGP hardware is working properly, there may be a miscellaneous status, displayed as **STATUS: MISC**. The above order represents the hierarchy in which the overall status is displayed. For example, if there is a critical alarm and a non-critical alarm, the display reads **STATUS: FAIL** indicating the critical alarm.

The user may use the arrow keys for further information if the status is a critical failure, a non-critical failure, or not protecting the generator.

2. REQUEST FAULT INFORMATION

This category is used to display (or print in applicable models) information associated with any of the last three faults that the DGP system has stored.

When [ENT] is pressed, the display prompts **FAULT #?**. The user presses a digit (1 to 3) followed by the [ENT] key. (where 1 = most recent fault, 2 = second most recent fault, etc.). If there is no valid fault information available, the message **NO FAULT DATA** is displayed. If the user presses a number not between 1 and 3, an error message is displayed.

The first item of the fault occurrence chosen is displayed as **DATE: xx/xx/xx**. Repeatedly pressing the [↑] key invokes the following displays:

DATE: *xx/xx/xx*

TIME: *xx:xx:xx*

OP TIME: *xx* (time in ms)

FAULT TYPE: *xxx* (examples: ABC,AB,AC)

TRIP TYPE: *xxx* (see list below)

NOTE

OP TIME is the time difference between any protection function pickup and any protection function trip, as long as all protection functions do not drop out simultaneously. The OP TIME counter will reset if all protection functions are reset at the same time.

A more detailed fault report can be obtained by using DGP-PC. See Chapter 10: SOFTWARE for details. The abbreviations for the trip and trigger types are as follows:

87G	40-1	51V	24I	81-1O	81-2U	51GN	DI3
46A	40-2	64G1	24T	81-2O	VTFF	27	DI4
46T	32-1	24A	59	81-1U	AE	27TN	

3. REQUEST PRESENT VALUES

This category displays the present analog values and status of the contact inputs monitored by the DGP.

If the [ENT] key is pressed, the first item is displayed as **IAS = xxx.xx**. Pressing the [↑] key displays **ANGLE IAS = xxx.xx**, etc. Continuing to press the [↑] key will display each of the quantities shown in Figure 8–5: [INF] KEY MENU STRUCTURE on page 8–14.

The values are periodically updated while on display.

4. REQUEST EVENTS

This category is used to print Sequence-of-Events information in the applicable DGP models.

5. VIEW PASSWORD

This category is used to view the remote communication passwords in encrypted form.

If the user presses the [ENT] key, a check is made to verify that communication is not in the process of changing the passwords. If the check fails, then an error message is displayed and the action not performed. If the check passes, then the word **VIEW** is displayed. Pressing the [↑] key displays the View level password. Pressing [↑] repeatedly displays the word **SETTING**, then the Setting level password; finally the word **CONTROL**, followed by the Control level password, and back to the word **VIEW**. All passwords are displayed in encrypted form. See Table 8–2: PASSWORD ENCRYPTION KEY TABLE on page 8–17 for password encryption details.

6. REQUEST DGP MODEL/VERSION

This category is used to display the DGP model number and the PROM version number.

If the user presses the [ENT] key, the model number is displayed as **MD:DGPxxxxxxxxx**. Pressing the [↑] key will display the PROM version number as **VER:Vxxxxxxxxxx**.

7. STATION ID

This category is used to view the 32-character station ID string downloaded by the remote communication link. Station ID is included in all system reports via DGP-PC. See Chapter 10: DGP-PC SOFTWARE for details.

If the [ENT] key is pressed, the first 16 characters of the Station ID are displayed. Pressing the [↑] or [↓] keys displays the next 16 characters of the Station ID.

8. GENERATOR ID

This category is used to view the 32-character Generator ID string downloaded by remote communications. Generator ID is included in all system reports via DGP-PC. See Chapter 10: DGP-PC SOFTWARE for details.

If the user presses the [ENT] key, the first 16 characters of the Generator ID are displayed. Pressing the [↑] or [↓] keys displays the next 16 characters of the Generator ID.

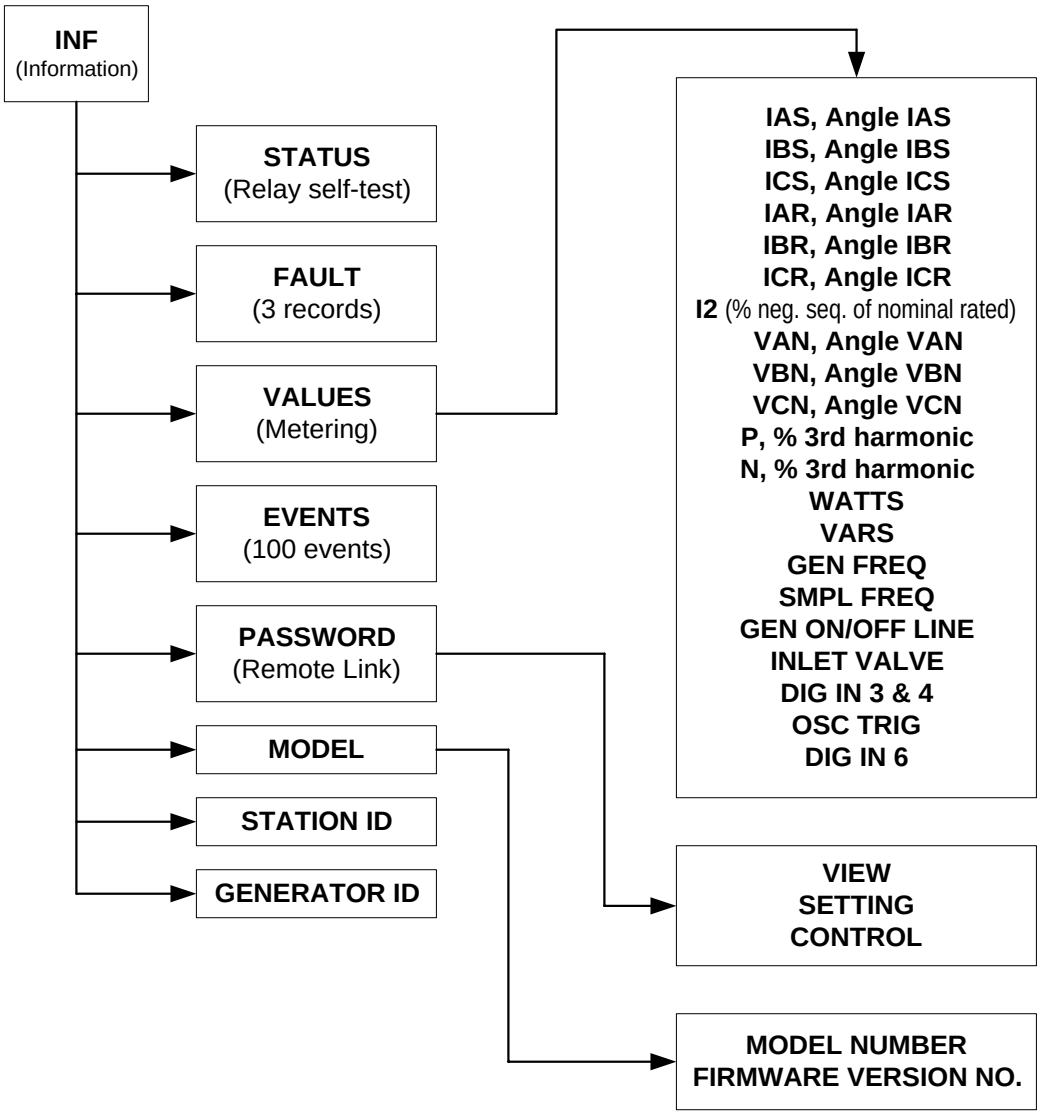

NOTES:

1. Currents, voltages, watts, and vars are either primary or secondary RMS values as selected by the user.
2. Voltages are either phase-ground or phase-phase, depending on wye or delta VT connections, respectively.
3. Phase angles go from 0° to 180° (lead) or –1° to –179° (lag) referenced to either phase A or AB voltage, depending on wye or delta VT connections, respectively. The reference voltage must be present for this function to operate.
4. $I2 \quad \frac{\text{Negative Sequence Current}}{\text{Rated Current}} \quad 100$
5. The third harmonic displayed is a percentage of the fundamental terminal voltage. However, the DGP models with function 27TN display the third harmonic in volts.
6. Watts and vars are automatically displayed with prefix K for kilo and M for mega as necessary.

Figure 8–5: [INF] KEY MENU STRUCTURE

8.4.1 DESCRIPTION

If the user enters an incorrect response (either data or a choice), an error message is displayed. See the table below for a list of the error messages.

If a Setting's CRC code becomes corrupted, certain MMI functions will be unavailable. Whenever the error occurs, the user will be unable to change any settings (although they can still be viewed). If the error occurs during startup, the user will be unable to perform any of the Action commands except recalculate the CRC. Once the CRC has been recalculated with the **COMPUTE CRC** command, the user will be able to perform Action commands and change settings.

The CRC code is a cyclic redundancy check value stored in memory. It is automatically created whenever a setting is changed. This CRC code enables the EEPROM self-test to verify the integrity of the settings area in EEPROM.

Table 8–1: MMI ERROR MESSAGES

ERROR MESSAGE	CAUSE OF ERROR
VAL OUT OF RANGE	Setting value either greater than upper limit or less than lower limit.
SETT NUM INVALID	Setting number is not valid.
Y/N NOT ENTERED	Setting value or response to a prompt had to be **YES** or **NO** but [1/Y] or [3/N] key was not entered.
REQUEST INVALID	Any key that is invalid during a key sequence. Some examples are: CATEGORY INVALID: A wrong category number was entered for either an action or information item. DATE INVALID: The day, month, and/or year are not valid. TIME INVALID: The hour, minute, and/or second are not valid. FAULT # INVALID: A fault number greater than the number of faults selected, or 0, was entered. REMOTE LINK ACT: The remote communications link is in use for actions or settings, local settings changes and action cannot be performed. MMI KEY ERROR: MMI received an invalid key code from keyboard. (Hardware error) ACT INVALID NOW: The current action that the user is attempting to perform is invalid because the setting's CRC code is in error.

8.5.1 DESCRIPTION

There are two sets of passwords: MMI and Communications. These passwords are required to perform certain DGP operations. A password for Actions or Settings is entered by selecting the **ENTER PASSWD** action and entering the password after the prompt (see the [ACT] key section). If an action or setting change is not performed for a period of 15 minutes, the password becomes inactive. For settings, after the key sequence [END] [ENT] is pressed, the password privileges become inactive. The settings and actions may be viewed at any time but may only be changed if the password for that function is active. Refer to the [ACT] key section for additional information.

There are two MMI passwords, one for Actions and one for Settings access at the keypad. These passwords are limited to the numeric digits on the keypad. The MMI passwords are different from the communications passwords, which are for logging into the relay, remote settings changes, and performing remote actions. The communication passwords can contain any of the allowable alpha-numeric characters in Table 8–2: PASSWORD ENCRYPTION KEY TABLE. All 5 password types are listed below with their factory default values:

MMI Passwords	**Factory Default**
Actions	5678.
Setting Changes	1234.
Communications Passwords	**Factory Default**
Actions	CTRL!
Setting Changes	SETT!
Viewing information only	VIEW!



NOTE

All factory default passwords MUST BE CHANGED by the user before they can used effectively.

The communications passwords can only be viewed using the [INF] key and the MMI passwords can only be viewed from the **Information** menu in DGP-PC. All passwords are displayed in encoded form. Use the following encryption table to decode the passwords.

Table 8–2: PASSWORD ENCRYPTION KEY TABLE

Displayed	Decoded
(space)	P
!	T
"	X
$	Q
%	U
&	Y
(	R
)	V
*	Z
,	S
-	W
1	D
2	H
3	L
4	A
5	E
6	I
7	M

Displayed	Decoded
8	B
9	F
:	J
;	N
<	C
=	G
>	K
?	O
@	0
A	4
B	8
D	1
E	5
F	9
H	2
I	6
L	3

Displayed	Decoded
M	7
P	(space)
Q	$
R	(
S	,
T	!
U	%
V	)
W	-
X	"
Y	&
Z	*
[	.
\	#
]	'
^	+
_	/

9.1.1 HARDWARE JUMPERS

There are two factory-installed hardware jumpers in the MMI module set to inhibit the ability to perform the Remote Manual Trip function, the Remote Change Settings function, the Remote Disable Outputs function, and the Remote Enable Outputs function. These hardware jumpers *must* be removed if the above remote functions are to be allowed (see Figure 3–4: DGP MMI MODULE on page 3–5 for details).

9.1.2 MODEM CONNECTIONS & SETTINGS

When establishing communication between the DGP and a remote PC, two modems connected via a phone line are required. One modem is located at the DGP and the other modem is located at the PC. The cable that connects the modems with the DGP and PC is shown in Figure 9–1: DGP COMMUNICATIONS WIRING on page 9–3. Each of these modems must be "Hayes-compatible". This is necessary since the DGP-PC communications software sends a Hayes-compatible command string to the PC modem. The DGP does not send any configuration commands to its modem. The DGP modem and the PC modem must be uniquely configured to permit the user to log into and communicate with the DGP system with DGP-PC.

The required configuration settings are presented as changes to the factory-default configuration settings for a Hayes SmartModem. These default settings are:

B1	P	Y0	&K3	&S0	S7=30	S11=95	S26=1
E1	Q0	&C0	&L0	&T4	S8=2	S12=50	S36=1
L2	V1	&D0	&P0	&X0	S9=6	S18=0	S37=0
M1	W0	&G0	&Q5	S0=0	S10=14	S25=5	S38=20
N1	X4	&J0	&R0	S6=2			

Other Hayes-compatible modems may implement a subset of the full Hayes command set. It is the responsibility of the user to ascertain the exact commands accepted by a particular modem. The proper syntax for entering the Hayes-compatible commands (sometimes referred to as the "AT" command set) is not described here. Refer to the modem documentation for an explanation of this syntax.

9.1.3 PC MODEM

The PC modem must be configured for intelligent operation (that is, command recognition enabled). The default settings listed above are valid for DGP-PC. Those configuration settings critical to the operation of DGP-PC are changed by the software. The configuration commands sent to the modem from DGP-PC are:

+++ (set modem to command mode)
(delay 2 seconds)
ATE0L3Q0S7=60V0X4Y0 (see explanation below)

Command explanation:

AT	Modem attention command
E0	Disable command state echo
L0	Low speaker volume
Q0	Modem returns result codes
V0	Result codes returned in numeric form
X4	Enables features represented by result codes
Y0	Disable long space disconnect
S7=60	Allows modem to hang up if connection is not made within 60 seconds

If all of the above commands are not programmable, the modem may not operate properly. In addition to the required configuration settings above, it is suggested that two other settings be made. These are:

&D3	Causes the modem to reset on the ON-to-OFF transition of DTR (Data Terminal Ready)
&C1	Causes DCD (Data Carrier Detect) to track the received carrier signal

The modem will operate properly without making these two settings but the modem will not hang up if the appropriate handshaking signal is lost.

A DGP-PC setting establishes the baud rate, which must match the DGP baud rate setting. DGP-PC then sets the specified PC serial port (i.e., COM1, COM2) to the proper baud rate, parity, data bits, and stop bits. If the PC modem is capable of operating at more than one baud rate, then it must be able to automatically configure its baud rate, character length, and parity setting by examining the AT command prefix.

9.1.4 DGP MODEM

The DGP modem must be configured for "dumb" operation (that is, command recognition disabled). Since the DGP does not send any configuration commands to its modem, the required configuration settings must be made prior to connection. Additionally, the modem must be initialized to the required configuration settings each time modem power is turned OFF then ON. Depending on the design of the modem, this is accomplished by making the required settings via switches or saving the settings in non-volatile memory.

The required configuration settings are:

E0	Disable command state echo
L0	Low speaker volume
Q1	Disable result code display
&C1	Causes DCD (Data Carrier Detect) to track the received carrier signal
&D3	Causes the modem to reset on the ON-to-OFF transition of DTR (Data Terminal Ready)
&Q0	Asynchronous mode
S0=1	Enable auto-answer

If any of the above settings cannot be implemented, the modem may not answer, the DGP system may not connect properly, or the user may not be able to log into the DGP.

With a Hayes SmartModem or equivalent, the DGP modem performs a modulation handshake with the PC modem to set the DGP modem baud rate. The default setting N1 permits handshaking to occur at any baud rate supported by both modems. This is one reason why it is preferable to use identical modems at each end.

Note that auto-answering is controlled with register S0. S0=0 disables auto-answer. S0=1 causes the DGP modem to answer the incoming call after one ring. If it is desirable to delay modem answering, S0 can be set for any value between 1 and 255 (for the Hayes-compatible modem assumed). Note that DGP-PC (versions 2.0 and higher) configures the PC modem to wait 60 seconds for the DGP modem to answer. If the DGP modem register S0 is set higher than 12, the PC modem may time-out and hang up before the DGP modem can answer. S0=12 sets the DGP modem to answer after twelve rings, corresponding to an approximate 60 second delay (S7=60) at the PC modem. However, the number of rings corresponding to 60 seconds should be verified for a particular application.

9.1.5 NULL MODEM CONNECTIONS

A PC can be connected to the DGP without the intervening modems and phone line by using a "null modem" cable. The required pin-to-pin connections for this null modem cable are shown in the following diagram. The pin-to-pin connections for a null modem cable to DGP COMM connector are also shown below. Neither null modem cable should exceed 50 feet in length.

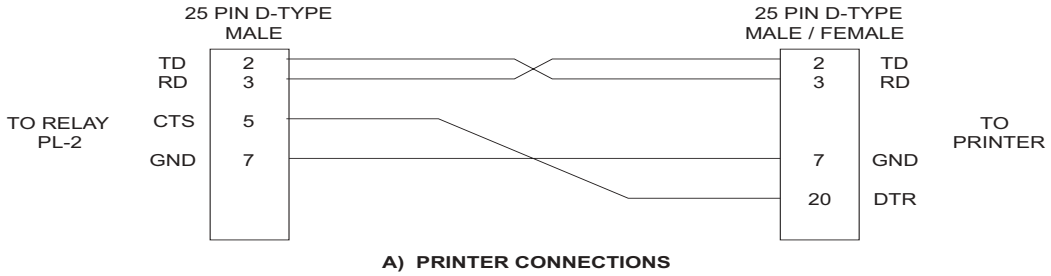

A) PRINTER CONNECTIONS

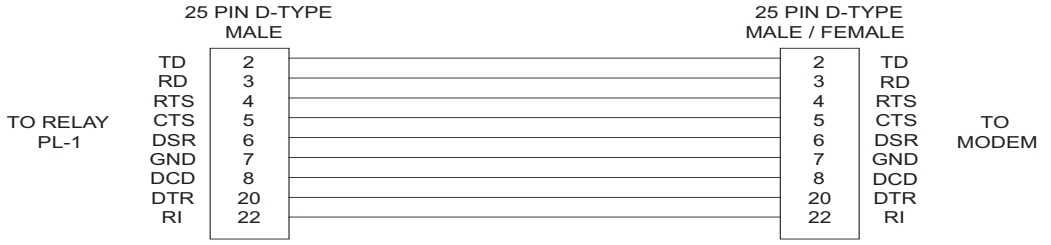

B) REMOTE COMMUNICATIONS VIA MODEM CABLE

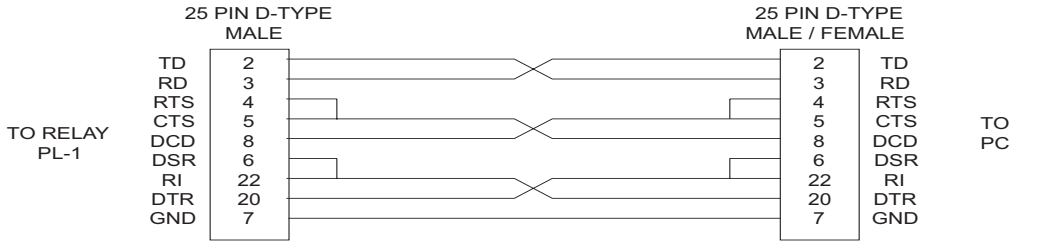

C) REMOTE COMMUNICATIONS TO PC DIRECTLY

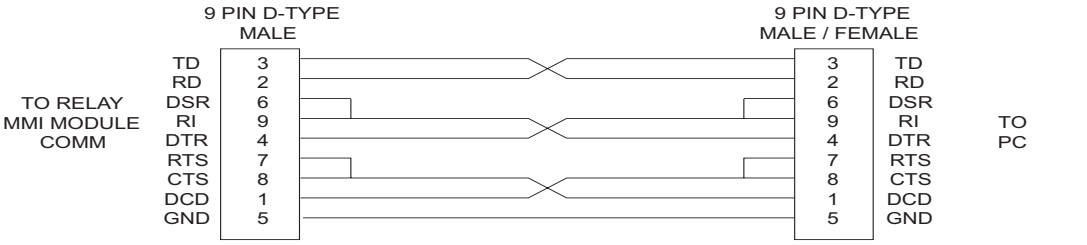

D) REMOTE COMMUNICATIONS FROM MMI MODULE TO PC

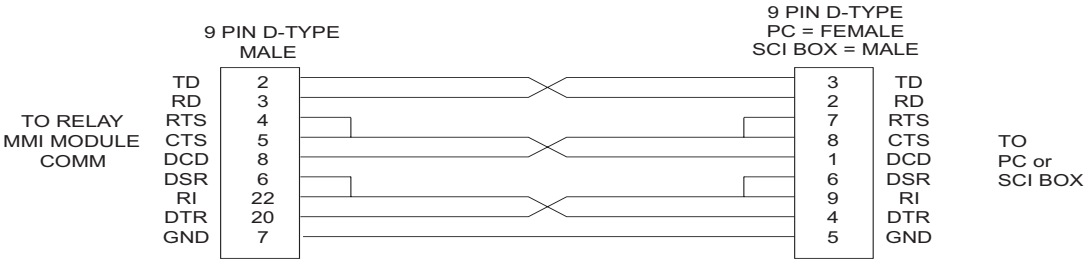

E) REMOTE COMMUNICATIONS TO PC DIRECTLY OR SCI BOX

CABLES AVAILABLE AS GE PART NO. 0246A9866. SPECIFY CABLE TYPE AND CONNECTOR GENDER.

Figure 9–1: DGP COMMUNICATIONS WIRING

9.1.6 RS485 COMMUNICATIONS

The DGP with Modbus communications can be used with a GE Multilin RS485 to RS232 converter when necessary. For computers without RS485 capability, a "master" SCI box is required as shown in the figure below. The SCI boxes are available from GE Multilin as catalog number RS485/RS232–*X*, where *X* specifies the voltage input (either 120 or 240). Please consult the SCI documentation for additional configuration information.

NOTE

For RS485 communications, the Master SCI box switch #2 must be set for **DIRECT** (the factory default) and the Slave switch #2 must be set for **MODEM**. Set switch #1 for **DATA CONTROLLED**.

Table 9–1: SCI DIP SWITCH CONFIGURATION

SWITCH 1	1	2	3	4
Data Controlled	ON	OFF	ON	X
DTR Controlled	OFF	ON	OFF	X

SWITCH 2	1	2	3	4
Direct	ON	OFF	ON	OFF
Modem	OFF	ON	OFF	ON

Correct polarity is also essential. ALL wires from the Master SCI to the Slave SCI must be wired with the positive (+) terminals connected together and the negative (–) terminals connected together. Each relay must be daisy-chained to the next. Avoid star or stub connected configurations. The last device (SCI box) at each end of the daisy-chain should be terminated with a 120 Ω, ¼ W resistor in series with a 1 nF capacitor across the positive (+) and negative (–) terminals.

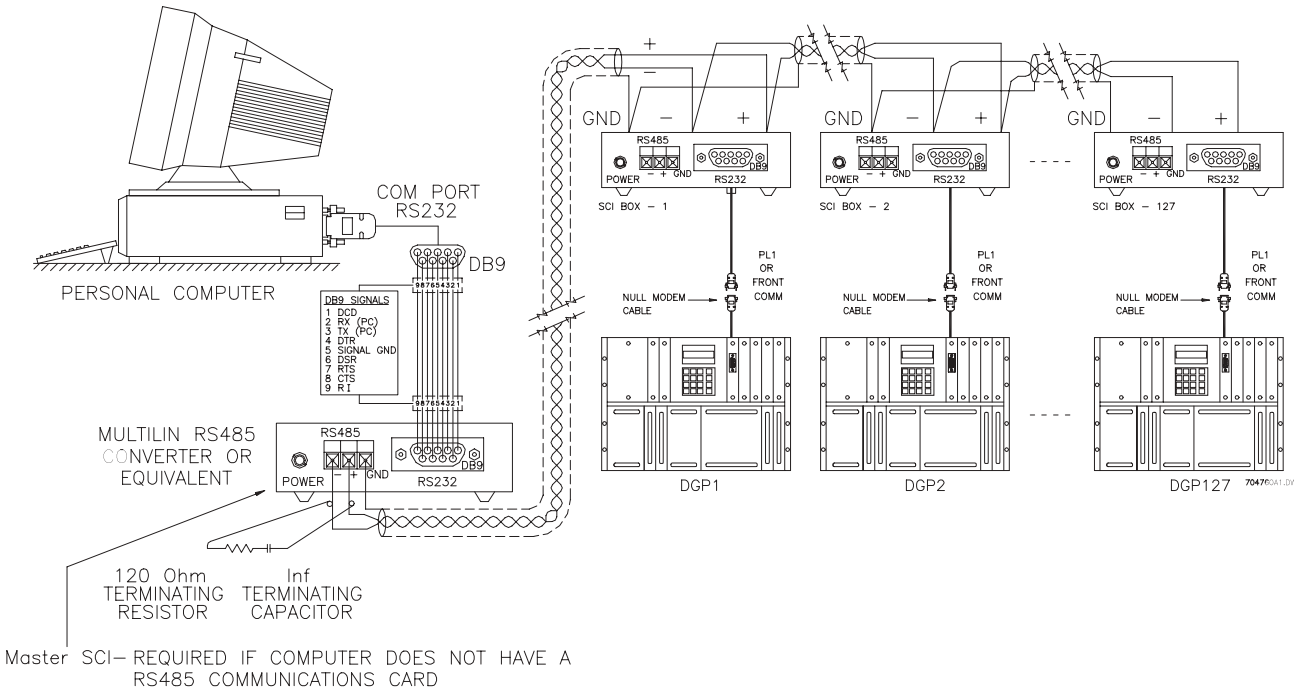

Figure 9–2: RS485 COMMUNICATIONS

9.2.1 INTRODUCTION

This section describes the Modicon Modbus RTU communication protocol used by the DGP Digital Generator Protection Relay.

The device serial communication parameters, such as baud rate and DGP Unit ID, are set via the keypad. If the DGP baud rate differs from the Modbus server baud rate, the device will not communicate to the server. The Unit ID also must be set properly to avoid conflict with other devices connected on the same network. Even though the setting range allows 16 bit values for Unit ID, the relay should be programmed for a Unit ID ranging from 1 to 127.

The DGP implements a subset of protocols defined by the Modicon Modbus RTU protocol standard. Multiple DGP relays can be configured as slaves to a single Modbus master through the RS485 port (using an RS485 to RS232 converter). The DGP is always a slave – it cannot be programmed as a master. Even though the Modbus protocol is available in Modbus RTU, Modbus ASCII and Modbus Plus protocols, only the Modbus RTU protocol is supported by the DGP.

9.2.2 DATA FRAME FORMAT & DATA RATE

One data frame of asynchronous transmission from the DGP is defaulted to 1 start bit, 8 data bits, no parity bits, and 1 stop bit at 9600 baud. The baud rate, parity bits and number of stop bits can be changed through the DGP keypad. This setting cannot be changed through the Modbus COM port.

9.2.3 DATA PACKET FORMAT

A complete request/response sequence consists of the following bytes.

Modbus Request Transmission:	**Bytes**
SLAVE ADDRESS	1
FUNCTION CODE	1
DATA STARTING ADDRESS	2
DATA	variable number depending on function code
REGISTER CODE	2 bytes
CRC Hi	High byte of CRC
CRC Lo	Low byte of CRC

Slave Response Transmission:	**Bytes**
SLAVE ADDRESS	1
FUNCTION CODE	1
BYTE COUNT	variable depending on number of registers
DATA	variable number depending on the function
CRC Hi	High Byte of CRC
CRC Lo	Low byte of CRC

a) SLAVE ADDRESS

This is the first byte of every transmission. It represents the Unit ID of the device programmed through the DGP keypad. In the master request, the slave address represents the address of the slave the message is intended for. In the slave response it is the address of the slave that is responding to the master request. Slave address 0 is reserved for broadcast transmissions by the master as specified by the Modbus protocol. The DGP does not support the broadcast transmissions. The DGP will respond only if the slave address specified by the master request matches its Unit ID; otherwise the DGP relay will not respond.

b) FUNCTION CODE

This is the second byte of every transmission. Modbus defines function codes 1 to 127 but the DGP implements only a subset of these functions. In a master request, the function code represents the action to be performed by the slave. The slave responds with function code identical to that sent by the master if there are no errors. In case of an error or exception, the slave sets the MS bit of the function code to 1 to indicate an error.

c) DATA

This will be a variable number of bytes depending on the function code.

d) CRC HI & CRC LO

This is a two-byte cyclic redundancy check. The MS byte is sent first and the LS byte next in accordance with the Modbus protocol reference guide.

9.2.4 ERROR CHECKING

In RTU mode, messages include an error checking field that is based on a cyclic redundancy check method. The CRC field checks the contents of the entire message. It is applied regardless of any parity check method used for the individual characters of the message.

The CRC field is two bytes, containing a 16-bit binary value. The CRC value is calculated by the transmitting device, which appends the CRC to the message. The receiving device recalculates CRC and compares with the value it received in the CRC field. If they are not equal an error message results.

The CRC is calculated by first pre-loading a 16-bit register to all 1's (in GE relays, all registers are pre-loaded with zeros). Then using a CRC polynomial specified by the CCITT, the CRC is computed (0xA001).

9.2.5 DATA FRAMING

Modbus RTU messages are separated by a silence period of at least 3.5 characters. The slave flushes the COM port and reads for the first character. This marks the start of transmission. The slave keeps reading until a silent interval of 3.5 characters which is about 3.65 ms at 9600 baud, which marks the end of transmission. At this stage it builds the message and resets the port.

9.3.1 FUNCTION CODE 03/04: READING HOLDING/INPUT REGISTERS

a) DESCRIPTION

Reads the binary contents holding/input registers (actual values) in the slave. They can be set point registers or any of the information reports, such as actual values.

b) QUERY

The query message specifies the starting register and the number of registers to be read.

Field:	Bytes	Example (hex):
SLAVE ADDRESS	1	11 Message for slave 17
FUNCTION CODE	1	03/04 Read registers
Starting address	2	Starting address of the register. High byte first and then the Low Byte
Num points	2	Number of registers to read. High Byte first then Low byte
CRC	2	CRC Calculated by master. High byte first. Low byte next

c) RESPONSE

The register data in the response is packed as two bytes per register. For each register the first byte contains the higher order byte and the second contains the lower order byte.

Example of typical response message

Field:	Bytes	Example (hex):
SLAVE ADDRESS	1	11 Message from slave 17
FUNCTION CODE	1	03/04 Read registers
Byte Count	1	Number of registers to read.
Data 1	2	High Byte first then Low byte
.....		
Data n	2	High Byte first then Low byte
CRC	2	CRC calculated by slave. High byte first, Low byte next

9.3.2 FUNCTION CODE 05: FORCE SINGLE COIL

a) DESCRIPTION

This function code allows the master to request a DGP slave to perform a specific command operation.

b) QUERY

The query message specifies the command to be executed.

Field:	Bytes	Example (hex):
SLAVE ADDRESS	1	11 Message for slave 17
FUNCTION CODE	1	05 Execute a command
Coil address	2	Starting address of the command to be executed. High byte first and then the Low Byte
Value	2	FF00 perform function
CRC	2	CRC Calculated by master. High byte first. Low byte next

c) RESPONSE

The normal response is an echo of the query returned after the command has been executed. Example of response to function 05H

Field:	Bytes	Example (hex):
SLAVE ADDRESS	1	11 Message from slave 17
FUNCTION CODE	1	05 Execute a coil command
Coil Address	2	Address of the command that has been executed
Value	2	FF00 Same as the master query
CRC	2	CRC Calculated by Slave High byte first. Low byte next

9.3.3 FUNCTION CODE 06: STORE SINGLE SETPOINT

a) DESCRIPTION

This function code allows the master to preset a DGP setpoint or to write to some control registers during the report reads.

b) QUERY

The query message specifies the setpoint to be preset

Field:	Bytes	Example (hex):
SLAVE ADDRESS	1	11 Message for slave 17
FUNCTION CODE	1	06 Store a single setpoint
Register address	2	Address of the register to be preset
Value	2	Value of the set point register
CRC	2	CRC Calculated by master. High byte first. Low byte next

c) RESPONSE

The normal response is an echo of the query returned after the contents of the register have been preset. Example of response to function 06H.

Field:	Bytes	Example (hex):
SLAVE ADDRESS	1	11 Message from slave 17
FUNCTION CODE	1	06 Store a single setpoint
Register Address	2	Address of the register that has been set to the value specified by the Master
Value	2	Same as the value specified by the master query.
CRC	2	CRC Calculated by Slave High byte first. Low byte next

9.3.4 FUNCTION CODE 16: PRESET MULTIPLE SETPOINTS

a) DESCRIPTION

This function code allows the master to preset Multiple Setpoint registers of the DGP Slave.

b) QUERY

The query message specifies the registers to be preset.

Field:	Bytes	Example (hex):
SLAVE ADDRESS	1	11 Message for slave 17
FUNCTION CODE	1	10 Store setpoints
Starting Address	2	Starting address of the register to be preset
Number of registers	2	Number of set point registers
Byte Count	1	Number of bytes. Equal to twice the number specified by the Number of registers
Data1	2	Set point Value 1
.....		
Data n	2	Set point value of the nth register from starting register
CRC	2	CRC Calculated by master. High byte first. Low byte next

c) RESPONSE

The normal response returns the slave address the function ID, Starting Address and the number of registers preset. An example is given below.

Field:	Bytes	Example (hex):
SLAVE ADDRESS	1	11 Message from slave 17
FUNCTION CODE	1	10 Store setpoints
Starting Address	2	Starting address of the register to be preset
Number of registers	2	Number of set point registers
CRC	2	CRC Calculated by master. High byte first. Low byte next

9.3.5 FUNCTION CODE 56: RETRANSMIT LAST PACKET

a) DESCRIPTION

This function is not supported by the Modbus protocol as it is a GE specific enhancement. When this command is issued, the last response from the slave is simply repeated.

b) QUERY

Example of a query message.

Field:	Bytes:	Example (hex):
SLAVE ADDRESS	1	11 Message for slave 17
FUNCTION CODE	1	38 Retransmit last packet
CRC	2	CRC Calculated by Slave High byte first. Low byte next

c) RESPONSE

The DGP Slave responds with the last message it transmitted to the master.

9.4.1 ERROR RESPONSES

When a DGP slave detects an error a response will be sent to the master. The MSBit of the function code will be set to 1 and the following byte is an exception code.

The Slave response will be

Field:	Bytes	Example (hex):
SLAVE ADDRESS	1	11 Message from slave 17
FUNCTION CODE	1	Function ID with MSbit set to 1
Exception Code	1	Exception Code
CRC	2	CRC Calculated by Slave High byte first. Low byte next

The DGP will implement the following exception response codes.

01: Illegal function

02: Illegal Data Value

03: Illegal Data Address

9.5.1 DATA TYPES

The DGP implementation of Modbus uses a small set of data types to interpret the data in the relay. Unless otherwise noted, all the data will be communicated with the MS byte first and then the LS bytes.

The following data types will be used by the DGP modbus communication.

1. **ASCII**: Each register is an ASCII character, with the high byte always zero and the low byte representing the ASCII character.
2. **DT0**: The date and time in seven registers. The registers have the following format:

   Register 1 – day range 1 to 31
   Register 2 – month range 1 to 12
   Register 3 – year range 00 to 99
   Register 4 – hour range 0 to 23
   Register 5 – minutes range 0 to 59
   Register 6 – seconds range 0 to 59
   Register 7 – milliseconds range 0 to 999.
3. **DT1**: Six registers with the same format as DT0 except without the millisecond field.
4. **LONG0**: Two registers. Byte order – Byte3 Byte2 Byte1 Byte0. No implied decimal point.
5. **LONG1**: Two registers. Byte order – Byte3 Byte2 Byte1 Byte0. One implied decimal place.

   For example, 3.4 will be represented as long integer 34.
6. **LONG2**: Two registers. Byte order – Byte3 Byte2 Byte1 Byte0. One implied decimal place.

   For example, 3.45 will be represented as long integer 345.
7. **INT0**: One register. Byte order – Byte2 Byte1. No implied decimal place, integer value only.
8. **INT1**: One register. Byte order – Byte2 Byte1. One implied decimal place.

   For example, 3.4 will be represented as 16-bit integer 34.
9. **INT2**: One register. Byte order – Byte2 Byte1. Two implied decimal places.

   For example, 3.45 will be represented as 16-bit integer 345.
10. **BOOLEAN**: High byte is always 0; low byte is either 0 or 1.
11. **SOE**: Eight registers. The first seven registers correspond to date and time according to format DT0. Register 8 is the event code (see DGP event code list below). If the requested event contains no data, then all 8 registers contain a value of 0.
12. **SP**: Special processing needed. Most of the registers are bit fields..

9.5.2 MEMORY MAP ORGANIZATION

The register maps have been designed by function basis as for GE-Modem to facilitate ease of design. For example, the Set Date and Time function is implemented by writing to certain setpoint registers even though it is not a part of the actual settings group. Settings are denoted by the register addresses with the most significant two bits representing 01B. Reports are represented by addresses with most significant two bits having a value of 00B. However, there are some control registers with in the report register map and they are read/write registers for setting the appropriate registers. They are programmed by Function 06.

Table 9–2: MEMORY MAP ORGANIZATION

MEMORY MAP SECTION	ADDRESS RANGE	DESCRIPTION
Fixed Value Input Registers	0000 to 001BH	PROM version and other model details
Present Value Report Registers	0400 to 0431H	DGP Present Values
Event Report Register Map	0800 to 0B20H	The last 100 events
Fault Status Register Map	0C00 to 0C18H	Faults 1 to 3 header
Fault Report Register Map	1000 to 129DH	Fault Report Summary for up to 3 faults
Oscillography	1400 to 17FFH	Oscillography header, settings, and data
DGP Status Register Map	1800 to 180CH	DGP status and self-test diagnostics
MMI Passwords	1C00 to 1C1FH	Passwords
Settings	4000 to 5D05H	DGP relay protection settings
Station and Generator ID	7E00 to 7E1FH	Station and Generator IDs

9.5.3 FIXED VALUE INPUT REGISTERS

Range: 0000 to 001BH

The fixed value registers contain the PROM version number and other details which do not normally change in the field. These registers are read only registers and read by Function Codes03/04.

9.5.4 PRESENT VALUE REPORT REGISTER MAP

Range: 0400 to 0431H

This register map specifies the present values report. The report is read by the master by using Function Code 03/04. Any attempt to write to these read-only registers causes an ILLEGAL ADDRESS exception to be returned.

Status Bits Representation:

Register 0438H: **EVENT/FAULT FLAG**

bit 0 - New Event(s)
bit 1 - New Fault(s)
bit 2 - In time sync
bit 3 - Local Settings change started
bit 4 - Local Settings change Done

9.5.5 EVENT REPORT MEMORY MAP

Range: 0800 to 0B20H

The event report memory map starts with the addresses with the six most-significant bits set to 000010B. All the registers are read-only; they can be read by using function codes 03 and 04.

NOTE

Register 0800H must be read first to determine the number of events. If a request is made for more events than present, the extra events are padded with zeros to signify no event is present. Registers 0801H to 0808H always contains the latest event; registers 0B19H to 0B20H contain the oldest events.

9.5.6 FAULT STATUS MEMORY MAP

Range: 0C00 to 0C18H

The fault status map has the register address with most-significant bits set to 000011B. These read-only registers are read with Modbus function codes 03/04. The first register contains the number of faults. This register must be read first to determine the number of faults. If a request is made for more faults than recorded, the data is filled with zeros. The maximum number of faults is determined by Setting 111: **NUM FLTS**. If the master attempts to read more faults than determined by this setting, an ILLEGAL ADDRESS exception is generated.

The TRIP TYPE field is a 16 bit binary value representing the function that has tripped due to the fault. The bit assignments are as follows:

Registers 0C08H, 0C10H, and 0C18H: **TRIP TYPE**

bit 0 - 94G
bit 1 - 94G1
bit 2 - 94G2
bit 3 - 94G3
bits 4 to 15 - reserved and presently set to zero

9.5.7 FAULT REPORT REGISTER MAP

Range: 1000 to 129DH

The fault report memory map has the register address with most significant bits set to 000100B. These read-only registers are read by Modbus Function Codes 03 and 04. The first register 1000H contains the number of faults recorded. The user must read this register first to find the number of faults. If a request is made for more faults than recorded, the data is filled with zeros. The maximum number of faults is determined by Setting 111: **NUM FLTS**. If the master attempts to read more faults than determined by this setting, an ILLEGAL ADDRESS exception is generated.

The fault report summary can store up to 10 sequence of events, with the oldest event recorded in the lower address (note that in the event report it is the opposite – the latest event is recorded in the lower address). If there are fewer than 10 events, the remaining registers are filled with zeroes to signify there are no events.

The **TRIP TYPE** field is a 16-bit binary value representing the function that has tripped due to the fault. The bit assignments are as follows:

bit 0 - 94G
bit 1 - 94G1
bit 2 - 94G2
bit 3 - 94G3
bits 4 to 15 - reserved and presently set to zero

Range: 1400 to 16FBH

The oscillography report contains three parts: the oscillography header, active settings for the particular fault, and oscillography data. Since the memory map is not sufficient for the entire oscillography report, the map is designed such a way that the fault number and cycle number for the oscillography in interest are selected and read from a fixed set of registers. The oscillography header and settings are unique for each fault number and do not depend on the cycle number. The oscillography data depends both on cycle number and fault number.

All oscillography registers have an address with most significant 6 bits set to 000101B.

a) CONTROL REGISTERS

Range: 17FE to 17FFH

The control registers are written using Modbus Function Code 06/10. These registers are read-write registers and can be read using Function Codes 03 and 04.

The fault number range is limited by Setting 111: **NUM FLTS**. The cycle number range is also limited by the same setting. That is, for one fault the range is 1 to 120, for two faults the range is 1 to 60, and for three faults it is 1 to 40. In addition, if the fault number is set higher than the number of faults recorded, the DGP slave responds with ILLEGAL DATA VALUE exception. The number of faults recorded can be obtained by reading the register 1400H.

Fault Number 1 corresponds to the newest fault and Fault number 3 corresponds to the oldest fault.



NOTE

You must write the fault number to register 17FFh and the cycle number to register 17FEh before reading the oscillography data corresponding to this fault.

b) OSCILLOGRAPHY HEADER

Range: 0C00H to 129DH

The first register (0C000H) contains the number of faults recorded. The rest of the registers contain the pre-fault values, fault values, and the sequence of events. In essence, this block is identical to the fault report header. All registers are read-only and can be read by Function Codes 03/04.

When a request is made to read these registers, the DGP relay looks at register 17FFH. If it is with in range then it responds with the oscillography header corresponding to the fault number in the register 17FFH. If the number is not valid, the DGP slave responds with ILLEGAL DATA VALUE exception.

c) OSCILLOGRAPHY SETTINGS

Range: 1400 to 1483H

Oscillography settings start from register 1400H. All registers are read-only and can be read using function codes 03H/04H.

When a request is made to read these registers, the DGP relay looks at register 17FFH. If it is with in the range then it responds with the oscillography settings corresponding to the fault number put in the register 17FFH. If the number is not valid the DGP slave responds with ILLEGAL DATA VALUE exception.

d) OSCILLOGRAPHY DATA

Range: 1600H to 16FBH

Oscillography data contains 16 registers per sample with 12 samples per cycle and therefore 192 registers per cycle of interest. Before reading the data, the master has to program control registers 17FEH with the cycle of interest and 17FFH with the fault number.

When a request is made to read these registers, the DGP looks at registers 17FEH and 17FFH. If they are within range, it responds with the oscillography data corresponding to the fault number and cycle number in registers 17FFH and 17FEH. If these numbers are not valid, then the DGP slave responds with an ILLEGAL DATA VALUE exception.

All these registers are read-only registers and are read using Function Codes 03/04.

e) COMMUNICATION EXAMPLE

An example is given here to show the sequence of transactions for retrieving oscillography:

1. Read the Number of Faults at registers 1000H.
2. Select a fault and write the corresponding fault number into register 17FFH.
3. Read data from 0C00H to 1483H for the oscillography header or fault summary.
4. Read data from 1600H to 16FBH for the Active settings at the time of fault.
5. Cycle Num =1.
6. If (cycle num > Max_Num) go to step 10.
7. Write the Cycle Num into register 17FEH.
8. Read the oscillography data from registers 1600H to 16FBH.
9. Increment the Cycle Num and go to step 6.
10. Finished reading Oscillography.

9.5.9 EVENT CODES & STATUS REGISTERS

a) EVENT CODES

A list of DGP event codes with their corresponding event messages is shown below:

0 FAIL - DAP BOARD: PROM
1 FAIL - DAP BOARD: LOCAL RAM
2 FAIL - DAP BOARD: DSPRAM CRC
3 FAIL - DAP BOARD: DSPRAM
4 FAIL - DAP BOARD: SYSRAM
5 FAIL - DAP BOARD: INTERRUPT
6 FAIL - DAP BOARD: TIMER
7 FAIL - DSP 1 BOARD: PROM
8 FAIL - DSP 1 BOARD: LOCAL RAM
9 FAIL - DSP 1 BOARD: SHARED RAM
10 FAIL - DSP 1 BOARD: NO RESPONSE
11 FAIL - ANI BOARD: CONTROLLER
12 FAIL - ANI BOARD: SERIAL MEMORY
13 FAIL - ANI BOARD: REFERENCE
14 FAIL - MGM 1 BOARD: SERIAL MEMORY
15 FAIL - SSP BOARD: PROM
16 FAIL - SSP BOARD: LOCAL RAM
17 FAIL - SSP BOARD: SYSRAM CRC
18 FAIL - SSP BOARD: SYSRAM
19 FAIL - SSP BOARD: INTERRUPT
20 FAIL - SSP BOARD: EEPROM
21 FAIL - MMI BOARD: DIGITAL OUTPUT
22 FAIL - MGM 1 BOARD: MODEL NUMBER
23 FAIL - SSP BOARD: VERSION NUMBER
24 FAIL - DAP BOARD: VERSION NUMBER
25 FAIL - DSP 1 BOARD: VERSION NUMBER
26 FAIL - DSP 2 BOARD: PROM
27 FAIL - DSP 2 BOARD: LOCAL RAM
28 FAIL - DSP 2 BOARD: SHARED RAM
29 FAIL - DSP 2 BOARD: NO RESPONSE
30 FAIL - DSP 2 BOARD: VERSION NUMBER
31 FAIL - DSP 3 BOARD: PROM
32 FAIL - DSP 3 BOARD: LOCAL RAM
33 FAIL - DSP 3 BOARD: SHARED RAM
34 FAIL - DSP 3 BOARD: NO RESPONSE
35 FAIL - DSP 3 BOARD: VERSION NUMBER
36 FAIL - ANI BOARD: GROUND REFERENCE
37 FAIL - PS1 BOARD: LOGIC VOLTAGE FAILED
38 FAIL - PS1 BOARD: +12 VOLTAGE FAILED
39 FAIL - PS1 BOARD: -12 VOLTAGE FAILED
40 FAIL - PS2 BOARD: LOGIC VOLTAGE FAILED
41 FAIL - PS2 BOARD: +12 VOLTAGE FAILED
42 FAIL - PS2 BOARD: -12 VOLTAGE FAILED
43 FAIL - PS BOARD: LOGIC VOLTAGE FAILED
44 FAIL - PS BOARD: +12 VOLTAGE FAILED
45 FAIL - PS BOARD: -12 VOLTAGE FAILED
46 FAIL - DSP 1 BOARD: SETTING CHECKSUM
47 FAIL - DSP 2 BOARD: SETTING CHECKSUM
48 FAIL - DSP 3 BOARD: SETTING CHECKSUM
49 FAIL - MGM 2 BOARD: SERIAL MEMORY
50 FAIL - MGM 2 BOARD: MODEL NUMBER
51 FAIL - ANI BOARD:CURRENT SUM
52 FAIL - ANI BOARD:CHANNEL SATURATED
53 FAIL - SSP BOARD:SETTINGS OUT OF RANGE
54 " "
55 WARN - MMI BOARD: PRINT SERIAL CHIP
56 WARN - SSP BOARD: TIMER
57 WARN - SSP BOARD: CAPRAM
58 WARN - SSP BOARD: REAL TIME CLOCK
59 WARN - MMI BOARD: LED DISPLAY
60 WARN - REMOTE COMM LOGIN FAILED
61 WARN - SPURIOUS TIME STROBES
62 WARN - DTA BOARD: SERIAL MEMORY
63 WARN - MMI BOARD: FRONT SERIAL CHIP
64 WARN - MMI BOARD: BACK SERIAL CHIP
65 WARN - PS1 BOARD: LOGIC VOLTAGE FAILED
66 WARN - PS1 BOARD: +12 VOLTAGE FAILED
67 WARN - PS1 BOARD: -12 VOLTAGE FAILED
68 WARN - PS2 BOARD: LOGIC VOLTAGE FAILED
69 WARN - PS2 BOARD: +12 VOLTAGE FAILED
70 WARN - PS2 BOARD: -12 VOLTAGE FAILED
71 WARN - CASE TO GROUND SHORTED
72 WARN - DIT BOARD: DIGITAL INPUT FAIL
73 WARN - ANI BOARD: SAMPLE CORRECTED
74 " "
75 " "
76 32-2 ON
77 32-2 OFF
78 51V PHASE A ON
79 51V PHASE B ON
80 51V PHASE C ON
81 51V PHASE A OFF
82 51V PHASE B OFF
83 51V PHASE C OFF
84 24A PHASE A ON
85 24A PHASE B ON
86 24A PHASE C ON
87 24A PHASE A OFF
88 24A PHASE B OFF
89 24A PHASE C OFF
90 59 ON
91 59 OFF
92 24T PHASE A ON
93 24T PHASE B ON
94 24T PHASE C ON
95 24T PHASE A OFF
96 24T PHASE B OFF
97 24T PHASE C OFF

98 24I PHASE A ON
99 24I PHASE B ON
100 24I PHASE C ON
101 24I PHASE A OFF
102 24I PHASE B OFF
103 24I PHASE C OFF
104 64G1 ON
105 64G1 OFF
106 64G2 ON
107 64G2 OFF
108 81-1O ON
109 81-1O OFF
110 81-2O ON
111 81-2O OFF
112 81-3O ON
113 81-3O OFF
114 81-4O ON
115 81-4O OFF
116 81-1U ON
117 81-1U OFF
118 81-2U ON
119 81-2U OFF
120 81-3U ON
121 81-3U OFF
122 81-4U ON
123 81-4U OFF
124 51GN ON
125 51GN OFF
126 27 ON
127 27 OFF
128 94G TRIP SIGNAL ON
129 94G1 TRIP SIGNAL ON
130 94G2 TRIP SIGNAL ON
131 94G3 TRIP SIGNAL ON
132 94G TRIP SIGNAL RESET
133 94G1 TRIP SIGNAL RESET
134 94G2 TRIP SIGNAL RESET
135 94G3 TRIP SIGNAL RESET
136 94G TRIP CIRCUIT ENERGIZED
137 94G1 TRIP CIRCUIT ENERGIZED
138 94G2 TRIP CIRCUIT ENERGIZED
139 94G3 TRIP CIRCUIT ENERGIZED
140 94G TRIP CIRCUIT NOT ENERGIZED
141 94G1 TRIP CIRCUIT NOT ENERGIZED
142 94G2 TRIP CIRCUIT NOT ENERGIZED
143 94G3 TRIP CIRCUIT NOT ENERGIZED
144 94G TRIP CIRCUIT OPEN ALARM ON
145 94G1 TRIP CIRCUIT OPEN ALARM ON
146 94G2 TRIP CIRCUIT OPEN ALARM ON
147 94G3 TRIP CIRCUIT OPEN ALARM ON
148 94G TRIP CIRCUIT OPEN ALARM OFF
149 94G1 TRIP CIRCUIT OPEN ALARM OFF
150 94G2 TRIP CIRCUIT OPEN ALARM OFF
151 94G3 TRIP CIRCUIT OPEN ALARM OFF
152 GENERATOR OFF-LINE
153 GENERATOR ON-LINE
154 TURBINE INLET VALVE CLOSED
155 TURBINE INLET VALVE OPEN
156 DIGITAL INPUT 3 CLOSED
157 DIGITAL INPUT 4 CLOSED
158 DIGITAL INPUT 3 OPEN
159 DIGITAL INPUT 4 OPEN
160 OSC TRIGGER
161 VT FUSE FAILURE ALARM ON
162 VT FUSE FAILURE ALARM OFF
163 EXTERNAL VTFF CLOSED
164 EXTERNAL VTFF OPEN
165 ACCIDENTAL ENGERGIZATION ON
166 ACCIDENTAL ENGERGIZATION OFF
167 27TN ON
168 27TN OFF
169 " "
170 " "
171 " "
172 " "
173 " "
174 " "
175 " "
176 REMOTE - PASSWORD CHANGED
177 REMOTE - MANUAL TRIP
178 REMOTE - ENABLE OUTPUTS
179 REMOTE - DISABLE OUTPUTS
180 REMOTE - SETTINGS CHANGE STARTED
181 REMOTE - SETTINGS CHANGE DONE
182 REMOTE - MANUAL TRIP ATTEMPT
183 REMOTE - PROTECTION TURNED OFF
184 REMOTE - PROTECTION TURNED ON
185 REMOTE - FAULT REPORTS RESET
186 REMOTE - SEQUENCE OF EVENTS RESET
187 " "
188 " "
189 " "
190 " "
191 " "
192 LOCAL - MANUAL TRIP
193 LOCAL - ENABLE OUTPUTS
194 LOCAL - DISABLE OUTPUTS
195 LOCAL - SETTINGS CHANGE STARTED
196 LOCAL - SETTINGS CHANGE DONE
197 LOCAL - MANUAL TRIP ATTEMPT
198 LOCAL - PROTECTION TURNED OFF
199 LOCAL - PROTECTION TURNED ON
200 LOCAL - FAULT REPORTS RESET
201 LOCAL - SEQUENCE OF EVENTS RESET
202 " "
203 " "
204 " "
205 " "

206 " "
207 DAP BOARD: PROCESSOR FAILURE CLEARED
208 DSP1 BOARD: FAILURE CLEARED
209 DSP2 BOARD: FAILURE CLEARED
210 DSP3 BOARD: FAILURE CLEARED
211 SSP BOARD: FAILURE CLEARED
212 DCI BOARD: FAILURE CLEARED
213 ANI BOARD: FAILURE CLEARED
214 MGM1 BOARD: FAILURE CLEARED
215 MGM2 BOARD: FAILURE CLEARED
216 MMI BOARD: FAILURE CLEARED
217 ANI BOARD: REFERENCE CORRECTED
218 DIT BOARD: DIGITAL INPUT CORRECTED
219 SSP BOARD: QUEUES REINITIALIZED
220 87G PHASE A ON
221 87G PHASE B ON
222 87G PHASE C ON
223 87G PHASE A OFF
224 87G PHASE B OFF
225 87G PHASE C OFF
226 46A ON
227 46A OFF
228 46T ON
229 46T OFF
230 40-1 ON
231 40-1 OFF
232 40-2 ON
233 40-2 OFF
234 32-1 ON
235 32-1 OFF
236 DSP1 BOARD: NO RESPONSE CLEARED
237 DSP2 BOARD: NO RESPONSE CLEARED
238 DSP3 BOARD: NO RESPONSE CLEARED
239 CASE TO GROUND SHORT REMOVED
240 ANI BOARD: GROUND FAILURE CLEARED
241 PS1 BOARD: LOGIC FAILURE CLEARED
242 PS1 BOARD: +12V FAILURE CLEARED
243 PS1 BOARD: -12V FAILURE CLEARED
244 PS2 BOARD: LOGIC FAILURE CLEARED
245 PS2 BOARD: +12V FAILURE CLEARED
246 PS2 BOARD: -12V FAILURE CLEARED
247 PS BOARD: LOGIC FAILURE CLEARED
248 PS BOARD: +12V FAILURE CLEARED
249 PS BOARD: -12V FAILURE CLEARED
250 ANI BOARD: CURRENT SUM FAILURE CLEARED

b) SP (STATUS) REGISTERS

REGISTER	BIT ASSIGNMENT
0431h: Event/Fault Flag	bit 0 = New Event(s)
	bit 1 = New Fault(s)
	bit 2 = In Time Sync
	bit 3 = Local Setting Change Started
	bit 4 = Local Setting Done
100Ah: Fault Type	1 = Phase A
	2 = Phase B
	3 = Phase A-B
	4 = Phase C
	5 = Phase A-C
	6 = Phase B-C
	7 = Phase A-B-C
100Bh: Trip Type	0 = 87G
	1 = 46A
	2 = 46T
	3 = 40-1
	4 = 40-2
	5 = 32-1
	6 = 32-2
	7 = 51V
	8 = 64G1
	9 = 64G2
	10 = 24A
	11 = 24T
	12 = 24I
	13 = 59
	14 = 81-1O
	15 = 81-2O
	16 = 81-3O
	17 = 81-4O
	18 = 81-1U
	19 = 81-2U
	20 = 81-3U
	21 = 81-4U
	22 = VTFF
	23 = OSC
	24 = DI-3
	25 = DI-4
	26 = AE
	27 = 51GN
	28 = 27
	29 = 27TN
4002h: Trip Voltage Monitor (TVM)	bit 3 = 94G0
	bit 2 = 94G1
	bit 1 = 94G2
	bit 0 = 94G3
4003h: Trip Current Monitor (TCM)	bit 3 = 94G0
	bit 2 = 94G1
	bit 1 = 94G2
	bit 0 = 94G3
4007h: Comport	BBPS: BB = baud rate, P = parity bit, S = stop bit. Example: 9600 baud, no parity, 1 stop bit would be represented as 9601.
4009h: TIMESYNC	0 = Internal
	1 = IRIG-B
	2 = G-NET
4100h - 5D00h xxx TRIP	bit 3 = 94G0
	bit 2 = 94G1
	bit 1 = 94G2
	bit 0 = 94G3
4101h - 5D01h xxx ALARM	bit 3 = 74A
	bit 2 = 74B
	bit 1 = 74C
	bit 0 = 74D
1800h: SSP STAT	bit 0 = SSP PROM Failure
	bit 1 = SSP LOCAL RAM Failure
	bit 2 = SSP SYSTEM CRC Failure
	bit 3 = SSP SETTING Out of Range
	bit 4 = SSP SYSRAM Failure
	bit 5 = SSP Interrupt Failure
	bit 6 = SSP Timer Failure
	bit 7 = SSP EEPROM Failure
	bit 8 = SSP CAPRAM Failure
	bit 9 = SSP Real Time Clock Failure
	bit 10 = Version Number Mismatch

REGISTER	BIT ASSIGNMENT
	bit 11 = No DAP Interrupt
	bit 12-13 = Spare
	bit 14 = SSP Digital Output Enable Flag
	bit 15 = SSP Processor in Reset
1801h: DAP STAT	bit 0 = DAP PROM Failure
	bit 1 = DAP LOCAL RAM Failure
	bit 2 = DSPRAM CRC Failure
	bit 3 = DSPRAM Failure
	bit 4 = DAP SYSRAM Failure
	bit 5 = DAP Interrupt Failure
	bit 6 = DAP Timer Failure
	bit 7 = No DSP1 Response
	bit 8 = No DSP2 Response
	bit 9 = No DSP3 Response
	bit 10 = Version Number Mismatch
	bit 11 = Spare
	bit 12 = No SSP Interrupt
	bit 13 = Spare
	bit 14 = Digital Output Enable Flag
	bit 15 = DAP Processor in Reset
1802h: DSP1 STAT	bit 0 = DSP1 PROM Failure
	bit 1 = DSP1 LOCAL RAM Failure
	bit 2 = Spare
	bit 3 = DSPRAM Failure
	bit 4 = Spare
	bit 5 = DSP1 Setting Checksum Failure
	bit 6-9 = Spare
	bit 10 = DSP1 Version Number Failure
	bit 11-14 = Spare
	bit 15 = DSP1 Processor in Reset.
1803h: DSP2 STAT	bit 0 = DSP2 PROM Failure
	bit 1 = DSP2 LOCAL RAM Failure
	bit 2 = Spare
	bit 3 = DSPRAM Failure
	bit 4 = Spare
	bit 5 = DSP2 Setting Checksum Failure
	bit 6-9 = Spare
	bit 10 = DSP2 Version Number Failure
	bit 11-14 = Spare
	bit 15 = DSP2 Processor in Reset.

REGISTER	BIT ASSIGNMENT
1804h: DSP3 STAT	bit 0 = DSP3 PROM Failure
	bit 1 = DSP3 LOCAL RAM Failure
	bit 2 = Spare
	bit 3 = DSPRAM Failure
	bit 4 = Spare
	bit 5 = DSP3 Setting Checksum Failure
	bit 6-9 = Spare
	bit 10 = DSP3 Version Number Failure
	bit 11-14 = Spare
	bit 15 = DSP3 Processor in Reset.
1805h: ANI STAT	bit 0 = ANI Controller Failure
	bit 1 = ANI EEPROM Failure
	bit 2 = ANI Reference Failure
	bit 3 = ANI Reference Failure Corrected
	bit 4 = ANI Ground Reference Failure
	bit 5 = ANI No DMA Interrupt
	bit 6 = ANI Current Sum Failure
	bit 7 = ANI Channel Saturated
	bit 8-15 = Spare
1806h: MMISTAT	bit 0 = MMI LED Display Failure
	bit 1 = MMI UART Chip #1 Failure
	bit 2 = MMI Digital Output Failure
	bit 3 = MMI UART Chip #2 Failure
	bit 4 = MMI UART Chip #3 Failure
	bit 5-15 = Spare
1807h: MGM1STAT:	bit 0 = MGM1 EEPROM Failure
	bit 1 = MGM1 Model Number Failure
	bit 2-15= Spare
1808h: MGM2STAT:	bit 0 = MGM2 EEPROM Failure
	bit 1 = MGM2 Model Number Failure
	bit 2-15 = Spare
1809h: DITSTAT:	bit 0 = DIT Digital Input Error
	bit 1 = DIT Digital Input Error Corrected
	bit 2-15 = Spare
180Ah: PWR1STAT:	bit 0 = POWER SUPPLY 1: +12 V Warning
	bit 1 = POWER SUPPLY 2: +12 V Warning

REGISTER	BIT ASSIGNMENT
	bit 2 = POWER SUPPLY 1: +12 V Failed
	bit 3 = POWER SUPPLY 1 & 2: +12 V Failed
	bit 4 = POWER SUPPLY 1: –12 V Warning
	bit 5 = POWER SUPPLY 2: –12 V Warning
	bit 6 = POWER SUPPLY 1: –12 V Failed
	bit 7 = POWER SUPPLY 1 & 2: –12 V Failed
	bit 8-15 = Spare
180Bh: PWR2STAT:	bit 0 = POWER SUPPLY 1: Warning
	bit 1 = POWER SUPPLY 2: Warning
	bit 2 = POWER SUPPLY 1: Failed
	bit 3 = POWER SUPPLY 1 & 2: Failed
	bit 4-15 = Spare
180Ch: MISCSTAT:	bit 0 = Protection Enabled Flag
	bit 1 = Digital Output Enable Flag
	bit 2 = Case to Ground Shorted
	bit 3 = Spare
	bit 4 = Fuse Failure
	bit 5 = Logon Failure
	bit 6 = Remote Manual-Trip Jumper Installed
	bit 7 = Remote Change-Settings Jumper Installed
	bit 8 = TEST MODE Activated
	bit 9 = Time Strobe Failed
	bit 10 = Digital Output Test Activated
	bit 11 = 94G-A Trip Continuity Error
	bit 12 = 94G-B Trip Continuity Error
	bit 13 = 94G-C Trip Continuity Error
	bit 14 = 94G-D Trip Continuity Error
	bit 15 = Spare

c) OSC SETTINGS

Each register contains one Setting in sequential order according to Table 2–1: DGP SYSTEM SETTINGS & RATINGS on page 2–3. Note that a cycle number and fault number must be selected (registers 17FEh to 17FF) prior to reading OSC Settings.

REGISTER	BIT ASSIGNMENT
160Ch: DI SAMPx	bit 0 = DI-1, Generator Off Line
	bit 1 = DI-2, Turbine Inlet Valve Closed
	bit 2 = DI-3, External Trip 1
	bit 3 = DI-4, External Trip 2
	bit 4 = DI-5, Oscillography Trigger
	bit 5 = DI-6, External VTFF / Disable Protections
	bit 6 = not used
	bit 7 = IRIG-B
	bit 8-15 = not used
160Dh: DO SAMPx	bit 00 = Trip 94G
	bit 01 = Trip 94G1
	bit 02 = Alarm 74A
	bit 03 = Alarm 74B
	bit 04 = Alarm 74C
	bit 05 = Alarm 74D
	bit 06 = Alarm VTFF
	bit 07 = Trip 94G2
	bit 08 = Trip 94G3
	bit 09 = not used
	bit 10 = Non Critical Alarm
	bit 11 = Critical Alarm
	bit 12-15 = not used
160Eh: PUFLG0	Protection pickup flags group 0 (1 = Active state; 0 = Inactive state)
	bit 00 87G-A
	bit 01 87G-B
	bit 02 87G-C
	bit 03 46A
	bit 04 46T
	bit 05 40-1
	bit 06 40-2
	bit 07 32-1
	bit 08 32-2
	bit 09 51V-A
	bit 10 51V-B
	bit 11 51V-C
	bit 12 24A-A
	bit 13 24A-B
	bit 14 24A-C
	bit 15 59
160Fh: PUFLG1	Protection pickup flags group 1 (1 = Active state; 0 = Inactive state)
	bit 00 24T-A
	bit 01 24T-B
	bit 02 24T-C
	bit 03 24I-A
	bit 04 24I-B
	bit 05 24I-C
	bit 06 64G1
	bit 07 64G2
	bit 08 81-1o
	bit 09 81-2o
	bit 10 81-3o
	bit 11 81-4o
	bit 12 81-1u
	bit 13 81-2u
	bit 14 81-3u
	bit 15 81-4u
1610h: PUFLG2	Protection pickup flags group 2 (1 = Active state; 0 = Inactive state)
	bit 00 AE
	bit 01 27
	bit 02 51GN
	bit 03 DI3
	bit 04 DI4
	bit 05 27TN
	bit 06 - bit 15 = not used
1611h: PRFLG0	Protection function trip flags group 0. Bit assignment is same as pickup flags group 0.
1612h: PRFLG1	Protection function trip flags group 1. Bit assignment is same as pickup flags group 1.
1613h: PRFLG2	Protection function trip flags group 2. Bit assignment is same as pickup flags group 2.

9.5.10 MMI PASSWORDS

Range: 1C00 to 1C1FH

The master can read the MMI passwords from registers starting at address 1C00H by using function codes 03H/04H. Each register represents a ASCII character with the high-byte set to zero. The register addresses have their most significant 6 bits set to 000111B.

9.5.11 SETTINGS

Range: 4000 to 5D05

The setting registers are read-write registers. The register addresses have their two most significant bits set to 01B. The next six significant bits represent the category number and the final eight bits denote the setting number. There is a direct correspondence between the register address and the category setting number. To obtain the category setting number, add 1 to category number (the least significant six bits of the register address high byte), multiply by 100, and add the low byte plus 1.

The setting registers can be read by using function codes 03H/04H. The setting registers can be preset by using function codes 06H/10H.

The settings register map contains **all** settings available in all DGP models. Since some settings are not valid for some models, an ILLEGAL ADDRESS exception may be obtained when reading/writing multiple setpoints.

Settings change at the relay take place in a temporary local RAM. To make the settings permanent, the coil command END must be executed. Upon executing this command, the relay copies the temporary settings from local RAM to EEPROM, making the changes permanent.

9.5.12 STATION & GENERATOR ID REGISTER MAP

Range: 7E00 to 7E1FH

Station and Generator ID registers are read-writer registers. They are read using function codes 03/04H and written using function code 10H.

9.5.13 DATE & TIME

Range: 7F00 to 7F05H

The master can change the date and time by writing into the registers starting at address 7F00H and by using the function code 10H. All these registers are write-only registers. The individual registers cannto be programmed, either the date or time or both may be changed.

Table 9–3: DGP MODBUS MEMORY MAP (Sheet 1 of 24)

ADDRESS		ITEM NAME	UNITS	FORMAT	NO. OF REGISTERS
DEC	HEX				
FIXED VALUE REPORT					
0	0	Model Number	N/A	ASCII	16
16	10	Version Number	N/A	ASCII	12
PRESENT VALUE REPORT					
1024	400	Date and Time	N/A	DT0	7
1031	407	Mag IAS	AMP	LONG2	2
1033	409	Angle IAS	DEGREE	INTO	1
1034	40A	Mag IBS	AMP	LONG2	2
1036	40C	Angle IBS	DEGREE	INTO	1
1037	40D	Mag ICS	AMP	LONG2	2
1039	40F	Angle ICS	Degree	INTO	1
1040	410	Mag IAR	AMP	INTO	2
1042	412	Angle IAR	DEGREE	INTO	1
1043	413	Mag IBR	AMP	LONG2	2
1045	415	Angle IBR	DEGREE	INTO	1
1046	416	Mag ICR	AMP	LONG2	2
1048	418	Ang ICR	DEGREE	INTO	1
1049	419	Mag I2	AMP	LONG2	2
1051	41B	Mag VA	VOLT	LONG1	2
1053	41D	Angle VA	DEGREE	INTO	1
1054	41E	Mag VB	VOLT	LONG1	2
1056	420	Ang VB	DEGREE	INTO	1
1057	421	Mag VC	VOLT	LONG1	2
1059	423	Ang VC	DEGREE	INTO	1
1060	424	Third Harmonic PH	VOLT	INT1	1
1061	425	Third Harmonic N	VOLT	INT1	1
1062	426	Watts	WATT	LONG1	2
1064	428	VARS	VAR	LONG1	2
1066	42A	Gen OFFLINE	N/A	BOOLEAN	1
1067	42B	FUEL VALVE	N/A	BOOLEAN	1
1068	42C	DI3	N/A	BOOLEAN	1
1069	42D	DI4	N/A	BOOLEAN	1

Table 9–3: DGP MODBUS MEMORY MAP (Sheet 2 of 24)

ADDRESS		ITEM NAME	UNITS	FORMAT	NO. OF REGISTERS
DEC	HEX				
1070	42E	DI6	N/A	BOOLEAN	1
1071	42F	SYS FREQ	HZ	INT2	1
1072	430	SAMP FREQ	HZ	INT1	1
1073	431	Event Fault Flags	N/A	SP	1
EVENT REPORT					
2048	800	Num Events	N/A	INTO	1
2049	801	Event 1		SOE	8
2057	809	Event 2		SOE	8
2065	811	Event 3		SOE	8
2073	819	Event 4		SOE	8
2081	821	Event 5		SOE	8
2089	829	Event 6		SOE	8
2097	831	Event 7		SOE	8
2105	839	Event 8		SOE	8
2113	841	Event 9		SOE	8
2121	849	Event 10		SOE	8
2129	851	Event 11		SOE	8
2137	859	Event 12		SOE	8
2145	861	Event 13		SOE	8
2153	869	Event 14		SOE	8
2161	871	Event 15		SOE	8
2169	879	Event 16		SOE	8
2177	881	Event 17		SOE	8
2185	889	Event 18		SOE	8
2193	891	Event 19		SOE	8
2201	899	Event 20		SOE	8
2209	8A1	Event 21		SOE	8
2217	8A9	Event 22		SOE	8
2225	8B1	Event 23		SOE	8
2233	8B9	Event 24		SOE	8
2241	8C1	Event 25		SOE	8
2249	8C9	Event 26		SOE	8
2257	8D1	Event 27		SOE	8
2265	8D9	Event 28		SOE	8

Table 9–3: DGP MODBUS MEMORY MAP (Sheet 3 of 24)

ADDRESS		ITEM NAME	UNITS	FORMAT	NO. OF REGISTERS
DEC	HEX				
2273	8E1	Event 29		SOE	8
2281	8E9	Event 30		SOE	8
2289	8F1	Event 31		SOE	8
2297	8F9	Event 32		SOE	8
2305	901	Event 33		SOE	8
2313	909	Event 34		SOE	8
2321	911	Event 35		SOE	8
2329	919	Event 36		SOE	8
2337	921	Event 37		SOE	8
2345	929	Event 38		SOE	8
2353	931	Event 39		SOE	8
2361	939	Event 40		SOE	8
2369	941	Event 41		SOE	8
2377	949	Event 42		SOE	8
2385	951	Event 43		SOE	8
2393	959	Event 44		SOE	8
2401	961	Event 45		SOE	8
2409	969	Event 46		SOE	8
2417	971	Event 47		SOE	8
2425	979	Event 48		SOE	8
2433	981	Event 49		SOE	8
2441	989	Event 50		SOE	8
2449	991	Event 51		SOE	8
2457	999	Event 52		SOE	8
2465	9A1	Event 53		SOE	8
2473	9A9	Event 54		SOE	8
2481	9B1	Event 55		SOE	8
2489	9B9	Event 56		SOE	8
2497	9C1	Event 57		SOE	8
2505	9C9	Event 58		SOE	8
2513	9D1	Event 59		SOE	8
2521	9D9	Event 60		SOE	8
2529	9E1	Event 61		SOE	8
2537	9E9	Event 62		SOE	8

Table 9–3: DGP MODBUS MEMORY MAP (Sheet 4 of 24)

ADDRESS		ITEM NAME	UNITS	FORMAT	NO. OF REGISTERS
DEC	HEX				
2545	9F1	Event 63		SOE	8
2553	9F9	Event 64		SOE	8
2561	A01	Event 65		SOE	8
2569	A09	Event 66		SOE	8
2577	A11	Event 67		SOE	8
2585	A19	Event 68		SOE	8
2593	A21	Event 69		SOE	8
2601	A29	Event 70		SOE	8
2609	A31	Event 71		SOE	8
2617	A39	Event 72		SOE	8
2625	A41	Event 73		SOE	8
2633	A49	Event 74		SOE	8
2641	A51	Event 75		SOE	8
2649	A59	Event 76		SOE	8
2657	A61	Event 77		SOE	8
2665	A69	Event 78		SOE	8
2673	A71	Event 79		SOE	8
2681	A79	Event 80		SOE	8
2689	A81	Event 81		SOE	8
2697	A89	Event 82		SOE	8
2705	A91	Event 83		SOE	8
2713	A99	Event 84		SOE	8
2721	AA1	Event 85		SOE	8
2729	AA9	Event 86		SOE	8
2737	AB1	Event 87		SOE	8
2745	AB9	Event 88		SOE	8
2753	AC1	Event 89		SOE	8
2761	AC9	Event 90		SOE	8
2769	AD1	Event 91		SOE	8
2777	AD9	Event 92		SOE	8
2785	AE1	Event 93		SOE	8
2793	AE9	Event 94		SOE	8
2801	AF1	Event 95		SOE	8
2809	AF9	Event 96		SOE	8

Table 9–3: DGP MODBUS MEMORY MAP (Sheet 5 of 24)

ADDRESS		ITEM NAME	UNITS	FORMAT	NO. OF REGISTERS
DEC	HEX				
2817	B01	Event 97		SOE	8
2825	B09	Event 98		SOE	8
2833	B11	Event 99		SOE	8
2841	B19	Event 100		SOE	8
FAULT STATUS					
3072	C00	Num Faults		INTO	1
3073	C01	Date & Time F1		DT0	7
3080	C08	Trip Type F1		INTO	1
3081	C09	Date and Time F2		DT0	7
3088	C10	Trip Type F2		INTO	1
3089	C11	Date and Time F3		DT0	7
3096	C18	Trip Type F3		INTO	1
FAULT REPORT					
4096	1000	Num Faults		INTO	1
4097	1001	Date&Time F1		DT0	7
4104	1008	Op Time F1	msec	LONG0	2
4106	100A	Fault Type F1		SP	1
4107	100B	Trip Type F1		SP	1
4108	100C	Prefault VA F1	VOLT	LONG1	2
4110	100E	Prefault VB F1	VOLT	LONG1	2
4112	1010	Prefault VC F1	VOLT	LONG1	2
4114	1012	Prefault IAS F1	AMP	LONG2	2
4116	1014	Prefault IBS F1	AMP	LONG2	2
4118	1016	Prefault ICS F1	AMP	LONG2	2
4120	1018	Prefault Watts F1	WATT	LONG1	2
4122	101A	Prefault Vars F1	VAR	LONG1	2
4124	101C	Prefault SysFreq F1	HZ	INT2	1
4125	101D	Fault VA	VOLT	LONG1	2
4127	101F	Fault VB	VOLT	LONG1	2
4129	1021	Fault VC	VOLT	LONG1	2
4131	1023	Fault VN	VOLT	LONG1	2
4133	1025	Fault IAS	AMP	LONG2	2
4135	1027	Fault IBS	AMP	LONG2	2
4137	1029	Fault ICS	AMP	LONG2	2

Table 9–3: DGP MODBUS MEMORY MAP (Sheet 6 of 24)

ADDRESS		ITEM NAME	UNITS	FORMAT	NO. OF REGISTERS
DEC	HEX				
4139	102B	Fault INS	AMP	LONG2	2
4141	102D	Fault IAR	AMP	LONG2	2
4143	102F	Fault IBR	AMP	LONG2	2
4145	1031	Fault ICR	AMP	LONG2	2
4147	1033	Fault INR	AMP	LONG2	2
4149	1035	SOE1 F1		SOE	8
4157	103D	SOE2 F1		SOE	8
4165	1045	SOE3 F1		SOE	8
4173	104D	SOE4 F1		SOE	8
4181	1055	SOE5 F1		SOE	8
4189	105D	SOE6 F1		SOE	8
4197	1065	SOE7 F1		SOE	8
4205	106D	SOE8 F1		SOE	8
4213	1075	SOE9 F1		SOE	8
4221	107D	SOE10 F1		SOE	8
4229	1085	SOE11 F1		SOE	8
4237	108D	SOE12 F1		SOE	8
4245	1095	SOE13 F1		SOE	8
4253	109D	SOE14 F1		SOE	8
4353	1101	Date&Time F2		DT0	7
4360	1108	Op Time F2	msec	LONG0	2
4362	110A	Fault Type F2		SP	1
4363	110B	Trip Type F2		SP	1
4364	110C	Prefault VA F2	VOLT	LONG1	2
4366	110E	Prefault VB F2	VOLT	LONG1	2
4368	1110	Prefault VC F2	VOLT	LONG1	2
4370	1112	Prefault IAS F2	AMP	LONG2	2
4372	1114	Prefault IBS F2	AMP	LONG2	2
4374	1116	Prefault ICS F2	AMP	LONG2	2
4376	1118	Prefault Watts F2	WATT	LONG1	2
4378	111A	Prefault Vars F2	VAR	LONG1	2
4380	111C	Prefault SysFreq F2	HZ	INT2	1
4381	111D	Fault VA	VOLT	LONG1	2
4383	111F	Fault VB	VOLT	LONG1	2

Table 9–3: DGP MODBUS MEMORY MAP (Sheet 7 of 24)

ADDRESS		ITEM NAME	UNITS	FORMAT	NO. OF REGISTERS
DEC	HEX				
4385	1121	Fault VC	VOLT	LONG1	2
4387	1123	Fault VN	VOLT	LONG1	2
4389	1125	Fault IAS	AMP	LONG2	2
4391	1127	Fault IBS	AMP	LONG2	2
4393	1129	Fault ICS	AMP	LONG2	2
4395	112B	Fault INS	AMP	LONG2	2
4397	112D	Fault IAR	AMP	LONG2	2
4399	112F	Fault IBR	AMP	LONG2	2
4401	1131	Fault ICR	AMP	LONG2	2
4403	1133	Fault INR	AMP	LONG2	2
4405	1135	SOE1 F2		SOE	8
4413	113D	SOE2 F2		SOE	8
4421	1145	SOE3 F2		SOE	8
4429	114D	SOE4 F2		SOE	8
4437	1155	SOE5 F2		SOE	8
4445	115D	SOE6 F2		SOE	8
4453	1165	SOE7 F2		SOE	8
4461	116D	SOE8 F2		SOE	8
4469	1175	SOE9 F2		SOE	8
4477	117D	SOE10 F2		SOE	8
4485	1185	SOE11 F2		SOE	8
4493	118D	SOE12 F2		SOE	8
4501	1195	SOE13 F2		SOE	8
4509	119D	SOE14 F2		SOE	8
4609	1201	Date&Time F3		DT0	7
4616	1208	Op Time F3	msec	LONG0	2
4618	120A	Fault Type F3		SP	1
4619	120B	Trip Type F3		SP	1
4620	120C	Prefault VA F3	VOLT	LONG1	2
4622	120E	Prefault VB F3	VOLT	LONG1	2
4624	1210	Prefault VC F3	VOLT	LONG1	2
4626	1212	Prefault IAS F3	AMP	LONG2	2
4628	1214	Prefault IBS F3	AMP	LONG2	2
4630	1216	Prefault ICS F3	AMP	LONG2	2

Table 9–3: DGP MODBUS MEMORY MAP (Sheet 8 of 24)

ADDRESS		ITEM NAME	UNITS	FORMAT	NO. OF REGISTERS
DEC	HEX				
4632	1218	Prefault Watts F3	WATT	LONG1	2
4634	121A	Prefault Vars F3	VAR	LONG1	2
4636	121C	Prefault SysFreq F3	HZ	INT2	1
4637	121D	Fault VA	VOLT	LONG1	2
4639	121F	Fault VB	VOLT	LONG1	2
4641	1221	Fault VC	VOLT	LONG1	2
4643	1223	Fault VN	VOLT	LONG1	2
4645	1225	Fault IAS	AMP	LONG2	2
4647	1227	Fault IBS	AMP	LONG2	2
4649	1229	Fault ICS	AMP	LONG2	2
4651	122B	Fault INS	AMP	LONG2	2
4653	122D	Fault IAR	AMP	LONG2	2
4655	122F	Fault IBR	AMP	LONG2	2
4657	1231	Fault ICR	AMP	LONG2	2
4659	1233	Fault INR	AMP	LONG2	2
4661	1235	SOE1 F3		SOE	8
4669	123D	SOE2 F3		SOE	8
4677	1245	SOE3 F3		SOE	8
4685	124D	SOE4 F3		SOE	8
4693	1255	SOE5 F3		SOE	8
4701	125D	SOE6 F3		SOE	8
4709	1265	SOE7 F3		SOE	8
4717	126D	SOE8 F3		SOE	8
4725	1275	SOE9 F3		SOE	8
4733	127D	SOE10 F3		SOE	8
4741	1285	SOE11 F3		SOE	8
4749	128D	SOE12 F3		SOE	8
4757	1295	SOE13 F3		SOE	8
4765	129D	SOE14 F3		SOE	8
OSCILLOGRAPHY SETTINGS					
5120	1400	Unit ID		INTO	1
5121	1401	SYS FREQ	HZ	INTO	1
5122	1402	SEL TVM		SP	1
5123	1403	SEL TCM		SP	1

Table 9–3: DGP MODBUS MEMORY MAP (Sheet 9 of 24)

ADDRESS		ITEM NAME	UNITS	FORMAT	NO. OF REGISTERS
DEC	HEX				
5124	1404	SELPRIM		BOOLEAN	1
5125	1405	CT RATIO		INTO	1
5126	1406	VT RATIO		INT1	1
5127	1407	COMMPORT		SP	1
5128	1408	Not Used			1
5129	1409	PHASE		BOOLEAN	1
5130	140A	TIMESYNC		SP	1
5131	140B	NUM FLTS		INTO	1
5132	140C	PREFLT		INTO	1
5133	140D	OSC TRIG		BOOLEAN	1
5134	140E	NOM VOLT	VOLT	INT1	1
5135	140F	RATEDCUR	AMP	INT2	1
5136	1410	VT CONN		BOOLEAN	1
5137	1411	87G TRIP		SP	1
5138	1412	87G ALARM		SP	1
5139	1413	87G K1	%	INT1	1
5140	1414	87G PICKUP	AMP	INT2	1
5141	1415	46A ALARM		SP	1
5142	1416	46A Pickup	AMP	INT2	1
5143	1417	46A TL14	SEC	INTO	1
5144	1418	46T TRIP		SP	1
5145	1419	46T ALARM		SP	1
5146	141A	46T PICKUP	AMP	INT2	1
5147	141B	46T K2	SEC	INT1	1
5148	141C	40-1 TRIP		SP	1
5149	141D	40-1 ALARM		SP	1
5150	141E	40-1 CENTER	OHM	INT2	1
5151	141F	40-1 RADIUS	OHM	INT2	1
5152	1420	40-1 TL12	SEC	INT2	1
5153	1421	40-2 TRIP		SP	1
5154	1422	40-2 ALARM		SP	1
5155	1423	40-2 CENTER	OHM	INT2	1
5156	1424	40-2 RADIUS	OHM	INT2	1
5157	1425	40-2 TL13	SEC	INT2	1

Table 9–3: DGP MODBUS MEMORY MAP (Sheet 10 of 24)

ADDRESS		ITEM NAME	UNITS	FORMAT	NO. OF REGISTERS
DEC	HEX				
5158	1426	32-1 TRIP		SP	1
5159	1427	32-1 ALARM		SP	1
5160	1428	32-1 SQ TR EN		LONG0	1
5161	1429	32- 1 REV PWR	WATT	INT1	1
5162	142A	32-1 TL1	SEC	INTO	1
5163	142B	AE ARM		BOOLEAN	1
5164	142C	32-2 TRIP		SP	1
5165	142D	32-2 ALARM		SP	1
5166	142E	32- 2 REV PWR	WATT	INT1	1
5167	142F	32-2 TL2	SEC	INTO	1
5168	1430	51V TRIP		SP	1
5169	1431	51V ALARM		SP	1
5170	1432	51V PICKUP	AMP	INT1	1
5171	1433	51V TIMEFAC	SEC	INT2	1
5172	1434	64G1 TRIP		SP	1
5173	1435	64G1 ALARM		SP	1
5174	1436	64G1 PICKUP	VOLT	INT1	1
5175	1437	64G1 TL4	SEC	INT1	1
5176	1438	64G2 TRIP		SP	1
5177	1439	64G2 ALARM		SP	1
5178	143A	64G2 TL5	SEC	INT1	1
5179	143B	24A ALARM		SP	1
5180	143C	24A PICKUP	PER UNIT	INT2	1
5181	143D	24A TL6	SEC	INT1	1
5182	143E	24T TRIP ON_line		SP	1
5183	143F	24T TRIP OFF-line		SP	1
5184	1440	24T ALARM		SP	1
5185	1441	24T CURVE #		INTO	1
5186	1442	24T INV PU	PER UNIT	INT2	1
5187	1443	24T TIME FAC	SEC	INT2	1
5188	1444	24T INST PU	PER UNIT	INT2	1
5189	1445	24T TL7	SEC	INT1	1
5190	1446	24T RESET	SEC	INTO	1
5191	1447	59 TRIP		SP	1

Table 9–3: DGP MODBUS MEMORY MAP (Sheet 11 of 24)

ADDRESS		ITEM NAME	UNITS	FORMAT	NO. OF REGISTERS
DEC	HEX				
5192	1448	59 ALARM		SP	1
5193	1449	59 INV PU	VOLT	INTO	1
5194	144A	59 TIME FAC	SEC	INT2	1
5195	144B	81 UV CUTOFF	%	INTO	1
5196	144C	81-1O TRIP		SP	1
5197	144D	81-1O ALARM		SP	1
5198	144E	81-1O SETPNT	HZ	INT2	1
5199	144F	81-1O TL15	SEC	INT2	1
5200	1450	81-2O TRIP		SP	1
5201	1451	81-2O ALARM		SP	1
5202	1452	81-2O SETPNT	HZ	INT2	1
5203	1453	81-2O TL16	SEC	INT2	1
5204	1454	Not Used			1
5205	1455	Not Used			1
5206	1456	Not Used			1
5207	1457	Not Used			1
5208	1458	Not Used			1
5209	1459	Not Used			1
5210	145A	Not Used			1
5211	145B	Not Used			1
5212	145C	81-1U TRIP		SP	1
5213	145D	81-1U ALARM		SP	1
5214	145E	81-1U SETPNT	HZ	INT2	1
5215	145F	81-1U TL8	SEC	INT1	1
5216	1460	81-2U TRIP		SP	1
5217	1461	81-2U ALARM		SP	1
5218	1462	81-2U SETPNT	HZ	INT2	1
5219	1463	81-2U TL9	SEC	INT2	1
5220	1464	81-3U TRIP		SP	1
5221	1465	81-3U ALARM		SP	1
5222	1466	81-3U SETPNT	HZ	INT2	1
5223	1467	81-3U TL10	SEC	INT2	1
5224	1468	81-4U TRIP		SP	1
5225	1469	81-4U ALARM		SP	1

Table 9–3: DGP MODBUS MEMORY MAP (Sheet 12 of 24)

ADDRESS		ITEM NAME	UNITS	FORMAT	NO. OF REGISTERS
DEC	HEX				
5226	146A	81-4U SETPNT	HZ	INT2	1
5227	146B	81-4U TL11	SEC	INT2	1
5228	146C	DIG INP SELBKD11		INTO	1
5229	146D	DI3 TRIP		SP	1
5230	146E	DI3 ALARM		SP	1
5231	146F	DI4 TRIP		SP	1
5232	1470	DI4 ALARM		SP	1
5233	1471	VTFF		BOOLEAN	1
5234	1472	40 SELV2SUP		BOOLEAN	1
5235	1473	AE TRIP		SP	1
5236	1474	AE ALARM		SP	1
5237	1475	27 TRIP		SP	1
5238	1476	27 ALARM		SP	1
5239	1477	27 PICKUP	VOLT	INTO	1
5240	1478	27 TIME FAC	SEC	INT2	1
5241	1479	27 CURVE #		INTO	1
5242	147A	51GN TRIP		SP	1
5243	147B	51GN ALARM		SP	1
5244	147C	51GN PICKUP	AMP	INT2	1
5245	147D	51GN TIME FAC	SEC	INT2	1
5246	147E	59 CURVE #		INTO	1
5247	147F	27TN TRIP		SP	1
5248	1480	27TN ALARM		SP	1
5249	1481	27TN PICKUP	VOLT	INT1	1
5250	1482	27TN TL20	SEC	INT1	1
5251	1483	27TN FORPWR_L	WATT	INTO	1
OSCILLOGRAPHY DATA					
5632	1600	IAS SAMP1	AMP	INT2	1
5633	1601	IBS SAMP1	AMP	INT2	1
5634	1602	ICS SAMP1	AMP	INT2	1
5635	1603	INS SAMP1	AMP	INT2	1
5636	1604	IAR AMP1	AMP	INT2	1
5637	1605	IBR SAMP1	AMP	INT2	1
5638	1606	ICR SAMP1	AMP	INT2	1

Table 9–3: DGP MODBUS MEMORY MAP (Sheet 13 of 24)

ADDRESS		ITEM NAME	UNITS	FORMAT	NO. OF REGISTERS
DEC	HEX				
5639	1607	INR SAMP1	AMP	INT2	1
5640	1608	VA SAMP1	VOLT	INT1	1
5641	1609	VB SAMP1	VOLT	INT1	1
5642	160A	VC SAMP1	VOLT	INT1	1
5643	160B	VN SAMP1	VOLT	INT1	1
5644	160C	DI SAMP1		SP	1
5645	160D	DO SAMP1		SP	1
5646	160E	PUFLG0 SAMP1		SP	1
5647	160F	PUFLG1 SAMP1		SP	1
5648	1610	PUFLG2 SAMP1		SP	1
5649	1611	PRFLG0 SAMP1		SP	1
5650	1612	PRFLG1 SAMP1		SP	1
5651	1613	PRFLG2 SAMP1		SP	1
5652	1614	SAMPPD SAMP1		SP	1
5653	1615	IAS SAMP2	AMP	INT2	1
5654	1616	IBS SAMP2	AMP	INT2	1
5655	1617	ICS SAMP2	AMP	INT2	1
5656	1618	INS SAMP2	AMP	INT2	1
5657	1619	IAR AMP2	AMP	INT2	1
5658	161A	IBR SAMP2	AMP	INT2	1
5659	161B	ICR SAMP2	AMP	INT2	1
5660	161C	INR SAMP2	AMP	INT2	1
5661	161D	VA SAMP2	VOLT	INT1	1
5662	161E	VB SAMP2	VOLT	INT1	1
5663	161F	VC SAMP2	VOLT	INT1	1
5664	1620	VN SAMP2	VOLT	INT1	1
5665	1621	DI SAMP2		SP	1
5666	1622	PUFLG0 SAMP2		SP	1
5667	1623	PUFLG1 SAMP2		SP	1
5668	1624	PUFLG2 SAMP2		SP	1
5669	1625	PUFLG2 SAMP2		SP	1
5670	1626	PRFLG0 SAMP2		SP	1
5671	1627	PRFLG1 SAMP2		SP	1
5672	1628	PRFLG2 SAMP2		SP	1

Table 9–3: DGP MODBUS MEMORY MAP (Sheet 14 of 24)

ADDRESS		ITEM NAME	UNITS	FORMAT	NO. OF REGISTERS
DEC	HEX				
5673	1629	SAMPPD SAMP2		SP	1
5674	162A	IAS SAMP3	AMP	INT2	1
5675	162B	IBS SAMP3	AMP	INT2	1
5676	162C	ICS SAMP3	AMP	INT2	1
5677	162D	INS SAMP3	AMP	INT2	1
5678	162E	IAR AMP3	AMP	INT2	1
5679	162F	IBR SAMP3	AMP	INT2	1
5680	1630	ICR SAMP3	AMP	INT2	1
5681	1631	INR SAMP3	AMP	INT2	1
5682	1632	VA SAMP3	VOLT	INT1	1
5683	1633	VB SAMP3	VOLT	INT1	1
5684	1634	VC SAMP3	VOLT	INT1	1
5685	1635	VN SAMP3	VOLT	INT1	1
5686	1636	DI SAMP3		SP	1
5687	1637	DO SAMP3		SP	1
5688	1638	PUFLG0 SAMP3		SP	1
5689	1639	PUFLG1 SAMP3		SP	1
5690	163A	PUFLG2 SAMP3		SP	1
5691	163B	PRFLG0 SAMP3		SP	1
5692	163C	PRFLG1 SAMP3		SP	1
5693	163D	PRFLG2 SAMP3		SP	1
5694	163E	SAMPPD SAMP3		SP	1
5695	163F	IAS SAMP4	AMP	INT2	1
5696	1640	IBS SAMP4	AMP	INT2	1
5697	1641	ICS SAMP4	AMP	INT2	1
5698	1642	INS SAMP4	AMP	INT2	1
5699	1643	IAR AMP4	AMP	INT2	1
5700	1644	IBR SAMP4	AMP	INT2	1
5701	1645	ICR SAMP4	AMP	INT2	1
5702	1646	INR SAMP4	AMP	INT2	1
5703	1647	VA SAMP4	VOLT	INT1	1
5704	1648	VB SAMP4	VOLT	INT1	1
5705	1649	VC SAMP4	VOLT	INT1	1
5706	164A	VN SAMP4	VOLT	INT1	1

Table 9–3: DGP MODBUS MEMORY MAP (Sheet 15 of 24)

ADDRESS		ITEM NAME	UNITS	FORMAT	NO. OF REGISTERS
DEC	HEX				
5707	164B	DI SAMP4		SP	1
5708	164C	DO SAMP4		SP	1
5709	164D	PUFLG0 SAMP4		SP	1
5710	164E	PUFLG1 SAMP4		SP	1
5711	164F	PUFLG2 SAMP4		SP	1
5712	1650	PRFLG0 SAMP4		SP	1
5713	1651	PRFLG1 SAMP4		SP	1
5714	1652	PRFLG2 SAMP4		SP	1
5715	1653	SAMPPD SAMP4		SP	1
5716	1654	IAS SAMP5	AMP	INT2	1
5717	1655	IBS SAMP5	AMP	INT2	1
5718	1656	ICS SAMP5	AMP	INT2	1
5719	1657	INS SAMP5	AMP	INT2	1
5720	1658	IAR AMP5	AMP	INT2	1
5721	1659	IBR SAMP5	AMP	INT2	1
5722	165A	ICR SAMP5	AMP	INT2	1
5723	165B	INR SAMP5	AMP	INT2	1
5724	165C	VA SAMP5	VOLT	INT1	1
5725	165D	VB SAMP5	VOLT	INT1	1
5726	165E	VC SAMP5	VOLT	INT1	1
5727	165F	VN SAMP5	VOLT	INT1	1
5728	1660	DI SAMP5		SP	1
5729	1661	DO SAMP5		SP	1
5730	1662	PUFLG0 SAMP5		SP	1
5731	1663	PUFLG1 SAMP5		SP	1
5732	1664	PUFLG2 SAMP5		SP	1
5733	1665	PRFLG0 SAMP5		SP	1
5734	1666	PRFLG1 SAMP5		SP	1
5735	1667	PRFLG2 SAMP5		SP	1
5736	1668	SAMPPD SAMP5		SP	1
5737	1669	IAS SAMP6	AMP	INT2	1
5738	166A	IBS SAMP6	AMP	INT2	1
5739	166B	ICS SAMP6	AMP	INT2	1
5740	166C	INS SAMP6	AMP	INT2	1

Table 9–3: DGP MODBUS MEMORY MAP (Sheet 16 of 24)

ADDRESS		ITEM NAME	UNITS	FORMAT	NO. OF REGISTERS
DEC	HEX				
5741	166D	IAR AMP6	AMP	INT2	1
5742	166E	IBR SAMP6	AMP	INT2	1
5743	166F	ICR SAMP6	AMP	INT2	1
5744	1670	INR SAMP6	AMP	INT2	1
5745	1671	VA SAMP6	VOLT	INT1	1
5746	1672	VB SAMP6	VOLT	INT1	1
5747	1673	VC SAMP6	VOLT	INT1	1
5748	1674	VN SAMP6	VOLT	INT	1
5749	1675	DI SAMP6		SP	1
5750	1676	DO SAMP6		SP	1
5751	1677	PUFLG0 SAMP6		SP	1
5752	1678	PUFLG1 SAMP6		SP	1
5753	1679	PUFLG2 SAMP6		SP	1
5754	167A	PRFLG0 SAMP6		SP	1
5755	167B	PRFLG1 SAMP6		SP	1
5756	167C	PRFLG2 SAMP6		SP	1
5757	167D	SAMPPD SAMP6		SP	1
5758	167E	IAS SAMP7	AMP	INT2	1
5759	167F	IBS SAMP7	AMP	INT2	1
5760	1680	ICS SAMP7	AMP	INT2	1
5761	1681	INS SAMP7	AMP	INT2	1
5762	1682	IAR AMP7	AMP	INT2	1
5763	1683	IBR SAMP7	AMP	INT2	1
5764	1684	ICR SAMP7	AMP	INT2	1
5765	1685	INR SAMP7	AMP	INT2	1
5766	1686	VA SAMP7	VOLT	INT1	1
5767	1687	VB SAMP7	VOLT	INT1	1
5768	1688	VC SAMP7	VOLT	INT1	1
5769	1689	VN SAMP7	VOLT	INT1	1
5770	168A	DI SAMP7		SP	1
5771	168B	DO SAMP7		SP	1
5772	168C	PUFLG0 SAMP7		SP	1
5773	168D	PUFLG1 SAMP7		SP	1
5774	168E	PUFLG2 SAMP7		SP	1

Table 9–3: DGP MODBUS MEMORY MAP (Sheet 17 of 24)

ADDRESS		ITEM NAME	UNITS	FORMAT	NO. OF REGISTERS
DEC	HEX				
5775	168F	PRFLG0 SAMP7		SP	1
5776	1690	PRFLG1 SAMP7		SP	1
5777	1691	PRFLG2 SAMP7		SP	1
5778	1692	SAMPPD SAMP7		SP	1
5779	1693	IAS SAMP8	AMP	INT2	1
5780	1694	IBS SAMP8	AMP	INT2	1
5781	1695	ICS SAMP8	AMP	INT2	1
5782	1696	INS SAMP8	AMP	INT2	1
5783	1697	IAR AMP8	AMP	INT2	1
5784	1698	IBR SAMP8	AMP	INT2	1
5785	1699	ICR SAMP8	AMP	INT2	1
5786	169A	INR SAMP8	AMP	INT2	1
5787	169B	VA SAMP8	VOLT	INT1	1
5788	169C	VB SAMP8	VOLT	INT1	1
5789	169D	VC SAMP8	VOLT	INT1	1
5790	169E	VN SAMP8	VOLT	INT1	1
5791	169F	DI SAMP8		SP	1
5792	16A0	DO SAMP8		SP	1
5793	16A1	PUFLG0 SAMP8		SP	1
5794	16A2	PUFLG1 SAMP8		SP	1
5795	16A3	PUFLG2 SAMP8		SP	1
5796	16A4	PRFLG0 SAMP8		SP	1
5797	16A5	PRFLG1 SAMP8		SP	1
5798	16A6	PRFLG2 SAMP8		SP	1
5799	16A7	SAMPPD SAMP8		SP	1
5800	16A8	IAS SAMP9	AMP	INT2	1
5801	16A9	IBS SAMP9	AMP	INT2	1
5802	16AA	ICS SAMP9	AMP	INT2	1
5803	16AB	INS SAMP9	AMP	INT2	1
5804	16AC	IAR AMP9	AMP	INT2	1
5805	16AD	IBR SAMP9	AMP	INT2	1
5806	16AE	ICR SAMP9	AMP	INT2	1
5807	16AF	INR SAMP9	AMP	INT2	1
5808	16B0	VA SAMP9	VOLT	INT1	1

Table 9–3: DGP MODBUS MEMORY MAP (Sheet 18 of 24)

ADDRESS		ITEM NAME	UNITS	FORMAT	NO. OF REGISTERS
DEC	HEX				
5809	16B1	VB SAMP9	VOLT	INT1	1
5810	16B2	VC SAMP9	VOLT	INT1	1
5811	16B3	VN SAMP9	VOLT	INTO	1
5812	16B4	DI SAMP9		SP	1
5813	16B5	DO SAMP9		SP	1
5814	16B6	PUFLG0 SAMP9		SP	1
5815	16B7	PUFLG1 SAMP9		SP	1
5816	16B8	PUFLG2 SAMP9		SP	1
5817	16B9	PRFLG0 SAMP9		SP	1
5818	16BA	PRFLG1 SAMP9		SP	1
5819	16BB	PRFLG2 SAMP9		SP	1
5820	16BC	SAMPPD SAMP9		SP	1
5821	16BD	IAS SAMP10	AMP	INT2	1
5822	16BE	IBS SAMP10	AMP	INT2	1
5823	16BF	ICS SAMP10	AMP	INT2	1
5824	16C0	INS SAMP10	AMP	INT2	1
5825	16C1	IAR AMP10	AMP	INT2	1
5826	16C2	IBR SAMP10	AMP	INT2	1
5827	16C3	ICR SAMP10	AMP	INT2	1
5828	16C4	INR SAMP10	AMP	INT2	1
5829	16C5	VA SAMP10	VOLT	INT1	1
5830	16C6	VB SAMP10	VOLT	INT1	1
5831	16C7	VC SAMP10	VOLT	INT1	1
5832	16C8	VN SAMP10	VOLT	INT1	1
5833	16C9	DI SAMP10		SP	1
5834	16CA	DO SAMP10		SP	1
5835	16CB	PUFLG0 SAMP10		SP	1
5836	16CC	PUFLG1 SAMP11		SP	1
5837	16CD	PUFLG2 SAMP10		SP	1
5838	16CE	PRFLG0 SAMP10		SP	1
5839	16CF	PRFLG1 SAMP10		SP	1
5840	16D0	PRFLG2 SAMP10		SP	1
5841	16D1	SAMPPD SAMP10		SP	1
5842	16D2	IAS SAMP11	AMP	INT2	1

Table 9–3: DGP MODBUS MEMORY MAP (Sheet 19 of 24)

ADDRESS		ITEM NAME	UNITS	FORMAT	NO. OF REGISTERS
DEC	HEX				
5843	16D3	IBS SAMP11	AMP	INT2	1
5844	16D4	ICS SAMP11	AMP	INT2	1
5845	16D5	INS SAMP11	AMP	INT2	1
5846	16D6	IAR AMP11	AMP	INT2	1
5847	16D7	IBR SAMP11	AMP	INT2	1
5848	16D8	ICR SAMP11	AMP	INT2	1
5849	16D9	INR SAMP11	AMP	INT2	1
5850	16DA	VA SAMP11	VOLT	INT1	1
5851	16DB	VB SAMP11	VOLT	INT1	1
5852	16DC	VC SAMP11	VOLT	INT1	1
5853	16DD	VN SAMP11	VOLT	INT1	1
5854	16DE	DI SAMP11		SP	1
5855	16DF	DO SAMP11		SP	1
5856	16E0	PUFLG0 SAMP11		SP	1
5857	16E1	PUFLG1 SAMP11		SP	1
5858	16E2	PUFLG2 SAMP11		SP	1
5859	16E3	PRFLG0 SAMP11		SP	1
5860	16E4	PRFLG1 SAMP11		SP	1
5861	16E5	PRFLG2 SAMP11		SP	1
5862	16E6	SAMPPD SAMP11		SP	1
5863	16E7	IAS SAMP12	AMP	INT2	1
5864	16E8	IBS SAMP12	AMP	INT2	1
5865	16E9	ICS SAMP12	AMP	INT2	1
5866	16EA	INS SAMP12	AMP	INT2	1
5867	16EB	IAR AMP12	AMP	INT2	1
5868	16EC	IBR SAMP12	AMP	INT2	1
5869	16ED	ICR SAMP12	AMP	INT2	1
5870	16EE	INR SAMP12	AMP	INT2	1
5871	16EF	VA SAMP12	VOLT	INT1	1
5872	16F0	VB SAMP12	VOLT	INT1	1
5873	16F1	VC SAMP12	VOLT	INT1	1
5874	16F2	VN SAMP12	VOLT	INT1	1
5875	16F3	DI SAMP12		SP	1
5876	16F4	DO SAMP12		SP	1

Table 9–3: DGP MODBUS MEMORY MAP (Sheet 20 of 24)

ADDRESS		ITEM NAME	UNITS	FORMAT	NO. OF REGISTERS
DEC	HEX				
5877	16F5	PUFLG0 SAMP12		SP	1
5878	16F6	PUFLG1 SAMP12		SP	1
5879	16F7	PUFLG2 SAMP12		SP	1
5880	16F8	PRFLG0 SAMP12		SP	1
5881	16F9	PRFLG1 SAMP12		SP	1
5882	16FA	PRFLG2 SAMP12		SP	1
5883	16FB	SAMPPD SAMP12		SP	1
OSCILLOGRAPHY CONTROL REGISTERS					
6142	17FE	Cycle Number		INTO	1
6143	17FF	Fault Number		INTO	1
DGP STATUS					
6144	1800	SSP STAT		SP	1
6145	1801	DAP STAT		SP	1
6146	1802	DSP1 STAT		SP	1
6147	1803	DSP2 STAT		SP	1
6148	1804	DSP3 STAT		SP	1
6149	1805	ANI STAT		SP	1
6150	1806	MMI STAT		SP	1
6151	1807	MGM1 STAT		SP	1
6152	1808	MGM2 STAT		SP	1
6153	1809	DIT STAT		SP	1
6154	180A	PWR1 STAT		SP	1
6155	180B	PWR2 STAT		SP	1
6156	180C	MISC STAT		SP	1
MMI PASSWORDS					
7168	1C00	MASTER PSW		ASCII	16
7184	1C10	SETT PSW		ASCII	16
SETTINGS					
16384	4000	Unit ID		INTO	1
16385	4001	SYS FREQ	HZ	INTO	1
16386	4002	SEL TVM		SP	1
16387	4003	SEL TCM		SP	1
16388	4004	SELPRIM		BOOLEAN	1
16389	4005	CT RATIO		INTO	1

Table 9–3: DGP MODBUS MEMORY MAP (Sheet 21 of 24)

ADDRESS		ITEM NAME	UNITS	FORMAT	NO. OF REGISTERS
DEC	HEX				
16390	4006	VT RATIO		INT1	1
16391	4007	COMMPORT		SP	1
16392	4008	PHASE		BOOLEAN	1
16393	4009	TIMESYNC		SP	1
16394	400A	NUM FLTS		INTO	1
16395	400B	PREFLT		INTO	1
16396	400C	OSC TRIG		BOOLEAN	1
16397	400D	NOM VOLT	VOLT	INT1	1
16398	400E	RATEDCUR	AMP	INT2	1
16399	400F	VT CONN		BOOLEAN	1
16400	4010	NCTRATIO		INTO	1
16640	4100	87G TRIP		SP	1
16641	4101	87G ALARM		SP	1
16642	4102	87G K1	%	INT1	1
16643	4103	87G PICKUP	AMP	INT2	1
16896	4200	46A ALARM		SP	1
16897	4201	46A Pickup	AMP	INT2	1
16898	4202	46A TL14	SEC	INTO	1
17152	4300	46T TRIP		SP	1
17153	4301	46T ALARM		SP	1
17154	4302	46T PICKUP	AMP	INT2	1
17155	4303	46T K2	SEC	INT1	1
17408	4400	40 SELV2SUP		BOOLEAN	1
17664	4500	40-1 TRIP		SP	1
17665	4501	40-1 ALARM		SP	1
17666	4502	40-1 CENTER	OHM	INT2	1
17667	4503	40-1 RADIUS	OHM	INT2	1
17668	4504	40-1 TL12	SEC	INT2	1
17920	4600	40-2 TRIP		SP	1
17921	4601	40-2 ALARM		SP	1
17922	4601	40-2 CENTER	OHM	INT2	1
17923	4602	40-2 RADIUS	OHM	INT2	1
17924	4603	40-2 TL13	SEC	INT2	1
18176	4700	32-1 TRIP		SP	1

Table 9–3: DGP MODBUS MEMORY MAP (Sheet 22 of 24)

ADDRESS		ITEM NAME	UNITS	FORMAT	NO. OF REGISTERS
DEC	HEX				
18177	4701	32-1 ALARM		SP	1
18178	4702	32-1 SQ TR EN		LONG0	1
18179	4703	32- 1 REV PWR	WATT	INT1	1
18180	4704	32-1 TL1	SEC	INTO	1
18432	4800	32-2 TRIP		SP	1
18433	4801	32-2 ALARM		SP	1
18434	4802	32- 2 REV PWR	WATT	INT1	1
18435	4803	32-2 TL2	SEC	INTO	1
18688	4900	51V TRIP		SP	1
18689	4901	51V ALARM		SP	1
18690	4902	51V PICKUP	AMP	INT1	1
18691	4903	51V TIMEFAC	SEC	INT2	1
18944	4A00	64G1 TRIP		SP	1
18945	4A01	64G1 ALARM		SP	1
18946	4A02	64G1 PICKUP	VOLT	INT1	1
18947	4A03	64G1 TL4	SEC	INT1	1
19200	4B00	64G2 TRIP		SP	1
19201	4B01	64G2 ALARM		SP	1
19202	4B02	64G2 TL5	SEC	INT1	1
19456	4C00	24A ALARM		SP	1
19457	4C01	24A PICKUP	PER UNIT	INT2	1
19458	4C02	24A TL6	SEC	INT1	1
19712	4D00	24T TRIP ON_line		SP	1
19713	4D01	24T TRIP OFF-line		SP	1
19714	4D02	24T ALARM		SP	1
19715	4D03	24T CURVE #		INTO	1
19716	4D04	24T INV PU	PER UNIT	INT2	1
19717	4D05	24T TIME FAC	SEC	INT2	1
19718	4D06	24T INST PU	PER UNIT	INT2	1
19719	4D07	24T TL7	SEC	INT1	1
19720	4D08	24T RESET	SEC	INTO	1
19968	4E00	59 TRIP		SP	1
19969	4E01	59 ALARM		SP	1
19970	4E02	59 INV PU	VOLT	INTO	1

Table 9–3: DGP MODBUS MEMORY MAP (Sheet 23 of 24)

ADDRESS		ITEM NAME	UNITS	FORMAT	NO. OF REGISTERS
DEC	HEX				
19971	4E03	59 TIME FAC	SEC	INT2	1
19972	4E04	59 CURVE #		INTO	1
19973	4E05	59 INST PU	VOLT	INTO	1
20224	4F00	81 UV CUTOFF	%	INTO	1
20480	5000	81-1U TRIP		SP	1
20481	5001	81-1U ALARM		SP	1
20482	5002	81-1U SETPNT	HZ	INT2	1
20483	5003	81-1U TL8	SEC	INT1	1
20736	5100	81-2U TRIP		SP	1
20737	5101	81-2U ALARM		SP	1
20738	5102	81-2U SETPNT	HZ	INT2	1
20739	5103	81-2U TL9	SEC	INT2	1
20992	5200	81-3U TRIP		SP	1
20993	5201	81-3U ALARM		SP	1
20994	5202	81-3U SETPNT	HZ	INT2	1
20995	5203	81-3U TL10	SEC	INT2	1
21248	5300	81-4U TRIP		SP	1
21249	5301	81-4U ALARM		SP	1
21250	5302	81-4U SETPNT	HZ	INT2	1
21251	5303	81-4U TL11	SEC	INT2	1
21504	5400	81-1O TRIP		SP	1
21505	5401	81-1O ALARM		SP	1
21506	5402	81-1O SETPNT	HZ	INT2	1
21507	5403	81-1O TL15	SEC	INT2	1
21760	5500	81-2O TRIP		SP	1
21761	5501	81-2O ALARM		SP	1
21762	5502	81-2O SETPNT	HZ	INT2	1
21763	5503	81-2O TL16	SEC	INT2	1
22016	5600	81-3O TRIP		SP	1
22017	5601	81-3O ALARM		SP	1
22018	5602	81-3O SETPNT	HZ	INT2	1
22019	5603	81-3O TL17	SEC	INT2	1
22272	5700	81-4O TRIP		SP	1
22273	5701	81-4O ALARM		SP	1

Table 9–3: DGP MODBUS MEMORY MAP (Sheet 24 of 24)

ADDRESS		ITEM NAME	UNITS	FORMAT	NO. OF REGISTERS
DEC	HEX				
22274	5702	81-4O SETPNT	HZ	INT2	1
22275	5703	81-4O TL18	SEC	INT2	1
22528	5800	DIG INP SELBKD11		INTO	1
22529	5801	DI3 TRIP		SP	1
22530	5802	DI3 ALARM		SP	1
22531	5803	DI3 TIMER	SEC	INT2	1
22532	5804	DI4 TRIP		SP	1
22533	5805	DI4 ALARM		SP	1
22534	5806	DI4 TIMER	SEC	INT2	1
22535	5807	DI6 FUNC		BOOLEAN	1
22784	5900	VTFF		BOOLEAN	1
23040	5A00	AE TRIP		SP	1
23041	5A01	AE ALARM		SP	1
23042	5A02	AE ARM		BOOLEAN	1
23296	5B00	51GN TRIP		SP	1
23297	5B01	51GN ALARM		SP	1
23298	5B02	51GN PICKUP	AMP	INT2	1
23299	5B03	51GN TIME FAC	SEC	INT2	1
23552	5C00	27 TRIP		SP	1
23553	5C01	27 ALARM		SP	1
23554	5C02	27 PICKUP	VOLT	INTO	1
23555	5C03	27 TIME FAC	SEC	INT2	1
23556	5C04	27 CURVE #		INTO	1
23808	5D00	27TN TRIP		SP	1
23809	5D01	27TN ALARM		SP	1
23810	5D02	27TN PICKUP	VOLT	INT1	1
23811	5D03	27TN TL20	SEC	INT1	1
23812	5D04	27TN FORPWR_L	WATT	INTO	1
23813	5D05	27TN FORPWR_H	WATT	INTO	1
GENERATOR AND STATION ID					
32256	7E00	STATION ID		ASCII	32
32288	7E20	GENERATOR ID		ASCII	32

9.6.1 DESCRIPTION

The following coil commands are accepted by the DGP relay. Multiple commands are not supported. They can be executed only by the function code 05H. Both the hexadecimal and decimal coil addresses are offset.

Table 9–4: COIL COMMANDS

ADDRESS		COIL COMMAND
DEC	HEX	
0	0	END COMMAND*
1	1	ENABLE OUTPUT
1	1	DISABLE OUTPUT
2	2	RESET FAULT
3	3	RESET EVENTS
4	4	RESET TARGET
100	64	END RELAY TEST
101	65	RELAY TEST 87G
102	66	RELAY TEST 46A
103	67	RELAY TEST 46T
104	68	RELAY TEST 40-1
105	69	RELAY TEST 40-2
106	6A	RELAY TEST 32-1
107	6B	RELAY TEST 32-2
108	6C	RELAY TEST 51V
109	6D	RELAY TEST 64G1
110	6E	RELAY TEST 64G2
111	6F	RELAY TEST 24A
112	70	RELAY TEST 24T
113	71	RELAY TEST 59
114	72	RELAY TEST 81-1U
115	73	RELAY TEST 81-2U
116	74	RELAY TEST 81-3U
117	75	RELAY TEST 81-4U

Table 9–4: COIL COMMANDS

ADDRESS		COIL COMMAND
DEC	HEX	
118	76	RELAY TEST 81-1O
119	77	RELAY TEST 81-2O
120	78	RELAY TEST VTFF
121	79	RELAY TEST AE
122	7A	RELAY TEST 51GN
123	7B	RELAY TEST 27
124	7C	RELAY TEST 27TN
200	C8	END DO TEST
201	C9	DO TEST 94G
202	CA	DO TEST 94G1
203	CB	DO TEST 94G2
204	CC	DO TEST 94G3
205	CD	DO TEST 74A
206	CE	DO TEST 74B
207	CF	DO TEST 74C
208	D0	DO TEST 74D
209	D1	DO TEST 74CR
210	D2	DO TEST 74NC
211	D3	DO TEST 74FF
300	12C	TRIB BRKR 94G
301	12D	TRIB BRKR 94G1
302	12E	TRIB BRKR 94G2
303	12F	TRIB BRKR 94G3

***** END COMMAND must be sent after new settings are sent to the DGP.

9.7.1 DESCRIPTION

Normally the user can change the settings only if the settings that are in the relay are not corrupted. In a brand new relay the contents of the EEPROM are undefined. Therefore the factory settings command should be used to program the relay.

The factory command will be executed when the master sends the command with a slave address 0FFH (255 decimal). Note that slave address 255 is not a valid modbus slave address and is being used by the relay only for GE internal factory commands.

The DGP relay will not respond to a CRC failure, if the slave address is 255. When the relay is placed in multi-drop configuration, it possible to receive a slave ID of 255, due to some communication error. Therefore the relay will not respond.

The only function IDs supported in Factory command are 10H, 06H, and 05H with a coil address corresponding to the END (29H).

The factory settings are down loaded in three groups.

- Settings
- Station and Generator ID
- Model Number

After the factory settings are downloaded, the MASTER should send a END command with slave address 255 to make the changes effective.

The Settings and Station Generator ID will have the same register map as described in previous sections. The model number can be written into registers 0000 to 000FH. Normally the model number registers are Read Only registers. The only exception where they can be written are with factory commands.

10.1.1 OVERVIEW

The Settings and Station Generator ID will have the same register map as described in previous sections. The model number can be written into registers 0000 to 000FH. Normally the model number registers are Read Only registers. The only exception where they can be written are by. using factory command

10.1.2 SYSTEM REQUIREMENTS

a) HARDWARE

- Minimum: X86 – based PC (Pentium or higher is recommended).
- **High performance multiple serial port board. The driver for the serial board should be pre-installed and configured (the system has been tested with the Equinox AT serial interface boards and also with the standard COMM ports of the PC).**
- **If a modem is used, it should be installed and the driver should be TAPI compatible.**

b) SOFTWARE

- Windows NT 4.0 (SP 3 or later) *or* Windows 95/98.
- Minimum of 32 MB RAM.
- If a modem is used for communications, the modem driver must be installed and functional.
- PKZip software for DGP-PC file extraction.

10.1.3 INSTALLATION

1. Insert the GE Multilin Products CD into your local CD-ROM drive or point your web browser to the GE Multilin website at www.GEindustrial.com/pm. Under Windows 95/98, the Products CD will automatically launch the welcome screen. Since the Products CD is essentially a “snapshot” of the GE Multilin website, the installation procedures from the CD and the web are identical.
2. Click the Index by Product Name item from the main page and select DGP Digital Generator Protection from the products list to open the DGP products page.
3. Click the Software item from the Product Resources list to go to the DGP software page.
4. The latest version of DGP-PC will be listed, along with additional installation instructions and release notes. Click on the DGP-PC Version 2.0 (supports DGP) menu item to download the installation program to your local PC. Run the installation program and follow the prompts to install the software in the desired directory. When completed, a new GE Multilin group window will appear containing the DGP-PC icon.

10.2.1 PROTECTION JUMPERS

In order to have complete remote control of the unit, the factory-installed jumpers J1 and J2 of the MMI module must be removed. Installing J1 disables remote closing of all of the output relays. Installing J2 disables all remote setting changes and the disable/enable of outputs (see Figure 3–4: DGP MMI MODULE on page 3–5).

10.2.2 DGP-PC USER INTERFACE

All user actions are classified into these categories.

- Adding/Modifying/Deleting a Site (Location).
- Adding/Modifying/Deleting an IED.
- Modes of operation.
- Connecting to and disconnecting to an IED.
- Retrieving information from an IED.
- Read/Send setting changes from/to IED.
- Send control commands to IED.
- Copy/Paste/Print Settings.

10.2.3 ADDING/MODIFYING A SITE (LOCATION)

The diagram below shows how to add a new Location.

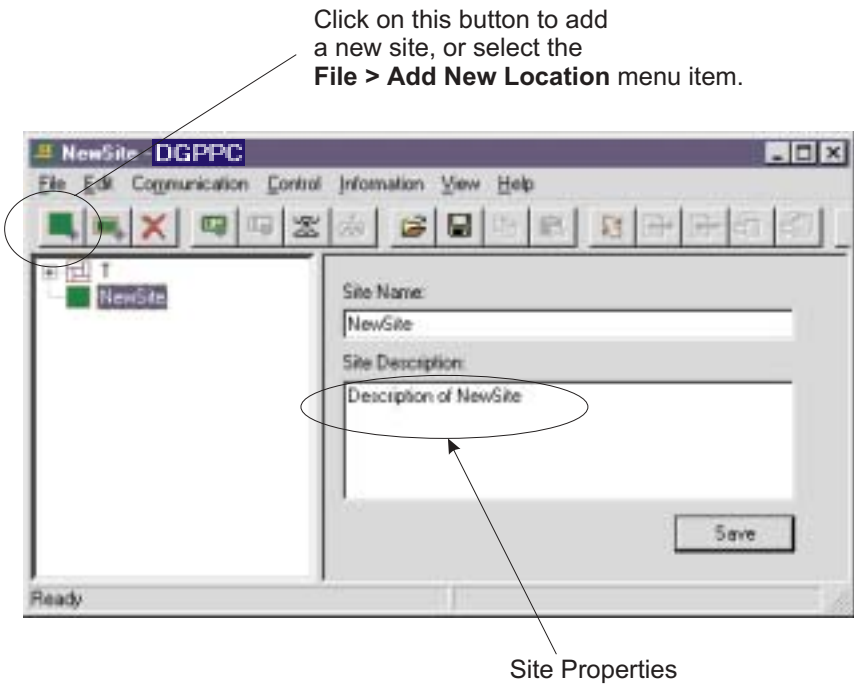

After adding, click the **Save** button to save the site in the database. To modify the properties of the site, click on the site and change the name / description and then click the **Save** button.

To delete a site:

1. Delete all IEDs associated with that site.
2. Select the Site and click the **Delete** button or the Delete menu icon (shown in the diagram below).

The diagram below shows how to delete a site.

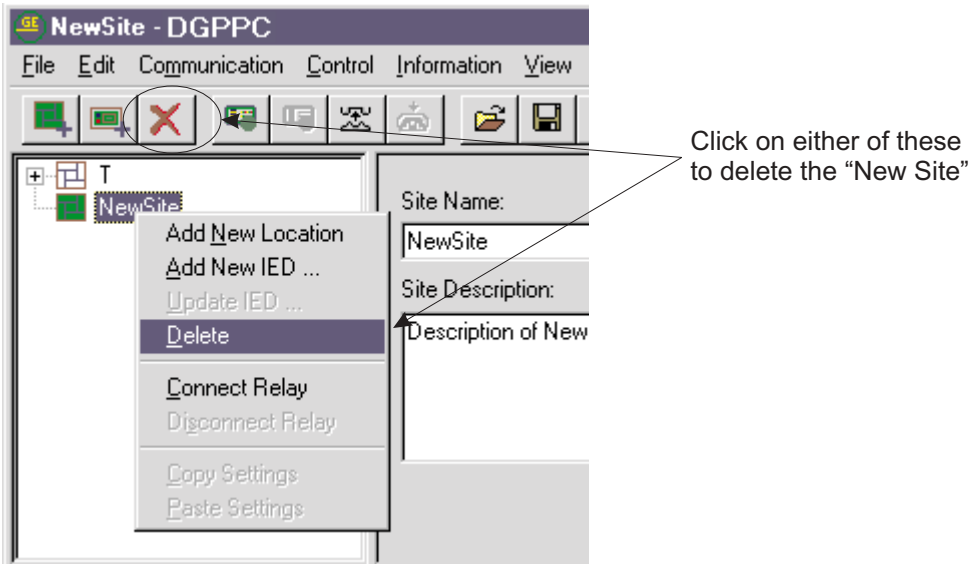

10.3.1 SERIAL CONNNECTION

1. Click the Connect to Relay menu icon or select the **Communication > Connect Relay** menu item.

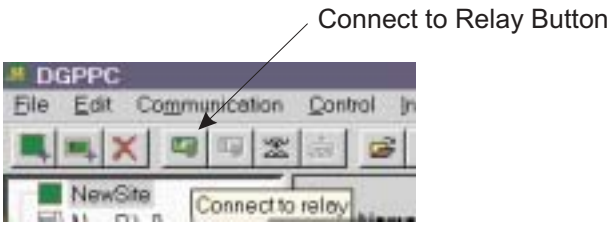

2. If prompted for a password, enter the password appropriate to the desired access level and click **OK**.
3. To disconnect, click on the **Disconnect** button.

NOTE

If an incorrect password is entered on three consecutive tries using DGP-PC, the DGP will display "WARN 60" and the 74NC relay will operate. To remove this condition, the user must log in and log out correctly using DGP-PC.

10.3.2 MODEM CONNECTION

1. Click on Make Call menu icon or select the **Communication > MakeCall** menu item.

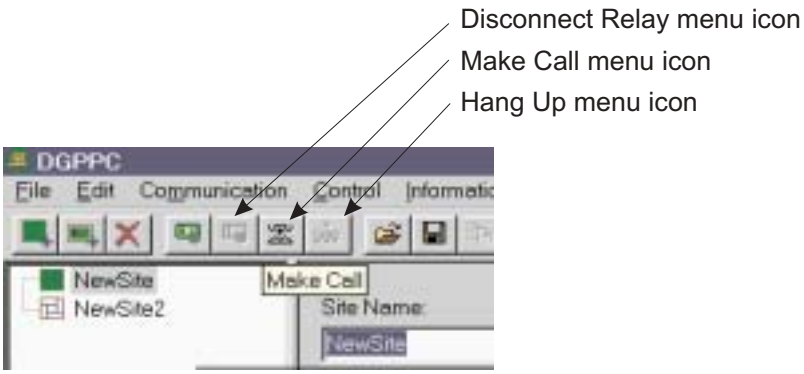

2. Enter the telephone number in the prompted dialog box and click **OK**.
3. DGP-PC will try to make the telephone connection with the remote modem. If the modem connection is successful, click the Connect to Relay menu icon or select the **Communication > Connect Relay** menu item.
4. If prompted for a password, enter the appropriate password for the desired access level and click **OK**.
5. To disconnect, click on the Disconnect Relay icon or select the **Communication > Disconnect Relay** menu item.
6. To hang up click on the Hang Up icon or select the **Communication > Hangup** menu item.

NOTE

After disconnecting one relay, the user can connect to another relay on the same telephone line without hanging up the telephone connection.

10.3.3 IED MODES

A mode is the current state of the IED. The mode indicates whether the IED is connected or not, and if connected, the access level of the connection.

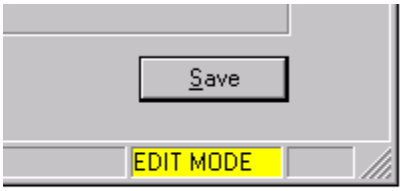

The mode of the selected IED will be displayed on the right bottom corner of the status bar pane.

The possible modes are:

- EDIT MODE: When the IED is in disconnected mode.
- VIEW MODE: When the IED is connected with the access level – VIEW.
- SETT MODE: When the IED is connected with the access level – SETTINGS.
- CTRL MODE: When the IED is connected with the access level – CONTROL.

10.3.4 ADDING/MODYFYING AN IED

a) ADDING AN IED

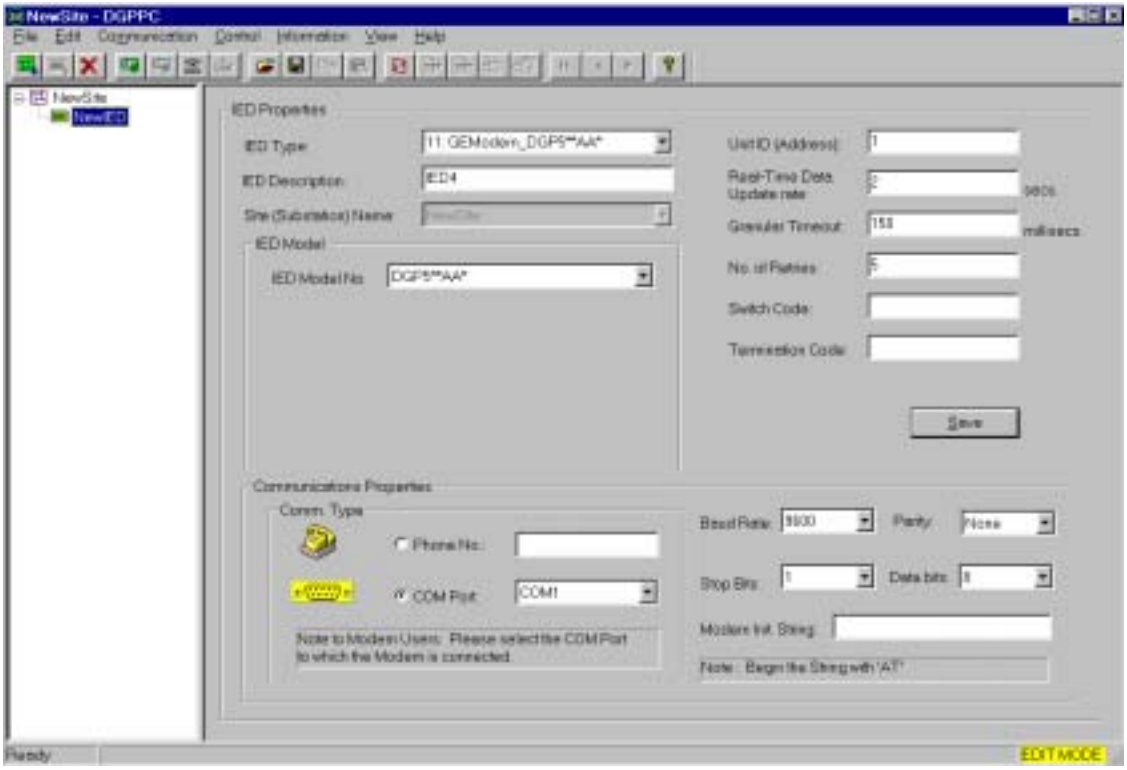

Figure 10–1: IED PROPERTIES WINDOW

1. For any IED Type (except DGP with Modbus communication) the user must enter all three passwords (Settings, View, and Control). Remote passwords can be obtained from the MMI and decoded to get the **Settings Password**, **Control Password**, and **View Password**.

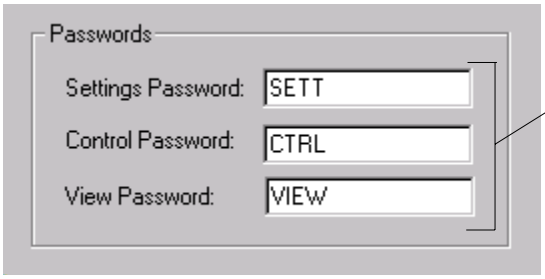

2. If a switch is being used as a multiplexer to have multiple IEDs on the same port, the **Switch Code** and **Termination Code** need to be entered. These codes are dependent on the switch being used. If no switches being used, leave them blank.
3. The **Phone No** must be entered *without* any spaces or hyphens between the digits. Also, the complete number (including any long distance prefixes) needs to be entered. When using a modem line, enter the telephone number of the modem connected to the relay.
4. The PC modem **COM Port** (where DGP-PC is running) must be entered even when using a modem.
5. Optionally, the **Modem INIT String** can be used to initialize the modem. The INIT string should be constructed using the modem setting commands.
6. Click the **Save** button to save the IED. DGP-PC will populate the Information, Settings and Operations branches under the IED in the Tree.

b) MODIFYING IED PROPERTIES

1. The IED must be placed in the Disconnected STATE or EDIT MODE.
2. Make any necessary changes as shown earlier.
3. Click the **Save** button to save the changes.

c) DELETING AN IED

1. The IED must be placed in the Disconnected state or EDIT MODE.
2. Select the appropriate IED to be deleted.
3. Click the Delete icon or select the **File > Delete Menu** menu item.

10.3.5 RETREIVING INFORMATION

1. When connected to an IED, DGP-PC retreives Settings and non-settings information.
2. Click on a specific category in the Tree *directly after the connection is established*. DGP-PC retrieves the data from the IED.
3. Subsequent access to a specific setting only shows the information last retreived. To view the most updated Settings information, click the Settings category then the Refresh icon (or select the **Edit > Refresh** menu item). DGP-PC reads the latest setting changes and updates the Settings screen.

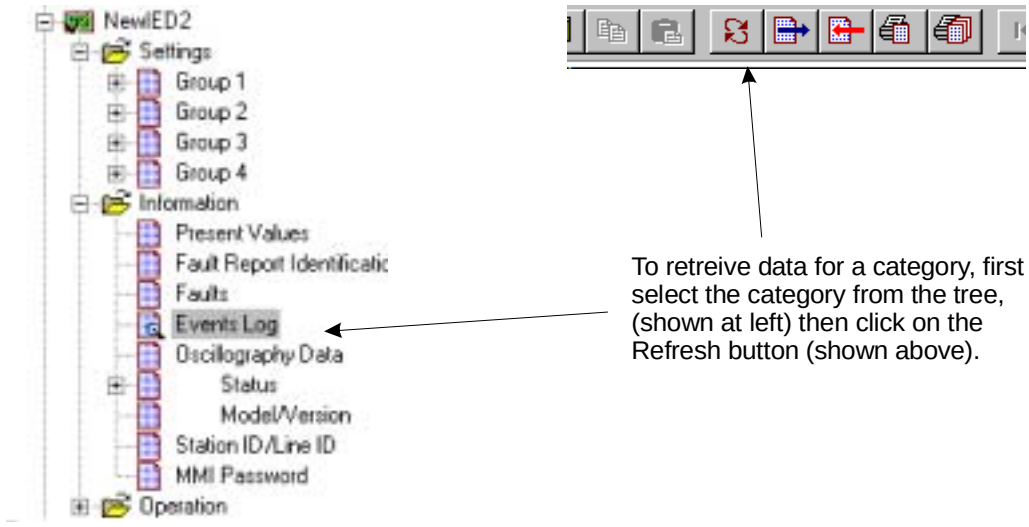

4. The retrieved data is displayed in the Spread control as shown below.

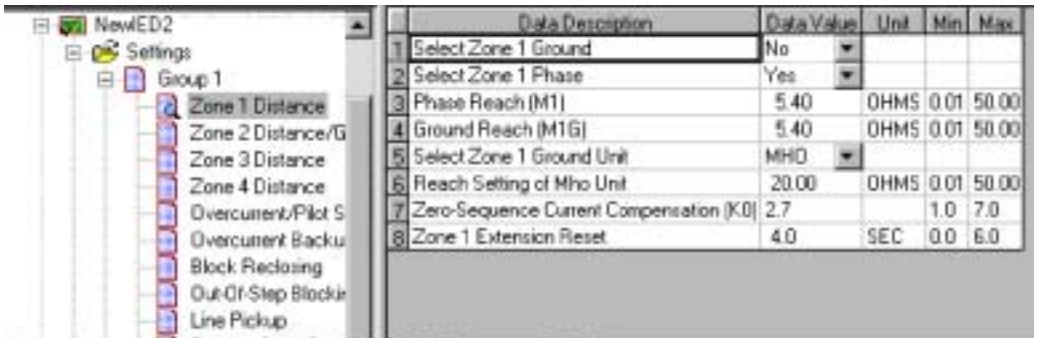

10.4.1 EDIT MODE

1. When a new IED is created, DGP-PC creates new Default Settings for it.
2. The user can select an IED, edit the default settings, then save it to local file. To save the settings to a file select the **File > Save Settings To File** menu item or click the Save icon.
3. This action can be performed before connecting to an IED or while DGP-PC is in the EDIT MODE (see SETTINGS MODE below).

10.4.2 SETTINGS MODE

Access to settings changes requires the user to log into the DGP with the appropriate Settings password (not required for Modbus DGP models).

Settings changes are made by clicking on a cell (data value) and entering the new data.

- If the data value is a drop-down list, select the new value in the list.
- If the data value is a check box, check or uncheck the box.
- If the data value is an edit box, enter the new value (within the range specified by the MIN and MAX values).



Data range and validation check will NOT be performed by DGP-PC.

To send changes to the DGP, *click on another cell* then click the Send Settings icon or select the **Control > Send Settings to Relay** menu item.

To make changes to another setting, select the setting and follow the above procedure.

DGP settings can also be saved to a file by selecting the **File > Save Settings to File** menu item or clicking the Save Settings icon. This file can be opened any time for the same IED or any IED of the same type and model.

DGP-PC Operation	Required Access Level
Change Password	Any Level
Manual Trip	Actions Level
Enable Outputs	Actions Level
Disable Outputs	Actions Level
Change Time and Date	Settings Level
Change Station/ Generator Id	Settings Level
Calculate CRC	Any Level
Relay Test	Actions Level
Digital Output Test	Actions level
Settings Changes	Settings Level
Data Reset	Actions Level

10.5.1 DESCRIPTION

The user must be logged in with Control access for access to control operations (not required for DGP with Modbus protocol). To access control operations, double click on the Operations branch to expand its tree to select the appropriate operation.

10.5.2 CHANGE PASSWORD

This item allows the user to change the DGP password. The valid password characters are A to Z, 0 to 9, and space. The factory default password contains one or more characters that are not valid. The communications password can only be viewed in encrypted form on the MMI; as such, it is **IMPORTANT** that the user keep a record of the password in a safe place.

1. To change the password, double-click click Change Password in the Operations branch.
2. Enter the present password then enter the new password.
3. If the new password is valid, it must be entered again.
4. Click the **OK** button to change the password.

10.5.3 MANUAL TRIP

This item allows the the output relays to be operated manually. Each of the four DGP output relays (94G, 94G1, 94G2, and 94G3) may be operated individually. Note that the relays cannot be operated if the appropriate jumper is installed (see Figure 3–3: DGP POWER SUPPLY MODULE on page 3–4 for the location and description of the jumpers).

1. To select Manual Trip, click Manual Trip in the Operations branch.
2. DGP-PC responds with a selection box showing the four output relays. Select the desired relay and click **OK**.
3. The relay operates and DGP-PC returns to the Manual Trip item menu.

10.5.4 ENABLE OUTPUTS

This item permits the DGP to energize the relay outputs. Note that the digital outputs cannot be enabled remotely if the appropriate jumper is installed (see Figure 3–4: DGP MMI MODULE on page 3–5 for the location and description of the jumpers).

1. Select the Enable Outputs item in the Operations branch.
2. Click **YES** to enable the outputs.

10.5.5 DISABLE OUTPUTS

This item inhibits the DGP from energizing any of the relay outputs except for the Critical Alarm output, the Non-critical Alarm output, the Test Pickup output, and the Test Trip output. Note that the digital outputs cannot be disabled if the appropriate jumper is installed (see Figure 3–4: DGP MMI MODULE on page 3–5 for the location and description of the jumpers).

1. Select the Disable Outputs item from the Operations branch.
2. Click **YES** to disable the outputs.

10.5.6 CHANGE DATE & TIME

This item sets the time and date in the DGP. Changing the time and date through this menu does not affect the time and date in the PC.

1. Select the Change Date and Time item from the Operations branch to display the current time and date.
2. The time is displayed in 24-hour format HH:MM:SS and the date in format MM/DD/YY. Click **YES** to display the Change Date and Time edit box.
3. Enter the new date and/or time and click **OK** to accept changes.

10.5.7 CHANGE GENERATOR/STATION ID

This menu item displays the station and generator ID for the relay. The IDs can be up to 32 characters long and must be all printable characters.

1. Select the Change Station/Generator ID item from the Operations branch.
2. DGP-PC responds with an edit box. Enter the new station and generator ID.
3. Click **OK** to accept changes.

10.5.8 RELAY TEST

This item allows the user to test the relay functions.

1. Select the Relay Test Mode item from the Operations branch to view the relay tests.
2. Select the desired test from the list box then click **Begin Test**.
3. Put the relay back in operating mode by clicking **End Test Mode** when the test is complete.
4. Repeat this process for each selected relay test.

10.5.9 DIGITAL OUTPUT TEST

This item allows performs digital output tests in the relay.

1. Select the Digital Output Test item from the Operations branch to view the digital output tests.
2. Select the desired test from the list box and click **Begin Test**.
3. To select another digital output, click **End Test** tjem select another test from the list.
4. Click **Cancel** to exit the Digital Output Test.

10.5.10 DIGITAL RESET

This item allows the user to reset various data items contained in the relay. The data items are displayed in a Check Box.

1. Select the Digital Reset item from the Operations branch.
2. Select the data item to be reset by checking it and clicking **OK**.
3. The data item is reset and DGP-PC returns to the Digital Reset item.

10.6.1 DESCRIPTION

NOTE

All Information data values are read only once upon entry to the respected Information Item. If the user exits from any item and then re-enters, the refresh button must be activated to update the most recent data values.

10.6.2 PRESENT VALUES

This item allows the user to display, print, or copy the present values to a file.

1. Select the Present Values item from the Information branch.
2. To print present values, click on the Print Icon or select the **File > Print** menu item.
3. Select the data values to copy by holding down the left mouse button and dragging the mouse icon over the data values.
4. Select the **Edit > Copy** menu item to copy the selection.
5. The copied data can be pasted to another application (such as Notepad) and then saved to a file.

10.6.3 FAULT REPORT IDENTIFICATION

This item allows the user to display, print, or copy the identification of each fault report. This includes the time, date, and trip type for each fault. This information allows the user to determine easily which fault to examine.

1. Select the Fault Report Identification item from the Information branch.
2. To print the Fault Report Identification screen, click the Print icon or select the **File > Print** menu item.
3. Select the data values to copy by holding down the left mouse button and dragging the mouse icon over the data values.
4. Select the **Edit > Copy** menu item to copy the selection.
5. The copied data can then be pasted to another application.

10.6.4 FAULT REPORT

This item allows the user to display, print, or copy the Fault Report and its associated events.

1. Select the Fault Report item from the Information branch.
2. To print the Fault Report screen, click the Print icon or select the **File > Print** menu item.
3. Select the data values to copy by holding down the left mouse button and dragging the mouse icon over the data values.
4. Select the **Edit > Copy** menu item to copy the selection.
5. The copied data can then be pasted to another application.

10.6.5 EVENTS LOG

This item allows the user to display, print or copy events stored in the relay.

1. Select the Events Log item from the Information branch.
2. To print the Events Log screen, click the Print icon or select the **File > Print** menu item.

3. Select the data values to copy by holding down the left mouse button and dragging the mouse icon over the data values.
4. Select the **Edit > Copy** menu item to copy the selection.
5. The copied data can then be pasted to another application.

NOTE: If DC power is removed for more than 24 hours, all event information may be lost.

10.6.6 OSCILLOGRAPHY DATA

For applicable models, this item allows oscillography data for a particular fault to be saved on disk.

Select the Oscillography Data item from the Information branch and follow the DGP-PC prompts.

10.6.7 DGP STATUS

This item allows the user to display, print, or copy the DGP status.

1. Select the DGP Status item from the Information branch.
2. To print the DGP Status screen, click the Print icon or select the **File > Print** menu item.
3. Select the data values to copy by holding down the left mouse button and dragging the mouse icon over the data values.
4. Select the **Edit > Copy** menu item to copy the selection.
5. The copied data can then be pasted to another application.

10.6.8 DGP MODEL

This item allows the user to display, print, or copy the DGP model and PROM version number.

1. Select the DGP Model item from the Information branch.
2. To print the DGP Model screen, click the Print icon or select the **File > Print** menu item.
3. Select the data values to copy by holding down the left mouse button and dragging the mouse icon over the data values.
4. Select the **Edit > Copy** menu item to copy the selection.
5. The copied data can then be pasted to another application.

10.6.9 STATION/GENERATOR ID

This item allows the user to display, print or copy the Station and Generator ID number. Select the Station/Generator ID item from the Information menu and follow the instructions above to print and/or copied the data.

10.6.10 MMI PASSWORD

This item allows the user to display, print or copy the MMI Password. Select the MMI Password item from the Information menu and follow the instructions above to print and/or copied the data.

A.1.1 LIST OF TABLES

TABLE: 1–1 ORDER CODES 1-2
TABLE: 1–2 DGP SELECTION GUIDE 1-3
TABLE: 1–3 DGP PROTECTION FUNCTIONS 1-7
TABLE: 1–4 TYPICAL MOTORING POWER 1-9
TABLE: 2–1 DGP SYSTEM SETTINGS & RATINGS 2-3
TABLE: 2–2 51V RESTRAINT VOLTAGES 2-22
TABLE: 2–3 24A VOLTAGES 2-30
TABLE: 2–4 DI1 BLOCKING CONFIGURATION 2-36
TABLE: 2–5 DGP***AAA SETTINGS TABLE 2-41
TABLE: 2–6 DGP***ABA SETTINGS TABLE 2-46
TABLE: 2–7 DGP***ACA SETTINGS TABLE 2-51
TABLE: 4–1 DEFAULT COMMUNICATION PARAMETERS 4-6
TABLE: 4–2 CURRENT INPUTS FOR TESTS T8 & T9 4-21
TABLE: 4–3 CURRENT INPUTS FOR TEST T12 4-23
TABLE: 4–4 CURRENT INPUTS FOR TEST T13 4-24
TABLE: 4–5 VOLTAGE INPUTS FOR TEST T14 4-26
TABLE: 4–6 VOLTAGE INPUTS FOR TEST T15 4-27
TABLE: 4–7 VOLTAGE INPUTS FOR TEST T16 4-29
TABLE: 4–8 VOLTAGE INPUTS FOR TEST T17 4-30
TABLE: 4–9 CURRENT INPUTS FOR TEST T18 4-31
TABLE: 6–1 START-UP SELF-TESTS 6-2
TABLE: 6–2 RUN-TIME BACKGROUND SELF-TESTS 6-3
TABLE: 6–3 RUN-TIME FOREGROUND SELF-TESTS 6-3
TABLE: 6–4 SYSTEM STATUS ERROR MESSAGES 6-6
TABLE: 6–5 MISCELLANEOUS MESSAGES 6-6
TABLE: 6–6 ERROR MESSAGES AT STARTUP 6-7
TABLE: 6–7 ERROR MESSAGES AT RUNTIME 6-9
TABLE: 8–1 MMI ERROR MESSAGES 8-15
TABLE: 8–2 PASSWORD ENCRYPTION KEY TABLE 8-17
TABLE: 9–1 SCI DIP SWITCH CONFIGURATION 9-4
TABLE: 9–2 MEMORY MAP ORGANIZATION 9-13
TABLE: 9–3 DGP MODBUS MEMORY MAP 9-25
TABLE: 9–4 COIL COMMANDS 9-49
Table: B–1 REVISION HISTORY B-1
Table: B–2 ADDITIONS TO DGP MANUAL GEK-100666E B-1
Table: B–3 ADDITIONS TO DGP MANUAL GEK-100666D B-1
TABLE: B–4 TABLE 4–4: CURRENT INPUTS FOR TEST T13 ..... B-2
Table: B–4 ADDITIONS TO DGP MANUAL GEK-100666C B-2
Table: B–5 ADDITIONS TO DGP MANUAL GEK-100666B B-3
Table: B–6 MAJOR UPDATES FOR DGP MANUAL GEK-100666E B-3
Table: B–7 MAJOR UPDATES FOR DGP MANUAL GEK-100666D B-3
Table: B–8 MAJOR UPDATES FOR DGP MANUAL GEK-100666C B-4
Table: B–9 MAJOR UPDATES FOR DGP MANUAL GEK-100666B B-5

A.1.2 LIST OF FIGURES

FIGURE 1–1: TYPICAL WIRING DIAGRAM 1-6
FIGURE 1–2: SINGLE LINE DIAGRAM 1-7
FIGURE 1–3: SIMPLE LOGIC DIAGRAM – 87G, 32, 27, 59, AND AE 1-13
FIGURE 1–4: SIMPLE LOGIC DIAGRAM – 46, 40, AND 51V 1-14
FIGURE 1–5: SIMPLE LOGIC DIAGRAM – 64G1, 64G2, 51GN, AND 24 1-15
FIGURE 1–6: SIMPLE LOGIC DIAGRAM – 81-O AND 81-U 1-16
FIGURE 1–7: SIMPLE LOGIC DIAGRAM – VT FUSE FAILURE 1-17
FIGURE 1–8: FREQUENCY-SENSITIVITY CHARACTERISTICS 1-21
FIGURE 1–9: ELEMENTARY DIAGRAM WITH TEST BLOCKS, WYE VTS 1-24
FIGURE 1–10: ELEMENTARY DIAGRAM WITH TEST BLOCKS, DELTA VTS 1-25

A

FIGURE 1–11: ELEMENTARY DIAGRAM WITHOUT TEST BLOCKS, WYE VTS 1-26
FIGURE 1–12: ELEMENTARY DIAGRAM WITHOUT TEST BLOCKS, DELTA VTS 1-27
FIGURE 1–13: DIGITAL RELAY SYMBOL LEGEND 1-28
FIGURE 2–1: SAMPLE GENERATOR SYSTEM 2-2
FIGURE 2–2: 87G CHARACTERISTICS – K1 = 1%, PICKUP = 0.3 A 2-14
FIGURE 2–3: 87G CHARACTERISTICS – K1 = 2%, PICKUP = 0.3 A 2-15
FIGURE 2–4: 87G CHARACTERISTICS – K1 = 5%, PICKUP = 0.3 A 2-16
FIGURE 2–5: 87G CHARACTERISTICS – K1 = 10%, PICKUP = 0.3 A 2-17
FIGURE 2–6: TIME CURRENT CHARACTERISTIC OF 46T FUNCTION 2-19
FIGURE 2–7: MHO CHARACTERISTICS FOR 40-1 & 40-2 FUNCTIONS 2-21
FIGURE 2–8: 51V TIME-CURRENT CHARACTERISTICS FOR 0 TO 30% RESTRAINT 2-24
FIGURE 2–9: 51V TIME-CURRENT CHARACTERISTICS FOR 50% RESTRAINT 2-25
FIGURE 2–10: 51V TIME-CURRENT CHARACTERISTICS FOR 75% RESTRAINT 2-26
FIGURE 2–11: 51V TIME-CURRENT CHARACTERISTICS FOR 100% RESTRAINT 2-27
FIGURE 2–12: TIME CHARACTERISTICS OF FUNCTION 24T (CURVE 1) 2-31
FIGURE 2–13: TIME CHARACTERISTICS OF FUNCTION 24T (CURVE 2) 2-32
FIGURE 2–14: TIME CHARACTERISTICS OF FUNCTION 24T (CURVE 3) 2-33
FIGURE 2–15: 59 TIME-VOLTAGE CHARACTERISTICS 2-35
FIGURE 2–16: 51GN TIME-CURRENT CHARACTERISTICS 2-39
FIGURE 2–17: 27 TIME-VOLTAGE CHARACTERISTICS 2-40
FIGURE 3–1: DGP OUTLINE DRAWING 3-2
FIGURE 3–2: FRONT AND REAR VIEW 3-3
FIGURE 3–3: DGP POWER SUPPLY MODULE 3-4
FIGURE 3–4: DGP MMI MODULE 3-5
FIGURE 4–1: ADDING A NEW IED 4-6
FIGURE 4–2: DGP-PC SETTINGS MENU 4-7
FIGURE 4–3: DIGITAL OUTPUT TEST CONNECTIONS 4-12
FIGURE 4–4: DIGITAL INPUT TEST CONNECTIONS 4-14
FIGURE 4–5: AC SYSTEM INPUT TEST CONNECTIONS 4-16
FIGURE 4–6: GENERATOR DIFFERENTIAL TEST CONNECTIONS 4-18
FIGURE 4–7: CURRENT UNBALANCE TEST CONNECTIONS 4-20
FIGURE 4–8: STANDARD FUNCTIONAL TEST CONNECTIONS 4-25
FIGURE 4–9: STATOR GROUND TEST CONNECTIONS 4-28
FIGURE 4–10: STATOR GROUND TEST FOR 27TN FUNCTION 4-38
FIGURE 8–1: TARGET LEDS 8-2
FIGURE 8–2: MMI KEYPAD 8-3
FIGURE 8–3: [SET] KEY MENU STRUCTURE 8-6
FIGURE 8–4: [ACT] KEY MENU STRUCTURE 8-11
FIGURE 8–5: [INF] KEY MENU STRUCTURE 8-14
FIGURE 9–1: DGP COMMUNICATIONS WIRING 9-3
FIGURE 9–2: RS485 COMMUNICATIONS 9-4
FIGURE 10–1: IED PROPERTIES WINDOW 10-5

B.1.1 REVISION HISTORY

Table B–1: REVISION HISTORY

MANUAL P/N	DGP REVISIONS	RELEASE DATE
GEK-100666	---	---
GEK-100666A	---	---
GEK-100666B	V210.12000P	March 07, 2000
GEK-100666C	V210.12000P, V212.00000F V211.22000J, V210.12000D	July 28, 2000
GEK-100666D	V210.22000P, V210.10000F V211.32000J, V210.22000D	December 21, 2000
GEK-100666E	V210.32000P, V212.10000F V211.32000J, V210.22000D	October 1, 2002
GEK-100666F	V210.32000P, V212.10000F V211.32000J, V210.22000D	February 20, 2003

B.1.2 ADDITIONS TO DGP MANUAL

Table B–2: MAJOR UPDATES FOR DGP MANUAL GEK-100666F

Page (100666E)	Change	From	To (in GEK-100666F)
NOTE	No revisions were made to the firmware. There were no additions to the manual content, only some minor changes (see following section).		

Table B–3: ADDITIONS TO DGP MANUAL GEK-100666E

PAGE IN GEK-100666D	ADDITION (to GEK-100666E)
2-28	In Section 2.3.10: STATOR GROUND FAULT (27TN): "Settings 3003: **PICKUP**, 3005: **FORPWR-L**, and 3006: **FORPWR-H** require measurements to determine proper settings. The DGP measures and displays 3rd harmonic voltage (THIRD HARMONIC N) at the generator terminals. The 3rd harmonic voltage varies at very low forward power levels and in many cases is non-zero when the generator is starting and becomes lower (or zero) in a certain band of forward power. Is is recommended that the 3rd harmonic voltage related to forward power is recorded as the unit is started and ran to full load to determine the exact values for **PICKUP**, **FORPWR-L**, and **FORPWR-H**."
2-50	Added 27TN settings to Commissioning Table for the DGP***ABA relay.
7-1	In CONTACT DATA Trip Outputs specifications: "Leakage Current: 2.36 mA (average)"
C-4	Added the following Question and Answer to the FAQ list in Section C.1.2: **"20. What should I do if an ERROR message is displayed on the DGP relay?** Besides following the instructions outlined in Section 6.3: TROUBLESHOOTING on page 6–4, it is recommended to turn off power to the relay and reseat any "suspect" card. Shipping or excess vibrations may have caused this problem. Please perform this procedure before swapping a module from another DGP relay."

Table B–4: ADDITIONS TO DGP MANUAL GEK-100666D

PAGE IN GEK-100666C	ADDITION (to GEK-100666D)
NOTE	Minor revisions were made to the firmware. There were no additions to manual content.

Table B–5: ADDITIONS TO DGP MANUAL GEK-100666C

PAGE IN GEK-100666B	ADDITION (to GEK-100666C)
1-2	Undervoltage entry in Table 1-2: DGP SELECTION GUIDE
1-3	Section 1.14 for the DEC 1000
2-11	**"112: PREFLT – PREFAULT CYCLES** **PREFLT** selects the number of pre-trigger (or pre-fault) cycles in each oscillography data set. It can be set from 1 to 20. Setting 111: **NUM FLTS** determines the total number of cycles per storage event, as explained above, and **PREFLT** determines how many of these are pre-trigger cycles. **113: OSC TRIG – EXTERNAL OSCILLOGRAPHY TRIGGER** A DGP system trip always causes oscillography to be stored. **OSC TRIG** enables or disables an additional oscillography trigger by an external digital input (DI5). Refer to Section 1.4.9: FAULT REPORT & OSCILLOGRAPHY DATA on page 1–22 for further explanation. **OSC TRIG** may be set to 0 (DI ENA) or 1 (DI DIS)."
2-22	In Section 2.37: OVERCURRENT WITH VOLTAGE RESTRAINT "V = $\sqrt{3}\times$ phase-to-ground voltage for Wye connected VTs (see note 2) phase-to-phase voltage for Delta connected VTs"
2-41	Added separate DGP Settings Tables for DGP***AAA, DGP***ABA, and DGP***ACA
4-23	Added the following step in the T10 procedure of Section 4.7.7: "5. Reduce Ia to 0 A"
4-25	Added the following to Step 4 of the T13 procedure of Section 4.7.10: "Set the current inputs according to the Table below: **Table 4–4: CURRENT INPUTS FOR TEST T13** PHASE A: MAG. 0.45 (0.09) A, PHASE 0° / PHASE B: MAG. 0.45 (0.09) A, PHASE –120° / PHASE C: MAG. 0.45 (0.09) A, PHASE –240°
4-25	Added the following note to the T13 procedure of Section 4.7.10: **VA, VB, and VC must change from 70 V rms to 29 V rms with the source voltage continuously on.**
4-30	Added a column for Frequency in Table 4-6: VOLTAGE INPUTS FOR TEST T16
---	Added FREQUENTLY ASKED QUESTIONS Appendix

Table B–6: ADDITIONS TO DGP MANUAL GEK-100666B

PAGE IN GEK-100666A	ADDITION (to GEK-100666B)
1-3	Figure 1-1: TYPICAL WIRING DIAGRAM
1-3	Figure 1-2: SINGLE LINE DIAGRAM
8-2	Figure 8-1: TARGET LEDS
8-2	Figure 8-2: MMI KEYPAD
9-4	Section 9-2: MODBUS COMMUNICATIONS
---	Chapter 10: GE-LINK SOFTWARE
---	Appendix A: TABLES AND FIGURES
---	Appendix B: CHANGE NOTES
---	Appendix C: DGP WARRANTY
---	Added an Index
---	Reference to GE Multilin Website on back page

B.1.3 CHANGES TO DGP MANUAL

Table B–7: MAJOR UPDATES FOR DGP MANUAL GEK-100666F

Page (100666F)	Change	From	To (in GEK-100666E)
Title	Updated	“P/N: GEK-100666E”	“P/N: GEK-100666F”
Title	Removed	“NOTE: All relays must be powered up at least once per year to avoid deterioration of electrolytic capacitors and subsequent relay failure.”	

Table B–8: MAJOR UPDATES FOR DGP MANUAL GEK-100666E

Page (100666D)	Change	From	To (in GEK-100666E)
---	Updated	All instances of “GE Power Management”	“GE Multilin”
---	Updated	All instances of “GE-Link”	“DGP-PC”
Title	Updated	“P/N: GEK-100666D”	“P/N: GEK-100666E”
Title	Updated	“www.GEindustrial.com/pm”	“www.GEindustrial.com/multilin”
1-5	Updated	Typical Wiring Diagram (704753A7)	Typical Wiring Diagram (704753A9)
3-3	Updated	Front and Rear View (704752A8)	Front and Rear View (704752A9)
7-1	Corrected	“Trip Voltage Monitor: 30 to 3000 V DC”	“Trip Voltage Monitor: 30 to 300 V DC”
9-18	Corrected	“DIGITAL INPUT 6 CLOSED”	“EXTERNAL VTFF CLOSED”
9-18	Corrected	“DIGITAL INPUT 6 OPEN”	“EXTERNAL VTFF OPEN”

Table B–9: MAJOR UPDATES FOR DGP MANUAL GEK-100666D

Page (100666C)	Change	From	To (in GEK-100666D)
NOTE	Minor revisions were made to the firmware. There were no updates of manual content.		

Table B–10: MAJOR UPDATES FOR DGP MANUAL GEK-100666C

Page (100666B)	Change	From	To (in GEK-100666C)
Title	Updated	"P/N: GEK-100666B"	"P/N: GEK-100666C"
Title	Updated	"www.ge.com/indsys/pm"	"www.GEindustrial.com/pm"
1-1	Modified	"MMI - CONTROL" in step 3 table	"MMI - MASTER"
1-5	Updated	Typical Wiring Diagram (704753A6)	Typical Wiring Diagram (704753A7)
2-13	Corrected	$\lvert\bar{I}_1 - \bar{I}_2\rvert > K(\bar{I}_1 \cdot \bar{I}_2)$	$\lvert\bar{I}_1 - \bar{I}_2\rvert^2 > K(\bar{I}_1 \cdot \bar{I}_2)$
2-16	Corrected	$T = \frac{K2}{I_2 / I_{FL}^2}$ seconds	$T = \frac{K2}{(I_2 / I_{FL})^2}$ seconds
4-12	Corrected	In Figure 4-3, the table row: 74NC | AF8 | AG10	74NC | AF8 | AG8
4-16	Corrected	In Figure 4-5, the text: "BH6 or TP2-12"	"BH6 or TP1-12"
4-19	Corrected	In Figure 4-6, the output of the upper single-phase current source: "IR"	"IS"
4-25	Modified	"8. Change the voltage of all three phases to 35 V RMS..."	"8. Change the voltage of all three phases to 29 V RMS..."
4-25	Modified	"9. Repeat Step 4."	"9. Verify that the test pickup and test trip operates in 5.00 to 5.05 seconds."
4-26	Corrected	In Figure 4-8, the description of the upper source from: "3-PHASE, 4-WIRE CURRENT SOURCE"	"3-PHASE 4-WIRE VOLTAGE SOURCE"
4-27	Corrected	In Table 4-4, the magnitude of the phase C test voltages from "70V" for Test A and "70V" for Test B	"3.8 V" for Test A "4.2 V" for Test B
4-28	Corrected	In Figure 4-9, the text "BH12 or TP2-21"	"BH12 or TP1-21"
4-32	Replaced	Table 4-8	Updated Table 4-8
4-37	Corrected	In Section 4.7.24, "(2601) **VTFF** = ENABLE (1)"	"(2601) **VTFF** = DISABLE (0) – set for TEST mode only"
7-1	Modified	"RMS measurements: ±3%"	RMS measurements: ±3% of reading"
9-1	Corrected	In Section 9.1.3, "ATEL0L0Q0S7=60V0X4Y0"	"ATEL0L3Q0S7=60V0X4Y0"

Table B–11: MAJOR UPDATES FOR DGP MANUAL GEK-100666B

Page (100666A)	Change	From	To (page of GEK-100666B)
Title	Modified	“DGP Revision: V0001.02AA10”	“DGP Revision: V210.L1200P”
Title	Modified	“P/N: GEK-100666A”	“P/N: GEK-100666B’
Title	Updated		GE address
2-1	Updated		DGP System settings and ratings
2-22	Updated		Added k=1 curve on 46T graph
3-6	Modified	Figure 3-2, 3-3, and 3-4	Replaced all with Figure 3-2
4-5	Updated	Using DGP-Link section	Using GE-Link Section
---	Updated	all instances of “GE Multilin”	“GE Power Management”
---	Updated	all references to “DGP-Link”	“GE-Link”

C.1.1 FREQUENTLY ASKED QUESTIONS

1. Why does my DGP display a "351" error code?

The current inputs INS and INR are derived from the residual connections of the respective phase CTs and do not require dedicated neutral CTs. Zero-sequence current at system and/or neutral side of the generator stator windings is calculated and compared with the measured INS and/or INR values by the DGP as part of a background self-test. If they do not match, a 351 error code is generated.

2. Why can't I get the 27 function (undervoltage) to operate?

The 27 element operates when the generator is considered on-line. The DGP recognizes the on-line status DI1 "Generator Off-Line". An Auxiliary b contact will allow the DGP to interpret the correct generator status.

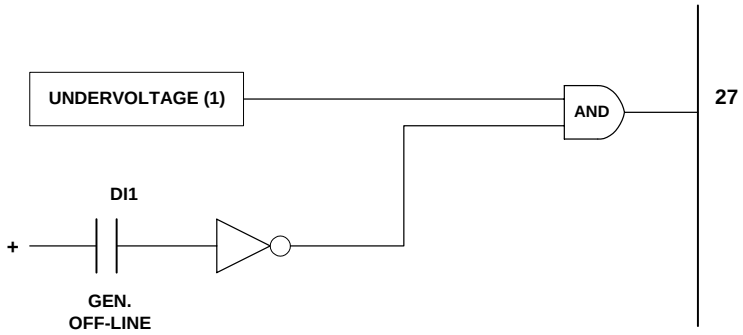

3. How do I order replacement parts for my DGPs?

The following table shows the replacement part numbers and their availability for the DGP:

MODULES	DGPxxxAAA	DGPxxxABA	DGPxxxACA
SSP301	✔	✔	✔
ANI301	✔	✔	✔
DAP201	✔	✔	✔
DSP401	✔	✔	✔
MGM781 - specify 1A or 5A	✔	✔	✔
MMI301	✔	✔	✔
0215B8070G0004	✔ 48 V DC	✔ 48 V DC	✔ 48 V DC
0215B8070G0005	✔ 125 V DC	✔ 125 V DC	✔ 125 V DC
0215B8070G0006	✔ 250 V DC	✔ 250 V DC	✔ 250 V DC
DIT 103			✔
DIT 101	✔		
DIT 102		✔	

4. I have an older version of DGPxxxAAA firmware. What upgrade kit do I order to upgrade my DGPxxxAAA to the latest firmware revision?

Use kit 0355A3489G0001.

5. I have an older version of DGPxxxABA firmware. What upgrade kit do I order to upgrade my DGPxxxABA to the latest firmware revision?

Use kit 0358A1186G0001.

6. I ordered a DGPxxxABA but received a DGPxxxABA-0005.

The DGPxxxABA-0005 is the standard version for ABA relays.

7. I have an older version of DGPxxxACA firmware. What upgrade kit do I order to upgrade my DGPxxxACA to the latest firmware revision?

Use kit 0361A7507G0001.

8. What model of test plug should be used for the DGP?

The DGP uses test plug models XTM28L1 (two of these are used for the left side) and XTM28R1 (two of these are used for the right side).

9. Can individual modules be replace while the DGP is energized?

The relay should be powered down by removing the test plugs or turning off the PS1 and PS2 switches before replacing modules. Failure to do so can permanently damage the relay!

10. Will the DGP power supply work with an AC voltage?

The DGP power supply does not contain a bridge rectifier. Therefore, the power supply only operates with DC voltage.

11. Why can't I change settings with the DGP-PC software?

In order to download settings using DGP-PC, the remote settings change jumper must be enabled. This is accomplished by moving the shorting pin on J2 on the right of the MMI301 module to one side as shown in the diagram below:

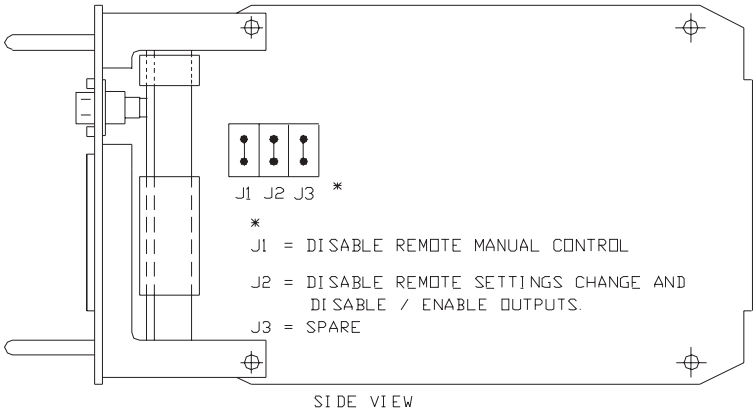

12. What type of cable is required to communicate with my laptop?

The DGP requires a special null-modem cable to communicate directly with a laptop PC (see connection diagram below). The cables are available from GE Multilin as part number 0246A9866. Please specify the cable type and connector gender when ordering.

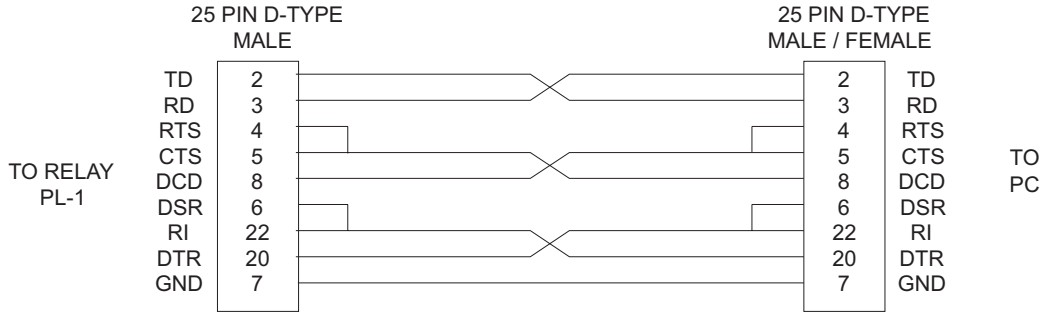

C) REMOTE COMMUNICATIONS TO PC DIRECTLY

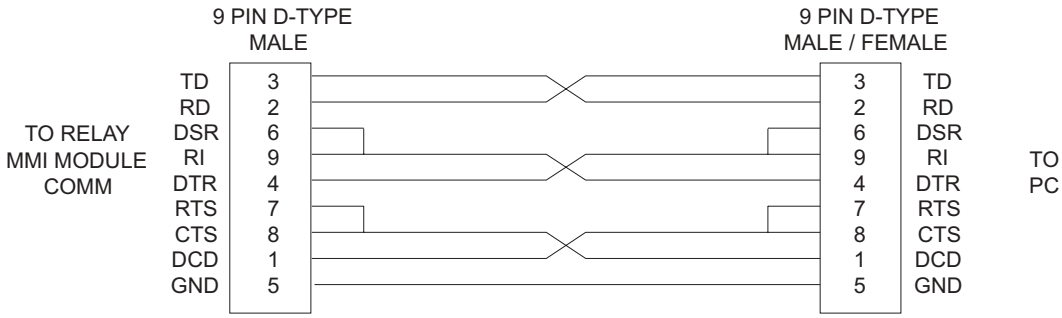

D) REMOTE COMMUNICATIONS FROM MMI MODULE TO PC

9 PIN D-TYPE

13. Is Modbus communication available for all DGP models?

Modbus communication is only available for DGPxxxBCA models.

14. My relay displays a FAIL 520 error code.

Use the MMI Control password to enable outputs and recalculate the CRC.

15. My relay displays a FAIL 770 error code.

For the DGP5xxABA models, check that both power supplies are turned on.

For the DGP5xxAAA and DGP5xxACA models, ensure both power supplies are inserted correctly.

16. My relay displays a FAIL 738 error code.

Check that control voltage is as per the DGP power supply rating.

17. What do I do if I forget my Remote Password?

Press the [INF] key on the MMI and scroll down using the arrow keys to Password then press the [ENT] key. The message VIEW will be displayed. Press the up-arrow key once to see the encrypted password for VIEW. Press the up-arrow key again twice to see the encrypted password for SETTING and twice once more to see the encrypted password for CTRL. Use the password encryption table in Chapter 8 of the DGP manual to decode these passwords.

18. Why is there a discrepancy in the pickup of function 46?

The 46 function is a negative-sequence overcurrent function. Theoretically, when single-phase test current is used, the negative-sequence component of the test current is one-third of the applied current. Therefore, it will take the single-phase test current three times the 46 PICKUP setting for the function to start timing.

19. Where is the figure showing Curve 4 of the 24T function in the DGP manual?

Curve 4 is a definite time delay equal to the corresponding TIME FACTOR setting. Therefore, no figure is necessary. The same applies to Curve 2 of functions 59 and 27.

20. What should I do if an ERROR message is displayed on the DGP relay?

Besides following the instructions outlined in Section 6.3: TROUBLESHOOTING on page 6–4, it is recommended to turn off power to the relay and reseat any “suspect” card. Shipping or excess vibrations may have caused this problem. Please perform this procedure before swapping a module from another DGP relay.

GE MULTILIN RELAY WARRANTY

General Electric Multilin (GE Multilin) warrants each relay it manufactures to be free from defects in material and workmanship under normal use and service for a period of 24 months from date of shipment from factory.

In the event of a failure covered by warranty, GE Power Managment will undertake to repair or replace the relay providing the warrantor determined that it is defective and it is returned with all transportation charges prepaid to an authorized service centre or the factory. Repairs or replacement under warranty will be made without charge.

Warranty shall not apply to any relay which has been subject to misuse, negligence, accident, incorrect installation or use not in accordance with instructions nor any unit that has been altered outside a GE Multilin authorized factory outlet.

GE Multilin is not liable for special, indirect or consequential damages or for loss of profit or for expenses sustained as a result of a relay malfunction, incorrect application or adjustment.

For complete text of Warranty (including limitations and disclaimers), refer to GE Multilin Standard Conditions of Sale.

D

Numerics

24A
- acceptance tests 4-29
- description 1-10
- logic diagram 1-15
- periodic tests 5-12
- settings 2-29
- voltages 2-30

24T
- acceptance tests 4-30
- algorithm 2-29
- description 1-10
- logic diagram 1-15
- periodic tests 5-13
- settings 2-29
- time characteristics 2-31, 2-32, 2-33

27
- acceptance tests 4-37
- algorithn 2-38
- description 1-11
- logic diagram 1-13
- periodic tests 5-16
- settings 2-38
- time-voltage characteristics 2-40
- troubleshooting C-1

27TN
- acceptance tests 4-37
- algorithm 2-28
- description 1-9
- settings 2-28
- test connetions 4-38

32
- acceptance tests 4-22, 4-23
- description 1-9
- logic diagram 1-13
- periodic tests 5-9
- settings 2-21

40
- acceptance tests 4-21, 4-22
- description 1-8
- logic diagram 1-14
- mho characteristics 2-21
- periodic tests 5-8
- settings 2-20

46A
- acceptance tests 4-19
- logic diagram 1-14
- periodic tests 5-6
- settings 2-18

46T
- acceptance tests 4-19
- algorithm 2-18
- description 1-8
- logic diagram 1-14
- periodic tests 5-7
- settings 2-18
- time-current characteristics 2-19

51GN
- acceptance tests 4-36
- algorithm 2-38
- description 1-10
- logic diagram 1-15
- periodic tests 5-16
- settings 2-38
- time-current characteristics 2-39

51V
- acceptance tests 4-23
- algorithm 2-22
- description 1-9
- logic diagram 1-14
- periodic tests 5-10
- restraint voltages 2-22
- settings 2-22
- time-current characteristics 2-24, 2-25, 2-26, 2-27

59
- acceptance tests 4-31
- algorithm 2-34
- description 1-11
- logic diagram 1-13
- periodic tests 5-14
- settings 2-34
- time-voltage characteristics 2-35

64G
- accpetance tests 4-26, 4-27
- description 1-9
- logic diagram 1-15
- periodic tests 5-11
- settings 2-28

74 OUTPUT RELAYS 1-18
- trip current monitoring 2-13

81
- acceptance tests 4-32, 4-33, 4-34, 4-35
- description 1-11
- logic diagram 1-16
- periodic tests 5-14, 5-15
- settings 2-36
- undervoltage cutoff 2-36

87G
- acceptance tests 4-17
- algorithm 2-13
- characteristic curves 2-14, 2-15, 2-16, 2-17
- description 1-8
- logic diagram 1-13
- periodic tests 5-6

87G settings 2-13

94G
- trip voltage monitoring 2-10

94G OUTPUT RELAYS
- description 1-18
- trip current monitoring 2-10

A

AC SYSTEM INPUT
- acceptance tests 4-15
- periodic tests 5-4

ACCEPTANCE TESTS
- entering test mode 4-4, 4-7
- equipment 4-2
- exiting test mode 4-4, 4-7
- grounding 4-2
- initial test setup 4-8
- preparation 4-2
- protection tests 4-1, 4-17
- setting up a new test unit 4-5

software setup 4-5
using GE-Link 4-5
acceptance tests 4-22
ACCIDENTAL ENERGIZATION
acceptance tests 4-24
description 1-12
logic diagram 1-13
settings 2-37
ACT KEY 8-7
ACTIONS KEY 8-7
ADAPTIVE SAMPLING FREQUENCY 1-20
AE
acceptance tests 4-24
description 1-12
logic diagram 1-13
settings 2-37
ALARM RELAYS 1-18, 2-13
ANSI DEVICE NUMBER
see ANSI device numbers listed numerically at beginning of index
ANTI-MOTORING
acceptance tests 4-22, 4-23
description 1-9
logic diagram 1-13
periodic tests 5-9
settings 2-21
ARROW KEYS 8-4

B

BASIC CONSTRUCTION 3-4
BAUD RATE 2-11
BURDEN RATINGS 7-1

C

CASE ASSEMBLY 3-1
CHANGES TO L60 MANUAL B-3
CIRCUIT BOARD MODULES 3-4
CLEAR KEY 8-3
CLOCK
synchronizing 2-11
CLR KEY 8-3
COMMISSIONING 2-41
COMMPORT 2-11
COMMUNICATION
modem connection for DGP-PC 10-4
COMMUNICATIONS
baud rate 2-11
data frame format 9-5
data packet format 9-5
data rate 9-5
default parameters 4-6
description 1-22
error checking 9-6
example 9-16
Modbus 9-5, C-3
modem connections 9-1
modem settings 9-1
null-modem connections 9-2, C-3
parity 2-11
PC modem 9-1
RS485 9-4
settings 2-11
stop bits 2-11
wiring 9-3
CONFIGURATION SETTINGS 2-10
CONSTRUCTION 3-4
CONTACT RATINGS 7-1
CONTROL REGISTERS 9-15
CRITICAL FAILURES 6-5
CT
neutral CT ratio 2-12
ratio 2-10
CT RATIO 2-10
CURRENT TRANSFORMERS
see index entry for CTs 1-24
CURRENT UNBALANCE
description 1-8
logic diagram 1-14
CURRENT UNBALANCE ALARM
acceptance tests 4-19
logic diagram 1-14
periodic tests 5-6
settings 2-18
CURRENT UNBALANCE TEST
connections 4-20
CURRENT UNBALANCE TRIP
acceptance tests 4-19
algorithm 2-18
logic diagram 1-14
periodic tests 5-7
settings 2-18
time-current characteristics 2-19

D

DATA ENTRY KEYS 8-4
DATA FRAME FORMAT 9-5
DATA FRAMING 9-6
DATA PACKET FORMAT 9-5
DATA RATE 9-5
DATE
changing 10-10
memory map 9-24
setting 8-8
DEC1000 CONTACT EXPANSION UNIT 1-19
DEFECTIVE MODULES
locating 6-5
DEVICE NUMBER
see ANSI device numbers listed numerically at beginning of index
DGP-PC
adding a site 10-2
change generator/station ID 10-10
chaning passwords 10-9
date & time 10-10
deleting a site 10-3
edit mode 10-8
events log 10-11
fault report 10-11
getting information 10-11
oscillography 10-12
performing operations 10-9
user interface 10-2

DI1 to DI6
see entry for DIGITAL INPUTS
DIGITAL INPUT TEST
connections 4-14
DIGITAL INPUTS
acceptance tests 4-13
blocking configuration 2-36
description 1-18
periodic tests 5-3
settings 2-36
DIGITAL OUTPUT TEST
connections 4-12
DIGITAL OUTPUTS
acceptance tests 4-11
periodic tests 5-3
test with DGP-PC 10-10
testing 8-10
DIGITAL RESET 10-10
DISPLAY 8-1
periodic testing 5-2
DISPLAY TEST 4-10

E

ELECTRICAL RATINGS 7-1
ELEMENTARY DIAGRAM
delta VTs 1-27
test blocks & delta VTs 1-25
test blocks & wye VTs 1-24
wye VTs 1-26
ENCRYPTION
password encryption 8-17
END KEY 8-5
ENT KEY 8-4
ENTER KEY 8-4
ENVIRONMENT 3-7
EQUIPMENT GROUNDING 4-2
ERROR CHECKING 9-6
ERROR CODES 6-7, C-1, C-4
ERROR MESSAGES 8-15
MMI 8-15
run-time 6-9
start-up 6-7
system status 6-6
EVENT REPORT
memory map 9-14
EVENTS
requesting 8-13
sequence 1-20
EVENTS LOG 10-11
EXTERNAL CONNECTIONS
description 3-7
test 3-7

F

FACTORY SETTINGS 9-50
FAIL 6-5
FAILURES
critical 6-5
non-critical 6-5
status 6-6
FAQ C-1
FAULT EVENTS 2-11
FAULT INFORMATION 8-12
FAULT REPORT
description 1-22
DGP-PC 10-11
identification 10-11
memory map 9-14
FAULT STATUS
memory map 9-14
FIBER-OPTIC LINK 1-23
FIRMWARE UPGRADE C-1, C-2
FREQUENCY 1-20, 2-10
FREQUENCY-SENSITIVITY CHARACTERISTICS 1-21
FREQUENTLY ASKED QUESTIONS C-1
FRONT VIEW 3-3

G

GE-LINK
logging into the relay 4-6
software setup 4-5
starting 4-5
GENERAL RELAY TESTS 4-9
GENERATOR DIFFERENTIAL
acceptance tests 4-17
periodic tests 5-6
GENERATOR DIFFERENTIAL TEST
connections 4-18
GENERATOR ID 8-13, 10-12
changing 10-10
GETTING STARTED 1-1
G-NET 1-21, 2-11
GROUND OVERCURRENT
algorithm 2-38
description 1-10
logic diagram 1-15
settings 2-38
time-current characteristics 2-39
GROUNDING 4-2

H

HANDLING 3-7

I

IDENTIFICATION 3-4
IED
adding 10-5
connection 10-4
deleting 10-6
modes 10-5
modifying 10-5, 10-6
INF KEY 8-12
INFORMATION KEY 8-12
INFORMATION STATUS COMMAND 6-4
INPUTS
current 1-18
description 1-18
digital 1-18

voltage....1-18
INSTALLATION 3-7
INTERFACE....1-22
IRIG-B....1-21, 2-11

J

JUMPERS 9-1, 10-2, C-2

K

KEYPAD
ACT key.... 8-7
arrow keys 8-4
CLR key.... 8-3
data entry keys.... 8-4
description 8-3
END key 8-5
ENT key.... 8-4
INF key....8-12
PRT key.... 8-4
SET key.... 8-5

L

LIST OF FIGURES.... A-1
LIST OF TABLES.... A-1
LOCAL INTERFACE 1-22
LOCAL MAN-MACHINE INTERFACE 1-22
LOCAL USER INTERFACE
see entry for MMI
LOGGING INTO THE RELAY 4-6
LOGIC DIAGRAMS
46, 40, and 51V....1-14
64G1, 64G2, 51GN, and 24....1-15
81-O and 81-U 1-16
87G, 32, 27, 59, and AE 1-13
accidental energization....1-13
anti-motoring....1-13
current unbalance 1-14
ground overcurrent....1-15
loss of excitation 1-14
overexcitation....1-15
overvoltage 1-13
stator differential 1-13
stator ground....1-15
time overcurrent with voltage restraint....1-14
undervoltage 1-13
VT fuse failure....1-17
LOSS OF EXCITATION
description 1-8
logic diagrams....1-14
mho characteristics 2-21
periodic tests 5-8
settings....2-20
LOSS OF FIELD PROTECTION
acceptance tests 4-21, 4-22
LUI
see entry for MMI

M

MAN-MACHINE INTERFACE
see entry for MMI
MANUAL TRIP 10-9
MEMORY MAP
event report 9-14
factory settings 9-50
fault report 9-14
fault status....9-14
fixed value input registers....9-13
present values 9-13
status register....9-17
MESSAGES
miscellaneous 6-6
MMI
description 1-22
test....8-9
MMI ERROR MESSAGES 8-15
MMI MODULE 3-5
MMI STATUS AND DISPLAY TEST
acceptance tests 4-9
MODBUS
communications 9-5
funcitons....9-7
models.... C-3
MODBUS FUNCTION CODE 03/04
reading holding/input registers....9-7
MODBUS FUNCTION CODE 06
store single setpoint 9-9
MODEL
requesting....8-13
MODEM
connection 10-4
connections 9-1
DGP end....9-2
null-modem connections 9-2
PC end 9-1
settings....9-1
MODUBS FUNCTION CODE 05
force single coil....9-8
MODULES
MMI 3-5
power supply....3-4
replacing.... C-2
MOTORING POWER, TYPICAL....1-9
MOUNTING....3-7

N

NCTRATIO....2-12
NOM VOLT....2-12
NOMENCLATURE 1-2
NOMENCLATURE GUIDE 1-2
NOMINAL VOLTAGE 2-12
NON-CRITICAL FAILURES 6-5
NULL-MODEM....1-22, 9-2
NUM FLTS 1-22, 2-11

O

ORDER CODES 1-2
ORDER CODES & SELECTION GUIDE 1-2
OSCILLOGRAPHY
  data 9-16, 10-12
  description 1-22
  DGP-PC 10-12
  header 9-15
  memory map 9-15
  number of fault events 2-11
  settings 9-15
OUTLINE DRAWING 3-2
OUTPUT RELAYS
  74 1-18
  94G 1-18
  alarm 2-13
  description 1-18
  trip 2-13
OUTPUTS
  disabling 8-7, 10-9
  enabling 8-7, 10-9
OVERCURRENT
  acceptance tests 4-23
  algorithm 2-22
  logic diagram 1-14
  restraint voltages 2-22
  settings 2-22
  time-current characteristics 2-24, 2-25, 2-26, 2-27
OVEREXCIATION
  voltages 2-30
OVEREXCITATION
  algorithm 2-29
  description 1-10
  logic diagram 1-15
  settings 2-29
  time characteristics 2-31, 2-32, 2-33
OVERFREQUENCY
  acceptance tests 4-34, 4-35
  description 1-11
  logic diagram 1-16
  settings 2-36
OVERVOLTAGE
  algorithm 2-34
  description 1-11
  logic diagram 1-13
  periodic tests 5-14
  time-voltage characteristics 2-35

P

PARITY 2-11
PASSWORD
  changing 10-9
  entering 8-10
  MMI 10-12
  viewing 8-13
PASSWORDS
  changing 8-10, C-4
  default 1-1
  description 1-23
  encryption 8-17
  encryption key table 8-17
  MMI 9-24
PERIODIC TESTS
  ending 5-18
  general tests 5-1
  introduction 5-1
  measuring unit tests 5-6
  protection function tests 5-1
  relay status & MMI 5-2
  stator ground zone 1 5-11
  stator ground zone 2 5-11
  time overcurrent with voltage restraint 5-10
  volts/hertz overexcitation 5-12
PHASE 2-11
PHASE DESIGNATION 2-11
POSITIVE-SEQUENCE OVERVOLTAGE
  accpetance tests 4-31
POSITIVE-SEQUENCE PHASE ROTATION 2-11
POWER SUPPLY MODULE 3-4, C-2
PRESENT VALUES
  memory map 9-13
  primary/secondary units setting 2-10
  requesting 8-13
  viewing with DGP-PC 10-11
PRINT KEY 8-4
PRINTER 1-22
PROTECTION FEATURES 1-7
PROTECTION FUNCTIONS
  list 1-7
  setting ranges 7-2
PRT KEY 8-4
PS OUTPUT RELAYS
  description 1-18

R

RATED CURRENT 2-12
RATEDCUR 2-12
REAR VIEW 3-3
RECEIVING 3-7
REMOTE COMMUNICATIONS 1-22
  see COMMUNICATIONS
REMOTE CONTROL 1-23
REPLACEMENT PART NUMBERS C-1
RESETTING THE RELAY 8-8
REVISION HISTORY B-1
RS485 COMMUNICATIONS 9-4

S

SAMPLE GENERATOR SYSTEM 2-2
SEL TCM 2-10
SEL TVM 2-10
SELECTION GUIDE 1-2
SELF-TESTS
  description 1-19, 6-2
  run-time 1-19
  run-time background 6-3
  run-time foreground 6-3
  start-up 1-19, 6-2
SELPRIM 2-10
SEQUENCE OF EVENTS 1-20

SEQUENTIAL TRIP SUPERVISION 4-22
SERIAL CONNNECTION 10-4
SET KEY 8-5
SETTINGS
  changing with DGP-PC 10-8
SETTINGS CRC 8-9
SETTINGS KEY 8-5
SETTINGS TABLE 2-41
SINGLE LINE DIAGRAM 1-7
SOFTWARE
  see DGP-PC and Chapter 10
SPARES 6-1
SPECIFICATIONS 7-1
  burden ratings 7-1
  contact ratings 7-1
  electrical ratings 7-1
STANDARD FUNCTIONAL TESTS
  connections 4-25
STATION & GENERATOR ID REGISTER MAP 9-24
STATION ID 8-13, 10-12
  changing 10-10
STATOR DIFFERENTIAL
  algorithm 2-13
  characteristic curves 2-14, 2-15, 2-16, 2-17
  description 1-8
  logic diagram 1-13
  settings 2-13
STATOR GROUND
  acceptance tests 4-26, 4-27
  algorithm 2-28
  logic diagram 1-15
  periodic tests 5-11
  settings 2-28
  test connections 4-28
  test connections for 27TN 4-38
STATUS CHECK 5-2
STATUS FAILURES 6-6
STATUS REGISTER MAP 9-17
STOP BITS 2-11
STORAGE 3-7
SURGE GROUND CONNECTIONS 3-7
SYMBOL LEGEND FOR RELAY LOGIC 1-28
SYSFREQ 2-10
SYSTEM FREQUENCY 2-10
SYSTEM STATUS
  requesting 8-12

T

TARGET LEDs 8-2
TARGET RESET KEY 8-2
TCM 1-20
TERMINAL DESIGNATION 3-6
TEST PICKUP RELAY 1-19
TEST PLUG INSERTION 3-6
TEST PLUG MODEL C-2
TEST TRIP RELAY 1-19
THIRD HARMONIC NEUTRAL UNDERVOLTAGE
  acceptance tests 4-37
TIME
  changing 10-10
  memory map 9-24
  setting 8-8
TIME OVERCURRENT
  periodic tests 5-10
TIME SYNCHRONIZATION 1-21, 2-11
TIMESYNC 2-11
TOC GROUND OVERCURRENT
  acceptance tests 4-36
  periodic tests 5-16
TRIP CIRCUIT MONITOR 1-20
TRIP CURRENT MONITOR 2-10
TRIP RELAY 2-13
TRIP VOLTAGE MONITOR 1-20
TRIP VOLTAGE MONITORING 2-10
TROUBLESHOOTING 6-4
TURN-TO-TURN FAULTS 1-8
TVM 1-20
TYPICAL MOTORING POWER 1-9
TYPICAL WIRING DIAGRAM 1-6

U

UNDERFREQUENCY
  acceptance tests 4-32, 4-33
  description 1-11
  logic diagram 1-16
  periodic tests 5-14, 5-15
  settings 2-36
UNDERVOLTAGE
  acceptance tests 4-37
  algorithm 2-38
  cutoff 2-36
  description 1-11
  logic diagram 1-13
  periodic tests 5-16
  settings 2-38
  time-voltage characteristics 2-40
  troubleshooting C-1
UNIT ID NUMBER 2-10
UNITID 2-10
UNPACKING THE RELAY 1-1

V

VERSION
  requesting 8-13
VOLTAGE TRANSFORMER FUSE FAILURE
  see entry for VTFF
VOLTS/HERTZ EXCITATION
  trip periodic tests 5-13
VOLTS/HERTZ OVEREXCITATION
  alarm accpetance tests 4-29
  periodic tests 5-12
  trip acceptance tests 4-30
VT
  connection 2-12
  ratio 2-10
VT CONN 2-12
VT RATIO 2-10
VTFF
  acceptance tests 4-36
  description 1-11
  logic diagram 1-17
  periodic tests 5-15

settings 2-37

W

WARN 6-5
WARRANTY D-1
WIRING DIAGRAM 1-6

X

XTM TEST PLUGS
circuit connection 3-6
description 3-6
insertion 3-6

NOTES

GE MULTILIN WEBSITE

The latest product information for the DGP relay is available on the Internet via the GE Multilin home page:

http://www.GEindustrial.com/multilin



This site provides access to the following customer services:

- Digital Products Directory
  A brief description of products can be viewed online.
- Product Catalog
  Individual product brochures can be downloaded and printed
- Product Selector Guide
  A graphical tool for finding the product you are interested in
- Sales Offices
  A complete listing of world-wide sales offices
- Technical Support
  Complete contact information is available
- Instruction Manuals
  Manuals for many products are now available online
- GE Product Software
  The latest working versions of product software
- Technical Drawings
  Many technical drawings are available in either AutoCAD, CorelDRAW, or PDF formats.
- Order Codes
  Order codes for many products can be downloaded and printed
- Technical Publications
  Papers related to power management

Much more is also available. Visit us online at **www.GEindustrial.com/multilin**.