GE Consumer & Industrial

Multilin

DTP-B

Digital Transformer Protection

Instruction manual

GEK-106243E

Copyright © 2005 GE Multilin



ISO9001 REGISTERED

GE Multilin
215 Anderson Avenue
L6E 1B3 Markham, ON -CANADA
Tel: (905) 294 6222 Fax: (905) 294 8512
E-mail: gemultilin@ge.com

GE Multilin
Avda. Pinoa, 10
48170 Zamudio SPAIN
Tel: +34 94 485 88 00 Fax: +34 94 485 88 45
E-mail: gemultilin.euro@ge.com

Internet: www.GEMultilin.com

TABLE OF CONTENTS

1. GENERAL DESCRIPTION 1-1

2. APPLICATION 2-1

2.1 DESCRIPTION 2-1

2.2 CALCULATIONS 2-3

2.2.1 METHOD 2-3
2.2.2 PHASE SHIFT COMPENSATION 2-3
2.2.3 CALCULATION OF CT TRANSFORMATION RATIOS AND RELAY TAPS 2-3
2.2.4 PERCENTAGE RESTRAINT SETTING 2-5

2.3 TRANSFORMER CALCULATIONS (FIGURE 6) 2-6

2.3.1 1ST ITERATION. CALCULATIONS REFERRED TO THE TRANSFORMER SHOWN IN FIGURE 6 2-6
2.3.2 2ND ITERATION. NEW CT RATIOS FOR WINDINGS B AND C 2-9
2.3.3 PERCENTAGE RESTRAINT SETTING K_1 (FIGURE 9) 2-9
2.3.4 PERCENTAGE RESTRAINT SETTING K_2 (FIGURE 9) 2-10
2.3.5 CT CONFIGURATION SETTING 2-10

3. OPERATING PRINCIPLES 3-1

3.1 DESCRIPTION OF THE GENERAL OPERATING PRINCIPLE 3-1

3.2 MEASUREMENT ALGORITHMS 3-2

3.2.1 DIFFERENTIAL CURRENT 3-2
3.2.2 THROUGH CURRENT 3-3
3.2.3 HARMONIC RESTRAINT 3-3
3.2.4 INTERNAL PHASE SHIFT MATCHING 3-3

3.3 INTERNAL STATES 3-4

4. FUNCTIONS DESCRIPTION 4-1

4.1 PROTECTION FUNCTIONS 4-1

4.2 MONITORING AND REGISTERING FUNCTIONS 4-1

4.2.1 MEASUREMENT 4-1
4.2.2 LED INDICATORS 4-1
4.2.3 SELF-CHECKING FUNCTIONS 4-2

4.3 ANALYSIS FUNCTIONS 4-3

4.3.1 EVENT RECORDER 4-3
4.3.2 OSCILLOGRAPHY RECORDER 4-3

4.4 SETTINGS TABLES 4-4

4.5 INPUTS AND OUTPUTS 4-5

4.5.1 DIGITAL INPUTS 4-5
4.5.2 OUTPUTS 4-5

4.6 HUMAN-MACHINE INTERFACE (MMI). 4-6

4.7 REMOTE COMMUNICATIONS 4-6

5. SETTINGS 5-1

TABLE OF CONTENTS

6. UNIT CONFIGURATION 6-1

6.1 INPUTS CONFIGURATION 6-1

6.2 OUTPUTS CONFIGURATION 6-2

6.3 LEDS CONFIGURATION 6-2

7. TECHNICAL CHARACTERISTICS 7-1

7.1 MODEL LIST 7-1

7.2 TECHNICAL CHARACTERISTICS 7-2

7.2.1 MECHANICAL 7-2
7.2.2 ELECTRICAL CHARACTERISTICS 7-2
7.2.3 COMMUNICATIONS 7-3
7.2.4 STANDARDS 7-4

8. HARDWARE DESCRIPTION 8-1

8.1 PHYSICAL DESCRIPTION 8-1

8.1.1 CASE 8-1
8.1.2 ELECTRICAL CONNECTIONS 8-1
8.1.3 INTERNAL CONSTRUCTION 8-2
8.1.4 IDENTIFICATION 8-3
8.1.5 MAGNETIC MODULE 8-3
8.1.6 PROTECTION CPU PROCESSING BOARD 8-4
8.1.7 COMMUNICATIONS CPU MODULE 8-4
8.1.8 INPUTS/OUTPUTS MODULE. 8-4
8.1.9 POWER SUPPLY 8-5
8.1.10 SAMPLE & HOLD MODULE 8-5

8.2 RECEPTION, HANDLING & STORAGE 8-6

8.3 INSTALLATION 8-6

9. ACCEPTANCE TESTS 9-1

9.1 CONNECTIONS 9-1

9.2 VISUAL INSPECTION 9-1

9.3 INSULATION TESTS 9-1

9.4 POWER SUPPLY 9-2

9.5 MEASUREMENT CHECK 9-2

9.6 DIGITAL INPUTS CHECKING 9-3

9.7 OUTPUTS CHECKING 9-3

9.7.1 TRIP OUTPUTS CHECKING. 9-3
9.7.2 ALARM OUTPUTS CHECKING. 9-3
9.7.3 CONFIGURABLE OUTPUTS CHECKING. 9-3

9.8 COMMUNICATION PORTS CHECKING 9-4

9.9 KEYPAD, DISPLAY, AND LEDS CHECKING. 9-4

9.10 OPERATIONS 9-5

9.10.1 TIME SETTING. 9-5

9.10.2COMMUNICATIONS TRIGGER. 9-5
9.11 PERCENTAGE RESTRAINT CHECKING 9-5
9.12 HARMONIC RESTRAINT CHECKING 9-5
9.13 INSTANTANEOUS FUNCTION CHECKING 9-6

10. INSTALLATION AND MAINTENANCE 10-1
10.1 INSTALLATION 10-1
10.2 CONNECTION TO GROUND AND SUPPRESSION OF DISTURBANCES 10-1
10.3 MAINTENANCE 10-1

11. KEYBOARD AND DISPLAY 11-1
11.1 MENU TREE 11-2
11.2 SETTINGS GROUP 11-4
11.3 INFORMATION GROUP 11-8
11.4 OPERATIONS GROUP 11-10
11.5 SINGLE KEY OPERATION 11-11
11.6 CONFIGURATION MENU 11-12

12. FIGURES 12-1

LIST OF TABLES

Table I: Internal Communications States
Table II: Internal Protection States
Table III: Settings common to all tables
Table IV: Independent Settings for each table

LIST OF FIGURES

Fig. 1: External connections
Fig. 2: Panel drilling dimensions
Fig. 3: RS-232 Connection
Fig. 4: Dimensions diagram
Fig. 5: Front view
Fig. 6: Sample transformer for the calculation of settings
Fig. 7: Operating principles of the differential protection
Fig. 8: Block diagram of the protection
Fig. 9: Percentage Characteristic

1. GENERAL DESCRIPTION

During the last years, new technologies have achieved an important improvement in the concept of function integration between the different components of electrical systems. There are several reasons for that integration:

- Reduce the investment in new equipment.
- Optimize the use of the existing installations.
- Improve the energy management system.

This function integration not only includes the high and low voltage switchgear protection and control devices, protection of different elements, signalling and alarms of a substation, but also the monitoring of all elements, the analysis of the great amount of available information (events, alarms, oscillography, load and demand profiles), and certainly innovative functions, such as substation maintenance, adaptive protections, etc.

The DTP is a digital relay that provides differential (87) and backup instantaneous (87B) three phase protection functions for power transformers. Different models of the DTP are available for protecting and monitoring transformers with two, three, or four windings.

This equipment incorporates the following functions:

a) Protection

- Totally digital three phase differential protection (87) with percentage restraint and harmonic restraint (second and fifth harmonic).
- Programmable backup differential instantaneous protection (87B).
- Additional dynamic harmonic restraint (innovative function compared to static harmonic restraint)
- Digital filtering of the zero-sequence component of the applied current.
- Internal phase shift compensation system with obtaintion of the currents for each winding and phase, from the line currents.

b) Monitoring and register

- Line current (module and argument), differential current (fundamental, second and fifth harmonic) and through RMS current measurement.
- 17 LED indicators (16 of which can be configured by the user).
- Built in self-checking unit.

c) Analysis

- Historical event recorder.
- Oscillography recorder.
- Alarm recorder.

d) Communication Interfaces

The DTP has three communication ports, one on the front of the relay, and two on the rear. The front port (PORT 1) and one of the rear ports (PORT 3) are RS232, while the other rear port (PORT 2) can be RS232, RS485, glass or plastic fiber optics.

The following software is associated to the DTP:

- **GE-LOCAL** Communications Software, allowing the user to monitor and modify the protection settings, alarms, internal status, etc.
- **GE-INTRO** Configuration Software, used for the configuration of inputs, outputs, alarms and LED indicators.
- **GE-OSC** Oscillography Software, for monitoring and analyzing oscillography records.

These software packages are part of GE-NESIS (General Electric NEtwork Substation Integrated System)

2. APPLICATION

2.1 DESCRIPTION

The current transformer ratios and relay taps must be selected to obtain the maximum sensitivity without risking relay measurement overflow, thermal overload of the relay or current transformers. Due to the low level of load presented by the relay, which has a permanent thermal capacity of 4 times In, and a transient capacity of 100 x In, it is very improbable to cause an overload this way.

Therefore, the current transformer ratios in the various windings of the power transformer should be selected with the following points in mind:

- The highest sensitivity is obtained by selecting the lowest relay tap and the lowest CT ratio. However, the lowest CT ratio and the lowest relay tap may not be compatible with some of the following restrictions. Where a choice is available of increasing either the CT ratio or the relay tap, it is preferable to increase the CT ratio instead of the relay tap. Since the relay burden is usually smaller than the lead burden, increasing the CT ratio tends to improve the relative performance of the CTs. This is a result of reducing the maximum secondary fault current and increasing the accuracy of the CTs.
- The CT secondary current must not exceed the continuous thermal rating of the CT secondary winding.
- The relay current corresponding to the maximum kVA (on a forced-cooled basis) of the power transformer must not exceed 4 times the nominal current rating of the DTP relay (5 A or 1 A), which is the continuous thermal capacity of the DTP relay.
- The CT ratios must be high enough so that the secondary currents will not damage the relay under maximum internal fault conditions. The DTP relay can withstand 100xIn for 1 second, nevertheless, the dynamic limit current is sensibly higher.
- The relay current corresponding to rated kVA of the power transformer (on a self cooled basis) must not exceed the relay tap value selected. Otherwise magnetizing inrush current might operate the backup instantaneous function (87B). If the power transformer does not have a self-cooled rating, the user should contact the manufacturer for the “equivalent self-cooled rating”.
- The DTP relay’s backup instantaneous function (87B) can be set to operate for differential currents from 4 to 12 times the selected relay tap. If in-service experience results in instantaneous function operation during magnetizing inrush conditions, such operation can be avoided by changing the setting to a value greater than 8.
- The CT, on its full-ratio or the tap chosen, must be able to supply the relay with a current of 8 times the selected tap, with an error of less than 20% of the total current. If the current transformers produce an error of greater than 20% at less than 8 times tap value, the harmonic content of the secondary current may be sufficient to prevent the differential protection from operating. Since the backup instantaneous function is activated by the fundamental component and is not affected by the harmonic content of the differential current, the instantaneous function will operate to produce a relay trip even if appreciable CT saturation occurs for an internal fault that produces current above the instantaneous function’s recommended pickup setting of 8 times tap.
- The CT ratios must be selected to provide balanced secondary currents for the case of an external fault. Since it is rarely possible to match the secondary currents exactly by selection of CT ratios, ratio matching taps are provided in the relay to match the secondary currents within very narrow margins. When the power transformer is equipped with Load Tap Changing (LTC) a close match cannot be obtained at all points of the ratio-changing range. In this case, the secondary currents are matched at the middle of the range and the relay’s percentage restraint is relied upon to prevent relay operation on the unbalanced current when the LTC is at the ends of the range.

- In some applications, one or more of the power transformer's windings may be connected to the power system via two breakers. An example is a ring bus. In this case, the CT ratios must be selected so that the secondary windings will not be thermally overload on load current flowing around the ring bus in addition to the transformer load current. In such cases, it is recommended that each of the two CTs be connected to separate relay restraint windings to assure adequate restraint for heavy through-fault current flowing around the ring bus.
- Protecting two parallel transformer banks with one DTP relay is not recommended since the sensitivity will be reduced. Additionally, if the two banks can be switched independently, there is a possibility of false operation when the inrush current of one transformer bank provokes a "sympathetic inrush current" into the bank already energized. In this case, the harmonics tend to flow between the two banks with the possibility that there will be insufficient harmonics in the relay current to restrain the relay. Should one DTP relay be used to protect two independently switched parallel transformers, the DTP relay's harmonic restraint (adjustable from 12% to 50%) may be increased to preclude a misoperation.

2.2 CALCULATIONS

2.2.1 METHOD

The calculations required to determine the proper relay taps and CT ratios are described below. A sample calculation, for the transformer shown in Figure 6, is presented.

2.2.2 PHASE SHIFT COMPENSATION

The secondary currents applied to the relay must be in phase if the EXTERNAL COMPENSATION mode is used. The differential and through currents are obtained directly from the relay input currents, and any required phase shift compensation or zero-sequence current elimination must be obtained by proper connection (i.e., either wye or delta) of the current transformers.

In the INTERNAL COMPENSATION mode, phase shift compensation and zero-sequence current elimination are taken care of in the DTP relay

2.2.3 CALCULATION OF CT TRANSFORMATION RATIOS AND RELAY TAPS

For this calculation, the following steps must be taken:

- For each winding, determine the maximum line current (Ip max.) based on the maximum forced-cooled kVA rating of the power transformer:

$$\text{Ip max} = \frac{\text{(Maximum transformer kVA)}}{\sqrt{3} \times \text{(kV - LL)}}$$

- For each winding, determine the rated line current (100%Ip) based on the full self-cooled kVA rating (or the “equivalent self-cooled rating”) of the power transformer.

$$\text{100\% Ip} = \frac{\text{(100\% transformer kVA)}}{\sqrt{3} \times \text{(kV - LL)}}$$

These calculations do not necessarily mean that each winding is going to carry these currents continuously. This is only a convenient way of calculating the currents in the other windings in proportion to their voltage ratings. This is the requirement for selecting the relay tap settings so that the relay will not operate for an external fault.

- Select CT ratios so that the secondary current corresponding to Ip max does not exceed the CT secondary thermal rating. Also, select CT ratios so that the relay currents can be properly matched by means of the relay taps.

When the DTP is set in INTERNAL COMPENSATION mode, the wye-delta changes imposed by the transformer time group as detailed in the PHASE SHIFT COMPENSATION section can be carried out by settings in the relay through the front keypad or the communications program. It is not necessary to perform these changes on the CT secondaries, which can always be wye connected. In this case, the taps will be chosen on the basis of currents resulting from the CT’s wye configuration, no matter how the transformer winding is connected (wye or delta). By

means of independent settings we will inform the relay about this connection, so that the DTP will perform internally the magnitude corrections resulting from changes wye-delta and vice-versa.

- Determine the burden on each CT using the following expressions:

a) For wye connected CTs:

$$Z = B + \frac{N \times e + 2.5\, f}{1000} + 2.27\, R \quad \Omega$$

b) For delta connected CTs:

$$Z = 2B + \frac{N \times e + 2.5\, f}{1000} + 2.27 \quad \Omega$$

where:

B = DTP relay total burden (0.04 Ω approx.).

N = CT secondary turns

e = CT resistance per turn in milliohms.

f = CT resistance per lead in milliohms.

R = one-way control cable lead resistance (at 75ºC)

The multiplying factors associated with f and R account for two cable leads instead of one, resistance value increase due to temperature rise, and the resistance of the longest CT leads.

- Determine the CT secondary current for 8 times the tap value:

  Is = 8 x relay tap

***Note**: For the assumed fault, all of the fault current is supplied by one CT. Consequently, the CT current and the relay current are the same whether the CT is connected in wye or delta.*

- Determine the CT secondary voltage required at 8 times the tap value:

  Esec = Is x Z

- From the excitation curve of the CT that is being used, determine the excitation current (Ie) which corresponds to the voltage Esec.
- Determine the percent error in each CT through the following expression:

$$\% \text{ error} = \frac{Ie}{Is} \times 100$$

This value must not exceed 20% for any set of CTs. If it does, it will be necessary to choose a higher CT ratio and repeat the calculations for selecting the relay tap, mismatch error, and CT ratio error. Please refer to the example shown in section 2.3. TRANSFORMER CALCULATIONS

2.2.4 PERCENTAGE RESTRAINT SETTING

The appropriate percentage restraint K_1 is determined by the sum of:

- The maximum range of the tap changer, in percent.
- The maximum mismatch error of the relay taps, in percent.

In general, if the total error does not exceed 20% use a restraint of 25%. Since the DTP relay's percentage restraint can be adjusted in steps of 0.1%, a very precise setting can be selected.

The second characteristic K_2 available in the relay must be set according to the maximum through current during external faults, where there might be partial or total CT saturation.

2.3 TRANSFORMER CALCULATIONS (FIGURE 6)

2.3.1 1ST ITERATION. CALCULATIONS REFERRED TO THE TRANSFORMER SHOWN IN FIGURE 6

2.3.1.1 Matching Error

1.	Transformer winding	**A**	**B**	**C**
2.	Ipmax=5000/√3x (kV-LL)	21.9	43.8	87.6
3.	100%Ip = 4000/√3 x (kV-LL)	17.5	35	70
4.	Current CT Ratio	20	20	40
5.	Isec max (less than 5 A)	1.10	2.19	2.19
6.	100% Isec	0.87	1.75	1.75
7.	CT Connections	wye	wye	wye
8.	Relay currents for 100% Isec	0.87	1.75	1.75

Select a relay tap for one of the windings (A, B, or C) and calculate the ideal relay taps for the other windings using:

$$\text{Ideal tap} = \frac{\text{Relay current in next winding}}{\text{Relay current in selected winding}} \times \text{selected relay tap}$$

9.	Ideal relay taps (select A= 2.5):	2.5	5.03	5.03

Select the closest available tap to the ideal taps

10.	Actual relay taps (In=5)	2.5 (0.5xIn)	5.0 (1.0xIn)	5.0 (1.0xIn)

11. Check the mismatch error:

$$\text{Windings A-B: } \frac{5.00/2.5 \;-\; 1.75/0.87}{5.00/2.5} = -0.005\%$$

$$\text{Windings B-C: } \frac{5.00/5.00 \;-\; 1.75/1.75}{5.00/2.5} = 0.000\%$$

$$\text{Windings C-A: } \frac{5.00/2.5 \;-\; 1.75/0.87}{5.00/2.5} = -0.005\%$$

This check is O.K. since all of the mismatch errors are less than 5%.

In case of obtaining a high error, the unbalance will always be covered by the percentage restraint setting, although it is not recommended to have errors over 20% (including the variation due to the possible tap changer of the transformer). Nevertheless, the DTP relay has a high tap range, in 0.01 In steps, so that there will always be available taps very close or exact to the current values, reaching minimum errors.

NOTE 1: *For this example, a multi-ratio toroidal transformer type ANSI C100 has been chosen. In other cases, the CT ratio can be fix, or the transformers can be dedicated.*

2.3.1.2 Calculation of CT Ratio Error

1. CT Burdens

Assumptions: One-way cable resistance R= 0.25 ohms
CT resistance per turn e= 4.1 milliohms (100/5 CT)
e= 2.6 milliohms (200/5 CT)
CT resistance per lead f= 25 milliohms

Winding A:

$$Z = 0.04 + \frac{(20 \times 4.1 + 2.5 \times 25)}{1000} + 2.27 \times 0.25 = 0.75$$

Winding B:

$$Z = 0.04 + \frac{(20 \times 4.1 + 2.5 \times 25)}{1000} + 2.27 \times 0.25 = 0.75$$

Winding C:

$$Z = 0.04 + \frac{(40 \times 2.6 + 2.5 \times 25)}{1000} + 2.27 \times 0.25 = 0.77$$

2.	Impedance (ohms)	0.75	0.75	0.77
3.	Current I at 8 times the tap value (A)	20.0	40.0	40.0
4.	Required Es (Is xZ) for the CT	15.0	30.0	30.0
5.	Required exciting current, Ie (from the excitation curve)	0.87A	>100A	0.26A
6.	Ration error in %	4.35%	>100%	1.08%

The excitation current in winding B is excessive; therefore a higher CT ratio must be selected. The CT ratio for winding B will be increased and the matching error and CT Ratio error will be checked again.

2.3.2 2ND ITERATION. NEW CT RATIOS FOR WINDINGS B AND C

2.3.2.1 Matching Error

Transformer winding	A	B	C
1. 100% Ip	17.5	35	70
2. New CT ratio	20	40	60
3. 100% Isec	0.87	0.87	1.17
4. Relay currents for 100% Isec	0.87	0.87	1.17
5. Ideal relay taps: (select C=4.0)	2.97	2.97	4.0
6. Actual taps:	3.0	3.0	4.0

7. Check that the mismatch errors are: 0% (AB), 1.01% (BC), and 1.01% (CA).

2.3.2.2 CT Ratio Error

	A	B	C
1. Impedance (ohms)	0.75	0.75	0.77
2. Current at 8 times the tap value	24	24	32
3. Required Es for CT	18	18	24.64
4. Required Ie	1	0.2	0.1
5. Ratio error in %	4.16%	0.83%	0.31%

All errors are less than 20%, therefore the CT ratios are OK.

2.3.3 PERCENTAGE RESTRAINT SETTING K_1 (FIGURE 9)

Maximum tap changer range 10.00%

Maximum mismatch error: 1.01%

TOTAL 11.01%

Set the percentage restraint K_1 so that:

$$11.01\% < K_1 \leq 25\%$$

2.3.4 PERCENTAGE RESTRAINT SETTING K_2 (FIGURE 9)

The percentage restraint setting K_2 is implemented in DTP-B relays in order to deal with unbalances caused by saturated CTs due to high currents borne during external faults.

The break point between both slopes K_1 and K_2 must be set to a current value (times the tap) higher than the forced cooling situation, and lower than the admitted emergency overload level (momentaneous).

The Percentage Restraint Setting K_2 can be set to the same value as K1, or to a higher value, depending on the previsions of possible CT saturations.

2.3.5 CT CONFIGURATION SETTING

Taking into consideration that the polarity signals P1 are on the busbar side in all windings:

1. A Current Transformer will have **Wye-Wye-Zero** configuration (Yy∅) when its secondary terminal S1 is wired to the **positive terminal** of the corresponding phase in the relay.
2. A Current Transformer will have **Wye-Wye-Six** configuration (Yy6) when its secondary terminal S1 is wired to the **negative terminal** of the corresponding phase in the relay.

3. OPERATING PRINCIPLES

3.1 DESCRIPTION OF THE GENERAL OPERATING PRINCIPLE

The basic principle of current differential protection is illustrated in Figure 7.

When equal currents exist on both sides of the protected element in the directions indicated by Figure 7, as in the case of an external fault, no operate current will flow in the relay.

In the case of unequal currents, the difference between I1 and I2 is the operate current. When an internal fault occurs a direction reversal occurs, as reflected in Figure 7. Assuming perfect CT performance, any overcurrent relay with adequate characteristics can be used as the differential relay.

For high magnitude external faults, the impossibility of obtaining a completely balanced differential circuit due to the differences in the CT outputs makes the special characteristics provided in the DTP necessary. To prevent operation on these unbalances, a current differential relay with percentage restraint is used. The differential or operate current is a variable quantity, due to the effect of the restraining currents. The smaller of the restraint currents is called the “through current.” The differential current required to operate the relay is a fixed percentage of the through current. As the through current increases, the level of differential current must increase to operate the relay.

Figure 8 represents the block diagram of the relay.

The operation of the DTP relay is described by the following equation:

$$[\, G_d\,(I_1 - I_2)_f - G_f\,(I_1 + I_2)_{f+h} - G_a\,(I_1 - I_2)_h - S\,] > 0$$

For a three-phase transformer with two windings, the relay contains two current transformers per phase, one on each side of the transformer. From these currents the differential current and the through current are calculated. Additionally, each phase current is filtered, which will be explained later on, to extract select harmonics. The magnitude of these harmonics is used to discriminate between fault conditions and the inrush of exciting current to the transformer when it is energized.

The first term in the equation corresponds to the operate current. This corresponds to the fundamental component of the differential current multiplied by the coefficient Gd. In the block diagram we assume, for purposes of simplification, that Gd = 1. The 2nd term in the equation represents the percentage restraint component. This signal is proportional to the through current and the corresponding restraint gain Gf. In the block diagram this gain is indicated by the term GIS. The third term represents a restraining quantity consisting of 2nd and 5th harmonics of the differential current multiplied by harmonic restraint gain Ga. In the block diagram Ga is indicated by the gains G_2 and G_5.

Any DC component which is present is blocked by the input transformers and by the digital filters. Therefore, the DC component does not produce any significant effect (overreach). The harmonic content of the inrush current for a typical power transformer is shown below:

HARMONIC	% OF FUNDAMENTAL
2º	63.0 %
3º	26.8 %
4º	5.1 %
5º	3.7%
6º	2.4 %

This permits the harmonic restraint principle used in this relay to distinguish between faults and transformer inrush. The ability to select the magnitude of percent harmonic restraint permits the adaptation of this protection to any type of power transformer.

The last term, S, represents the sensitivity of the relay. This is the differential current at which the relay will trip in the absence of through current and harmonics. An operation occurs If the combination of the three factors, one operate and two restraints, is a positive value greater than the preset sensitivity.

3.2 MEASUREMENT ALGORITHMS

The DTP includes a series of measurement functions in addition to the protection and control functions. The differential current and through current in each winding of each phase are measured and displayed.

The DTP is a digital microprocessor-based relay and performs all signal processing via software. It performs simultaneous sampling (necessary to correctly measure the phase of the signals) of all the signals at a rate of 16 samples per cycle using an analog to digital converter of high precision and resolution. This provides unprecedented benefits which permit among other things:

- High resolution for the protection settings.
- A very precise measurement in a wide dynamic range.
- Phase shift compensation within the relay.
- A zero-sequence filter to avoid undesired trips in certain situations.
- High calibration stability which avoids the need for periodic recalibrations.
- Self-checking.
- Possibility to include oscillography.
- Possibility of hourly clock set.
- Expanded setting ranges for taps, instantaneous levels, sensitivity, harmonics and percentage restraint such this relay can be applied to any type of transformer.
- Low burden.
- Permits the inclusion of non-linear algorithms which avoid undesired trips in some situations, especially during inrush with or without load.
- Makes possible a level of integration superior to that of analog models.
- The division of protection and communications functions provides an additional level of redundancy.
- Fault reports.

3.2.1 DIFFERENTIAL CURRENT

The differential current is defined as the difference of the restraint currents. For a two winding transformer, as illustrated in Figure 7, the differential current is I1 - I2. From here on, all currents will be expressed as a multiple of relay tap. The fundamental component (50 or 60 Hz depending on the setting) of the differential current is obtained via a Discrete Fourier Transformation (DFT). The DFT provides excellent frequency filtration, making the differential current measurement immune to noise, DC components, and wave distortion. This gives the digital DTP relay a clear advantage over other analog and hybrid (analog measurement and microprocessor support for other functions) models.

This is illustrated in Figure 8 which is the relay block diagram. The differential current passes through a digital filter which obtains the fundamental component (performed by the DFT). Note that the instantaneous trip function uses the fundamental component of the differential current. This avoids undesired trips in certain situations and provides a high level of reliability and selectivity if the instantaneous trip level is properly adjusted.

3.2.2 THROUGH CURRENT

Through current is defined as the smallest of the restraint currents for a through current condition (i.e., load flow or an external fault). This can be understood intuitively as the current that passes through the transformer. For an internal transformer fault where current flows in on each winding the through current is zero. Through current is calculated using a special non-linear algorithm which permits compliance with the previous definition. Through current is computed as a RMS value. This takes into account not only the fundamental value but also all of the harmonics up to the fifth (higher order harmonics are blocked by the low-pass anti-aliasing filters). The algorithm used to calculate the RMS value permits a high level of accuracy in the through current measurement.

3.2.3 HARMONIC RESTRAINT

The harmonic restraint principle allows the relay to distinguish between faults and transformer inrush current. Figure 8 shows that a restraint proportional to the second and fifth harmonics of the differential current is used. The harmonics are extracted using DFTs. A high rate of sampling guarantees an accurate measurement and complies with the Nyquist criteria. The total harmonic restraint is the RMS value. This RMS value is equal to the square root of the sum of the squares of the second and fifth harmonics.

$$I_h = \sqrt{(I_2^2/A_2^2 + I_5^2/A_5^2)}$$

Where:

I_h Total harmonic restraint current

I_2 Second harmonic current

A_2 Second harmonic percentage restraint

I_5 Fifth harmonic current

A_5 Fifth harmonic percentage restraint

3.2.4 INTERNAL PHASE SHIFT MATCHING

The DTP relay allows internal compensation for the phase shift across the power transformer. This is accomplished by settings that define the “connection group” of each power transformer winding, as well as the connections of the current transformers. If this compensation is performed external to the relay, so that currents arrive “in-phase”, set the compensation setting to EXTERNAL. This is performed under general settings. With this setting the relay will not filter out the zero-sequence component of current. This must be done externally via proper CT connections. This setting is especially useful for testing the relay with single phase and three test sources that supply in-phase currents.

If we want the relay to perform the compensation, we must set the compensation setting to INTERNAL. In this case, the main CT’s must always be wye connected. When in the INTERNAL mode, filtering of the zero-sequence component is performed by the relay.

3.3 INTERNAL STATES

The DTP is a digital relay that takes the input signals, processes them according to defined algorithms, and activates the outputs according to the input conditions. Much of the information managed by the equipment can be used for creating special and specific configurations for each application, using the GE_INTRO Configuration Software. With all this information, the user can configure outputs, inputs, define alarms and configure LEDs, using the AND, OR and NOT gates logic.

The DTP stores this information as “internal states”. These are logic states of internal variables, which can take “0” or “1” values. For example, a typical internal status is the out of service alarm. If activated by a setting, its associated internal status takes the value “1”, and it can be taken to an output contact, an alarm, or a LED indicator.

In the same way, if a digital input activates, its “internal state” becomes “1”, and it can also be taken to an output, input, event or LED.

AND, OR, and NOT gates logics can also be performed with the internal states, for example, activating an output when a unit’s pickup conditions exist, and activating an input, blocking the units as a consequence of conditions that are external to the protection.

If these “internal states” are properly used, really complex schemes can be achieved.

The DTP has two types of internal states:

- Internal protection states
- Internal communication or general states

The internal communications states are shown in the following table:

TABLE I. INTERNAL COMMUNICATIONS STATES

INTERNAL STATE	INTERNAL STATE
Mode: Remote (1) Local (0)	LED 5
Rear connection	LED 6
Front connection	LED 7
Date/time alarm	LED 8
Serial EEPROM alarm	LED 9
Protection link	LED 10
IRIG-B link	LED 11
Events	LED 12
LED 1	LED 13
LED 2	LED 14
LED 3	LED 15
LED 4	LED 16

The internal protection states are shown in the following table:

TABLE II. INTERNAL PROTECTION STATES

Internal State	Internal State	Internal State
Program initiate	Parallel E2PROM alarm	AND1
Settings change	Serial E2PROM alarm	AND2
Configuration change	Out of service	AND3
External trigger	Default general settings	AND4
Communications trigger	Default table 1 settings	AND5
Input 7	Default table 2 settings	AND6
Input 6	Default table 3 settings	AND7
Input 5	Tripping not permitted	AND8
Input 4	Buchholz Alarm	AND9
Input 3	Temperature Alarm	AND10
Input 2	Tripping Contact	AND11
Input 1	Active Table 1	AND12
87B A Trip	Active Table 2	AND13
87B B Trip	Active Table 3	AND14
87B C Trip	New events	AND15
87 A Trip	Trip Block	AND16
87 B Trip		
Buchholz Trip		
Temperature Trip		

4. FUNCTIONS DESCRIPTION

4.1 PROTECTION FUNCTIONS

The DTP has two differential protection functions:

- Function 87 with percentage restraint and harmonic restraint (second and fifth harmonic).
- Programmable instantaneous protection (87B) for differential current.

Their operation and application is described in sections 2 and 3.

The percentage restraint characteristic is composed of two protection zones. The inflexion point between them, and the different slopes, can be configured by settings. If only one protection zone is required, the same slope must be configured for both zones.

4.2 MONITORING AND REGISTERING FUNCTIONS

4.2.1 MEASUREMENT

The DTP relay can measure the following magnitudes:

- Line current (module and argument for each phase and winding)
- Differential and through current for each phase.
- Second and fifth harmonic current for each phase.

These measurements can be accessed either locally, on the liquid crystal display (LCD) on the front of the relay, or via the GE_LOCAL communication software, in the measurements screen. The line current measures offered by the equipment are affected by the CT ratios defined in the general settings (CT RATIO X DEV).

The line current arguments take as reference phase A (0º) of the transformer's primary winding. **Therefore, this phase must be present so that the measurements of the arguments are coherent**.

4.2.2 LED INDICATORS

An internal states matrix stores the digital information for all the units (inputs, pickups, alarms, etc.). The digital signals on this matrix are grouped in groups of 16 signals; up to a total of 10 groups; the final group corresponds to the 16 AND gates definable using the programmable logic of GE_INTRO configuration software. Therefore, the selected signals, or the result of an AND gate from a group, can be taken to this last AND1....AND16 group.

The DTP unit has a total of 17 LED indicators, one fixed bicolour assigned to the critical alarm function of the unit and 16 red LED indicators, arranged in one column. They can be configured using the GE-INTRO configuration software to any of the user definable alarms (32 protection alarms and 16 communication alarms for 2 and 3 windings models, or 16 protection alarms and 16 communication alarms for 4 windings models) assigned from among the protection and communication states. To define each alarm, the user can use 16 inputs OR gates. All the inputs to an OR gate must belong to the same group in the states matrix. Similarly, each LED can be configured to have memory in the absence of auxiliary power supply (the status of the LED with memory is registered on the EEPROM memory). They can also be configured to blink when turned on.

There is a test option for the LEDs, lighting them all up when the TARGET RESET button is pressed. When this button is held down the LED indicators are reset.

The DTP units are supplied from the manufacturer with the following default configuration of the LEDs:

LED No	DESCRIPTION	LED No	DESCRIPTION
1	87 A Trip	9	Temperature Alarm
2	87 B Trip	10	Temperature Trip
3	87 C Trip	11	Out of Service
4	87B A Trip	12	Trip not permitted
5	87B B Trip	13	EEPROM Alarm
6	87B C Trip	14	Date & Time Alarm
7	Buchholz Alarm	15	Internal communication
8	Buchholz Trip	16	Remote mode

4.2.3 SELF-CHECKING FUNCTIONS

As an advantage of its digital technology, the DTP system incorporates self-checking functions, which guarantee the correct performance of the unit and will block the operation in case of internal errors.

These self monitoring checks are carried out both when the unit is started up and during normal operation. The checks are carried out on the internal power supply, program memory (ROM), working memory (RAM), oscillographic memory (RAM) and settings and calibration memory (EEPROM).

In addition there is a hardware test for the LED indicators, which light them all up when the button TARGET RESET is pressed. If the button is kept pressed down for more than one second the memory for all the indicators will be reset.

4.3 ANALYSIS FUNCTIONS

4.3.1 EVENT RECORDER

The DTP equipment keeps a record of the last 166 events and stores the following information: date and time (1 msec. resolution), the type of event, the value of the differential and through currents measured at the time the event occurred, and the internal states matrix of the unit.

This event recorder is stored in a non-volatile memory and can be maintained indefinitely, even with no power supply.

The generated events are associated to the internal protection and communication states.

4.3.2 OSCILLOGRAPHY RECORDER

The DTP unit stores up to 4 oscillography registers, with a resolution of 16 samples per cycle. Each register has a maximum capacity of 66 cycles. The number of pre-fault cycles can be selected from 2 to 10 cycles. Each of the registers includes the following information:

- Instantaneous values for current inputs (I_A, I_B, I_C)
- Digital information: Status of protection functions.
- Date and time.
- Causes that generated the oscillographic register.
- Active settings in the moment of the register.

The causes that can generate the oscillography trigger are the following:

87B phase A Trip

87B phase B Trip

87B phase C Trip

87 phase A Trip

87 phase B Trip

87 phase C Trip

Buchholz Trip

Overtemperature Trip

Input Trigger

Communications Trigger

There is a mask that can be configured (Oscillography Mask Settings Group) and that determines which functions or internal trips start the oscillography. It also can either be started by a configurable digital input, by communications or directly from the MMI.

The oscillography registers are retrieved and converted into a COMTRADE IEEE standard format file using the GE-LOCAL communications program. They can be visualized using the GE-OSC program, or any other program that accepts the COMTRADE IEEE C37.111-1991 International Standard format or ASCII files (for example EXCEL™).

4.4 SETTINGS TABLES

The DTP has three independent settings tables, stored in non-volatile memory, so they are kept even if there is no auxiliary voltage. Only one settings table is active each time, and this is the one used by the system for performing the different functions.

Of all the existing settings in a DTP unit, there are several generic groups (General Settings, Active Table, Self Settings, Oscillography Masks and Permissions for each Function), which are common to all the settings tables, while the Differential Function Settings group, is accessed separately for each table.

There is a setting called “ACTIVE TABLE” that allows to select the active settings table in each moment.

There is also a way to change the settings table using up to 2 digital inputs, called “TABLE 0 SELECTION” AND “TABLE 1 SELECTION”. These allow up to 4 different combinations, from 0 to 3. In order to operate this way, the inputs must be configured to perform the settings table change. For applications requiring fewer tables (up to 2), only one input needs to be used.

The selected combination is obtained from the binary codification of the two mentioned inputs (please refer to the following table). “0” means selecting the table indicated in the “ACTIVE TABLE” setting, and numbers 1 to 3 select tables 1 to 3 respectively.

Number	Selection Input 1	Selection Input 2	Active Table
0	0	0	Selected by setting
1	0	1	1
2	1	0	2
3	1	1	3

***NOTE**: If the table control option is selected by these inputs, this selection will have priority over the “ACTIVE TABLE” setting, and the used table will be determined by the status of the digital inputs.*

4.5 INPUTS AND OUTPUTS

4.5.1 DIGITAL INPUTS

The DTP has 7 digital inputs (with a common), all of them configurable by the user with the GE_INTRO configuration software. One of the following values can be assigned to each input:

- Unused input
- External Trigger (P)
- Table 0 Selection (L)
- Table 1 Selection (L)
- Latching relay reset. (L)
- Buchholz Alarm (L)
- Buchholz Trip (L)
- Overtemperature Alarm (L)
- Overtemperature Trip (L)
- Trip block (L) (Affecting only functions 87 and 87B)

The external connections diagram, in figure 1, shows the default inputs configuration.

***NOTE**: (P) means that the function assigned to the input is activated by pulse, and (L) means that the function is activated by level, that is, while power supply is applied to the input, and is deactivated when this power supply stops.*

4.5.2 OUTPUTS

The DTP has 13 outputs as follows:

- 4 trip
- 1 alarm
- 8 configurable outputs.

The technical characteristics of the outputs are explained in section 6.

The configurable outputs can be programmed using a logic based on the internal protection states (pick-ups, trips, alarms, etc.). The internal states of the DTP can be used to carry out logical operations NOT, AND, and OR. This gives a great flexibility to the unit.

The output configuration is done using different levels. At the first level it is possible to use AND gates of up to 16 signals. The output is incorporated into the states matrix so that it can in turn be used in next AND gates of up to 16 inputs. This process can continue until the 16 ANDs are used.

Once the AND gates have been configured it is possible to create a second level with OR gates of 16 inputs limited to the established groups of bytes, and whose logical outputs are assigned to physical outputs of the unit.

The default output configuration is included in the external connections diagram in figure 1.

4.6 HUMAN-MACHINE INTERFACE (MMI).

The DTP unit includes as standard a 20 key keyboard and a 2-line liquid crystal display (LCD) with 16 characters per line. This display has highly reliable LED diode back lighting (the screen brightness can be adjusted on the rear of the front board).

By means of this interface the user can change the settings, visualize measurements, carry out operations and access information stored in the unit. The functions of this local interface and how to use it are described in the section KEYBOARD AND DISPLAY.

4.7 REMOTE COMMUNICATIONS

The relay has 2 serial gates and three connectors. Gate 1 can be reached from the front of the relay in connector 1 (PORT 1 connector) or from the back (PORT 2 connector). The second gate can be reached from connector 3 (PORT 3 connector) which is located on the rear.

There are different models each with a different physical connection for the PORT 3 connector (RS-232, RS-485 or fiber-optic). In the "RS232" models the three connectors are RS232. In the “RS232 and RS485” models, PORT1 and PORT2 are RS232, while PORT3 is RS485. In the "RS232 and fiber-optic" models the PORT1 and PORT2 connectors are RS232 while the PORT3 connector is replaced by a fiber-optic connector.

PORT 1 connector has priority over PORT 2 connector and is selected when the DCD (Data Carrier Detect) signal is activated. Figure 3 illustrates how to make the connections to a personal computer.

Gate 1 (PORT 1 and PORT 2 connectors) and 2 (PORT 3 connector) are independent and the unit can serve them simultaneously.

The communications protocol (MLINK) is the same as that used for the rest of the DDS System GE Digital Protections, and requires the use of the GE-LOCAL software. The protocol is reliable and allows communication with different protection systems. It guarantees very efficient data transfer (especially for the oscillography and other large files) along with error detection and automatic communication recovery.

The status of the local/remote communication is indicated on the front of the unit by LED indicator 16 (the last LED in the right-hand column.) Local communication refers to communication via the keyboard/display (local display showing any information except for the initial DTP GENERAL ELECTRIC screen), or via communications gate 1 (PORT 1, PORT2 connectors), and remote communication refers to connection via gate 2 (PORT 3 rear connector), or when in the initial DTP GENERAL ELECTRIC screen, PORT1 is not connected.

Local and remote communications can exist at the same time, although there is only one possibility for changing settings and carrying out operations, since this can only be done with the communication which has priority (local communication) while the other is limited only to accessing information. When the local communication is interrupted, either by the disconnection of PORT 1 connector or because the MMI is on the initial screen (a situation which can be caused intentionally, or automatically if no key has been pressed for 15 minutes), the remote communication recovers the ability to modify settings and carry out operations.

The unit can implement a different protocol, apart from MLINK. In this case, the relay communicates using MLINK by PORT1 (connectors 1 and 2), and the other protocol uses PORT2.

5. SETTINGS

The following tables describe the settings incorporated in the DTP unit, together with their ranges, units and corresponding steps. The column marked DEFAULT indicates that this is the setting on the relay when it leaves the factory.

It is possible to see the settings or to modify them manually, using the keyboard and display, or using a computer connected to any of the serial ports. To modify the settings by means of the keyboard, please refer to section 11 "KEYBOARD AND DISPLAY". To modify the settings by computer, please follow these instructions:

- Make sure that the available connection wire coincides with the diagram in figure 3, depending on whether the serial port of your computer is DB9 or DB25.
- Connect the cable between the relay (or modem) and the serial port of your computer.
- Run the GE-LOCAL software. For more details on the installation and use of the GE-LOCAL software please refer to the GE-LOCAL instruction book.
- Make sure that the program configuration communication parameters coincide with those of the DTP unit. More specifically, the parameters for the communication configuration of the local MMI are the following:
    - UNIT NUMBER
    - PASSWORD
    - COMMUNICATION BAUD RATE (for the relay, depending on which port is being used (local or remote))
    - STOP BIT (for the relay, depending on which port is being used (local or remote))

To modify or view the unit's configuration parameters go to the configuration menu, and follow the instructions given in section 11 "KEYBOARD AND DISPLAY".

When connecting to the unit, check that the relay number and password coincide with those which appear on the unit's configuration menu.

The DTP system has 3 settings tables stored in non-volatile memory, and these can be selected by settings or configurable inputs. The following categories contain the settings common to the 3 tables:

GENERAL

ACTIVE TABLE

PROTECTION SETTINGS

OSCILLOGRAPHY MASKS

PERMISSIONS FOR EACH FUNCTION

The differential unit settings can be selected for each of the three tables independently.

It should be noted that in order to simplify the setting of the unit, and for safety reasons, all settings related to the configuration of the unit (configurable inputs and outputs, alarms configuration and LEDs) have been removed from the keyboard/display and communications software. To carry out these configurations the GE-INTRO configuration software must be run.

The following settings are common to all tables:

Table III. SETTINGS COMMON TO ALL TABLES

Setting	Limit	Default	Step
General Settings			
Relay Status	In/out of service	In service	N/A
Identification	20 ASCII characters	No Id.	N/A
Frequency	50 / 60 Hz	50 Hz	N/A
1st winding CT ratio	1 - 4000	1	1
2nd winding CT ratio	1 - 4000	1	1
3rd winding CT ratio	1 - 4000	1	1
4th winding CT ratio	1 - 4000	1	1
Compensation	External/Internal	External	N/A
Active Table Settings			
Active Table	1 - 3	1	1
Protection Settings			
1st winding tap	0.5 - 20 x In	1	0.01
2nd winding tap	0.5 - 20 x In	1	0.01
3rd winding tap	0.5 - 20 x In	1	0.01
4th winding tap	0.5 - 20 x In	1	0.01
1st winding configuration	Y,D,ZZ	Y	N/A
2nd winding configuration	Y, D, ZZ	Y	N/A
2nd winding time group	0 - 11	0	1
3rd winding configuration	Y, D, ZZ	Y	N/A
3rd winding time group	0 - 11	0	1
4th winding configuration	Y, D, ZZ	Y	N/A
4th winding time group	0 - 11	0	1
1st winding CT configuration	Y0, Y6, D1, D5, D7,D11	Y0	N/A
2nd winding CT configuration	Y0, Y6, D1, D5, D7,D11	Y0	N/A
3rd winding CT configuration	Y0, Y6, D1, D5, D7,D11	Y0	N/A
4th winding CT configuration	Y0, Y6, D1, D5, D7,D11	Y0	N/A
Oscillography Mask			
Number of pre-fault cycles	2- 10	4	1
Trip 87B A	Enabled/ Disabled	Enabled	N/A
Trip 87B B	Enabled/ Disabled	Enabled	N/A
Trip 87B C	Enabled/ Disabled	Enabled	N/A
Trip 87 A	Enabled/ Disabled	Enabled	N/A
Trip 87 B	Enabled/ Disabled	Enabled	N/A
Trip 87 C	Enabled/ Disabled	Enabled	N/A

Setting	Limit	Default	Step
Buchholz Trip	Enabled/ Disabled	Enabled	N/A
Temperature Trip	Enabled/ Disabled	Enabled	N/A
Input Trigger	Enabled/ Disabled	Enabled	N/A
CommunicationTrigger	Enabled/ Disabled	Enabled	N/A
Function Permission Group			
87B Function permission	Allowed/Not allowed	Not allowed	N/A
87 Function permission	Allowed/Not allowed	Not allowed	N/A
2nd harmonic restraint	Allowed/Not allowed	Not allowed	N/A
5th harmonic restraint	Allowed/Not allowed	Not allowed	N/A
Trip 87B	Enabled/ Disabled	Enabled	N/A
Trip 87	Enabled/ Disabled	Enabled	N/A

The independent settings for each table are as follows:

Table IV. Independent Settings for Each Table

Setting	Limit	Default	Step
Differential Function Settings			
Sensitivity	0.2 - 0.4 x Itap	0.3	0.01
K1-K2 Inflexion	0 - 10 x Itap	5.0	0.01
K1 percentage restraint	15 - 100 %	30	0.01%
K2 percentage restraint	15 - 100 %	30	0.01%
2nd harmonic restraint	12 - 100 %	100	0.01%
5th harmonic restraint	12 - 100 %	100	0.01%
87B tap	4 - 12 x Itap	8	0.01 A

Comments about the Settings:

The "ACTIVE TABLE" setting allows you to select which of the three settings tables on the DTP unit is active at a given moment. This selection can also be carried out by digital inputs configured for this purpose. If there is a disagreement between this setting and the input selection, the last one has priority over the table selection via setting.

The "PREFAULT CYCLES" setting is the number of cycles before the oscillography trigger to be registered by the system (between 2 and 10 cycles). In any case the total number of cycles for an oscillography register is preset at 66 cycles, regardless of the setting for the number of pre-fault cycles.

The K1-K2 INFLEXION is the limit between two different zones of the percentage restraint. The set value is the through current value, for which the slope changes.

The settings related to the third and fourth winding, will only be present in those units with 3 or 4 windings.

6. UNIT CONFIGURATION

The DTP protection system has user configurable inputs, outputs, and LED indicators. These configurations are performed using the GE_INTRO software.

6.1 INPUTS CONFIGURATION

One of the following meanings can be assigned to any of the 7 inputs:

- Unused input
- External Trigger (P)
- Table 0 Selection (L)
- Table 1 Selection (L)
- Buchholz Alarm (L)
- Buchholz Trip (L)
- Overtemperature Alarm (L)
- Overtemperature Trip (L
- Trip block (L) (Affecting only functions 87 and 87B)

Besides these possibilities, the configurable inputs can also be used for implementing different schemes performing logic ANDs with the inputs, and assigning them to the outputs. For this purpose, the inputs must be configured as “Unused input”.

The performance of each input is detailed in the following paragraphs:

- **External Trigger (P)**: This input is activated by pulse, and the relay captures the oscillography on activation. It also generates an event.
- **Table 0 Selection (L**): This input is activated by level, and it is used for changing the active settings table. Please refer to section 4.4 for further details.
- **Table 1 Selection (L)**: Same as the previous one.
- **Buchholz Alarm (L):** This input is activated by level, and it confirms the existence of the Buchholz alarm.
- **Buchholz Trip (L):** This input is activated by level, and it activates the tripping relays.
- **Overtemperature alarm (L):** This input is activated by level, and it confirms the existence of the overtemperature alarm.
- **Overtemperature Trip (L):** This input is activated by level, and it activates the tripping relays.
- **Trip Block (L):** This input is activated by level, and it blocks the tripping functions. If any function has tripped before the input activation, the trip will last until the reason that caused it disappears.

6.2 OUTPUTS CONFIGURATION

The DTP system has 8 user configurable outputs, and 5 non-programmable outputs. The configurable outputs are identified in the external connections diagram (figure 1) as SP1, SP2, etc. Any internal protection state shown in TABLE II can be assigned to a programmable output, as well as the activation or deactivation of an internal state. Also, AND and OR logics can be performed with the outputs.

For example, if we want to configure protection output 4 to the logic AND of input 3 and the 87B A TRIP, we will follow these steps:

- In the output ANDs screen, we configure AND1 to the INPUT3 activation.
- In this same screen, we configure AND2 to 87B A TRIP.
- In this same screen, we configure AND3 as the logic AND for AND1 and AND2.
- In the output configuration screen, we configure SP4 output to the activation of AND3.

6.3 LEDS CONFIGURATION

The DTP unit has a total of 16 configurable LEDs. These can be associated to the internal protection and communication states. A LED can be configured to blink, or to remain lit up when activated. Similarly, the user can select whether he/she wants the LED to be memorized in the absence of the activation condition.

For configuring a LED, it is first necessary to associate an internal state to a protection or communication event. Once this step is completed, the LED is associated to an event.

For example, if we want LED12 to light up when the A differential function trips, we will follow these steps:

- In the PROTECTION EVENT ASSIGNATION menu, we associate “Protection Event 1” to “Differential A Trip”.
- In the LED assignation menu, we will associate LED12 to “Protection Event 1”.

7. TECHNICAL CHARACTERISTICS

7.1 MODEL LIST

DTP	-	-	-	-	-	0	1	0	-	0	0	B	DESCRIPTION
	1												2 Windings
	2												3 Windings
	3												4 Windings
													Comm. Protocols
		0											P1, P2, P3: Mlink
		2											P1, P2: Mlink ; P3: ModBus RTU
			1										In = 1A for all windings
			5										In = 5A for all windings
			A										In = 5A for winding 1 and In=1A for the rest of windings.
			B										In = 1A for winding 1 and In=5A for the rest of windings.
			C										In = 1A for windings 1 and 2, and In=5A for windings 3 and 4.
													Communications
				0									3x RS-232
				1									2x RS-232 + Plastic F.O.
				2									2x RS-232 + Glass F.O.
				3									2x RS-232 + RS-485
				4									P2, P3: Plastic F.O. (a single port with two connectors)
				5									P2, P3: Plastic F.O. (two ports with two connectors). P2 (integrable), P3 (commuted)
													MMI Language
					M								Spanish
					D								English
									F				Vaux=24 – 48 Vdc
									G				Vaux=48 - 125Vdc
									H				Vaux=110 - 250Vdc
										-	**-**		Special Model
												B	Revision Level

7.2 TECHNICAL CHARACTERISTICS

7.2.1 MECHANICAL

- Metal casing, 19 inches rack case 4 units high
- IP52 Grade Protection (as per IEC 529)
- Local MMI with LCD screen consisting of 2 rows of 16 characters and 20 key keyboard
- Rear connection by means of 8 strips of 12 terminals each
- Dimensions: 437 x 200 x 176 mm (19" rack 4 units high)
- Weight: net 12 kg. Shipping 13 kg.

7.2.2 ELECTRICAL CHARACTERISTICS

- Frequency: *50 or 60 Hz*
- Auxiliary Voltage: *48Vdc or 110/250 Vdc (depending on the model) ± 20%*
- Digital Input Voltage: *Same as auxiliary voltage*
- Thermal Capacity

  Current circuits:

  - Continuous: *4 x In*
  - During 3 sec.: *50 x In*
  - During 1 sec.: *100 x In*
- Temperature:
  - Operating: *-20°C to +55°C*
  - Storage: *-40°C to +85°C*
- Humidity: *Up to 95% without condensation*
- Tripping contacts:
  - Rated voltage/maximum opening voltage: *250/440 VAC*
  - Rated current / closing current. *16/25A*
  - Operating Power *4000 VA*
  - Mechanical Life *30 x 10^6 ops*
- Burdens and Consumption:
  - Current circuits: *0.03 Ω, In = 5 A*
  - Continuous: *12 W*
  - Per active input: *8 mA (1 W Vaux = 125 Vcc)*

7.2.3 COMMUNICATIONS

- RS232 using female DB9 connector (2/3 connectors depending on the model).
- RS485 (depending on the model)
- Mode: Half duplex.
- 1 mm plastic Fiber Optic (depending on the model):

Typical power output:	-8 dBm
Receiver sensitivity:	-39 dBm
Numeric aperture N.A.	0.5
Wave length:	660 nm (visible red)
HFBR-4516 type connector	

- Glass Fiber Optic 62.5 /125 (depending on the model):

Typical power output:	-17.5 dBm
Receiver sensitivity:	-25.4 dBm
Numeric aperture N.A.	0.2
Wave length:	820 nm (near infrared)
SMA Type connector	

7.2.4 STANDARDS

The DTP equipment complies with the following standards, which include the GE insulation and electromagnetic compatibility standard and the standards required by Community Directive 89/336 for the EC market, in line with European standards. It also complies with the European directive requirements for low voltage, and the environmental and operating requirements established in ANSI standards C37.90, IEC 255-5, IEC 255-6 and IEC 68.

Test	Standard	Class
• Insulation Test Voltage	IEC 255-5	600V, 2kV 50/60 Hz 1 min
• Impulse Voltage Withstand	IEC 255-5	5 kV, 0.5 J
• 1 MHz interference	IEC 255-22-1	III
• Electrostatic discharge	IEC 255-22-2 EN 61000-4-2	IV 8 kV
• Immunity to radio interference	IEC 255-22-3	III
• Electromagnetic fields radiated with amplitude modulation.	ENV 50140	10 V/m
• Electromagnetic fields radiated with amplitude modulation. Common mode	ENV 50141	10 V/m
• Electromagnetic fields radiated with frequency modulation	ENV 50204	10 V/m
• Fast transients	IEC 255-22-4 EN 61000-4-4	IV
• Magnetic fields at industrial frequency	EN 61000-4-8	30 Av/m
• RF emission	EN 55011	B

8. HARDWARE DESCRIPTION

CAUTION

The DTP contains electronic components that could be damaged by electrostatic discharge if those currents flow through certain terminals of the components. The main source of electrostatic discharge currents is the human body, especially in conditions of low humidity, carpeted floors and isolating shoes. Where these conditions exist, care should be exercised when removing and handling the modules. The persons handling the modules should make sure that their body charge has been discharged, by touching some surface at ground potential before touching any of the components on the modules.

8.1 PHYSICAL DESCRIPTION

8.1.1 CASE

The DTP's case is a standard 19" rack 4 units high, manufactured in stainless steel and painted with grey epoxy resin. It is composed of a backbone structure, that includes the strips where all the modules and boards are connected, plus a rear plate with all the female connectors. All the boxes have a surge ground connection terminal, essential not only in terms of safety, but also on behaviour against electromagnetic disturbances.

All modules are drawout type, enabling easy maintenance and repair of the unit.

The DTP also incorporates a plastic antitampering front cover. This cover keeps the relay sealed and provides a high protection against dust and water (IP52 index according to IEC 529). The use of a push-button allows access to the main functions without the need of removing the cover.

The front view of a typical DTP-B equipment is shown on figure 5.

8.1.2 ELECTRICAL CONNECTIONS

All the DTP electrical connections (voltage inputs and digital I/Os) are done through drawout terminal boards of 12 terminal blocks each, located on the rear of the device.

Besides those terminal blocks, the DTP units include two communication ports with three connectors; one front DB-9 port for local connection, and two more located on the rear, to be used for remote connection to a PC (point-to-point mode), or for network connection with other DDS System compatible units connected by means of a Level 2 Substation Concentrator PC. The front connector, and one of the rear connectors share the same DB-9 port. The second communications port can be selected among the following:

- RS-232
- Glass F.O.
- Plastic F.O.
- RS-485

The rear plate also includes the terminal blocks for time synchronization through a demodulated IRIG-B input.

8.1.3 INTERNAL CONSTRUCTION

Internally, the DTP units consist of the following 4 units high drawout modules:

- 1 power supply module.
- 1 or 2 magnetic modules, depending on the number of windings (analog inputs).
- 1 protection CPU module.
- 1 communications CPU module
- 1 digital inputs & outputs mixed module.
- 1 Sample & Hold Module.

Each of these modules has a DIN type front connector for the connection to the internal communication bus. Also, in the case of having connections to the outside (inputs, outputs, and power supply modules), the male part of the terminal block is incorporated. The female part of the connector is located on the rear plate of the case. All these boards are inserted in the box, perpendicularly to the rear plate.

Besides all these modules, there are some other boards mounted in parallel to the front of the box. These boards are:

Internal Bus board.

This is a PCB that performs the connection between the digital inputs and the power supply through its front DIN connectors.

Front Display Board

It is a PCB that includes the LCD display for the protection management, and the configurable LED indicators. Additionally, the board includes the front communications connector, and the bicolour LED indicator of the unit status.

The front module is mechanically and solidly connected to the keypad board; the electrical connection is done through a flexible flat cable of 12 pins.

The subgroup formed by these two front boards is connected to the rest of the unit through another flexible flat cable of 40 pins, connected to the front of the communications CPU

Front Keypad Board

It is a PCB that is solidly joined to the front board of the display, as mentioned before, and supports the keypad for the protection operation (20-key alpha-numerical keypad controlling the alphanumerical display). The board also includes a transparent window for the display and for the control board, where the unit identification (model number and serial number) and its more relevant technical characteristics are included.

The group formed by both front boards is mechanically and electrically joined to the box by means of 4 screws placed at the bottom and top of the front. In order to access the internal electronic modules of the relay, the following steps must be followed (once the relay has been disconnected).

1. Remove the plastic cover.
2. Slack the fixed front screws until they are loose and fixed only by their fastening sleeve.
3. Let the front part fall steadily until the flat cable, that is connected to the communications port, is accessible, and disconnect it from this board.
4. Remove the front module.

5. Take out the internal bus board that holds the different modules.

Following this process, every relay module can be accessed for taking it out, maintenance or replacements. In order to assemble the relay again, the opposite procedure should be followed, that is:

1. Make sure that every vertical drawout module has been correctly inserted.
2. Place the internal bus board, which holds the different modules, by pressing from left to right every connector in order to ensure their right insertion.
3. Connect the flat cable that joins the front module with the communications port.
4. Place the front module in its position and screw it.
5. Cover again the relay with its protective cover.

8.1.4 IDENTIFICATION

The identification label of the unit is placed on the right of the alpha-numeric keypad. This label includes the model number, serial number and the most relevant rated values (including rated current, and DC power supply rated voltage).

Terminal blocks placed on the rear cover are identified by black colour serigraphy on the cover. Each of the terminal blocks is labelled by a letter placed on the top border of the cover, close to the connector. This connector identification is assigned to the different connectors, beginning by A, which corresponds to the connector placed on the right end (looking at the relay from the back).

In the terminal blocks, each of the 12 terminals of each block is labelled from the top to the bottom by a number from 1 to 12, serigraphied on the cover close to each connector, where the connection cables are plugged. The connector terminals for synchronization are labelled with IRIG-B, and their polarity is labelled with “+” and “-“.

For relays with fiber optics communications (plastic or glass), the connector’s transmission and reception terminals are labelled TX and RX respectively.

8.1.5 MAGNETIC MODULE

The magnetic module takes the current inputs from the conventional substation transformers, and performs the following functions:

- It provides galvanic isolation to the external signals by means of internal transformers of the unit.
- It gives the external inputs the adequate voltage levels for the internal circuitry.

Passive filters are another element included in this module. As the magnetic module is connected to external equipment signals, it is liable to suffer electromagnetic disturbance. In order to avoid this effect, anti-noise filters have been included in the primary side of the transformer (capacitors connected to chassis), as well as in the secondary (ferrites), so as to prevent disturbance from entering the equipment. These protection elements act as well as a barrier, preventing possible disturbances generated in the protection equipment from coming out of it and affecting the external equipment (emisivity and susceptibility).

The last element included in the magnetic module consists of load resistors that convert the current signals in voltage signals, in case of current inputs; and the voltage signals in resistive attenuates.

8.1.6 PROTECTION CPU PROCESSING BOARD

This module is the main part of the equipment, as regards protection functions. Its main functions are:

- Sampling of analog inputs coming from the magnetic module.
- Protection algorithms evaluation.
- Protection logic and auxiliary functions.
- Monitoring functions, events register, oscillography register, etc.
- Self-check of the unit.
- Protection data communication to the communications CPU.

The core of the CPU module is a 16-bit micro-processor together with its auxiliary associated circuitry.

8.1.7 COMMUNICATIONS CPU MODULE

The core of the communications CPU is very similar to the Protection CPU's, and it also consists of a 16-bit microprocessor, together with the associated circuitry.

The main function performed by the Communications CPU module is maintaining and controlling the communications in the following channels:

- Internal communication with the Protection CPU module.
- Local mode communication with a PC by the front communications port.
- Remote mode communication by the rear communication port.
- Man-machine interface, by means of keypads and displays (alphanumerical).

8.1.8 INPUTS/OUTPUTS MODULE.

DTP units have been designed to allow the maximum capacity for inputs and outputs in each board, maintaining at the same time complete reliability against electromagnetic disturbance.

Every board input has a resistive attenuate, which adequates the external voltage battery levels (48 V, 125 V,...) to the needs of the optocoupler that provides each input with galvanic isolation. As the majority of these inputs come from elements connected to the substation equipment, together with the resistive attenuate one passive filter is provided, in order to obtain a better behaviour against electromagnetic disturbance.

Each of the 8 outputs are heavy duty relays, with a continuous capacity of 16 Amperes, and a breaking capacity of 4000 VA.

Each of these relays has an only contact, which can be configured separately as normally open or normally closed (N.O. + N.C.) by means of jumpers (fixed by welding) placed in the board.

In every configuration, these are non potential contacts, without common elements, and all of them have varistors between their terminals in order to protect them against overvoltages generated by the coils to which they are connected. This provides a high immunity against electrical interferences.

8.1.9 POWER SUPPLY

The Power Supply module includes the following functions:

1. Generation, from the external battery power supply, of the necessary voltages for electronic circuitry. In this case, 8 V (later regulated to 5 V) for the logic, and 24 V for the trips.
2. Four tripping relays, with the same characteristics as those included in the outputs board, assigned to tripping functions in the DTP unit.
3. One equipment alarm auxiliary relay.

With reference to the Power Supply module, it is important to point out:

- One passive filter is included in the power supply input, in order to avoid any possible electromagnetic disturbance. A current limiter is also included for protecting the power supply against unintentional groundings.
- The tripping relays are stronger (in capacity and in control operations life) than the normal ones used in similar protection equipment, and the output contacts can be configured (NO or NC), providing high versatility.
- The output circuits of the power supply modules to other boards are conditioned so that they can have several power supply modules commuting the service among them in case of failure, providing greater reliability to the unit.

8.1.10 SAMPLE & HOLD MODULE

The purpose of this module is to measure all the analog inputs and maintain their values, in order for the protection module to have enough time to measure them all. This is the same as measuring all the analog inputs simultaneously, avoiding the small difference that would appear if the protection module measured the inputs one by one.

8.2 RECEPTION, HANDLING & STORAGE

DTP units are supplied to the customer in a special package, which adequately protects it during transportation, as long as this is performed in normal conditions. Immediately after receiving the relay, the customer should check whether it shows any sign of transportation damage. If it is apparent that the relay has been damaged by inappropriate handling, the carrier must be immediately informed in writing, and the damage must be reported to the manufacturer.

When unpacking the relay, normal care should be taken in order not to lose the screws, documents, and other auxiliary elements supplied in the box.

If it is not intended to install the relay immediately, it is recommended to store it in its original package, and keep it in a dry, dust free and metal particles free place.

8.3 INSTALLATION

DTP relays must be mounted on a vertical surface that allows access to the front and rear relay plates. It is not necessary to be able to access the side surfaces of the relay. Dimensions and panel drilling schemes are shown in figures 2 and 4.

9. ACCEPTANCE TESTS

In this section, the necessary tests to check proper operation of the relay are described. The relay must have the factory configuration, so that the configurable inputs and outputs coincide with those indicated in the following tests.

9.1 CONNECTIONS

Connect the relay as shown in the external connections diagram (figure 1).

The power supply must be connected to Q11 (Positive) and P11 (Negative).

Due to safety reasons, the external protection ground terminal should be securely grounded.

9.2 VISUAL INSPECTION

Check that the relay has not suffered any kind of damage due to transportation and handling.

Check that all screws are sufficiently tight and that the terminal strips have not been damaged in any way.

Check that the information on the nameplate coincides with that of the ordered model.

9.3 INSULATION TESTS

Progressively apply 2000 rms volts across all the terminals of a group short-circuited between them and ground (or the case), during one second.

Progressively apply 2000 rms volts between groups, during one second.

The independent insulation groups are as follows:

GROUP	TERMINALS	DEFINITION
G1	A1..6, B1..6, E1..6, F1..6	Currents
G2	P5..9, Q5..9	Trips
G3	P11, Q11	Power Supply
G4	J1.. 4, K1..4	Inputs
G5	J5..12, K5..12	Outputs

9.4 POWER SUPPLY

For safety reasons, P12 terminal must be grounded during functional tests.

The relay is connected to a power supply, at minimum and maximum rated voltage. For each of these voltages, check that the ALARM relay is open when the unit is powered, and closed when it is not powered.

Generate an 87B trip by the three phases, and activate the Buchholz Alarm, and Overtemperature Alarm inputs.

When the relay is tripped, measure its DC power consumption, and check that it communicates correctly.

The typical test voltages and burdens are as follows:

Model A		Model H	
Vdc Voltage	Typical consumption (mA)	Vdc Voltage	Typical consumption (mA)
38	550	80	550
48	227	250	225
58	205	300	205

9.5 MEASUREMENT CHECK

Check that the unit measures correctly applying current by one of the phases to the primary and secondary windings.

Please take into account that the differential and through currents are given in times the tap, and the tap is obtained from:

Tap = Winding tap setting x In.

For example, if all the winding taps are set to 0.5, and the rated current is 5Amp, the tap is 0.5x5= 2.5 Amp. If then we apply 2.5 Amp, only to the first winding, the relay must measure a differential current of 1.00 and a through current of 0.00. If the current is applied also to the second winding, it must give the following values:

If the unit sees both currents in phase Id = 2.00 and It = 0.00

If the unit sees both currents in counterphase Id = 0.00 and It = 1.00

Repeat the test with different values, and by the three phases, and check that the obtained values do not differ from the expected in more than a 5%.

9.6 DIGITAL INPUTS CHECKING

For this test, the minimum and maximum admissible voltages will be applied to the inputs with a 20% rated voltage tolerance.

Apply voltage to an input and check that the unit recognizes its activation by means of GE-LOCAL software.

Repeat the test for the rest of inputs.

9.7 OUTPUTS CHECKING

9.7.1 TRIP OUTPUTS CHECKING.

1. Activate EP3 inputs, terminals J2-K2.
2. Verify that the tripping contacts (TRIP1, TRIP2, TRIP3, TRIP4) close when the input is applied, and open when this condition disappears.

9.7.2 ALARM OUTPUTS CHECKING.

1. Without powering the unit, check that the alarm output is closed.
2. Apply power supply to the unit, and check that there is no alarm condition such as, protection out of service, or disabled trips. In this case, check that the alarm contact is open.

9.7.3 CONFIGURABLE OUTPUTS CHECKING.

Make one of the configurable contacts close in one of the following ways:

1. Activate an 87 trip in phase A and check that J5-K5 closes.
2. Activate an 87 trip in phase B and check that J6-K6 closes.
3. Activate an 87 trip in phase C and check that J7-K7 closes.
4. Activate an 87B trip in phase A and check that J8-K8 closes.
5. Activate an 87B trip in phase B and check that J9-K9 closes.
6. Activate an 87B trip in phase C and check that J10-K10 closes.
7. Activate PI2 input, terminals K1-K4 and check that J11-K11 closes.
8. Activate PI4 input, terminals K2-K4 and check that J12-K12 closes.
9. Check that all the configurable relays close with the closing condition, and open when it disappears.

9.8 COMMUNICATION PORTS CHECKING

This test is performed to check that the 3 communications ports operate correctly.

To do this, it is necessary to connect the relay to a PC using the connectors shown in figure 3.

Set the following communications parameters for the computer and the relay:

Relay number = 1

Network baud rate = 9600

Local baud rate = 9600

Remote stop bits = 1

Local stop bits = 1

Using the GE-LOCAL communications software, perform the connection and check that the relay communicates by both ports. Repeat the test for different baud rates.

9.9 KEYPAD, DISPLAY, AND LEDS CHECKING.

Press the Target Reset button and verify that all the LEDs light up.

Press the appropriate keys and verify that the following messages are displayed:

KEY	MESSAGE
< SET >	VIEW PROTECTION SETTINGS
< CLR >	DTP GENERAL ELECTRIC
< INF >	STATUS
< ENT >	MODEL
< ↑>	DATABASE
< ↓>	MODEL
< CLR >	STATUS
< CLR >	DTP GENERAL ELECTRIC
< ACT >	SET DATE/TIME
< CLR >	DTP GENERAL ELECTRIC
<7169>	NET BAUD RATE
< ↑>	NET STOP BITS

Now, dial all the numbers one by one, deleting them with the CLR key, and check that the pressed numbers are displayed.

9.10 OPERATIONS

9.10.1 TIME SETTING.

Set the date and time, and check that the setting is performed successfully.

9.10.2 COMMUNICATIONS TRIGGER.

Apply a known current by any of the phases, and operate the communications trigger. Verify, retrieving the header of the last oscillography record by means of the GE-LOCAL software, that the retrieved time coincides with the correct time.

9.11 PERCENTAGE RESTRAINT CHECKING

- Disable the harmonic restraints, and enable the differential function.
- Set sensitivity to 0.3, and percentage restraints to 50%
- Apply current to the primary and secondary, so that we have a differential current of 0.00, and a through current of 2.
- Increase the current in the primary, and check that it trips when the differential current is equal or higher than 0.3 + 2.00 x 0.5 = 1.30

Check that it trips with an error margin of less than 5% for different through currents, and different sensitivity and percentage restraint settings.

9.12 HARMONIC RESTRAINT CHECKING

- Enable the harmonic restraints, and the differential function.
- Set sensitivity to 0.3, percentage restraints to 50%, and harmonic restraints to 20%.
- Apply current to the primary and secondary, so that we have a differential current of 0.00, and a through current of 2.
- Apply to the primary a second harmonic current of 0.5 Amps, besides the current it already had.
- Increase the current in the primary, and check that it trips when the differential current is equal or higher than 0.3 + 2.00 x 0.5 + 0.5 / 0.2 = 3.8

Check that it trips with an error margin of less than 5% for different through currents, and different sensitivity and percentage restraint settings.

9.13 INSTANTANEOUS FUNCTION CHECKING

- Disable the harmonic restraints, and the differential function, and enable the instantaneous function.
- Set the instantaneous function to 4 times the tap.
- Apply current to the primary, and check that it trips when the differential current reaches the set value.

Check that it trips with an error margin of less than 5% for different differential currents, and different instantaneous function settings.

10. INSTALLATION AND MAINTENANCE

10.1 INSTALLATION

The relay should be installed in a clean, dry and dust-free place, with no vibrations. It should also be well lit to facilitate inspection and testing.

The relay should be mounted on a vertical surface. Figure 2 shows the diagram for panel drilling for panel mounting.

Given that the design of the SMOR unit is based on high performance digital technology it is not necessary to recalibrate the relay. However if the tests show that it is necessary to readjust the relay, it is recommended that the unit should be returned to the manufacturer to have this done.

10.2 CONNECTION TO GROUND AND SUPPRESSION OF DISTURBANCES

Terminal P12 (see figure 6) should be connected to ground so that the disturbance suppression circuits in the system work correctly. This connection should be as short as possible (preferably 25 cm or less) to guarantee maximum protection. In this way the capacitors which are internally connected between the inputs and ground divert high frequency disturbances directly to ground without passing through the electronic circuits, with the result that the circuits are perfectly protected.

In addition this connection also guarantees the physical safety of the personnel who have to touch the relay, since the whole casing is connected to ground.

10.3 MAINTENANCE

Given the important role that the protection relays play in the operation of any installation, a periodic program of tests is highly recommended. The unit incorporates built-in diagnostic functions which permit immediate identification with only the aid of the keyboard and display, the detection of some of the most likely circuit failures. Testing the unit is recommended at intervals of 2 years or more. Although the built-in diagnosis does not reduce the average time between failures, it does increase the availability of the protection because it allows a drastic reduction in the average interruption time involved in detecting and repairing the fault.

The set of tests which can be carried out to test that all the features of the DTP unit function properly is described in detail in the chapter entitled ACCEPTANCE TESTS.

Since most of the protection and communications functions are integrated in two separate programs, it is unlikely that faults will occur due to problems of wear or ageing which are typical in electromechanical, analog or hybrid protection systems. Moreover, a failure in the communications processor does not affect the protection functions, which are implemented by a dedicated processor.

11. KEYBOARD AND DISPLAY

The DTP has a 20 key keyboard and a liquid crystal DISPLAY with 32 characters, divided into two rows of 16 each. The following diagram shows the appearance of the DTP keyboard:

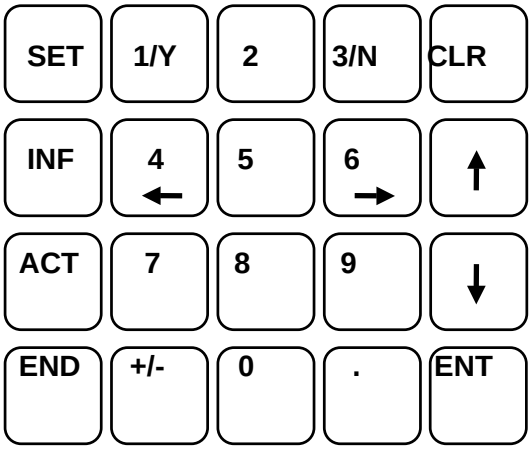

The keyboard program uses menus to access the different relay functions. These functions are divided into five large groups, each of which is accessed using a different key. These groups are the following:

Information: Provides data about the status of the relay. This menu is accessed using the **INF** key.

Operations: Allows to synchronize the date and time on the relay, and to perform a communications trigger. This menu is accessed by pressing the **ACT** key.

Settings: Permits viewing and changing all the relay settings. This menu is accessed by pressing the **SET** key.

Configuration menu: Allows access to the system configuration and the modification of passwords, access, communication baud rates, etc. This menu is accessed by keying in the code "**7169**" In order to access this mode the relay should be on the main screen.

Single key menu: By pressing the **ENT** key the DTP can be operated in a simplified mode. It is not necessary to remove the methacrylate cover on the front of the relay to access this mode.

When at rest the DTP shows the following message on the DISPLAY:

DTP
GENERAL ELECTRIC

This is the point from which the five groups mentioned above can be selected. In order to select a different group you must return to this screen and press the key which corresponds to that group.

Once inside a group it is not possible to select a different one. Movement inside a group is carried out using the following keys: ENT, CLR, and the up, down, left, right arrows. Their function is as follows:

ENT: Accepts the option that is shown on the screen at that moment. The equivalent of going down one level in the menu tree.

CLR: Abandons the option that is shown on the screen at that moment. The equivalent of going up one level in the menu tree.

UP / DOWN ARROW: Change options. The equivalent of a horizontal movement within a menu. When the required option appears on the screen it can be selected with the ENT key.

LEFT / RIGHT ARROWS: Show the different possibilities of a given setting. It is not used for all settings. When the required option appears on the screen it can be selected with the ENT key.

11.1 MENU TREE

The DTP has different menus, divided into levels. Level 0 is the initial screen. Level 1 of the menus is accessed by pressing the corresponding group key (SET, INF, etc). Moving within a given level is done by using the UP and DOWN arrows. It is possible to go down to levels 2 and 3 by pressing the ENT key. Press CLR to go up a level within the menu tree. Level 1 for each of the five groups is shown in the following table:

Group	Level 1	Description
SET	• VIEW SETTINGS	• View settings
	• MODIFY PROTECTION SETTINGS	• Change settings
INF	• STATUS	• Shows the status of the relay
ACT	• SET DATE/TIME	• Change date and time on the relay
	• COMM. TRIGGER	• Trigger oscillography by communication
ENT	• DIFFERENTIAL Ia	• Shows the differential current in phase A, in times Itap
	• DIFFERENTIAL Ib	• Shows the differential current in phase B, in times Itap
	• DIFFERENTIAL Ic	• Shows the differential current in phase C, in times Itap
	• DIF Ia 2ND HARM	• Shows the 2ND harmonic current in phase A, in times Itap
	• DIF Ib 2ND HARM	• Shows the 2ND harmonic current in phase B, in times Itap
	• DIF Ic 2ND HARM	• Shows the 2ND harmonic current in phase C, in times Itap
	• DIF Ia 5TH HARM	• Shows the 5th harmonic current in phase A, in times Itap
	• DIF Ib 5THHARM	• Shows the 5th harmonic current in phase B, in times Itap
	• DIF Ic 5TH HARM	• Shows the 5th harmonic current in phase C, in times Itap
	• THROUGH Ia	• Shows the through current in phase A, in times the tap
	• THROUGH Ib	• Shows the through current in phase B, in times the tap
	• THROUGH Ic	• Shows the through current in phase C, in times the tap
	• PROTEC. STATUS	• Shows the status of the protection system

Group	Level 1	Description
		(in/out of service)
	• ACTIVE TABLE	• Shows the active settings table #
	• DATE & TIME	• Shows date and time of the unit
7169	• NET. BAUDRATE	• Communication baud rate on remote network
	• NET. STOP BITS	• Stop bits, remote network communications
	• LOC. BAUDRATE	• Baud rate of local communication
	• LOC. STOP BITS	• Stop bits, local communication
	• LOCAL SETTINGS	• Local settings changes allowed / not allowed
	• REM. SETTINGS	• Remote settings changes allowed / not allowed
	• LOC. OPERATION	• Local operations allowed / not allowed
	• REM. OPERATIONS	• Remote operations allowed / not allowed
	• UNIT NUMBER	• Shows the unit number of the relay
	• PASSWORD	• Allows modification of relay password
	• t TIMEOUT	• External synchronizing maximum time for avoiding the TIMEOUT event.

11.2 SETTINGS GROUP

This group allows the visualization and modification of the DTP settings. It is accessed by pressing the SET key when the DTP is in the initial screen. When the SET key is pressed the following message appears on the screen:

VIEW PROTECTION SETTINGS

When the UP/DOWN arrows are pressed the message changes to:

MODIFY PROTECTION SETTINGS

The menu tree for the DTP settings is shown in the following table. Note that to go down a level in the tree you have to press the ENT key and that to go up you have to press the CLR key.

Level 1	Level 2	Level 3	Presentation	Valid Range
VIEW PROTECTION SETTINGS	GENERAL SETTINGS	RELAY STATUS	It sets the relay in / out of service	In / Out of service
MODIFY PROTECTION SETTINGS		IDENTIFICAT.	20 character alphanumeric string	
		FREQUENCY	Rated frequency of the relay	50/60 Hz
		1st WDG CT RATIO	1st winding CT ratio	1 - 4000 in steps of 1
		2nd WDG CT RATIO	2nd winding CT ratio	1 - 4000 in steps of 1
		3rd WDG CT RATIO	3rd winding CT ratio	1 - 4000 in steps of 1
		4th WDG CT RATIO	4th winding CT ratio	1 - 4000 in steps of 1
		COMPENSATION	Type of compensation (External or internal)	
	ACTIVE TABLE SET	ACTIVE TABLE	It allows changing the active table	1-3
	PROTECTION SETTINGS	1st WINDING TAP	Change from winding current to CT current	.5 to 20 in steps of 0.01 x In
		2nd WINDING TAP	Change from winding current to CT current	.5 to 20 in steps of 0.01 x In
		3rd WINDING TAP	Change from winding current to CT current	.5 to 20 in steps of 0.01 x In
		4th WINDING TAP	Change from winding current to CT current	.5 to 20 in steps of 0.01 x In

Level 1	Level 2	Level 3	Presentation	Valid Range
		1st WINDING CONN	Configuration of the first winding	Y, D, ZZ
		2nd WINDING CONN	Configuration of the second winding	Y, D, ZZ
		2nd WDG H GROUP	Time group of the second winding	0 to 11
		3rd WINDING CONN	Configuration of the third winding	Y, D, ZZ
		3rd WDG H GROUP	Time group of the third winding	0 to 11
		4th WINDING CONN	Configuration of the fourth winding	Y, D, ZZ
		4th WDG H GROUP	Time group of the fourth winding	0 to 11
VIEW PROTECTION SETTINGS		1ST WDG CT CONN	Type of CT of the first winding	y0, y6, d1, d5, d7, d11
MODIFY PROTECTION SETTINGS		2nd WDG CT CONN	Type of CT of the second winding	y0, y6, d1, d5, d7, d11
		3rd WDG CT CONN	Type of CT of the third winding	y0, y6, d1, d5, d7, d11
		4th WDG CT CONN	Type of CT of the fourth winding	y0, y6, d1, d5, d7, d11
	OSCILLOS MASK	PREFAULT CYCLES	Number of programmable prefault cycles	2 - 10
		87B TRIP PHASE A	Starts the oscilloperturbograph	Enabled / Disabled
		87B TRIP PHASE B	Starts the oscilloperturbograph	Enabled / Disabled
		87B TRIP PHASE C	Starts the oscilloperturbograph	Enabled / Disabled
		87 TRIP PHASE A	Starts the oscilloperturbograph	Enabled / Disabled
		87 TRIP PHASE B	Starts the oscilloperturbograph	Enabled / Disabled
		87 TRIP PHASE C	Starts the oscilloperturbograph	Enabled / Disabled
		BUCHHOLZ	Starts the oscilloperturbograph	Enabled / Disabled
		OVERTEMPERATURE	Starts the oscilloperturbograph	Enabled / Disabled
		EXTERNAL TRIGGER	Starts the oscilloperturbograph	Enabled / Disabled
		COMM. TRIGGER	Starts the oscilloperturbograph	Enabled / Disabled
	FUNCTION PERMIT	87B FUNCTION	Allowing or not function 87B	Allowed / Not allowed
		87 FUNCTION	Allowing or not function 87	Allowed / Not allowed
		2ND HARM. FUNCTION	Allowing or not the function	Allowed / Not allowed
		5TH HARM. FUNCTION	Allowing or not the function	Enabled / Disabled
		87B TRIP	Allowing or not the function trip	Enabled /

Level 1	Level 2	Level 3	Presentation	Valid Range
				Disabled
		87 TRIP	Allowing or not the function trip	Allowed / Not allowed
	DIFFERENT. FUNCTION	SENSITIVITY	Sensitivity of the protection	0.2 - 0.4 x It
		% RESTR CHANGE	Inflexion point between the two slopes of the protection	0 - 10 x It
		% RESTRAINT K1	Percentange restraint of the first slope	15% - 100%
		% RESTRAINT K2	Percentage restraint of the second slope	15% - 100%
		2nd HARM RESTR	Second harmonic restraint	12% - 100%
		5th HARM RESTR	Fifth harmonic restraint	12% - 100%
		87B TAP	Pickup value for the 87B unit	4 - 12 x It

These are the steps to be taken in order to change any setting:

1. Press the SET key.
2. Select the option MODIFY SETTINGS.
3. Select the required setting in the menu trees.
4. ENTER the value to be modified (or select the required value from the list of available settings using LEFT/RIGHT ARROW keys).
5. Press the ENT key. If you wish to change another setting in the same group, repeat steps 3 to 5.
6. Press the END key.

The relay will request confirmation of the change displaying the following message:

CONFIRM?
(Y/N)

7. If you want to confirm this change press the 1/Y key. (If not, press 3/N).
8. The relay will then show the following message on the screen:

SETTINGS CHANGE
EXECUTED

9. Press the CLR key repeatedly in order to return to the initial screen.

If the setting entered is outside the limits of the range allowed for that setting, the relay will not accept the change and will show the following message:

SETTING
OUT OF RANGE

Some settings do not require you to key in a numeric value, but to choose an option from a series of possibilities. In this case the options can be viewed using the LEFT/RIGHT ARROW keys.

11.3 INFORMATION GROUP

This group provides information about the internal status of the DTP. To access this group, press the INF key, and the following message will be displayed:

STATUS

Pressing the ENT key, we will enter the STATUS menu. By pressing the UPARROW and DOWN ARROW keys, we will obtain the information contained in the following table:

Status	Description
MODEL	Indicates the relay model
DATABASE	Name of the unit's database
PROT VERSION	Version of the protection program
COMM. VERSION	Version of the communications program
1ST WDG Ia MOD	Phase A current module for the 1st winding
1ST WDG Ib MOD	Phase B current module for the 1st winding
1ST WDG Ib ANG	Phase B current argument for the 1st winding
1ST WDG Ic MOD	Phase C current module for the 1st winding
1ST WDG Ic ANG	Phase C current argument for the 1st winding
2ND WDG Ia MOD	Phase A current module for the 2nd winding
2ND WDG Ia ANG	Phase A current argument for the 2nd winding
2ND WDG Ib MOD	Phase B current module for the 2nd winding
2ND WDG Ib ANG	Phase B current argument for the 2nd winding
2ND WDG Ic MOD	Phase C current module for the 2nd winding
2ND WDG Ic ANG	Phase C current argument for the 2nd winding
3RD WDG Ia MOD	Phase A current module for the 3rd winding
3RD WDG Ia ANG	Phase A current argument for the 3rd winding
3RD WDG Ib MOD	Phase B current module for the 3rd winding
3RD WDG Ib ANG	Phase B current argument for the 3rd winding
3RD WDG Ic MOD	Phase C current module for the 3rd winding
3RD WDG Ic ANG	Phase C current argument for the 3rd winding
4TH WDG Ia MOD	Phase A current module for the 4th winding
4TH WDG Ia ANG	Phase A current argument for the 4th winding
4TH WDG Ib MOD	Phase B current module for the 4th winding
4TH WDG Ib ANG	Phase B current argument for the 4th winding
4TH WDG Ic MOD	Phase C current module for the 4th winding
4TH WDG Ic ANG	Phase C current argument for the 4th winding
DIFFERENTIAL Ia	Phase A differential current
DIFFERENTIAL Ib	Phase B differential current
DIFFERENTIAL Ic	Phase C differential current
DIF Ia 2ND HARM	Phase A 2nd harmonic current
DIF Ib 2ND HARM	Phase B 2nd harmonic current
DIF Ic 2ND HARM	Phase C 2nd harmonic current

Status	Description
DIF Ia 5TH HARM	Phase A 5th harmonic current
DIF Ib 5TH HARM	Phase B 5th harmonic current
DIF Ic 5TH HARM	Phase C 5th harmonic current
THROUGH Ia	Phase A through current
THROUGH Ib	Phase B through current
THROUGH Ic	Phase C through current
87B A TRIP	Phase A backup trip
87B B TRIP	Phase B backup trip
87B C TRIP	Phase C backup trip
87 A TRIP	Phase A differential trip
87 B TRIP	Phase B differential trip
87 C TRIP	Phase C differential trip
PROTEC. STATUS	Protection in / out of service
ACTIVE TABLE	Number of active table (1-3)
LOCAL CONNECTION	Local or remote connection
E2PROM COMM	Error (or lack of error) in the communications E2PROM
COMM SETTINGS	Communications settings (default or user's)
PROTECTION LINK	Link between protection and communications (present or not)
IRIGB LINK	IRIGB status
DATE / TIME STATUS	Shows date and time

11.4 OPERATIONS GROUP

This group allows to set the unit's date and time, as well as to perform an oscillography trigger.

In order to access this group you must press the ACT key, from the standby screen. These are the possible operations to be performed:

- Set date and time
- Communications trigger.

For changing the date and time, the following steps must be taken:

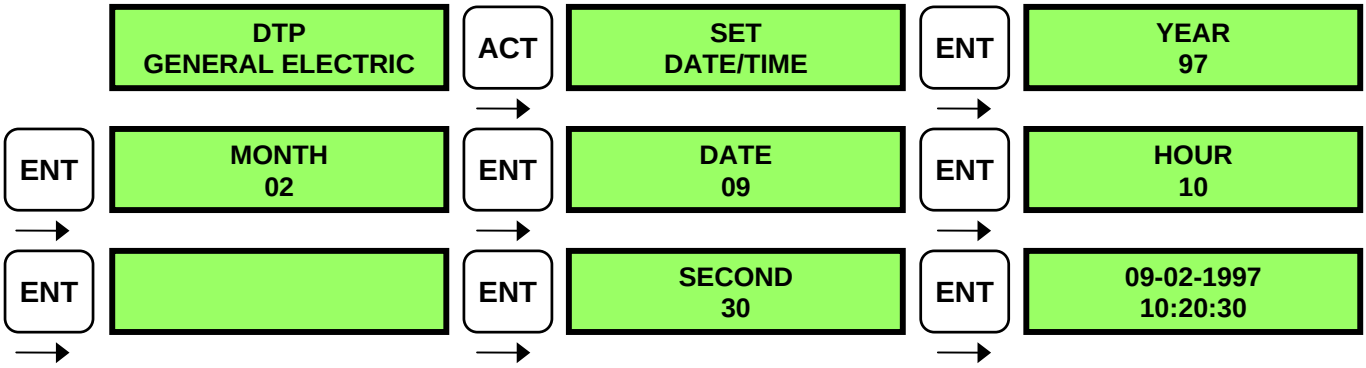

***NOTE** : If the user would like to replace the numerical value displayed by default, press the CLR key to clear the displayed value, and include the new one..*

The operation of the OSCILLOGRAPHY TRIGGER starts the oscillography register, and the storage of a record. Using the GE_LOCAL communication software, it is possible to retrieve the last four oscillography records and save them in a COMTRADE ASCII format file. In order to view these files, the GE_OSC software is needed.

11.5 SINGLE KEY OPERATION

The DTP has a simplified operation mode which can be used by pressing the ENT key repeatedly. This mode allows access to certain information about the relay without the need to remove the external methacrylate cover. This mode can only be accessed from the standby screen. The information available in this mode is shown in order in the following table:

MAGNITUDE	DESCRIPTION
DIFFERENTIAL Ia	Phase A differential current
DIFFERENTIAL Ib	Phase B differential current
DIFFERENTIAL Ic	Phase C differential current
DIF Ia 2ND HARM	Phase A 2nd harmonic current
DIF Ib 2ND HARM	Phase B 2nd harmonic current
DIF Ic 2ND HARM	Phase C 2nd harmonic current
DIF Ia 5TH HARM	Phase A 5th harmonic current
DIF Ib 5TH HARM	Phase B 5th harmonic current
DIF Ic 5TH HARM	Phase C 5th harmonic current
THROUGH Ia	Phase A through current
THROUGH Ib	Phase B through current
THROUGH Ic	Phase C through current
PROTECT. STATUS	Protection in / out of service
ACTIVE TABLE	Shows the active table #
DATE & TIME	Shows the unit's date and time

11.6 CONFIGURATION MENU

The DTP has a configuration menu which can only be accessed by means of the keyboard. The aim is to select the way in which the DTP will interact with the exterior.

To enter the configuration menu, start from the standby screen and use the keyboard to enter a four figure code. If the code is correct, entry to the configuration unit is permitted. If not, it returns to the reset screen.

The code is unique for all the DTP relays and is not intended to be a password, but rather a simple safety measure to avoid accidental changes to the configuration. This code is 7169, as this is the ASCII code for the initials GE. This is how to enter the configuration unit from the reset screen:



The value and meaning of the settings are explained below. Note that movement between the options in this group is with the right/left arrow keys.

- **NET. BAUDRATE**: The speed in bauds which the DTP will use for serial communications through the remote port. The possible speeds are between 1200 and 115000 bauds.
- **NET.STOP BITS**: The number of stop bits which are added to each byte which is transmitted on the serial line. It is treated as a binary logic setting selected by means of the logic key 1/Y for 1 and 3/N for 2.
- **LOC. BAUDRATE**: The speed in bauds which the DTP will use for serial communications through the local port. The possible speeds are between 1200 and 19200 bauds.
- **LOC. STOP BITS:** As above but for local communications.
- **LOCAL SETTINGS**: Settings changes by local communications (allowed / not allowed).
- **REM SETTINGS**: Settings changes by remote communications (allowed / not allowed).
- **LOC OPERATIONS**: Operations being performed by local communications (computer directly connected) (allowed / not allowed).
- **REM OPERATIONS**: Operations being performed by remote communications (e.g. modem) (allowed/not allowed).
- **UNIT NUMBER**: Each DTP is identified by a unit number used for identifying the messages which are sent to it on a remote communications line with several connected equipment. This number can be between 1 and 255.
- **PASSWORD**: To prevent unauthorised persons from communicating with the relay via a communications program and changing the settings or performing operations, the relay has a password. This password can only be seen on the relay display and is a number between 0 and 99999.
- **t TIME-OUT:** Maximum external synchronization time for avoiding an event out of time.

12. FIGURES

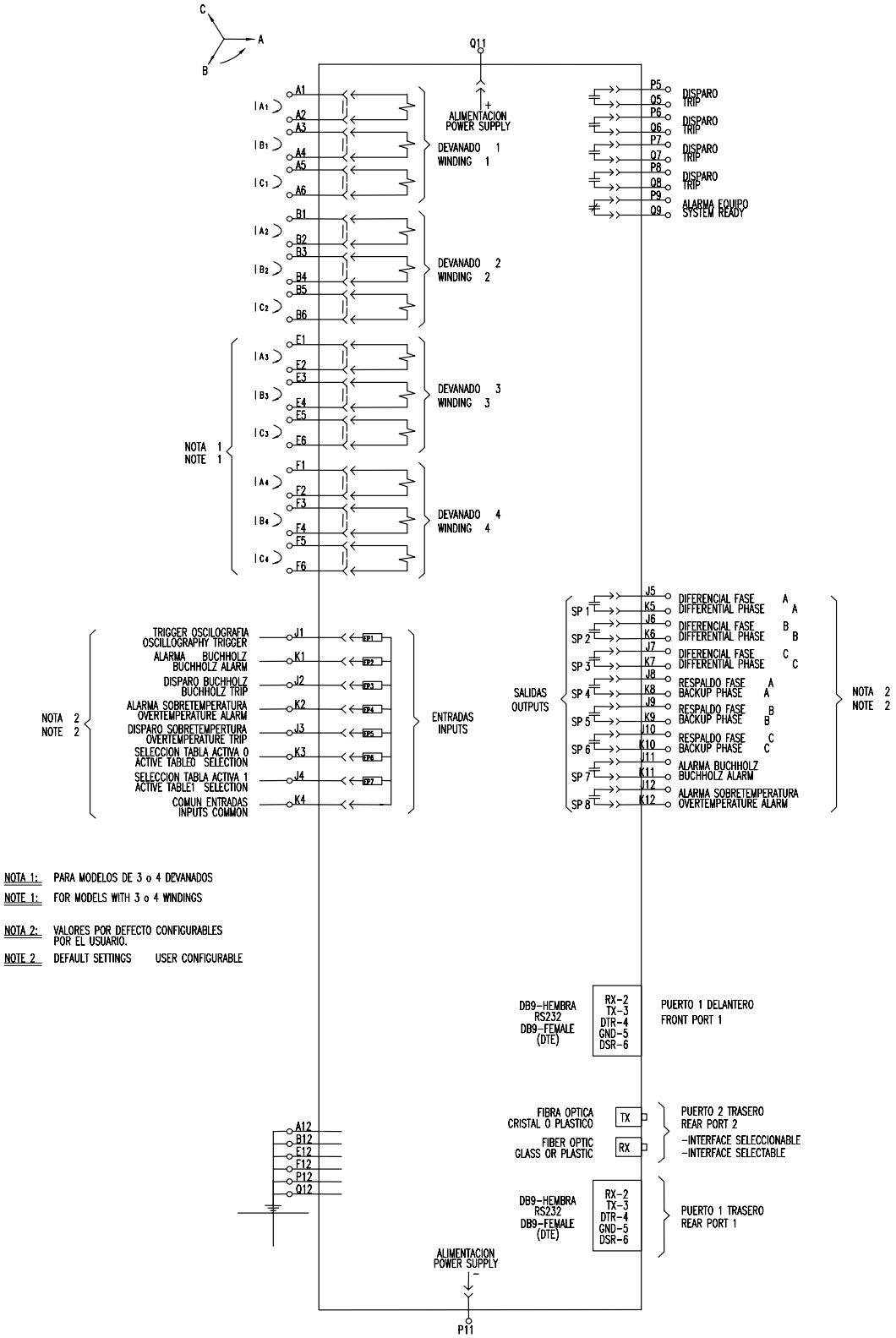

***Figure 1** : External Connections*

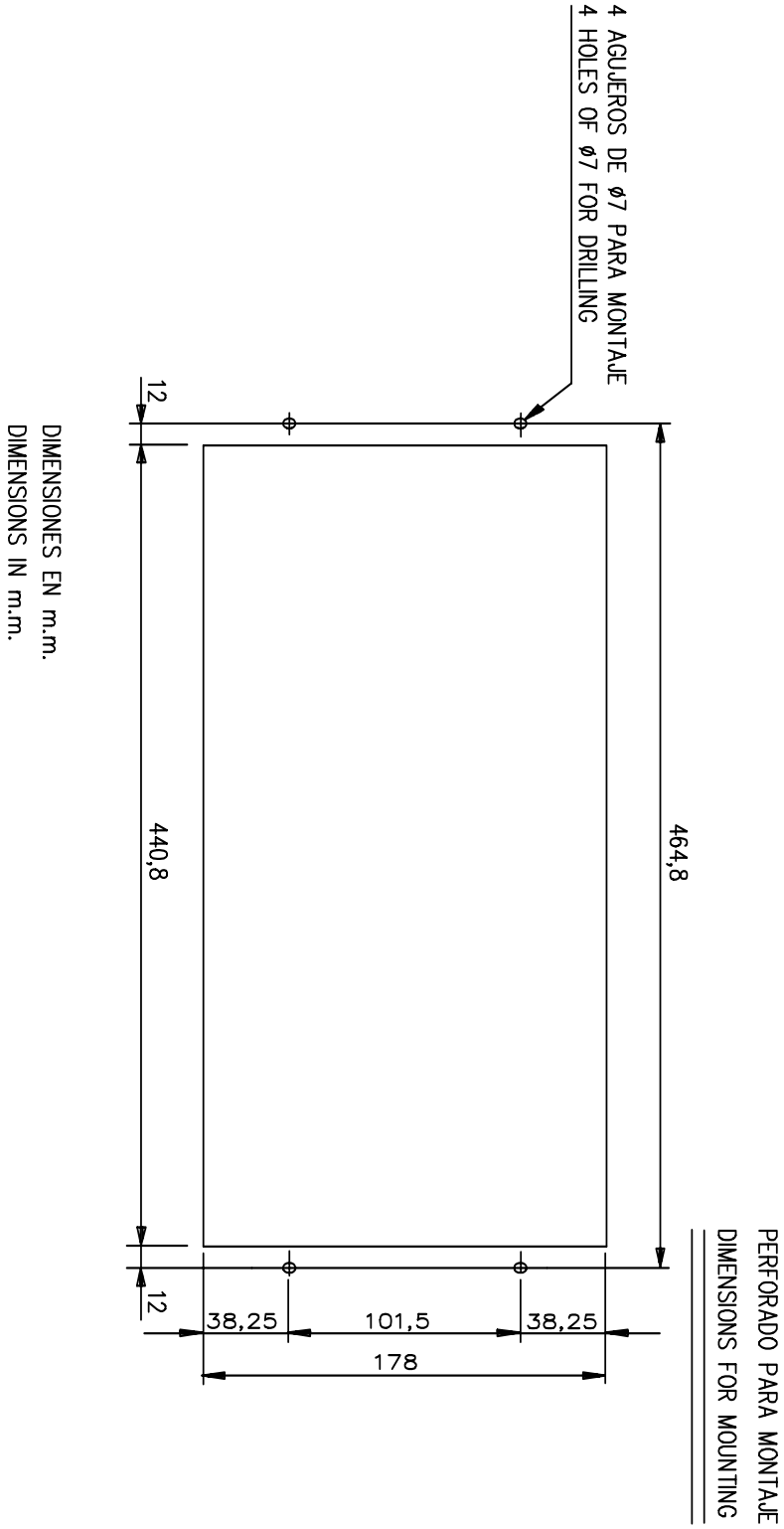

Figure 2: *Panel Drilling Dimensions*

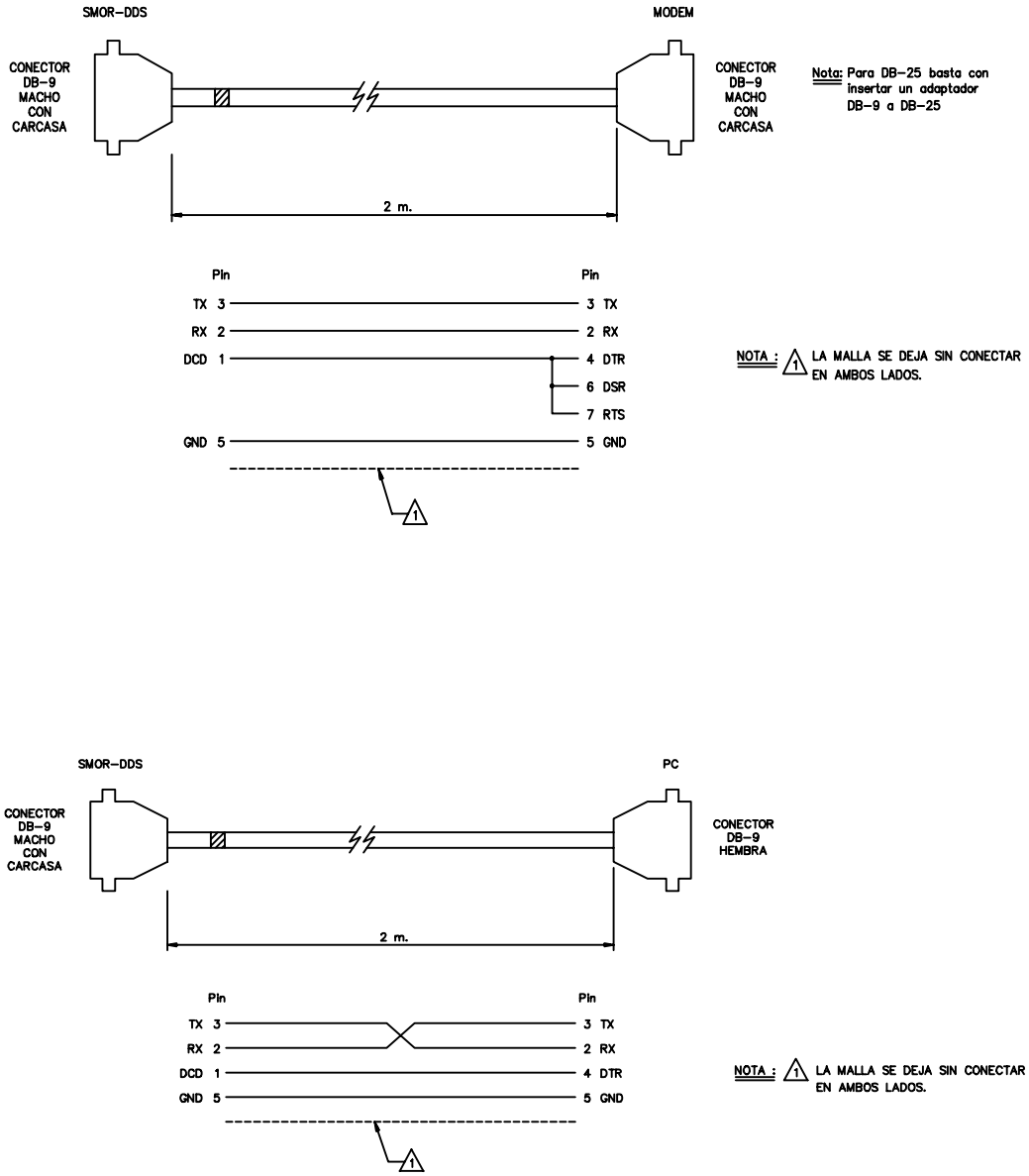

Figure 3. *RS-232 Connection*

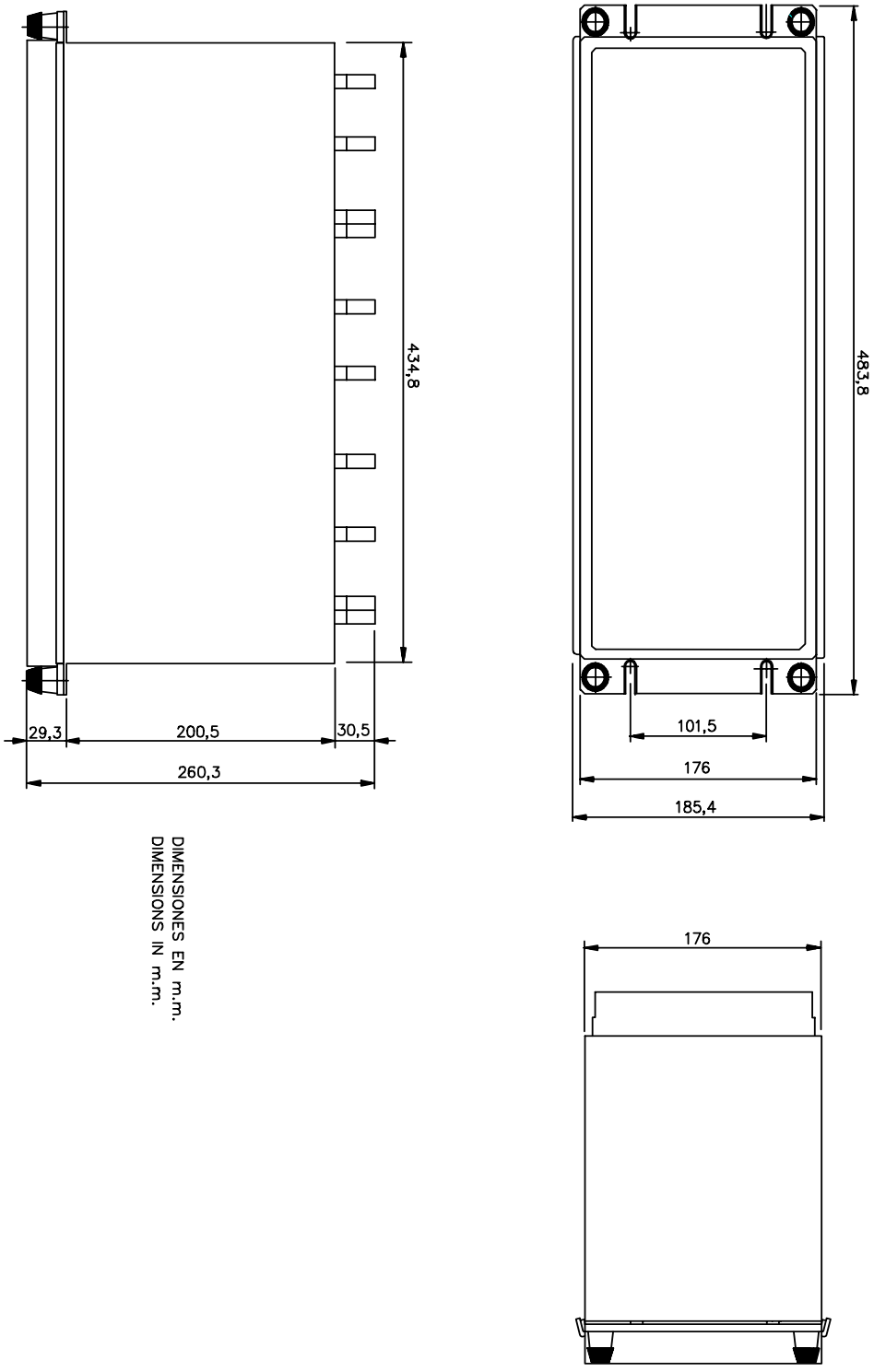

Figure 4: *Dimensions Diagram*

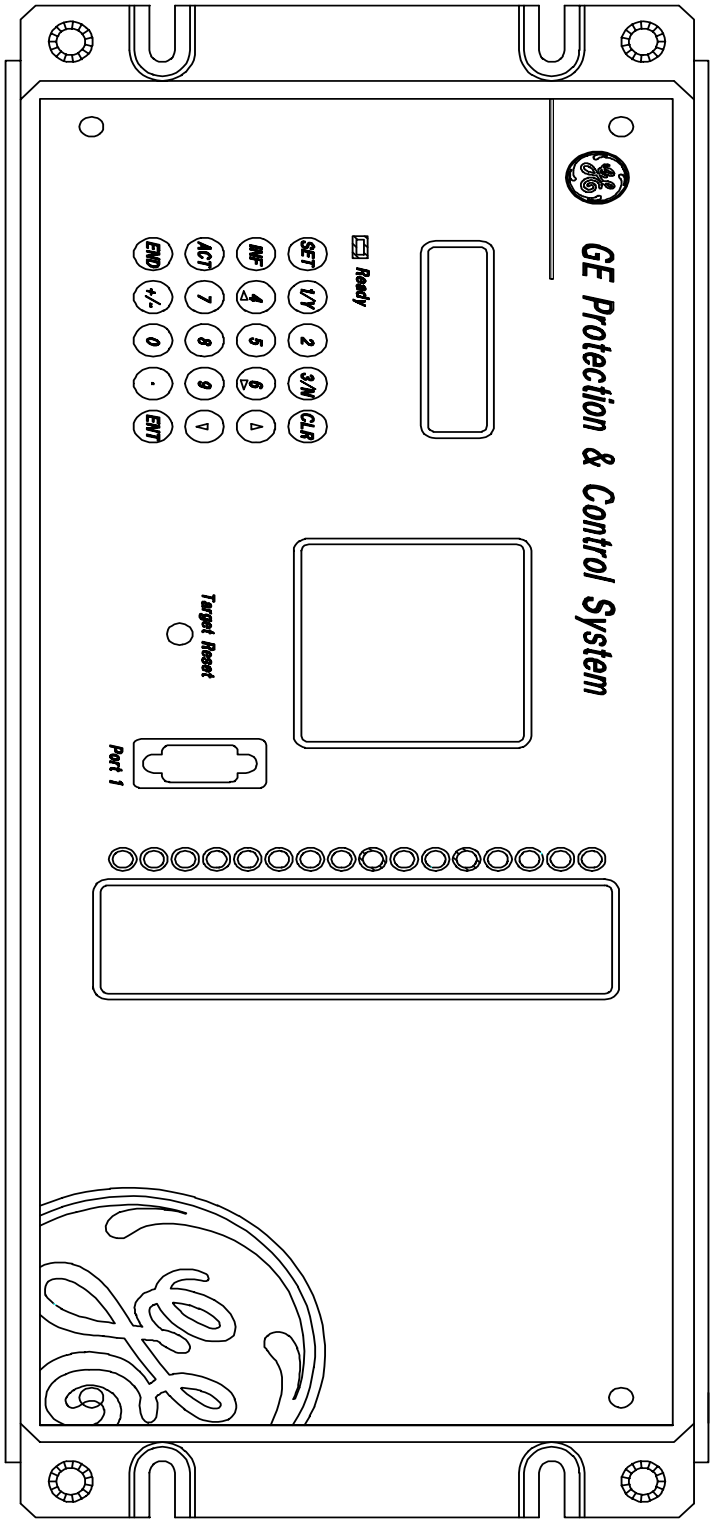

Figure 5: *Front View*

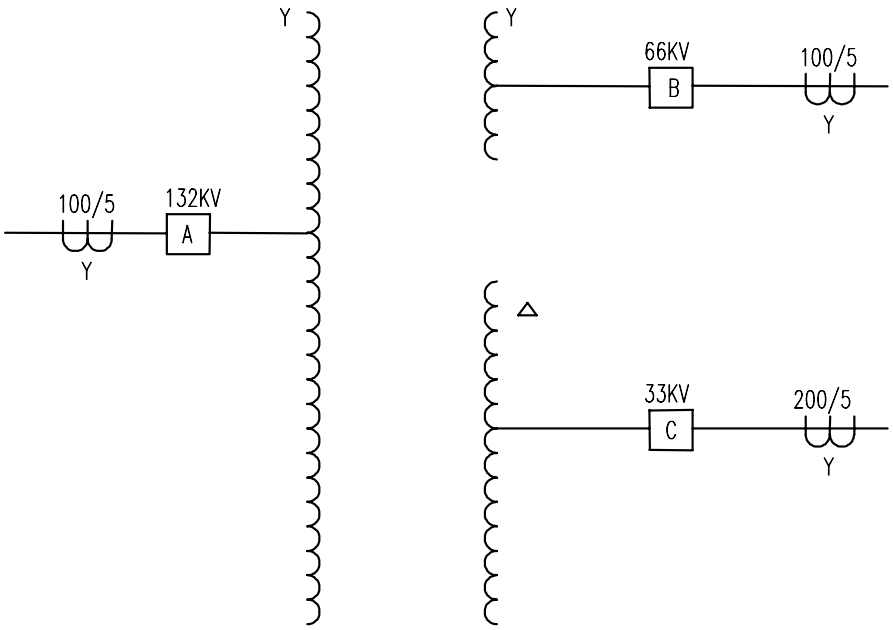

4000KVA(5000KVA FORCED COOLING)

THE INDICATED RATIOS FOR MAIN CTS ARE USED IN THE FIRST ITERATION OF THE CALCULATION EXAMPLE. THE MAIN CT CONNECTIONS SHOWN (ALL WYE-CONNECTED) ARE SO BECAUSE THE PHASE SHIFT IS PERFORMED BY THE RELAY.

Figure 6: *Sample Transformer for the Calculation of Settings*

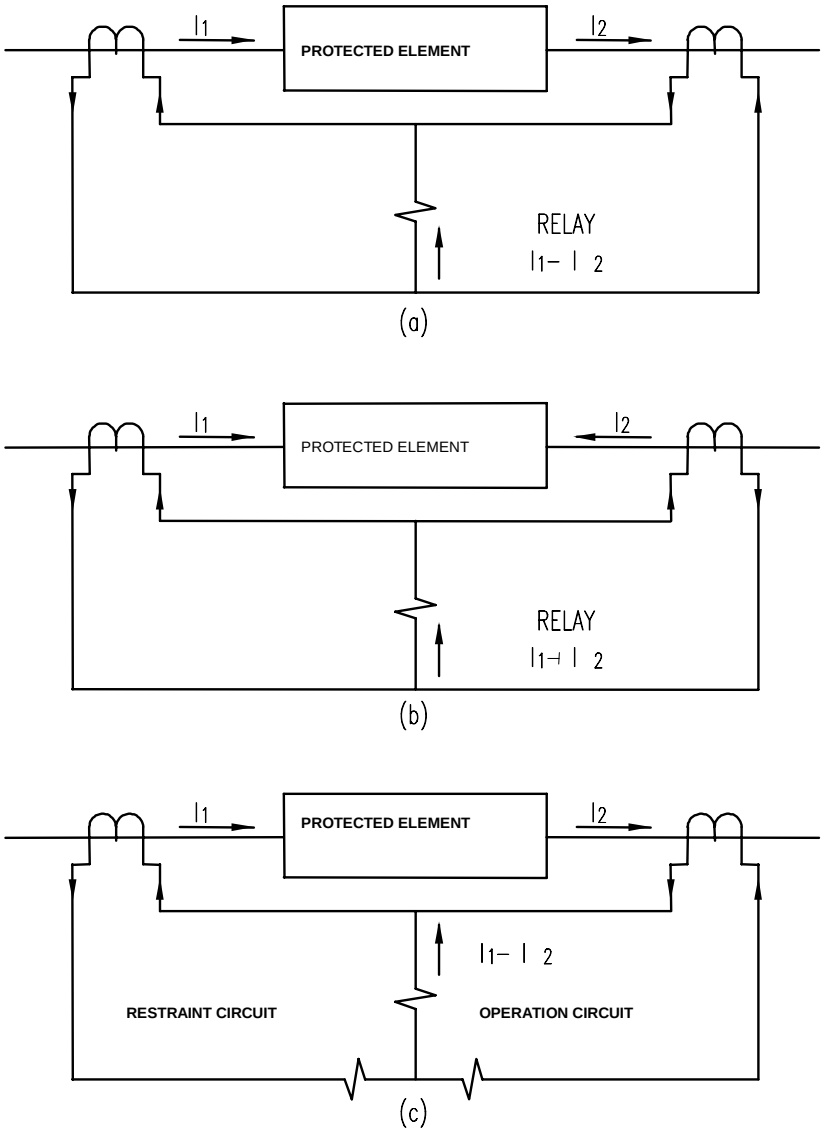

Figure 7 : *Operating Principles of the Differential Protection*

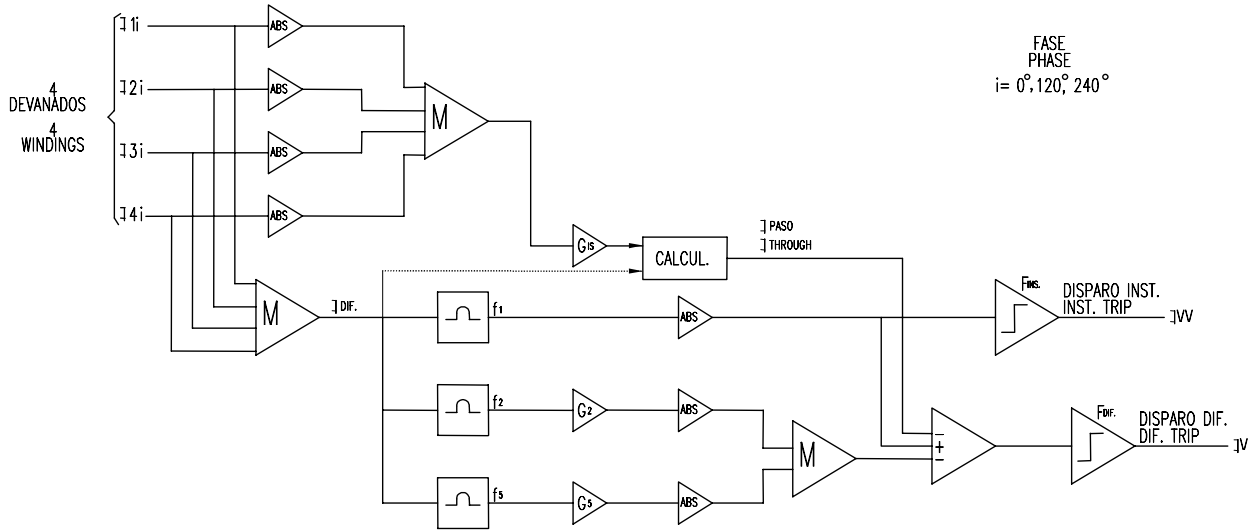

Figure 8: *Block Diagram of the Protection*

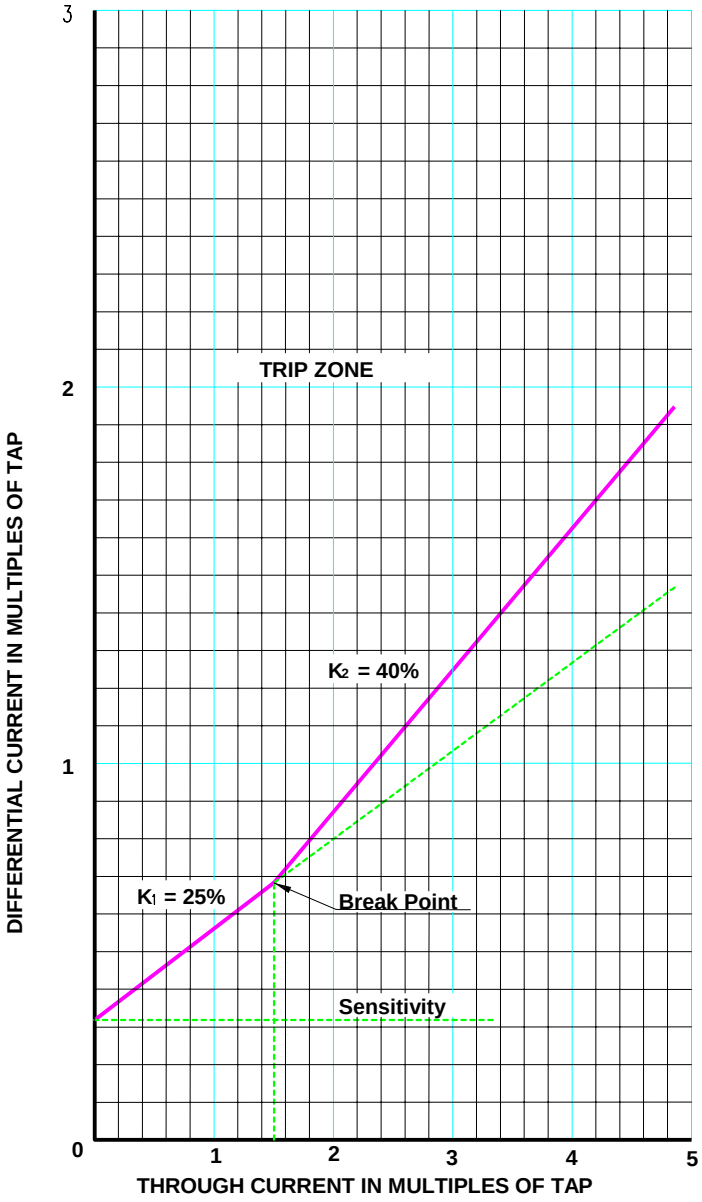

Figure 9: *Percentage Characteristic*

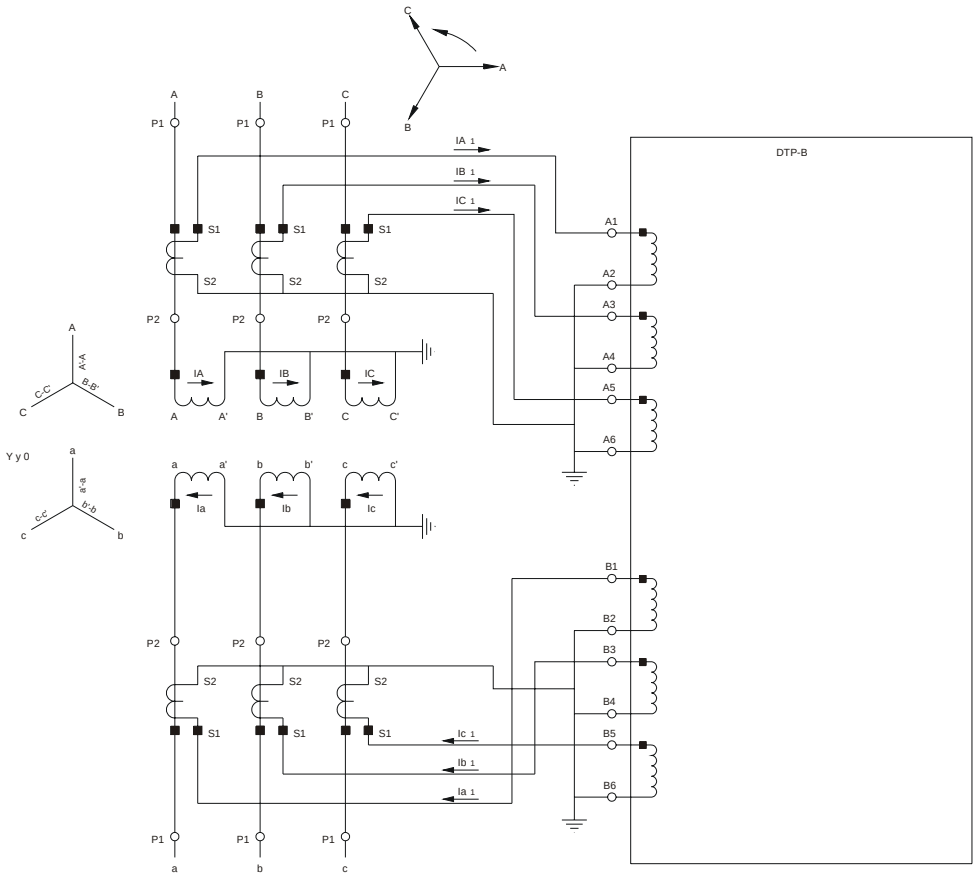

WIRING FOR DTP-B RELAY CURRENT CIRCUITS FOR
Y y O CONNECTION POWER TRANSFORMERS

GENERAL SETTINGS	
COMPENSATION	INTERNAL
PROTECTION SETTINGS	
1 ST WINDING CONN	Y
2 ND WINDING CONN	y
2 ND WDG H GROUP	O
---------	---------
1 ST WDG CT CONN	Y0
2 ND WDG CT CONN	y0
---------	---------

SETTINGS FOR Y y O CONNECTION

Figure 10. *Internal match of power transformer connection. (189C4218)*

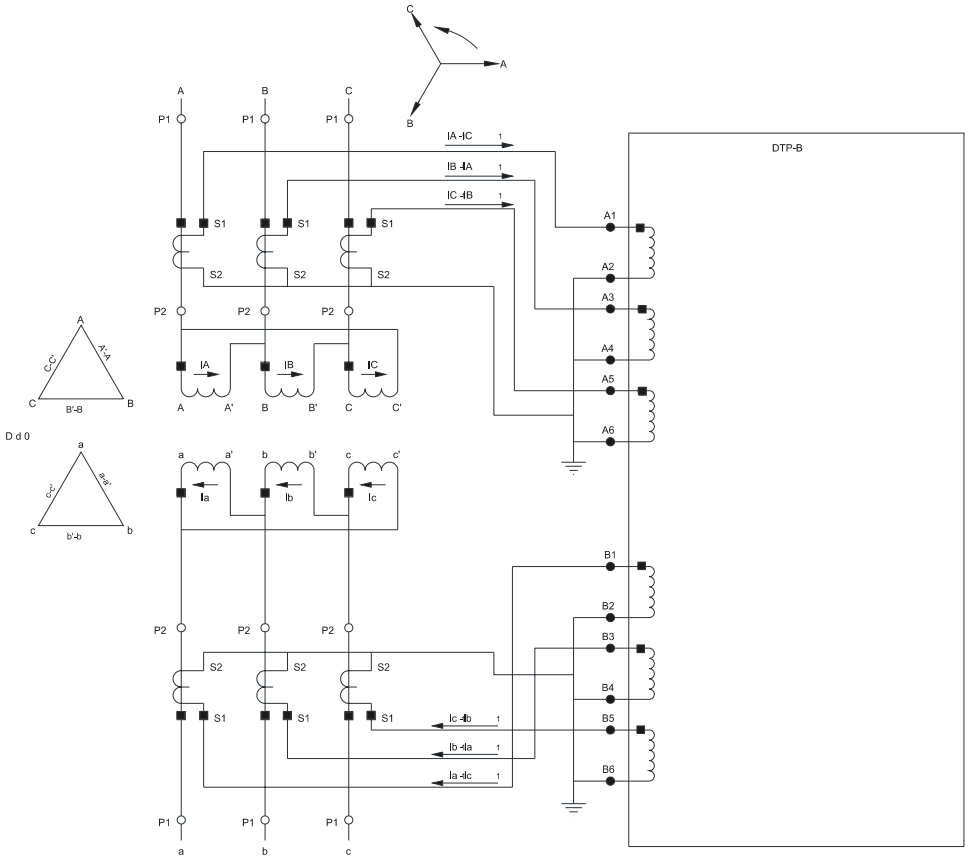

WIRING FOR DTP-B RELAY CURRENT CIRCUITS FOR
D d O CONNECTION POWER TRANSFORMERS

GENERAL SETTINGS	
COMPENSATION	INTERNAL
PROTECTION SETTINGS	
1 ST WINDING CONN	D
2 ND WINDING CONN	d
2 ND WDG H GROUP	O
---------	---------
1 ST WDG CT CONN	Y0
2 ND WDG CT CONN	y0
---------	---------

SETTINGS FOR D d O CONNECTION

Figure 11. *Internal match of power transformer connection. (189C4218)*

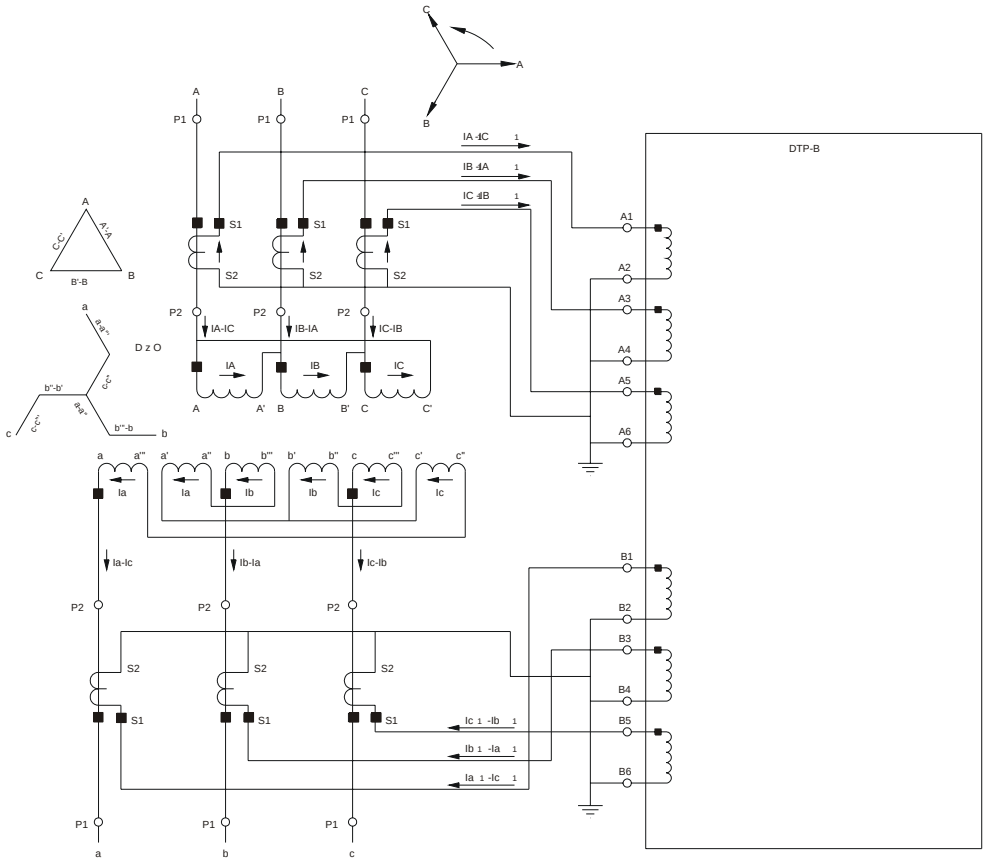

WIRING FOR DTP-B RELAY CURRENT CIRCUITS FOR
D z O CONNECTION POWER TRANSFORMERS

GENERAL SETTINGS	
COMPENSATION	INTERNAL
PROTECTION SETTINGS	
1 ST WINDING CONN	D
2 ND WINDING CONN	zz
2 ND WDG H GROUP	O
---	---
1 ST WDG CT CONN	Y0
2 ND WDG CT CONN	y0
---	---

SETTINGS FOR D z O CONNECTION

Figure 12. *Internal match of power transformer connection. (189C4218)*

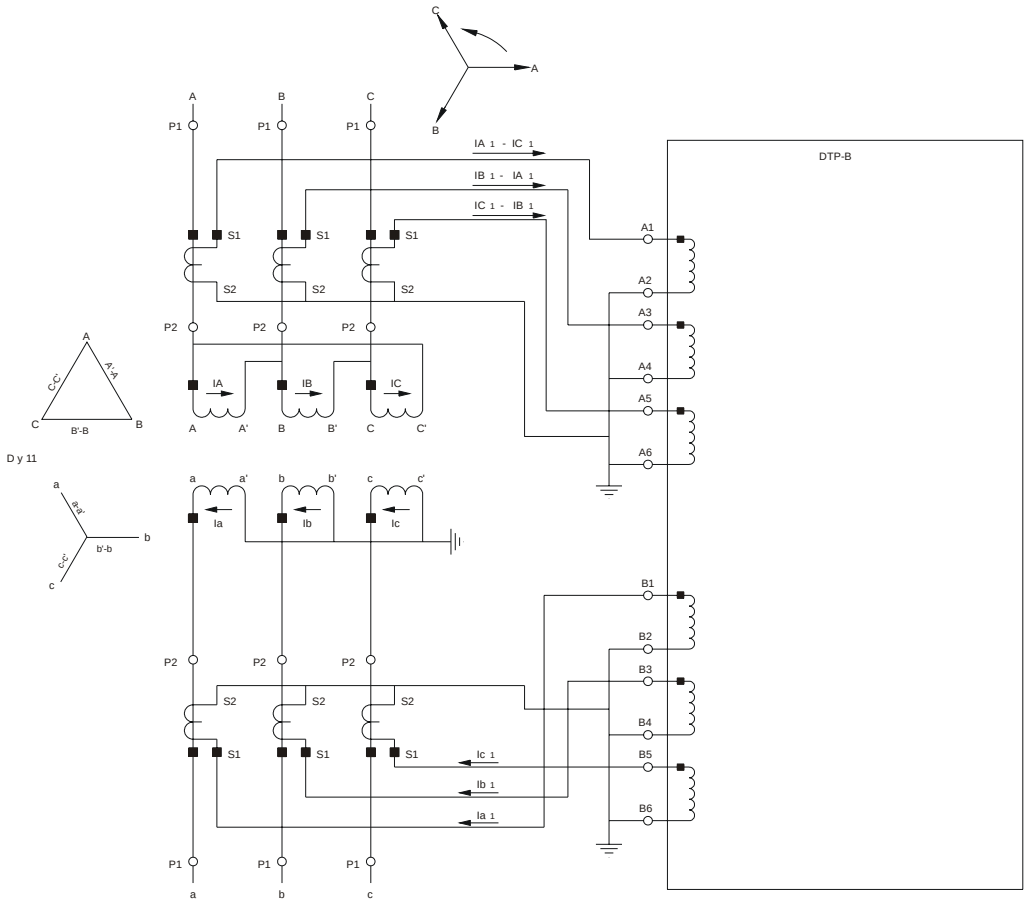

GENERAL SETTINGS	
COMPENSATION	INTERNAL
PROTECTION SETTINGS	
1 ST WINDING CONN	D
2 ND WINDING CONN	y
2 ND WDG H GROUP	11
---------	---------
1 ST WDG CT CONN	Y0
2 ND WDG CT CONN	y0
---------	---------

SETTINGS FOR D y 11 CONNECTION

Figure 13. *Internal match of power transformer connection. (189C4218)*

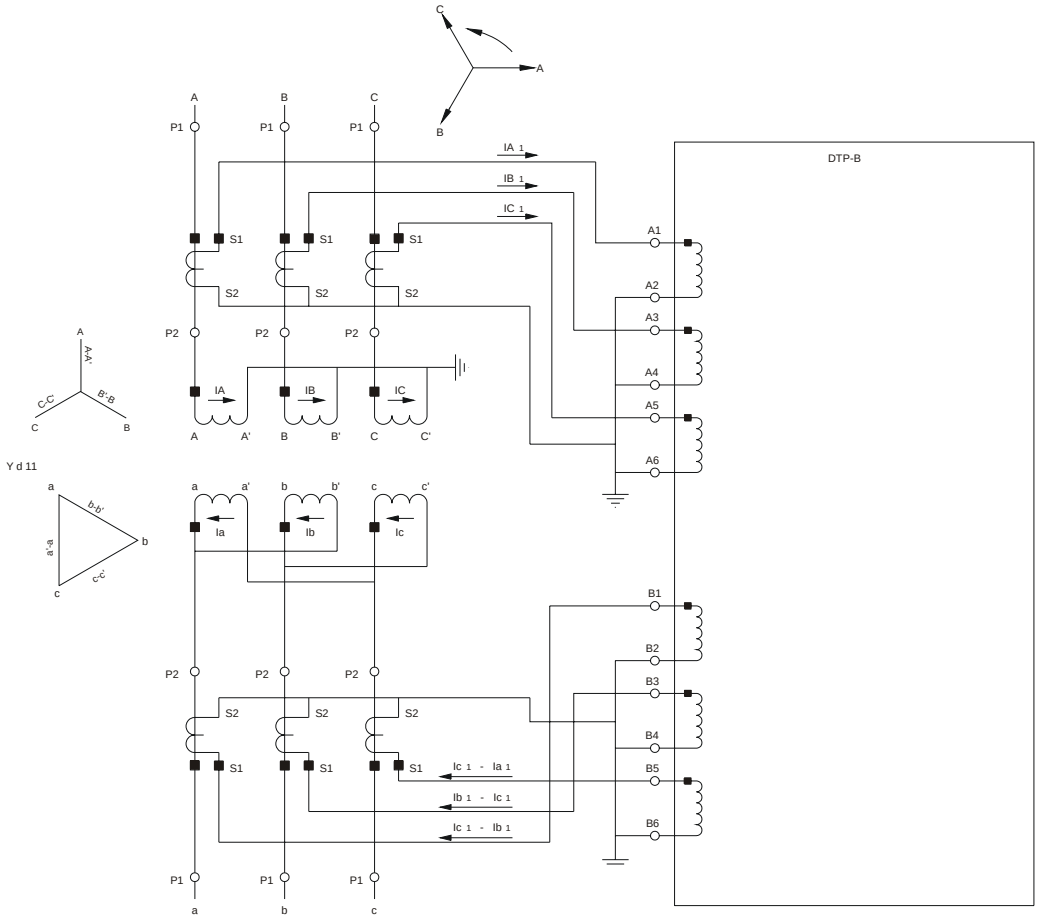

WIRING FOR DTP-B RELAY CURRENT CIRCUITS FOR
Y d 11 CONNECTION POWER TRANSFORMERS

GENERAL SETTINGS	
COMPENSATION	INTERNAL
PROTECTION SETTINGS	
1 ST WINDING CONN	Y
2 ND WINDING CONN	d
2 ND WDG H GROUP	11
---------	---------
1 ST WDG CT CONN	Y0
2 ND WDG CT CONN	y0
---------	---------

SETTINGS FOR Y d 11 CONNECTION

Figure 14. *Internal match of power transformer connection. (189C4218)*

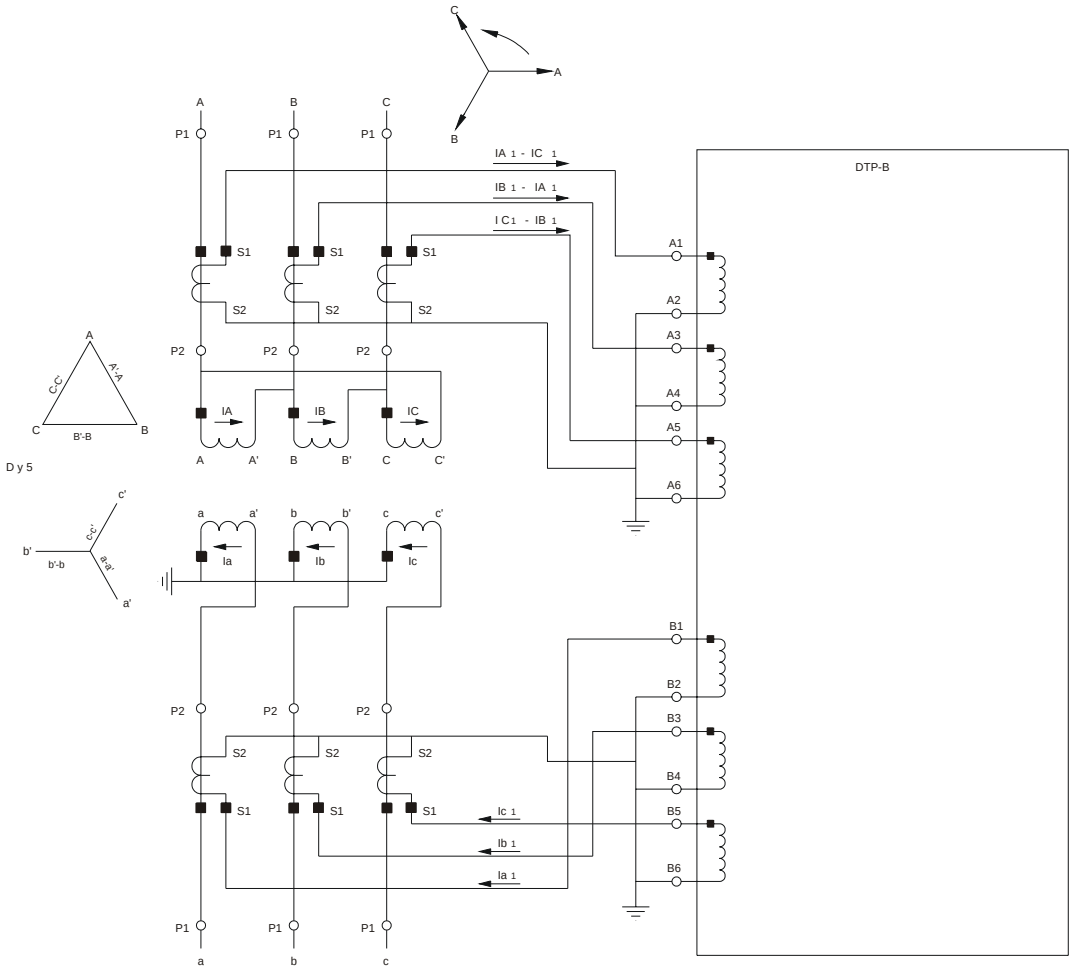

WIRING FOR DTP-B RELAY CURRENT CIRCUITS FOR
D y 5 CONNECTION POWER TRANSFORMERS

GENERAL SETTINGS	
COMPENSATION	INTERNAL
PROTECTION SETTINGS	
1 ST WINDING CONN	D
2 ND WINDING CONN	y
2 ND WDG H GROUP	5
---------	---------
1 ST WDG CT CONN	Y0
2 ND WDG CT CONN	y0
---------	---------

SETTINGS FOR D y 5 CONNECTION

Figure 15. *Internal match of power transformer connection. (189C4218)*

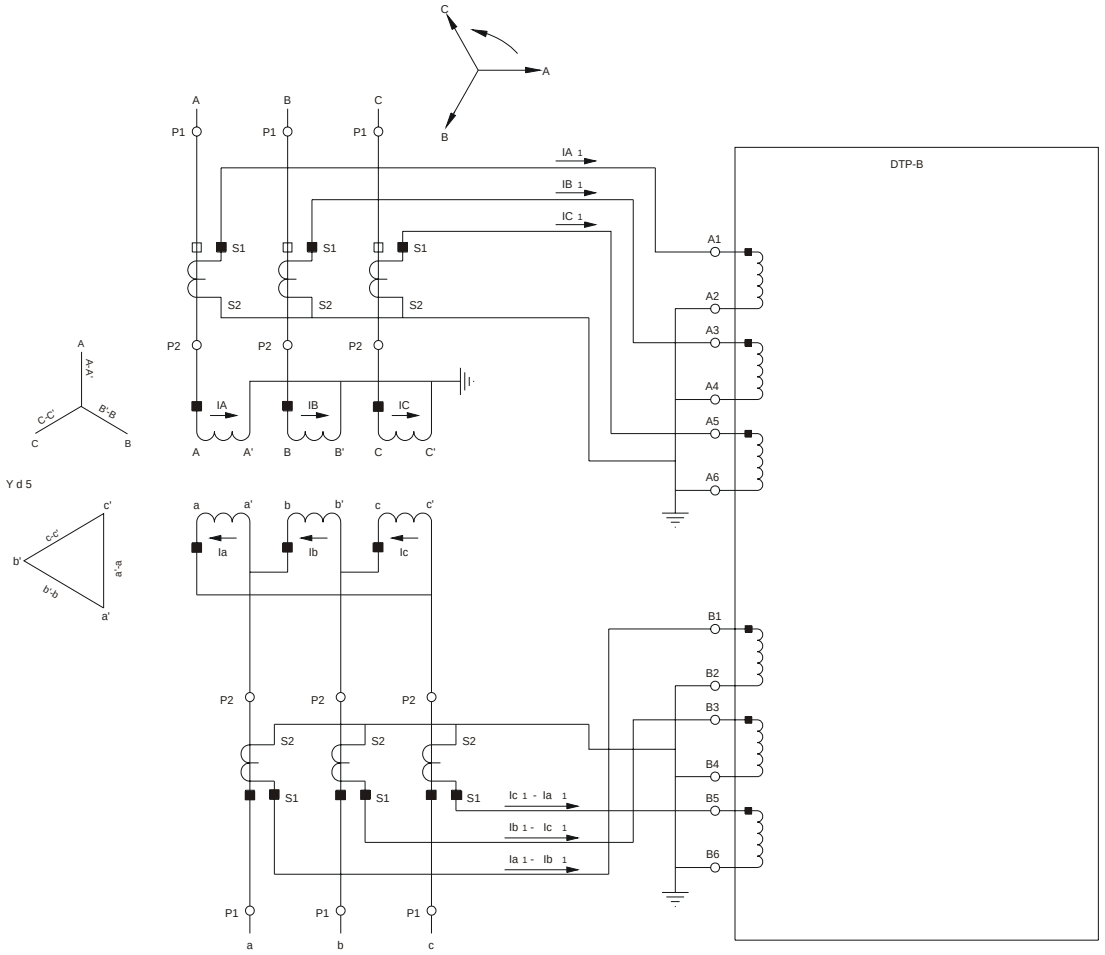

GENERAL SETTINGS	
COMPENSATION	INTERNAL
PROTECTION SETTINGS	
1 ST WINDING CONN	Y
2 ND WINDING CONN	d
2 ND WDG H GROUP	5
---	---
1 ST WDG CT CONN	Y0
2 ND WDG CT CONN	y0
---	---

SETTINGS FOR Y d 5 CONNECTION

Figure 16. *Internal match of power transformer connection. (189C4218)*

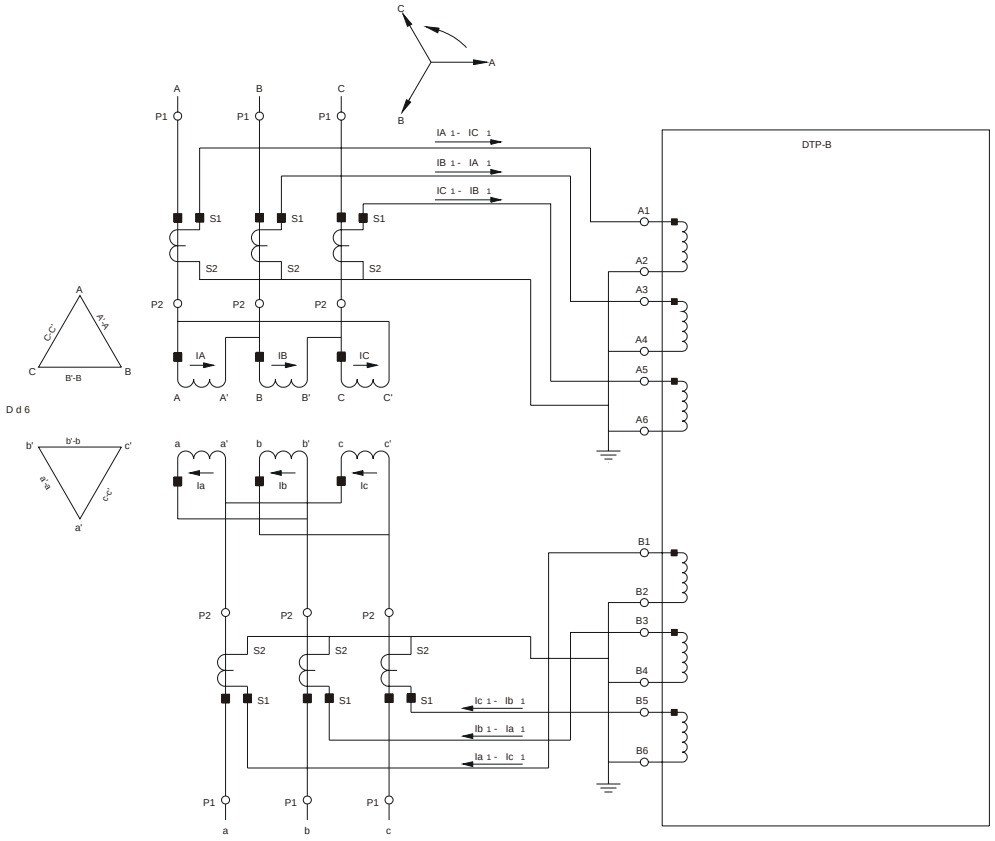

GENERAL SETTINGS	
COMPENSATION	INTERNAL
PROTECTION SETTINGS	
1 ST WINDING CONN	D
2 ND WINDING CONN	d
2 ND WDG H GROUP	6
---------	---------
1 ST WDG CT CONN	Y0
2 ND WDG CT CONN	y0
---------	---------

SETTINGS FOR D d 6 CONNECTION

Figure 17. *Internal match of power transformer connection. (189C4218)*

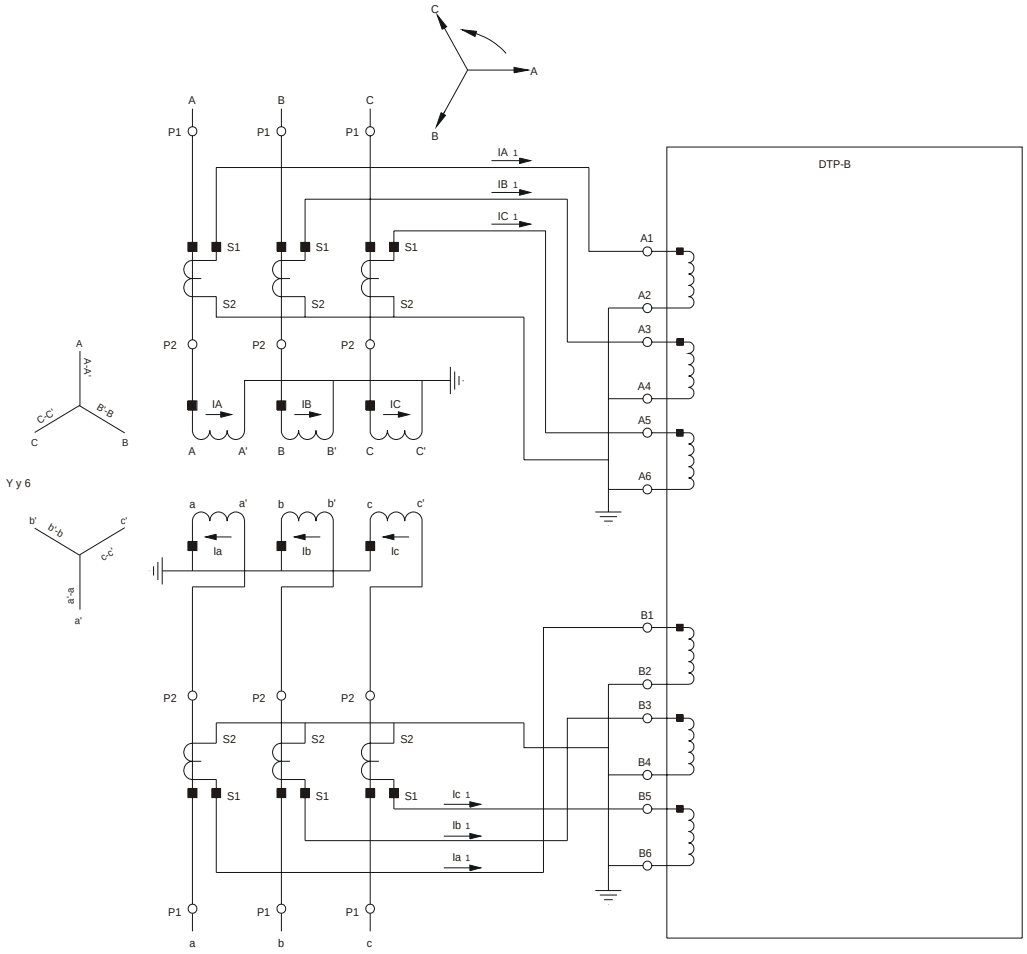

WIRING FOR DTP-B RELAY CURRENT CIRCUITS FOR
Y y 6 CONNECTION POWER TRANSFORMERS

GENERAL SETTINGS	
COMPENSATION	INTERNAL
PROTECTION SETTINGS	
1 ST WINDING CONN	Y
2 ND WINDING CONN	y
2 ND WDG H GROUP	6
---	---
1 ST WDG CT CONN	Y0
2 ND WDG CT CONN	y0
---	---

SETTINGS FOR Y y 6 CONNECTION

Figure 18. *Internal match of power transformer connection. (189C4218)*

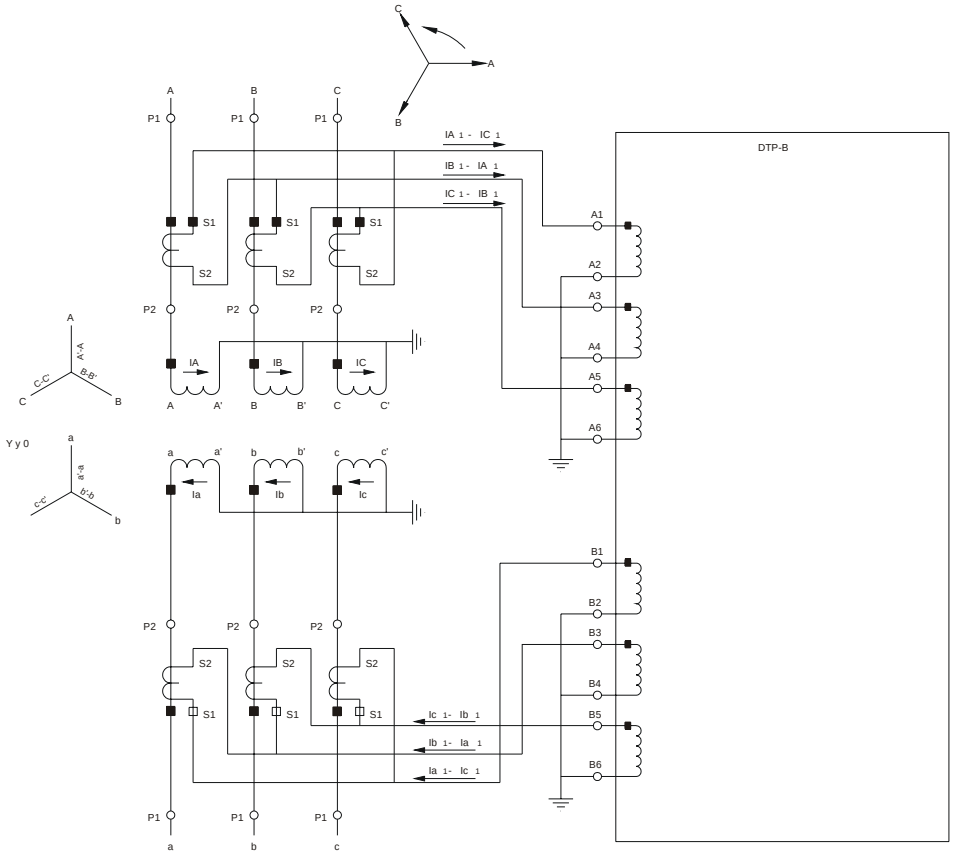

WIRING FOR DTP-B RELAY CURRENT CIRCUITS FOR
Y y O CONNECTION POWER TRANSFORMERS

GENERAL SETTINGS	
COMPENSATION	EXTERNAL
PROTECTION SETTINGS	
1 ST WINDING CONN	NA
2 ND WINDING CONN	NA
2 ND WDG H GROUP	NA
---------	---------
1 ST WDG CT CONN	NA
2 ND WDG CT CONN	NA
---------	---------

NA: Not applicable. (not used when compensation is set to EXTERNAL)

SETTINGS FOR Y y O CONNECTION

Figure 19. *External match of power transformer connection. (189C4218)*

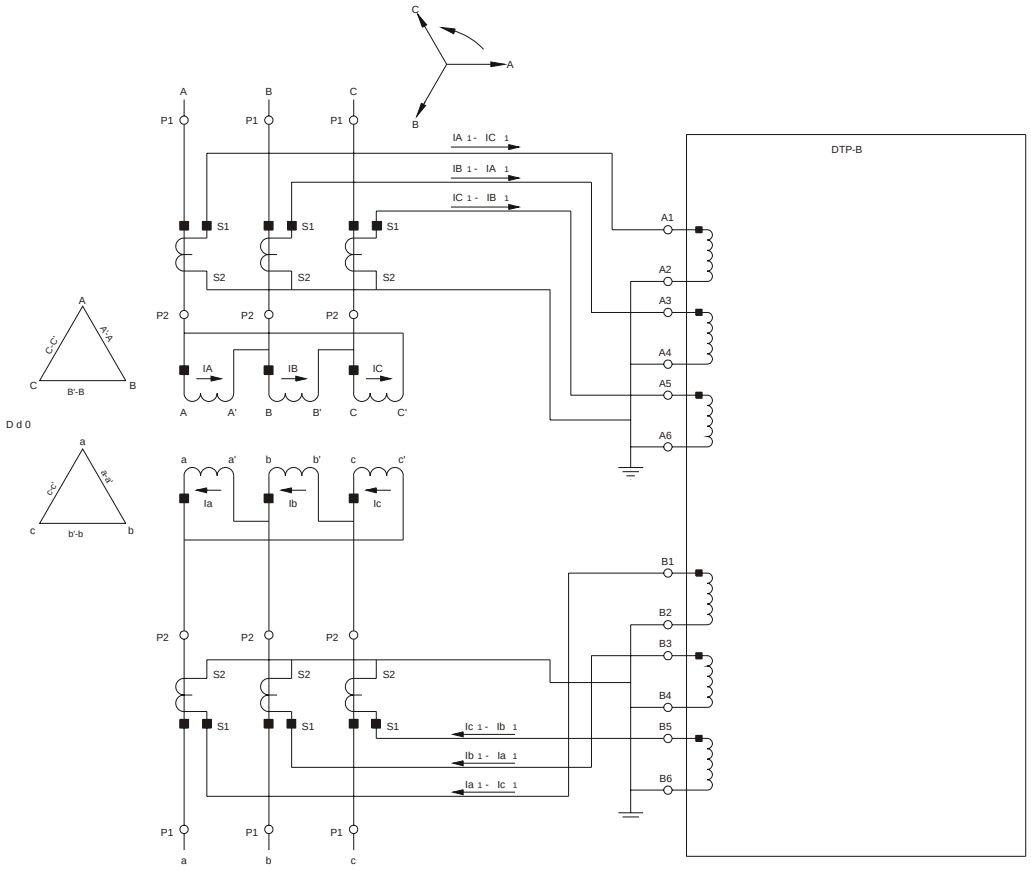

GENERAL SETTINGS	
COMPENSATION	EXTERNAL
PROTECTION SETTINGS	
1 ST WINDING CONN	NA
2 ND WINDING CONN	NA
2 ND WDG H GROUP	NA
---------	---------
1 ST WDG CT CONN	NA
2 ND WDG CT CONN	NA
---------	---------

NA: Not applicable. (not used when compensation is set to EXTERNAL)

SETTINGS FOR D d O CONNECTION

Figure 20. *External match of power transformer connection. (189C4218)*

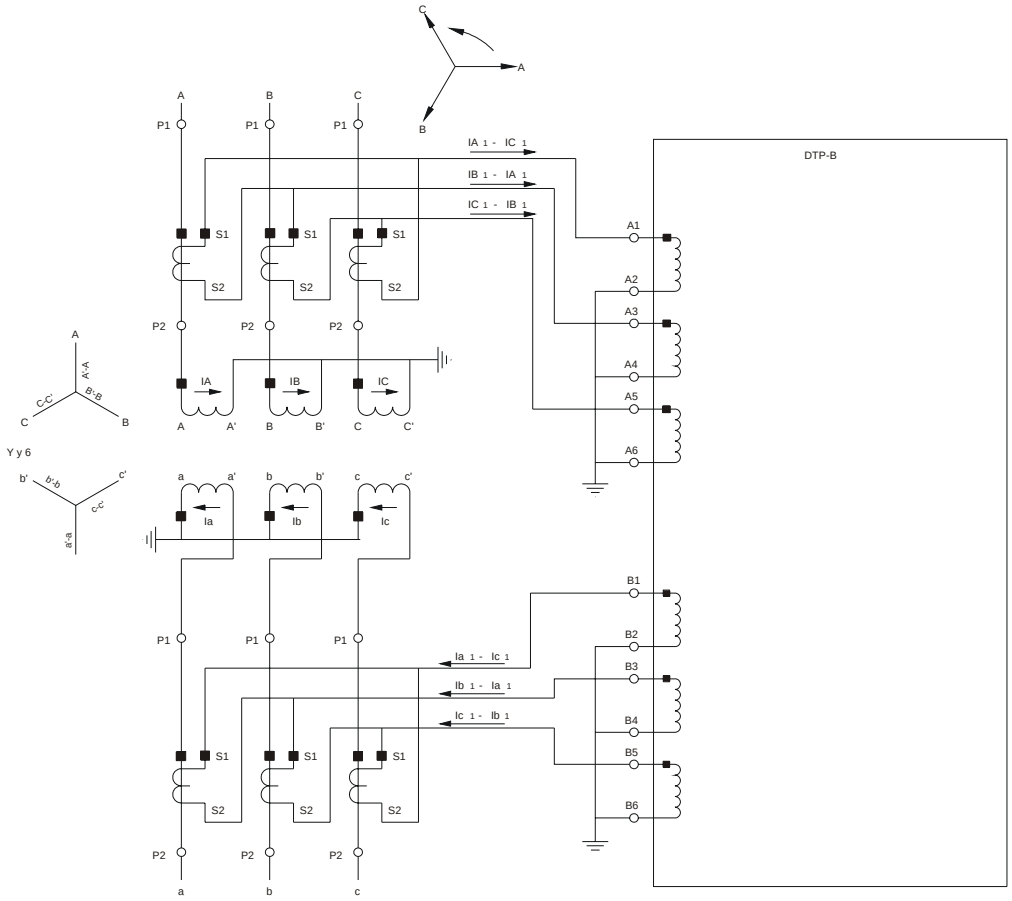

WIRING FOR DTP-B RELAY CURRENT CIRCUITS FOR
Y y 6 CONNECTION POWER TRANSFORMERS

GENERAL SETTINGS	
COMPENSATION	EXTERNAL
PROTECTION SETTINGS	
1 ST WINDING CONN	NA
2 ND WINDING CONN	NA
2 ND WDG H GROUP	NA
---------	---------
1 ST WDG CT CONN	NA
2 ND WDG CT CONN	NA
---------	---------

NA: Not applicable. (not used when compensation is set to EXTERNAL)

SETTINGS FOR Y y 6 CONNECTION

Figure 21. *External match of power transformer connection. (189C4218)*

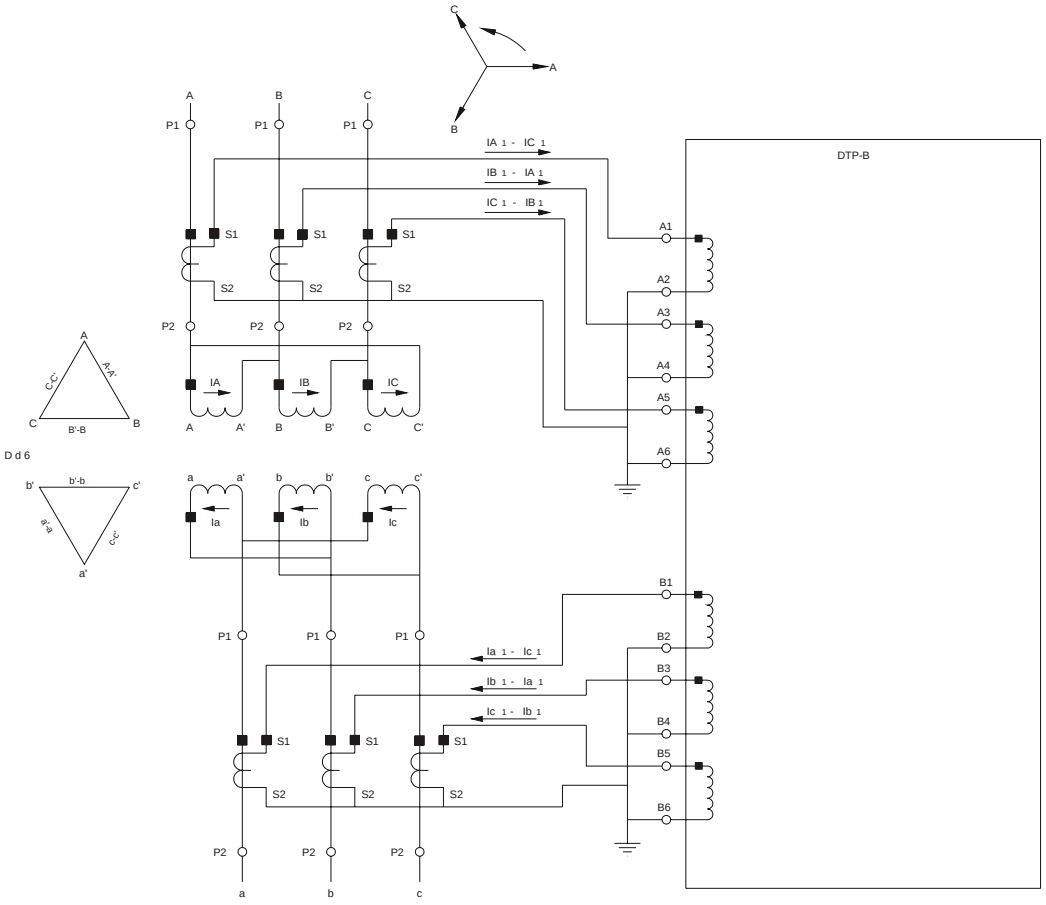

WIRING FOR DTP-B RELAY CURRENT CIRCUITS FOR
D d 6 CONNECTION POWER TRANSFORMERS

GENERAL SETTINGS	
COMPENSATION	EXTERNAL
PROTECTION SETTINGS	
1 ST WINDING CONN	NA
2 ND WINDING CONN	NA
2 ND WDG H GROUP	NA
---------	---------
1 ST WDG CT CONN	NA
2 ND WDG CT CONN	NA
---------	---------

NA: Not applicable. (not used when compensation is set to EXTERNAL)

SETTINGS FOR D d 6 CONNECTION

Figure 22. *External match of power transformer connection. (189C4218)*

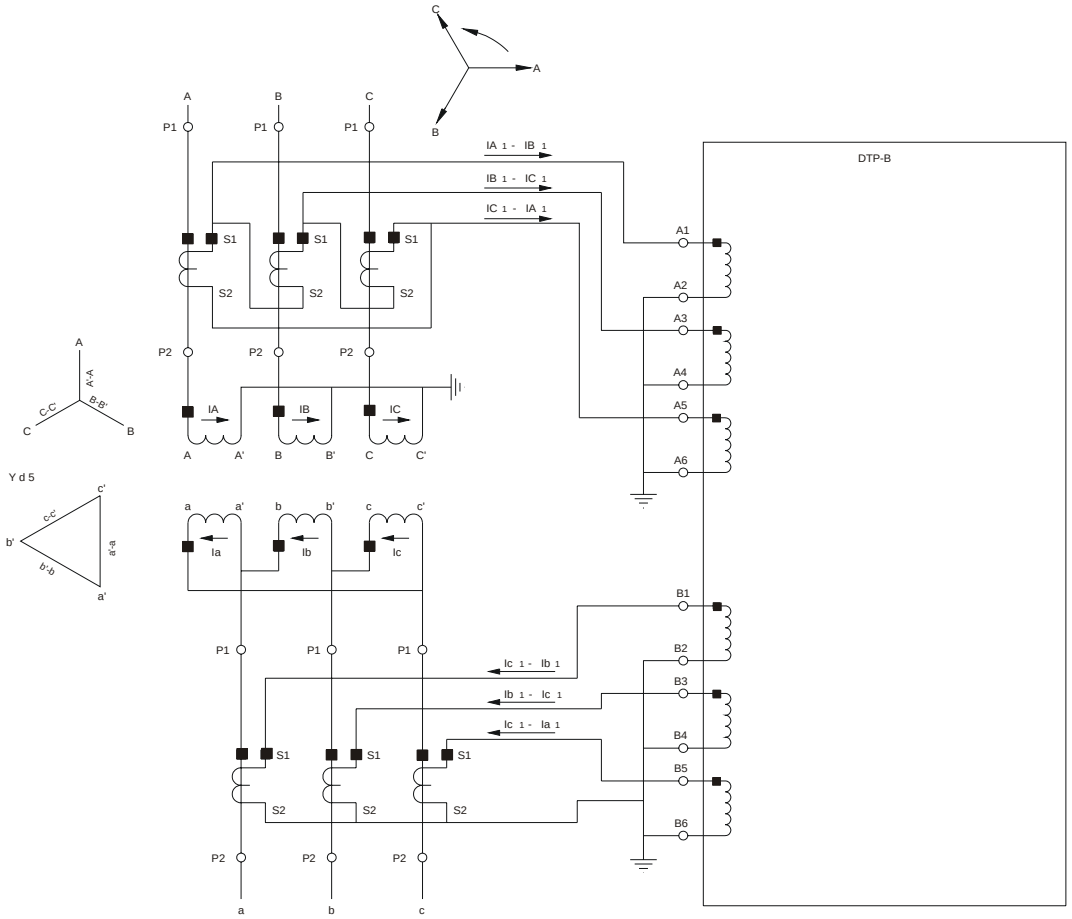

WIRING FOR DTP-B RELAY CURRENT CIRCUITS FOR
Y d 5 CONNECTION POWER TRANSFORMERS

GENERAL SETTINGS	
COMPENSATION	EXTERNAL
PROTECTION SETTINGS	
1 ST WINDING CONN	NA
2 ND WINDING CONN	NA
2 ND WDG H GROUP	NA
---	---
1 ST WDG CT CONN	NA
2 ND WDG CT CONN	NA
---	---

NA: Not applicable. (not used when compensation is set to EXTERNAL)

SETTINGS FOR Y d 5 CONNECTION

Figure 23. *External match of power transformer connection. (189C4218)*

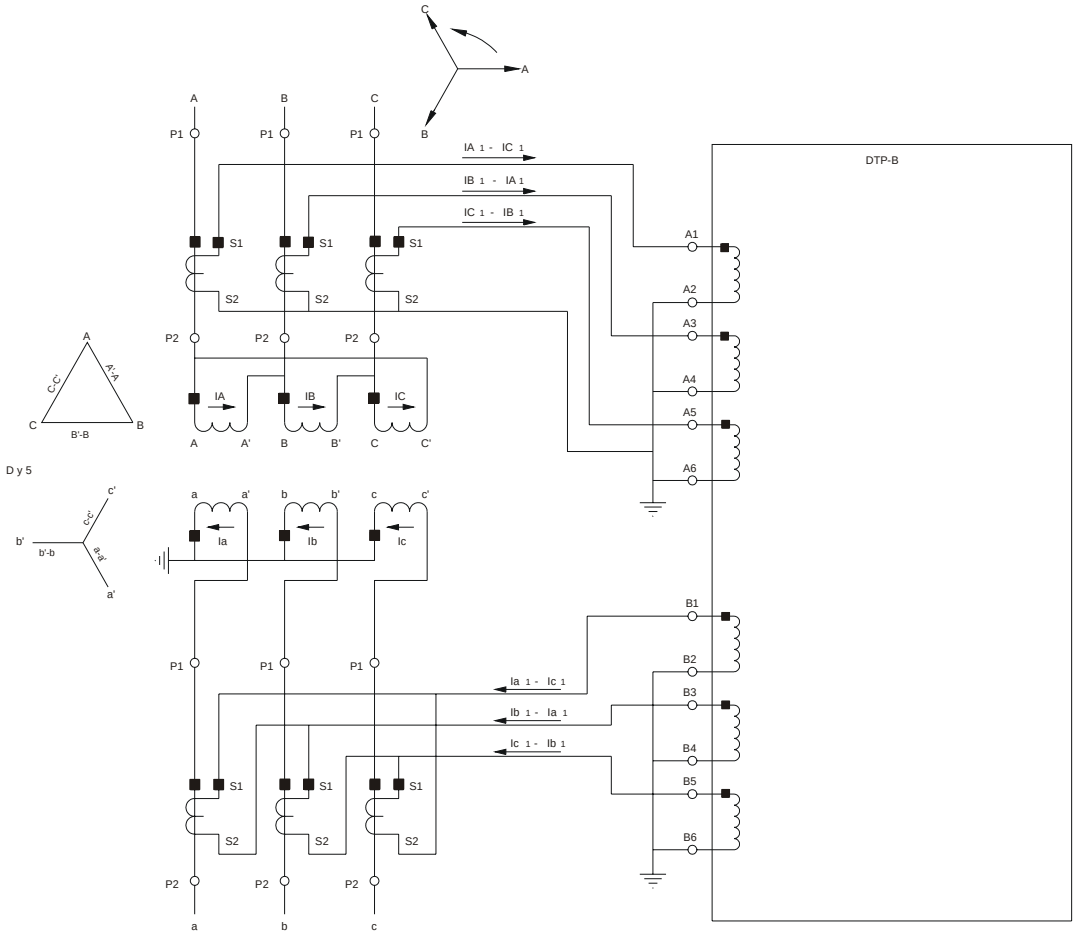

WIRING FOR DTP-B RELAY CURRENT CIRCUITS FOR
D y 5 CONNECTION POWER TRANSFORMERS

GENERAL SETTINGS	
COMPENSATION	EXTERNAL
PROTECTION SETTINGS	
1ST WINDING CONN	NA
2ND WINDING CONN	NA
2ND WDG H GROUP	NA
---	---
1ST WDG CT CONN	NA
2ND WDG CT CONN	NA
---	---

NA: Not applicable. (not used when compensation is set to EXTERNAL)

SETTINGS FOR D y 5 CONNECTION

Figure 24 *External match of power transformer connection. (189C4218)*

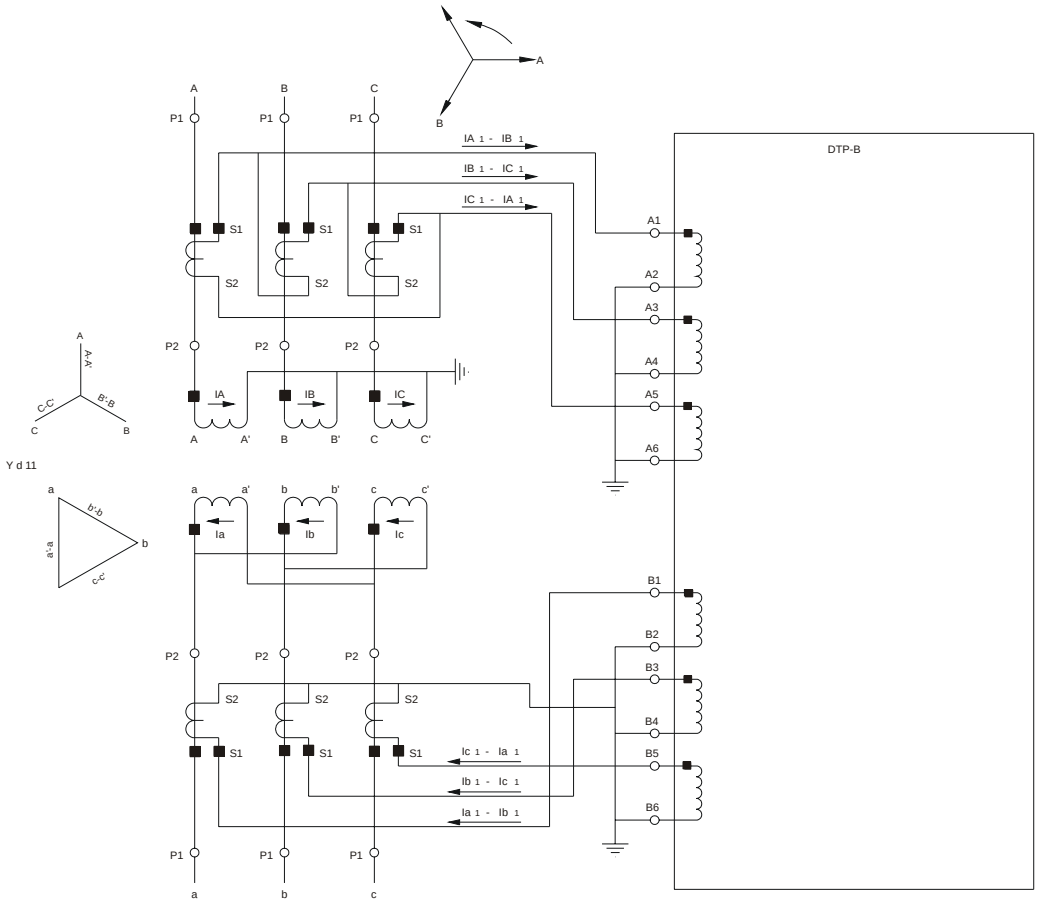

WIRING FOR DTP-B RELAY CURRENT CIRCUITS FOR
Y d 11 CONNECTION POWER TRANSFORMERS

GENERAL SETTINGS	
COMPENSATION	EXTERNAL
PROTECTION SETTINGS	
1 ST WINDING CONN	NA
2 ND WINDING CONN	NA
2 ND WDG H GROUP	NA
---------	---------
1 ST WDG CT CONN	NA
2 ND WDG CT CONN	NA
---------	---------

NA: Not applicable. (not used when compensation is set to EXTERNAL)

SETTINGS FOR Y d 11 CONNECTION

Figure 25. *External match of power transformer connection. (189C4218)*