GE VERNOVA

F60

Feeder Protection System

Instruction Manual

Product version: 7.3x

Publication reference: 1601-0093-AB3

E83849
LISTED
IND.CONT. EQ.
52TL

DISTRIBUTED NETWORK PROTOCOL level 2 dnp PASSED Level Two Conformance Tested

REGISTERED ISO 9001

WORLDWIDE 10 YEAR WARRANTY

Copyright © 2025 GE Vernova. All rights reserved.

GridBeats, Universal Relay, Multilin, MiCOM, S1 Agile, P40 Agile, DS Agile, EnerVista, CyberSentry, HardFiber, FlexLogic, FlexElement, FlexCurve, FlexAnalog, FlexInteger and FlexState are trademarks or registered trademarks of GE Vernova.

The contents of this manual are the property of GE Vernova. This documentation is furnished on license and may not be reproduced in whole or in part without the permission of GE Vernova. The content of this manual is for informational use only and is subject to change without notice.

It is the responsibility of the user for verifying and validating the suitability of all GE Vernova products. This equipment must be used within its design limits. The proper application including configuration and setting of this product to suit the power system assets is the responsibility of the user, who is also required to ensure that all local or regional safety guidelines are adhered to. Incorrect application of this product could risk damage to property/the environment, personal injuries or fatalities and shall be the sole responsibility of the person/entity applying and qualifying the product for use.

The content in this document has been developed to provide guidance to properly install, configure and maintain this product for its intended applications. This guidance is not intended to cover every possible contingency that may arise during commissioning, operation, service, or maintenance activities. Should you encounter any circumstance's not clearly addressed in this document, contact your local GE Vernova service site.

IT IS THE SOLE RESPONSIBILITY OF THE USER TO SECURE THEIR NETWORK AND ASSOCIATED DEVICES AGAINST CYBER SECURITY INTRUSIONS OR ATTACKS. GE VERNOVA AND ITS AFFILIATES ARE NOT LIABLE FOR ANY DAMAGES AND/OR LOSSES ARISING FROM OR RELATED TO SUCH SECURITY INTRUSION OR ATTACKS.

F60 Feeder Protection System

Table of contents

1 INTRODUCTION

1.1 Safety symbols and definitions 1-1
1.1.1 General cautions and warnings 1-1
1.2 For further assistance 1-2

2 PRODUCT DESCRIPTION

2.1 Product description 2-1
2.1.1 Overview 2-1
2.2 Security 2-3
2.3 Order codes 2-7
2.3.1 Order codes with enhanced CT/VT modules 2-7
2.3.2 Order codes with process bus modules 2-11
2.3.3 Replacement modules 2-14
2.4 Signal processing 2-16
2.4.1 UR signal processing 2-16
2.5 Specifications 2-18
2.5.1 Protection elements 2-19
2.5.2 User-programmable elements 2-24
2.5.3 Monitoring 2-26
2.5.4 Metering 2-27
2.5.5 Inputs 2-28
2.5.6 Power supply 2-30
2.5.7 Outputs 2-30
2.5.8 Communication protocols 2-32
2.5.9 Inter-relay communications 2-33
2.5.10 Environmental 2-35
2.5.11 Type tests 2-36
2.5.12 Production tests 2-36
2.5.13 Approvals 2-37
2.5.14 Maintenance 2-37

3 INSTALLATION

3.1 Unpack and inspect 3-1
3.2 Panel cutouts 3-2
3.2.1 Horizontal units 3-2
3.2.2 Vertical units 3-6
3.2.3 Rear terminal layout 3-11

3.3 Wiring 3-13
3.3.1 Typical wiring 3-13
3.3.2 Dielectric strength 3-14
3.3.3 Control power 3-15
3.3.4 CT/VT modules 3-16
3.3.5 Process bus modules 3-19
3.3.6 Contact inputs and outputs 3-20
3.3.7 Transducer inputs and outputs 3-31
3.3.8 RS232 faceplate port 3-33
3.3.9 CPU communication ports 3-33
3.3.10 IRIG-B 3-35
3.4 Direct input and output communications 3-36
3.4.1 Description 3-36
3.4.2 Fiber: LED and ELED transmitters 3-39
3.4.3 Fiber laser transmitters 3-39
3.4.4 G.703 interface 3-40
3.4.5 RS422 interface 3-44
3.4.6 RS422 and fiber interface 3-46
3.4.7 G.703 and fiber interface 3-47
3.4.8 IEEE C37.94 interface 3-47
3.4.9 C37.94SM interface 3-50
3.5 Activate relay 3-53
3.6 Install software 3-54
3.6.1 EnerVista communication overview 3-54
3.6.2 System requirements 3-55
3.6.3 Install software 3-56
3.7 Configure the F60 for software access 3-57
3.7.1 Configure serial communication 3-58
3.7.2 Configure Ethernet communication 3-59
3.7.3 Automatic discovery of UR devices 3-60
3.8 Connect to the F60 3-61
3.8.1 Connect to the F60 in EnerVista 3-61
3.8.2 Use Quick Connect via the front panel RS232 port 3-62
3.8.3 Use Quick Connect via a rear Ethernet port 3-63
3.9 Set up CyberSentry and change default password 3-68

4 INTERFACES

4.1 EnerVista software interface 4-1
4.1.1 Introduction 4-1
4.1.2 Settings files 4-1
4.1.3 Event viewing 4-2
4.1.4 File support 4-3
4.1.5 EnerVista main window 4-3
4.1.6 Settings templates 4-4
4.1.7 Secure and lock FlexLogic equations 4-9
4.1.8 Settings file traceability 4-11
4.2 Front panel interface 4-13
4.2.1 Front panel display 4-13
4.2.2 Front panel keypad 4-13
4.2.3 Menu navigation 4-14
4.2.4 Menu hierarchy 4-14
4.2.5 Changing settings 4-15
4.2.6 Faceplate 4-16
4.2.7 LED indicators 4-18
4.2.8 Custom LED labeling 4-21

4.2.9 Breaker control 4-26
4.2.10 Change passwords 4-27
4.2.11 Invalid password entry 4-28
4.3 Logic diagrams 4-29

5 SETTINGS

5.1 Settings menu 5-1
5.2 Overview 5-4
5.2.1 Introduction to elements 5-4
5.2.2 Introduction to AC sources 5-6
5.3 Product setup 5-7
5.3.1 Security 5-7
5.3.2 Display properties 5-25
5.3.3 Clear relay records 5-27
5.3.4 Communications 5-28
5.3.5 Modbus user map 5-83
5.3.6 Real-time clock 5-83
5.3.7 Fault reports 5-88
5.3.8 Oscillography 5-90
5.3.9 Data logger 5-92
5.3.10 Demand 5-93
5.3.11 User-programmable LEDs 5-95
5.3.12 User-programmable self-tests 5-98
5.3.13 Control pushbuttons 5-99
5.3.14 User-programmable pushbuttons 5-100
5.3.15 Flex state parameters 5-105
5.3.16 User-definable displays 5-106
5.3.17 Direct inputs and outputs 5-108
5.3.18 Teleprotection 5-115
5.3.19 Installation 5-116
5.4 Remote resources 5-116
5.4.1 Remote resources configuration 5-116
5.5 System setup 5-117
5.5.1 AC inputs 5-117
5.5.2 Power system 5-119
5.5.3 Signal sources 5-120
5.5.4 Breakers 5-122
5.5.5 Disconnect switches 5-127
5.5.6 FlexCurves 5-130
5.5.7 Phasor Measurement Unit 5-137
5.6 FlexLogic 5-158
5.6.1 FlexLogic operands 5-158
5.6.2 FlexLogic rules 5-170
5.6.3 FlexLogic evaluation 5-170
5.6.4 FlexLogic example 5-171
5.6.5 FlexLogic equation editor 5-176
5.6.6 FlexLogic timers 5-176
5.6.7 FlexElements 5-176
5.6.8 Non-volatile latches 5-180
5.7 Grouped elements 5-181
5.7.1 Overview 5-181
5.7.2 Setting group 1 5-181
5.7.3 Load encroachment 5-182
5.7.4 Phase current 5-184
5.7.5 Neutral current 5-195
5.7.6 Wattmetric ground fault 5-203

5.7.7 Ground current 5-207
5.7.8 Negative sequence current 5-217
5.7.9 Breaker failure (ANSI 50BF) 5-223
5.7.10 Voltage elements 5-232
5.7.11 Sensitive directional power (ANSI 32) 5-239
5.8 Control elements 5-242
5.8.1 Overview 5-242
5.8.2 Trip bus 5-242
5.8.3 Setting groups 5-244
5.8.4 Selector switch 5-245
5.8.5 Underfrequency (ANSI 81U) 5-252
5.8.6 Overfrequency (ANSI 81O) 5-253
5.8.7 Frequency rate of change (ANSI 81R) 5-254
5.8.8 Synchrocheck (ANSI 25) 5-256
5.8.9 Autoreclose (ANSI 79) 5-259
5.8.10 Digital elements 5-266
5.8.11 Digital counters 5-269
5.9 Monitoring elements 5-271
5.9.1 Cold load pickup 5-297
5.10 Inputs/outputs 5-298
5.10.1 Contact inputs 5-298
5.10.2 Virtual inputs 5-300
5.10.3 Contact outputs 5-301
5.10.4 Virtual outputs 5-305
5.10.5 Resetting 5-305
5.10.6 Direct inputs and outputs 5-305
5.10.7 Teleprotection 5-309
5.11 Transducer inputs/outputs 5-311
5.11.1 DCmA inputs 5-311
5.11.2 RTD inputs 5-312
5.11.3 DCmA outputs 5-313
5.12 Testing 5-316
5.12.1 Test mode function 5-316
5.12.2 Test mode forcing 5-317
5.12.3 Force contact inputs 5-318
5.12.4 Force contact outputs 5-318
5.12.5 Phasor Measurement Unit test values 5-319

6 ACTUAL VALUES

6.1 Actual Values menu 6-1
6.2 Status 6-3
6.2.1 Contact inputs 6-3
6.2.2 Virtual inputs 6-3
6.2.3 RxGOOSE boolean inputs 6-4
6.2.4 RxGOOSE DPS inputs 6-4
6.2.5 Teleprotection inputs 6-4
6.2.6 Contact outputs 6-5
6.2.7 Virtual outputs 6-5
6.2.8 RxGOOSE status 6-5
6.2.9 RxGOOSE statistics 6-6
6.2.10 Autoreclose 6-6
6.2.11 Digital counters 6-6
6.2.12 Selector switches 6-6
6.2.13 Flex States 6-7
6.2.14 Ethernet 6-7
6.2.15 Real time clock synchronizing 6-7

6.2.16 Hi-Z status ... 6-8
6.2.17 Direct inputs ... 6-8
6.2.18 Direct devices status ... 6-9
6.2.19 EGD protocol status ... 6-9
6.2.20 Teleprotection channel tests ... 6-10
6.2.21 Incipient fault detector ... 6-10
6.2.22 Remaining connection status ... 6-10
6.2.23 Parallel Redundancy Protocol (PRP) ... 6-11
6.3 Metering ... 6-12
6.3.1 Metering conventions ... 6-12
6.3.2 Sources ... 6-16
6.3.3 Sensitive directional power ... 6-22
6.3.4 Synchrocheck ... 6-22
6.3.5 Tracking frequency ... 6-23
6.3.6 Frequency rate of change ... 6-23
6.3.7 FlexElements ... 6-23
6.3.8 RxGOOSE analogs ... 6-24
6.3.9 Wattmetric ground fault ... 6-24
6.3.10 Phasor Measurement Unit ... 6-24
6.3.11 PMU aggregator ... 6-25
6.3.12 Restricted ground fault ... 6-25
6.3.13 Transducer inputs and outputs ... 6-25
6.4 Records ... 6-26
6.4.1 Fault reports ... 6-26
6.4.2 Event records ... 6-26
6.4.3 Oscillography ... 6-27
6.4.4 Data logger ... 6-28
6.4.5 Phasor Measurement Unit records ... 6-28
6.4.6 Breaker maintenance ... 6-28
6.4.7 Hi-Z records ... 6-29
6.5 Product information ... 6-29
6.5.1 Model information ... 6-29
6.5.2 Firmware revisions ... 6-30

7 COMMANDS AND TARGETS
7.1 Commands menu ... 7-1
7.1.1 Virtual inputs ... 7-2
7.1.2 Clear records ... 7-2
7.1.3 Set date and time ... 7-3
7.1.4 Relay maintenance ... 7-3
7.1.5 Phasor Measurement Unit one-shot ... 7-4
7.1.6 Security ... 7-6
7.2 Targets menu ... 7-7
7.2.1 Target messages ... 7-7
7.2.2 Relay self-tests ... 7-7

8 COMMISSIONING
8.1 Testing ... 8-1
8.1.1 Testing underfrequency and overfrequency elements ... 8-1

9 THEORY OF OPERATION
9.1 High-impedance (Hi-Z) fault detection ... 9-1
9.1.1 Description ... 9-1
9.1.2 Energy algorithm ... 9-2
9.1.3 Randomness algorithm ... 9-2
9.1.4 Expert Arc Detector algorithm ... 9-2

9.1.5 Spectral Analysis algorithm 9-3
9.1.6 Load Event Detector algorithm 9-3
9.1.7 Load Analysis algorithm 9-3
9.1.8 Load Extraction algorithm 9-3
9.1.9 Arc Burst Pattern Analysis algorithm 9-4
9.1.10 Arcing Suspected algorithm 9-4
9.1.11 Overcurrent disturbance monitoring 9-4
9.1.12 Hi-Z Even Harmonic Restraint algorithm 9-4
9.1.13 Hi-Z Voltage Supervision algorithm 9-4
9.2 Fault locator 9-4
9.2.1 Fault type determination 9-4

10 MAINTENANCE
10.1 General maintenance 10-1
10.1.1 In-service maintenance 10-1
10.1.2 Out-of-service maintenance 10-1
10.1.3 Unscheduled maintenance (system interruption) 10-2
10.2 Back up and restore settings 10-2
10.2.1 Back up settings 10-2
10.2.2 Restore settings 10-3
10.3 Upgrade firmware 10-4
10.4 Upgrade software 10-5
10.5 Replace module 10-6
10.6 Battery 10-7
10.6.1 Replace battery for RH/RL power supply 10-7
10.6.2 Replace battery for SH/SL power supply 10-8
10.6.3 Dispose of battery 10-9
10.7 Clear files and data after uninstall 10-13
10.8 Repairs 10-13
10.9 Storage 10-14
10.10 Disposal 10-14

A FLEXANALOG OPERANDS
A.1 FlexAnalog items A-1

B RADIUS SERVER CONFIGURATION
B.1 RADIUS server configuration B-1

C COMMAND LINE INTERFACE
C.1 Command line interface C-1

D MISCELLANEOUS
D.1 Warranty D-1
D.2 Revision history D-1

ABBREVIATIONS

INDEX

F60 Feeder Protection System

Chapter 1: Introduction

This chapter outlines safety and technical support information.

1.1 Safety symbols and definitions

Before attempting to install or use the device, review all safety indicators in this document to help prevent injury, equipment damage, or downtime.

The following safety and equipment symbols are used in this document.

DANGER **Indicates a hazardous situation which, if not avoided, will result in death or serious injury.**

WARNING **Indicates a hazardous situation which, if not avoided, could result in death or serious injury.**

CAUTION **Indicates a hazardous situation which, if not avoided, could result in minor or moderate injury.**

NOTICE Indicates practices not related to personal injury.

1.1.1 General cautions and warnings

The following general safety precautions and warnings apply.

DANGER **Ensure that all connections to the product are correct so as to avoid accidental risk of shock and/or fire, for example such as can arise from high voltage connected to low voltage terminals.**

Follow the requirements of this manual, including adequate wiring size and type, terminal torque settings, voltage, current magnitudes applied, and adequate isolation/clearance in external wiring from high to low voltage circuits.

Use the device only for its intended purpose and application.

Ensure that all ground paths are uncompromised for safety purposes during device operation and service.

Ensure that the control power applied to the device, the AC current, and voltage input match the ratings specified on the relay nameplate. Do not apply current or voltage in excess of the specified limits.

Only qualified personnel are to operate the device. Such personnel must be thoroughly familiar with all safety cautions and warnings in this manual and with applicable country, regional, utility, and plant safety regulations.

Hazardous voltages can exist in the power supply and at the device connection to current transformers, voltage transformers, control, and test circuit terminals. Make sure all sources of such voltages are isolated prior to attempting work on the device.

Hazardous voltages can exist when opening the secondary circuits of live current transformers. Make sure that current transformer secondary circuits are shorted out before making or removing any connection to the current transformer (CT) input terminals of the device.

For tests with secondary test equipment, ensure that no other sources of voltages or currents are connected to such equipment and that trip and close commands to the circuit breakers or other switching apparatus are isolated, unless this is required by the test procedure and is specified by appropriate utility/plant procedure.

When the device is used to control primary equipment, such as circuit breakers, isolators, and other switching apparatus, all control circuits from the device to the primary equipment must be isolated while personnel are working on or around this primary equipment to prevent any inadvertent command from this device.

Use an external disconnect to isolate the mains voltage supply.

Personal safety can be affected if the product is physically modified by the end user. Modifications to the product outside of recommended wiring configuration, hardware, or programming boundaries is not recommended end-use practice. Product disassembly and repairs are not permitted. All service needs to be conducted by the factory.

⚠CAUTION **LED transmitters are classified as IEC 60825-1 Accessible Emission Limit (AEL) Class 1M. Class 1M devices are considered safe to the unaided eye. Do not view directly with optical instruments.**

NOTICE This product is rated to Class A emissions levels and is to be used in Utility, Substation Industrial environments. Not to be used near electronic devices rated for Class B levels.

1.2 For further assistance

For product support, contact the information and call center as follows:

GE Grid Solutions
650 Markland Street
Markham, Ontario
Canada L6C 0M1
Worldwide telephone: +1 905 927 7070
Europe/Middle East/Africa telephone: +34 94 485 88 54
North America toll-free: 1 800 547 8629
Fax: +1 905 927 5098
Worldwide e-mail: multilin.tech@ge.com
Europe e-mail: multilin.tech.euro@ge.com
Website: http://www.gegridsolutions.com/multilin

F60 Feeder Protection System

Chapter 2: Product description

This chapter outlines the product, order codes, and specifications.

2.1 Product description

2.1.1 Overview

The F60 Feeder Protection System is part of the Universal Relay (UR) series of products. It is a microprocessor-based relay for feeder protection.

Overvoltage and undervoltage protection, overfrequency and underfrequency protection, breaker failure protection, directional current supervision, fault diagnostics, remote terminal unit (RTU), and programmable logic functions are provided. This relay also provides phase, neutral, ground and negative sequence, instantaneous and time overcurrent protection. The time overcurrent function provides multiple curve shapes or FlexCurves™ for optimum co-ordination. Automatic reclosing, synchrocheck, and line fault locator features are also provided. When equipped with a type 8Z current transformer/voltage transformer (CT/VT) module, an element for detecting high impedance faults is provided.

Voltage, current, and power metering are built in as standard features. Current parameters are available as total waveform root mean square (RMS) magnitude, or as fundamental frequency only RMS magnitude and angle (phasor).

Diagnostic features include an event recorder that stores 1024 time-tagged events. The internal clock used for time-tagging can be synchronized with an IRIG-B signal, using the Simple Network Time Protocol (SNTP) over the Ethernet port, or using the Precision Time Protocol (PTP). This precise time stamping allows the sequence of events to be determined throughout the system. Events can also be programmed (via FlexLogic™ equations) to trigger oscillography data capture that can be set to record the measured parameters before and after the event for viewing on a computer. These tools significantly reduce troubleshooting time and simplify report generation in the event of a system fault.

Several options are available for communication. A faceplate RS232 port can be used to connect to a computer to program settings and monitor actual values. The rear RS485 port allows independent access by operating and engineering staff. It can be connected to system computers with baud rates up to 115.2 kbps. All serial ports use the Modbus RTU protocol. The IEC 60870-5-103 protocol is supported on the RS485 interface. IEC 60870-5-103, DNP, and Modbus cannot be enabled simultaneously on this interface. Also only one of the DNP, IEC 60870-5-103, and IEC 60870-5-104 protocols can be enabled at any time on the relay. When the IEC 60870-5-103 protocol is chosen, the RS485 port has a fixed even parity and the baud rate can be either 9.6 kbps or 19.2 kbps. The 100Base-FX or 100Base-TX Ethernet interface provides fast, reliable communications in noisy environments. The Ethernet port supports IEC 61850, IEC 61850-90-5, Modbus/TCP, TFTP, and PTP (according to IEEE Std. 1588-2008 or IEC 61588), and it allows access to the relay via any standard web browser (F60 web pages). The IEC 60870-5-104 protocol is supported on the Ethernet port. The Ethernet port also supports the Parallel Redundancy Protocol (PRP) of IEC 62439-3 (clause 4, 2012) when purchased as an option.

Settings and actual values can be accessed from the front panel or EnerVista software.

The F60 uses flash memory technology that allows field upgrading as new features are added. Firmware and software are upgradable.

The following single-line diagram illustrates the relay functionality using American National Standards Institute (ANSI) device numbers.

2

Table 2-1: ANSI device numbers and functions supported

Device number	Function
25	Synchrocheck
27P	Phase undervoltage
27X	Auxiliary undervoltage
32	Sensitive directional power
32N	Wattmetric zero-sequence directional
49	Thermal overload protection
50BF/50NBF	Breaker failure
50DD	Disturbance detector
50G	Ground instantaneous overcurrent
50N	Neutral instantaneous overcurrent
50P	Phase instantaneous overcurrent
50_2	Negative-sequence instantaneous overcurrent
51G	Ground time overcurrent
51N	Neutral time overcurrent
51P	Phase time overcurrent

Device number	Function
51_2	Negative-sequence time overcurrent
52	AC circuit breaker
59N	Neutral overvoltage
59P	Phase overvoltage
59X	Auxiliary overvoltage
59_2	Negative-sequence overvoltage
67N	Neutral directional overcurrent
67P	Phase directional overcurrent
67_2	Negative-sequence directional overcurrent
79	Automatic recloser
81O	Overfrequency
81R	Rate of change frequency
81U	Underfrequency
87RGF	Restricted ground fault

Figure 2-1: Single-line diagram

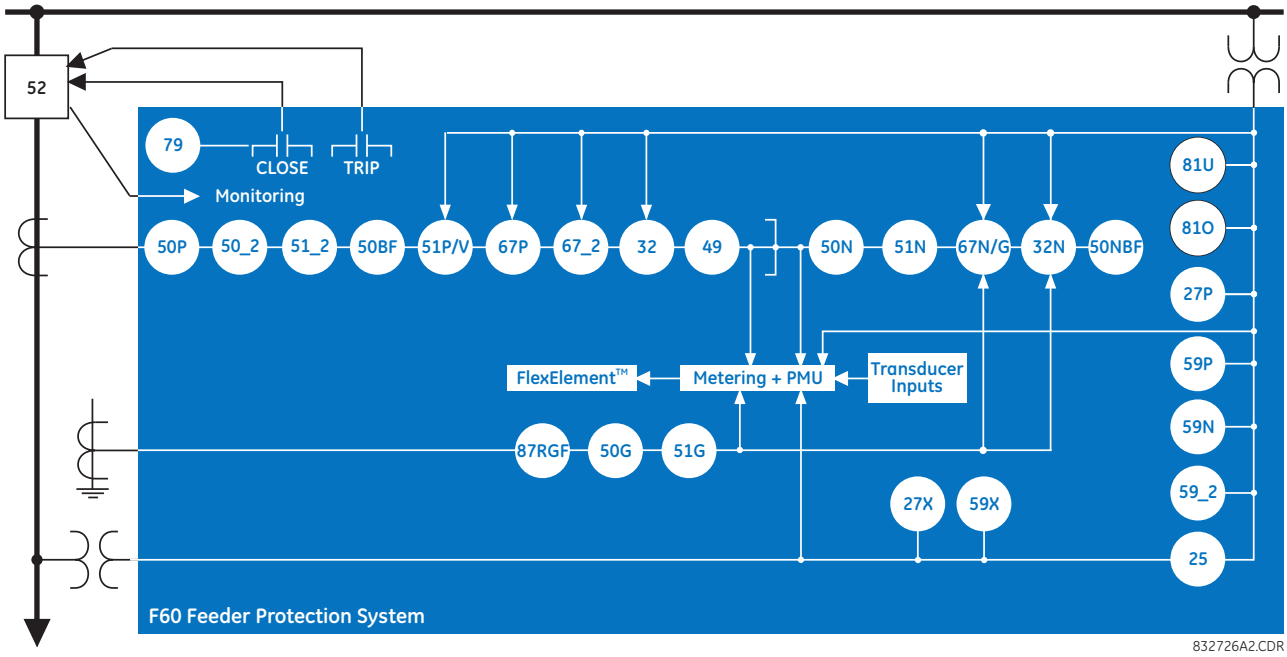

Table 2-2: Other device functions

Function	Function	Function
Breaker arcing current (I^2t)	Disconnect switches	Oscillography
Breaker control	Event recorder	Setting groups (6)
Breaker flashover	Fault detector and fault report	Synchrophasor (PMU)
Breaker restrike	Fault locator	Thermal overload protection
Broken conductor detection	FlexElements™ (8)	Time synchronization over IRIG-B or IEEE 1588
Cold load pickup	FlexLogic equations	Time synchronization over SNTP
Contact inputs (up to 96)	High impedance fault detection (Hi-Z)	Transducer inputs and outputs
Contact outputs (up to 64)	IEC 60870-5-103 communications	User-definable displays
Control pushbuttons	IEC 61850 communications	User-programmable LEDs
CyberSentry™ security	Incipient cable fault detection	User-programmable pushbuttons
Data logger	Load encroachment	User-programmable self-tests
Demand	Metering: current, voltage, power, PF, energy, frequency, harmonics, THD	Virtual inputs (64)
Digital counters (8)	Modbus user map	Virtual outputs (96)
Digital elements (48)	Non-volatile latches	VT fuse failure
Direct inputs and outputs (32)	Non-volatile selector switch	

2.2 Security

The following security features are available:

- Password security — Basic security present by default
- EnerVista security — Role-based access to various EnerVista software screens and configuration elements. The feature is present by default in the EnerVista software.
- CyberSentry security — Advanced security available as a software option. When purchased, the options are automatically enabled, and the default Password security and EnerVista security are disabled.

2.2.0.1 EnerVista security

The EnerVista security management system is a role-based access control (RBAC) system that allows an administrator to manage the privileges of multiple users. This allows for access control of UR devices by multiple personnel within a substation and conforms to the principles of RBAC as defined in ANSI INCITS 359-2004. The EnerVista security management system is disabled by default to allow the administrator direct access to the EnerVista software after installation. It is recommended that security be enabled before placing the device in service.

Basic password or enhanced CyberSentry security applies, depending on purchase.

2.2.0.2 Password security

Password security is a basic security feature present by default.

Two levels of password security are provided: command and setting. Use of a password for each level controls whether users can enter commands and/or change settings.

The F60 supports password entry from a local or remote connection. Local access is defined as any access to settings or commands via the faceplate interface. This includes both keypad entry and the through the faceplate RS232 port. Remote access is defined as any access to settings or commands via any rear communications port. This includes both Ethernet and RS485 connections. Any changes to the local or remote passwords enables this functionality.

When entering a settings or command password via EnerVista or any serial interface, the user must enter the corresponding connection password. If the connection is to the back of the F60, the remote password must be used. If the connection is to the RS232 port of the faceplate, the local password applies.

Password access events are logged in the Event Recorder.

2.2.0.3 CyberSentry security

CyberSentry embedded security is a software option that provides advanced security services. When this option is purchased, the basic password security is disabled automatically.

CyberSentry provides security through the following features:

- An Authentication, Authorization, Accounting (AAA) Remote Authentication Dial-In User Service (RADIUS) client that is centrally managed, enables user attribution, provides accounting of all user activities, and uses secure standards-based strong cryptography for authentication and credential protection
- A Role-Based Access Control (RBAC) system that provides a permission model that allows access to UR device operations and configurations based on specific roles and individual user accounts configured on the AAA server (that is, Administrator, Supervisor, Engineer, Operator, Observer roles)
- Security event reporting through the Syslog protocol for supporting Security Information Event Management (SIEM) systems for centralized cybersecurity monitoring
- Strong encryption of all access and configuration network messages between the EnerVista software and UR devices using the Secure Shell (SSH) protocol, the Advanced Encryption Standard (AES), and 128-bit keys in Galois Counter Mode (GCM) as specified in the U.S. National Security Agency Suite B extension for SSH and approved by the National Institute of Standards and Technology (NIST) FIPS-140-2 standards for cryptographic systems

CyberSentry user roles

CyberSentry user roles (Administrator, Engineer, Operator, Supervisor, Observer) limit the levels of access to various UR device functions. This means that the EnerVista software allows for access to functionality based on the user's logged in role.

Example: Administrative functions can be segmented away from common operator functions, or engineering type access, all of which are defined by separate roles (see figure) so that access of UR devices by multiple personnel within a substation is allowed.

Figure 2-2: CyberSentry user roles

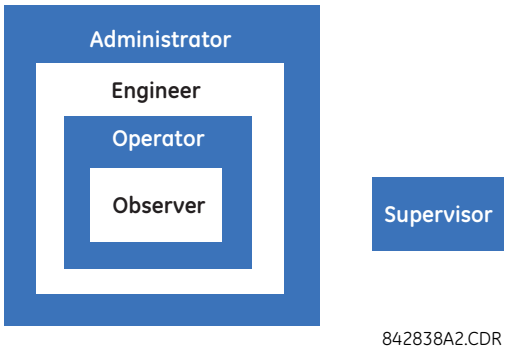

The table lists user roles and their corresponding capabilities.

Table 2-3: Permissions by user role for CyberSentry

Roles	Administrator	Engineer	Operator	Supervisor	Observer
	Complete access	Complete access except for CyberSentry Security	Command menu	Authorizes writing	Default role
Device Definition	R	R	R	R	R
Settings					
|---------- Product Setup					

Roles	Administrator	Engineer	Operator	Supervisor	Observer
|---------- Security (CyberSentry)	RW	R	R	R	R
|---------- Supervisory	See table notes	R	R	See table notes	R
|---------- Display Properties	RW	RW	R	R	R
|---------- Clear Relay Records (settings)	RW	RW	R	R	R
|---------- Communications	RW	RW	R	R	R
|---------- Modbus User Map	RW	RW	R	R	R
|---------- Real Time Clock	RW	RW	R	R	R
|---------- Oscillography	RW	RW	R	R	R
|---------- Data Logger	RW	RW	R	R	R
|---------- Demand	RW	RW	R	R	R
|---------- User-Programmable LEDs	RW	RW	R	R	R
|---------- User-Programmable Self Tests	RW	RW	R	R	R
|---------- Control Pushbuttons	RW	RW	R	R	R
|---------- User-Programmable Pushbuttons	RW	RW	R	R	R
|---------- Flex state Parameters	RW	RW	R	R	R
|---------- User-Definable Displays	RW	RW	R	R	R
|---------- Direct I/O	RW	RW	R	R	R
|---------- Teleprotection	RW	RW	R	R	R
|---------- Installation	RW	RW	R	R	R
|---------- System Setup	RW	RW	R	R	R
|---------- FlexLogic	RW	RW	R	R	R
|---------- Grouped Elements	RW	RW	R	R	R
|---------- Control Elements	RW	RW	R	R	R
|---------- Inputs / Outputs	RW	RW	R	R	R
|---------- Contact Inputs	RW	RW	R	R	R
|---------- Contact Input threshold	RW	RW	R	R	R
|---------- Virtual Inputs	RW	RW	R	R	R
|---------- Contact Outputs	RW	RW	R	R	R
|---------- Virtual Outputs	RW	RW	R	R	R
|---------- Resetting	RW	RW	R	R	R
|---------- Direct Inputs	RW	RW	R	R	R
|---------- Direct Outputs	RW	RW	R	R	R
|---------- Teleprotection	RW	RW	R	R	R
|---------- Direct Analogs	RW	RW	R	R	R
|---------- Direct Integers	RW	RW	R	R	R
|---------- Transducer I/O	RW	RW	R	R	R
|---------- Testing	RW	RW	R	R	R
|---------- Front Panel Labels Designer	NA	NA	NA	NA	NA
|---------- Protection Summary	NA	NA	NA	NA	NA
Commands	RW	RW	RW	R	R

Roles	Administrator	Engineer	Operator	Supervisor	Observer
|---------- Virtual Inputs	RW	RW	RW	R	R
|---------- Clear Records	RW	RW	RW	R	R
|---------- Set Date and Time	RW	RW	RW	R	R
User Displays	R	R	R	R	R
Targets	R	R	R	R	R
Actual Values	R	R	R	R	R
|---------- Front panel labels designer	R	R	R	R	R
|---------- Status	R	R	R	R	R
|---------- Metering	R	R	R	R	R
|---------- Transducer I/O	R	R	R	R	R
|---------- Records	R	R	R	R	R
|---------- Product Info	R	R	R	R	R
Maintenance	RW	RW	R	R	R
|---------- Modbus analyzer	NA	NA	NA	NA	NA
|---------- Change front panel	RW	RW	RW	R	R
|---------- Update firmware	Yes	No	No	No	No
|---------- Retrieve file	Yes	No	No	No	No

Table Notes:

RW = read and write access

R = read access

Supervisor = RW (default), Administrator = R (default), Administrator = RW (only if Supervisor role is disabled)

NA = the permission is not enforced by CyberSentry security

CyberSentry user authentication

The following types of authentication are supported by CyberSentry to access the UR device:

- Device Authentication (local UR device authenticates)
- Server Authentication (RADIUS server authenticates)

The EnerVista software allows access to functionality that is determined by the user role, which comes either from the local UR device or the RADIUS server.

The EnerVista software has a device authentication option on the login screen for accessing the UR device. When the "Device" button is selected, the UR uses its local authentication database and not the RADIUS server to authenticate the user. In this case, it uses its built-in roles (Administrator, Engineer, Supervisor, Observer, Operator, or Administrator and Supervisor when Device Authentication is disabled) as login names and the associated passwords are stored on the UR device. As such, when using the local accounts, access is not user-attributable.

In cases where user-attributable access is required especially to facilitate auditable processes for compliance reasons, use RADIUS authentication only.

When the "Server" Authentication Type option is selected, the UR uses the RADIUS server and not its local authentication database to authenticate the user.

No password or security information is displayed in plain text by the EnerVista software or UR device, nor is such information ever transmitted without cryptographic protection.

CyberSentry server authentication

The UR has been designed to direct automatically the authentication requests based on user names. In this respect, local account names on the UR are considered as reserved and not used on a RADIUS server.

The UR detects automatically whether an authentication request is to be handled remotely or locally. As there are five local accounts possible on the UR, if the user ID credential does not match one of the five local accounts, the UR forwards automatically the request to a RADIUS server when one is provided.

If a RADIUS server is provided, but is unreachable over the network, server authentication requests are denied. In this situation, use local UR accounts to gain access to the UR system.

2.3 Order codes

The order code is on the product label and indicates the product options applicable.

The F60 is available as a 19-inch rack horizontal mount or reduced-size (¾) vertical unit. It consists of the following modules: power supply, CPU, CT/VT, contact input and output, transducer input and output, and inter-relay communications. Module options are specified at the time of ordering.

The order codes shown here are subject to change without notice. See the web page for the product for the latest options.

The order code depends on the mounting option (horizontal or vertical) and the type of CT/VT modules (enhanced diagnostic CT/VT modules or HardFiber™ process bus module). The process bus module provides an interface to HardFiber Bricks.

2.3.1 Order codes with enhanced CT/VT modules

Table 2-4: F60 order codes for horizontal units

	F60 - * ** - * * - F ** - H ** - M ** - P ** - U ** - W/X **		Full Size Horizontal Mount
BASE UNIT	F60	|	Base Unit
CPU		T |	RS485 and Three Multi-mode fiber 100Base-FX (SFP with LC)
		U |	RS485 and Two Multi-mode fiber 100Base-FX (SFP with LC), One 10/100Base-TX (SFP with RJ45)
		V |	RS485 and Three 10/100Base-TX (SFP with RJ45)
SOFTWARE		00 |	No Software Options
		01 |	Ethernet Global Data (EGD)
		03 |	IEC 61850
		04 |	Ethernet Global Data (EGD) and IEC 61850
		06 |	Phasor measurement unit (PMU)
		07 |	Phasor measurement unit (PMU) and IEC 61850
		A0 |	CyberSentry Lvl 1
		A1 |	CyberSentry Lvl 1 and Ethernet Global Data (EGD)
		A3 |	CyberSentry Lvl 1 and IEC 61850
		A4 |	CyberSentry Lvl 1 and IEC 61850 and Ethernet Global Data (EGD)
		A6 |	CyberSentry Lvl 1 and phasor measurement unit (PMU)
		A7 |	CyberSentry Lvl 1 and IEC 61850 and phasor measurement unit (PMU)
		B0 |	IEEE 1588
		B1 |	IEEE 1588 and Ethernet Global Data (EGD)
		B3 |	IEEE 1588 and IEC 61850
		B4 |	IEEE 1588 and IEC 61850 and Ethernet Global Data (EGD)
		B6 |	IEEE 1588 and phasor measurement unit (PMU)
		B7 |	IEEE 1588 and IEC 61850 and phasor measurement unit (PMU)
		C0 |	Parallel Redundancy Protocol (PRP)
		C1 |	PRP and Ethernet Global Data
		C3 |	PRP and IEC 61850
		C4 |	PRP, Ethernet Global Data, and IEC 61850
		C6 |	PRP and PMU
		C7 |	PRP, IEC 61850, and PMU
		D0 |	IEEE 1588 and CyberSentry Lvl 1
		D1 |	IEEE 1588 and CyberSentry Lvl 1 and Ethernet Global Data (EGD)
		D3 |	IEEE 1588 and CyberSentry Lvl 1 and IEC 61850
		D4 |	IEEE 1588 and CyberSentry Lvl 1 and IEC 61850 and Ethernet Global Data (EGD)
		D6 |	IEEE 1588 and CyberSentry Lvl 1 and phasor measurement unit (PMU)
		D7 |	IEEE 1588 and CyberSentry Lvl 1 and IEC 61850 and phasor measurement unit (PMU)
		E0 |	IEEE 1588 and PRP
		E1 |	IEEE 1588, PRP, and Ethernet Global Dada
		E3 |	IEEE 1588, PRP, and IEC 61850
		E4 |	IEEE 1588, PRP, Ethernet Global Data, and IEC 61850
		E6 |	IEEE 1588, PRP, and PMU
		E7 |	IEEE 1588, PRP, IEC 61850, and PMU
		F0 |	PRP and CyberSentry Lvl1
		F1 |	PRP, CyberSentry Lvl1, and Ethernet Global Data
		F3 |	PRP, CyberSentry Lvl 1, and IEC 61850
		F4 |	PRP, CyberSentry Lvl 1, Ethernet Global Data, and IEC 61850
		F6 |	PRP, CyberSentry Lvl 1, and PMU
		F7 |	PRP, CyberSentry Lvl 1, IEC 61850, and PMU
		G0 |	IEEE 1588, PRP, and CyberSentry Lvl 1
		G1 |	IEEE 1588, PRP, CyberSentry Lvl 1, Ethernet Global Data
		G3 |	IEEE 1588, PRP, CyberSentry Lvl 1, and IEC 61850
		G4 |	IEEE 1588, PRP, CyberSentry Lvl 1, Ethernet Global Data, and IEC 61850
		G6 |	IEEE 1588, PRP, CyberSentry Lvl 1, and PMU
		G7 |	IEEE 1588, PRP, CyberSentry Lvl 1, IEC 61850, and PMU
		J0 |	IEC 60870-5-103
		J1 |	IEC 60870-5-103 + EGD
		J3 |	IEC 60870-5-103 + IEC 61850
		J4 |	IEC 60870-5-103 + EGD + IEC 61850

2

F60 - * ** - * * * - F ** - H ** - M ** - P ** - U ** - W/X **												
	J6											IEC 60870-5-103 + PMU
	J7											IEC 60870-5-103 + IEC 61850 + PMU
	K0											IEEE 1588 + PRP + IEC 60870-5-103
	K1											IEEE 1588 + PRP + IEC 60870-5-103 + EGD
	K3											IEEE 1588 + PRP + IEC 60870-5-103 + IEC 61850
	K4											IEEE 1588 + PRP + IEC 60870-5-103 + EGD + IEC 61850
	K6											IEEE 1588 + PRP + IEC 60870-5-103 + PMU
	K7											IEEE 1588 + PRP + IEC 60870-5-103 + IEC 61850 + PMU
	L0											IEC 60870-5-103 + IEEE1588 + PRP + CyberSentry Lvl 1
	L1											IEC 60870-5-103 + IEEE1588 + PRP + CyberSentry Lvl 1 + EGD
	L3											IEC 60870-5-103 + IEEE1588 + PRP + CyberSentry Lvl 1 + IEC 61850
	L4											IEC 60870-5-103 + IEEE1588 + PRP + CyberSentry Lvl 1 + EGD + IEC 61850
	L6											IEC 60870-5-103 + IEEE1588 + PRP + CyberSentry Lvl 1 + PMU
	L7											IEC 60870-5-103 + IEEE1588 + PRP + CyberSentry Lvl 1 + IEC 61850 + PMU
	M0											IEC 61850 + PMU + 61850-90-5
	M7											CyberSentry UR Lvl 1 + IEC 61850 + PMU + 61850-90-5
	MD											IEEE 1588 + IEC 61850 + PMU + 61850-90-5
	MJ											PRP + IEC 61850 + PMU + 61850-90-5
	MP											IEEE 1588 + CyberSentry UR Lvl 1 + IEC 61850 + PMU + 61850-90-5
	MV											IEEE 1588 + PRP + IEC 61850 + PMU + 61850-90-5
	N1											PRP + CyberSentry UR Lvl 1 + IEC 61850 + PMU + 61850-90-5
	N7											IEEE 1588 + PRP + CyberSentry UR Lvl 1 + IEC 61850 + PMU + 61850-90-5
	ND											IEC 60870-5-103 + IEC 61850 + PMU + 61850-90-5
	NJ											IEEE 1588 + PRP + IEC 60870-5-103 + IEC 61850 + PMU + 61850-90-5
	NP											IEC 60870-5-103 + IEEE 1588 + PRP + CyberSentry UR Lvl 1 + IEC 61850 + PMU + 61850-90-5
MOUNT/ COATING		H										Horizontal (19" rack) - Standard
		A										Horizontal (19" rack) - With harsh environmental coating
FACEPLATE/ DISPLAY			C									English display
			D									French display
			R									Russian display
			P									English display with 4 small and 12 large programmable pushbuttons
			G									French display with 4 small and 12 large programmable pushbuttons
			S									Russian display with 4 small and 12 large programmable pushbuttons
			K									Enhanced front panel with English display
			M									Enhanced front panel with French display
			Q									Enhanced front panel with Russian display
			U									Enhanced front panel with Chinese display
			L									Enhanced front panel with English display and user-programmable pushbuttons
			N									Enhanced front panel with French display and user-programmable pushbuttons
			T									Enhanced front panel with Russian display and user-programmable pushbuttons
			V									Enhanced front panel with Chinese display and user-programmable pushbuttons
			W									Enhanced front panel with Turkish display
			Y									Enhanced front panel with Turkish display and user-programmable pushbuttons
			I									Enhanced front panel with German display
			J									Enhanced front panel with German display and user-programmable pushbuttons
POWER SUPPLY (redundant supply must be same type as main supply)				H								125 / 250 V AC/DC power supply
				H							RH	125 / 250 V AC/DC with redundant 125 / 250 V AC/DC power supply
				L								24 to 48 V (DC only) power supply
				L							RL	24 to 48 V (DC only) with redundant 24 to 48 V DC power supply
CT/VT DSP (8L, 8M, 8N, 8R require all DSPs to be enhanced diagnostic)						XX			XX			No DSP module (slots M and U only)
					8L	8L						Standard 4CT/4VT with enhanced diagnostics
					8M	8M						Sensitive Ground 4CT/4VT with enhanced diagnostics
					8N	8N						Standard 8CT with enhanced diagnostics
					8R	8R						Sensitive Ground 8CT with enhanced diagnostics
						8Z *						Hi-Z 4CT (required for high-impedance fault detection element)
CONTACT INPUTS/OUTPUTS					XX	XX	XX	XX	XX		XX	No Module
					4A	4A	4A	4A	4A		4A	4 Solid-State (no monitoring) MOSFET outputs
					4B	4B	4B	4B	4B		4B	4 Solid-State (voltage with optional current) MOSFET outputs
					4C	4C	4C	4C	4C		4C	4 Solid-State (current with optional voltage) MOSFET outputs
					4D	4D	4D	4D	4D		4D	16 Contact inputs with Auto-Burnishing (maximum of three modules within a case)
					4L	4L	4L	4L	4L		4L	14 Form-A (no monitoring) Latching outputs
					67	67	67	67	67		67	8 Form-A (no monitoring) outputs
					6A	6A	6A	6A	6A		6A	2 Form-A (voltage with optional current) and 2 Form-C outputs, 8 contact inputs
					6B	6B	6B	6B	6B		6B	2 Form-A (voltage with optional current) and 4 Form-C outputs, 4 contact inputs
					6C	6C	6C	6C	6C		6C	8 Form-C outputs
					6D	6D	6D	6D	6D		6D	16 Contact inputs
					6E	6E	6E	6E	6E		6E	4 Form-C outputs, 8 contact inputs
					6F	6F	6F	6F	6F		6F	8 Fast Form-C outputs
					6G	6G	6G	6G	6G		6G	4 Form-A (voltage with optional current) outputs, 8 contact inputs
					6H	6H	6H	6K	6H		6H	6 Form-A (voltage with optional current) outputs, 4 contact inputs
					6K	6K	6K	6L	6K		6K	4 Form-C and 4 Fast Form-C outputs
					6L	6L	6L	6M	6L		6L	2 Form-A (current with optional voltage) and 2 Form-C outputs, 8 contact inputs
					6M	6M	6M	6N	6M		6M	2 Form-A (current with optional voltage) and 4 Form-C outputs, 4 contact inputs
					6N	6N	6N	6P	6N		6N	4 Form-A (current with optional voltage) outputs, 8 contact inputs
					6P	6P	6P	6R	6P		6P	6 Form-A (current with optional voltage) outputs, 4 contact inputs
					6R	6R	6R	6S	6R		6R	2 Form-A (no monitoring) and 2 Form-C outputs, 8 contact inputs
					6S	6S	6S	6T	6S		6S	2 Form-A (no monitoring) and 4 Form-C outputs, 4 contact inputs
					6T	6T	6T	6U	6T		6T	4 Form-A (no monitoring) outputs, 8 contact inputs
					6U	6U	6U	6V	6U		6U	6 Form-A (no monitoring) outputs, 4 contact inputs
					6V	6V	6V		6V		6V	2 Form-A outputs, 1 Form-C output, 1 Form-A latching output, 8 contact inputs
TRANSDUCER INPUTS/OUTPUTS (select a maximum of 3 per unit)					5A	5A	5A	5A	5A		5A	4 DCmA inputs, 4 DCmA outputs (only one 5A or 5D module is allowed)
					5C	5C	5C	5C	5C		5C	8 RTD inputs
					5D	5D	5D	5D	5D		5D	4 RTD inputs, 4 DCmA outputs (only one 5A or 5D module is allowed)
					5E	5E	5E	5E	5E		5E	4 RTD inputs, 4 DCmA inputs
					5F	5F	5F	5F	5F		5F	8 DCmA inputs
INTER-RELAY COMMUNICATIONS (select a maximum of 1 per unit)								2A	2A		2A	C37.94SM, 1300 nm single-mode, ELED, 1 channel single-mode
								2B	2B		2B	C37.94SM, 1300 nm single-mode, ELED, 2 channel single-mode
								2H	2H		2H	IEEE C37.94, 820 nm, 128 kbps, multimode, LED, 2 Channels
								2I	2I		2I	Channel 1 - IEEE C37.94, MM, 64/128 kbps; Channel 2 - 1300 nm, single-mode, Laser
								2J	2J		2J	Channel 1 - IEEE C37.94, MM, 64/128 kbps; Channel 2 - 1550 nm, single-mode, Laser
								72	72		72	1550 nm, single-mode, Laser, 1 Channel
								73	73		73	1550 nm, single-mode, Laser, 2 Channel
								76	76		76	IEEE C37.94, 820 nm, 64 kbps, multimode, LED, 1 Channel
								77	77		77	IEEE C37.94, 820 nm, 64 kbps, multimode, LED, 2 Channels
								7A	7A		7A	820 nm, multimode, LED, 1 Channel
								7B	7B		7B	1300 nm, multimode, LED, 1 Channel
								7C	7C		7C	1300 nm, single-mode, ELED, 1 Channel
								7D	7D		7D	1300 nm, single-mode, Laser, 1 Channel
								7F	7F		7F	Channel 1 - G.703; Channel 2 - 1300 nm, multimode

	F60 - * ** - * * * - F ** - H ** - M ** - P ** - U ** - W/X **		Full Size Horizontal Mount
	7G	7G	Channel 1 - G.703; Channel 2 - 1300 nm, single-mode ELED
	7H	7H	820 nm, multimode, LED, 2 Channels
	7I	7I	1300 nm, multimode, LED, 2 Channels
	7J	7J	1300 nm, single-mode, ELED, 2 Channels
	7K	7K	1300 nm, single-mode, Laser, 2 Channels
	7M	7M	Channel 1 - RS422; Channel 2 - 1300 nm, multimode, LED
	7N	7N	Channel 1 - RS422; Channel 2 - 1300 nm, single-mode, ELED
	7P	7P	Channel 1 - RS422; Channel 2 - 1300 nm, single-mode, Laser
	7Q	7Q	Channel 1 - G.703; Channel 2 - 1300 nm, single-mode Laser
	7R	7R	G.703, 1 Channel
	7S	7S	G.703, 2 Channels
	7T	7T	RS422, 1 Channel
	7W	7W	RS422, 2 Channels

* When an 8Z module is ordered, slot F must have an 8L module. When 8Z is used alongside a CT/VT module with enhanced diagnostics, enhanced diagnostics is not enabled because 8Z does not offer enhanced diagnostics.

2

Table 2-5: F60 order codes for reduced-size vertical units

	F60 - * ** - * * * - F ** - H ** - M ** - P/R **	Reduced Size Vertical Mount (see note regarding P/R slot below)
BASE UNIT	F60	Base Unit
CPU	T	RS485 and Three Multi-mode fiber 100Base-FX (SFP with LC)
	U	RS485 and Two Multi-mode fiber 100Base-FX (SFP with LC), One 10/100Base-TX (SFP with RJ45)
	V	RS485 and Three 10/100Base-TX (SFP with RJ45)
SOFTWARE	00	No Software Options
	01	Ethernet Global Data (EGD)
	03	IEC 61850
	04	Ethernet Global Data (EGD) and IEC 61850
	06	Phasor measurement unit (PMU)
	07	Phasor measurement unit (PMU) and IEC 61850
	A0	CyberSentry Lvl 1
	A1	CyberSentry Lvl 1 and Ethernet Global Data (EGD)
	A3	CyberSentry Lvl 1 and IEC 61850
	A4	CyberSentry Lvl 1 and IEC 61850 and Ethernet Global Data (EGD)
	A6	CyberSentry Lvl 1 and phasor measurement unit (PMU)
	A7	CyberSentry Lvl 1 and IEC 61850 and phasor measurement unit (PMU)
	B0	IEEE 1588
	B1	IEEE 1588 and Ethernet Global Data (EGD)
	B3	IEEE 1588 and IEC 61850
	B4	IEEE 1588 and IEC 61850 and Ethernet Global Data (EGD)
	B6	IEEE 1588 and phasor measurement unit (PMU)
	B7	IEEE 1588 and IEC 61850 and phasor measurement unit (PMU)
	C0	Parallel Redundancy Protocol (PRP)
	C1	PRP and Ethernet Global Data
	C3	PRP and IEC 61850
	C4	PRP, Ethernet Global Data, and IEC 61850
	C6	PRP and PMU
	C7	PRP, IEC 61850, and PMU
	D0	IEEE 1588 and CyberSentry Lvl 1
	D1	IEEE 1588 and CyberSentry Lvl 1 and Ethernet Global Data (EGD)
	D3	IEEE 1588 and CyberSentry Lvl 1 and IEC 61850
	D4	IEEE 1588 and CyberSentry Lvl 1 and IEC 61850 and Ethernet Global Data (EGD)
	D6	IEEE 1588 and CyberSentry Lvl 1 and phasor measurement unit (PMU)
	D7	IEEE 1588 and CyberSentry Lvl 1 and IEC 61850 and phasor measurement unit (PMU)
	E0	IEEE 1588 and PRP
	E1	IEEE 1588, PRP, and Ethernet Global Dada
	E3	IEEE 1588, PRP, and IEC 61850
	E4	IEEE 1588, PRP, Ethernet Global Data, and IEC 61850
	E6	IEEE 1588, PRP, and PMU
	E7	IEEE 1588, PRP, IEC 61850, and PMU
	F0	PRP and CyberSentry Lvl1
	F1	PRP, CyberSentry Lvl1, and Ethernet Global Data
	F3	PRP, CyberSentry Lvl 1, and IEC 61850
	F4	PRP, CyberSentry Lvl 1, Ethernet Global Data, and IEC 61850
	F6	PRP, CyberSentry Lvl 1, and PMU
	F7	PRP, CyberSentry Lvl 1, IEC 61850, and PMU
	G0	IEEE 1588, PRP, and CyberSentry Lvl 1
	G1	IEEE 1588, PRP, CyberSentry Lvl 1, Ethernet Global Data
	G3	IEEE 1588, PRP, CyberSentry Lvl 1, and IEC 61850
	G4	IEEE 1588, PRP, CyberSentry Lvl 1, Ethernet Global Data, and IEC 61850
	G6	IEEE 1588, PRP, CyberSentry Lvl 1, and PMU
	G7	IEEE 1588, PRP, CyberSentry Lvl 1, IEC 61850, and PMU
	J0	IEC 60870-5-103
	J1	IEC 60870-5-103 + EGD
	J3	IEC 60870-5-103 + IEC 61850
	J4	IEC 60870-5-103 + EGD + IEC 61850
	J6	IEC 60870-5-103 + PMU
	J7	IEC 60870-5-103 + IEC 61850 + PMU
	K0	IEEE 1588 + PRP + IEC 60870-5-103
	K1	IEEE 1588 + PRP + IEC 60870-5-103 + EGD
	K3	IEEE 1588 + PRP + IEC 60870-5-103 + IEC 61850
	K4	IEEE 1588 + PRP + IEC 60870-5-103 + EGD + IEC 61850
	K6	IEEE 1588 + PRP + IEC 60870-5-103 + PMU
	K7	IEEE 1588 + PRP + IEC 60870-5-103 + IEC 61850 + PMU
	L0	IEC 60870-5-103 + IEEE1588 + PRP + CyberSentry Lvl 1
	L1	IEC 60870-5-103 + IEEE1588 + PRP + CyberSentry Lvl 1 + EGD
	L3	IEC 60870-5-103 + IEEE1588 + PRP + CyberSentry Lvl 1 + IEC 61850
	L4	IEC 60870-5-103 + IEEE1588 + PRP + CyberSentry Lvl 1 + EGD + IEC 61850
	L6	IEC 60870-5-103 + IEEE1588 + PRP + CyberSentry Lvl 1 + PMU
	L7	IEC 60870-5-103 + IEEE1588 + PRP + CyberSentry Lvl 1 + IEC 61850 + PMU
	M0	IEC 61850 + PMU + 61850-90-5
	M7	CyberSentry UR Lvl 1 + IEC 61850 + PMU + 61850-90-5
	MD	IEEE 1588 + IEC 61850 + PMU + 61850-90-5
	MJ	PRP + IEC 61850 + PMU + 61850-90-5
	MP	IEEE 1588 + CyberSentry UR Lvl 1 + IEC 61850 + PMU + 61850-90-5
	MV	IEEE 1588 + PRP + IEC 61850 + PMU + 61850-90-5
	N1	PRP + CyberSentry UR Lvl 1 + IEC 61850 + PMU + 61850-90-5
	N7	IEEE 1588 + PRP + CyberSentry UR Lvl 1 + IEC 61850 + PMU + 61850-90-5
	ND	IEC 60870-5-103 + IEC 61850 + PMU + 61850-90-5
	NJ	IEEE 1588 + PRP + IEC 60870-5-103 + IEC 61850 + PMU + 61850-90-5

F60 - * ** - * * * - F ** - H ** - M ** - P/R **								Reduced Size Vertical Mount (see note regarding P/R slot below)
NP								IEC 60870-5-103 + IEEE 1588 + PRP + CyberSentry UR Lvl 1 + IEC 61850 + PMU + 61850-90-5
MOUNT/ COATING	V							Vertical (3/4 rack) - Standard
	B							Vertical (3/4 rack) - With harsh environmental coating
FACEPLATE/ DISPLAY		F						English display
		K						Enhanced front panel with English display
		M						Enhanced front panel with French display
		Q						Enhanced front panel with Russian display
		U						Enhanced front panel with Chinese display
		L						Enhanced front panel with English display and user-programmable pushbuttons
		N						Enhanced front panel with French display and user-programmable pushbuttons
		T						Enhanced front panel with Russian display and user-programmable pushbuttons
		V						Enhanced front panel with Chinese display and user-programmable pushbuttons
		W						Enhanced front panel with Turkish display
		Y						Enhanced front panel with Turkish display and user-programmable pushbuttons
		I						Enhanced front panel with German display
		J						Enhanced front panel with German display and user-programmable pushbuttons
POWER SUPPLY			H					125 / 250 V AC/DC power supply
			L					24 to 48 V (DC only) power supply
CT/VT DSP (8L, 8M, 8N, 8R require all DSPs to be enhanced diagnostic)				XX		XX		No DSP module (slots F and M only)
				8L		8L		Standard 4CT/4VT with enhanced diagnostics
				8M		8M		Sensitive Ground 4CT/4VT with enhanced diagnostics
				8N		8N		Standard 8CT with enhanced diagnostics
				8R		8R		Sensitive Ground 8CT with enhanced diagnostics
						8Z *		Hi-Z 4CT (required for high-impedance fault detection element)
CONTACT INPUTS/OUTPUTS					XX	XX	XX	No Module
					4A	4A	4A	4 Solid-State (no monitoring) MOSFET outputs
					4B	4B	4B	4 Solid-State (voltage with optional current) MOSFET outputs
					4C	4C	4C	4 Solid-State (current with optional voltage) MOSFET outputs
					4D	4D	4D	16 Contact inputs with Auto-Burnishing (maximum of three modules within a case)
					4L	4L	4L	14 Form-A (no monitoring) Latching outputs
					67	67	67	8 Form-A (no monitoring) outputs
					6A	6A	6A	2 Form-A (voltage with optional current) and 2 Form-C outputs, 8 contact inputs
					6B	6B	6B	2 Form-A (voltage with optional current) and 4 Form-C outputs, 4 contact inputs
					6C	6C	6C	8 Form-C outputs
					6D	6D	6D	16 Contact inputs
					6E	6E	6E	4 Form-C outputs, 8 contact inputs
					6F	6F	6F	8 Fast Form-C outputs
					6G	6G	6G	4 Form-A (voltage with optional current) outputs, 8 contact inputs
					6H	6H	6H	6 Form-A (voltage with optional current) outputs, 4 contact inputs
					6K	6K	6K	4 Form-C and 4 Fast Form-C outputs
					6L	6L	6L	2 Form-A (current with optional voltage) and 2 Form-C outputs, 8 contact inputs
					6M	6M	6M	2 Form-A (current with optional voltage) and 4 Form-C outputs, 4 contact inputs
					6N	6N	6N	4 Form-A (current with optional voltage) outputs, 8 contact inputs
					6P	6P	6P	6 Form-A (current with optional voltage) outputs, 4 contact inputs
					6R	6R	6R	2 Form-A (no monitoring) and 2 Form-C outputs, 8 contact inputs
					6S	6S	6S	2 Form-A (no monitoring) and 4 Form-C outputs, 4 contact inputs
					6T	6T	6T	4 Form-A (no monitoring) outputs, 8 contact inputs
					6U	6U	6U	6 Form-A (no monitoring) outputs, 4 contact inputs
					6V	6V	6V	2 Form-A outputs, 1 Form-C output, 2 Form-A (no monitoring) latching outputs, 8 contact inputs
TRANSDUCER INPUTS/OUTPUTS (select a maximum of 3 per unit)					5A	5A	5A	4 DCmA inputs, 4 DCmA outputs (only one 5A or 5D module is allowed)
					5C	5C	5C	8 RTD inputs
					5D	5D	5D	4 RTD inputs, 4 DCmA outputs (only one 5A or 5D module is allowed)
					5E	5E	5E	4 RTD inputs, 4 DCmA inputs
					5F	5F	5F	8 DCmA inputs
INTER-RELAY COMMUNICATIONS (select a maximum of 1 per unit) For the last module, slot P is used for digital and transducer input/output modules; slot R is used for inter-relay communications modules.							2A	C37.94SM, 1300 nm single-mode, ELED, 1 channel single-mode
							2B	C37.94SM, 1300 nm single-mode, ELED, 2 channel single-mode
							2H	IEEE C37.94, 820 nm, 128 kbps, multimode, LED, 2 Channels
							2I	Channel 1 - IEEE C37.94, MM, 64/128 kbps; Channel 2 - 1300 nm, single-mode, Laser
							2J	Channel 1 - IEEE C37.94, MM, 64/128 kbps; Channel 2 - 1550 nm, single-mode, Laser
							72	1550 nm, single-mode, Laser, 1 Channel
							73	1550 nm, single-mode, Laser, 2 Channel
							76	IEEE C37.94, 820 nm, 64 kbps, multimode, LED, 1 Channel
							77	IEEE C37.94, 820 nm, 64 kbps, multimode, LED, 2 Channels
							7A	820 nm, multimode, LED, 1 Channel
							7B	1300 nm, multimode, LED, 1 Channel
							7C	1300 nm, single-mode, ELED, 1 Channel
							7D	1300 nm, single-mode, Laser, 1 Channel
							7F	Channel 1 - G.703; Channel 2 - 1300 nm, multimode
							7G	Channel 1 - G.703; Channel 2 - 1300 nm, single-mode ELED
							7H	820 nm, multimode, LED, 2 Channels
							7I	1300 nm, multimode, LED, 2 Channels
							7J	1300 nm, single-mode, ELED, 2 Channels
							7K	1300 nm, single-mode, Laser, 2 Channels
							7M	Channel 1 - RS422; Channel 2 - 1300 nm, multimode, LED
							7N	Channel 1 - RS422; Channel 2 - 1300 nm, single-mode, ELED
							7P	Channel 1 - RS422; Channel 2 - 1300 nm, single-mode, Laser
							7Q	Channel 1 - G.703; Channel 2 - 1300 nm, single-mode Laser
							7R	G.703, 1 Channel
							7S	G.703, 2 Channels
							7T	RS422, 1 Channel
							7W	RS422, 2 Channels

* When an 8Z module is ordered, slot F must have an 8L module. When 8Z is used alongside a CT/VT module with enhanced diagnostics, enhanced diagnostics is not enabled because 8Z does not offer enhanced diagnostics.

2.3.2 Order codes with process bus modules

Table 2-6: F60 order codes for horizontal units with process bus

	F60 - * ** - * * * - F ** - H ** - M ** - P ** - U ** - W/X **	Full Size Horizontal Mount
BASE UNIT	F60	Base Unit
CPU	T	RS485 and Three Multi-mode fiber 100Base-FX (SFP with LC)
	U	RS485 and Two Multi-mode fiber 100Base-FX (SFP with LC), One 10/100Base-TX (SFP with RJ45)
	V	RS485 and Three 10/100Base-TX (SFP with RJ45)
SOFTWARE	00	No Software Options
	01	Ethernet Global Data (EGD)
	03	IEC 61850
	04	Ethernet Global Data (EGD) and IEC 61850
	06	Phasor measurement unit (PMU)
	07	Phasor measurement unit (PMU) and IEC 61850
	A0	CyberSentry Lvl 1
	A1	CyberSentry Lvl 1 and Ethernet Global Data (EGD)
	A3	CyberSentry Lvl 1 and IEC 61850
	A4	CyberSentry Lvl 1 and IEC 61850 and Ethernet Global Data (EGD)
	A6	CyberSentry Lvl 1 and phasor measurement unit (PMU)
	A7	CyberSentry Lvl 1 and IEC 61850 and phasor measurement unit (PMU)
	B0	IEEE 1588
	B1	IEEE 1588 and Ethernet Global Data (EGD)
	B3	IEEE 1588 and IEC 61850
	B4	IEEE 1588 and IEC 61850 and Ethernet Global Data (EGD)
	B6	IEEE 1588 and phasor measurement unit (PMU)
	B7	IEEE 1588 and IEC 61850 and phasor measurement unit (PMU)
	C0	Parallel Redundancy Protocol (PRP)
	C1	PRP and Ethernet Global Data
	C3	PRP and IEC 61850
	C4	PRP, Ethernet Global Data, and IEC 61850
	C6	PRP and PMU
	C7	PRP, IEC 61850, and PMU
	D0	IEEE 1588 and CyberSentry Lvl 1
	D1	IEEE 1588 and CyberSentry Lvl 1 and Ethernet Global Data (EGD)
	D3	IEEE 1588 and CyberSentry Lvl 1 and IEC 61850
	D4	IEEE 1588 and CyberSentry Lvl 1 and IEC 61850 and Ethernet Global Data (EGD)
	D6	IEEE 1588 and CyberSentry Lvl 1 and phasor measurement unit (PMU)
	D7	IEEE 1588 and CyberSentry Lvl 1 and IEC 61850 and phasor measurement unit (PMU)
	E0	IEEE 1588 and PRP
	E1	IEEE 1588, PRP, and Ethernet Global Dada
	E3	IEEE 1588, PRP, and IEC 61850
	E4	IEEE 1588, PRP, Ethernet Global Data, and IEC 61850
	E6	IEEE 1588, PRP, and PMU
	E7	IEEE 1588, PRP, IEC 61850, and PMU
	F0	PRP and CyberSentry Lvl1
	F1	PRP, CyberSentry Lvl1, and Ethernet Global Data
	F3	PRP, CyberSentry Lvl 1, and IEC 61850
	F4	PRP, CyberSentry Lvl 1, Ethernet Global Data, and IEC 61850
	F6	PRP, CyberSentry Lvl 1, and PMU
	F7	PRP, CyberSentry Lvl 1, IEC 61850, and PMU
	G0	IEEE 1588, PRP, and CyberSentry Lvl 1
	G1	IEEE 1588, PRP, CyberSentry Lvl 1, Ethernet Global Data
	G3	IEEE 1588, PRP, CyberSentry Lvl 1, and IEC 61850
	G4	IEEE 1588, PRP, CyberSentry Lvl 1, Ethernet Global Data, and IEC 61850
	G6	IEEE 1588, PRP, CyberSentry Lvl 1, and PMU
	G7	IEEE 1588, PRP, CyberSentry Lvl 1, IEC 61850, and PMU
	J0	IEC 60870-5-103
	J1	IEC 60870-5-103 + EGD
	J3	IEC 60870-5-103 + IEC 61850
	J4	IEC 60870-5-103 + EGD + IEC 61850
	J6	IEC 60870-5-103 + PMU
	J7	IEC 60870-5-103 + IEC 61850 + PMU
	K0	IEEE 1588 + PRP + IEC 60870-5-103
	K1	IEEE 1588 + PRP + IEC 60870-5-103 + EGD
	K3	IEEE 1588 + PRP + IEC 60870-5-103 + IEC 61850
	K4	IEEE 1588 + PRP + IEC 60870-5-103 + EGD + IEC 61850
	K6	IEEE 1588 + PRP + IEC 60870-5-103 + PMU
	K7	IEEE 1588 + PRP + IEC 60870-5-103 + IEC 61850 + PMU
	L0	IEC 60870-5-103 + IEEE1588 + PRP + CyberSentry Lvl 1
	L1	IEC 60870-5-103 + IEEE1588 + PRP + CyberSentry Lvl 1 + EGD
	L3	IEC 60870-5-103 + IEEE1588 + PRP + CyberSentry Lvl 1 + IEC 61850
	L4	IEC 60870-5-103 + IEEE1588 + PRP + CyberSentry Lvl 1 + EGD + IEC 61850
	L6	IEC 60870-5-103 + IEEE1588 + PRP + CyberSentry Lvl 1 + PMU
	L7	IEC 60870-5-103 + IEEE1588 + PRP + CyberSentry Lvl 1 + IEC 61850 + PMU
	M0	IEC 61850 + PMU + 61850-90-5
	M7	CyberSentry UR Lvl 1 + IEC 61850 + PMU + 61850-90-5
	MD	IEEE 1588 + IEC 61850 + PMU + 61850-90-5
	MJ	PRP + IEC 61850 + PMU + 61850-90-5
	MP	IEEE 1588 + CyberSentry UR Lvl 1 + IEC 61850 + PMU + 61850-90-5
	MV	IEEE 1588 + PRP + IEC 61850 + PMU + 61850-90-5
	N1	PRP + CyberSentry UR Lvl 1 + IEC 61850 + PMU + 61850-90-5
	N7	IEEE 1588 + PRP + CyberSentry UR Lvl 1 + IEC 61850 + PMU + 61850-90-5
	ND	IEC 60870-5-103 + IEC 61850 + PMU + 61850-90-5
	NJ	IEEE 1588 + PRP + IEC 60870-5-103 + IEC 61850 + PMU + 61850-90-5
	NP	IEC 60870-5-103 + IEEE 1588 + PRP + CyberSentry UR Lvl 1 + IEC 61850 + PMU + 61850-90-5

F60	- * **	- * * *	- F **	- H **	- M **	- P **	- U **	- W/X **			Full Size Horizontal Mount
MOUNT/ COATING	H										Horizontal (19" rack) - Standard
	A										Horizontal (19" rack) - With harsh environmental coating
FACEPLATE/ DISPLAY		C									English display
		D									French display
		R									Russian display
		P									English display with 4 small and 12 large programmable pushbuttons
		G									French display with 4 small and 12 large programmable pushbuttons
		S									Russian display with 4 small and 12 large programmable pushbuttons
		K									Enhanced front panel with English display
		M									Enhanced front panel with French display
		Q									Enhanced front panel with Russian display
		U									Enhanced front panel with Chinese display
		L									Enhanced front panel with English display and user-programmable pushbuttons
		N									Enhanced front panel with French display and user-programmable pushbuttons
		T									Enhanced front panel with Russian display and user-programmable pushbuttons
		V									Enhanced front panel with Chinese display and user-programmable pushbuttons
		W									Enhanced front panel with Turkish display
		Y									Enhanced front panel with Turkish display and user-programmable pushbuttons
		I									Enhanced front panel with German display
		J									Enhanced front panel with German display and user-programmable pushbuttons
POWER SUPPLY (redundant supply must be same type as main supply)			H								125 / 250 V AC/DC power supply
			H							RH	125 / 250 V AC/DC with redundant 125 / 250 V AC/DC power supply
			L								24 to 48 V (DC only) power supply
			L							RL	24 to 48 V (DC only) with redundant 24 to 48 V DC power supply
PROCESS BUS MODULE				81							Eight-port digital process bus module
CONTACT INPUTS/OUTPUTS				XX		XX	XX	XX	XX		No Module
							4A	4A			4 Solid-State (no monitoring) MOSFET outputs
							4B	4B			4 Solid-State (voltage with optional current) MOSFET outputs
							4C	4C			4 Solid-State (current with optional voltage) MOSFET outputs
							4D	4D			16 Contact inputs with Auto-Burnishing (maximum of three modules within a case)
							4L	4L			14 Form-A (no monitoring) Latching outputs
							67	67			8 Form-A (no monitoring) outputs
							6A	6A			2 Form-A (voltage with optional current) and 2 Form-C outputs, 8 contact inputs
							6B	6B			2 Form-A (voltage with optional current) and 4 Form-C outputs, 4 contact inputs
							6C	6C			8 Form-C outputs
							6D	6D			16 Contact inputs
							6E	6E			4 Form-C outputs, 8 contact inputs
							6F	6F			8 Fast Form-C outputs
							6G	6G			4 Form-A (voltage with optional current) outputs, 8 contact inputs
							6H	6H			6 Form-A (voltage with optional current) outputs, 4 contact inputs
							6K	6K			4 Form-C and 4 Fast Form-C outputs
							6L	6L			2 Form-A (current with optional voltage) and 2 Form-C outputs, 8 contact inputs
							6M	6M			2 Form-A (current with optional voltage) and 4 Form-C outputs, 4 contact inputs
							6N	6N			4 Form-A (current with optional voltage) outputs, 8 contact inputs
							6P	6P			6 Form-A (current with optional voltage) outputs, 4 contact inputs
							6R	6R			2 Form-A (no monitoring) and 2 Form-C outputs, 8 contact inputs
							6S	6S			2 Form-A (no monitoring) and 4 Form-C outputs, 4 contact inputs
							6T	6T			4 Form-A (no monitoring) outputs, 8 contact inputs
							6U	6U			6 Form-A (no monitoring) outputs, 4 contact inputs
							6V	6V			2 Form-A outputs, 1 Form-C output, 2 Form-A (no monitoring) latching outputs, 8 contact inputs

INTER-RELAY COMMUNICATIONS (select a maximum of 1 per unit)	2A	C37.94SM, 1300 nm single-mode, ELED, 1 channel single-mode
	2B	C37.94SM, 1300 nm single-mode, ELED, 2 channel single-mode
	2H	IEEE C37.94, 820 nm, 128 kbps, multimode, LED, 2 Channels
	2I	Channel 1 - IEEE C37.94, MM, 64/128 kbps; Channel 2 - 1300 nm, single-mode, Laser
	2J	Channel 1 - IEEE C37.94, MM, 64/128 kbps; Channel 2 - 1550 nm, single-mode, Laser
	72	1550 nm, single-mode, Laser, 1 Channel
	73	1550 nm, single-mode, Laser, 2 Channel
	76	IEEE C37.94, 820 nm, 64 kbps, multimode, LED, 1 Channel
	77	IEEE C37.94, 820 nm, 64 kbps, multimode, LED, 2 Channels
	7A	820 nm, multimode, LED, 1 Channel
	7B	1300 nm, multimode, LED, 1 Channel
	7C	1300 nm, single-mode, ELED, 1 Channel
	7D	1300 nm, single-mode, Laser, 1 Channel
	7F	Channel 1 - G.703; Channel 2 - 1300 nm, multimode
	7G	Channel 1 - G.703; Channel 2 - 1300 nm, single-mode ELED
	7H	820 nm, multimode, LED, 2 Channels
	7I	1300 nm, multimode, LED, 2 Channels
	7J	1300 nm, single-mode, ELED, 2 Channels
	7K	1300 nm, single-mode, Laser, 2 Channels
	7M	Channel 1 - RS422; Channel 2 - 1300 nm, multimode, LED
	7N	Channel 1 - RS422; Channel 2 - 1300 nm, single-mode, ELED
	7P	Channel 1 - RS422; Channel 2 - 1300 nm, single-mode, Laser
	7Q	Channel 1 - G.703; Channel 2 - 1300 nm, single-mode Laser
	7R	G.703, 1 Channel
	7S	G.703, 2 Channels
	7T	RS422, 1 Channel
	7W	RS422, 2 Channels

Table 2-7: F60 order codes for reduced-size vertical units with process bus

	F60 - * ** - * * * - F ** - H ** - M ** - P/R **	Reduced Size Vertical Mount (see note regarding P/R slot below)
BASE UNIT	F60	Base Unit
CPU	T	RS485 and Three Multi-mode fiber 100Base-FX (SFP with LC)
	U	RS485 and Two Multi-mode fiber 100Base-FX (SFP with LC), One 10/100Base-TX (SFP with RJ45)
	V	RS485 and Three 10/100Base-TX (SFP with RJ45)
SOFTWARE	00	No Software Options
	01	Ethernet Global Data (EGD)
	03	IEC 61850
	04	Ethernet Global Data (EGD) and IEC 61850
	06	Phasor measurement unit (PMU)
	07	Phasor measurement unit (PMU) and IEC 61850
	A0	CyberSentry Lvl 1
	A1	CyberSentry Lvl 1 and Ethernet Global Data (EGD)
	A3	CyberSentry Lvl 1 and IEC 61850
	A4	CyberSentry Lvl 1 and IEC 61850 and Ethernet Global Data (EGD)
	A6	CyberSentry Lvl 1 and phasor measurment unit (PMU)
	A7	CyberSentry Lvl 1 and IEC 61850 and phasor measurement unit (PMU)
	B0	IEEE 1588
	B1	IEEE 1588 and Ethernet Global Data (EGD)
	B3	IEEE 1588 and IEC 61850
	B4	IEEE 1588 and IEC 61850 and Ethernet Global Data (EGD)
	B6	IEEE 1588 and phasor measurement unit (PMU)
	B7	IEEE 1588 and IEC 61850 and phasor measurement unit (PMU)
	C0	Parallel Redundancy Protocol (PRP)
	C1	PRP and Ethernet Global Data
	C3	PRP and IEC 61850
	C4	PRP, Ethernet Global Data, and IEC 61850
	C6	PRP and PMU
	C7	PRP, IEC 61850, and PMU
	D0	IEEE 1588 and CyberSentry Lvl 1
	D1	IEEE 1588 and CyberSentry Lvl 1 and Ethernet Global Data (EGD)
	D3	IEEE 1588 and CyberSentry Lvl 1 and IEC 61850
	D4	IEEE 1588 and CyberSentry Lvl 1 and IEC 61850 and Ethernet Global Data (EGD)
	D6	IEEE 1588 and CyberSentry Lvl 1 and phasor measurement unit (PMU)
	D7	IEEE 1588 and CyberSentry Lvl 1 and IEC 61850 and phasor measurement unit (PMU)
	E0	IEEE 1588 and PRP
	E1	IEEE 1588, PRP, and Ethernet Global Dada
	E3	IEEE 1588, PRP, and IEC 61850
	E4	IEEE 1588, PRP, Ethernet Global Data, and IEC 61850
	E6	IEEE 1588, PRP, and PMU
	E7	IEEE 1588, PRP, IEC 61850, and PMU
	F0	PRP and CyberSentry Lvl1
	F1	PRP, CyberSentry Lvl1, and Ethernet Global Data
	F3	PRP, CyberSentry Lvl 1, and IEC 61850
	F4	PRP, CyberSentry Lvl 1, Ethernet Global Data, and IEC 61850
	F6	PRP, CyberSentry Lvl 1, and PMU
	F7	PRP, CyberSentry Lvl 1, IEC 61850, and PMU
	G0	IEEE 1588, PRP, and CyberSentry Lvl 1
	G1	IEEE 1588, PRP, CyberSentry Lvl 1, Ethernet Global Data
	G3	IEEE 1588, PRP, CyberSentry Lvl 1, and IEC 61850
	G4	IEEE 1588, PRP, CyberSentry Lvl 1, Ethernet Global Data, and IEC 61850
	G6	IEEE 1588, PRP, CyberSentry Lvl 1, and PMU
	G7	IEEE 1588, PRP, CyberSentry Lvl 1, IEC 61850, and PMU
	J0	IEC 60870-5-103
	J1	IEC 60870-5-103 + EGD
	J3	IEC 60870-5-103 + IEC 61850
	J4	IEC 60870-5-103 + EGD + IEC 61850
	J6	IEC 60870-5-103 + PMU
	J7	IEC 60870-5-103 + IEC 61850 + PMU
	K0	IEEE 1588 + PRP + IEC 60870-5-103
	K1	IEEE 1588 + PRP + IEC 60870-5-103 + EGD
	K3	IEEE 1588 + PRP + IEC 60870-5-103 + IEC 61850
	K4	IEEE 1588 + PRP + IEC 60870-5-103 + EGD + IEC 61850
	K6	IEEE 1588 + PRP + IEC 60870-5-103 + PMU
	K7	IEEE 1588 + PRP + IEC 60870-5-103 + IEC 61850 + PMU
	L0	IEC 60870-5-103 + IEEE1588 + PRP + CyberSentry Lvl 1
	L1	IEC 60870-5-103 + IEEE1588 + PRP + CyberSentry Lvl 1 + EGD
	L3	IEC 60870-5-103 + IEEE1588 + PRP + CyberSentry Lvl 1 + IEC 61850
	L4	IEC 60870-5-103 + IEEE1588 + PRP + CyberSentry Lvl 1 + EGD + IEC 61850
	L6	IEC 60870-5-103 + IEEE1588 + PRP + CyberSentry Lvl 1 + PMU
	L7	IEC 60870-5-103 + IEEE1588 + PRP + CyberSentry Lvl 1 + IEC 61850 + PMU
	M0	IEC 61850 + PMU + 61850-90-5
	M7	CyberSentry UR Lvl 1 + IEC 61850 + PMU + 61850-90-5
	MD	IEEE 1588 + IEC 61850 + PMU + 61850-90-5
	MJ	PRP + IEC 61850 + PMU + 61850-90-5
	MP	IEEE 1588 + CyberSentry UR Lvl 1 + IEC 61850 + PMU + 61850-90-5
	MV	IEEE 1588 + PRP + IEC 61850 + PMU + 61850-90-5
	N1	PRP + CyberSentry UR Lvl 1 + IEC 61850 + PMU + 61850-90-5
	N7	IEEE 1588 + PRP + CyberSentry UR Lvl 1 + IEC 61850 + PMU + 61850-90-5
	ND	IEC 60870-5-103 + IEC 61850 + PMU + 61850-90-5
	NJ	IEEE 1588 + PRP + IEC 60870-5-103 + IEC 61850 + PMU + 61850-90-5
	NP	IEC 60870-5-103 + IEEE 1588 + PRP + CyberSentry UR Lvl 1 + IEC 61850 + PMU + 61850-90-5
MOUNT/ COATING	V	Vertical (3/4 rack) - Standard
	B	Vertical (3/4 rack) - With harsh environmental coating
FACEPLATE/ DISPLAY	F	English display
	D	French display
	R	Russian display
	K	Enhanced front panel with English display
	M	Enhanced front panel with French display
	Q	Enhanced front panel with Russian display
	U	Enhanced front panel with Chinese display
	L	Enhanced front panel with English display and user-programmable pushbuttons
	N	Enhanced front panel with French display and user-programmable pushbuttons
	T	Enhanced front panel with Russian display and user-programmable pushbuttons
	V	Enhanced front panel with Chinese display and user-programmable pushbuttons
	W	Enhanced front panel with Turkish display
	Y	Enhanced front panel with Turkish display and user-programmable pushbuttons
	I	Enhanced front panel with German display
	J	Enhanced front panel with German display and user-programmable pushbuttons

F60 - * ** - * * * - F ** - H ** - M ** - P/R **						Reduced Size Vertical Mount (see note regarding P/R slot below)
POWER SUPPLY	H	|	|	|	|	125 / 250 V AC/DC power supply
	L	|	|	|	|	24 to 48 V (DC only) power supply
PROCESS BUS MODULE	|	81	|	|	Eight-port digital process bus module	
CONTACT INPUTS/OUTPUTS	|	|	XX	XX	No Module	
	|	|	|	4A	4 Solid-State (no monitoring) MOSFET outputs	
	|	|	|	4B	4 Solid-State (voltage with optional current) MOSFET outputs	
	|	|	|	4C	4 Solid-State (current with optional voltage) MOSFET outputs	
	|	|	|	4D	16 Contact inputs with Auto-Burnishing (maximum of three modules within a case)	
	|	|	|	4L	14 Form-A (no monitoring) Latching outputs	
	|	|	|	67	8 Form-A (no monitoring) outputs	
	|	|	|	6A	2 Form-A (voltage with optional current) and 2 Form-C outputs, 8 contact inputs	
	|	|	|	6B	2 Form-A (voltage with optional current) and 4 Form-C outputs, 4 contact inputs	
	|	|	|	6C	8 Form-C outputs	
	|	|	|	6D	16 Contact inputs	
	|	|	|	6E	4 Form-C outputs, 8 contact inputs	
	|	|	|	6F	8 Fast Form-C outputs	
	|	|	|	6G	4 Form-A (voltage with optional current) outputs, 8 contact inputs	
	|	|	|	6H	6 Form-A (voltage with optional current) outputs, 4 contact inputs	
	|	|	|	6K	4 Form-C and 4 Fast Form-C outputs	
	|	|	|	6L	2 Form-A (current with optional voltage) and 2 Form-C outputs, 8 contact inputs	
	|	|	|	6M	2 Form-A (current with optional voltage) and 4 Form-C outputs, 4 contact inputs	
	|	|	|	6N	4 Form-A (current with optional voltage) outputs, 8 contact inputs	
	|	|	|	6P	6 Form-A (current with optional voltage) outputs, 4 contact inputs	
	|	|	|	6R	2 Form-A (no monitoring) and 2 Form-C outputs, 8 contact inputs	
	|	|	|	6S	2 Form-A (no monitoring) and 4 Form-C outputs, 4 contact inputs	
	|	|	|	6T	4 Form-A (no monitoring) outputs, 8 contact inputs	
	|	|	|	6U	6 Form-A (no monitoring) outputs, 4 contact inputs	
	|	|	|	6V	2 Form-A outputs, 1 Form-C output, 2 Form-A (no monitoring) latching outputs, 8 contact inputs	
INTER-RELAY COMMUNICATIONS (select a maximum of 1 per unit) For the last module, slot P is used for digital input/output modules; slot R is used for inter-relay communications modules.				2A	C37.94SM, 1300 nm single-mode, ELED, 1 channel single-mode	
				2B	C37.94SM, 1300 nm single-mode, ELED, 2 channel single-mode	
				2H	IEEE C37.94, 820 nm, 128 kbps, multimode, LED, 2 Channels	
				2I	Channel 1 - IEEE C37.94, MM, 64/128 kbps; Channel 2 - 1300 nm, single-mode, Laser	
				2J	Channel 1 - IEEE C37.94, MM, 64/128 kbps; Channel 2 - 1550 nm, single-mode, Laser	
				72	1550 nm, single-mode, Laser, 1 Channel	
				73	1550 nm, single-mode, Laser, 2 Channel	
				76	IEEE C37.94, 820 nm, 64 kbps, multimode, LED, 1 Channel	
				77	IEEE C37.94, 820 nm, 64 kbps, multimode, LED, 2 Channels	
				7A	820 nm, multimode, LED, 1 Channel	
				7B	1300 nm, multimode, LED, 1 Channel	
				7C	1300 nm, single-mode, ELED, 1 Channel	
				7D	1300 nm, single-mode, Laser, 1 Channel	
				7F	Channel 1 - G.703; Channel 2 - 1300 nm, multimode	
				7G	Channel 1 - G.703; Channel 2 - 1300 nm, single-mode ELED	
				7H	820 nm, multimode, LED, 2 Channels	
				7I	1300 nm, multimode, LED, 2 Channels	
				7J	1300 nm, single-mode, ELED, 2 Channels	
				7K	1300 nm, single-mode, Laser, 2 Channels	
				7M	Channel 1 - RS422; Channel 2 - 1300 nm, multimode, LED	
				7N	Channel 1 - RS422; Channel 2 - 1300 nm, single-mode, ELED	
				7P	Channel 1 - RS422; Channel 2 - 1300 nm, single-mode, Laser	
				7Q	Channel 1 - G.703; Channel 2 - 1300 nm, single-mode Laser	
				7R	G.703, 1 Channel	
				7S	G.703, 2 Channels	
				7T	RS422, 1 Channel	
				7W	RS422, 2 Channels	

2.3.3 Replacement modules

Replacement modules can be ordered separately. When ordering a replacement CPU module or faceplate, provide the serial number of your existing unit.

Not all replacement modules apply to the F60 relay. The modules specified in the order codes for the F60 are available as replacement modules for the F60.

The order codes shown here are subject to change without notice. See the web page for the product for the latest options.

Table 2-8: UR order codes for replacement modules, horizontal units

	UR - **	- *	
POWER SUPPLY redundant supply only available in horizontal units and must be same type as main supply, for example must swap both power supplies when switching from RH to SH	SH	A	125 / 300 V AC/DC
	SL	A	24 to 48 V (DC only)
CPU	T		RS485 with 3 100Base-FX Ethernet, multimode, SFP with LC
	U		RS485 with 1 100Base-TX Ethernet, SFP RJ-45 + 2 100Base-FX Ethernet, multimode, SFP with LC
	V		RS485 with 3 100Base-TX Ethernet, SFP with RJ-45
FACEPLATE/DISPLAY	3C		Horizontal faceplate with keypad and English display
	3D		Horizontal faceplate with keypad and French display
	3R		Horizontal faceplate with keypad and Russian display
	3A		Horizontal faceplate with keypad and Chinese display
	3P		Horizontal faceplate with keypad, user-programmable pushbuttons, and English display
	3G		Horizontal faceplate with keypad, user-programmable pushbuttons, and French display
	3S		Horizontal faceplate with keypad, user-programmable pushbuttons, and Russian display
	3B		Horizontal faceplate with keypad, user-programmable pushbuttons, and Chinese display
	3K		Enhanced front panel with English display
	3M		Enhanced front panel with French display
	3Q		Enhanced front panel with Russian display
	3U		Enhanced front panel with Chinese display
	3L		Enhanced front panel with English display and user-programmable pushbuttons
	3N		Enhanced front panel with French display and user-programmable pushbuttons
	3T		Enhanced front panel with Russian display and user-programmable pushbuttons
	3V		Enhanced front panel with Chinese display and user-programmable pushbuttons
	3I		Enhanced front panel with German display
	3J		Enhanced front panel with German display and user-programmable pushbuttons
CONTACT INPUTS AND OUTPUTS	4A		4 Solid-State (no monitoring) MOSFET outputs
	4B		4 Solid-State (voltage with optional current) MOSFET outputs
	4C		4 Solid-State (current with optional voltage) MOSFET outputs
	4D		16 Contact inputs with Auto-Burnishing
	4L		14 Form-A (no monitoring) Latching outputs
	67		8 Form-A (no monitoring) outputs
	6A		2 Form-A (voltage with optional current) and 2 Form-C outputs, 8 contact inputs
	6B		2 Form-A (voltage with optional current) and 4 Form-C outputs, 4 contact inputs
	6C		8 Form-C outputs
	6D		16 Contact inputs
	6E		4 Form-C outputs, 8 contact inputs
	6F		8 Fast Form-C outputs
	6G		4 Form-A (voltage with optional current) outputs, 8 contact inputs
	6H		6 Form-A (voltage with optional current) outputs, 4 contact inputs
	6K		4 Form-C and 4 Fast Form-C outputs
	6L		2 Form-A (current with optional voltage) and 2 Form-C outputs, 8 contact inputs
	6M		2 Form-A (current with optional voltage) and 4 Form-C outputs, 4 contact inputs
	6N		4 Form-A (current with optional voltage) outputs, 8 contact inputs
	6P		6 Form-A (current with optional voltage) outputs, 4 contact inputs
	6R		2 Form-A (no monitoring) and 2 Form-C outputs, 8 contact inputs
	6S		2 Form-A (no monitoring) and 4 Form-C outputs, 4 contact inputs
	6T		4 Form-A (no monitoring) outputs, 8 contact inputs
	6U		6 Form-A (no monitoring) outputs, 4 contact inputs
	6V		2 Form-A outputs, 1 Form-C output, 2 Form-A (no monitoring) latching outputs, 8 contact inputs
CT/VT MODULES (not available for the C30)	8L		Standard 4CT/4VT with enhanced diagnostics
	8N		Standard 8CT with enhanced diagnostics
	8M		Sensitive Ground 4CT/4VT with enhanced diagnostics
	8R		Sensitive Ground 8CT with enhanced diagnostics
	8Z *		HI-Z 4CT
INTER-RELAY COMMUNICATIONS	2A		C37.94SM, 1300 nm single-mode, ELED, 1 channel single-mode
	2B		C37.94SM, 1300 nm single-mode, ELED, 2 channel single-mode
	2H		IEEE C37.94, 820 nm, 128 kbps, multimode, LED, 2 Channels
	2I		Channel 1 - IEEE C37.94, multimode, 64/128 kbps; Channel 2 - 1300 nm, single-mode, Laser
	2J		Channel 1 - IEEE C37.94, multimode, 64/128 kbps; Channel 2 - 1550 nm, single-mode, Laser
	72		1550 nm, single-mode, Laser, 1 Channel
	73		1550 nm, single-mode, Laser, 2 Channel
	76		IEEE C37.94, 820 nm, multimode, LED, 1 Channel
	77		IEEE C37.94, 820 nm, multimode, LED, 2 Channels
	7A		820 nm, multimode, LED, 1 Channel
	7B		1300 nm, multimode, LED, 1 Channel
	7C		1300 nm, single-mode, ELED, 1 Channel
	7D		1300 nm, single-mode, Laser, 1 Channel
	7F		Channel 1 - G.703; Channel 2 - 1300 nm, multimode
	7G		Channel 1 - G.703; Channel 2 - 1300 nm, single-mode ELED
	7H		820 nm, multimode, LED, 2 Channels
	7I		1300 nm, multimode, LED, 2 Channels
	7J		1300 nm, single-mode, ELED, 2 Channels
	7K		1300 nm, single-mode, Laser, 2 Channels
	7M		Channel 1 - RS422; Channel 2 - 1300 nm, multimode, LED
	7N		Channel 1 - RS422; Channel 2 - 1300 nm, single-mode, ELED
	7P		Channel 1 - RS422; Channel 2 - 1300 nm, single-mode, Laser
	7Q		Channel 1 - G.703; Channel 2 - 1300 nm, single-mode Laser
	7R		G.703, 1 Channel
	7S		G.703, 2 Channels
	7T		RS422, 1 Channel
	7W		RS422, 2 Channels
TRANSDUCER INPUTS/OUTPUTS	5A		4 DCmA inputs, 4 DCmA outputs (only one 5A or 5D module is allowed)
	5C		8 RTD inputs
	5D		4 RTD inputs, 4 DCmA outputs (only one 5A or 5D module is allowed)
	5E		4 DCmA inputs, 4 RTD inputs
	5F		8 DCmA inputs

* When an 8Z module is ordered, slot F must have an 8L module. When 8Z is used alongside a CT/VT module with enhanced diagnostics, enhanced diagnostics is not enabled because 8Z does not offer enhanced diagnostics.

2

Table 2-9: UR order codes for replacement modules, vertical units

	UR	-	**	-	*	
POWER SUPPLY			SH		B	125 / 300 V AC/DC
			SL		B	24 to 48 V (DC only)
CPU			T			RS485 with 3 100Base-FX Ethernet, multimode, SFP with LC
			U			RS485 with 1 100Base-TX Ethernet, SFP RJ-45 + 2 100Base-FX Ethernet, multimode, SFP with LC
			V			RS485 with 3 100Base-TX Ethernet, SFP with RJ-45
FACEPLATE/DISPLAY			3F			Vertical faceplate with keypad and English display
			3D			Vertical faceplate with keypad and French display
			3R			Vertical faceplate with keypad and Russian display
			3A			Vertical faceplate with keypad and Chinese display
			3K			Enhanced front panel with English display
			3M			Enhanced front panel with French display
			3Q			Enhanced front panel with Russian display
			3U			Enhanced front panel with Chinese display
			3L			Enhanced front panel with English display and user-programmable pushbuttons
			3N			Enhanced front panel with French display and user-programmable pushbuttons
			3T			Enhanced front panel with Russian display and user-programmable pushbuttons
			3V			Enhanced front panel with Chinese display and user-programmable pushbuttons
			3I			Enhanced front panel with German display
			3J			Enhanced front panel with German display and user-programmable pushbuttons
CONTACT INPUTS/OUTPUTS			4A			4 Solid-State (no monitoring) MOSFET outputs
			4B			4 Solid-State (voltage with optional current) MOSFET outputs
			4C			4 Solid-State (current with optional voltage) MOSFET outputs
			4D			16 Contact inputs with Auto-Burnishing
			4L			14 Form-A (no monitoring) Latching outputs
			67			8 Form-A (no monitoring) outputs
			6A			2 Form-A (voltage with optional current) and 2 Form-C outputs, 8 contact inputs
			6B			2 Form-A (voltage with optional current) and 4 Form-C outputs, 4 contact inputs
			6C			8 Form-C outputs
			6D			16 Contact inputs
			6E			4 Form-C outputs, 8 contact inputs
			6F			8 Fast Form-C outputs
			6G			4 Form-A (voltage with optional current) outputs, 8 contact inputs
			6H			6 Form-A (voltage with optional current) outputs, 4 contact inputs
			6K			4 Form-C and 4 Fast Form-C outputs
			6L			2 Form-A (current with optional voltage) and 2 Form-C outputs, 8 contact inputs
			6M			2 Form-A (current with optional voltage) and 4 Form-C outputs, 4 contact inputs
			6N			4 Form-A (current with optional voltage) outputs, 8 contact inputs
			6P			6 Form-A (current with optional voltage) outputs, 4 contact inputs
			6R			2 Form-A (no monitoring) and 2 Form-C outputs, 8 contact inputs
			6S			2 Form-A (no monitoring) and 4 Form-C outputs, 4 contact inputs
			6T			4 Form-A (no monitoring) outputs, 8 contact inputs
			6U			6 Form-A (no monitoring) outputs, 4 contact inputs
			6V			2 Form-A outputs, 1 Form-C output, 2 Form-A (no monitoring) latching outputs, 8 contact inputs
CT/VT MODULES (not available for the C30)			8L			Standard 4CT/4VT with enhanced diagnostics
			8N			Standard 8CT with enhanced diagnostics
			8M			Sensitive Ground 4CT/4VT with enhanced diagnostics
			8R			Sensitive Ground 8CT with enhanced diagnostics
			8Z *			HI-Z 4CT
INTER-RELAY COMMUNICATIONS			2A			C37.94SM, 1300 nm single-mode, ELED, 1 channel single-mode
			2B			C37.94SM, 1300 nm single-mode, ELED, 2 channel single-mode
			2H			IEEE C37.94, 820 nm, 128 kbps, multimode, LED, 2 Channels
			2I			Channel 1 - IEEE C37.94, multimode, 64/128 kbps; Channel 2 - 1300 nm, single-mode, Laser
			2J			Channel 1 - IEEE C37.94, multimode, 64/128 kbps; Channel 2 - 1550 nm, single-mode, Laser
			72			1550 nm, single-mode, Laser, 1 Channel
			73			1550 nm, single-mode, Laser, 2 Channel
			76			IEEE C37.94, 820 nm, 64 kbps, multimode, LED, 1 Channel
			77			IEEE C37.94, 820 nm, 64 kbps, multimode, LED, 2 Channels
			7A			820 nm, multimode, LED, 1 Channel
			7B			1300 nm, multimode, LED, 1 Channel
			7C			1300 nm, single-mode, ELED, 1 Channel
			7D			1300 nm, single-mode, Laser, 1 Channel
			7F			Channel 1 - G.703; Channel 2 - 1300 nm, multimode
			7G			Channel 1 - G.703; Channel 2 - 1300 nm, single-mode ELED
			7H			820 nm, multimode, LED, 2 Channels
			7I			1300 nm, multimode, LED, 2 Channels
			7J			1300 nm, single-mode, ELED, 2 Channels
			7K			1300 nm, single-mode, Laser, 2 Channels
			7M			Channel 1 - RS422; Channel 2 - 1300 nm, multimode, LED
			7N			Channel 1 - RS422; Channel 2 - 1300 nm, single-mode, ELED
			7P			Channel 1 - RS422; Channel 2 - 1300 nm, single-mode, Laser
			7Q			Channel 1 - G.703; Channel 2 - 1300 nm, single-mode Laser
			7R			G.703, 1 Channel
			7S			G.703, 2 Channels
			7T			RS422, 1 Channel
			7W			RS422, 2 Channels
TRANSDUCER INPUTS/OUTPUTS			5A			4 DCmA inputs, 4 DCmA outputs (only one 5A or 5D module is allowed)
			5C			8 RTD inputs
			5D			4 RTD inputs, 4 DCmA outputs (only one 5A or 5D module is allowed)
			5E			4 DCmA inputs, 4 RTD inputs
			5F			8 DCmA inputs

* When an 8Z module is ordered, slot F must have an 8L module. When 8Z is used alongside a CT/VT module with enhanced diagnostics, enhanced diagnostics is not enabled because 8Z does not offer enhanced diagnostics.

2.4 Signal processing

2.4.1 UR signal processing

The UR series relays are microprocessor-based protective relays that are designed to measure power system conditions directly via CT and VT inputs and via other sources of information, such as analog inputs, communications inputs and contact inputs. The following figure shows the overall signal processing in URs.

An analog low pass anti-aliasing filter with a 3 dB corner frequency is set at 2.4 kHz and is used for current and voltage analog filtering as well as signal conditioning. The same filtering is applied for phase, ground currents, phase-to-phase (when applicable), and auxiliary voltages. The 2.4 kHz cut-off frequency applies to both 50 Hz and 60 Hz applications and fixed in the hardware, and thus is not dependent on the system nominal frequency setting.

Figure 2-3: UR signal processing

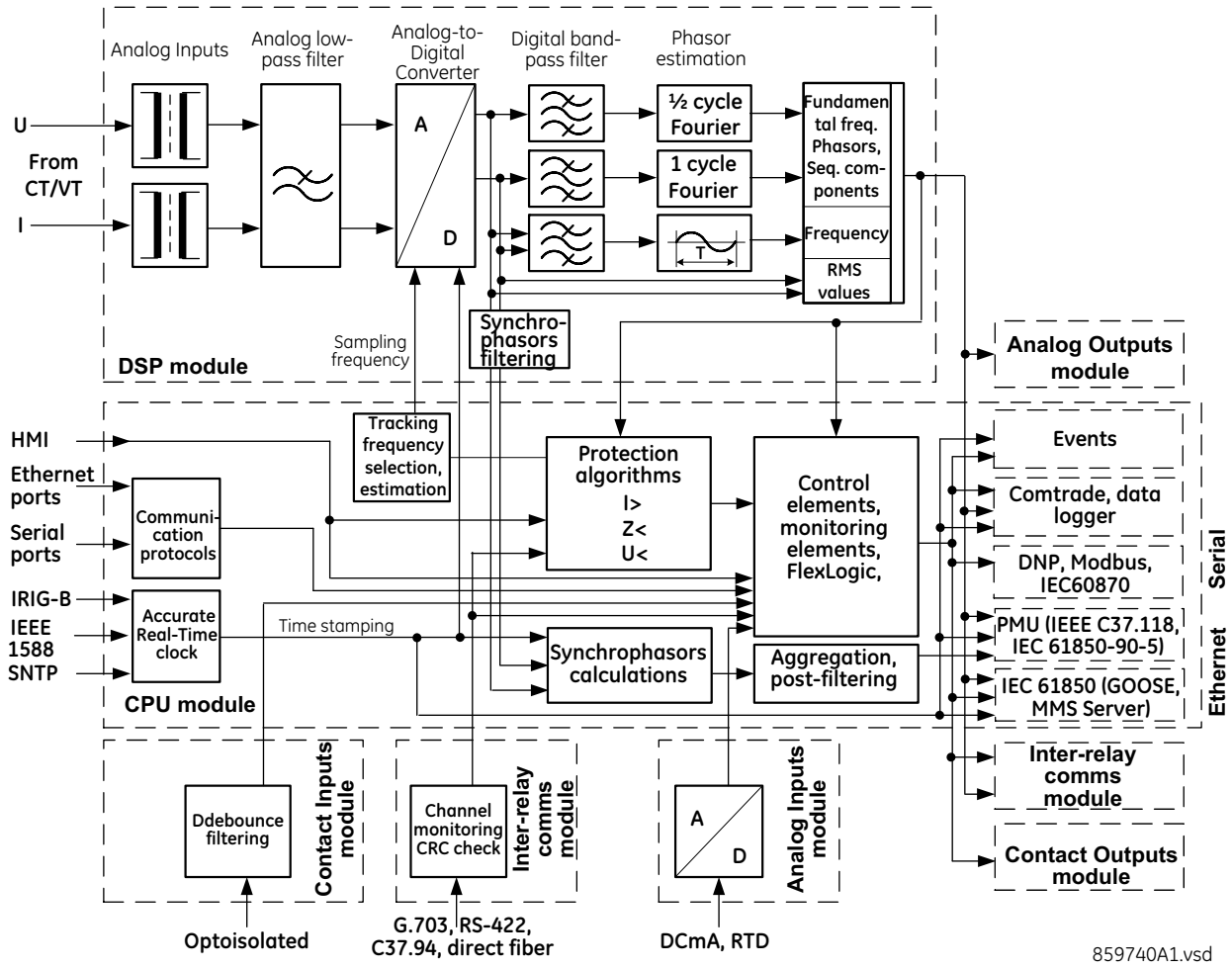

The UR samples its AC signals at 64 samples per cycle, that is, at 3840 Hz in 60 Hz systems, and 3200 Hz in 50 Hz systems. The sampling rate is dynamically adjusted to the actual system frequency by an accurate and fast frequency tracking system.

The A/D converter has the following ranges of AC signals:

Voltages:

$$\pm\sqrt{2} \cdot 260(\mathrm{V}) \qquad \textbf{Eq. 2-1}$$

Currents:

$$\pm\sqrt{2} \cdot 46\mathrm{rated}(\mathrm{A}) \qquad \textbf{Eq. 2-2}$$

Current harmonics are estimated based on raw samples with the use of the full-cycle Fourier filter. Harmonics 2nd through 25th are estimated.

True RMS value for the current is calculated on a per-phase basis. The true RMS can be used for demand recording or as an input signal to Time Overcurrent function, if the latter is intended for thermal protection. The true RMS is calculated as per the widely accepted definition:

$$I_{RMS(t)} = \sqrt{\frac{1}{T}\int_{(t-T)}^{t} i^2(t)dt} \qquad \textbf{Eq. 2-3}$$

RMS values include harmonics, inter-harmonics, DC components, and so on, along with fundamental frequency values. The true RMS value reflects thermal effects of the current and is used for the thermal related monitoring and protection functions.

Protection and control functions respond to phasors of the fundamental and/or harmonic frequency components (magnitudes and angles), with an exception for some functions that have an option for RMS or fundamental measurements, or some function responding to RMS only. This type of response is explained typically in each element's section in the instruction manual.

Currents are pre-filtered using a Finite Impulse Response (FIR) digital filter. The filter is designed to reject DC components and low-frequency distortions, without amplifying high-frequency noise. This filter is referred to as a modified MIMIC filter, which provides excellent filtering and overall balance between speed and accuracy of filtering. The filter is cascaded with the full-cycle Fourier filter for the current phasor estimation.

Voltages are pre-filtered using a patented Finite Impulse Response (FIR) digital filter. The filter has been optimized to reject voltage transformers specific distortions, such as Capacitive Voltage Transformer (CVT) noise and high-frequency oscillatory components. The filter is cascaded with the half-cycle Fourier filter for the voltage phasor estimation.

The URs measure power system frequency using the Clarke transformation by estimating the period of the waveform from two consecutive zero-crossings in the same direction (negative-to-positive). Voltage or current samples are pre-filtered using a Finite Impulse Response (FIR) digital filter to remove high frequency noise contained in the signal. The period is used after several security conditions are met, such as true RMS signal must be above 6% nominal for a certain time and others. If these security conditions are not met, the last valid measurement is used for a specific time after which the UR reverts to nominal system frequency.

Synchrophasors are calculated using a patented convolution integral algorithm. This algorithm allows use of the same time stamped samples, which are used for protection and taken at the same sampling frequency. This allows URs to use one sampling clock for both protection algorithms and synchrophasors.

Synchrophasors on firmware versions 7.23 and up have been tested and certified to meet IEEE C37.118-2011 and C37.118.1a-2014 standards for both metering and protection classes with outputs available up to 60 synchrophasors per second for the metering class and 120 synchrophasors per second for the protection class. Synchrophasors measurement are also available via IEC 61850-90-5 protocol.

Contact inputs threshold is settable in the firmware with 17, 33, 84, 166 VDC settings available. Inputs are scanned every 0.5 ms and can be conditioned for the critical applications, using debounce time timer, settable from 0.0 ms to 16.0 ms. Contact inputs with auto-burnishing are available as well, when external contacts are exposed to the contamination in a harsh industrial environment.

All measured values are available in the UR metering section on the front panel and via communications protocols. Measured analog values and binary signals can be captured in COMTRADE format with sampling rates from 8 to 64 samples per power cycle. Analog values can be captured with Data Logger, allowing much slower rates extended over long period of time.

Other advanced UR order code options are available to support IEC 61850 Ed2.0 (including fast GOOSE, MMS server, 61850 services, ICD/CID/IID files, and so on), IEEE 1588 (IEEE C37.238 power profile) based time synchronization, CyberSentry (advanced cyber security), the Parallel Redundancy Protocol (PRP), IEC 60870-5-103, and so on.

2.5 Specifications

Specifications are subject to change without notice.

2.5.1 Protection elements

The operating times include the activation time of a trip rated form-A output contact unless otherwise indicated. FlexLogic operands of a given element are 4 ms faster. Take this into account when using FlexLogic to interconnect with other protection or control elements of the relay, building FlexLogic equations, or interfacing with other intelligent electronic devices (IEDs) or power system devices via communications or different output contacts. If not specified, the operate times given here are for a 60 Hz system at nominal system frequency. Operate times for a 50 Hz system are 1.2 times longer. Timer Accuracy is specified as a percentage of the total operating time that is the sum of the Operate Time and settable Pickup Delay.

RESTRICTED GROUND FAULT

Pickup:	0.005 to 30.000 pu in steps of 0.001
Dropout:	97 to 98% of pickup
Slope:	0 to 100% in steps of 1%
Level accuracy:	
0.1 to 2.0 x CT rating:	±0.5% of reading or ±1% of rated (whichever is greater)
>2.0 x CT rating:	±1.5% of reading
Pickup delay:	0 to 600.00 s in steps of 0.01
Dropout delay:	0 to 600.00 s in steps of 0.01
Operate time:	<1 power system cycle

PHASE/NEUTRAL/GROUND TOC

Current:	Phasor or RMS
Pickup level:	0.000 to 30.000 pu in steps of 0.001
Dropout level:	97% of pickup
Level accuracy:	
0.1 to 2.0 × CT:	±0.5% of reading or ±0.4% of rated (whichever is greater)
> 2.0 × CT:	±1.5% of reading > 2.0 × CT rating
Timing characteristics:	IEEE Moderately/Very/Extremely Inverse; IEC (and BS) A/B/C and Short Inverse; GE IAC Inverse, Short/Very/ Extremely Inverse; I^2t; FlexCurves™ (programmable); (Curve multiplier 0.00 to 600.00 in steps of 0.01 s) Definite Time (Time delay = 0.00 to 600.00 in steps of 0.01 s)
Reset type:	Instantaneous/Timed (per IEEE)
Curve timing accuracy at 1.03 to 20 x pickup:	±3.5% of operate time or ±½ cycle (whichever is greater) from pickup to operate
Voltage restraint:	Modifies pickup current for voltage in the range of 0.1 < V < 0.9 VT Nominal in a fixed linear relationship

PHASE/NEUTRAL/GROUND IOC

Pickup level:	0.000 to 30.000 pu in steps of 0.001
Dropout level:	97% of pickup
Level accuracy:	
0.1 to 2.0 × CT rating:	±0.5% of reading or ±0.4% of rated (whichever is greater)
> 2.0 × CT rating:	±1.5% of reading
Overreach:	<2%
Pickup delay:	0.00 to 600.00 s in steps of 0.01
Reset delay:	0.00 to 600.00 s in steps of 0.01
Operate time:	<16 ms at 3 × pickup at 60 Hz (Phase/Ground IOC) <20 ms at 3 × pickup at 60 Hz (Neutral IOC)
Timer accuracy:	±3.5% of operate time or ±1/4 cycle (whichever is greater)

NEGATIVE SEQUENCE TOC

Pickup level:	0.000 to 30.000 pu in steps of 0.001
Dropout level:	97% of pickup
Level accuracy:	±0.5% of reading or ±0.4% of rated (whichever is greater) from 0.1 to 2.0 x CT rating ±1.5% of reading > 2.0 x CT rating

Timing characteristics:	IEEE Moderately/Very/Extremely Inverse; IEC (and BS) A/B/C and Short Inverse; GE IAC Inverse, Short/Very/ Extremely Inverse; I^2t; FlexCurves™ (programmable) (Curve multiplier = 0.00 to 600.00 in steps of 0.01 s); Definite Time (Time delay = 0.00 to 600.00 in steps of 0.01 s)
Reset type:	Instantaneous/Timed (per IEEE) and Linear
Curve timing accuracy at 1.03 to 20 x pickup:	±3.5% of operate time or ±½ cycle (whichever is greater) from pickup to operate

NEGATIVE SEQUENCE IOC

Pickup level:	0.000 to 30.000 pu in steps of 0.001
Dropout level:	97% of pickup
Level accuracy:	
0.1 to 2.0 × CT rating:	±0.5% of reading or ±0.4% of rated (whichever is greater)
>2.0 × CT rating:	±1.5% of reading
Overreach:	<2%
Pickup delay:	0.00 to 600.00 s in steps of 0.01
Reset delay:	0.00 to 600.00 s in steps of 0.01
Operate time:	<20 ms at 3 × pickup at 60 Hz
Timer accuracy:	±3% of operate time or ±1/4 cycle (whichever is greater)

PHASE DIRECTIONAL OVERCURRENT

Relay connection:	90° (quadrature)
Quadrature voltage:	ABC phase seq.: phase A (V_{BC}), phase B (V_{CA}), phase C (V_{AB}); ACB phase seq.: phase A (V_{CB}), phase B (V_{AC}), phase C (V_{BA})
Polarizing voltage threshold:	0.000 to 3.000 pu in steps of 0.001
Current sensitivity threshold:	0.05 pu
Characteristic angle:	0 to 359° in steps of 1
Angle accuracy:	±2°
Operation time (FlexLogic operands):	
Tripping (reverse load, forward fault):	<12 ms, typically
Blocking (forward load, reverse fault):	<8 ms, typically

NEUTRAL DIRECTIONAL OVERCURRENT

Directionality:	Co-existing forward and reverse
Polarizing:	Voltage, Current, Dual, Dual-V, Dual-I
Polarizing voltage:	V_0 or VX
Polarizing current:	IG
Operating current:	I_0
Level sensing:	$3 \times (\|I\_0\| - K \times \|I\_1\|)$, IG Independent for forward and reverse
Restraint, K:	0.000 to 0.500 in steps of 0.001
Characteristic angle:	–90 to 90° in steps of 1
Limit angle:	40 to 90° in steps of 1, independent for forward and reverse
Angle accuracy:	±2°
Offset impedance:	0.00 to 250.00 Ω in steps of 0.01
Pickup level:	0.002 to 30.000 pu in steps of 0.01
Dropout level:	97 to 98%
Operation time:	<16 ms at 3 × pickup at 60 Hz

NEGATIVE SEQUENCE DIRECTIONAL OC

Directionality:	Co-existing forward and reverse
Polarizing:	Voltage
Polarizing voltage:	V_2
Operating current:	I_2
Level sensing:	
Zero-sequence:	$\|I\_0\| - K \times \|I\_1\|$
Negative-sequence:	$\|I\_2\| - K \times \|I\_1\|$
Restraint, K:	0.000 to 0.500 in steps of 0.001
Characteristic angle:	0 to 90° in steps of 1

Limit angle:	40 to 90° in steps of 1, independent for forward and reverse
Angle accuracy:	±2°
Offset impedance:	0.00 to 250.00 Ω in steps of 0.01
Pickup level:	0.015 to 30.000 pu in steps of 0.01
Dropout level:	97%
Operation time:	<16 ms at 3 × pickup at 60 Hz

WATTMETRIC ZERO-SEQUENCE DIRECTIONAL

Measured power:	zero-sequence
Number of elements:	2
Characteristic angle:	0 to 360° in steps of 1
Minimum power:	0.001 to 1.200 pu in steps of 0.001
Pickup level accuracy:	±1% or ±0.0025 pu, whichever is greater
Hysteresis:	3% or 0.001 pu, whichever is greater
Timing characteristics:	Inverse time, or FlexCurve (Curve multiplier= 0.01 to 2.00 in steps of 0.01 s); Definite Time (Time delay = 0.00 to 600.00 in steps of 0.01 s)
Curve timing accuracy:	±3.5% of operate time or ±1 cycle (whichever is greater) from pickup to operate
Operate time:	<30 ms at 60 Hz

SENSITIVE DIRECTIONAL POWER

Measured power:	3-phase, true RMS
Number of stages:	2
Characteristic angle:	0 to 359° in steps of 1
Calibration angle:	0.00 to 0.95° in steps of 0.05
Minimum power:	–1.200 to 1.200 pu in steps of 0.001
Pickup level accuracy:	±1% or ±0.001 pu, whichever is greater
Hysteresis:	2% or 0.001 pu, whichever is greater
Pickup delay:	0 to 600.00 s in steps of 0.01
Timer accuracy:	±3% of operate time or ±1/4 cycle (whichever is greater)
Operate time:	<50 ms

PHASE UNDERVOLTAGE

Voltage:	Phasor only
Pickup level:	0.000 to 3.000 pu in steps of 0.001
Dropout level:	102% of pickup
Level accuracy:	±0.5% of reading from 10 to 208 V
Timing characteristics:	GE IAV Inverse (Curve multiplier 0.00 to 600.00 in steps of 0.01 s) Definite Time (Time delay = 0.00 to 600.00 in steps of 0.01 s)
Curve timing accuracy at <0.90 x pickup:	±3.5% of operate time or ±1/2 cycle (whichever is greater) from pickup to operate
Operate time:	<30 ms at 0.9 pickup at 60 Hz for Definite Time mode

AUXILIARY UNDERVOLTAGE

Pickup level:	0.000 to 3.000 pu in steps of 0.001
Dropout level:	103% of pickup
Level accuracy:	±0.5% of reading from 10 to 208 V
Timing characteristics:	GE IAV Inverse (Curve multiplier = 0.00 to 600.00 in steps of 0.01 s); Definite Time (Time delay = 0.00 to 600.00 in steps of 0.01 s)
Curve timing accuracy at <0.90 x pickup:	±3.5% of operate time or ±1/2 cycle (whichever is greater) from pickup to operate
Operate time:	<30 ms at 0.9 pickup at 60 Hz for Definite Time mode

PHASE OVERVOLTAGE

Voltage:	Phasor only
Pickup level:	0.000 to 3.000 pu in steps of 0.001
Dropout level:	98% of pickup
Level accuracy:	±0.5% of reading from 10 to 208 V
Pickup delay:	0.00 to 600.00 in steps of 0.01 s

Operate time: <30 ms at 1.10 × pickup at 60 Hz
Timer accuracy: ±3% of operate time or ±1/4 cycle (whichever is greater)

NEUTRAL OVERVOLTAGE

Pickup level: 0.000 to 3.000 pu in steps of 0.001
Dropout level: 97% of pickup
Level accuracy: ±0.5% of reading from 10 to 208 V
Pickup delay: 0.00 to 600.00 s in steps of 0.01 (definite time) or user-defined curve
Reset delay: 0.00 to 600.00 s in steps of 0.01
Curve timing accuracy at >1.1 pickup: ±3.5% of operate time or ±1 cycle (whichever is greater) from pickup to operate
Operate time: <30 ms at 1.10 pickup at 60 Hz

AUXILIARY OVERVOLTAGE

Pickup level: 0.000 to 3.000 pu in steps of 0.001
Dropout level: 97% of pickup
Level accuracy: ±0.5% of reading from 10 to 208 V
Pickup delay: 0 to 600.00 s in steps of 0.01
Reset delay: 0 to 600.00 s in steps of 0.01
Timer accuracy: ±3% of operate time or ±1/4 cycle (whichever is greater)
Operate time: <30 ms at 1.10 × pickup at 60 Hz

NEGATIVE SEQUENCE OVERVOLTAGE

Pickup level: 0.000 to 1.250 pu in steps of 0.001
Dropout level: 97% of pickup
Level accuracy: ±0.5% of reading from 10 to 208 V
Pickup delay: 0 to 600.00 s in steps of 0.01
Reset delay: 0 to 600.00 s in steps of 0.01
Timer accuracy: ±3% of operate time or ±20 ms, whichever is greater
Operate time: <30 ms at 1.10 × pickup at 60 Hz

UNDERFREQUENCY

Minimum signal: 0.10 to 1.25 pu in steps of 0.01
Pickup level: 20.00 to 65.00 Hz in steps of 0.01
Dropout level: pickup + 0.03 Hz
Level accuracy: ±0.001 Hz
Time delay: 0 to 65.535 s in steps of 0.001
Timer accuracy: ±3% of operate time or ±1/4 cycle (whichever is greater)
Operate time: typically 4 cycles at 0.1 Hz/s change
typically 3.5 cycles at 0.3 Hz/s change
typically 3 cycles at 0.5 Hz/s change

Typical times are average operate times including variables such as frequency change instance, test method, and so on, and can vary by ±0.5 cycles.

OVERFREQUENCY

Pickup level: 20.00 to 65.00 Hz in steps of 0.01
Dropout level: pickup – 0.03 Hz
Level accuracy: ±0.001 Hz
Time delay: 0 to 65.535 s in steps of 0.001
Timer accuracy: ±3% of operate time or ±1/4 cycle (whichever is greater)
Operate time: typically 4 cycles at 0.1 Hz/s change
typically 3.5 cycles at 0.3 Hz/s change
typically 3 cycles at 0.5 Hz/s change

Typical times are average operate times including variables such as frequency change instance, test method, and so on, and can vary by ±0.5 cycles.

RATE OF CHANGE OF FREQUENCY

df/dt trend: increasing, decreasing, bi-directional
df/dt pickup level: 0.10 to 15.00 Hz/s in steps of 0.01

df/dt dropout level:	96% of pickup
df/dt level accuracy:	80 mHz/s or 3.5%, whichever is greater
Overvoltage supv.:	0.100 to 3.000 pu in steps of 0.001
Overcurrent supv.:	0.000 to 30.000 pu in steps of 0.001
Pickup delay:	0 to 65.535 s in steps of 0.001
Reset delay:	0 to 65.535 s in steps of 0.001
Timer accuracy:	±3% of operate time or ±1/4 cycle (whichever is greater)
Operate time:	typically 9.5 cycles at 2 × pickup typically 8.5 cycles at 3 × pickup typically 6.5 cycles at 5 × pickup

Typical times are average operate times including variables such as frequency change instance, test method, and so on, and can vary by ±0.5 cycles.

BREAKER FAILURE

Mode:	1-pole, 3-pole
Current supervision:	phase, neutral current
Current supv. pickup:	0.001 to 30.000 pu in steps of 0.001
Current supv. dropout:	97% of pickup
Current supv. accuracy:	
0.1 to 2.0 × CT rating:	±0.75% of reading or ±2% of rated (whichever is greater)
above 2 × CT rating:	±2.5% of reading

BREAKER ARCING CURRENT

Principle:	accumulates breaker duty (I^2t) and measures fault duration
Initiation:	programmable per phase from any FlexLogic operand
Compensation for auxiliary relays:	0 to 65.535 s in steps of 0.001
Alarm threshold:	0 to 50000 kA^2-cycle in steps of 1
Fault duration accuracy:	0.25 of a power cycle
Availability:	1 per CT bank with a minimum of 2

BREAKER FLASHOVER

Operating quantity:	phase current, voltage, and voltage difference
Pickup level voltage:	0 to 1.500 pu in steps of 0.001
Dropout level voltage:	97% of pickup
Pickup level current:	0 to 1.500 pu in steps of 0.001
Dropout level current:	97% of pickup
Level accuracy:	±0.5% or ±0.1% of rated, whichever is greater
Pickup delay:	0 to 65.535 s in steps of 0.001
Timer accuracy:	±3% of operate time or ±42 ms, whichever is greater
Operate time:	<42 ms at 1.10 × pickup at 60 Hz

BREAKER RESTRIKE

Principle:	detection of high-frequency overcurrent condition ¼ cycle after breaker opens
Availability:	one per CT/VT module (not including 8Z modules)
Pickup level:	0.1 to 2.00 pu in steps of 0.01
Reset delay:	0.000 to 65.535 s in steps of 0.001

INCIPIENT CABLE FAULT DETECTION

Principle:	detection of ½ cycle or less overcurrent condition during normal load
Availability:	two per CT/VT module (not including 8Z modules)
Pickup level:	0.1 to 10.00 pu in steps of 0.01
Reset delay:	0.000 to 65.535 s in steps of 0.001
Operating mode:	number of counts, counts per time window

SYNCHROCHECK

Max voltage difference:	0 to 400000 V in steps of 1
Max angle difference:	0 to 100° in steps of 1
Max freq. difference:	0.00 to 2.00 Hz in steps of 0.01

Hysteresis for max. freq. diff.:	0.00 to 0.10 Hz in steps of 0.01
Dead source function:	None, LV1 & DV2, DV1 & LV2, DV1 or DV2, DV1 xor DV2, DV1 & DV2 (L = Live, D = Dead)

AUTORECLOSURE

Single breaker applications, 3-pole tripping schemes
Up to four reclose attempts before lockout
Independent dead time setting before each shot
Possibility of changing protection settings after each shot with FlexLogic

LOAD ENCROACHMENT

Responds to:	Positive-sequence quantities
Minimum voltage:	0.000 to 3.000 pu in steps of 0.001
Reach (sec. Ω):	0.02 to 250.00 Ω in steps of 0.01
Impedance accuracy:	±5%
Angle:	5 to 50° in steps of 1
Angle accuracy:	±2°
Pickup delay:	0 to 65.535 s in steps of 0.001
Reset delay:	0 to 65.535 s in steps of 0.001
Timer accuracy:	±3% of operate time or ±1/4 cycle (whichever is greater)
Operate time:	<30 ms at 60 Hz

THERMAL OVERLOAD PROTECTION

Thermal overload curves:	IEC 255-8 curve
Base current:	0.20 to 3.00 pu in steps of 0.01
Overload (k) factor:	1.00 to 1.20 pu in steps of 0.05
Trip time constant:	0 to 1000 min. in steps of 1
Reset time constant:	0 to 1000 min. in steps of 1
Minimum reset time:	0 to 1000 min. in steps of 1
Timer accuracy (cold curve):	±100 ms or 2%, whichever is greater
Timer accuracy (hot curve):	±500 ms or 2%, whichever is greater for $I_p < 0.9 \times k \times I_b$ and $I / (k \times I_b) > 1.1$

TRIP BUS (TRIP WITHOUT FLEXLOGIC)

Number of elements:	6
Number of inputs:	16
Operate time:	<2 ms at 60 Hz
Timer accuracy:	±3% or 10 ms, whichever is greater

2.5.2 User-programmable elements

FLEXLOGIC

Programming language:	Reverse Polish Notation with graphical visualization (keypad programmable)
Lines of code:	512
Internal variables:	64
Supported operations:	NOT, XOR, OR (2 to 16 inputs), AND (2 to 16 inputs), NOR (2 to 16 inputs), NAND (2 to 16 inputs), latch (reset-dominant), edge detectors, timers
Inputs:	any logical variable, contact, or virtual input
Number of timers:	32
Pickup delay:	0 to 60000 (ms, sec., min.) in steps of 1
Dropout delay:	0 to 60000 (ms, sec., min.) in steps of 1
Timer accuracy:	±0.1% of operate time or ±1/8 cycle, whichever is greater

FLEXCURVES™

Number:	4 (A through D)
Reset points:	40 (0 through 1 of pickup)
Operate points:	80 (1 through 20 of pickup)
Time delay:	0 to 65535 ms in steps of 1

FLEX STATES

Number:	up to 256 logical variables grouped under 16 Modbus addresses
Programmability:	any logical variable, contact, or virtual input

FLEXELEMENTS™

Number of elements:	8
Operating signal:	any analog actual value, or two values in differential mode
Operating signal mode:	signed or absolute value
Operating mode:	level, delta
Comparator direction:	over, under
Pickup level:	–90.000 to 90.000 pu in steps of 0.001
Hysteresis:	0.1 to 50.0% in steps of 0.1
Delta dt:	20 ms to 60 days
Pickup and dropout delay:	0.000 to 65.535 s in steps of 0.001

NON-VOLATILE LATCHES

Type:	set-dominant or reset-dominant
Number:	16 (individually programmed)
Output:	stored in non-volatile memory
Execution sequence:	as input prior to protection, control, and FlexLogic

USER-PROGRAMMABLE LEDs

Number:	48 plus trip and alarm
Programmability:	from any logical variable, contact, or virtual input
Reset mode:	self-reset or latched

LED TEST

Initiation:	from any contact input or user-programmable condition
Number of tests:	3, interruptible at any time
Duration of full test:	approximately 3 minutes
Test sequence 1:	all LEDs on
Test sequence 2:	all LEDs off, one LED at a time on for 1 s
Test sequence 3:	all LEDs on, one LED at a time off for 1 s

USER-DEFINABLE DISPLAYS

Number of displays:	16
Lines of display:	2 × 20 alphanumeric characters
Parameters:	up to 5, any Modbus register addresses
Invoking and scrolling:	keypad, or any user-programmable condition, including pushbuttons

CONTROL PUSHBUTTONS

Number of pushbuttons:	7
Operation:	drive FlexLogic operands

USER-PROGRAMMABLE PUSHBUTTONS (OPTIONAL)

Number of pushbuttons:	12 on basic front panel 16 on enhanced horizontal front panel 6 on enhanced vertical front panel
Mode:	self-reset, latched
Display message:	2 lines of 20 characters each
Drop-out timer:	0.00 to 60.00 s in steps of 0.05
Autoreset timer:	0.2 to 600.0 s in steps of 0.1
Hold timer:	0.0 to 10.0 s in steps of 0.1

SELECTOR SWITCH

Number of elements:	2
Upper position limit:	1 to 7 in steps of 1
Selecting mode:	time-out or acknowledge

Time-out timer: 3.0 to 60.0 s in steps of 0.1
Control inputs: step-up and 3-bit
Power-up mode: restore from non-volatile memory or synchronize to a 3-bit control input or synch/restore mode

DIGITAL ELEMENTS
Number of elements: 48
Operating signal: any FlexLogic operand
Pickup delay: 0.000 to 999999.999 s in steps of 0.001
Dropout delay: 0.000 to 999999.999 s in steps of 0.001
Timing accuracy: ±3% or ±4 ms, whichever is greater

2.5.3 Monitoring

OSCILLOGRAPHY
Number of records: 3 to 64, configurable
Sampling rate: 8, 16, 32, or 64 samples per power cycle, configurable
Triggers: any FlexLogic operand, configurable
Trigger position: 0 to 100%, configurable
Recorded data: raw AC input channels
up to 64 configured digital channels, representing any FlexLogic operand
up to 16 configured analog channels, representing any measured analog value
Data storage: in non-volatile memory
Format: COMTRADE IEEE C37.111 (1999 or 2013)

EVENT RECORDER
Capacity: 1024 events
Time-tag: to 1 microsecond
Triggers: any FlexLogic operand, configurable
Data storage: in non-volatile memory

DATA LOGGER
Number of channels: 1 to 16
Parameters: any available analog actual value
Sampling rate: 15 to 3600000 ms in steps of 1
Trigger: any FlexLogic operand
Mode: continuous or triggered
Storage capacity: (NN is dependent on memory)
1-second rate:
01 channel for NN days
16 channels for NN days
↓
60-minute rate:
01 channel for NN days
16 channels for NN days

FAULT LOCATOR
Number of independent fault locators: 1 per CT bank to a maximum of 5
Method: single-ended
Voltage source: wye-connected VTs, delta-connected VTs and neutral voltage, delta-connected VTs and zero-sequence current (approximation)
Maximum accuracy if: fault resistance is zero and fault currents from all line terminals are approximately in phase (single-ended method)
Relay accuracy: ±1.5% (V > 10 V, I > 0.2 pu), single-ended method
Worst-case accuracy:
$VT_{\%error}$ + user data
$CT_{\%error}$ + user data
$Z_{Line\%error}$ + user data

$METHOD_{error}$ + 1.5%	single-ended method

See Theory of Operation chapter, Fault Locator section

HI-Z

Detections:	Arc Suspected, Arc Detected, Downed Conductor, Phase Identification

PHASOR MEASUREMENT UNIT

Output format:	per IEEE C37.118-2011, C37.118.1a-2014, or IEC 61850-90-5 standard
Number of channels:	14 synchrophasors, 8 analogs, 16 digitals
TVE (total vector error):	<1%
Triggering:	frequency, voltage, current, power, rate of change of frequency, user-defined
Reporting rate:	1, 2, 5, 10, 12, 15, 20, 25, 30, 50, or 60 times per second for P and M class, and 100 or 120 times per second for P class only
Number of clients:	one over TCP/IP port and one over UDP/IP per aggregator
AC ranges:	as indicated in appropriate specification sections
Network reporting format:	16-bit integer (for IEEE C37.118) or 32-bit IEEE floating point numbers
Network reporting style:	rectangular (real and imaginary for IEEE C37.188) or polar (magnitude and angle) coordinates
Post-filtering:	none, 3-point, 5-point, 7-point
Calibration:	±5° (angle) and ±5% (magnitude)

2.5.4 Metering

RMS CURRENT: PHASE, NEUTRAL, AND GROUND

Accuracy at

0.1 to 2.0 × CT rating:	±0.25% of reading or ±0.1% of rated (whichever is greater)
> 2.0 × CT rating:	±1.0% of reading

RMS VOLTAGE

Accuracy:	±0.5% of reading from 10 to 208 V

REAL POWER (WATTS)

Accuracy at 0.1 to 1.5 x CT rating and 0.8 to 1.2 x VT rating:

±1.0% of reading at $-1.0 \le PF < -0.8$ and $0.8 < PF \le 10$

REACTIVE POWER (VARS)

Accuracy at 0.1 to 1.5 x CT rating and 0.8 to 1.2 x VT rating:

±1.0% of reading at $-0.2 \le PF \le 0.2$

APPARENT POWER (VA)

Accuracy at 0.1 to 1.5 x CT rating and 0.8 to 1.2 x VT rating:

±1.0% of reading

WATT-HOURS (POSITIVE AND NEGATIVE)

Accuracy:	±2.0% of reading
Range:	±0 to 1×10^6 MWh
Parameters:	three-phase only
Update rate:	50 ms

VAR-HOURS (POSITIVE AND NEGATIVE)

Accuracy:	±2.0% of reading
Range:	±0 to 1×10^6 Mvarh
Parameters:	three-phase only
Update rate:	50 ms

CURRENT HARMONICS

Harmonics:	2nd to 25th harmonic: per phase, displayed as a % of $I(f_1)$ (current fundamental frequency phasor) THD: per phase, displayed as a % of $I(f_1)$

Accuracy:
- **HARMONICS:** with $I(f_1)$ 0.4 to 2.0 × CT rating: ±2% of reading or ±1% of 100%, whichever is greater
- **THD:** with $I(f_1)$ from 0.4 to 2.0 × CT rating: ±2% of reading or ±1% of 100% per each harmonic, whichever is greater

Accuracy applies to: 2nd to 25th harmonic including THD with a regular CT/VT module
2nd to 15th harmonic including THD with a HardFiber Process Bus Module (order code 81)

VOLTAGE HARMONICS

Harmonics: 2nd to 25th harmonic: per phase, displayed as a % of $V(f_1)$ (voltage fundamental frequency phasor)
THD: per phase, displayed as a % of $V(f_1)$

Accuracy:
- **HARMONICS:** with $V(f_1)$ 25 to 208 V: ±2% of reading or ±1% of 100%, whichever is greater
- **THD:** with $V(f_1)$ 25 to 208 V: ±2% of reading or ±1% of 100% per each harmonic, whichever is greater

Accuracy applies to: 2nd to 25th harmonic including THD with a regular CT/VT module
2nd to 15th harmonic including THD with a HardFiber Process Bus Module (order code 81)

FREQUENCY

Accuracy for 20 to 65 Hz input at
- V = 0.8 to 1.2 pu: ±0.001 Hz (when voltage signal is used for frequency measurement)
- I = 0.1 to 0.25 pu: ±0.02 Hz (when current signal is used for frequency measurement)
- I > 0.25 pu: ±0.005 Hz (when current signal is used for frequency measurement)

DEMAND

Measurements: Phases A, B, and C present and maximum measured currents
3-Phase Power (P, Q, and S) present and maximum measured currents

Accuracy: ±2.0%

2.5.5 Inputs

AC CURRENT

CT rated primary: 1 to 50000 A
CT rated secondary: 1 A or 5 A by connection
Relay burden: < 0.2 VA at rated secondary
Conversion range:
- Standard CT: 0.02 to 46 × CT rating RMS symmetrical
- Sensitive Ground CT module: 0.002 to 4.6 × CT rating RMS symmetrical

HI-Z CT module: 0.002 to 4.6 × CT rating RMS symmetrical
Current withstand: 20 ms at 250 times rated
1 sec at 100 times rated
continuous 4xInom
Short circuit rating: 150000 RMS symmetrical amperes, 250 V maximum (primary current to external CT)

AC VOLTAGE

VT rated secondary: 25.0 to 240.0 V
VT ratio: 1.00 to 24000.00
Relay burden: < 0.25 VA at 120 V
Conversion range: 1 to 275 V
Voltage withstand: continuous at 260 V to neutral
1 min/hr at 420 V to neutral

FREQUENCY

Nominal frequency setting: 25 to 60 Hz
Sampling frequency: 64 samples per power cycle
Tracking frequency range: 20 to 70 Hz

CONTACT INPUTS

Dry contacts: 1000 Ω maximum

Wet contacts:	300 V DC maximum
Selectable thresholds:	17 V, 33 V, 84 V, 166 V
Tolerance:	±10%
Contacts per common return:	4
Recognition time:	< 1 ms
Debounce time:	0.0 to 16.0 ms in steps of 0.5
Continuous current draw:	4 mA (when energized)

CONTACT INPUTS WITH AUTO-BURNISHING

Dry contacts:	1000 Ω maximum
Wet contacts:	300 V DC maximum
Selectable thresholds:	17 V, 33 V, 84 V, 166 V
Tolerance:	±10%
Contacts per common return:	2
Recognition time:	< 1 ms
Debounce time:	0.0 to 16.0 ms in steps of 0.5
Continuous current draw:	4 mA (when energized)
Auto-burnish impulse current:	50 to 70 mA
Duration of auto-burnish impulse:	25 to 50 ms

DCMA INPUTS

Current input (mA DC):	0 to –1, 0 to +1, –1 to +1, 0 to 5, 0 to 10, 0 to 20, 4 to 20 (programmable)
Input impedance:	379 Ω ±10%
Conversion range:	–1 to + 20 mA DC
Accuracy:	±0.2% of full scale
Type:	Passive

RTD INPUTS

Types (3-wire):	100 Ω Platinum, 100 and 120 Ω Nickel, 10 Ω Copper
Sensing current:	5 mA
Range:	–50 to +250°C
Accuracy:	±2°C
Isolation:	36 V pk-pk

IRIG-B INPUT

IRIG formats accepted:	B000...B007, B120...B127
IRIG control bits:	IEEE Std C37.118.1-2011
Amplitude modulation:	1 to 10 V pk-pk
DC shift:	TTL–Compatible
Input impedance:	50 kΩ
Isolation:	2 kV

DIRECT INPUTS

Input points:	32
Remote devices:	16
Default states on loss of comms.:	On, Off, Latest/Off, Latest/On
Ring configuration:	Yes, No
Data rate:	64 or 128 kbps
CRC:	32-bit
CRC alarm:	
Responding to:	Rate of messages failing the CRC
Monitoring message count:	10 to 10000 in steps of 1
Alarm threshold:	1 to 1000 in steps of 1
Unreturned message alarm:	
Responding to:	Rate of unreturned messages in the ring configuration
Monitoring message count:	10 to 10000 in steps of 1
Alarm threshold:	1 to 1000 in steps of 1

TELEPROTECTION

Input points: 16
Remote devices: 3
Default states on loss of comms.: On, Off, Latest/Off, Latest/On
Ring configuration: No
Data rate: 64 or 128 kbps
CRC: 32-bit

2.5.6 Power supply

LOW RANGE

Nominal DC voltage: 24 to 48 V
Minimum DC voltage: 20 V
Maximum DC voltage: 60 V for RL power supply module (obsolete), 75 V for SL power supply module
Voltage loss hold-up: 200 ms duration at maximum load
NOTE: Low range is DC only.

HIGH RANGE

Nominal DC voltage: 125 to 250 V
Minimum DC voltage: 88 V
Maximum DC voltage: 300 V
Nominal AC voltage: 100 to 240 V at 50/60 Hz
Minimum AC voltage: 88 V at 25 to 100 Hz
Maximum AC voltage: 265 V at 25 to 100 Hz
Voltage loss hold-up: 200 ms duration at maximum load

ALL RANGES

Volt withstand: 2 × Highest Nominal Voltage for 10 ms
Power consumption: typical = 15 to 20 W/VA
maximum = 45 W/VA
contact factory for exact order code consumption

INTERNAL FUSE

Ratings:
  Low range power supply: 8 A / 250 V
  High range power supply: 4 A / 250 V
Interrupting capacity:
  AC: 100 000 A RMS symmetrical
  DC: 10 000 A

2.5.7 Outputs

FORM-A RELAY

Make and carry for 0.2 s: 30 A as per ANSI C37.90
Carry continuous: 6 A
Break (DC inductive, L/R = 40 ms):

Voltage	Current
24 V	1 A
48 V	0.5 A
125 V	0.3 A
250 V	0.2 A

Operate time: < 4 ms
Contact material: silver alloy

LATCHING RELAY

Make and carry for 0.2 s: 30 A as per ANSI C37.90
Carry continuous: 6 A as per IEEE C37.90
Break (DC resistive as per IEC 61810-1):

Voltage	Current
24 V	6 A
48 V	1.6 A
125 V	0.4 A
250 V	0.2 A

Operate time: < 4 ms
Contact material: silver alloy
Control: separate operate and reset inputs
Control mode: operate-dominant or reset-dominant

FORM-A VOLTAGE MONITOR

Applicable voltage: approx. 15 to 250 V DC
Trickle current: approx. 1 to 2.5 mA

FORM-A CURRENT MONITOR

Threshold current: approx. 80 to 100 mA

FORM-C AND CRITICAL FAILURE RELAY

Make and carry for 0.2 s: 30 A as per ANSI C37.90
Carry continuous: 8 A
Break (DC inductive, L/R = 40 ms):

Voltage	Current
24 V	1 A
48 V	0.5 A
125 V	0.3 A
250 V	0.2 A

Operate time: < 8 ms
Contact material: silver alloy

FAST FORM-C RELAY

Make and carry: 0.1 A max. (resistive load)
Minimum load impedance:

Input voltage	Impedance	
	2 W Resistor	1 W Resistor
250 V DC	20 KΩ	50 KΩ
120 V DC	5 KΩ	2 KΩ
48 V DC	2 KΩ	2 KΩ
24 V DC	2 KΩ	2 KΩ

Note: values for 24 V and 48 V are the same due to a required 95% voltage drop across the load impedance.

Operate time: < 0.6 ms
Internal Limiting Resistor: 100 Ω, 2 W

SOLID-STATE OUTPUT RELAY

Operate and release time: <100 µs
Maximum voltage: 265 V DC
Maximum leakage current in off state

(excluding voltage monitor circuit current): 100 µA
Maximum continuous current: 5 A at 45°C; 4 A at 65°C
Make and carry:
for 0.2 s: 30 A as per ANSI C37.90
for 0.03 s: 300 A
Breaking capacity:

	UL 508	Utility application (autoreclose scheme)	Industrial application
Operations/ interval	5000 ops / 1 s-On, 9 s-Off	5 ops / 0.2 s-On, 0.2 s-Off within 1 minute	10000 ops /0.2 s-On, 30 s-Off
	1000 ops / 0.5 s-On, 0.5 s-Off		
Break capability (0 to 250 V DC)	3.2 A L/R = 10 ms	10 A L/R = 40 ms	10 A L/R = 40 ms
	1.6 A L/R = 20 ms		
	0.8 A L/R = 40 ms		

CONTROL POWER EXTERNAL OUTPUT (FOR DRY CONTACT INPUT)
Capacity: 100 mA DC at 48 V DC
Isolation: ±300 Vpk

DIRECT OUTPUTS
Output points: 32

DCMA OUTPUTS
Range: –1 to 1 mA, 0 to 1 mA, 4 to 20 mA
Max. load resistance: 12 kΩ for –1 to 1 mA range
12 kΩ for 0 to 1 mA range
600 Ω for 4 to 20 mA range
Accuracy: ±0.75% of full-scale for 0 to 1 mA range
±0.5% of full-scale for –1 to 1 mA range
±0.75% of full-scale for 0 to 20 mA range
99% Settling time to a step change: 100 ms
Isolation: 1.5 kV
Driving signal: any FlexAnalog quantity
Upper and lower limit for the driving signal: –90 to 90 pu in steps of 0.001

2.5.8 Communication protocols

IEC 61850
IEC 61850: Supports IEC 61850 Edition 2.0. See the UR Series Communications Guide and its conformance statements.

RS232
Front port: 19.2 or 115.2 kbps, Modbus RTU

RS485
1 rear port: up to 115 kbps, Modbus RTU, DNP 3, IEC 60870-5-103
Typical distance: 1200 m
Isolation: 2 kV, isolated together at 36 Vpk

FIBER ETHERNET PORT
Operates with 50/125 µm and 62.5/125 µm multimode fiber

Parameter	Fiber type
	100 Mb multimode
Wavelength	1310 nm
Connector	LC
Transmit power	–20 dBm
Receiver sensitivity	–30 dBm
Power budget	10 dB
Maximum input power	–14 dBm
Typical distance	2 km
Full duplex	yes
Redundancy	yes

ETHERNET (10/100 MB TWISTED PAIR)
Modes: 10 Mb, 10/100 Mb (auto-detect)
Connector: RJ45

SIMPLE NETWORK TIME PROTOCOL (SNTP)
Clock synchronization error: <10 ms (typical)

PRECISION TIME PROTOCOL (PTP)
PTP IEEE Std 1588-2008 (version 2)
Power Profile (PP) per IEEE Standard PC37.238-2011
Slave-only ordinary clock
Peer delay measurement mechanism

PARALLEL REDUNDANCY PROTOCOL (PRP) (IEC 62439-3 CLAUSE 4, 2012)
Ethernet ports used: 2 and 3
Networks supported: 10/100 Mb Ethernet

OTHER
TFTP, SFTP, HTTP, IEC 60870-5-104, Ethernet Global Data (EGD), IEEE C37.118

2.5.9 Inter-relay communications

SHIELDED TWISTED-PAIR INTERFACE OPTIONS

Interface type	Typical distance
RS422	1200 m
G.703	100 m

NOTE

RS422 distance is based on transmitter power and does not take into consideration the clock source provided by the user.

LINK POWER BUDGET AND MAXIMUM OPTICAL INPUT POWER

The following specifications apply to filter interface modules manufactured from January 2012.

Emitter, fiber type	Cable type	Transmit power	Received sensitivity	Power budget	Maximum optical input power
820 nm, Multimode	62.5/125 µm	-16 dBm	-32 dBm	16 dBm	-8 dBm
	50/125 µm	-20 dBm		12 dBm	
1300 nm, Multimode	62.5/125 µm	-16 dBm	-32 dBm	16 dBm	-8 dBm
	50/125 µm	-20 dBm		12 dBm	
1300 nm, Single mode	9/125 µm	-15 dBm	-32 dBm	17 dBm	-8 dBm
1300 nm Laser, Single mode	9/125 µm	0 dBm	-34 dBm	34 dBm	-8 dBm
1550 nm Laser, Single mode	9/125 µm	5 dBm	-34 dBm	39 dBm	-10 dBm

The following specifications apply to filter interface modules implemented before January 2012.

Emitter, fiber type	Transmit power	Received sensitivity	Power budget	Maximum optical input power
820 nm LED, Multimode	–20 dBm	–30 dBm	10 dB	–7.6 dBm
1300 nm LED, Multimode	–21 dBm	–30 dBm	9 dB	–11 dBm
1300 nm ELED, Single mode	–23 dBm	–32 dBm	9 dB	–14 dBm
1300 nm Laser, Single mode	–1 dBm	–30 dBm	29 dB	–14 dBm
1550 nm Laser, Single mode	+5 dBm	–30 dBm	35 dB	–14 dBm

NOTE

The power budgets are calculated from the manufacturer's worst-case transmitter power and worst case receiver sensitivity.

The power budgets for the 1300 nm ELED are calculated from the manufacturer's transmitter power and receiver sensitivity at ambient temperature. At extreme temperatures these values deviate based on component tolerance. On average, the output power decreases as the temperature is increased by a factor of 1 dB / 5 °C.

TYPICAL LINK DISTANCE

Emitter, fiber type	Cable type	Connector type	Typical distance	
			Before January 2012	From January 2012
820 nm LED, multimode	62.5/125 µm	ST	1.65 km	2 km
	50/125 µm	ST	1.65 km	2 km
1300 nm LED, multimode	62.5/125 µm	ST	4 km	5 km
	50/125 µm	ST	4 km	5 km
1300 nm ELED, single mode	9/125 µm	ST	11.4 km	20 km
1300 nm Laser, single mode	9/125 µm	ST	64 km	65 km
1550 nm Laser, single mode	9/125 µm	ST	105 km	125 km

NOTE

Typical distances listed are based on the following assumptions for system loss. As actual losses vary from one installation to another, the distance covered by your system can vary.

CONNECTOR LOSSES (TOTAL OF BOTH ENDS)

ST connector: 0.7 dB (each)

FIBER LOSSES

820 nm multimode: 3 dB/km
1300 nm multimode: 1 dB/km
1300 nm single mode: 0.35 dB/km
1550 nm single mode: 0.25 dB/km
Splice losses: one splice every 2 km at 0.05 dB loss per splice

SYSTEM MARGIN

3 dB additional loss added to calculations to compensate for all other losses.

Compensated difference in transmitting and receiving (channel asymmetry) channel delays using GPS satellite clock: 10 ms

2.5.10 Environmental

AMBIENT TEMPERATURES

Maximum operating range: –40 to 85°C
Continuous operating range: –40 to 60°C[1]

1 Based on IEC 60068-2-1 and IEC 60068-2-2, Variant Bd and Ad for 16 hrs. The UR can operate up to a surrounding ambient of 85°C, however operating outside the recommended continuous temperature range for extended periods can result in MTBF degradation and decrease the response time of the LCD.

HUMIDITY

Humidity: operating up to 95% (non-condensing) at 55°C (as per IEC60068-2-30 variant 1, 6 days)

OTHER

Altitude: 2000 m (maximum)
Pollution degree: II
Overvoltage category: II
Ingress protection: IP20 front, IP10 back (basic front panel and Rev. 1 enhanced front panel)
IP40 front, IP10 back (Rev. 2 enhanced front panel)
IP54 front with IP54 mounting collar accessory (Rev. 2 enhanced front panel)
Noise: 0 dB

2.5.11 Type tests

F60 TYPE TESTS

Test	Reference standard	Test level
Dielectric voltage withstand	EN 60255-5[1]	2.2 kV
Impulse voltage withstand	EN 60255-5[1]	5 kV
Damped oscillatory	IEC 61000-4-18 / IEC 60255-22-1	2.5 kV CM, 1 kV DM
Electrostatic discharge	EN 61000-4-2 / IEC 60255-22-2	Level 3
RF immunity	EN 61000-4-3 / IEC 60255-22-3	Level 3
Fast transient disturbance	EN 61000-4-4 / IEC 60255-22-4	Class A and B
Surge immunity	EN 61000-4-5 / IEC 60255-22-5	Level 3 and 4
Conducted RF immunity	EN 61000-4-6 / IEC 60255-22-6	Level 3
Power frequency immunity	EN 61000-4-7[1] / IEC 60255-22-7	Class A and B
Voltage interruption and ripple DC	IEC 60255-11	12% ripple, 200 ms interrupts
Radiated and conducted emissions	CISPR11 / CISPR22 / IEC 60255-25	Class A
Sinusoidal vibration	IEC 60255-21-1	Class 1
Shock and bump	IEC 60255-21-2	Class 1
Seismic	IEC 60255-21-3	Class 1
Power magnetic immunity	IEC 61000-4-8	Level 5
Pulse magnetic immunity	IEC 61000-4-9	Level 4
Damped magnetic immunity	IEC 61000-4-10	Level 4
Voltage dip and interruption	IEC 61000-4-11	0, 40, 70, 80% dips; 250 / 300 cycle interrupts
Damped oscillatory	IEC 61000-4-12[1]	2.5 kV CM, 1 kV DM
Conducted RF immunity, 0 to 150 kHz	IEC 61000-4-16	Level 4
Voltage ripple	IEC 61000-4-17	15% ripple
Ingress protection	IEC 60529[1]	IP20 front, IP10 back
Cold	IEC 60068-2-1	–40°C for 16 hours
Hot	IEC 60068-2-2	85°C for 16 hours
Humidity	IEC 60068-2-30	6 days, variant 1
Damped oscillatory	IEEE/ANSI C37.90.1	2.5 kV, 1 MHz
RF immunity	IEEE/ANSI C37.90.2	20 V/m, 80 MHz to 1 GHz
Safety	UL 508	e83849 NKCR
Safety	UL C22.2-14	e83849 NKCR7
Safety	UL 1053	e83849 NKCR
Safety	IEC 60255-27	Insulation: class 1, Pollution degree: 2, Over voltage cat II

1 Not tested by third party.

2.5.12 Production tests

THERMAL

Products go through an environmental test based upon an Accepted Quality Level (AQL) sampling process.

2.5.13 Approvals

APPROVALS

Compliance	Applicable council directive	According to
CE	Low voltage directive	EN 60255-5
	EMC directive	EN 60255-26 / EN 50263
		EN 61000-6-5
C-UL-US	---	UL 508
		UL 1053
		C22.2 No. 14

2.5.14 Maintenance

MOUNTING

Attach mounting brackets using 20 inch-pounds (±2 inch-pounds) of torque.

CLEANING

Normally, cleaning is not required. When dust has accumulated on the faceplate display, wipe with a dry cloth.

NOTICE To avoid deterioration of electrolytic capacitors, power up units that are stored in a de-energized state once per year, for one hour continuously.

F60 Feeder Protection System

Chapter 3: Installation

This chapter outlines installation of hardware and software. You unpack, check, mount, and wire the unit, then install the software and configure settings.

3.1 Unpack and inspect

Use this procedure to unpack and inspect the unit.

1. Open the relay package and check that the following items have been delivered:
   - F60
   - Mounting screws
   - GE EnerVista™ DVD (software and documentation)
   - F60 Instruction Manual (soft copy on DVD; printed copy if ordered)
   - UR Series Communications Guide (soft copy on DVD; printed copy if Instruction Manual ordered)
   - Certificate of Calibration
   - Test Report
   - EC Declaration of Conformity
   - Front panel label templates and tool
2. Inspect the unit for physical damage.
3. View the rear nameplate and verify that the correct model has been delivered. The model number is at the top right.

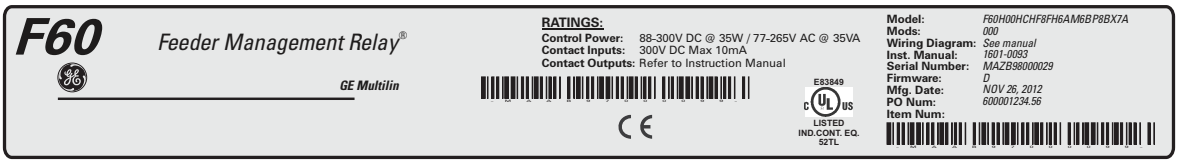

832773A3.CDR

4. For any issues, contact GE Grid Solutions as outlined in the For Further Assistance section in chapter 1.
5. Check that you have the latest copy of the F60 Instruction Manual and the UR Series Communications Guide, for the applicable firmware version, at http://www.gegridsolutions.com/multilin/manuals/index.htm

The Instruction Manual outlines how to install, configure, and use the unit. The Communications Guide is for advanced use with communication protocols. The warranty is included at the end of this instruction manual and on the GE Grid Solutions website.

3.2 Panel cutouts

This section does not apply to the HardFiber Brick; see its instruction manual.

Install the relay in an indoor environment within the environmental specifications. The relay complies with Pollution Category II, which means installation in an office, laboratory, or testing environment.

3.2.1 Horizontal units

The F60 is available as a 19-inch rack horizontal mount unit with a removable faceplate. The faceplate can be specified as either basic or enhanced at the time of ordering. The enhanced faceplate contains additional user-programmable pushbuttons and LED indicators.

The modular design allows the relay to be upgraded and repaired by qualified service personnel. The faceplate is hinged to allow access to the removable modules, and is itself removable to allow mounting on doors with limited rear depth.

In November 2017, GE began transitioning to Rev. 2 of the enhanced horizontal front panel. This panel can be identified by the use of a screw instead of a knob to close the panel. It can conform to an IP54 rating with the IP54 mounting collar purchased separately. The IP54 mounting collar can be used in panel-mount installations, not 19-inch rack-mount installations. The IP54 mounting collar cannot be used with Rev. 1 enhanced front panels.

The case dimensions are shown in the following figure, along with panel cutout details for panel mounting. When planning the location of your panel cutout, ensure that provision is made for the faceplate to swing open without interference to or from adjacent equipment.

The relay must be mounted such that the faceplate sits semi-flush with the panel or switchgear door, allowing the operator access to the keypad and the RS232 communications port. The relay is secured to the panel with the use of four screws supplied with the relay.

Figure 3-1: Horizontal dimensions (Rev. 1 enhanced front panel)

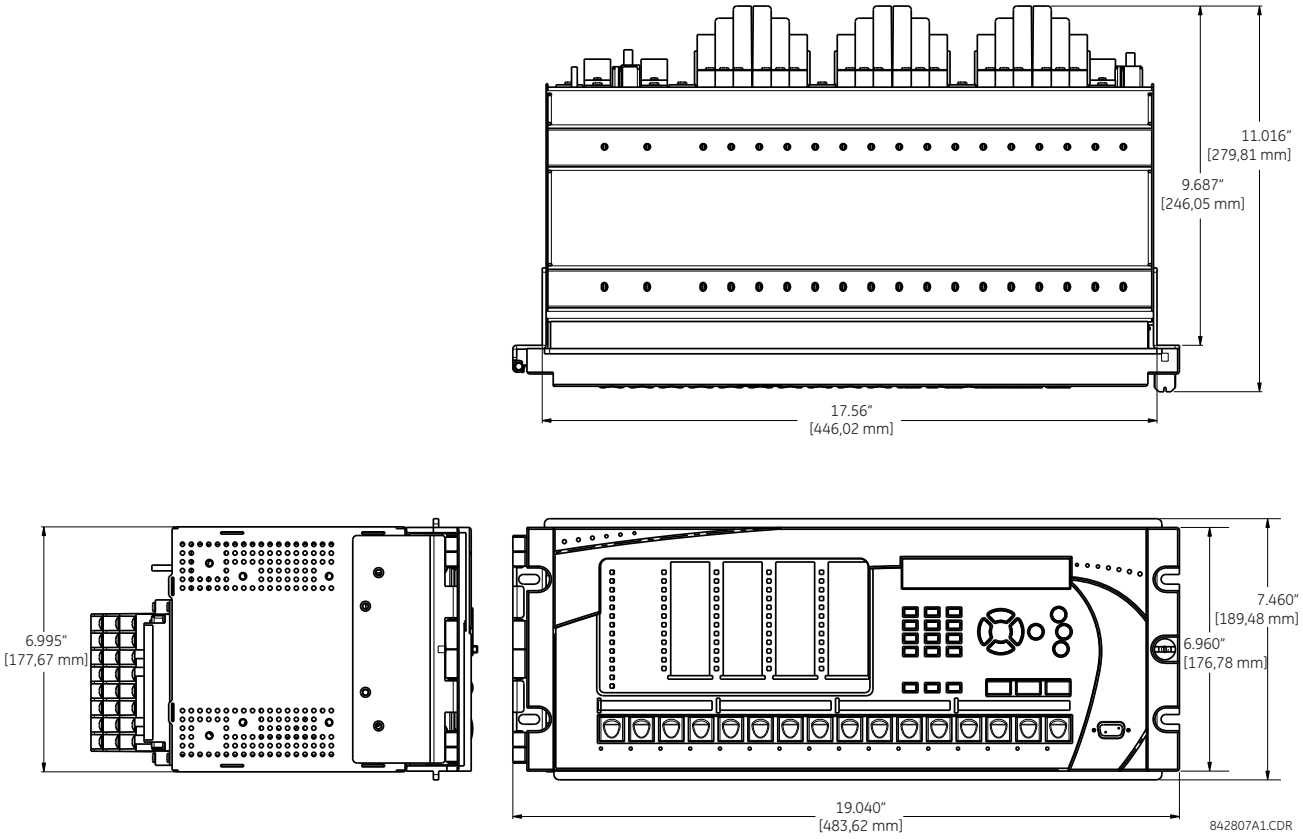

3

Figure 3-2: Horizontal dimensions (Rev. 2 enhanced front panel)

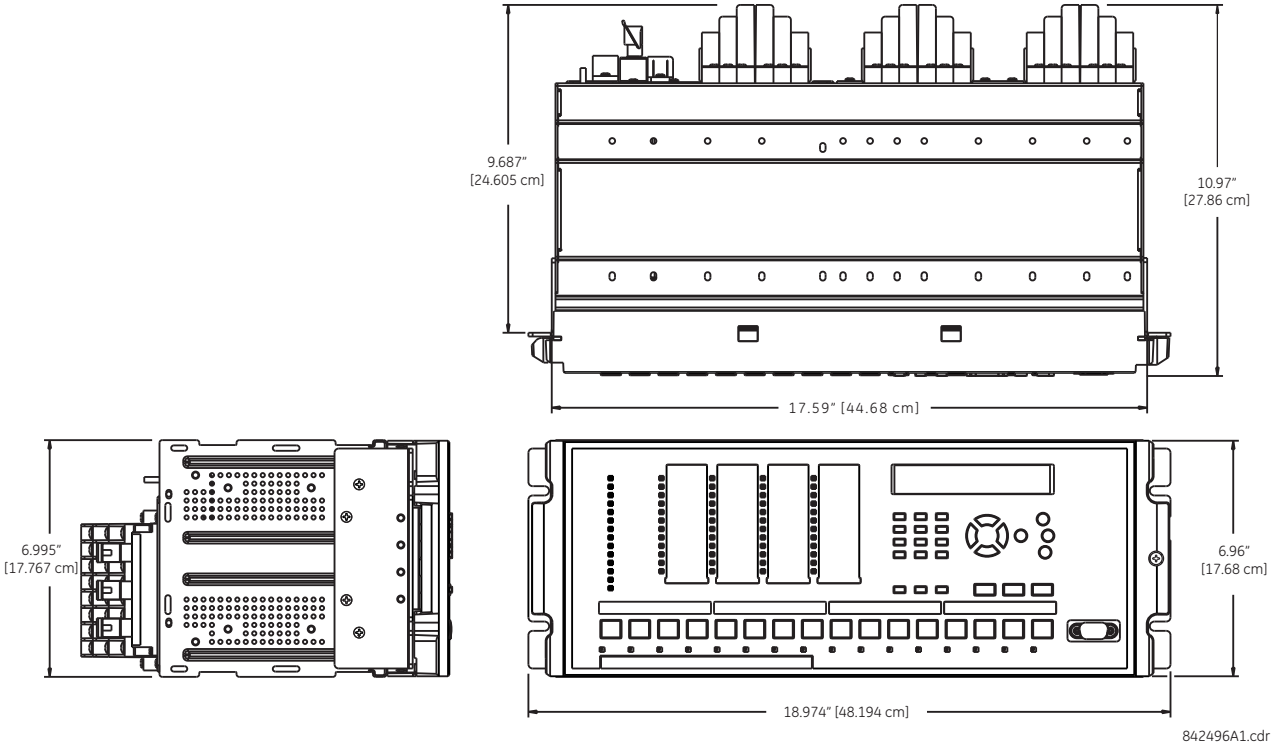

Figure 3-3: Horizontal mounting (enhanced front panel)

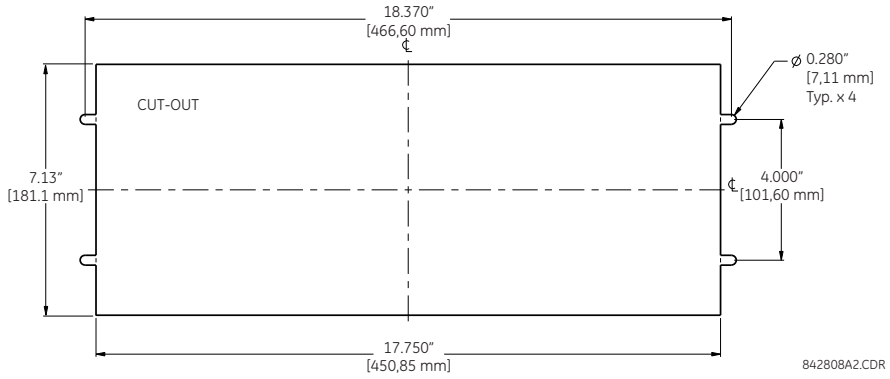

Figure 3-4: Horizontal mounting and dimensions (basic front panel)

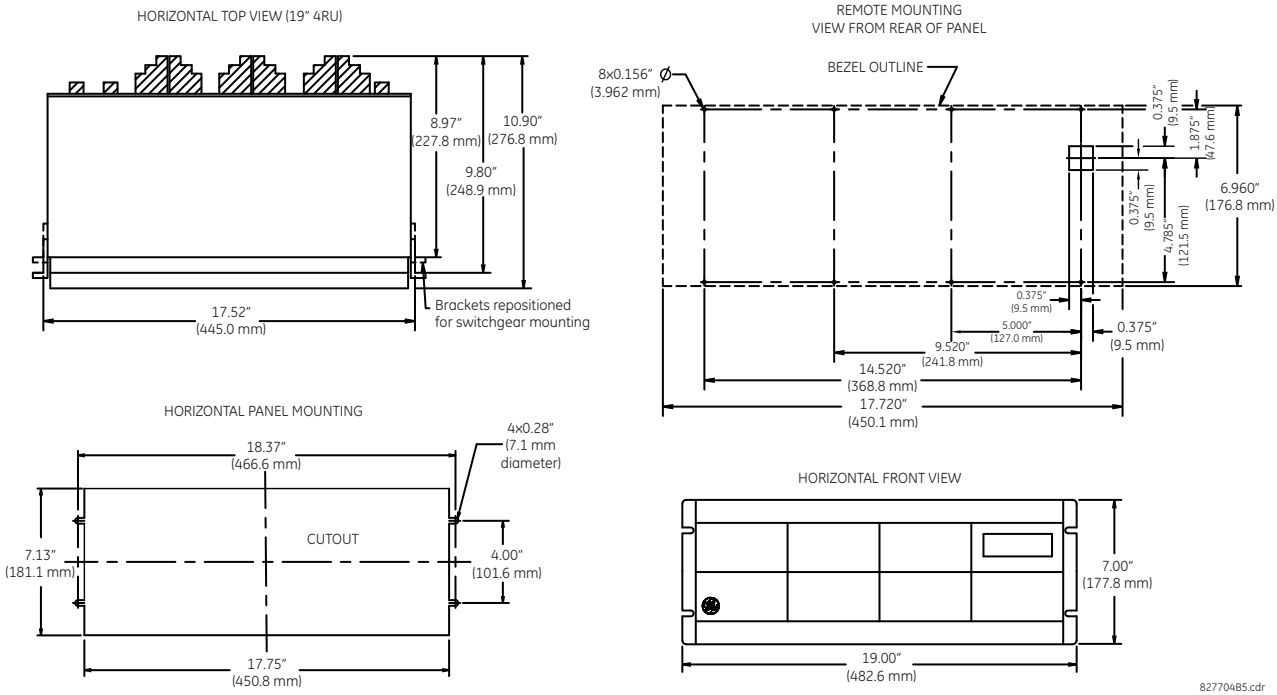

3

Figure 3-5: Horizontal dimensions (IP54 mounting collar)

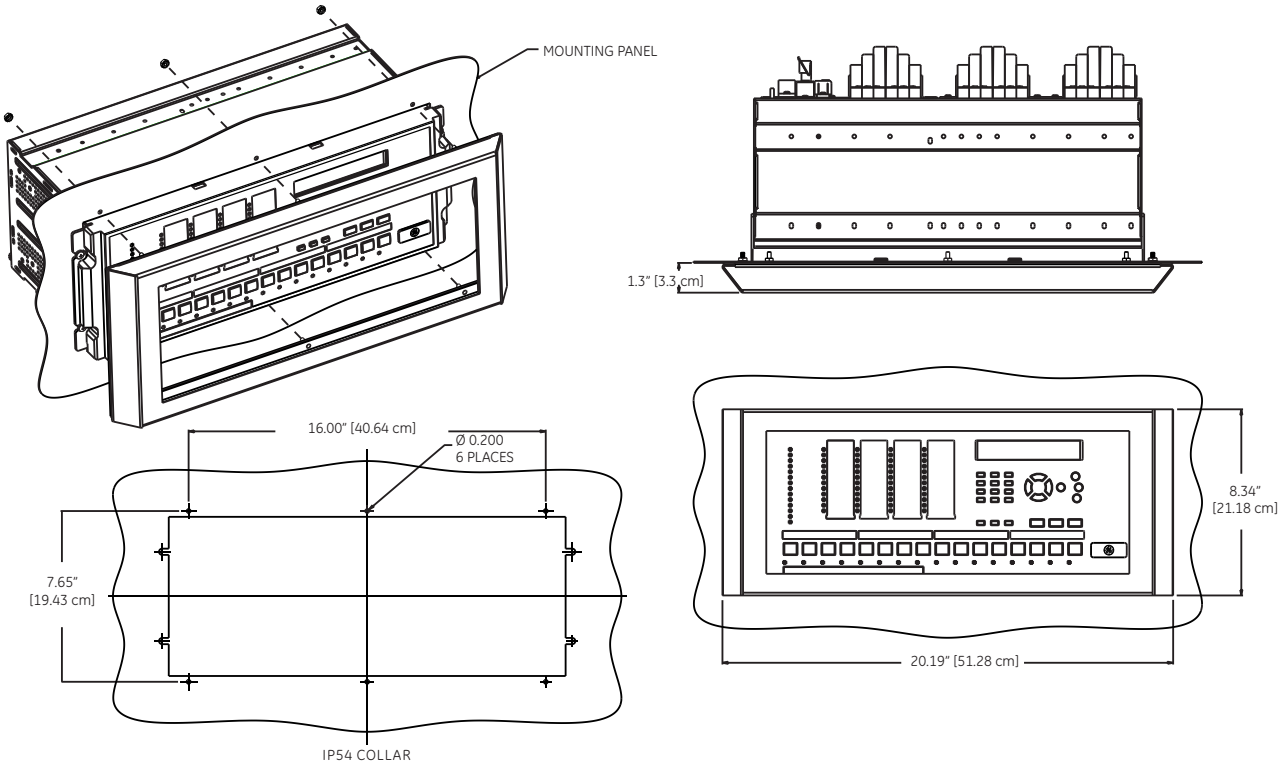

NOTES
1. INSPECT THE COLLAR BEFORE INSTALLATION, VERIFY GASKET IS ADHERED TO THE METAL ON ALL SIDES
2. MAKE SURE THE RELAY IS POSITIONED CENTER TO THE CUT OUT
3. INSTALL IP-54 COLLAR, CONFIRM THE GASKET PROPERLY MATES WITH THE PANEL ON ALL SIDES
SECURE USING #8-32 HEX NUT AT 6 PLACES.

842497A1.cdr

3.2.2 Vertical units

The F60 is available as a reduced size (¾) vertical mount unit, with a removable faceplate. The faceplate can be specified as either basic or enhanced at the time of ordering. The enhanced faceplate contains additional user-programmable pushbuttons and LED indicators.

The modular design allows the relay to be upgraded and repaired by qualified service personnel. The faceplate is hinged to allow easy access to the removable modules, and is itself removable to allow mounting on doors with limited rear depth.

The case dimensions are shown in the following figure, along with panel cutout details for panel mounting. When planning the location of your panel cutout, ensure that provision is made for the faceplate to swing open without interference to or from adjacent equipment.

The relay must be mounted such that the faceplate sits semi-flush with the panel or switchgear door, allowing the operator access to the keypad and the RS232 communications port. The relay is secured to the panel with the use of four screws supplied with the relay.

Figure 3-6: Vertical dimensions (enhanced panel)

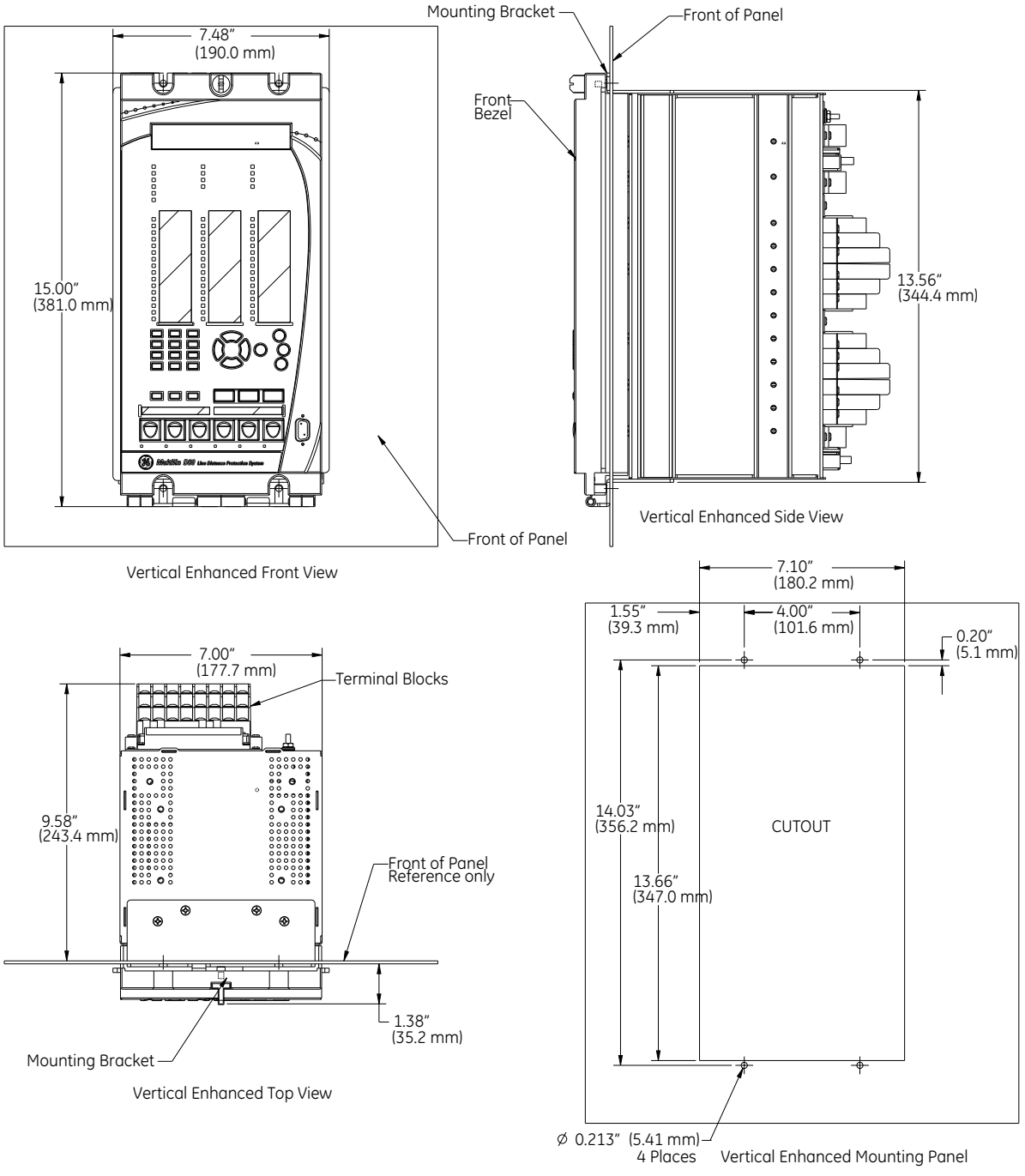

Figure 3-7: Vertical and mounting dimensions (basic panel)

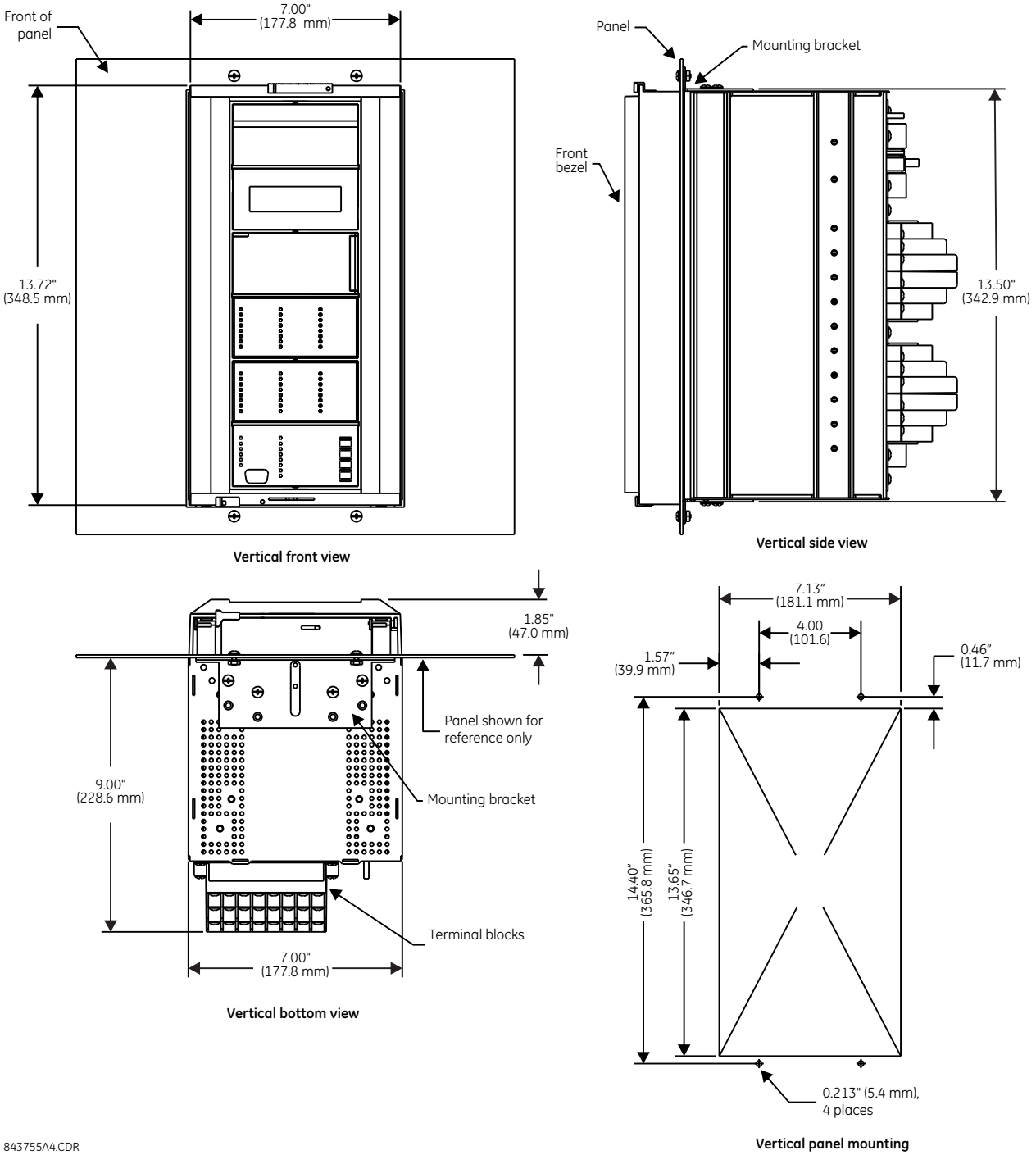

For side-mounting F60 devices with the enhanced front panel, see the following documents available on the UR DVD and the GE Grid Solutions website:

- GEK-113180 — UR-Series UR-V Side-Mounting Front Panel Assembly Instructions
- GEK-113181 — Connecting a Remote UR-V Enhanced Front Panel to a Vertical UR Device Instruction Sheet
- GEK-113182 — Connecting a Remote UR-V Enhanced Front Panel to a Vertically-Mounted Horizontal UR Device Instruction Sheet

For side-mounting F60 devices with the basic front panel, use the following figures.

Figure 3-8: Vertical side-mounting installation (basic panel)

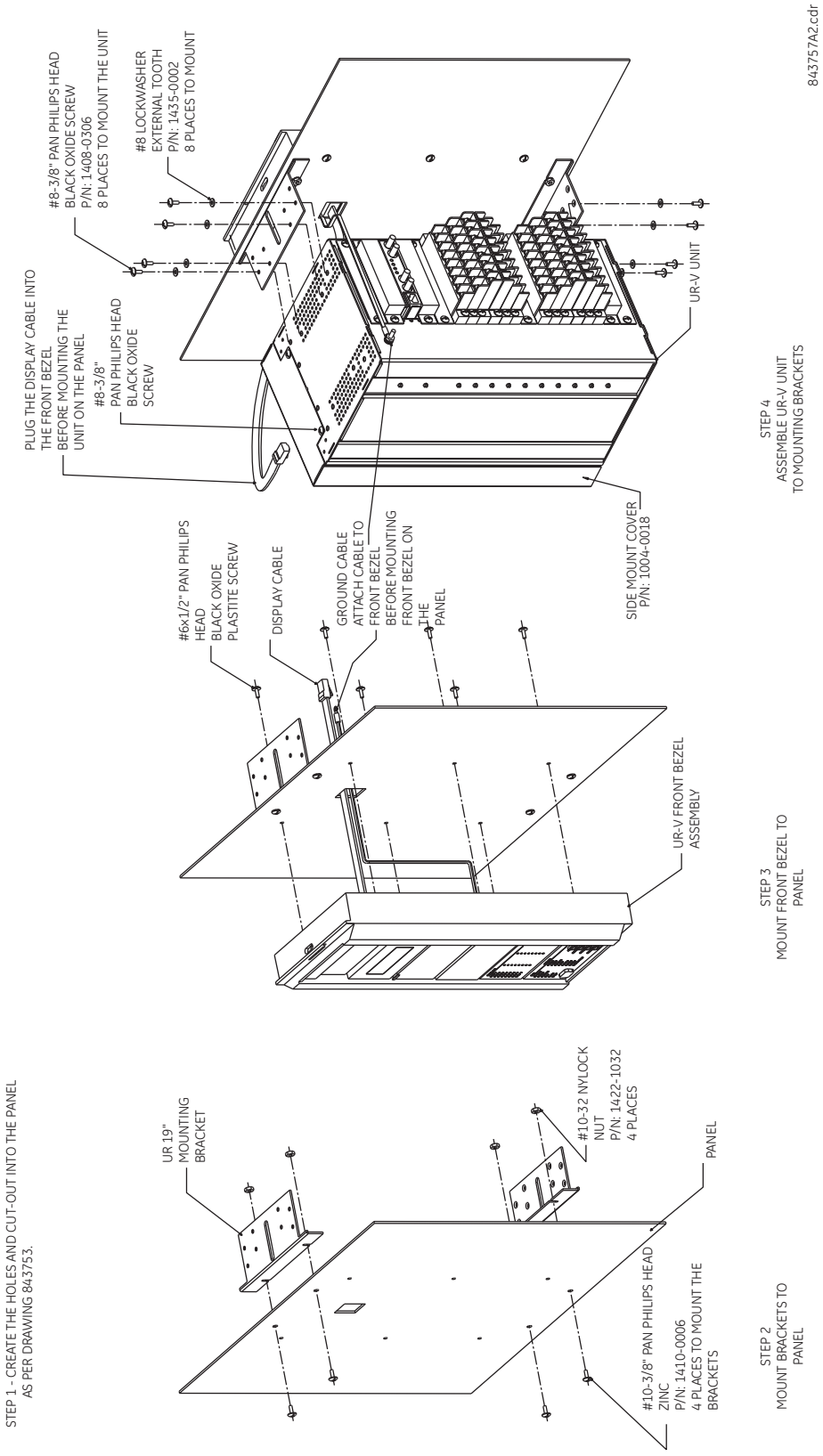

Figure 3-9: Vertical side-mounting rear dimensions (basic panel)

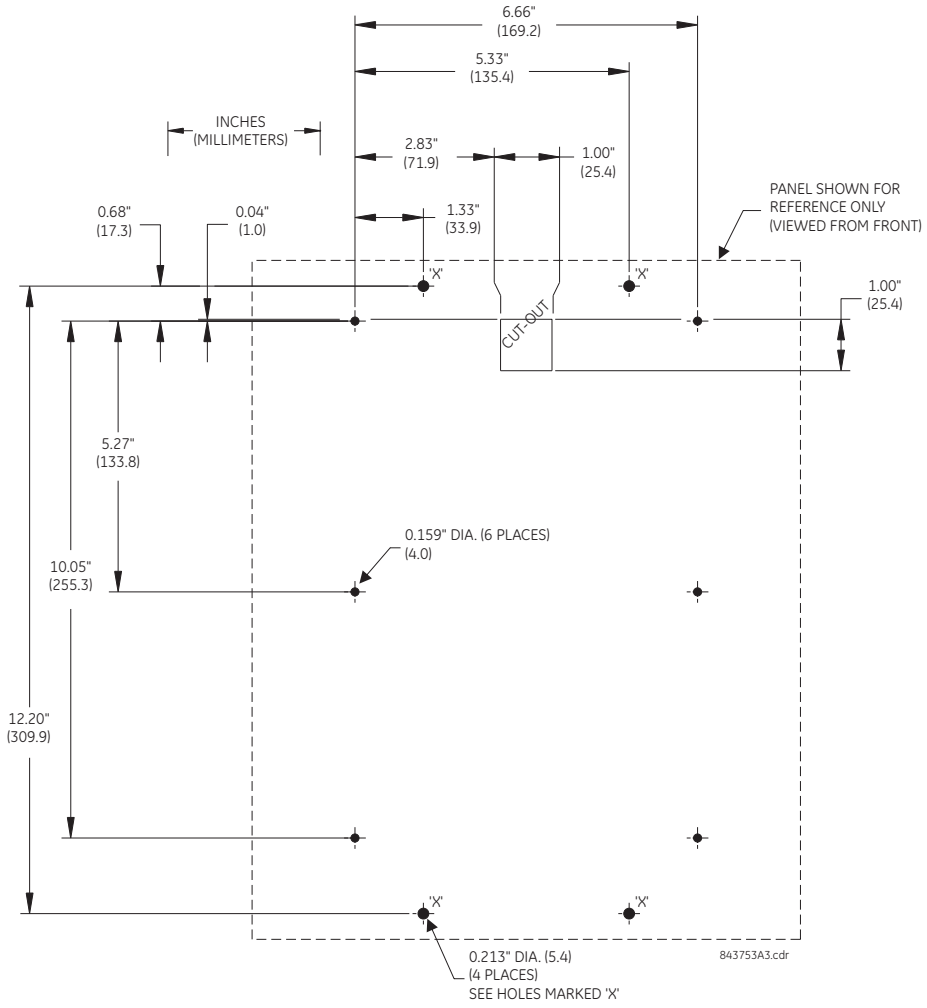

3.2.3 Rear terminal layout

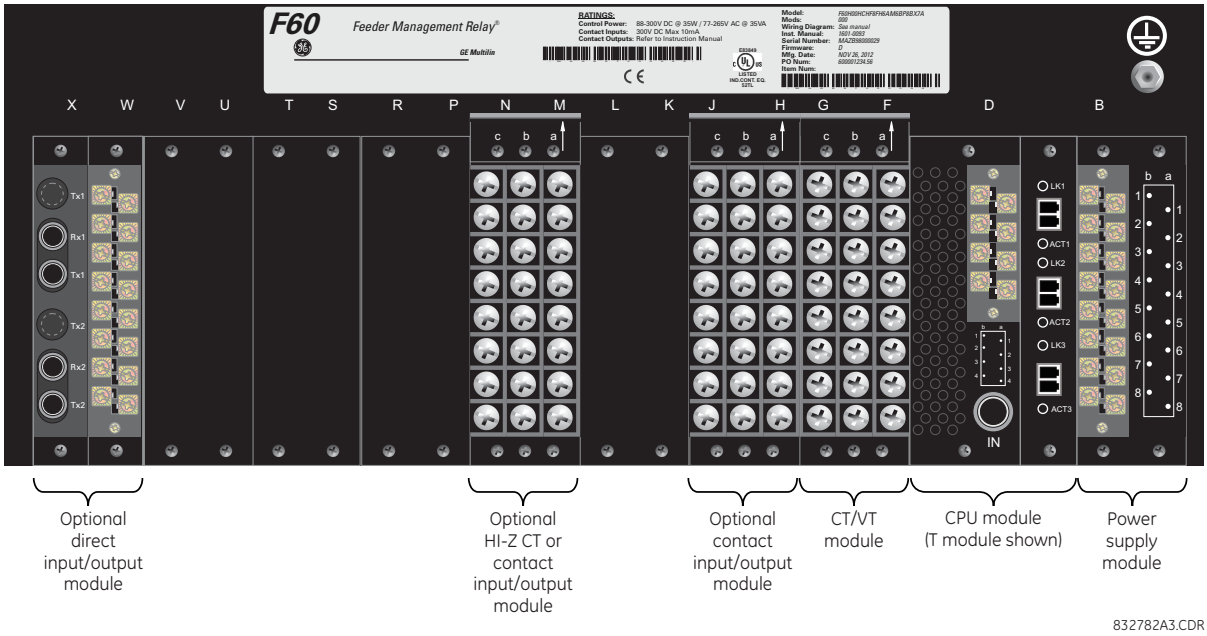

WARNING **Do not touch any rear terminals while the relay is energized, else death or serious injury can result from electrical shock.**

NOTICE The small form-factor pluggable ports (SFPs) are pluggable transceivers. Do not use non-validated transceivers or install validated transceivers in the wrong Ethernet slot, else damage can occur.

The relay follows a convention with respect to terminal number assignments, which are three characters long and assigned by module slot position, row number, and column letter. Two-slot wide modules take their slot designation from the first slot position (nearest to CPU module), indicated by an arrow marker on the terminal block. The figure shows an example of rear terminal assignments.

Figure 3-10: Example of modules in F and H slots

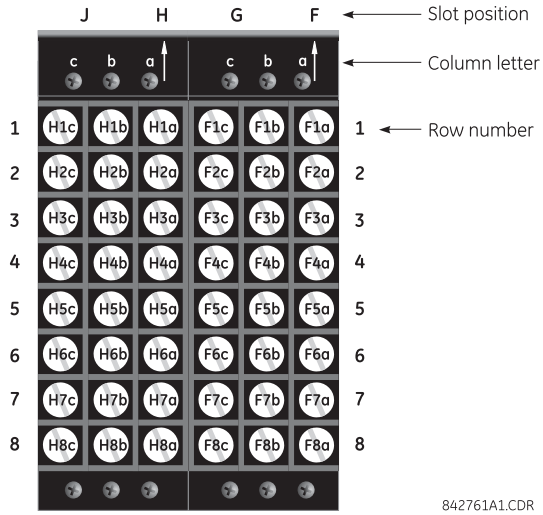

The torque used to connect the terminal blocks to the back of the relay chassis (screws a, b, c shown) is 9 inch-pounds. For the connections to the terminal blocks (rows 1 to 8), use a minimum of 17 inch-pounds. During manufacturing, the power supply and CPU modules are installed in slots B and D of the chassis with 13 inch-pounds of torque on the screws at the top and bottom of the modules.

3.3 Wiring

3.3.1 Typical wiring

Figure 3-11: Typical wiring diagram (T module shown for CPU)

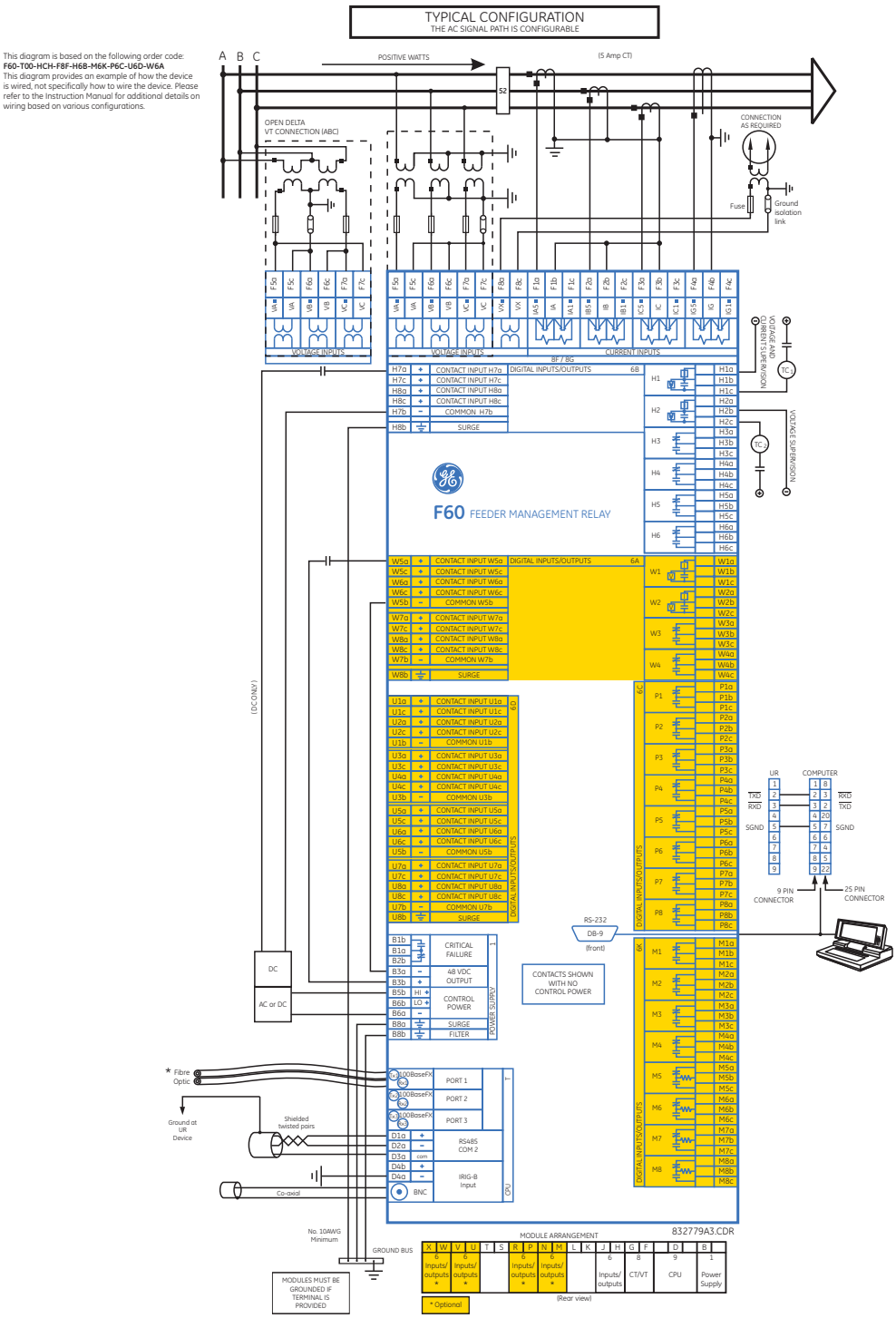

3

Figure 3-12: Typical wiring diagram with high-impedance detection (T module shown for CPU)

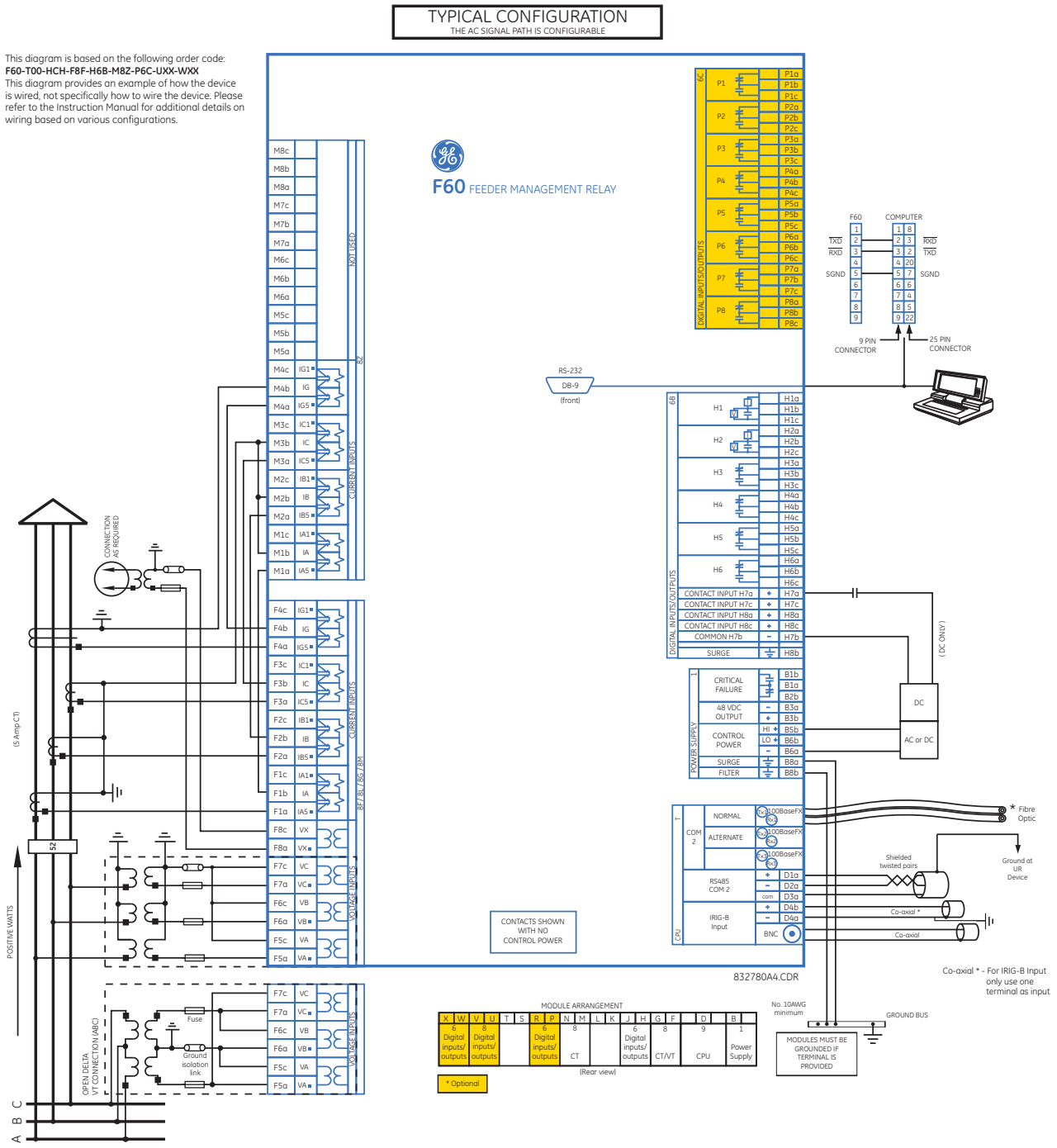

3.3.2 Dielectric strength

Dielectric strength is the maximum electric strength that can be sustained without breakdown. It is measured in volts.

The table shows the dielectric strength of the UR-series module hardware.

Table 3-1: Dielectric strength of UR series modules

Module type	Module function	Terminals		Dielectric strength
		From	To	
1	Power supply	High (+); Low (+); (–)	Chassis	2000 V AC for 1 minute
1	Power supply	48 V DC (+) and (–)	Chassis	2000 V AC for 1 minute
1	Power supply	Relay terminals except terminals 8a and 8b	Chassis	2000 V AC for 1 minute
2	Reserved	N/A	N/A	N/A
3	Reserved	N/A	N/A	N/A
4	Digital contact inputs/ outputs	All	Chassis	2000 V AC for 1 minute
5	Analog inputs/outputs	All except 8b	Chassis	< 50 V DC
6	Digital contact inputs/ outputs	All	Chassis	2000 V AC for 1 minute
7	G.703	All except 2b, 3a, 7b, 8a	Chassis	2000 V AC for 1 minute
	RS422	All except 6a, 7b, 8a	Chassis	< 50 V DC
8	CT/VT	All	Chassis	2000 V AC for 1 minute
9	CPU	All	Chassis	2000 V AC for 1 minute

NOTICE Filter networks and transient protection clamps are used in the hardware to prevent damage caused by high peak voltage transients, radio frequency interference (RFI), and electromagnetic interference (EMI). These protective components can be damaged by application of the ANSI/IEEE C37.90 specified test voltage for a period longer than the specified minute.

3.3.3 Control power

NOTICE Control power supplied to the relay must be connected to the matching power supply range of the relay. If voltage is applied to the wrong terminals, damage can occur.

The F60, like almost all electronic relays, contains electrolytic capacitors. These capacitors are well-known to deteriorate over time if voltage is not applied periodically. Deterioration can be avoided by powering up the relay at least once a year.

The power supply module can be ordered for two possible voltage ranges, and the F60 can be ordered with or without a redundant power supply module option. Each range has a dedicated input connection for proper operation. The ranges are as follows (see the Specifications section of chapter 2 for details):

- Low (LO) range — 24 to 48 V (DC only) nominal
- High (HI) range — 125 to 250 V nominal

The power supply module provides power to the relay and supplies power for dry contact input connections.

The power supply module provides 48 V DC power for dry contact input connections and a critical failure relay (see the Typical Wiring Diagram earlier). The critical failure relay is a form-C device that is energized once control power is applied and the relay has successfully booted up with no critical self-test failures. If on-going self-test diagnostic checks detect a critical failure (see the Self-Test Errors section in chapter 7) or control power is lost, the relay de-energizes.

For high-reliability systems, the F60 has a redundant option in which two F60 power supplies are placed in parallel on the bus. If one of the power supplies becomes faulted, the second power supply assumes the full load of the relay without any interruptions. Each power supply has a green LED on the front of the module to indicate that it is functional. The critical fail relay of the module also indicates a faulted power supply.

An LED on the front of the control power module shows the status of the power supply, as outlined in the table.

3

Table 3-2: Power supply LED on front panel

LED indication	Power supply
Continuous on	OK
On/off cycling	Failure
Off	Failure or no power

Figure 3-13: Control power connection

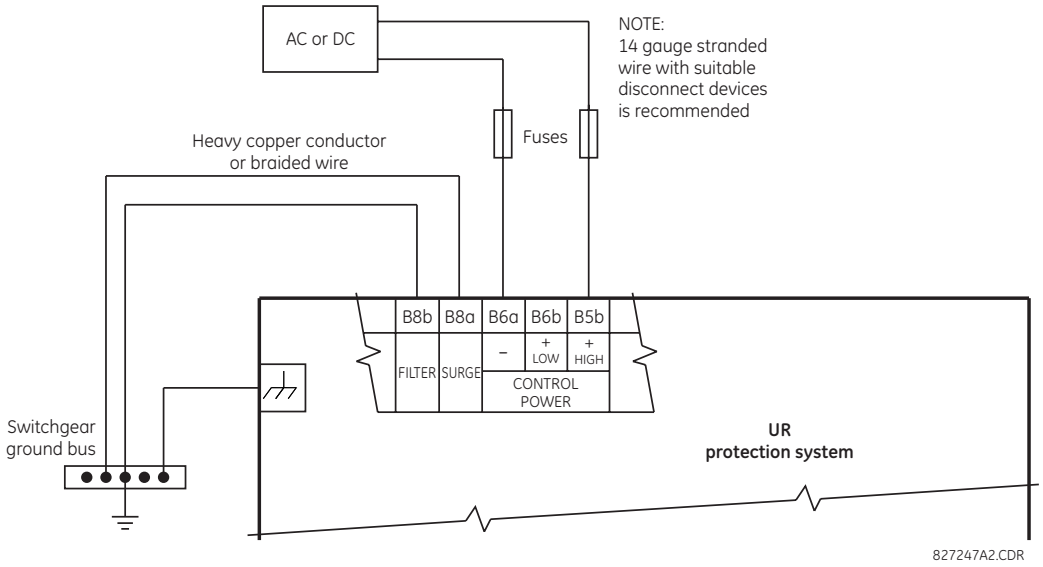

3.3.3.1 Non-volatile data storage

Non-volatile data is temporary data required after a power cycle for relay state, such as latch status before reboot. The relay saves this data in non-volatile storage every two minutes or when a state change occurs.

If a state change occurs just before a power down (less than two minutes) and the relay power is cycled, some temporary data can be saved and the prior state is retained at power up. Otherwise, a two-minute powered on period after a state change ensures that all temporary state changes required after reboot have been saved. A command also is available to initiate saving of data in the compact flash memory using **Commands > Relay Maintenance > Save Volatile Data**.

3.3.4 CT/VT modules

The CT and VT inputs are analog current transformer and voltage transformer signals used to monitor AC power lines. The UR-series relays support 1 A and 5 A CTs.

A CT/VT module can have current or voltage inputs on channels 1 through 4 inclusive, or channels 5 through 8 inclusive. Channels 1 and 5 are intended for connection to phase A, and are labeled as such in the relay. Likewise, channels 2 and 6 are intended for connection to phase B, and channels 3 and 7 are intended for connection to phase C.

Channels 4 and 8 are intended for connection to a single-phase source. For voltage inputs, these channels are labeled as auxiliary voltage (VX). For current inputs, these channels are intended for connection to a CT between system neutral and ground, and are labelled as ground current (IG).

NOTICE Verify that the connection made to the relay terminals for nominal current of 1 A or 5 A matches the secondary rating of the connected CTs. Unmatched CTs can result in equipment damage or inadequate protection.

To connect the module, size 12 American Wire Gauge (AWG) is used commonly; the maximum size is 10 AWG.

CT/VT modules can be ordered with a standard ground current input that is the same as the phase current input. Each AC current input has an isolating transformer and an automatic shorting mechanism that shorts the input when the module is withdrawn from the chassis. There are no internal ground connections on the current inputs. Current transformers with 1 to 50000 A primaries and 1 A or 5 A secondaries can be used.

CT/VT modules with a sensitive ground input are also available. The ground CT input of the sensitive ground modules is 10 times more sensitive than the ground CT input of standard CT/VT modules. However, the phase CT inputs and phase VT inputs are the same as those of regular CT/VT modules.

These modules have enhanced diagnostics that can automatically detect CT/VT hardware failure and take the relay out of service.

CT connections for both ABC and ACB phase rotations are identical, as shown in the Typical Wiring Diagram.

The exact placement of a zero-sequence core balance CT to detect ground fault current is shown as follows. Twisted-pair cabling on the zero-sequence CT is recommended.

Figure 3-14: Zero-sequence core balance CT installation

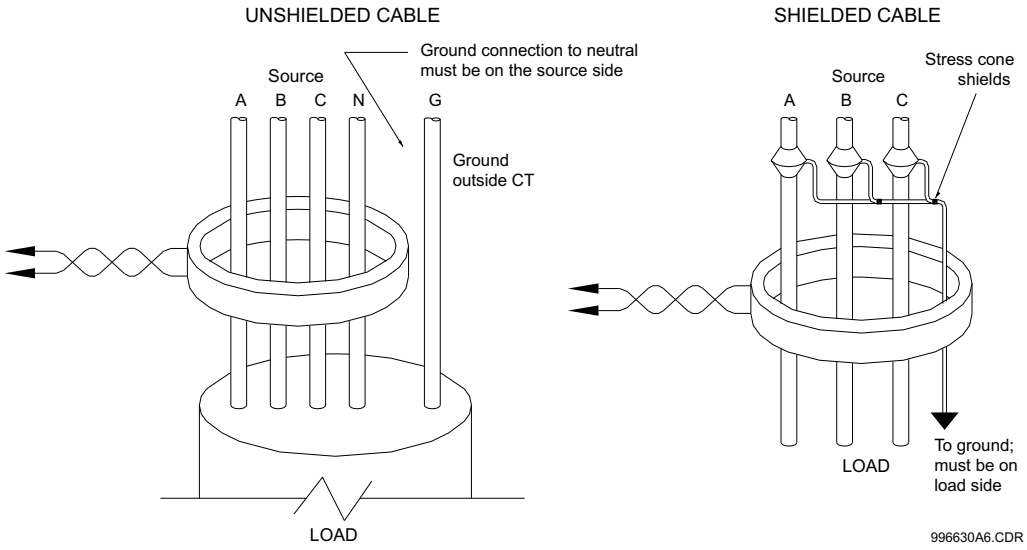

The phase voltage channels are used for most metering and protection purposes. The auxiliary voltage channel is used as input for the synchrocheck and volts-per-hertz features, which are optional features available for some UR models.

NOTE

Substitute the tilde "~" symbol with the slot position of the module in the following figure.

3

Figure 3-15: CT/VT module wiring

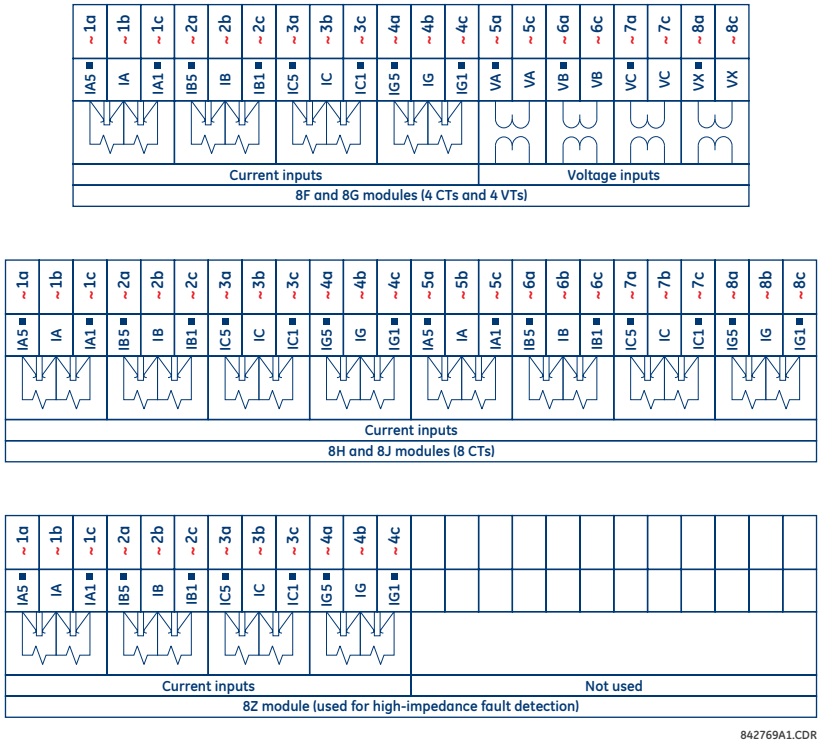

A relay configured for high impedance fault detection element includes two CT/VT modules: one type 8F, 8G, 8H, or 8J module and one type 8Z module. When 8Z is used alongside a CT/VT module with enhanced diagnostics, enhanced diagnostics is not enabled because 8Z does not offer enhanced diagnostics. For correct operation of the high impedance fault detection element, the ground current terminals of the two CT modules must be connected to a ground current source, either a zero-sequence CT (see the Typical Wiring Diagram with High Impedance Fault Detection earlier in this chapter) or, if a zero-sequence CT is not available, to the neutral conductor of the phase CTs (see diagram below).

Figure 3-16: Typical 8Z module wiring with phase CTs

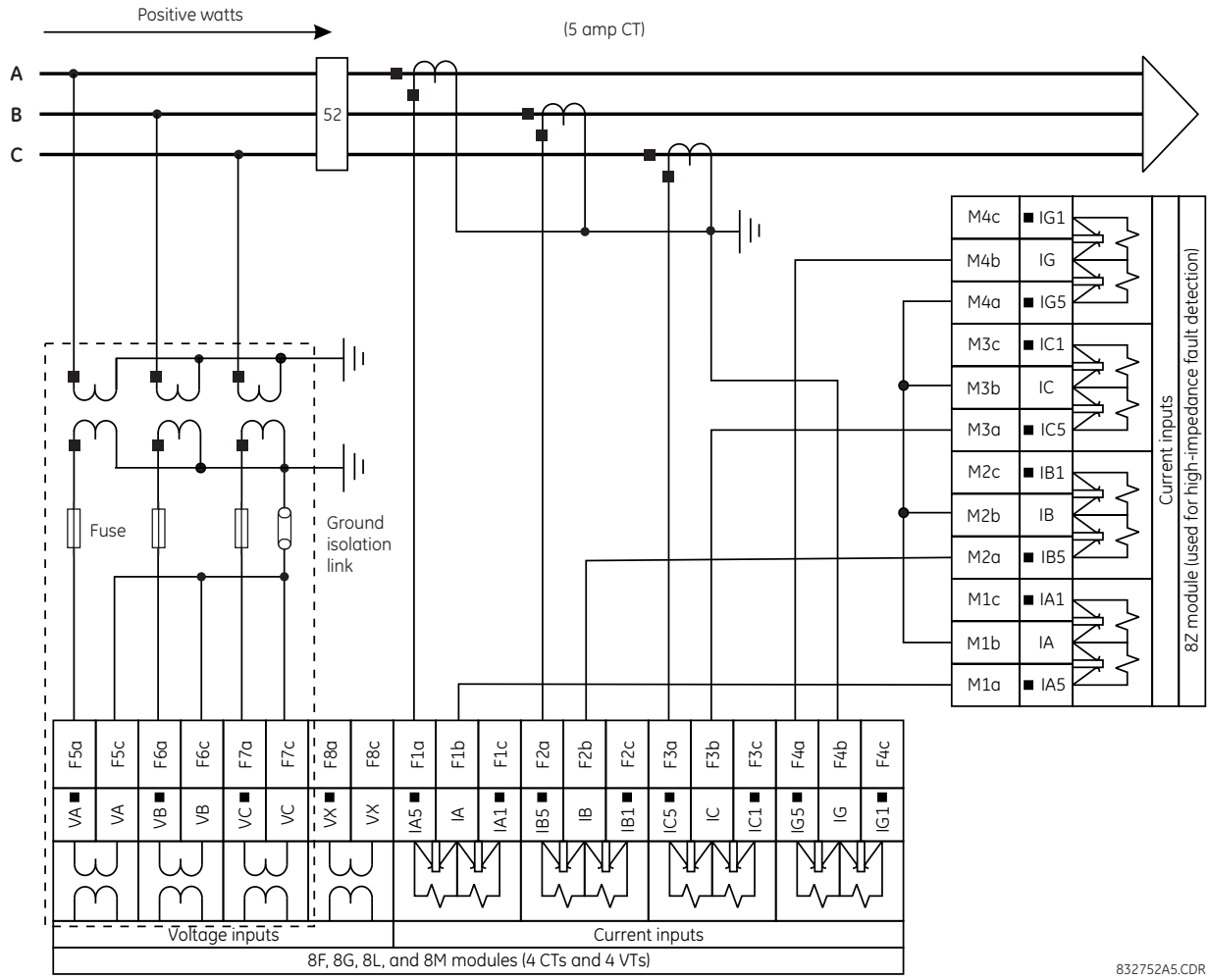

3.3.5 Process bus modules

The F60 can be ordered with a process bus interface module. The module interfaces with the HardFiber Process Bus System, or HardFiber Brick, allowing bidirectional IEC 61850 fiber optic communications with up to eight HardFiber Bricks. The HardFiber system integrates seamlessly with the existing UR-series applications, including protection functions, FlexLogic, metering, and communications.

This process bus system offers the following benefits:

- Reduces labor associated with design, installation, and testing of protection and control applications using the UR by reducing the number of individual copper terminations
- Integrates seamlessly with existing UR applications, since the IEC 61850 process bus interface module replaces the traditional CT/VT modules
- Communicates using open standard IEC 61850 messaging

For details on the HardFiber system, see its Instruction Manual.

3.3.6 Contact inputs and outputs

Every contact input/output module has 24 terminal connections. They are arranged as three terminals per row, with eight rows in total. A given row of three terminals can be used for the outputs of one relay. For example, for form-C relay outputs, the terminals connect to the normally open (NO), normally closed (NC), and common contacts of the relay. For a form-A output, there are options of using current or voltage detection for feature supervision, depending on the module ordered. The terminal configuration for contact inputs is different for the two applications.

The contact inputs are grouped with a common return. The input/output modules have two versions of grouping: four inputs per common return and two inputs per common return. When a contact input/output module is ordered, four inputs per common is used. If the inputs must be isolated per row, then two inputs per common return are selected (4D module).

The tables and diagrams on the following pages illustrate the module types (6A and so on) and contact arrangements that can be ordered for the relay. Since an entire row is used for a single contact output, the name is assigned using the module slot position and row number. However, since there are two contact inputs per row, these names are assigned by module slot position, row number, and column position.

Some form-A / solid-state relay outputs include circuits to monitor the DC voltage across the output contact when it is open, and the DC current through the output contact when it is closed. Each of the monitors contains a level detector whose output is set to logic "On" when the current in the circuit is above the threshold setting. The voltage monitor is set to "On" when there is a voltage across open contact (the detector allows a current of about 1 to 2.5 mA), and the current monitor is set to "On" when the current flowing through the closed contact exceeds about 80 to 100 mA. The voltage monitor is intended to check the health of the overall trip circuit, and the current monitor can be used to seal-in the output contact until an external contact has interrupted current flow. If enabled, the current monitoring can be used as a seal-in signal to ensure that the form-A contact does not attempt to break the energized inductive coil circuit and weld the output contacts.

Block diagrams are shown as follows for form-A and solid-state relay outputs with optional voltage monitor, optional current monitor, and with no monitoring. The actual values shown for contact output 1 are the same for all contact outputs. Form-A contact output with or without a current or voltage monitoring option is not polarity sensitive. The polarity shown in the figure is required for solid-state contact output connection.

Figure 3-17: Form-A and solid-state contact outputs with voltage and current monitoring

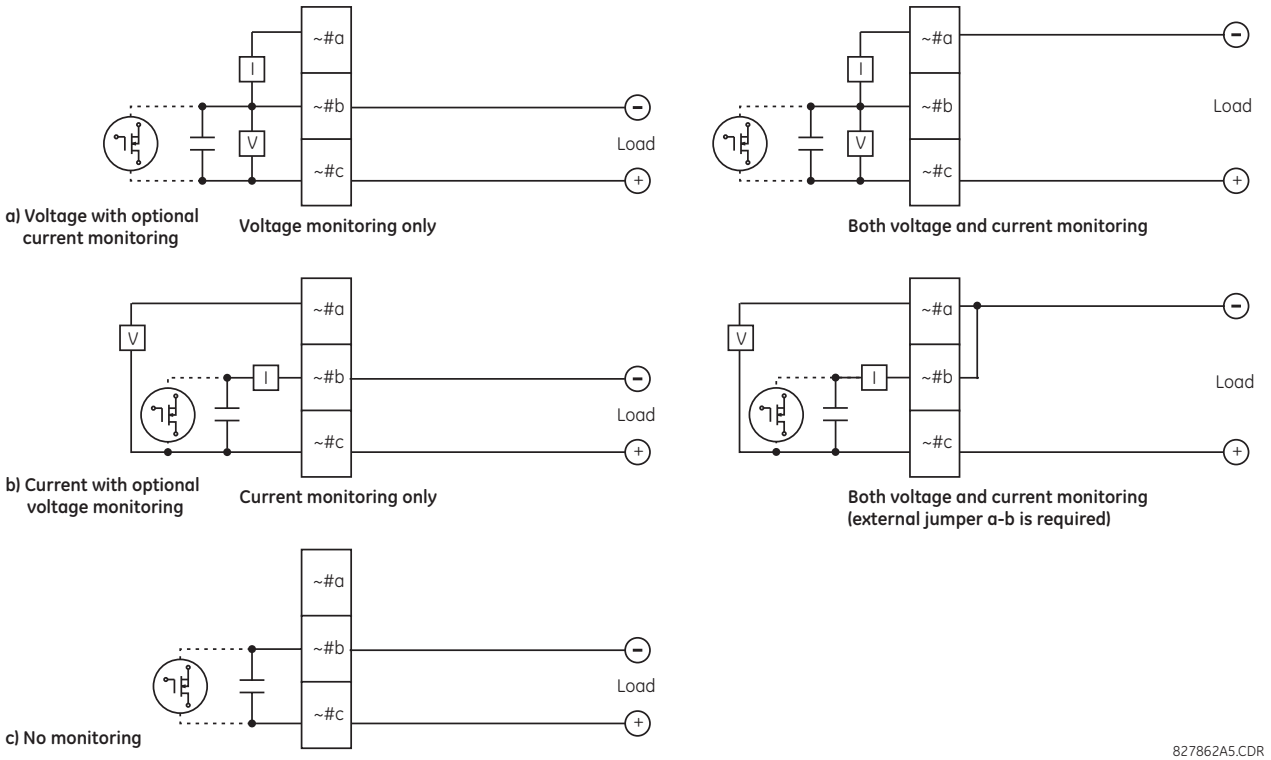

The operation of voltage and current monitors is reflected with the corresponding FlexLogic operands (CONT OP # VON, CONT OP # VOFF, and CONT OP # ION) that can be used in protection, control, and alarm logic. The typical application of the voltage monitor is breaker trip circuit integrity monitoring; a typical application of the current monitor is seal-in of the control command.

See the Digital Elements section of chapter 5 for an example of how form-A and solid-state relay contacts can be applied for breaker trip circuit integrity monitoring.

WARNING **Consider relay contacts unsafe to touch when the unit is energized. Death or serious injury can result from touching live relay contacts.**

NOTE

USE OF FORM-A AND SOLID-STATE RELAY OUTPUTS IN HIGH-IMPEDANCE CIRCUITS

For form-A and solid-state relay output contacts internally equipped with a voltage measuring circuit across the contact, the circuit has an impedance that can cause a problem when used in conjunction with external high-input impedance monitoring equipment such as modern relay test set trigger circuits. These monitoring circuits can continue to read the form-A contact as being closed after it has closed and subsequently opened, when measured as an impedance.

The solution is to use the voltage measuring trigger input of the relay test set, and connect the form-A contact through a voltage-dropping resistor to a DC voltage source. If the 48 V DC output of the power supply is used as a source, a 500 Ω, 10 W resistor is appropriate. In this configuration, the voltage across either the form-A contact or the resistor can be used to monitor the state of the output.

NOTE

Where a tilde "~" symbol appears, substitute the slot position of the module. Where a number sign "#" appears, substitute the contact number.

NOTICE When current monitoring is used to seal-in the form-A and solid-state relay contact outputs, give the FlexLogic operand driving the contact output a reset delay of 10 ms to prevent damage of the output contact (in situations when the element initiating the contact output is bouncing, at values in the region of the pickup value).

Table 3-3: Contact input and output module assignments

~6A module	
Terminal assignment	**Output or input**
~1	Form-A
~2	Form-A
~3	Form-C
~4	Form-C
~5a, ~5c	2 Inputs
~6a, ~6c	2 Inputs
~7a, ~7c	2 Inputs
~8a, ~8c	2 Inputs

~6B module	
Terminal assignment	**Output or input**
~1	Form-A
~2	Form-A
~3	Form-C
~4	Form-C
~5	Form-C
~6	Form-C
~7a, ~7c	2 Inputs
~8a, ~8c	2 Inputs

~6C module	
Terminal assignment	**Output**
~1	Form-C
~2	Form-C
~3	Form-C
~4	Form-C
~5	Form-C
~6	Form-C
~7	Form-C
~8	Form-C

~6D module	
Terminal assignment	**Output**
~1a, ~1c	2 Inputs
~2a, ~2c	2 Inputs
~3a, ~3c	2 Inputs
~4a, ~4c	2 Inputs
~5a, ~5c	2 Inputs
~6a, ~6c	2 Inputs
~7a, ~7c	2 Inputs
~8a, ~8c	2 Inputs

~6E module	
Terminal assignment	**Output or input**
~1	Form-C
~2	Form-C
~3	Form-C

~6F module	
Terminal assignment	**Output**
~1	Fast Form-C
~2	Fast Form-C
~3	Fast Form-C

~6G module	
Terminal assignment	**Output or input**
~1	Form-A
~2	Form-A
~3	Form-A

~6H module	
Terminal assignment	**Output or input**
~1	Form-A
~2	Form-A
~3	Form-A

~6E module	
Terminal assignment	**Output or input**
~4	Form-C
~5a, ~5c	2 Inputs
~6a, ~6c	2 Inputs
~7a, ~7c	2 Inputs
~8a, ~8c	2 Inputs

~6F module	
Terminal assignment	**Output**
~4	Fast Form-C
~5	Fast Form-C
~6	Fast Form-C
~7	Fast Form-C
~8	Fast Form-C

~6G module	
Terminal assignment	**Output or input**
~4	Form-A
~5a, ~5c	2 Inputs
~6a, ~6c	2 Inputs
~7a, ~7c	2 Inputs
~8a, ~8c	2 Inputs

~6H module	
Terminal assignment	**Output or input**
~4	Form-A
~5	Form-A
~6	Form-A
~7a, ~7c	2 Inputs
~8a, ~8c	2 Inputs

~6K module	
Terminal assignment	**Output**
~1	Form-C
~2	Form-C
~3	Form-C
~4	Form-C
~5	Fast Form-C
~6	Fast Form-C
~7	Fast Form-C
~8	Fast Form-C

~6L module	
Terminal assignment	**Output or input**
~1	Form-A
~2	Form-A
~3	Form-C
~4	Form-C
~5a, ~5c	2 Inputs
~6a, ~6c	2 Inputs
~7a, ~7c	2 Inputs
~8a, ~8c	2 Inputs

~6M module	
Terminal assignment	**Output or input**
~1	Form-A
~2	Form-A
~3	Form-C
~4	Form-C
~5	Form-C
~6	Form-C
~7a, ~7c	2 Inputs
~8a, ~8c	2 Inputs

~6N module	
Terminal assignment	**Output or input**
~1	Form-A
~2	Form-A
~3	Form-A
~4	Form-A
~5a, ~5c	2 Inputs
~6a, ~6c	2 Inputs
~7a, ~7c	2 Inputs
~8a, ~8c	2 Inputs

~6P module	
Terminal assignment	**Output or input**
~1	Form-A
~2	Form-A
~3	Form-A
~4	Form-A
~5	Form-A
~6	Form-A
~7a, ~7c	2 Inputs
~8a, ~8c	2 Inputs

~6R module	
Terminal assignment	**Output or input**
~1	Form-A
~2	Form-A
~3	Form-C
~4	Form-C
~5a, ~5c	2 Inputs
~6a, ~6c	2 Inputs
~7a, ~7c	2 Inputs
~8a, ~8c	2 Inputs

~6S module	
Terminal assignment	**Output or input**
~1	Form-A
~2	Form-A
~3	Form-C
~4	Form-C
~5	Form-C
~6	Form-C
~7a, ~7c	2 Inputs
~8a, ~8c	2 Inputs

~6T module	
Terminal assignment	**Output or input**
~1	Form-A
~2	Form-A
~3	Form-A
~4	Form-A
~5a, ~5c	2 Inputs
~6a, ~6c	2 Inputs
~7a, ~7c	2 Inputs
~8a, ~8c	2 Inputs

~6U module	
Terminal assignment	**Output or input**
~1	Form-A
~2	Form-A
~3	Form-A
~4	Form-A
~5	Form-A
~6	Form-A
~7a, ~7c	2 Inputs
~8a, ~8c	2 Inputs

~6V module	
Terminal assignment	**Output or input**
~1	Form-A
~2	Form-A
~3	Form-C
~4	2 Outputs
~5a, ~5c	2 Inputs
~6a, ~6c	2 Inputs
~7a, ~7c	2 Inputs
~8a, ~8c	2 Inputs

~67 module	
Terminal assignment	**Output**
~1	Form-A
~2	Form-A
~3	Form-A
~4	Form-A
~5	Form-A
~6	Form-A
~7	Form-A
~8	Form-A

~4A module	
Terminal assignment	**Output**
~1	Not Used
~2	Solid-State
~3	Not Used
~4	Solid-State
~5	Not Used
~6	Solid-State
~7	Not Used
~8	Solid-State

~4B module	
Terminal assignment	**Output**
~1	Not Used
~2	Solid-State
~3	Not Used
~4	Solid-State
~5	Not Used
~6	Solid-State
~7	Not Used
~8	Solid-State

~4C module	
Terminal assignment	**Output**
~1	Not Used
~2	Solid-State
~3	Not Used
~4	Solid-State
~5	Not Used
~6	Solid-State
~7	Not Used
~8	Solid-State

~4D module	
Terminal assignment	**Output**
~1a, ~1c	2 Inputs
~2a, ~2c	2 Inputs
~3a, ~3c	2 Inputs
~4a, ~4c	2 Inputs
~5a, ~5c	2 Inputs
~6a, ~6c	2 Inputs
~7a, ~7c	2 Inputs
~8a, ~8c	2 Inputs

~4L module	
Terminal assignment	**Output**
~1	2 Outputs
~2	2 Outputs
~3	2 Outputs
~4	2 Outputs
~5	2 Outputs
~6	2 Outputs
~7	2 Outputs
~8	Not Used

Figure 3-18: Contact input and output module wiring (Sheet 1 of 2)

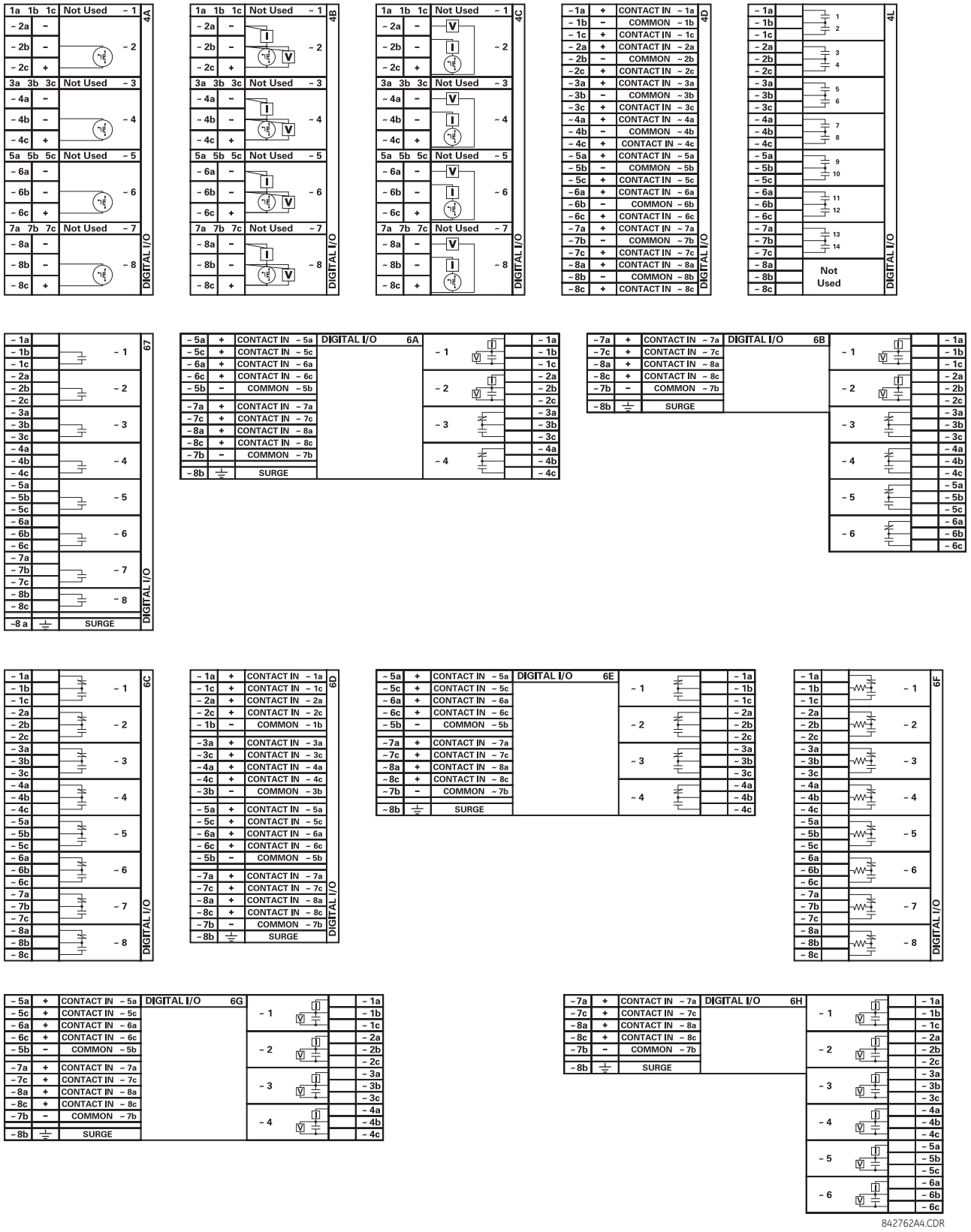

842762A4.CDR

Figure 3-19: Contact input and output module wiring (Sheet 2 of 2)

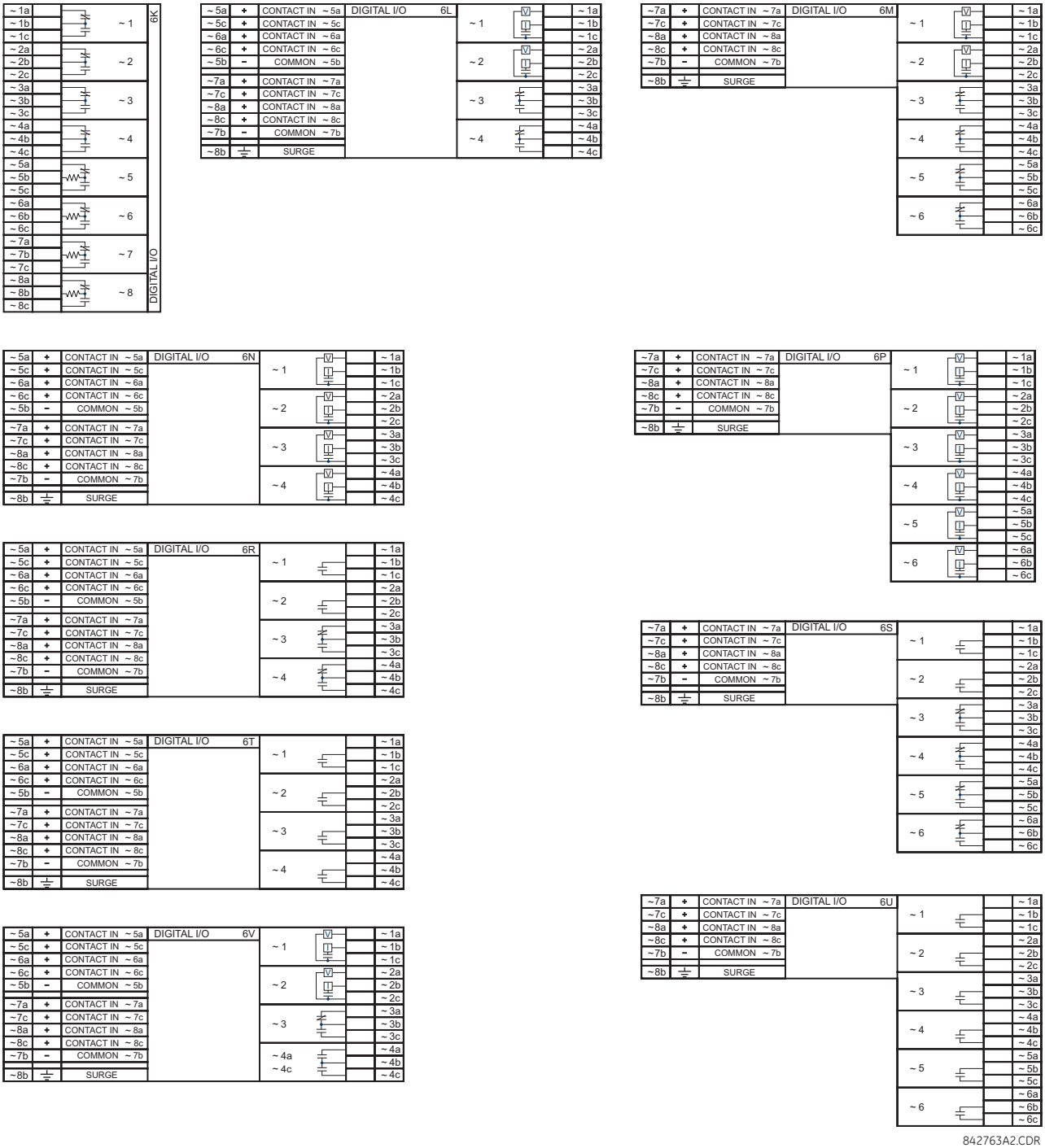

NOTICE For proper functionality, observe the polarity shown in the figures for all contact input and output connections.

3.3.6.1 Contact inputs

A dry contact has one side connected to terminal B3b. This is the positive 48 V DC voltage rail supplied by the power supply module. The other side of the dry contact is connected to the required contact input terminal. Each contact input group has its own common (negative) terminal that must be connected to the DC negative terminal (B3a) of the power supply module. When a dry contact closes, a current of 1 to 3 mA flows through the associated circuit.

A wet contact has one side connected to the positive terminal of an external DC power supply. The other side of this contact is connected to the required contact input terminal. If a wet contact is used, then the negative side of the external source must be connected to the relay common (negative) terminal of each contact group. The maximum external source voltage for this arrangement is 300 V DC.

The voltage threshold at which each group of four contact inputs detects a closed contact input is programmable as 17 V DC for 24 V sources, 33 V DC for 48 V sources, 84 V DC for 110 to 125 V sources, and 166 V DC for 250 V sources.

Figure 3-20: Dry and wet contact input connections

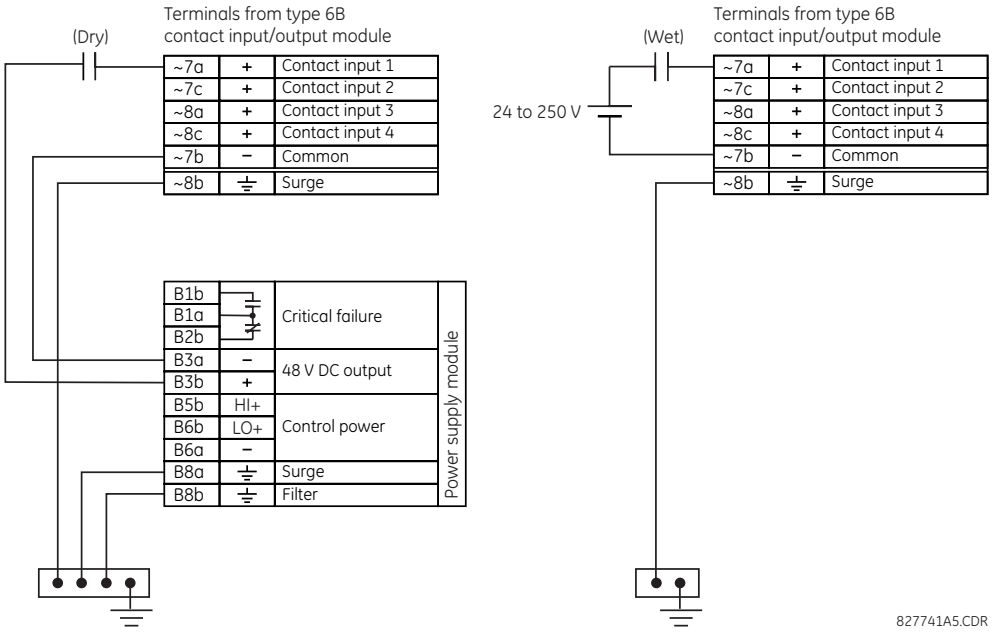

NOTE

Where a tilde "~" symbol appears, substitute the slot position of the module.

There is no provision in the relay to detect a DC ground fault on 48 V DC control power external output. We recommend using an external DC supply.

3.3.6.2 General application considerations

Contacts outputs of protective relays, auxiliary contacts from breakers, disconnectors and other devices, are generally connected to contacts inputs of protective relays. In some situations, the contact outputs of some protective relays can have high impedance connected across it. When such a contact output is connected across a F60 contact input, it can spuriously operate the F60 input even when the output is open, if there is a substantial distributed capacitance (represented by C1) present in the wiring between the output and the F60 input and the debounce time setting in the F60 relay is low enough. This false assertion of the contact input, when there is inadvertent ground present at the DC positive terminal, can be prevented by inserting a resistor across the F60 input.

The following figure shows a typical DC circuit, with battery ground detection, of contact input. The contact output has parallel impedance across it (represented by R1).

Figure 3-21: Typical contact input DC circuit

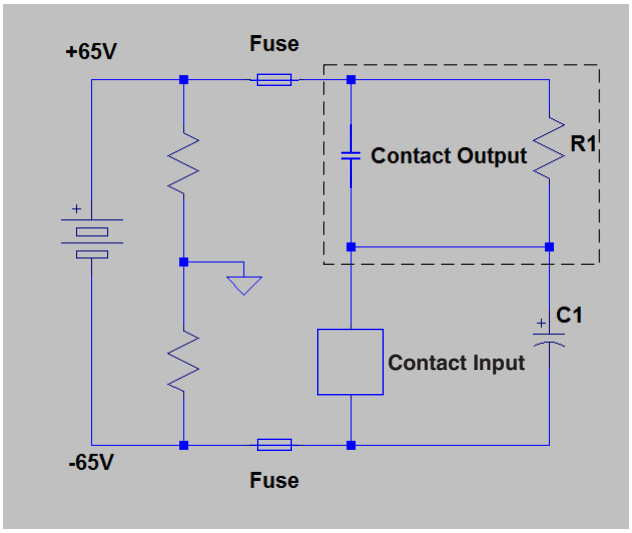

The presence of the impedance path (R1) across the contact output allows the stray (distributed) capacitance C1 to charge as shown, thus developing a voltage across the contact input enough to momentarily operate the input while the capacitance discharges in the presence of DC ground on the positive terminal of the battery.

The duration of the discharge depends on the value of the distributed capacitance, the initial voltage of the distributed capacitance, and the input impedance of the contact input. If the duration is greater than the debounce time setting, then the contact input operates.

The application example that follows describes how to mitigate this problem by connecting a resistor across the contact input, as shown in the next figure, or by adjusting the debounce time setting to a value greater than the discharge time to prevent spurious operation of the contact input only if the voltage (with output open) across the contact input due to trickle current is less than the threshold voltage. This operation of contact inputs also can be prevented by using the Auto-Burnish contact inputs or contact inputs with active impedance.

Figure 3-22: Contact input connected to a contact output with resistor (R2) across the input

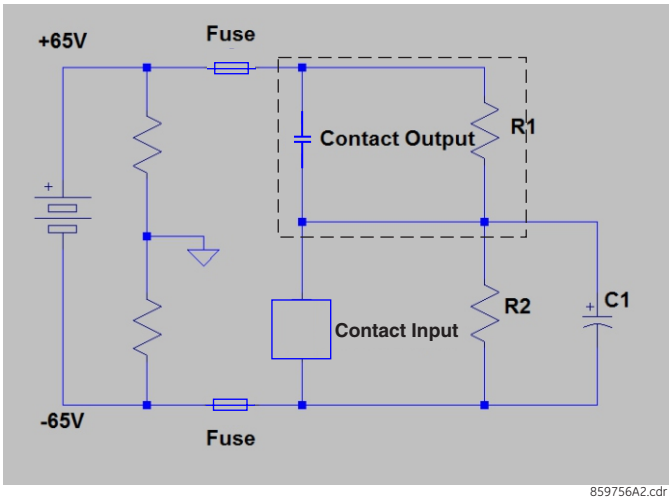

Application example

This example is for illustrative purposes only and the calculations present the worst-case scenario. In practice, the value of debounce time can be lower.

Contact input ON state impedance used in the calculation of the discharge period is based on the following table.

Table 3-4: Discharge period

Battery voltage (V)	Input impedance (kΩ)
130	50
250	97

Debounce time setting = 2 ms

Assume a stray capacitance of 0.1 µF.

Assume an initial voltage across the stray capacitance "Vinitial" = 19 V (Vthreshold - 65 V), where Vthreshold = 84 V. The initial voltage Vinitial depends on values of impedance of R1 and contact inputs when the contact input is OFF (non-activated state).

Therefore, discharge time constant (τ) =50 kΩ *0.1 µF = 5 ms.

Discharge period t is calculated from the following equation:

$$Vthreshold = (Vbatt - VInitial) *e^{(-t/\tau)}$$

$$84 = -149 *e^{(t/0.005)} \quad \textbf{Eq. 3-1}$$

$$T = -0.005 * \ln(84/149) = 0.0029 \text{ s}$$

Therefore, in this example the contact inputs operate.

To prevent this operation, the debounce time must be increased to 4 ms (set debounce time as per the following table) or insert a resistor less than or equal to "R" as calculated later.

Table 3-5: Typical debounce time setting

Stray capacitance (µF)	Battery voltage (V)	Debounce time (ms)
0.05	130	2
0.1	130	4
0.2	130	6
0.05	250	3
0.1	250	6
0.2	250	11

The value of this resistor "R" is calculated as follows:

1. Determine the minimum voltage (V threshold) required to turn on the input. This is determined by direct measurement or referenced in the input specifications.
2. Calculate the resistance necessary to limit the voltage to 1/3 V threshold (when the contact is OFF, the non-activated state) as follows:

   $$R = (Vthreshold / 3) / (2 \text{ mA}) \quad \textbf{Eq. 3-2}$$

   The 2 mA current is used in case the contact input is connected across the GE Form A contact output with voltage monitoring. Otherwise use the amperage of the active circuit connected to the contact input when its contact output is open and the voltage across the contact input is third trigger threshold to calculate the resistor value.
3. When the contact is ON (operate state), the battery voltage appears across the resistor. The wattage rating of the resistor is then:

   $$PR = 1.3 * (Vbatt)^2 / R \text{ Watts} \quad \textbf{Eq. 3-3}$$
4. Applying the following equation to our example:

   $$R = 84 \text{ V} / 3*(1 / 2 \text{ mA}) = 14 \text{ k}\Omega$$

   $$PR = 1.57 \text{ Watts} \quad \textbf{Eq. 3-4}$$
5. Calculating the voltage across the contact input with the Burden Resistor, Voltage across the contact Input:

   $$Vresistor = 2 \text{ mA} * 14 \text{ Kohm} = 28 \text{ V}$$

   $$Vresistor < \text{contact input threshold (84 V)} \quad \textbf{Eq. 3-5}$$

In conclusion, in this example, the contact input does NOT operate falsely with the Burden Resistor across its input AND when a battery ground is present.

3.3.6.3 Use of contact inputs with auto-burnishing

The contact inputs sense a change of the state of the external device contact based on the measured current. When external devices are located in a harsh industrial environment (either outdoor or indoor), their contacts can be exposed to various types of contamination. Normally, there is a thin film of insulating sulfidation, oxidation, or contaminates on the surface of the contacts, sometimes making it difficult or impossible to detect a change of the state. This film must be removed to establish circuit continuity — an impulse of higher than normal current can accomplish this.

The contact inputs with auto-burnish create a high current impulse when the threshold is reached to burn off this oxidation layer as a maintenance to the contacts. Afterwards the contact input current is reduced to a steady-state current. The impulse has a five-second delay after a contact input changes state.

Figure 3-23: Current through contact inputs with auto-burnishing

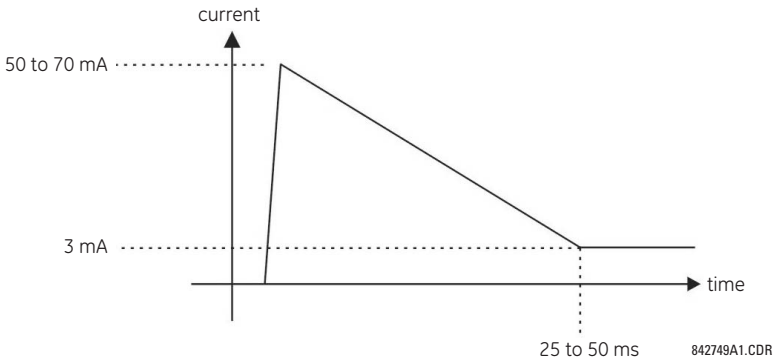

Regular contact inputs limit current to less than 3 mA to reduce station battery burden. In contrast, contact inputs with auto-burnishing allow currents up to 50 to 70 mA at the first instance when the change of state was sensed. Then, within 25 to 50 ms, this current is slowly reduced to 3 mA as indicated. The 50 to 70 mA peak current burns any film on the contacts, allowing for proper sensing of state changes. If the external device contact is bouncing, the auto-burnishing starts when external device contact bouncing is over.

Another important difference between the auto-burnishing input module and the regular input modules is that only two contact inputs have common ground, as opposed to four contact inputs sharing one common ground (see the Contact Input and Output Module Wiring diagrams). This is beneficial when connecting contact inputs to separate voltage sources. Consequently, the threshold voltage setting is also defined per group of two contact inputs.

The auto-burnish feature can be disabled or enabled using the DIP switches found on each daughter card. There is a DIP switch for each contact, for a total of 16 inputs.

Figure 3-24: Auto-burnish DIP switches

842751A1.CDR

CONTACT INPUT 1 AUTO-BURNISH = OFF
CONTACT INPUT 2 AUTO-BURNISH = OFF

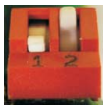

CONTACT INPUT 1 AUTO-BURNISH = ON
CONTACT INPUT 2 AUTO-BURNISH = OFF

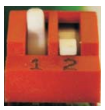

CONTACT INPUT 1 AUTO-BURNISH = OFF
CONTACT INPUT 2 AUTO-BURNISH = ON

CONTACT INPUT 1 AUTO-BURNISH = ON
CONTACT INPUT 2 AUTO-BURNISH = ON

The auto-burnish circuitry has an internal fuse for safety purposes. During regular maintenance, check the auto-burnish functionality using an oscilloscope.

3.3.6.4 Use of contact inputs with active impedance

Contact inputs susceptible to parasitic capacitance caused by long cable runs affected by switching surges from external circuits can result in inadvertent activation of contact inputs with the external contact open. In this case, GE recommends using the contact I/O module with active impedance circuit.

Active impedance contact input can tolerate external cable capacitance of up to 0.2 µF, without entering the ON state for more than 2 ms. The contact input debounce time can still be set above 2 ms for added security to prevent contact input activations cause by external transient ON states.

An active impedance contact input is normally in Low impedance mode during OFF contact state (non-activated condition). During Low impedance state contact input impedance is maintained at 10 K Ohms impedance to allow fast discharge of the stray capacitance of the long cables.

When the contact input voltage exceeds the set threshold, active impedance maintains 10 K Ohms impedance value. If voltage starts rapidly decreasing, this indicates that stray capacitance is being discharged through the contact input. If, however, voltage stabilizes above the set threshold, the input impedance is switched to High impedance mode of 100 K Ohms. This value reduces the input current to <3 mA, and contact input switched to the ON state (operated state).

The figure shows the active impedance contact input V-I characteristic. Different thresholds with their corresponding characteristics are shown by color. The contact input is in the ON (operated) state if the input voltage is to the right of the colored threshold band (+/-10% tolerance), and the contact input is in the OFF (non-activated) state when input voltage is to the left of the band. A contact input is in LOW state during non-operated system condition, and actively switches to HIGH state upon detection of input voltage above the settable threshold.

Figure 3-25: Active impedance contact input V-I characteristic

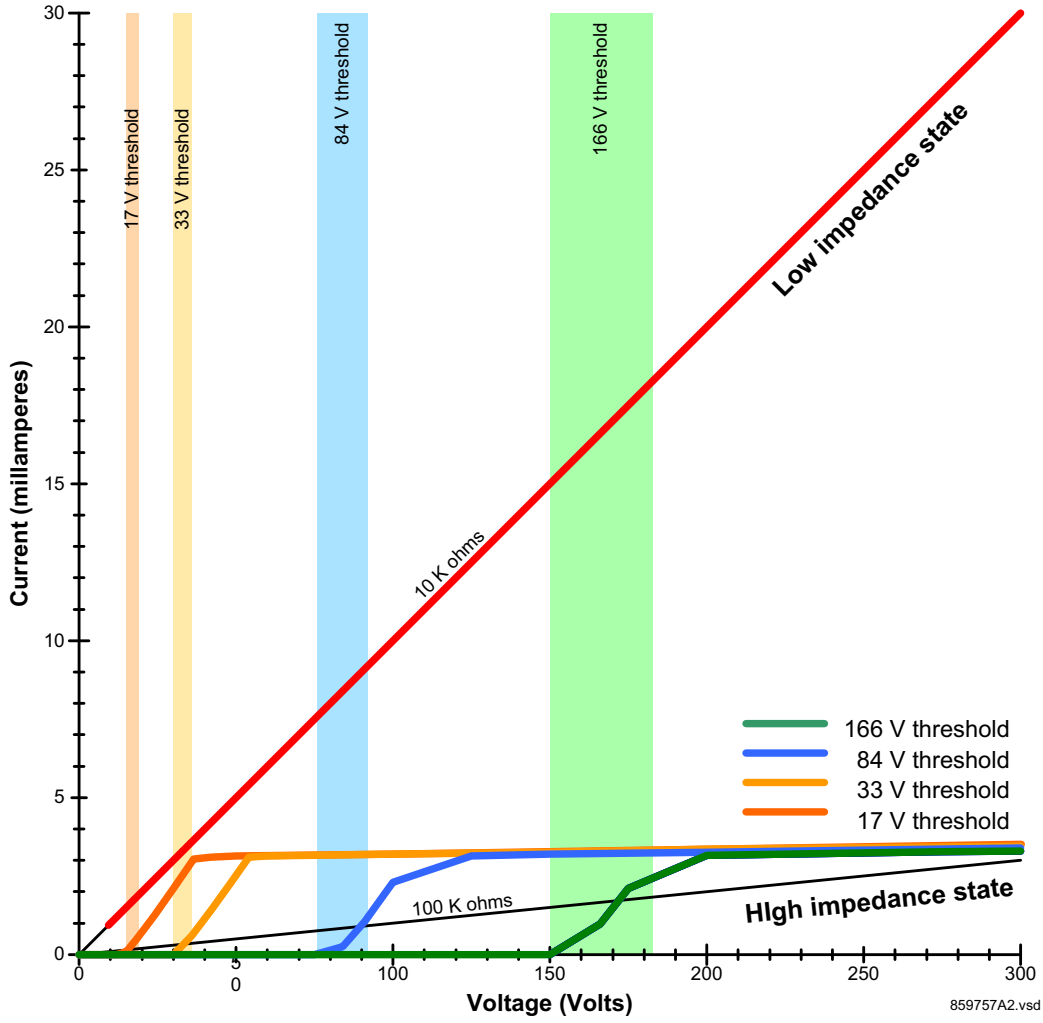

3.3.7 Transducer inputs and outputs

Transducer input modules can receive input signals from external DCmA output transducers (DCmA In) or resistance temperature detectors (RTDs). Hardware and software are provided to receive signals from these external transducers and convert these signals into a digital format for use as required.

Transducer output modules provide DC current outputs in several standard DCmA ranges. Software is provided to configure virtually any analog quantity used in the relay to drive the analog outputs.

Every transducer input/output module has a total of 24 terminal connections. These connections are arranged as three terminals per row with a total of eight rows. A given row can be used for either inputs or outputs, with terminals in column "a" having positive polarity and terminals in column "c" having negative polarity. Since an entire row is used for a single input/output channel, the name of the channel is assigned using the module slot position and row number.

Each module also requires that a connection from an external ground bus be made to terminal 8b. The current outputs require a twisted-pair shielded cable, where the shield is grounded at one end only. The following figure illustrates the transducer module types (5A, 5C, 5D, 5E, and 5F) and channel arrangements that can be ordered for the relay.

NOTE

Where a tilde "~" symbol appears, substitute the slot position of the module.

Figure 3-26: Transducer input/output module wiring

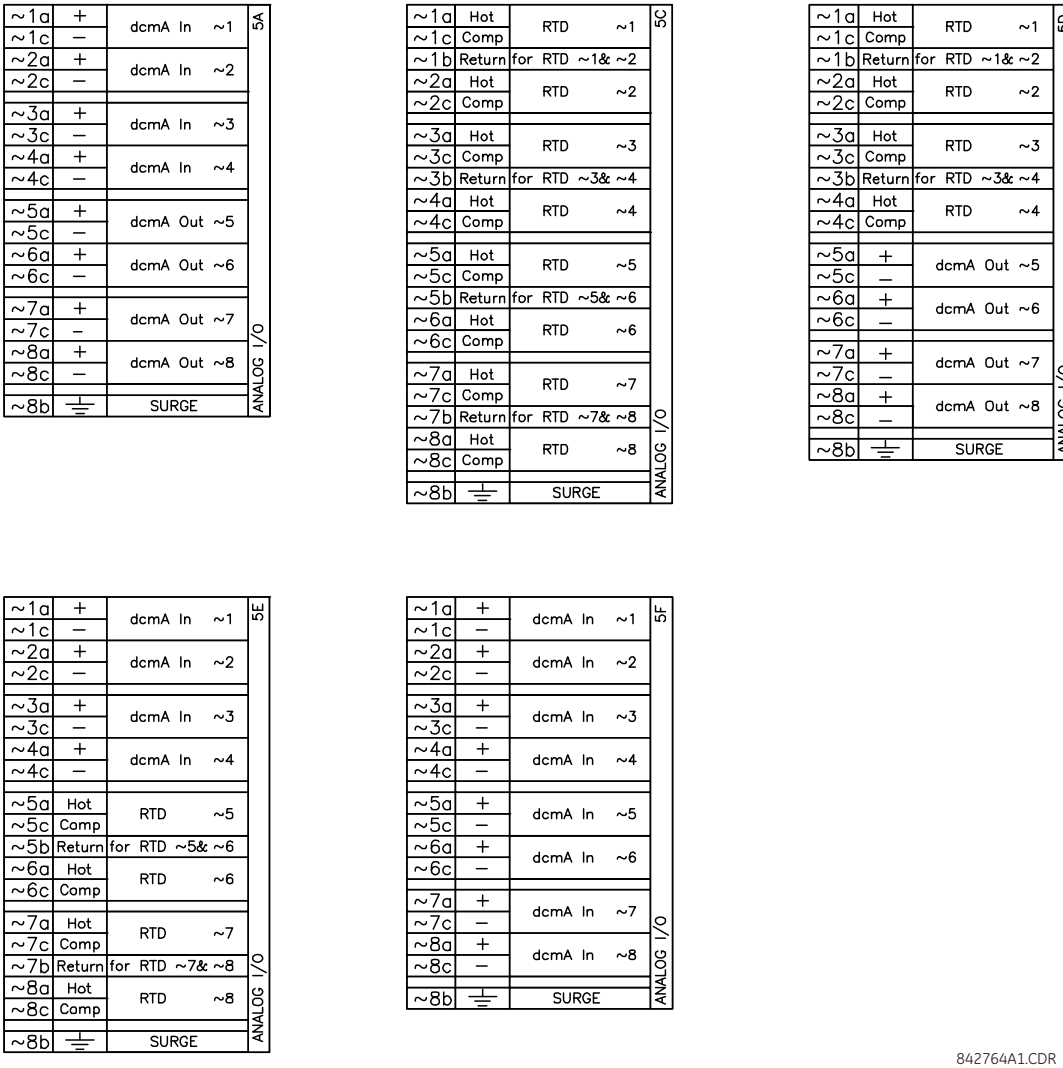

The following figure show how to connect RTDs.

Figure 3-27: RTD connections

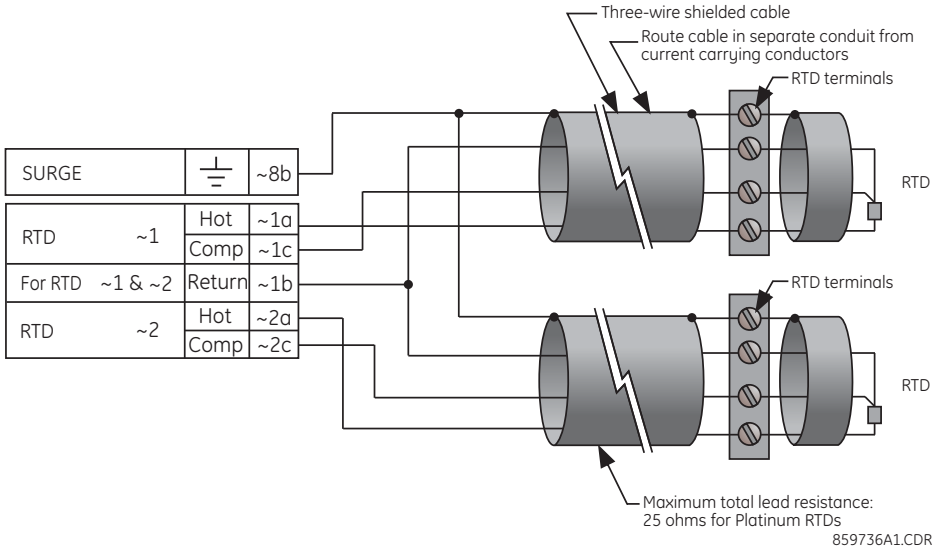

3.3.8 RS232 faceplate port

A nine-pin RS232C serial port is located on the faceplate for programming with a computer. All that is required to use this interface is a computer running the EnerVista UR Setup software provided with the relay. Cabling for the RS232 port is shown in the following figure for both 9-pin and 25-pin connectors.

The baud rate for this port can be set, with a default of 115200 bps.

Figure 3-28: RS232 faceplate port connection

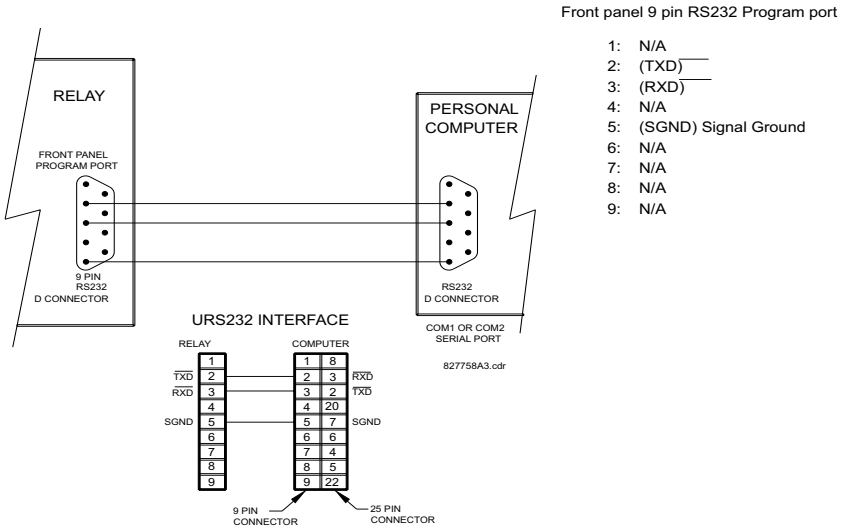

3.3.9 CPU communication ports

3.3.9.1 Overview

In addition to the faceplate RS232 port, there is a rear RS485 communication port.

The CPU modules do not require a surge ground connection.

3

Figure 3-29: CPU module communications wiring

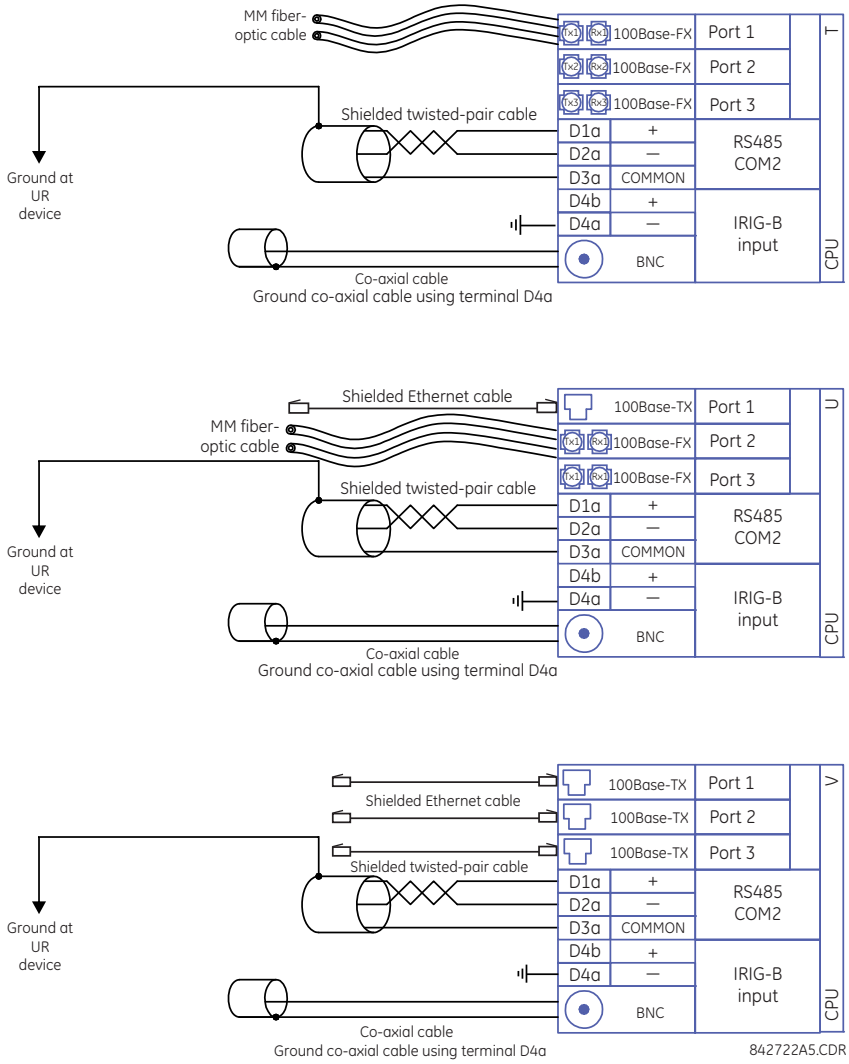

3.3.9.2 RS485 port

RS485 data transmission and reception are accomplished over a single twisted-pair wire with transmit and receive data alternating over the same two wires. Through the use of the port, continuous monitoring and control from a remote computer, SCADA system, or Power Line Carrier (PLC) is possible.

To minimize errors from noise, the use of shielded twisted-pair wire is recommended. Correct polarity must be observed. For instance, the relays must be connected with all RS485 "+" terminals connected together, and all RS485 "–" terminals connected together. Though data is transmitted over a two-wire twisted pair, all RS485 devices require a shared reference, or common voltage. This common voltage is implied to be a power supply common. Some systems allow the shield (drain wire) to be used as common wire and to connect directly to the F60 COM terminal (#3); others function correctly only if the common wire is connected to the F60 COM terminal, but insulated from the shield.

To avoid loop currents, ground the shield at only one point. If other system considerations require the shield to be grounded at more than one point, install resistors (typically 100 ohms) between the shield and ground at each grounding point. Each relay needs to be daisy-chained to the next one in the link. A maximum of 32 relays can be connected in this manner without exceeding driver capability. For larger systems, additional serial channels must be added. It is also possible to use commercially available repeaters to have more than 32 relays on a single channel. Avoid star or stub connections entirely.

Lightning strikes and ground surge currents can cause large momentary voltage differences between remote ends of the communication link. For this reason, surge protection devices are provided internally at both communication ports. An isolated power supply with an optocoupled data interface also acts to reduce noise coupling. To ensure maximum reliability, ensure that all equipment has similar transient protection devices installed.

Terminate both ends of the RS485 circuit with an impedance as shown in the figure.

Figure 3-30: RS485 serial connection

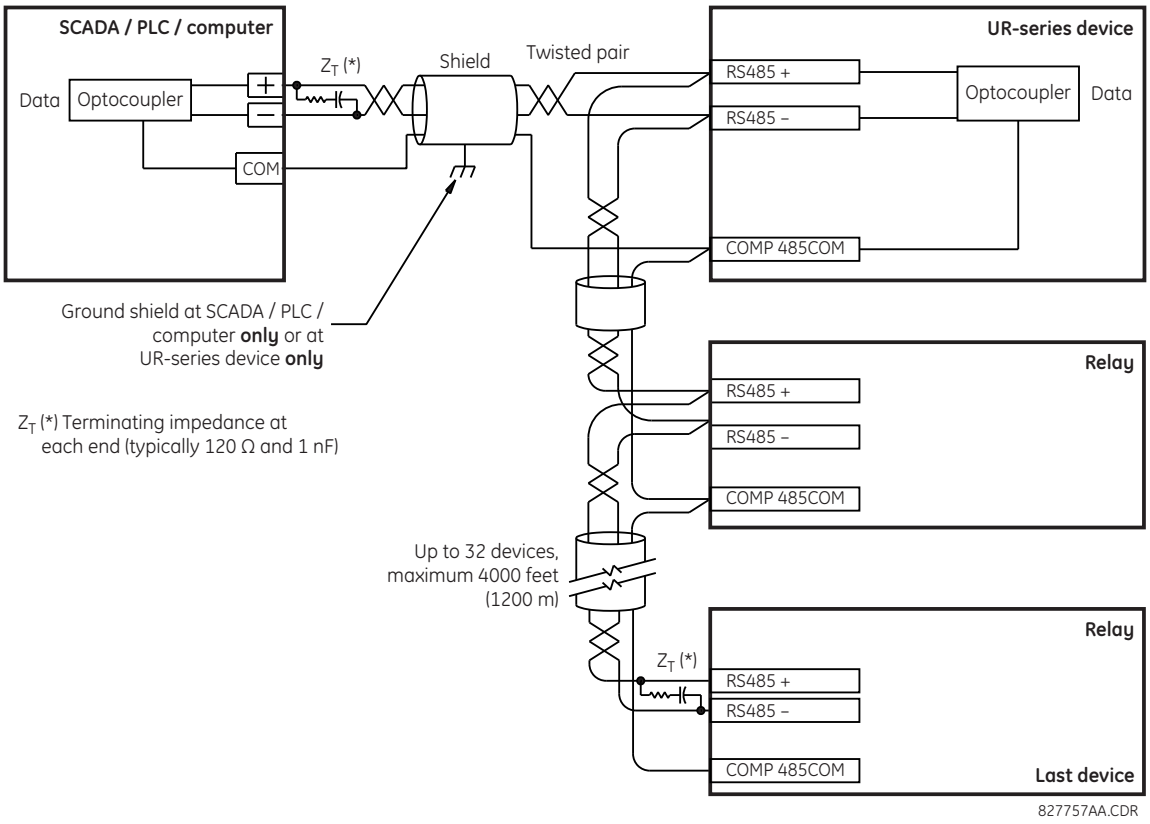

3.3.9.3 100Base-FX fiber optic ports

The fiber optic communication ports allow for fast and efficient communications between relays at 100 Mbps. Optical fiber can be connected to the relay supporting a wavelength of 1310 nm in multimode.

Ensure that the dust covers are installed when the fiber is not in use. Dirty or scratched connectors can lead to high losses on a fiber link.

3.3.10 IRIG-B

IRIG-B is a standard time code format that allows stamping of events to be synchronized among connected devices. The IRIG-B code allows time accuracies of up to 100 ns. Using the IRIG-B input, the F60 operates an internal oscillator with 1 µs resolution and accuracy. The IRIG time code formats are serial, pulse width-modulated codes that can be either DC level shifted or amplitude modulated (AM). The GE MultiSync 100 1588 GPS Clock as well as third-party equipment are available for generating the IRIG-B signal; this equipment can use a global positioning system (GPS) satellite system to obtain the time reference so that devices at different geographic locations can be synchronized.

3

Figure 3-31: Options for the IRIG-B connection

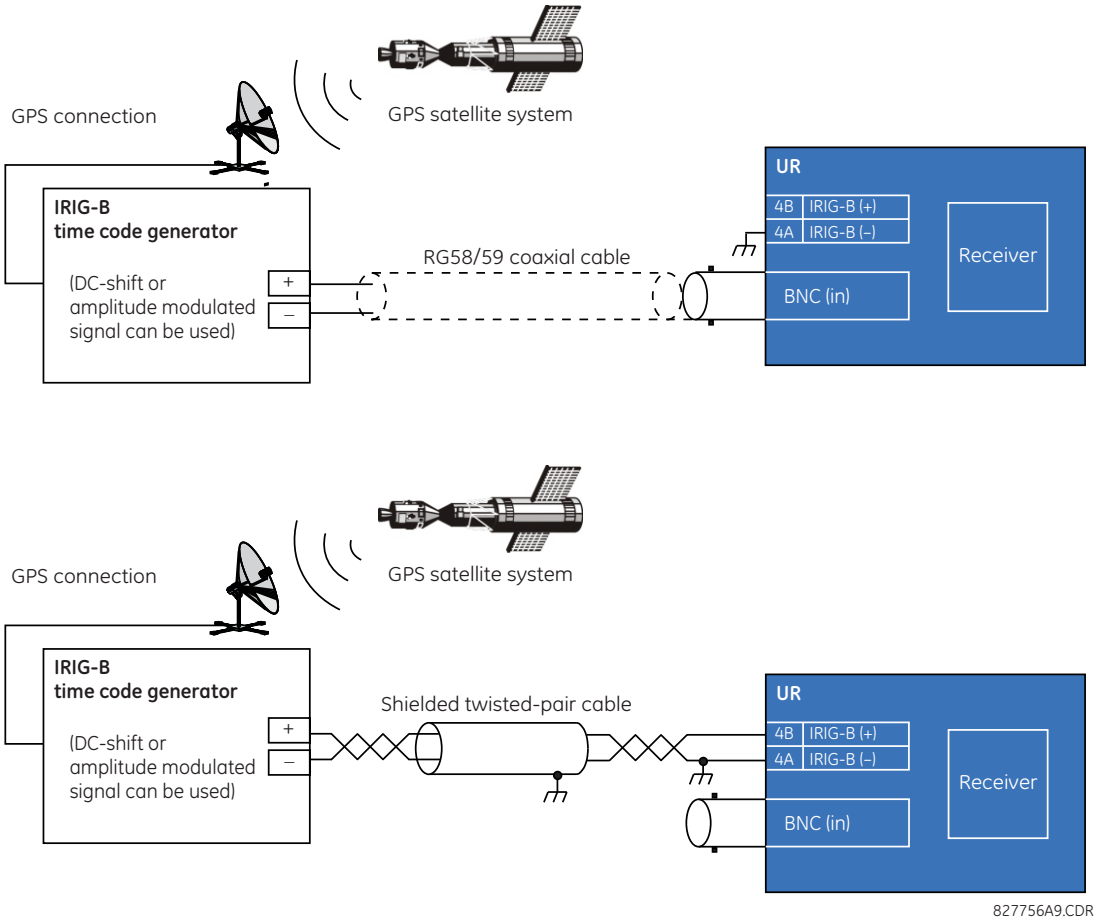

NOTE

Using an amplitude-modulated receiver causes errors up to 1 ms in event time-stamping.

The F60 is intended for use with external clocks that set the IRIG-B control bits according to IEEE Std C37.118.1-2011. When used with a source that sets the IRIG-B control bits according to IEEE Std 1344-1995, the source must have the sign of its local time offset setting reversed, and if daylight savings time (DST) is used, the source's DST start and DST stop date settings must be interchanged.

3.4 Direct input and output communications

3.4.1 Description

The direct inputs and outputs feature makes use of the type 7 series of communications modules and allows direct messaging between UR devices. The communications modules are outlined in the table later in this section.

The communications channels are normally connected in a ring configuration, as shown in the following figure. The transmitter of one module is connected to the receiver of the next module. The transmitter of this second module is then connected to the receiver of the next module in the ring. This is continued to form a communications ring. The figure illustrates a ring of four UR-series relays with the following connections: UR1-Tx to UR2-Rx, UR2-Tx to UR3-Rx, UR3-Tx to UR4-Rx, and UR4-Tx to UR1-Rx. A maximum of 16 URs can be connected in a single ring.

Figure 3-32: Direct input and output single-channel connection

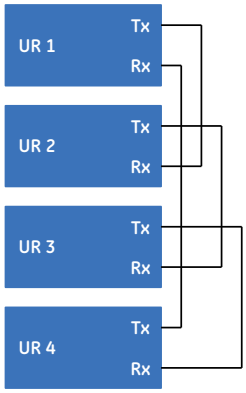

IRC modules with protocol C37.94 and G.703 are designed for back-to-back communication connections, so the ring configuration shown in the previous figure does not apply. To establish inter-relay communication in more than two URs, you need to have two channel IRC module and enable DIRECT I/O CHANNEL CROSSOVER function in all relays, as shown in the next figure. This configuration can be expanded to 16 URs, and this configuration does not provide redundancy ring since both channels are made into single ring by the channel crossover function. As per the figure Typical Pin Interconnection between Two G.703 Interfaces later in this chapter, the clock is supplied typically by multiplexer (MUX) and all URs are in Loop Timing Mode. If there is no MUX, then UR1 and UR3 can be in Internal Timing Mode and UR2 and UR4 can be in Loop Timing Mode. That is, connected channels must have opposite timing modes.

Figure 3-33: Ring configuration for C37.94 module (concept also applies to G.703)

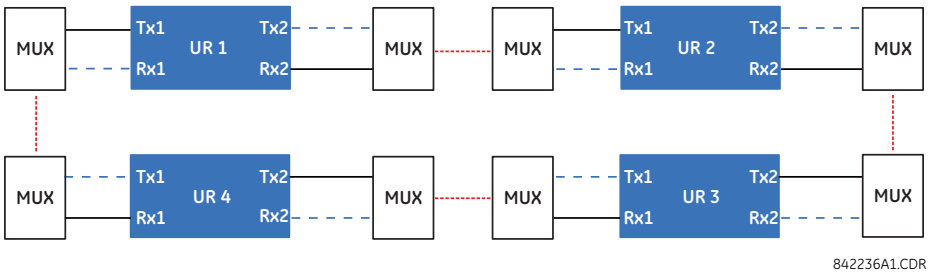

The interconnection for dual-channel type 7 communications modules is shown as follows. Two-channel modules allow for a redundant ring configuration. That is, two rings can be created to provide an additional independent data path. The required connections are: UR1-Tx1 to UR2-Rx1, UR2-Tx1 to UR3-Rx1, UR3-Tx1 to UR4-Rx1, and UR4-Tx1 to UR1-Rx1 for the first ring; and UR1-Tx2 to UR4-Rx2, UR4-Tx2 to UR3-Rx2, UR3-Tx2 to UR2-Rx2, and UR2-Tx2 to UR1-Rx2 for the second ring.

Figure 3-34: Direct input and output dual-channel connection

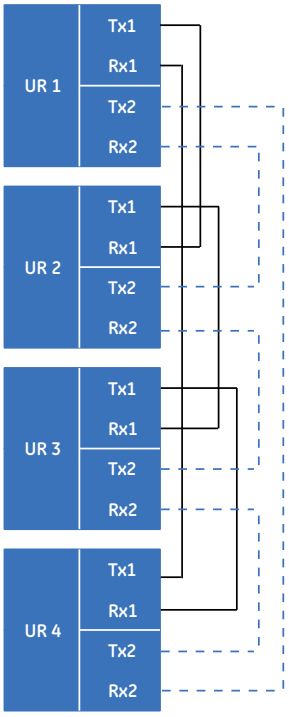

The following diagram shows the connection for three UR-series relays using two independent communication channels. UR1 and UR3 have single type 7 communication modules; UR2 has a dual-channel module. The two communication channels can be of different types, depending on the type 7 modules used. To allow the direct input and output data to cross-over from channel 1 to channel 2 on UR2, set the **DIRECT I/O CHANNEL CROSSOVER** setting to "Enabled" on UR2. This forces UR2 to forward messages received on Rx1 out Tx2, and messages received on Rx2 out Tx1.

Figure 3-35: Direct input and output single/dual channel combination connection

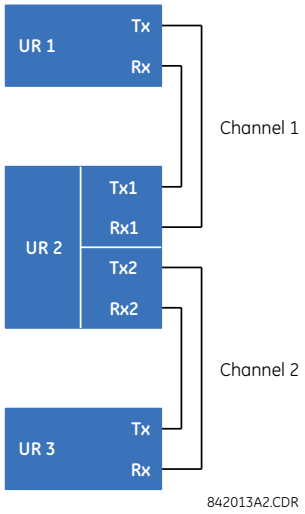

The inter-relay communications modules are available with several interfaces and some are outlined here in more detail. Those that apply depend on options purchased. The options are outlined in the Inter-Relay Communications section of the Order Code tables in Chapter 2. All of the fiber modules use ST type connectors.

3.4.2 Fiber: LED and ELED transmitters

The following figure shows the configuration for the 7A, 7B, 7C, 7H, 7I, and 7J fiber-only modules.

Figure 3-36: LED and ELED fiber modules

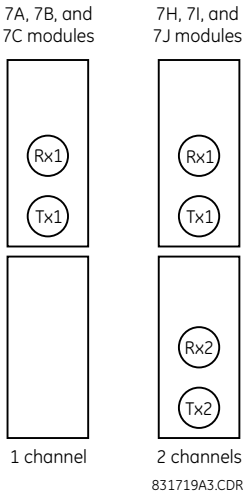

3.4.3 Fiber laser transmitters

The following figure shows the configuration for the 72, 73, 7D, and 7K fiber-laser modules.

Figure 3-37: 7x Laser fiber modules

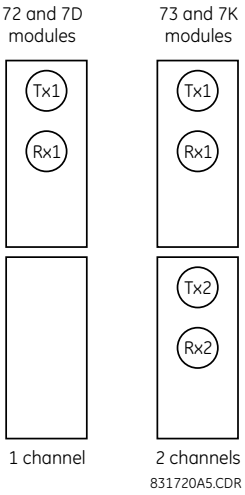

The following figure shows configuration for the 2I and 2J fiber-laser modules.

Figure 3-38: 2I and 2J laser fiber modules

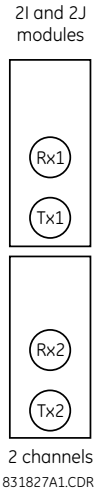

⚠CAUTION **Observing any fiber transmitter output can injure the eye.**

NOTICE When using a laser Interface, attenuators can be necessary to ensure that you do not exceed the maximum optical input power to the receiver.

3.4.4 G.703 interface

3.4.4.1 Description

The following figure shows the 64K ITU G.703 co-directional interface configuration.

The G.703 module is fixed at 64 kbps. The **SETTINGS ⇨ PRODUCT SETUP ⇨⇩ DIRECT I/O ⇨ DIRECT I/O DATA RATE** setting is not applicable to this module.

AWG 24 twisted shielded pair is recommended for external connections, with the shield grounded only at one end. Connecting the shield to pin X1a or X6a grounds the shield since these pins are connected internally to ground. Thus, if pin X1a or X6a is used to ground the shield at one end, do not ground the shield at the other end. This interface module is protected by surge suppression devices.

Figure 3-39: G.703 interface configuration

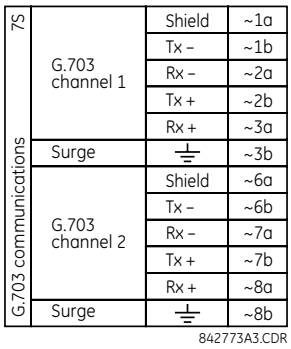

The following figure shows the typical pin interconnection between two G.703 interfaces. For the actual physical arrangement of these pins, see the Rear Terminal Layout section earlier in this chapter. All pin interconnections are to be maintained for a connection to a multiplexer.

Figure 3-40: Typical pin interconnection between two G.703 interfaces

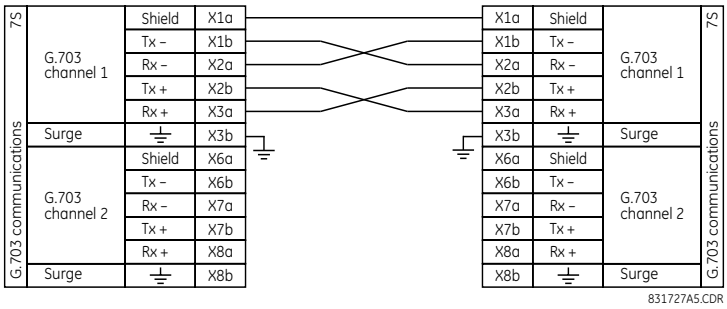

NOTE

Pin nomenclature differs from one manufacturer to another. It is not uncommon to see pinouts numbered TxA, TxB, RxA, and RxB. In such cases, assume that "A" is equivalent to "+" and "B" is equivalent to "–."

3.4.4.2 G.703 selection switch procedures

1. With the power to the relay off, remove the G.703 module (7R or 7S) as follows. Record the original location of the module to help ensure that the same or replacement module is inserted into the correct slot.
2. Simultaneously pull the ejector/inserter clips located at the top and at the bottom of each module in order to release the module for removal. (For more information on accessing modules, see the Maintenance chapter.)
3. Remove the module cover screw.
4. Remove the top cover by sliding it towards the rear and then lift it upwards.
5. Set the timing selection switches (channels 1 and 2) to the required timing modes.
6. Replace the top cover and the cover screw.
7. Re-insert the G.703 module. Take care to ensure that the correct module type is inserted into the correct slot position. The ejector/inserter clips located at the top and bottom of each module must be in the disengaged position as the module is inserted smoothly into the slot. Once the clips have cleared the raised edge of the chassis, engage the clips simultaneously. When the clips have locked into position, the module is inserted fully.

Figure 3-41: G.703 timing selection switch setting

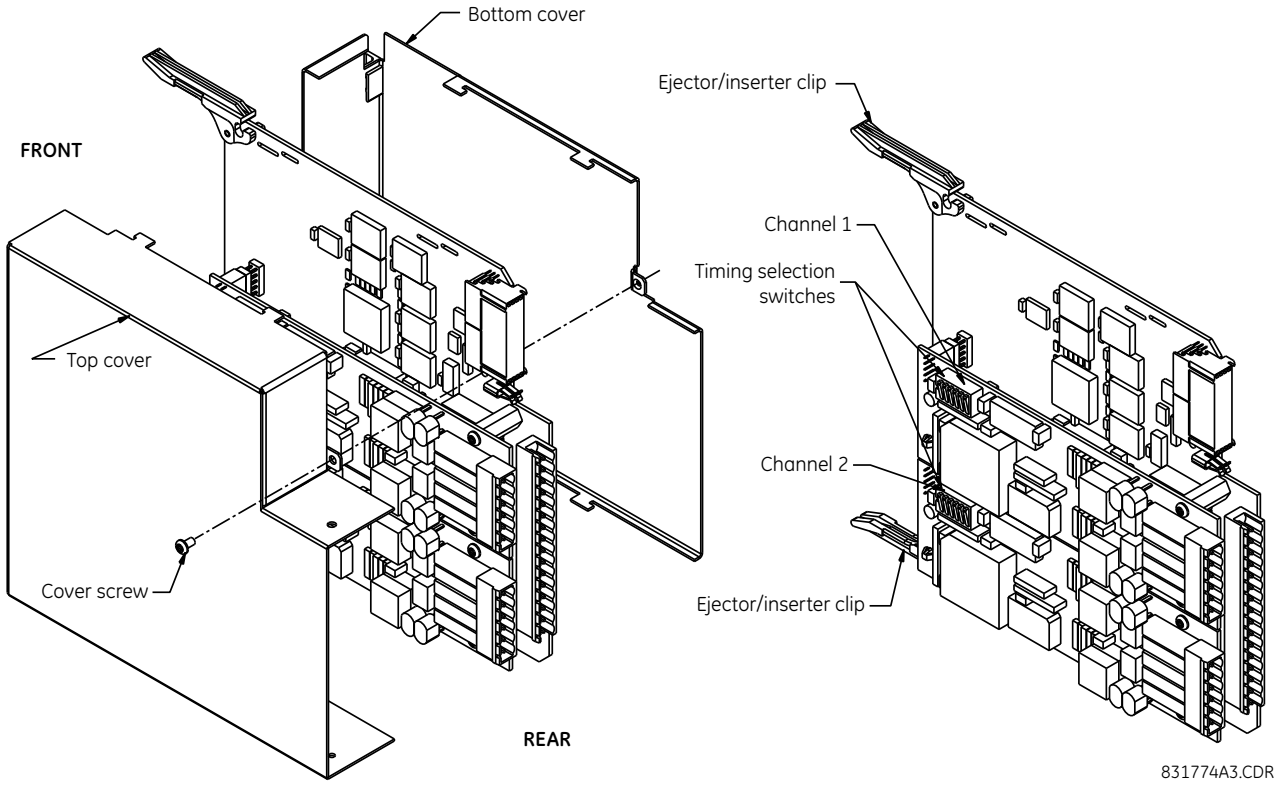

Table 3-6: G.703 timing selections

Switches	Function
S1	OFF → octet timing disabled ON → octet timing 8 kHz
S5 and S6	S5 = OFF and S6 = OFF → loop timing mode S5 = ON and S6 = OFF → internal timing mode S5 = OFF and S6 = ON → minimum remote loopback mode S5 = ON and S6 = ON → dual loopback mode

3.4.4.3 G.703 octet timing

If octet timing is enabled (ON), this 8 kHz signal is asserted during the violation of bit 8 (LSB) necessary for connecting to higher order systems. When F60s are connected back-to-back, octet timing is disabled (OFF).

3.4.4.4 G.703 timing modes

There are two timing modes for the G.703 module: internal timing mode and loop timing mode (default).

- **Internal Timing Mode** — The system clock is generated internally. Therefore, set the G.703 timing selection to internal timing mode for back-to-back (UR-to-UR) connections. For back-to-back connections, set octet timing (S1 = OFF) and timing mode to internal timing (S5 = ON and S6 = OFF).
- **Loop Timing Mode** — The system clock is derived from the received line signal. Therefore, set the G.703 timing selection to loop timing mode for connections to higher order systems. For connection to a higher order system (UR-to-multiplexer, factory defaults), set to octet timing (S1 = ON) and set timing mode to loop timing (S5 = OFF and S6 = OFF).

The switch settings for the internal and loop timing modes are shown.

Figure 3-42: Switches

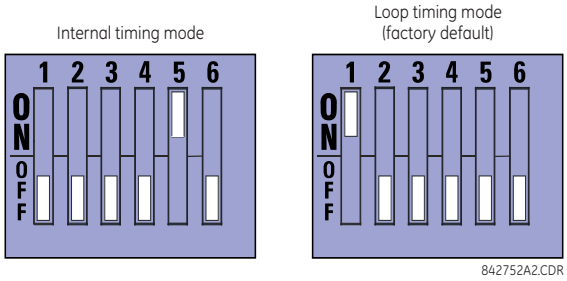

3.4.4.5 G.703 test modes

In *minimum remote loopback mode*, the multiplexer is enabled to return the data from the external interface without any processing to assist in diagnosing G.703 line-side problems irrespective of clock rate. Data enters from the G.703 inputs, passes through the data stabilization latch that also restores the proper signal polarity, passes through the multiplexer and then returns to the transmitter. The differential received data is processed and passed to the G.703 transmitter module after which point the data is discarded. The G.703 receiver module is fully functional and continues to process data and passes it to the differential Manchester transmitter module. Since timing is returned as it is received, the timing source is expected to be from the G.703 line side of the interface.

Figure 3-43: G.703 minimum remote loopback mode

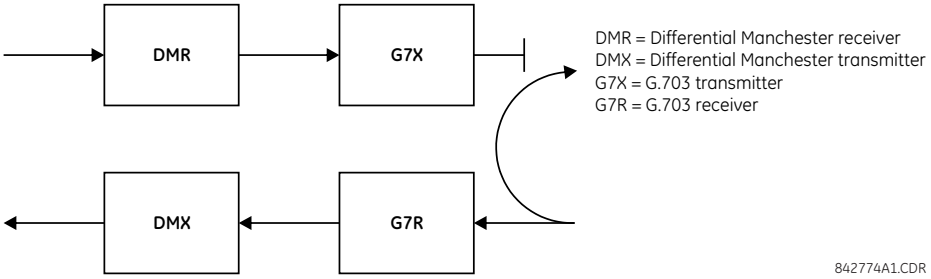

In *dual loopback mode*, the multiplexers are active and the functions of the circuit are divided into two with each receiver/transmitter pair linked together to deconstruct and then reconstruct their respective signals. Differential Manchester data enters the Differential Manchester receiver module and then is returned to the differential Manchester transmitter module. Likewise, G.703 data enters the G.703 receiver module and is passed through to the G.703 transmitter module to be returned as G.703 data. Because of the complete split in the communications path and because, in each case, the clocks are extracted and reconstructed with the outgoing data, in this mode there must be two independent sources of timing. One source lies on the G.703 line side of the interface while the other lies on the differential Manchester side of the interface.

Figure 3-44: G.703 dual loopback mode

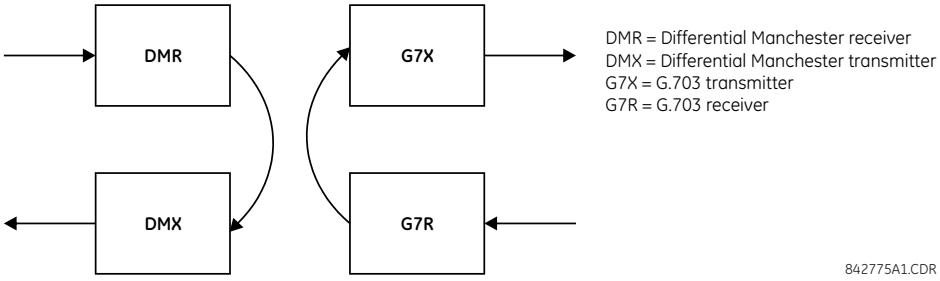

3.4.5 RS422 interface

3.4.5.1 Description

There are two RS422 inter-relay communications modules available: single-channel RS422 (module 7T) and dual-channel RS422 (module 7W). The modules can be configured to run at 64 kbps or 128 kbps. AWG 20-24 twisted shielded pair cable is recommended for external connections. These modules are protected by optically-isolated surge suppression devices.

The shield pins (6a and 7b) are connected internally to the ground pin (8a). Proper shield termination is as follows:

- Site 1 — Terminate shield to pins 6a or 7b or both
- Site 2 — Terminate shield to COM pin 2b

Match the clock terminating impedance with the impedance of the line.

Figure 3-45: RS422 interface connections

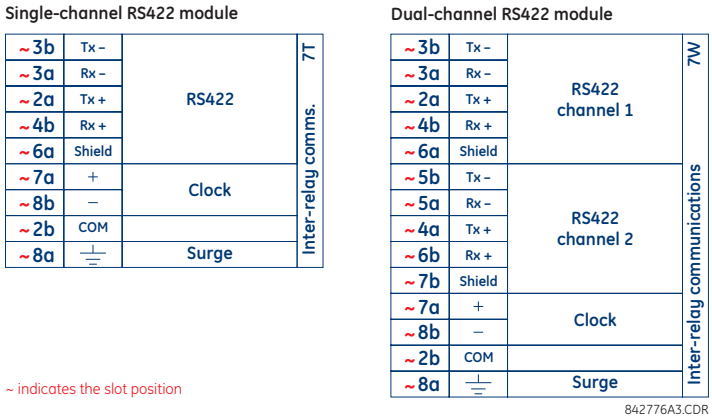

The following figure shows the typical pin interconnection between two single-channel RS422 interfaces installed in slot W. All pin interconnections are to be maintained for a connection to a multiplexer.

Figure 3-46: Typical pin interconnect between two RS422 interfaces

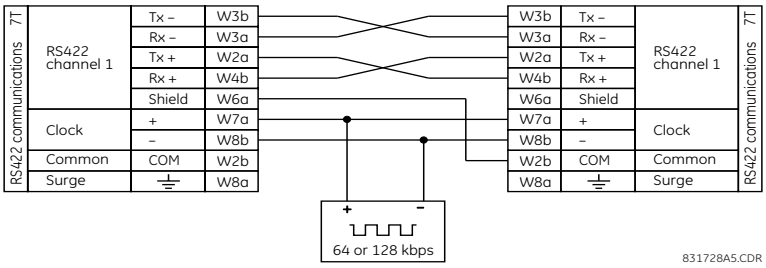

3.4.5.2 Two-channel application via multiplexers

The RS422 interface can be used for single-channel or two-channel applications over SONET/SDH or multiplexed systems. When used in single-channel applications, the RS422 interface links to higher-order systems in a typical way, observing transmit (Tx), receive (Rx), and send timing (ST) connections. However, when used in two-channel applications, certain criteria must be followed since there is one clock input for the two RS422 channels. The system functions correctly when the following connections are observed and your data module has a terminal timing feature. Terminal timing is a common feature to most synchronous data units that allows the module to accept timing from an external source. Using the terminal timing feature, two-channel applications can be achieved if these connections are followed: the send timing outputs from the multiplexer (data module 1) connects to the clock inputs of the UR RS422 interface in the usual way. In addition, the send timing outputs of data module 1 are also paralleled to the terminal timing inputs of data module 2. By using this configuration, the timing for both data modules and both UR RS422 channels are derived from a single clock

source. As a result, data sampling for both of the UR RS422 channels is synchronized via the send timing leads on data module 1, shown as follows. If the terminal timing feature is not available or this type of connection is not wanted, the G.703 interface is a viable option that does not impose timing restrictions.

Figure 3-47: Timing configuration for RS422 two-channel, three-terminal application

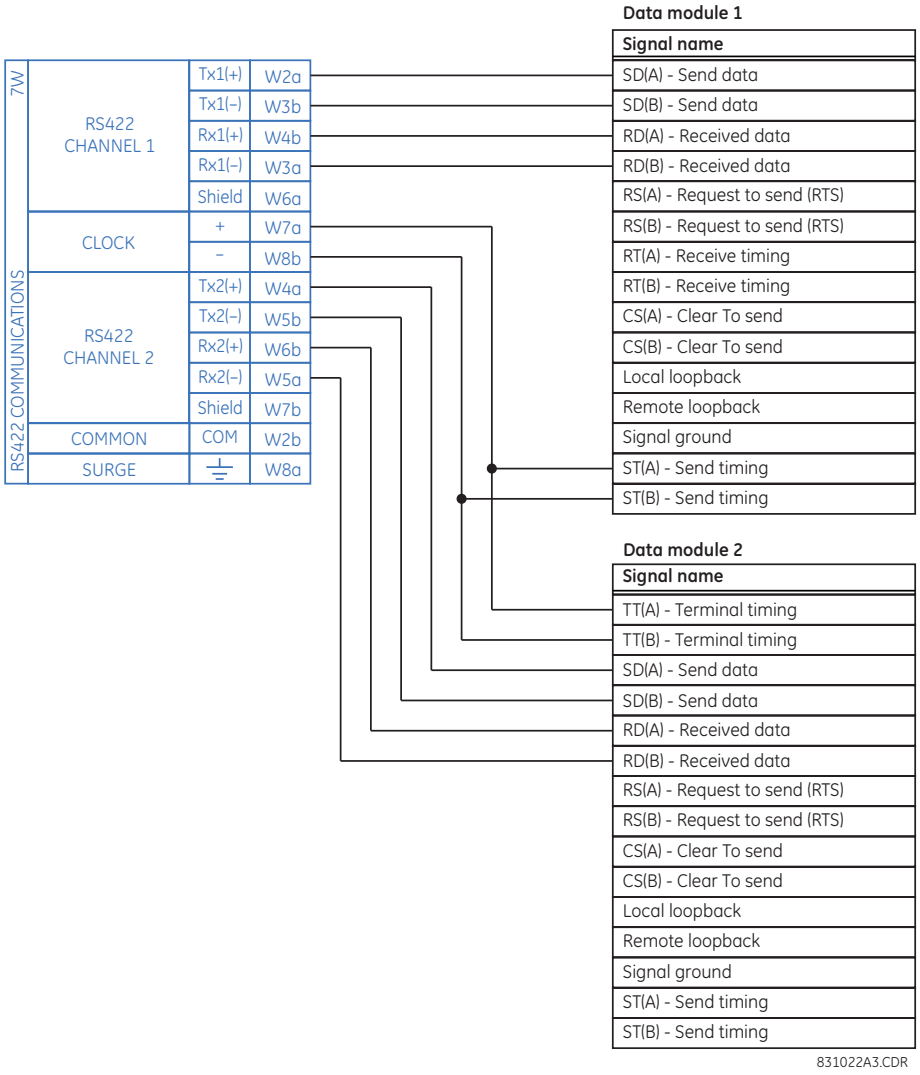

Data module 1 provides timing to the F60 RS422 interface via the ST(A) and ST(B) outputs. Data module 1 also provides timing to data module 2 TT(A) and TT(B) inputs via the ST(A) and AT(B) outputs. The data module pin numbers have been omitted in the figure because they vary by manufacturer.

3.4.5.3 Transmit timing

The RS422 interface accepts one clock input for transmit timing. It is important that the rising edge of the 64 kHz transmit timing clock of the multiplexer interface is sampling the data in the center of the transmit data window. Therefore, it is important to confirm clock and data transitions to ensure proper system operation. For example, the following figure shows the positive edge of the Tx clock in the center of the Tx data bit.

Figure 3-48: Clock and data transitions

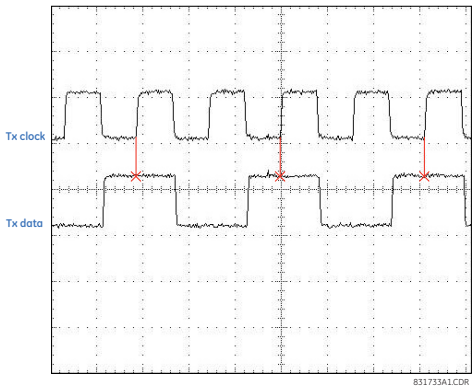

3.4.5.4 Receive timing

The RS422 interface utilizes NRZI-MARK modulation code and therefore does not rely on an Rx clock to recapture data. NRZI-MARK is an edge-type, invertible, self-clocking code.

To recover the Rx clock from the data-stream, an integrated digital phase lock loop (DPLL) circuit is utilized. The DPLL is driven by an internal clock, which is 16-times over-sampled, and uses this clock along with the data-stream to generate a data clock that can be used as the serial communication controller (SCC) receive clock.

3.4.6 RS422 and fiber interface

The following figure shows the combined RS422 plus fiberoptic interface configuration at 64 K baud. The 7L, 7M, 7N, 7P, and 74 modules are used in two-terminal with a redundant channel or three-terminal configurations where channel 1 is employed via the RS422 interface (possibly with a multiplexer) and channel 2 via direct fiber.

AWG 20-24 twisted shielded pair is recommended for external RS422 connections and ground the shield only at one end. For the direct fiber channel, address power budget issues properly.

NOTICE When using a laser interface, attenuators can be necessary to ensure that you do not exceed maximum optical input power to the receiver.

Figure 3-49: RS422 and fiber interface connection

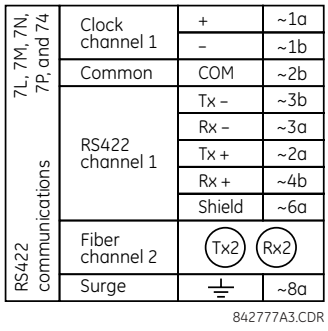

The connections shown in the figure are for multiplexers configured as data communications equipment (DCE) units.

3.4.7 G.703 and fiber interface

The following figure shows the combined G.703 plus fiberoptic interface configuration at 64 kbps. The 7E, 7F, 7G, 7Q, and 75 modules are used in configurations where channel 1 is employed via the G.703 interface (possibly with a multiplexer) and channel 2 via direct fiber. AWG 24 twisted shielded pair is recommended for external G.703 connections connecting the shield to pin 1a at one end only. For the direct fiber channel, address power budget issues properly. See previous sections for details on the G.703 and fiber interfaces.

NOTICE When using a laser interface, attenuators can be necessary to ensure that you do not exceed the maximum optical input power to the receiver.

Figure 3-50: G.703 and fiber interface connection

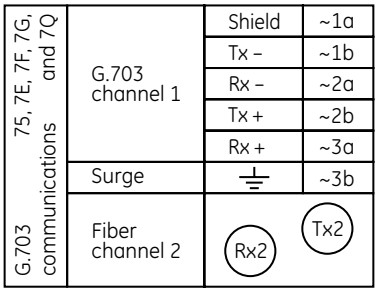

3.4.8 IEEE C37.94 interface

The UR-series IEEE C37.94 communication modules (module types 2G, 2H, 2I, 2J, 76, and 77) are designed to interface with IEEE C37.94 compliant digital multiplexers or an IEEE C37.94 compliant interface converter for use with direct input and output applications. The IEEE C37.94 standard defines a point-to-point optical link for synchronous data between a multiplexer and a teleprotection device. This data is typically 64 kbps, but the standard provides for speeds up to 64*n* kbps, where n = 1, 2,..., 12. The UR-series C37.94 communication modules are either 64 kbps (with n fixed at 1) or 128 kbps (with n fixed at 2). The frame is a valid International Telecommunications Union (ITU-T) recommended G.704 pattern from the standpoint of framing and data rate. The frame is 256 bits and is repeated at a frame rate of 8000 Hz, with a resultant bit rate of 2048 kbps.

The specifications for the module are as follows:

- IEEE standard — C37.94 for 1 × 128 kbps optical fiber interface (for 2G and 2H modules) or C37.94 for 2 × 64 kbps optical fiber interface (for 76 and 77 modules)
- Fiber optic cable type — 50 nm or 62.5 µm core diameter optical fiber
- Fiber optic mode — multimode
- Fiber optic cable length — up to 2 km
- Fiber optic connector — type ST
- Wavelength — 820 ±40 nm
- Connection — as per all fiber optic connections, a Tx-to-Rx connection is required

The UR-series C37.94 communication module can be connected directly to any compliant digital multiplexer that supports the IEEE C37.94 standard. The figure shows the concept.

Figure 3-51: IEEE C37.94 connection to compliant digital multiplexer

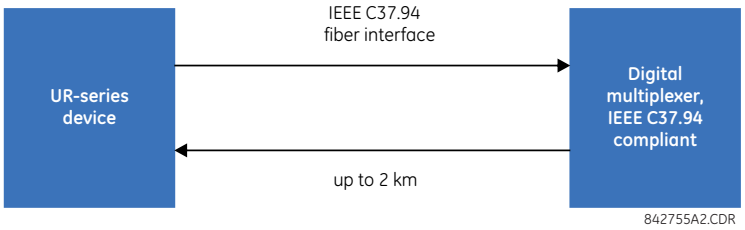

The UR-series C37.94 communication module can be connected to the electrical interface (G.703, RS422, or X.21) of a non-compliant digital multiplexer via an optical-to-electrical interface converter that supports the IEEE C37.94 standard. The following figure shows the concept.

Figure 3-52: IEEE C37.94 connection to non-compliant digital multiplexer

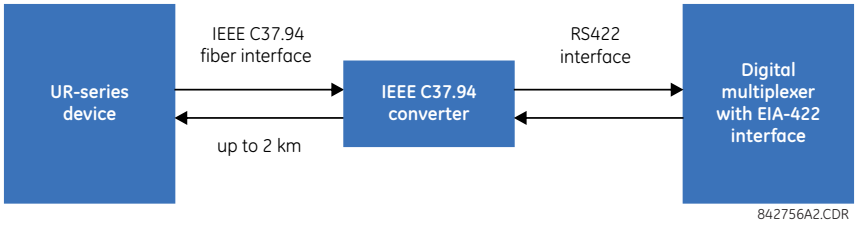

In 2008, GE Grid Solutions released revised modules 76 and 77 for C37.94 communication to enable multi-ended fault location functionality with firmware 5.60 release and higher. All modules 76 and 77 shipped since the change support this feature and are fully backward compatible with firmware releases below 5.60. For customers using firmware release 5.60 and higher, the module can be identified with "Rev D" printed on the module and is to be used on all ends of F60 communication for two and three terminal applications. Failure to use it at all ends results in intermittent communication alarms. For customers using firmware revisions below 5.60, it is not required to match the revision of the modules installed.

The UR-series C37.94 communication module has six switches to set the clock configuration. The following figure shows the functions of these control switches.

Figure 3-53: Switches

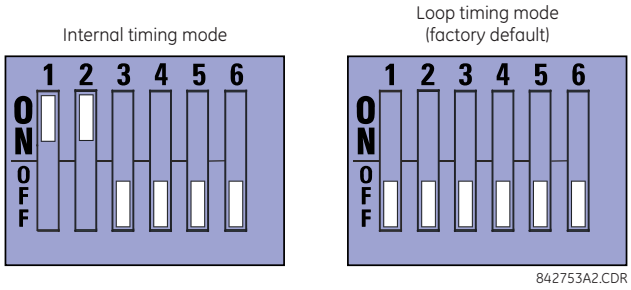

For the internal timing mode, the system clock is generated internally. Therefore, set the timing switch selection to internal timing for relay 1 and loop timed for relay 2. There must be only one timing source configured.

For the looped timing mode, the system clock is derived from the received line signal. Therefore, set the timing selection to loop timing mode for connections to higher order systems.

The IEEE C37.94 communications module cover removal procedure is as follows:

1. With power to the relay off, remove the IEEE C37.94 module (type 2G, 2H, 2I, 2J, 76, or 77 module) as follows. Record the original location of the module to help ensure that the same or replacement module is inserted into the correct slot.
2. Simultaneously pull the ejector/inserter clips located at the top and bottom of each module in order to release the module for removal.

3. Remove the module cover screw.
4. Remove the top cover by sliding it towards the rear and then lift it upwards.
5. Set the timing selection switches (channels 1 and 2) to the required timing modes (see description earlier).
6. Replace the top cover and the cover screw.
7. Re-insert the IEEE C37.94 module. Take care to ensure that the **correct** module type is inserted into the **correct** slot position. The ejector/inserter clips located at the top and at the bottom of each module must be in the disengaged position as the module is inserted smoothly into the slot. Once the clips have cleared the raised edge of the chassis, engage the clips simultaneously. When the clips have locked into position, the module is inserted fully.

Figure 3-54: IEEE C37.94 timing selection switch setting

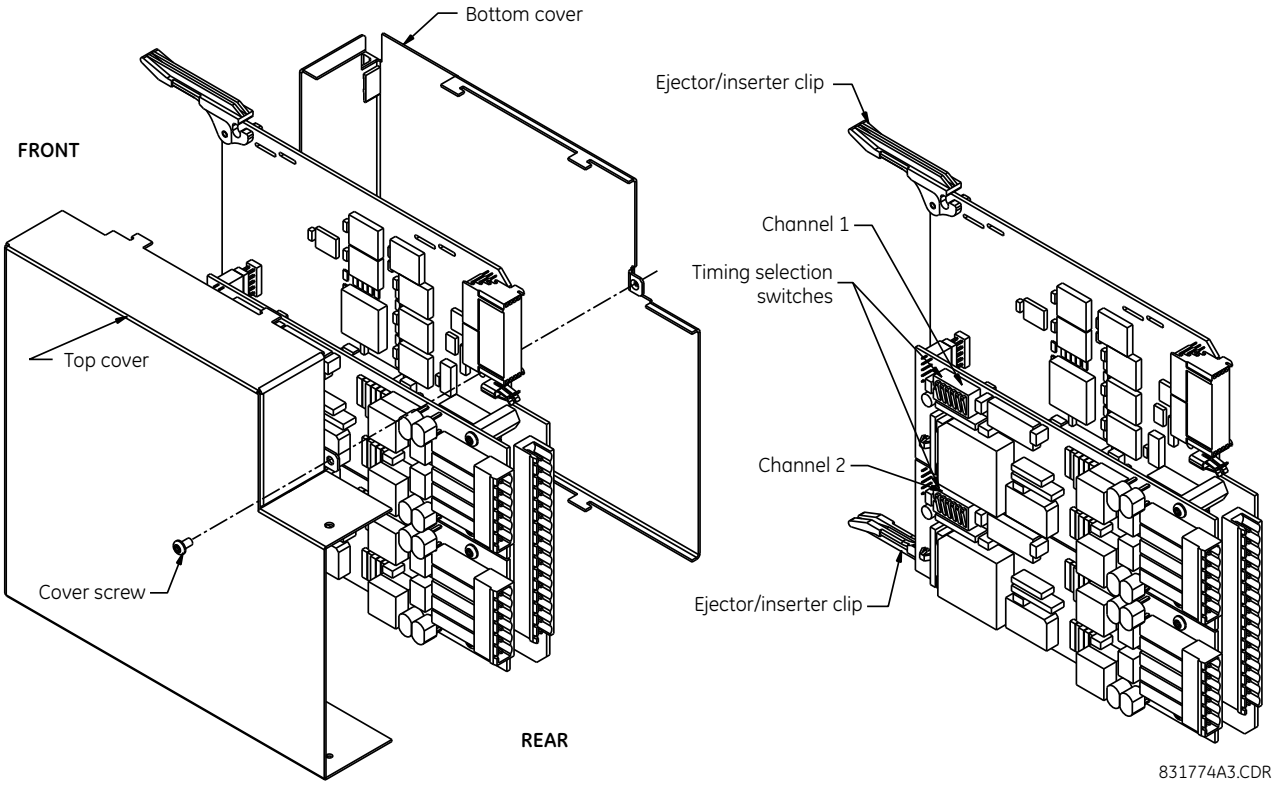

Modules shipped since January 2012 have status LEDs that indicate the status of the DIP switches, as shown in the following figure.

Figure 3-55: Status LEDs

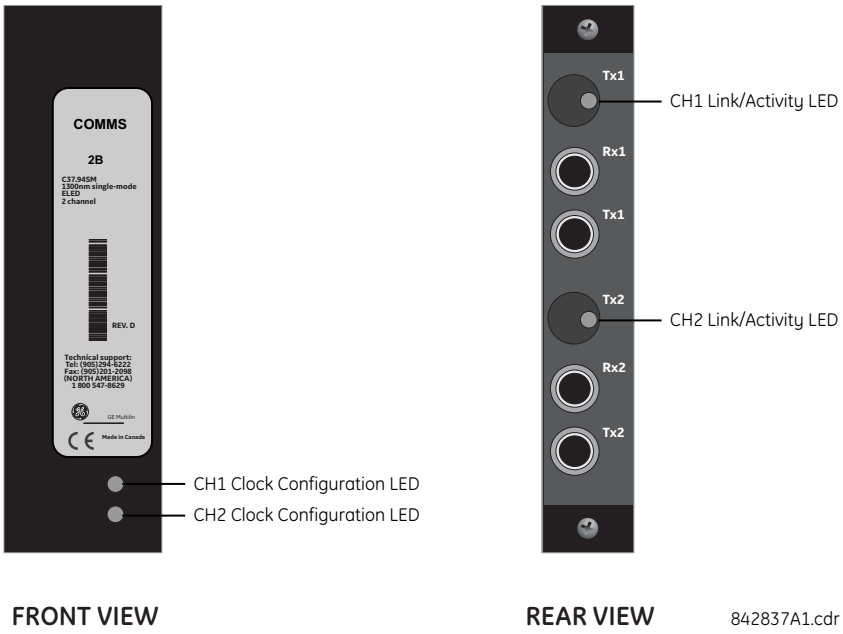

The clock configuration LED status is as follows:

- Flashing green — loop timing mode while receiving a valid data packet
- Flashing yellow — internal mode while receiving a valid data packet
- Solid red — (switch to) internal timing mode while not receiving a valid data packet

The link/activity LED status is as follows:

- Flashing green — FPGA is receiving a valid data packet
- Solid yellow — FPGA is receiving a "yellow bit" and remains yellow for each "yellow bit"
- Solid red — FPGA is not receiving a valid packet or the packet received is invalid

3.4.9 C37.94SM interface

The UR-series C37.94SM communication modules (2A and 2B) are designed to interface with modified IEEE C37.94 compliant digital multiplexers or IEEE C37.94 compliant interface converters that have been converted from 820 nm multi-mode fiber optics to 1300 nm ELED single-mode fiber optics. The IEEE C37.94 standard defines a point-to-point optical link for synchronous data between a multiplexer and a teleprotection device. This data is typically 64 kbps, but the standard provides for speeds up to 64*n* kbps, where *n* = 1, 2,..., 12. The UR-series C37.94SM communication module is 64 kbps only with *n* fixed at 1. The frame is a valid International Telecommunications Union (ITU-T) recommended G.704 pattern from the standpoint of framing and data rate. The frame is 256 bits and is repeated at a frame rate of 8000 Hz, with a resultant bit rate of 2048 kbps.

The specifications for the module are as follows:

- Emulated IEEE standard — Emulates C37.94 for 1 × 64 kbps optical fiber interface (modules set to *n* = 1 or 64 kbps)
- Fiber optic cable type — 9/125 µm core diameter optical fiber
- Fiber optic mode — Single-mode, ELED compatible with HP HFBR-1315T transmitter and HP HFBR-2316T receiver
- Fiber optic cable length — Up to 11.4 km
- Fiber optic connector — Type ST
- Wavelength — 1300 ±40 nm
- Connection — As per all fiber optic connections, a Tx-to-Rx connection is required

The UR-series C37.94SM communication module can be connected directly to any compliant digital multiplexer that supports C37.94SM, as shown.

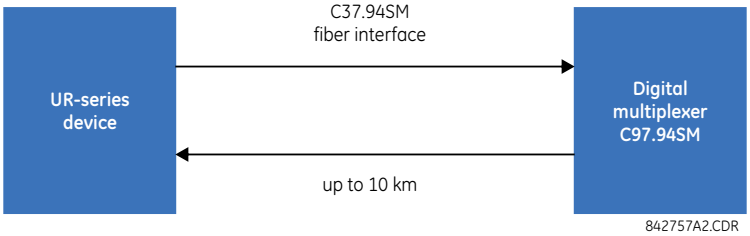

It also can be connected directly to any other UR-series relay with a C37.94SM module, as shown.

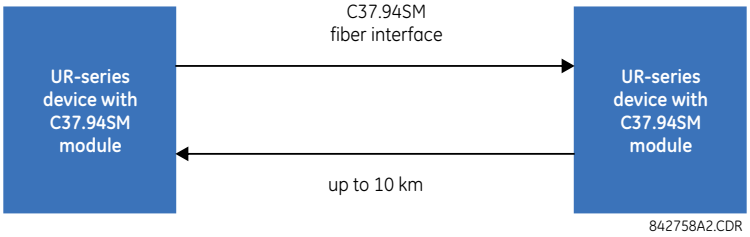

In 2008, GE Grid Solutions released revised modules 2A and 2B for C37.94SM communication to enable multi-ended fault location functionality with firmware 5.60 release and higher. All modules 2A and 2B shipped since the change support this feature and are fully backward compatible with firmware releases below 5.60. For customers using firmware release 5.60 and higher, the module can be identified with "Rev D" printed on the module and is to be used on all ends of F60 communication for two and three terminal applications. Failure to use it at all ends results in intermittent communication alarms. For customers using firmware revisions below 5.60, it is not required to match the revision of the modules installed.

The UR-series C37.94SM communication module has six switches that are used to set the clock configuration. The following figure shows the functions of these control switches.

Figure 3-56: Switches

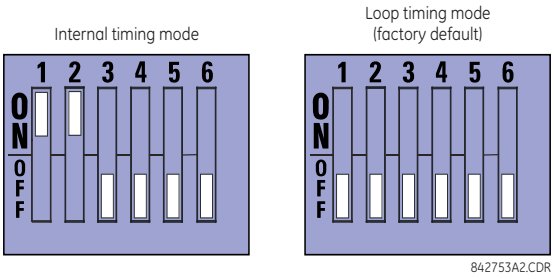

For the internal timing mode, the system clock is generated internally. Therefore, set the timing switch selection to internal timing for relay 1 and loop timed for relay 2. There must be only one timing source configured.

For the looped timing mode, the system clock is derived from the received line signal. Therefore, set the timing selection to loop timing mode for connections to higher-order systems.

The C37.94SM communications module cover removal procedure is as follows:

1. With power to the relay off, remove the C37.94SM module (module 2A or 2B) as follows. Record the original location of the module to help ensure that the same or replacement module is inserted into the correct slot.
2. Simultaneously pull the ejector/inserter clips located at the top and at the bottom of each module in order to release the module for removal.
3. Remove the module cover screw.
4. Remove the top cover by sliding it towards the rear and then lift it upwards.

5. Set the timing selection switches (channels 1 and 2) to the required timing modes (see description earlier).
6. Replace the top cover and the cover screw.
7. Re-insert the C37.94SM module. Take care to ensure that the **correct** module type is inserted into the **correct** slot position. The ejector/inserter clips located at the top and at the bottom of each module must be in the disengaged position as the module is inserted smoothly into the slot. Once the clips have cleared the raised edge of the chassis, engage the clips simultaneously. When the clips have locked into position, the module is inserted fully.

Figure 3-57: C37.94SM timing selection switch setting

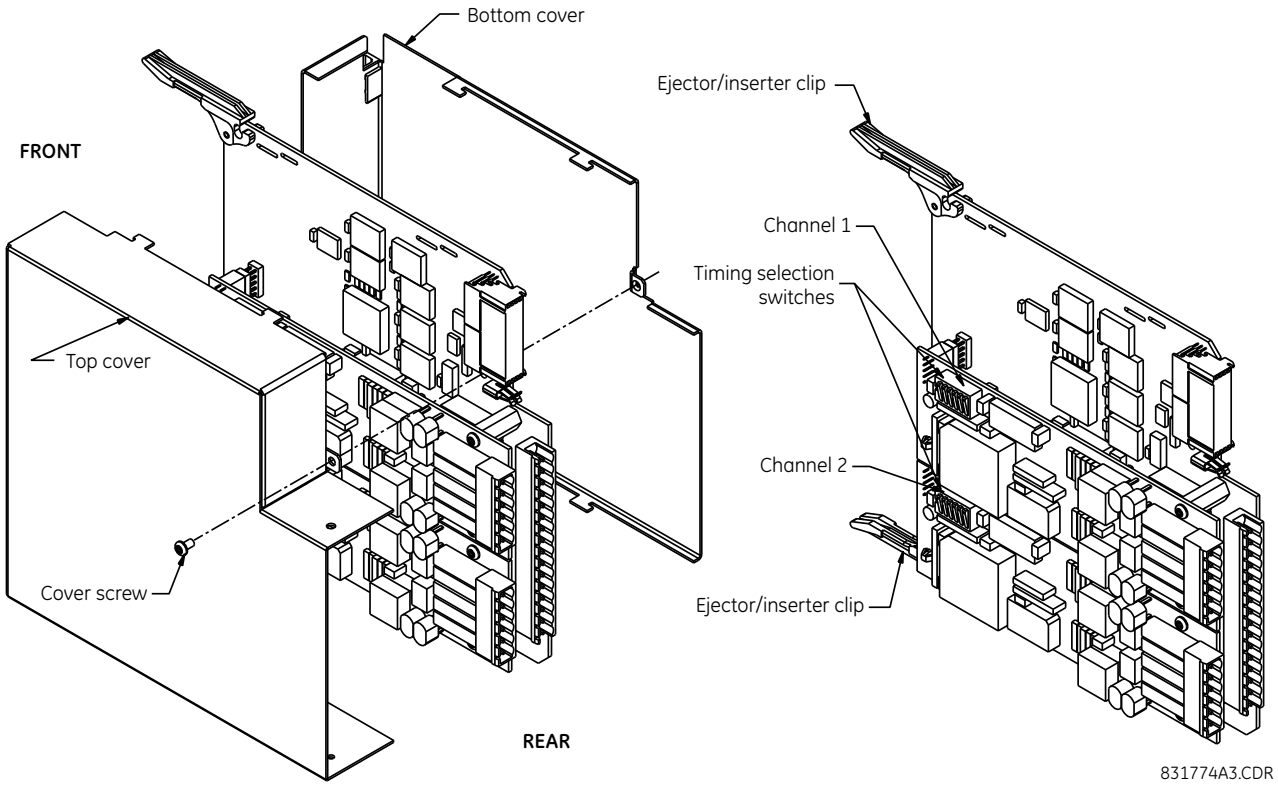

Modules shipped since January 2012 have status LEDs that indicate the status of the DIP switches, as shown in the following figure.

Figure 3-58: Status LEDs

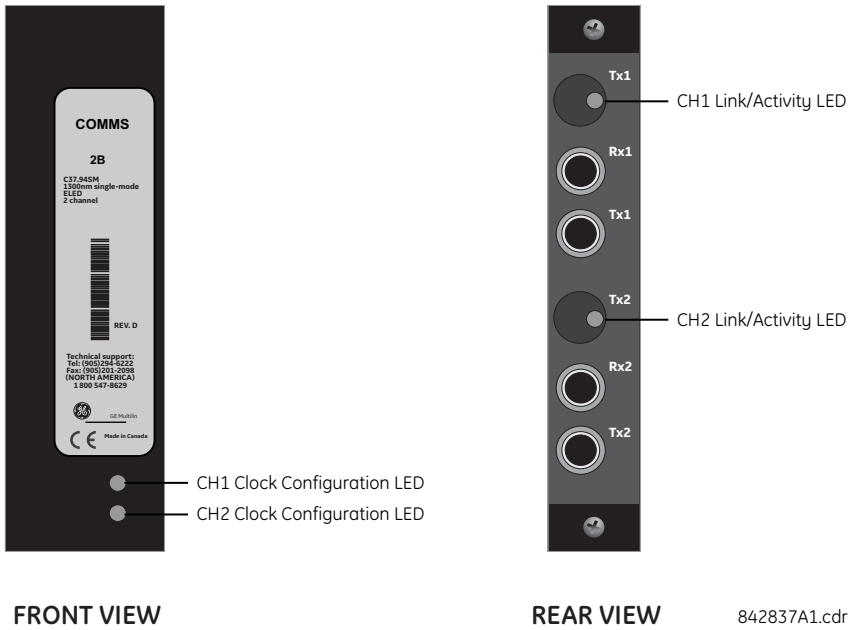

The clock configuration LED status is as follows:

- Flashing green — loop timing mode while receiving a valid data packet
- Flashing yellow — internal mode while receiving a valid data packet
- Solid red — (switch to) internal timing mode while not receiving a valid data packet

The link/activity LED status is as follows:

- Flashing green — FPGA is receiving a valid data packet
- Solid yellow — FPGA is receiving a "yellow bit" and remains yellow for each "yellow bit"
- Solid red — FPGA is not receiving a valid packet or the packet received is invalid

3.5 Activate relay

The relay is in the default “Not Programmed” state when it leaves the factory. When powered up successfully, the "Trouble" LED is on and the "In Service" LED is off. The relay in the “Not Programmed” state blocks signaling of any output relay. These conditions remain until the relay is explicitly put in the “Programmed” state.

RELAY SETTINGS: **Not Programmed**	When the relay is powered up, the "Trouble LED" is on, the "In Service" LED is off, and this message displays, indicating that the relay is in the "Not Programmed" state and is safeguarding (output relays blocked) against the installation of a relay whose settings have not been entered. This message remains until the relay is explicitly put in the "Programmed" state.

The relay can be activated on the front panel or in the EnerVista software.

To activate the relay using the front panel:

1. Press the **MENU** key until the **SETTINGS** header flashes momentarily and the **PRODUCT SETUP** message displays.
2. Press the **MESSAGE** right arrow until the **SECURITY** message displays.
3. Press the **MESSAGE** down arrow until the **INSTALLATION** message displays.
4. Press the **MESSAGE** right arrow until the **RELAY SETTINGS: Not Programmed** message displays.

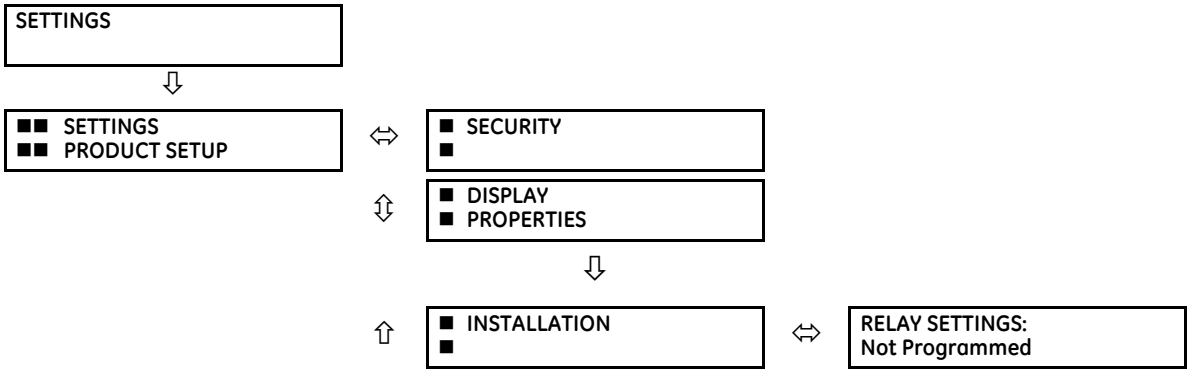

5. After the **RELAY SETTINGS: Not Programmed** message displays, press a **VALUE** key to change the selection to "Programmed."
6. Press the **ENTER** key to save the change.

7. When the "NEW SETTING HAS BEEN STORED" message appears, the relay is in "Programmed" state and the "In Service" LED turns on.

To activate the relay using EnerVista software:

1. Navigate to **Settings > Product Setup > Installation** and change the **Relay Settings** field to "Programmed."
2. Save the change.

3.6 Install software

3.6.1 EnerVista communication overview

The EnerVista UR Setup software communicates to the relay via the faceplate RS232 port or the rear panel RS485 / Ethernet ports.

To communicate via the faceplate RS232 port, use a standard straight-through serial cable. Connect the DB-9 male end to the relay and the DB-9 or DB-25 female end to the computer COM2 port as described in the CPU Communication Ports section earlier in this chapter.

Figure 3-59: Relay communication options

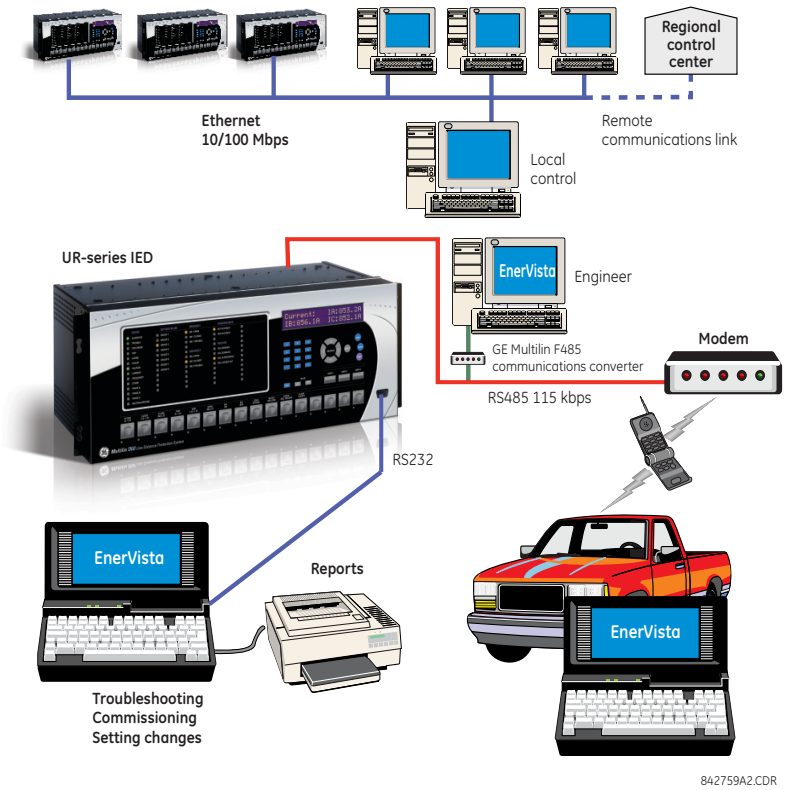

To communicate through the F60 rear RS485 port from a computer RS232 port, the GE Grid Solutions RS232/RS485 converter box is required. This device (catalog number F485) connects to the computer using a straight-through serial cable. A shielded twisted-pair (20, 22, or 24 AWG) connects the F485 converter to the F60 rear communications port. The converter terminals (+, –, GND) are connected to the F60 communication module (+, –, COM) terminals. See the CPU Communication Ports section in chapter 3 for details. The line is terminated with an R-C network (that is, 120 Ω, 1 nF) as described in this chapter.

3.6.2 System requirements

The relay front panel or the EnerVista UR Setup software can be used to communicate with the relay. The software interface is the preferred method to edit settings and view actual values because the computer monitor can display more information.

The minimum system requirements for the EnerVista software are as follows:

- Pentium 4 (Core Duo recommended)
- Windows XP with Service Pack 2 (Service Pack 3 recommended) or Windows 7, or Windows Server 2008 Release 2 64-bit, in the required EnerVista language
- 1 GB of RAM (2 GB recommended)
- 500 MB free hard drive space (1 GB recommended)
- 1024 x 768 display (1280 x 800 recommended)
- Serial port
- Ethernet port of the same type as one of the UR CPU ports or a LAN connection to the UR
- Internet access or a DVD drive

The following qualified modems have been tested to be compatible with the F60 and the EnerVista software:

- US Robotics external 56K FaxModem 5686

- US Robotics external Sportster 56K X2
- PCTEL 2304WT V.92 MDC internal modem

3.6.3 Install software

After ensuring that the requirements for using EnerVista UR Setup software are met, install the software from the DVD, or download EnerVista Launchpad software from http://www.gegridsolutions.com/multilin and install it.

Install on a computer that has an operating system in the required language, for example a German operating system for use with EnerVista software in German.

To install the UR EnerVista software from the DVD:

1. Insert the DVD into the DVD drive of your computer.
2. Click the **Install Now** button and follow the instructions.
3. When installation is complete, start the EnerVista Launchpad application.
4. Click the **IED Setup** section of the **Launch Pad** window.

Figure 3-60: Adding a UR device in Launchpad window

5. In the EnerVista Launch Pad window, click the **Add Product** button and select the appropriate product as follows. Select the **Web** option to ensure the most recent software release, or select **CD** if you do not have an Internet connection, then click the **Add Now** button to list software items for the product. EnerVista Launchpad obtains the software from the Internet or DVD and automatically starts the installation program.

Figure 3-61: Identifying the UR device type

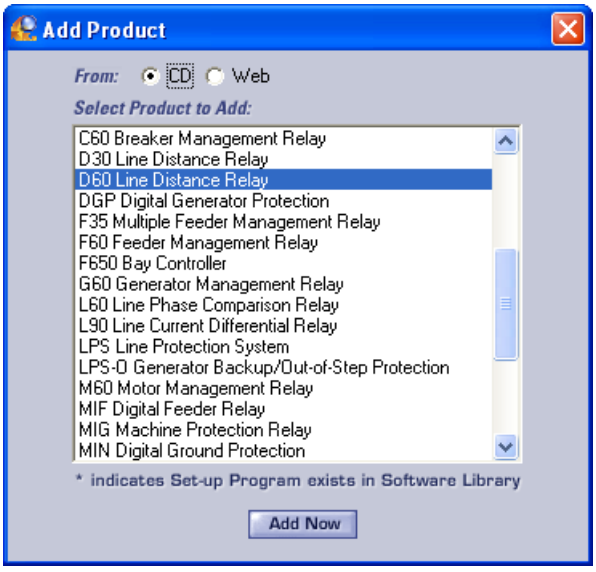

6. Select the complete path, including the new directory name, where the EnerVista UR Setup software is to be installed.
7. Click the **Next** button to begin the installation. The files are installed in the directory indicated, and the installation program automatically creates icons and adds an entry to the Windows start menu.

8. Click **Finish** to complete the installation. The UR device is added to the list of installed intelligent electronic devices (IEDs) in the EnerVista Launchpad window, as shown.

Figure 3-62: UR device added to Launchpad window

3.7 Configure the F60 for software access

You connect remotely to the F60 through the rear RS485 or Ethernet port with a computer running the EnerVista UR Setup software. The F60 also can be accessed locally with a computer through the front panel RS232 port or the rear Ethernet port using the Quick Connect feature.

- To configure the F60 for remote access via the rear RS485 port, see the next section.
- To configure the F60 for remote access via the rear Ethernet port, see the Configure Ethernet Communication section.
- To configure the F60 for local access with a computer through either the front RS232 port or rear Ethernet port, see the Connect to the F60 section.
- To discover automatically UR devices and configure the software for them, see the Automatic Discovery of UR Devices section.

The devices are listed alphabetically in the main software window, for example B30, B90, T35. Use the **Device Name** to order them as required, for example B30 Odessa, B30 Truro, B90, T35.

Devices are listed in the order entered in the Device Setup window.

You cannot import a file to add a device to the software. You can import settings as outlined at the end of the chapter.

Implement IP addresses for the computer and a F60 device as follows.

The UR family supports the use of subnetworks as documented in RFC 950, which divides class-based networks into subnetworks (non-CIDR). The classes and IP address ranges are defined as follows.

Table 3-7: IP address classes

Classes	IP address range	Default subnet mask address	UR devices
A	1.0.0.0 to 127.255.255.255	255.0.0.0	65,535 or more
B	128.0.0.0 to 191.255.255.255	255.255.0.0	255 to 65,534
C	192.0.0.0 to 223.255.255.255	255.255.255.0	0 to 254
D	224.0.0.0 to 239.255.255.255	(Reserved for multicasting)	
E	240.0.0.0 to 255.255.255.255	(Reserved)	

Both network and subnet addresses are contained within a range. The number of hosts determines the class and addresses as follows:

- Class A 255.0.0.0 — The first octet (255) specifies the network, the second to fourth octets (0) specify the subnet and host. Use this class when you have more than 65,535 hosts (UR devices).
- Class B 255.255.0.0 — The first two octets (255) specify the network, the third octet (0) specifies the subnet, and the fourth octet (0) specifies the host. Use this class when you have 255 to 65,534 hosts (UR devices).

- Class C 255.255.255.0 — The first three octets (255) specify the network and the last octet (0) specifies the subnet and host. Use this class when you have up to 254 hosts (UR devices).

An example of implementation is one computer and one UR device. Because there is one UR device, class C addressing is required. So we use UR 192.167.2.x with subnet mask 255.255.255.0 and computer 192.167.3.x with subnet mask 255.255.255.0.

For older, non-CIDR routing protocols, follow these restrictions:

- Identical subnet masks — Use a single mask for all subnets within a network
- Contiguous subnets — The subnets must be contiguous and not split among networks. The subnets cannot pass traffic through other networks.

3.7.1 Configure serial communication

Two options are possible: local connection between computer and front RS232 port, and remote connection using the rear RS485 port.

For the RS232 connection, a computer with an RS232 port and a serial cable are required.

To use the RS485 port at the back of the relay, a GE Grid Solutions F485 converter (or compatible RS232-to-RS485 converter) is required. See the F485 instruction manual for details.

1. Connect the computer to the F485 and the F485 to the RS485 terminal on the back of the UR device, or connect the computer to the RS232 port on the front of the relay.
2. In the EnerVista Launchpad software on the computer, select the UR device to start the software.
3. Click the **Device Setup** button to open the Device Setup window, and click the **Add Site** button to define a new site.
4. Enter a site name in the **Site Name** field. Optionally add a short description of the site along with the display order of devices defined for the site. This example uses "Location 1" as the site name. When done, click the **OK** button. The new site appears in the upper-left list in the EnerVista UR Setup window.
5. Click the **Device Setup** button, then select the new site to re-open the Device Setup window.
6. Click the **Add Device** button to define the new device.
7. Enter a name in the **Device Name** field and a description (optional) of the site.
8. Select "Serial" from the **Interface** drop-down list. This displays a number of interface parameters that must be entered for serial communications.

Figure 3-63: Configuring serial communication

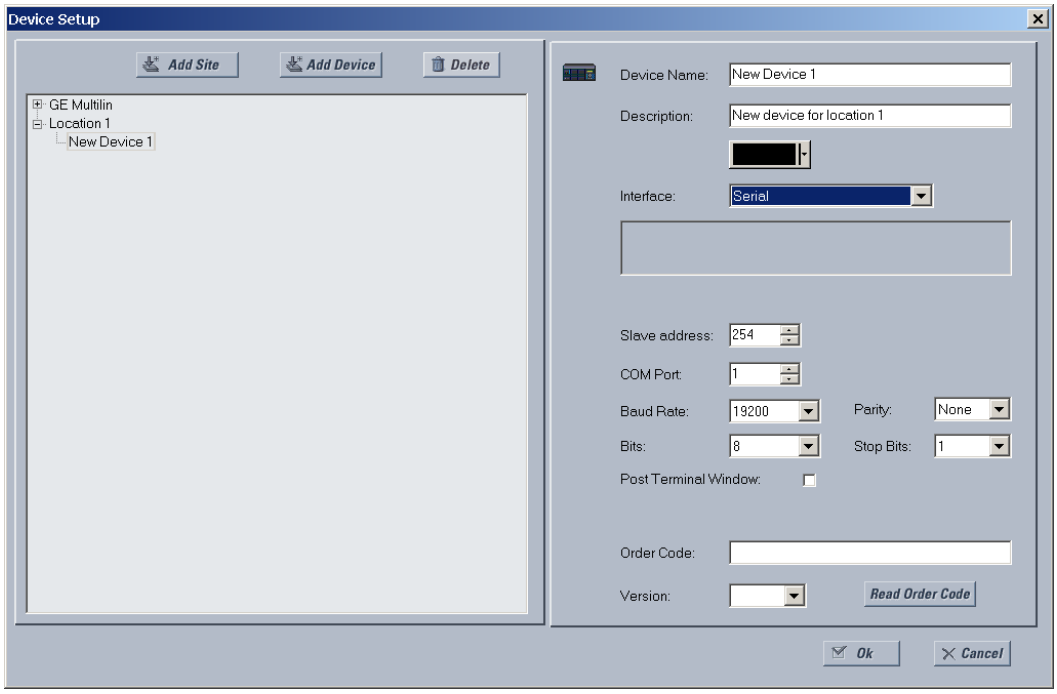

9. Enter the COM port used by the computer, the baud rate, and parity settings from the front panel **SETTINGS ⇨ PRODUCT SETUP ⇨⇩ COMMUNICATIONS ⇨ SERIAL PORTS** menu, and the relay slave address setting from the front panel **SETTINGS ⇨ PRODUCT SETUP ⇨⇩ COMMUNICATIONS ⇨⇩ MODBUS PROTOCOL ⇨ MODBUS SLAVE ADDRESS** menu in their respective fields.

   Baud Rate — Typically19200 for RS232 and higher for RS485

   Parity — Set to None if unsure

   Bits — Set to 8 if unsure

   Stop Bits — Set to 1 if unsure

10. Click the **Read Order Code** button to connect to the F60 and upload the order code to the software. If a communications error occurs, ensure that the EnerVista UR Setup serial communications values entered in the previous step correspond to the relay setting values.
11. Click the **OK** button when the relay order code has been received. The new device is added to the Site List window (or Online window) located in the top left corner of the main EnerVista UR Setup window.

The device has now been configured for RS232 communications. Proceed to the Connect to the F60 section to begin communication.

3.7.2 Configure Ethernet communication

You connect the cable, define a site in the software, then add the relay as a device for the site. The computer and UR device must be on the same subnet.

1. Connect the Ethernet network cable to the Ethernet port on the back of the device.
2. On the computer, select the UR device from the EnerVista Launchpad to start EnerVista UR Setup.
3. Click the **Device Setup** button to open the Device Setup window, then click the **Add Site** button to define a new site.
4. Enter a site name in the "Site Name" field. If wanted, a short description of site can also be entered along with the display order of devices defined for the site. In this example, we use "Location 2" as the site name. Click the **OK** button when complete.

   The new site appears in the upper-left list in the EnerVista UR Setup window.

5. Click the **Device Setup** button then select the new site to re-open the Device Setup window.
6. Click the **Add Device** button to define the new device.
7. Enter a name in the "Device Name" field and a description (optional) of the site.
8. Select "Ethernet" from the **Interface** drop-down list. This displays a number of interface parameters that must be entered for proper Ethernet functionality.

Figure 3-64: Configuring Ethernet communication

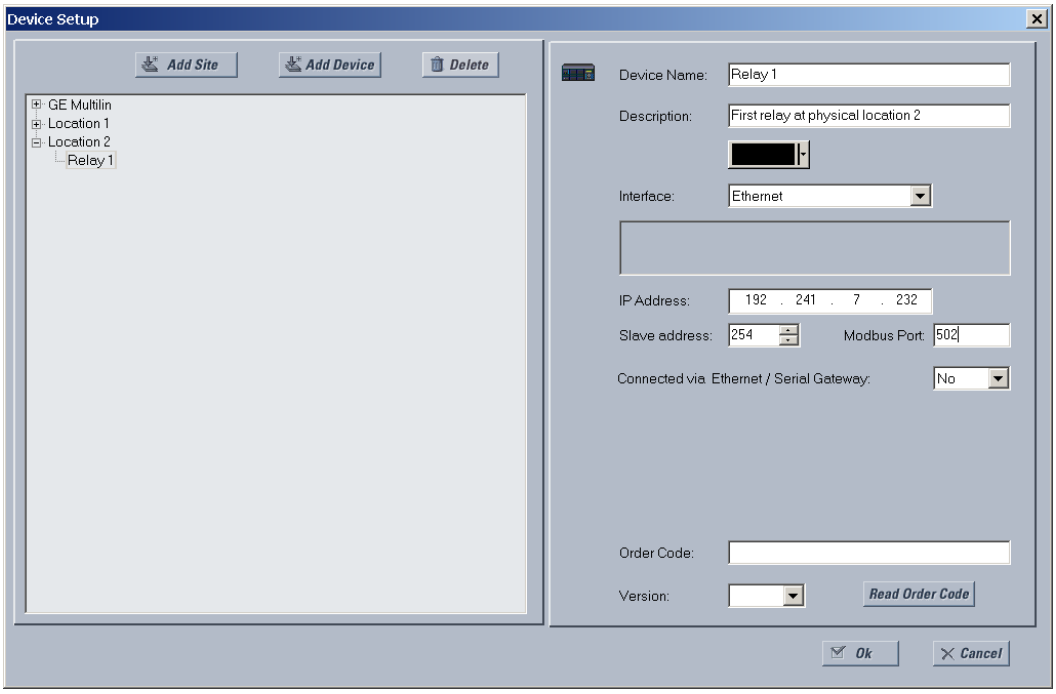

9. Enter the relay IP address specified in the front panel **SETTINGS** ⇨ **PRODUCT SETUP** ⇩⇨ **COMMUNICATIONS** ⇩⇨ **NETWORK** ⇨ **IP ADDRESS** in the **IP Address** field.
10. Enter the relay slave address and Modbus port address values from the respective settings in the front panel **SETTINGS** ⇨ **PRODUCT SETUP** ⇩⇨ **COMMUNICATIONS** ⇩⇨**MODBUS PROTOCOL** menu.
11. Click the **Read Order Code** button to connect to the F60 device and upload the order code. If an communications error occurs, ensure that the three EnerVista UR Setup values entered in the previous steps correspond to the relay setting values.
12. Click **OK** when the relay order code has been received. The new device is added to the Site List window (or Online window) located in the top left corner of the main EnerVista UR Setup window.

The Site Device has now been configured for Ethernet communications. Proceed to the Connect to the F60 section to begin communications.

3.7.3 Automatic discovery of UR devices

The EnerVista UR Setup software can automatically discover and communicate to all UR-series IEDs located on an Ethernet network.

Using the **Discover** button in the **Device Setup** window, a single click of the mouse triggers the software to detect automatically any UR-series relays located on the network. The EnerVista UR Setup software then proceeds to configure all settings and order code options in the window. This feature allows the user to identify and interrogate all UR-series devices at a location.

To discover UR devices:

1. In EnerVista, click the **Device Setup** button.

2. In the window that opens, click the **Discover** button. If the required device is not found, add it manually as outlined earlier.

Figure 3-65: Discover button to detect UR devices in network

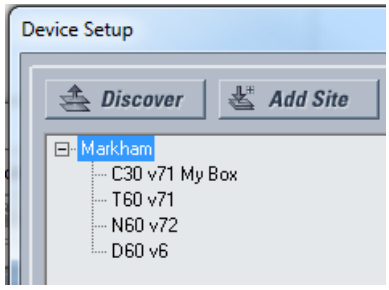

3.8 Connect to the F60

There are four ways to the connect to the device, as follows:

- RS232 port (outlined here)
- RS485 port
- Ethernet port (outlined here)
- LAN

When unable to connect because of an "ACCESS VIOLATION," access **Device Setup** and refresh the order code for the device.

NOTE

When multiple computers are connected to a F60 device, EnerVista settings windows are not updated automatically. They are refreshed when re-opened. If a user changes a setting on one computer, the other users need to refresh the display by closing and opening the settings window to see the change. To ensure that current settings are always viewed, close settings windows when not in use so that they are up-to-date when next accessed.

3.8.1 Connect to the F60 in EnerVista

For information on using the EnerVista software, see the Interfaces chapter.

To access the relay in EnerVista:

1. Open the **Settings > Product Setup > Display Properties** window as shown. The window opens with a status indicator on the lower left of the EnerVista UR Setup window.

Figure 3-66: EnerVista window

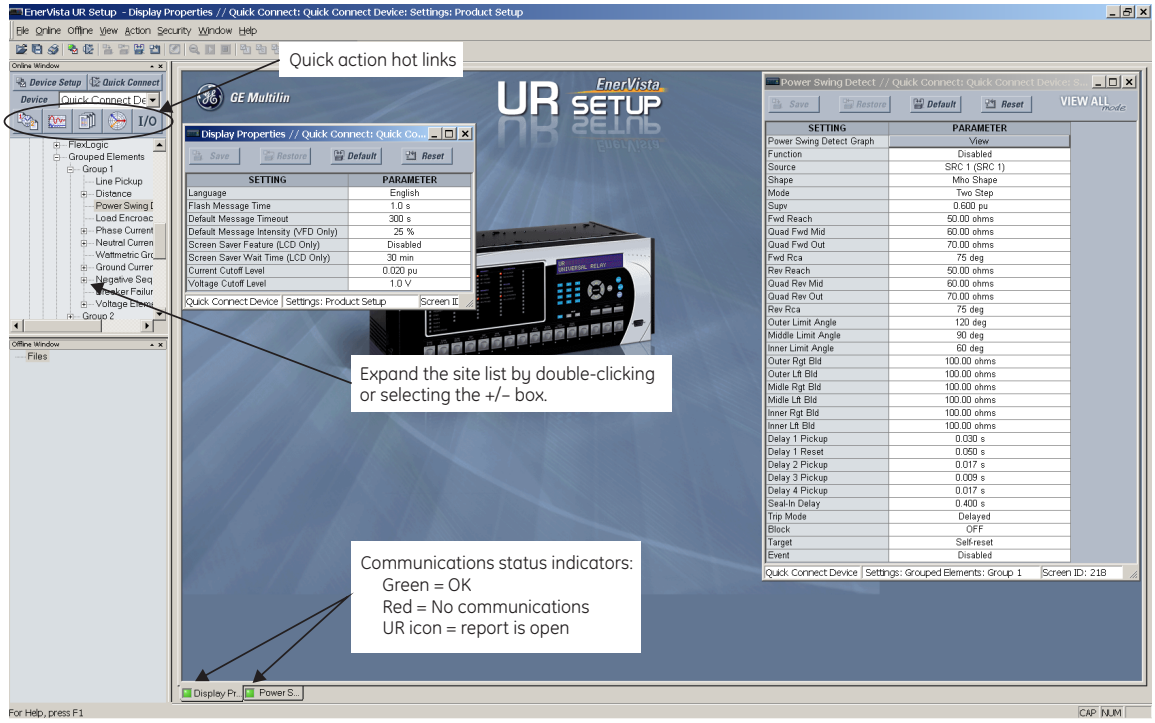

842743A3.CDR

2. If the status indicator is red, verify that the Ethernet network cable is properly connected to the Ethernet port on the back of the relay and that the relay has been properly set up for communications (steps A and B earlier).
3. If a relay icon appears in place of the status indicator, then a report (such as an oscillography or event record) is open. Close the report to re-display the green status indicator.
4. The Display Properties settings can now be viewed, edited, or printed.

3.8.1.1 Quick action hot links

The EnerVista UR Setup software has several quick action buttons to provide instant access to several functions that are performed often when using URs. From the online window, users can select the relay to interrogate from a pull-down window, then click the button for the action to perform. The following quick action functions are available:

- View the event record
- View the last recorded oscillography record
- View the status of all F60 inputs and outputs
- View all of the F60 metering values
- View the F60 protection summary
- Generate a service report

3.8.2 Use Quick Connect via the front panel RS232 port

To connect to the UR from a computer using a serial cable:

1. Connect an RS232 serial cable to the computer and the front panel RS232 port.
2. Select the UR device from the EnerVista Launchpad to start EnerVista UR Setup.
3. Click the **Quick Connect** button to open the window.

Figure 3-67: Quick Connect window to access a device

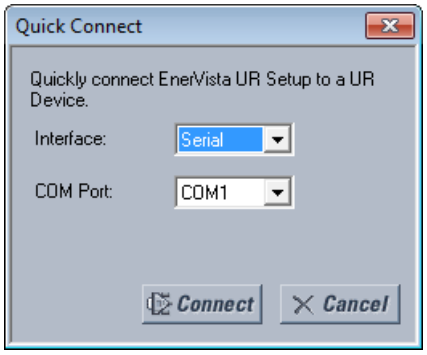

4. Select the **Serial** interface and the correct COM Port, then click **Connect**.
5. The EnerVista UR Setup software creates a site named "Quick Connect" with a corresponding device also named "Quick Connect" and displays them on the left side of the screen. Expand the sections to view data directly from the F60 device. Use the **Device Setup** button to change the site names.

Each time that the EnerVista UR Setup software is initialized, click the **Quick Connect** button to establish direct communications to the F60. This ensures that configuration of the EnerVista UR Setup software matches the F60 model number.

3.8.3 Use Quick Connect via a rear Ethernet port

To use the Quick Connect feature to access the F60 from a computer through Ethernet, first assign an IP address to the relay using the front panel keyboard.

1. Press the **MENU** key until the **Settings** menu displays.
2. Navigate to **Settings** ⇨ **Product Setup** ⇩⇨ **Communications** ⇩⇨ **Network** ⇨ **IP Address Setting**.
3. Enter an IP address, for example "1.1.1.1," and press the **ENTER** key to save the value.
4. In the same menu, select the **Subnet IP Mask** setting.
5. Enter a subnet IP address, for example "255.0.0.0," and press the **ENTER** key to save the value.

If using a blue or grey Ethernet cable, skip the rest of the this section. If using an orange cross-over Ethernet cable, the computer needs to be set up as follows.

1. Use an orange Ethernet cross-over cable to connect the computer to the rear Ethernet port. In case you need it, the following figure shows the pinout for an Ethernet cross-over cable.

Figure 3-68: Ethernet cross-over cable PIN layout

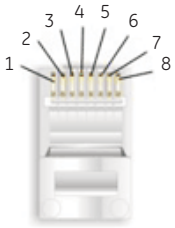

END 1		
Pin	**Wire color**	**Diagram**
1	White/orange	
2	Orange	
3	White/green	
4	Blue	
5	White/blue	
6	Green	
7	White/brown	
8	Brown	

END 2		
Pin	**Wire color**	**Diagram**
1	White/green	
2	Green	
3	White/orange	
4	Blue	
5	White/blue	
6	Orange	
7	White/brown	
8	Brown	

842799A1.CDR

Next, assign the computer an IP address compatible with the relay's IP address.

1. From the Windows desktop, right-click the **My Network Places** icon and select **Properties** to open the network

connections window. Or in Windows 7, access the **Network and Sharing Center** in the Control Panel.

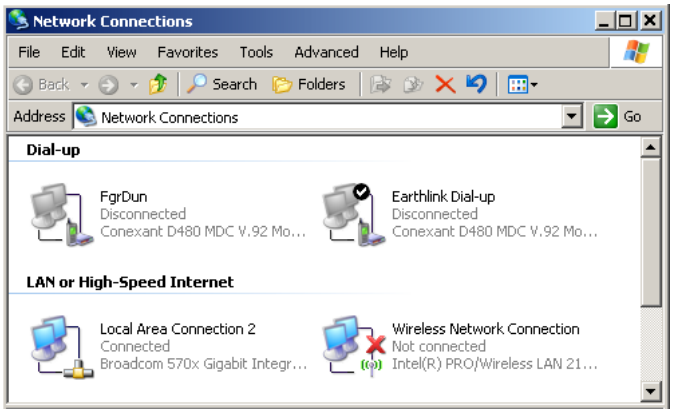

2. Right-click the **Local Area Connection** icon and select **Properties**.

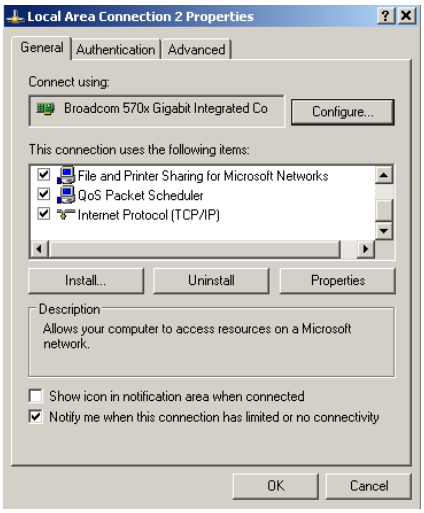

3. Select the **Internet Protocol (TCP/IP)** item from the list, and click the **Properties** button.

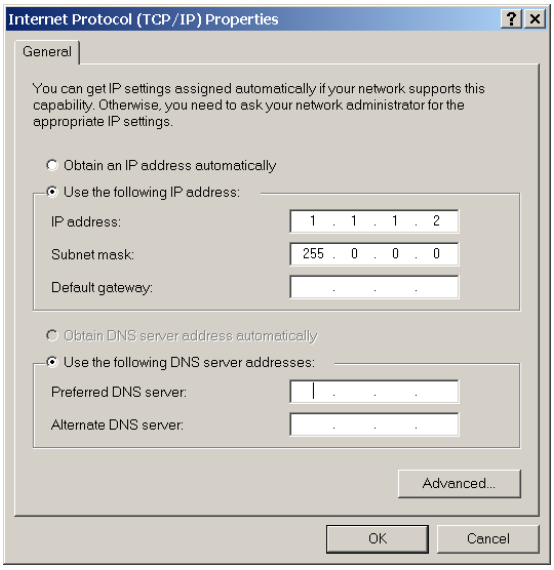

4. Click the "Use the following IP address" box.
5. Enter an **IP address** with the first three numbers the same as the IP address of the F60 relay and the last number different (in this example, 1.1.1.2).
6. Enter a subnet mask equal to the one set in the F60 (in this example, 255.0.0.0).
7. Click the **OK** button to save the values.

Before continuing, test the Ethernet connection.

1. Open a Windows console window, for example by selecting **Start > Run** from the Windows **Start** menu and typing "cmd" or clicking the **Start** button and entering "cmd".
2. Type the following command, substituting the IP address of 1.1.1.1 with yours:

```
C:\WINNT>ping 1.1.1.1
```

3. If the connection is successful, the system returns four replies similar to the following:

```
Pinging 1.1.1.1 with 32 bytes of data:
Reply from 1.1.1.1: bytes=32 time<10ms TTL=255
Reply from 1.1.1.1: bytes=32 time<10ms TTL=255
Reply from 1.1.1.1: bytes=32 time<10ms TTL=255
Reply from 1.1.1.1: bytes=32 time<10ms TTL=255
Ping statistics for 1.1.1.1:
    Packets: Sent = 4, Received = 4, Lost = 0 (0% loss),
Approximate round trip time in milliseconds:
    Minimum = 0ms, Maximum = 0ms, Average = 0 ms
```

4. Note that the values for `time` and `TTL` vary depending on local network configuration.
5. If the following sequence of messages appears when entering the `C:\WINNT>ping 1.1.1.1` command:

```
Pinging 1.1.1.1 with 32 bytes of data:
Request timed out.
Request timed out.
Request timed out.
Request timed out.
Ping statistics for 1.1.1.1:
    Packets: Sent = 4, Received = 0, Lost = 4 (100% loss),
Approximate round trip time in milliseconds:
    Minimum = 0ms, Maximum = 0ms, Average = 0 ms
Pinging 1.1.1.1 with 32 bytes of data:
```

   verify the physical connection between the F60 and the computer, and double-check the programmed IP address in the **Product Setup** ⇨⇩ **Communications** ⇨⇩ **Network** ⇨ **IP Address** setting, then repeat step 2.

6. If the following sequence of messages appears when entering the `C:\WINNT>ping 1.1.1.1` command:

```
Pinging 1.1.1.1 with 32 bytes of data:
Hardware error.
Hardware error.
Hardware error.
Hardware error.
Ping statistics for 1.1.1.1:
    Packets: Sent = 4, Received = 0, Lost = 4 (100% loss),
Approximate round trip time in milliseconds:
    Minimum = 0ms, Maximum = 0ms, Average = 0 ms
Pinging 1.1.1.1 with 32 bytes of data:
```

   verify the physical connection between the F60 and the computer, and double-check the programmed IP address in the **PRODUCT SETUP** ⇨⇩ **COMMUNICATIONS** ⇨⇩ **NETWORK** ⇨ **IP ADDRESS** setting, then repeat step 2.

7. If the following sequence of messages appears when entering the `C:\WINNT>ping 1.1.1.1` command:

```
Pinging 1.1.1.1 with 32 bytes of data:
Destination host unreachable.
Destination host unreachable.
Destination host unreachable.
Destination host unreachable.
```

```
Ping statistics for 1.1.1.1:
    Packets: Sent = 4, Received = 0, Lost = 4 (100% loss),
Approximate round trip time in milliseconds:
    Minimum = 0ms, Maximum = 0ms, Average = 0 ms
Pinging 1.1.1.1 with 32 bytes of data:
```

verify the IP address is programmed in the local computer by entering the ipconfig command in the command window.

```
C:\WINNT>ipconfig
Windows IP Configuration
Ethernet adapter <F4FE223E-5EB6-4BFB-9E34-1BD7BE7F59FF>:
        Connection-specific DNS suffix. . :
        IP Address. . . . . . . . . . . . : 0.0.0.0
        Subnet Mask . . . . . . . . . . . : 0.0.0.0
        Default Gateway . . . . . . . . . :
Ethernet adapter Local Area Connection:
        Connection-specific DNS suffix  . :
        IP Address. . . . . . . . . . . . : 1.1.1.2
        Subnet Mask . . . . . . . . . . . : 255.0.0.0
        Default Gateway . . . . . . . . . :
C:\WINNT>
```

Before using the Quick Connect feature through the Ethernet port, disable any configured proxy settings in Internet Explorer.

1. Start the Internet Explorer software.
2. Select the **Tools > Internet Options** menu item and click the **Connections** tab.
3. Click on the **LAN Settings** button to open the following window.

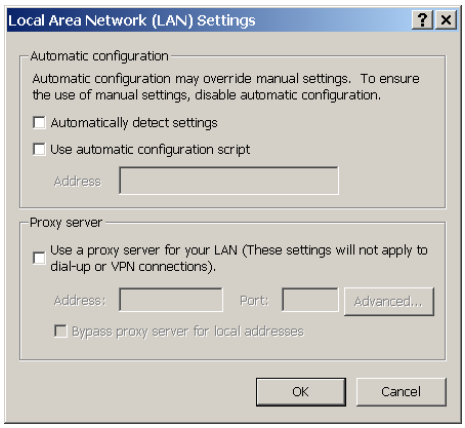

4. Ensure that the "Use a proxy server for your LAN" box is not checked.

If this computer is used to connect to the Internet, re-enable any proxy server settings after the computer has been disconnected from the F60 relay.

1. Start the Internet Explorer software.
2. Select the UR device from the EnerVista Launchpad to start EnerVista UR Setup.

3. Click the **Quick Connect** button to open the window.

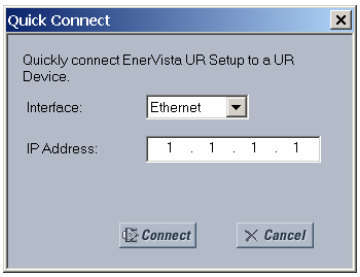

4. Select the **Ethernet** interface and enter the IP address assigned to the F60, then click the **Connect** button. The EnerVista UR Setup software creates a site named "Quick Connect" with a corresponding device also named "Quick Connect" and displays them on the left side of the screen.
5. Expand the sections to view data directly from the F60 device.

Each time that the EnerVista UR Setup software is initialized, click the **Quick Connect** button to establish direct communications to the F60. This ensures that configuration of the EnerVista UR Setup software matches the F60 model number.

When direct communications with the F60 via Ethernet is complete, make the following changes:

1. From the Windows desktop, right-click the **My Network Places** icon and select **Properties** to open the network connections window.
2. Right-click the **Local Area Connection** icon and select the **Properties** item.
3. Select the **Internet Protocol (TCP/IP)** item from the list provided and click the **Properties** button.
4. Set the computer to "Obtain a relay address automatically" as shown.

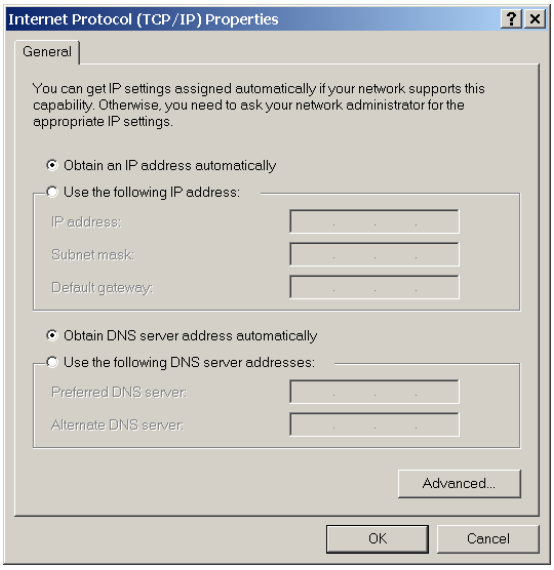

If the computer is used to connect to the Internet, re-enable any proxy server settings after the computer has been disconnected from the F60 relay.

3.9 Set up CyberSentry and change default password

If and when first using CyberSentry security, use the following procedure for set up.

1. Log in to the relay as Administrator by using the **VALUE** keys on the front panel or through EnerVista connected serially (so that no IP address is required). If logging in through EnerVista choose Device authentication (see figure). Enter the default password "ChangeMe1#". Note that the "Lock relay" setting needs to be disabled in the **Security > Supervisory** menu. When this setting is disabled, configuration and firmware upgrade are possible. By default, this setting is disabled.
2. Enable the Supervisor role if you have a need for it.
3. Make any required changes in configuration, such as setting a valid IP address for communication over Ethernet.
4. Log out of the Administrator account by choosing None.

Next, device or server authentication can be chosen on the login screen, but the choice is available only in EnerVista. Use Device authentication to log in using the five pre-configured roles (Administrator, Supervisor, Engineer, Operator, Observer, or Administrator and Supervisor when Device authentication is disabled). When using a serial connection, only Device authentication is supported. When Server authentication is required, characteristics for communication with a RADIUS server must be configured on the UR. This is possible only through the EnerVista software. The RADIUS server itself also must be configured. At the end of this instruction manual, the appendix called RADIUS Server Configuration gives an example of how to set up a simple RADIUS server. Once both the RADIUS server and the parameters for connecting the UR to the server have been configured, you can choose Server authentication on the login screen of EnerVista.

Figure 3-69: Login screen for CyberSentry

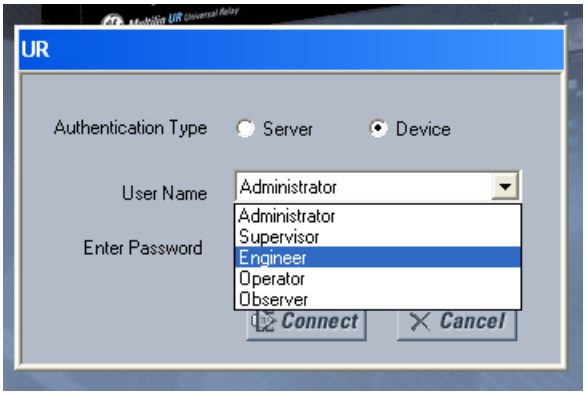

During the commissioning phase, you have the option to bypass the use of passwords. Do so by enabling the **Bypass Access** setting under **Settings > Product Setup > Security > Supervisory**. Be sure to disable this bypass setting after commissioning the device.

You can change the password for any role either from the front panel or through EnerVista. If using EnerVista, navigate to **Settings > Product Setup > Security**. Change the **Local Administrator Password**, for example. It is strongly recommended that the password for the Administrator be changed from the default. Changing the passwords for the other three roles is optional.

F60 Feeder Protection System

Chapter 4: Interfaces

This chapter explains the EnerVista software interface, the front panel interface, and logic diagrams.

4.1 EnerVista software interface

4.1.1 Introduction

The EnerVista UR Setup software provides a single facility to configure, monitor, maintain, and troubleshoot relay functions, connected over local or wide-area networks. It can be used while disconnected (offline) or connected (online) to a UR device. In offline mode, settings files can be created for eventual downloading to the device. In online mode, communication with the device is real-time.

The EnerVista UR Setup software is provided with every F60. This chapter outlines the EnerVista software interface features. The EnerVista UR Setup help file in the software also provides details for getting started and using the software interface.

4.1.2 Settings files

The EnerVista software supports the following three ways of handling changes to relay settings:

- In offline mode (relay disconnected) to create or edit relay settings files for later download to relays
- While connected to a relay to modify relay settings, and then save the settings to the relay
- Create/edit settings files and then write them to the relay while connected to the relay

Settings files are organized on the basis of file names assigned by the user. A settings file contains data pertaining to the following types of relay settings:

- Device definition
- Product setup
- System setup
- FlexLogic
- Grouped elements
- Control elements
- Inputs/outputs
- Remote resources

- Testing

Factory default values are supplied and can be restored after any changes.

The following communications settings are not transferred to the F60 with settings files:

Modbus Slave Address
Modbus TCP Port Number
RS485 COM2 Baud Rate
RS485 COM2 Parity
COM2 Minimum Response Time
COM2 Selection
RRTD Slave Address
RRTD Baud Rate
IP Address
IP Subnet Mask
IP Routing

When a settings file is loaded to a F60 that is in-service, the following sequence occurs:

1. The F60 takes itself out of service.
2. The F60 issues a UNIT NOT PROGRAMMED major self-test error.
3. The F60 closes the critical fail contact.

The Maintenance chapter outlines how to use a settings file in the .urs format for backup and restore.

4.1.3 Event viewing

While the interface is in online or offline mode, you can view and analyze data generated by triggered parameters as follows:

- **Event recorder** — The event recorder captures contextual data associated with the last 1024 events, listed chronologically from most recent to oldest
- **Oscillography** — The oscillography waveform traces and digital states are used to provide a visual display of power system and relay operation data captured during specific triggered events

Event records are viewable at software and device-specific levels. Access the former under **Admin > Event Log > View**. Access the latter under **Actual Values > Records > Event Record**.

Event record entries for CyberSentry are explained in the next chapter. The following table outlines some software-level entries.

Table 4-1: Event record descriptions

Event	Description
EnerVista UR Setup SESSION STARTED	The EnerVista software was launched
Language was changed.	The user changed the software language using the **View > Language** menu item
DEFAULT USERS CREATED	The user management window was launched using the **Admin > User Management** menu item
: Successful upload of firmware END Firmware verified Firmware uploaded Firmware erased START: Upload new firmware	The firmware on a device was upgraded
EnerVista UR Setup EVENT LOG CLEARED	The event record was cleared. All event records were deleted using the **Admin > Event Log > Clear** menu item.

4.1.4 File support

The following support applies, where the Settings List is at the bottom left and the Site List is at the top left of the EnerVista window:

- **Execution** — Any EnerVista UR Setup file that is opened launches the application or provides focus to the already opened application. If the file was a settings file (has a .urs extension) that had been removed from the Settings List navigation menu, it is added back to the menu.
- **Drag and Drop** — The device settings and individual settings can be dragged and dropped between the Online and Offline Window areas. Also, any Windows Explorer directory folder is a file drag source and drop target.

  New files that are dropped into the Offline Window are added to the tree, which is automatically sorted alphabetically with respect to settings file names. In the Online Window, files or individual menu items that are dropped in the selected device menu are sent automatically to the online device.

4.1.5 EnerVista main window

The EnerVista UR Setup software window has the following components:

1. Title bar that shows the pathname of the active data view or the name of the software
2. Main window menu bar
3. Main window tool bar
4. Site list / online window area
5. Settings list / offline window area
6. Software windows, with common tool bar
7. Settings file data view windows, with common tool bar
8. Workspace area with data view tabs
9. Status bar
10. Quick action hot links

Figure 4-1: EnerVista UR Setup software window

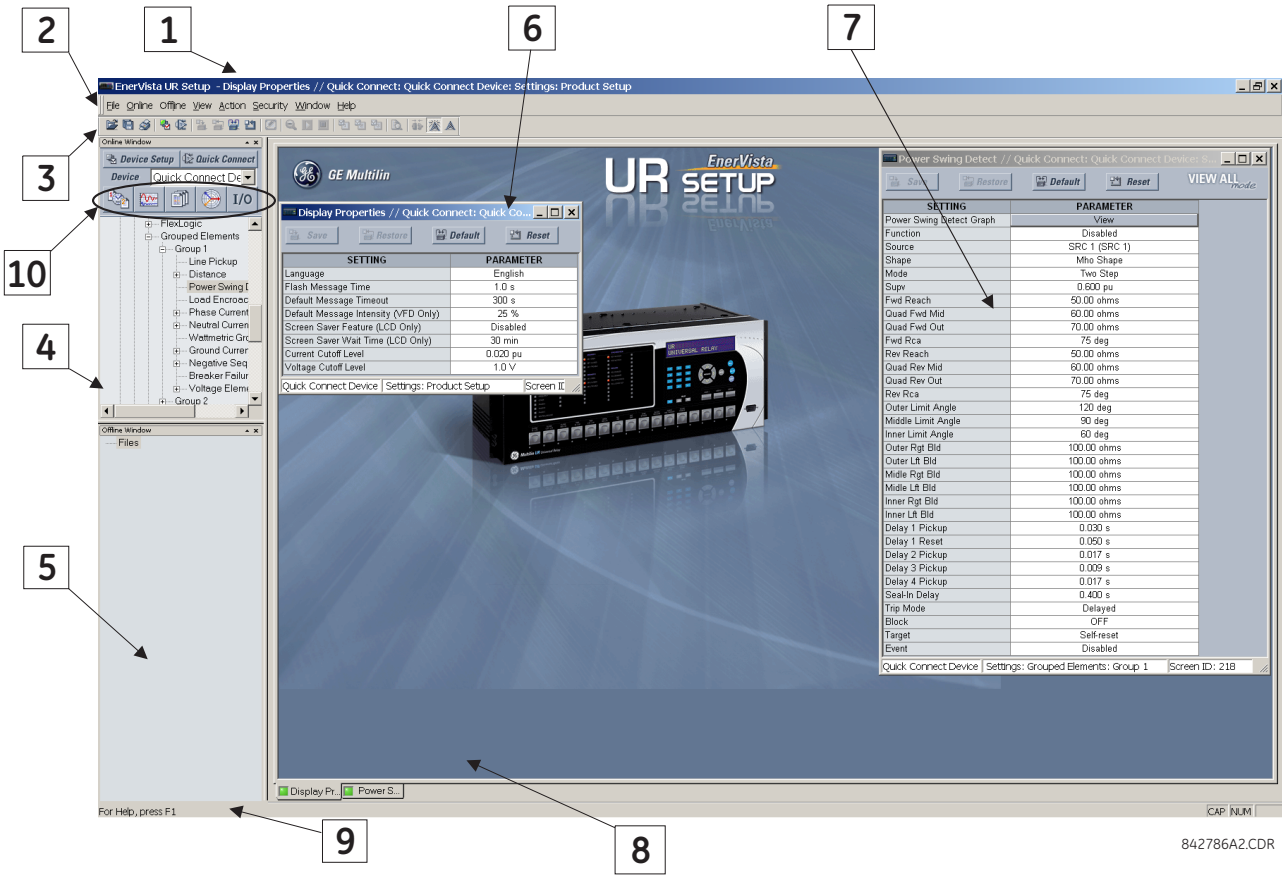

4.1.6 Settings templates

Settings file templates simplify the configuration and commissioning of multiple relays that protect similar assets. An example is a substation that has 10 similar feeders protected by 10 UR F60 relays.

In these situations, typically 90% or greater of the settings are identical among devices. The templates allow engineers to configure and test these common settings, then lock them so that they are not available to users. For example, locked settings can be hidden from view for field engineers, allowing them to quickly identify and concentrate on specific settings.

The remaining settings (typically 10% or less) can be specified as editable and made available to field engineers installing the devices. These are settings such as protection element pickup values and CT and VT ratios.

The settings template mode allows the user to define which settings are visible in the software. Settings templates can be applied to both settings files (settings file templates) and online devices (online settings templates). The functionality is identical for both purposes.

NOTE

Template mode is available in English only.

Settings file conversion from previous firmware versions is supported.

4.1.6.1 Enable the settings template

The settings file template feature is disabled by default. It can be enabled in offline or online mode.

The procedure outlines how to enable in offline mode the settings template for UR settings files.

1. Locate the settings file from the Offline Window area of the EnerVista UR Setup software. If not there, a file can be added from an online device by right-clicking it and selecting the **Add Device to Offline Window** option.
2. In the Offline Window area, right-click the selected device or settings file and select the **Template Mode > Create Template** option.

   The settings file template is now enabled and the file menus display in light blue. A message displays. The settings file is now in template editing mode. To undo the action, select **Template Mode > Remove Template**.

Alternatively, the settings template can be applied to online settings, as follows.

1. Locate the device in the Online Window area of the EnerVista UR Setup software.
2. Right-click the device and select the **Template Mode > Create Template** option. The software prompts for a template password. This password is required to use the template feature and must be at least four characters in length.

Figure 4-2: Entering a settings file password

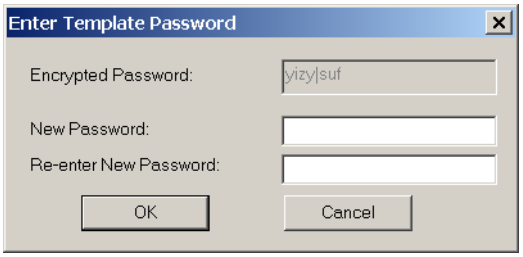

3. Enter and re-enter the new password, then click **OK** to continue.

   The online settings template is now enabled. The device is now in template editing mode.

4.1.6.2 Edit the settings template

The settings template editing feature allows the user to specify which settings are available for viewing and modification in EnerVista UR Setup. By default, all settings except the FlexLogic equation editor settings are locked.

1. With the template already enabled, locate the device or settings file in the Online or Offline Window area in the software.
2. Right-click the device or file and select the **Template Mode > Edit Template** option to place the device in template editing mode. If prompted, enter the template password then click **OK**.
3. Open the relevant settings window that contains settings to be specified as viewable.

   By default, all settings are specified as locked and displayed against a grey background. The icon on the upper right of the settings window also indicates that the EnerVista software is in **EDIT mode**. The following example shows the phase time overcurrent settings window in edit mode.

Figure 4-3: Settings template with all settings specified as locked

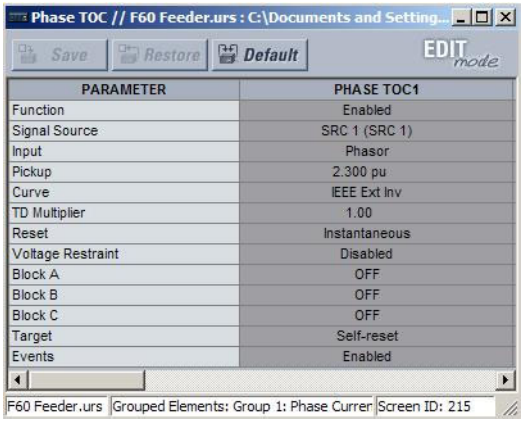

4. Specify the settings to make viewable by clicking them.

   A setting available to view is displayed against a yellow background.

Figure 4-4: Settings template with two settings specified as editable

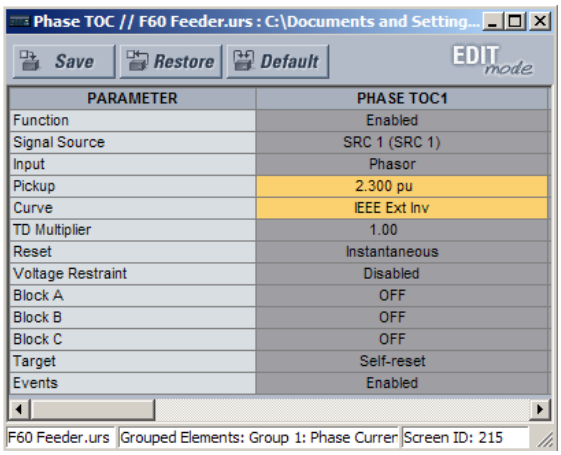

5. Click the **Save** button to save changes to the settings template.
6. Continue through any other settings window to specify all viewable settings.

   The next time that the device/settings are accessed, only those specified as viewable/editable display in the menu hierarchy.

4.1.6.3 Add password protection to a template

GE recommends that templates be saved with password protection to maximize security.

NOTE

When templates are created for online settings, the password is added during the initial template creation step. It does not need to be added after the template is created.

To add password protection to a settings file template:

1. In the Offline Window area, right-click the device and select the **Template Mode > Password Protect Template** option.

The software prompts for a template password. This password must be at least four characters in length.

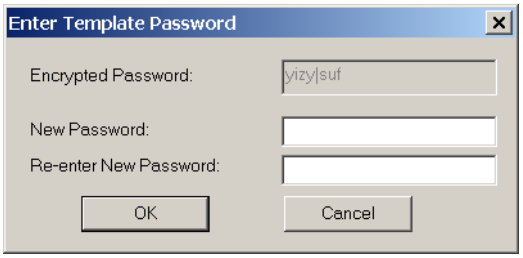

2. Enter and re-enter the new password, then click **OK** to continue.

The settings file template is now secured with password protection.

4.1.6.4 View the settings template

Once all necessary settings are specified for viewing, users are able to view the settings template on the online device or settings file. There are two ways to specify the settings view with the settings template feature:

- Display only those settings available for editing
- Display all settings, with settings not available for editing greyed-out

To display only the settings available for editing:

1. Right-click the device in the Online or Offline Window area and apply the template by selecting the **Template Mode > View In Template Mode** option.
2. Enter the template password then click **OK** to apply the template.

Once the template has been applied, users are limited to view and edit the settings specified by the template. The effect of applying the template to the phase time overcurrent settings is shown.

Figure 4-5: Applying templates using the View in Template Mode command

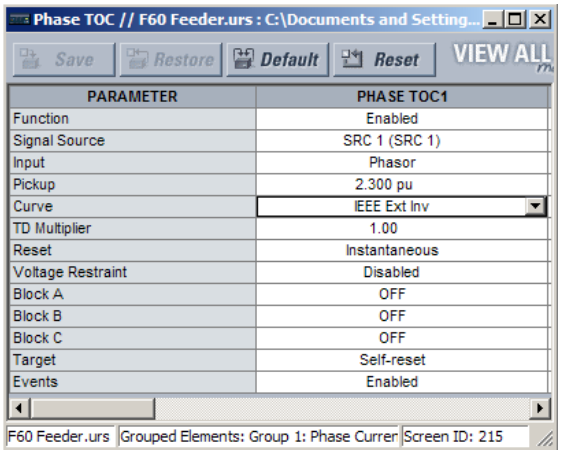

Phase time overcurrent settings window without template applied.

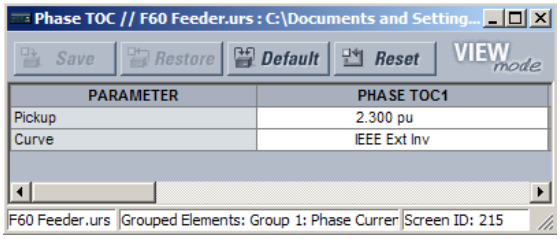

Phase time overcurrent window with template applied via the **Template Mode > View In Template Mode** command. The template specifies that only the Pickup and Curve settings be available.

842858A1.CDR

Viewing the settings in template mode also modifies the settings menu, showing only the settings categories that contain editable settings. The effect of applying the template to a typical settings menu is shown as follows.

Figure 4-6: Applying templates using the View in Template Mode settings command

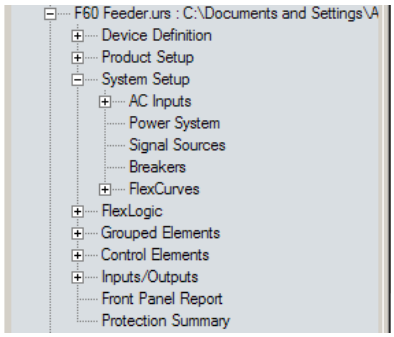

Typical settings tree view without template applied.

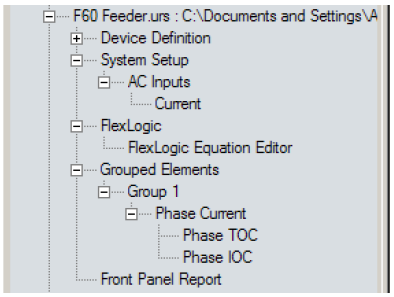

Typical settings tree view with template applied via the **Template Mode > View In Template Mode** command.

842860A1.CDR

Use the following procedure to display settings available for editing and settings locked by the template.

1. Right-click the device in the Online or Offline Window area and apply the template by selecting the **Template Mode > View All Settings** option.
2. Enter the template password then click **OK** to apply the template.

Once the template has been applied, users are limited to edit the settings specified by the template, but all settings are shown. The effect of applying the template to the phase time overcurrent settings is shown as follows.

Figure 4-7: Applying templates using the View All Settings command

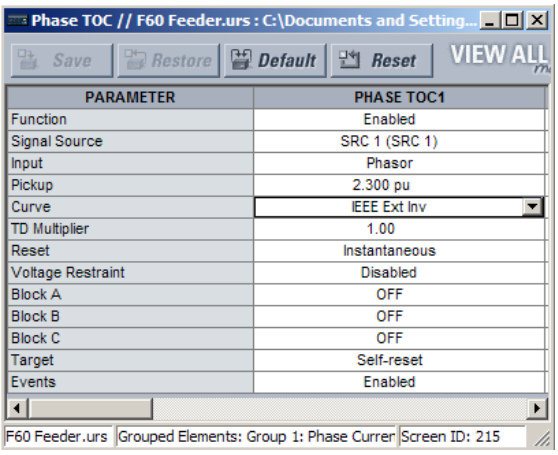

Phase time overcurrent settings window without template applied.

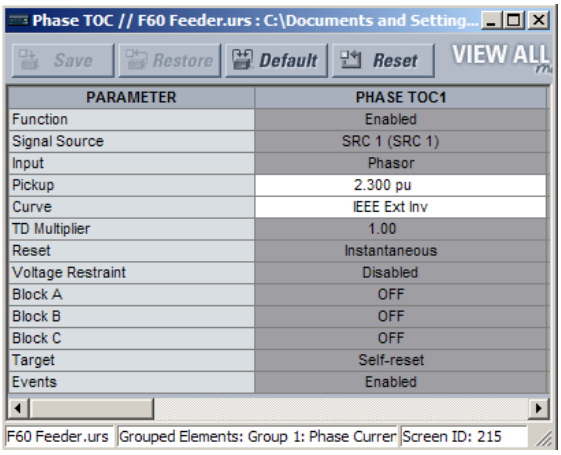

Phase time overcurrent window with template applied via the **Template Mode > View All Settings** command. The template specifies that only the Pickup and Curve settings be available.

842859A1.CDR

4.1.6.5 Remove the settings template

Once a settings template is removed, it cannot be reapplied and a new settings template needs to be defined before use.

1. Right-click the device in the Online or Offline Window area and select the **Template Mode > Remove Template** option.
2. Enter the template password and click **OK** to continue.

3. Confirm that you want to remove the template by clicking **Yes**.

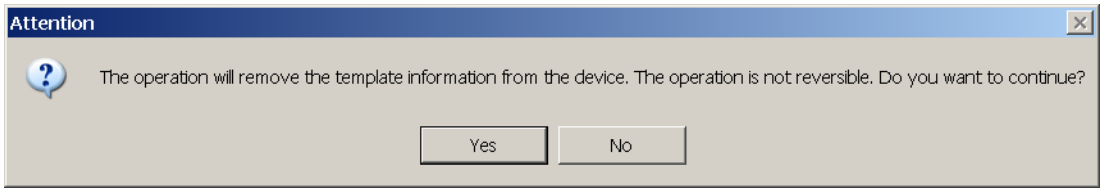

The EnerVista software removes all template information and all settings are available.

4.1.7 Secure and lock FlexLogic equations

The UR allows users to secure parts or all of a FlexLogic equation, preventing unauthorized viewing or modification of critical FlexLogic applications. This is accomplished using the settings template feature to lock individual entries within FlexLogic equations.

Secured FlexLogic equations remain secure when files are sent to and retrieved from any UR-series device.

Locking can be tied to the serial number too.

4.1.7.1 Lock FlexLogic equations

To lock individual entries of a FlexLogic equation:

1. Right-click the settings file or online device and select the **Template Mode > Create Template** item to enable the settings template feature.
2. If prompted, enter the template password.
3. Select the **FlexLogic > FlexLogic Equation Editor** settings menu item.

   By default, all FlexLogic entries are specified as viewable and displayed against a yellow background. The icon on the upper right of the window also indicates that EnerVista UR Setup is in **EDIT mode**.
4. Specify the entries to lock by clicking them.

   The locked entries display against a grey background as shown in the example.

Figure 4-8: Locking FlexLogic equation entries in Edit Mode

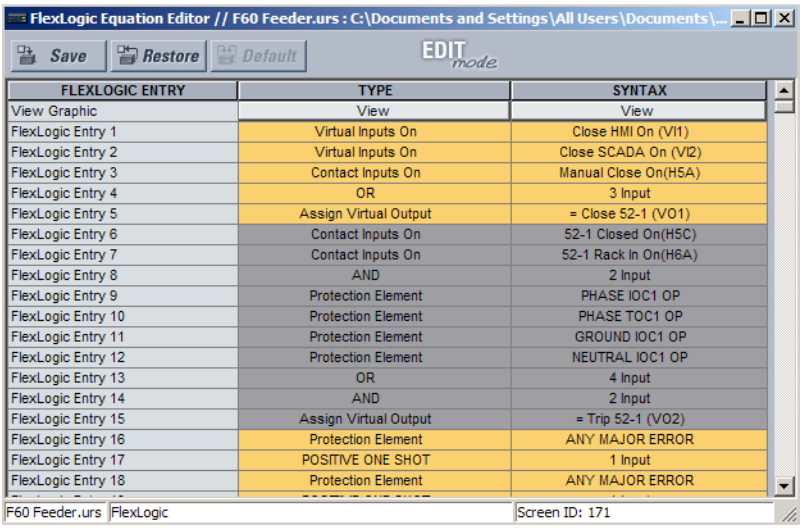

FLEXLOGIC ENTRY	TYPE	SYNTAX
View Graphic	View	View
FlexLogic Entry 1	Virtual Inputs On	Close HMI On (VI1)
FlexLogic Entry 2	Virtual Inputs On	Close SCADA On (VI2)
FlexLogic Entry 3	Contact Inputs On	Manual Close On(H5A)
FlexLogic Entry 4	OR	3 Input
FlexLogic Entry 5	Assign Virtual Output	= Close 52-1 (VO1)
FlexLogic Entry 6	Contact Inputs On	52-1 Closed On(H5C)
FlexLogic Entry 7	Contact Inputs On	52-1 Rack In On(H6A)
FlexLogic Entry 8	AND	2 Input
FlexLogic Entry 9	Protection Element	PHASE IOC1 OP
FlexLogic Entry 10	Protection Element	PHASE TOC1 OP
FlexLogic Entry 11	Protection Element	GROUND IOC1 OP
FlexLogic Entry 12	Protection Element	NEUTRAL IOC1 OP
FlexLogic Entry 13	OR	4 Input
FlexLogic Entry 14	AND	2 Input
FlexLogic Entry 15	Assign Virtual Output	= Trip 52-1 (VO2)
FlexLogic Entry 16	Protection Element	ANY MAJOR ERROR
FlexLogic Entry 17	POSITIVE ONE SHOT	1 Input
FlexLogic Entry 18	Protection Element	ANY MAJOR ERROR

5. Click the **Save** button to save and apply changes to the settings template.
6. Select the **Template Mode > View In Template Mode** option to view the template.
7. Optionally apply a password to the template by right-clicking the device and selecting the **Template Mode > Password Protect Template** option.

Once the template has been applied, users are limited to view and edit the FlexLogic entries not locked by the template. The effect of applying the template to the FlexLogic entries is shown here.

Figure 4-9: Locking FlexLogic entries through settings templates

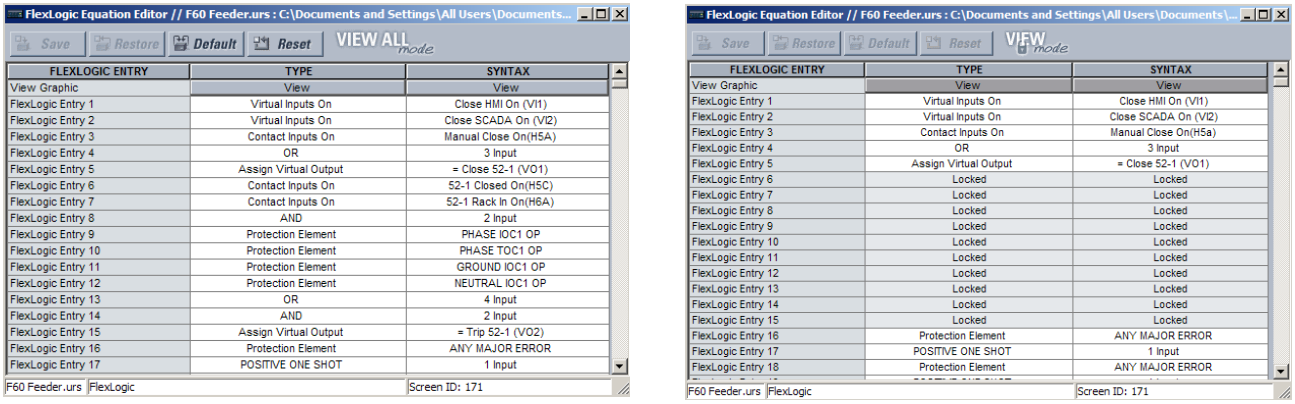

Typical FlexLogic™ entries without template applied.

Typical FlexLogic™ entries locked with template via the **Template Mode > View In Template Mode** command.

842861A1.CDR

The FlexLogic entries are also shown as locked in the graphical view and on the front panel display.

Figure 4-10: Secured FlexLogic in graphical view

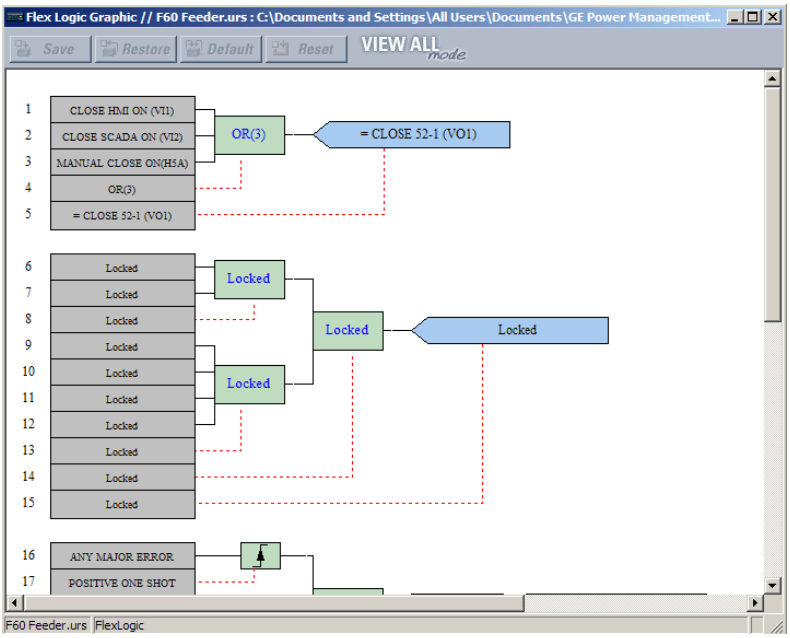

4.1.7.2 Lock FlexLogic equations to the serial number

A settings file and associated FlexLogic equations also can be locked to a UR serial number. Once FlexLogic entries in a settings file have been secured, use the following procedure to lock the settings file to a serial number. A serial number is viewable under **Actual Values > Product Info > Model Information**, the inside front panel, and the rear of the device.

1. Right-click the setting file in the Offline Window area and select the **Edit Settings File Properties** item. The window opens.

Figure 4-11: Settings file properties window

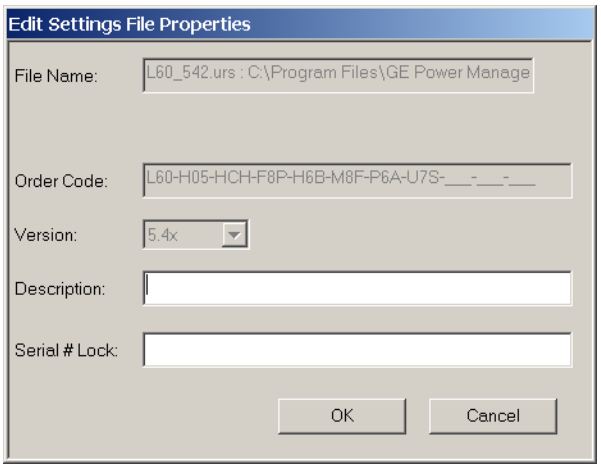

2. Enter the serial number of the F60 device to lock to the settings file in the **Serial # Lock** field.
3. Click the **OK** button to apply the change. The serial number is not validated.

The settings file and corresponding secure FlexLogic equations are now locked to the F60 device specified by the serial number.

4.1.8 Settings file traceability

A traceability feature for settings files allows the user to quickly determine if the settings in a F60 device have been changed since the time of installation from a settings file. When a settings file is transferred to a F60 device, the date, time, and serial number of the F60 are sent back to EnerVista UR Setup and added to the settings file on the local computer. This information can be compared with the F60 actual values at any later date to determine if security has been compromised.

The traceability information is only included in the settings file if a complete settings file is either transferred to the F60 device or obtained from the F60 device. Any partial settings transfers by way of drag and drop do not add the traceability information to the settings file.

Figure 4-12: Settings file traceability

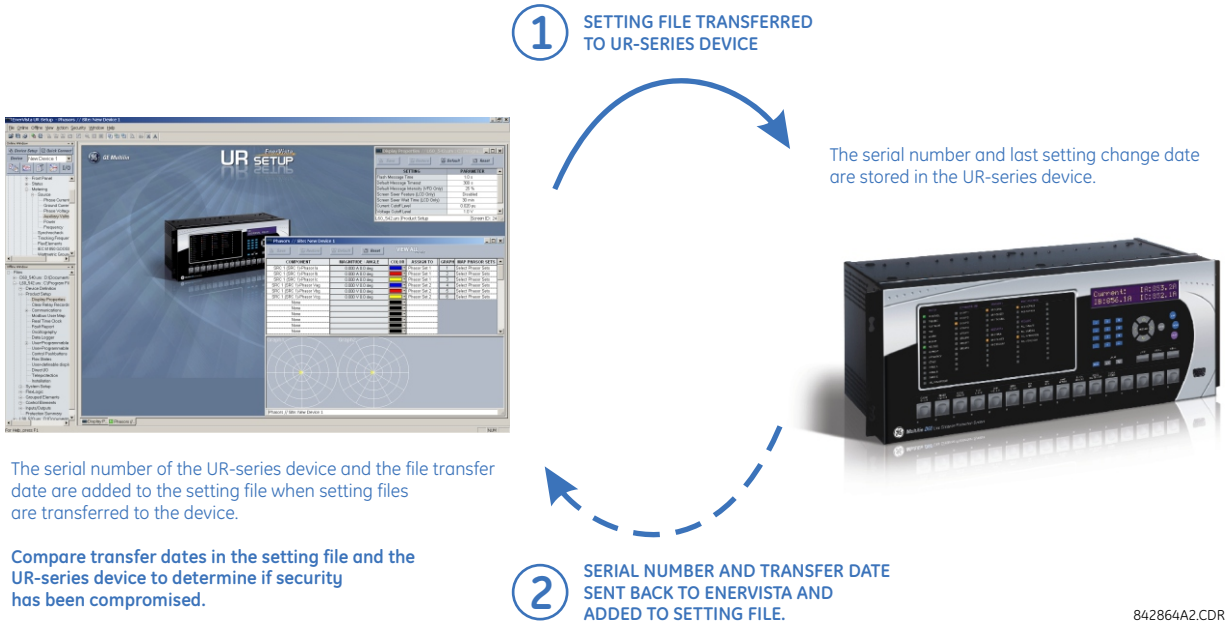

With respect to the figure, the traceability feature is used as follows.

1. The transfer date of a settings file written to a F60 is logged in the relay and can be viewed in the EnerVista software or the front panel display. Likewise, the transfer date of a settings file saved to a local computer is logged in the EnerVista software.
2. Comparing the dates stored in the relay and on the settings file at any time in the future indicates if any changes have been made to the relay configuration since the settings file was saved.

4.1.8.1 Settings file traceability information

The serial number and file transfer date are saved in the settings files when they are sent to a F60 device.

The F60 serial number and file transfer date are included in the settings file device definition within the EnerVista UR Setup offline window as shown in the example.

Figure 4-13: Device definition showing traceability data

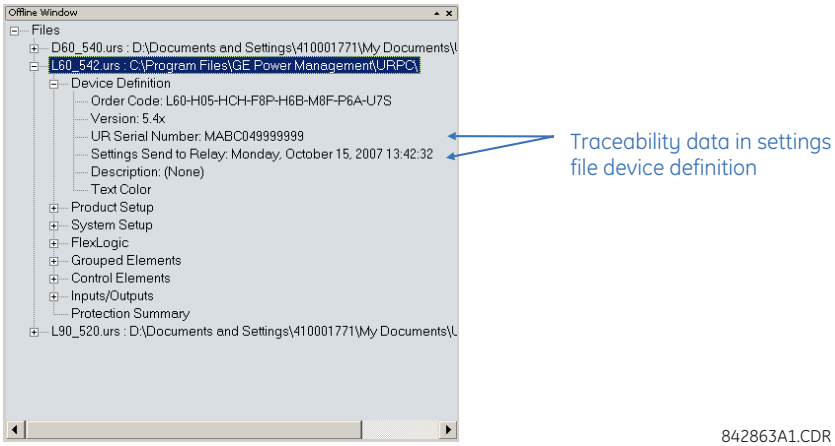

This information is also available in printed settings file reports as shown in the example. A report is generated by right-clicking and selecting the **Print Settings** option.

Figure 4-14: Settings file report showing traceability data

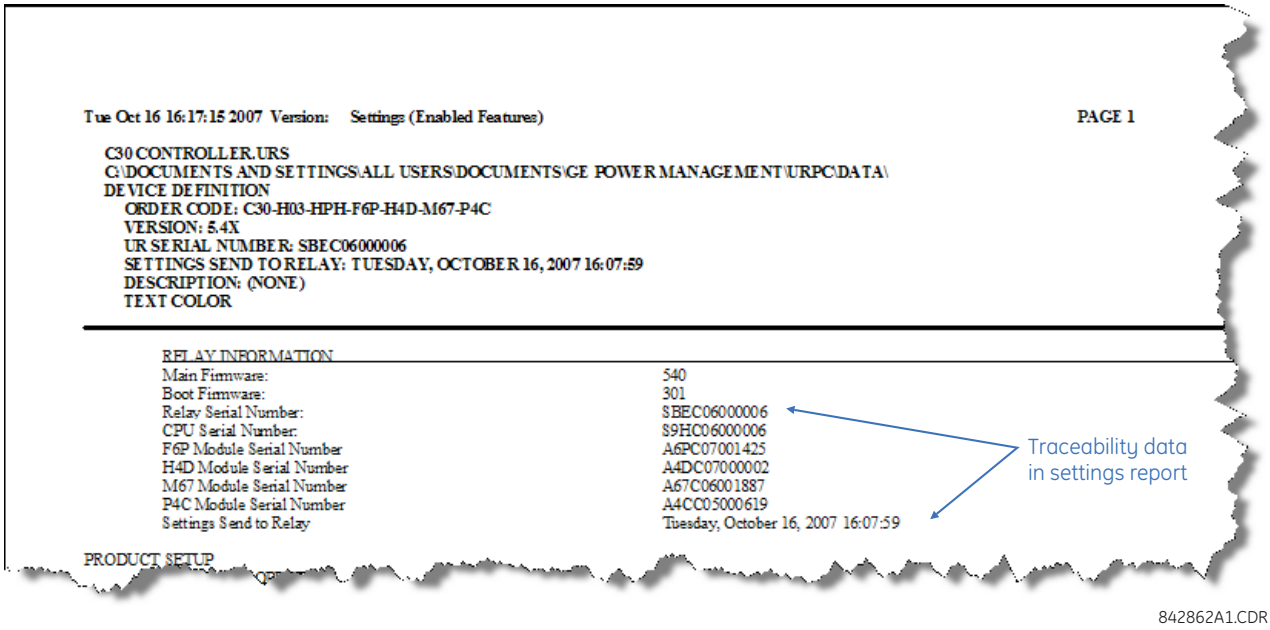

4.1.8.2 Online device traceability information

The F60 serial number and file transfer date are available for an online device through the actual values. Select the **Actual Values > Product Info > Model Information** menu item within the EnerVista online window as shown in the example.

Figure 4-15: Traceability data in Actual Values window

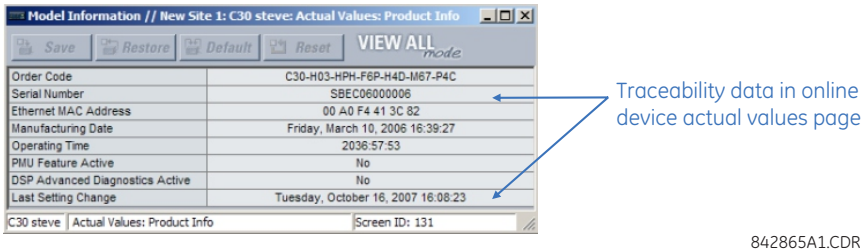

This information is also available from the front panel display through the following actual values:

ACTUAL VALUES ⇨⇩ PRODUCT INFO ⇨ MODEL INFORMATION ⇨⇩ SERIAL NUMBER

ACTUAL VALUES ⇨⇩ PRODUCT INFO ⇨ MODEL INFORMATION ⇨⇩ LAST SETTING CHANGE

4.1.8.3 Additional traceability rules

The following additional rules apply for the traceability feature:

- If the user changes any settings within the settings file in the offline window, then the traceability information is removed from the settings file
- If the user creates a new settings file, then no traceability information is included in the settings file
- If the user converts an existing settings file to another revision, then any existing traceability information is removed from the settings file
- If the user duplicates an existing settings file, then any traceability information is transferred to the duplicate settings file

4.2 Front panel interface

This section explains use of the front panel.

4.2.1 Front panel display

Messages display on a backlit liquid crystal display (LCD) to make them visible under poor lighting conditions. When the keypad and display are not actively being used, the display defaults to user-defined messages. Any high-priority event-driven message overrides the default messages and displays.

Settings files conversion from previous firmware versions is supported.

4.2.2 Front panel keypad

Display messages are organized into pages under the following headings: actual values, settings, commands, and targets. The **MENU** key navigates through these pages. Each heading page is divided further into further submenus.

The **MESSAGE** keys navigate through the submenus. The **VALUE** keys increment or decrement numerical setting values when in programming mode. These keys also scroll through alphanumeric values in the text edit mode. Alternatively, values can be entered with the numeric keypad.

The decimal key initiates and advances to the next character in text edit mode or enters a decimal point.

The **HELP** key can be pressed at any time for context-sensitive help messages.

The **ENTER** key stores setting values.

When entering an IP address on the front panel, key in the first sequence of the number, then press the • key for the decimal place. For example, for 127.0.0.1, press 127, then •, then 0, then •, then 0, then •, then 1. To save the address, press the **ENTER** key.

The figure shows the sequence to use to enter a setting. Subsequent sections provide more detail.

Figure 4-16: Front panel keypad use

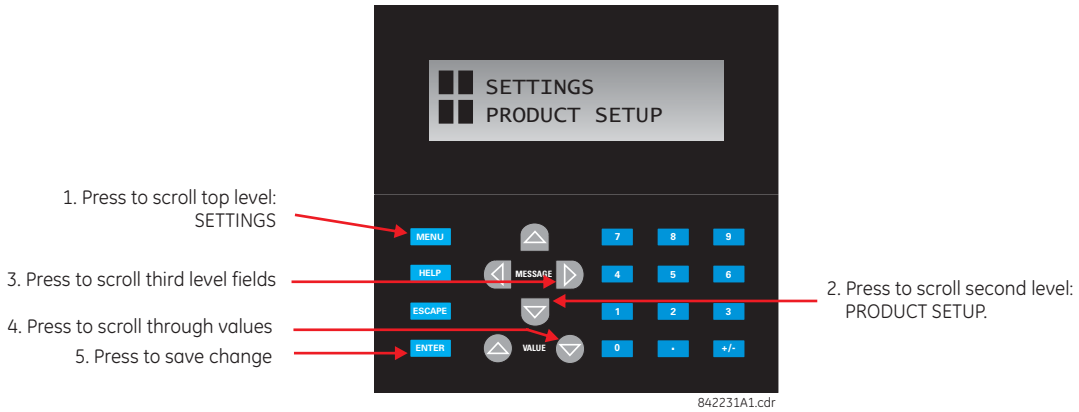

4.2.3 Menu navigation

Press the **MENU** key to select a header display page (top-level menu). The header title appears momentarily followed by a header display page menu item. Each press of the **MENU** key advances through the following main headings:

- Actual Values
- Settings
- Commands
- Targets
- Factory Service
- User displays (when enabled)

4.2.4 Menu hierarchy

The setting and actual value messages are arranged hierarchically. The header display pages are indicated by double scroll bars (■■), while sub-header pages are indicated by single scroll bar (■). The header display pages represent the highest level of the hierarchy and the sub-header display pages fall below this level. The **MESSAGE** up and down arrow keys move within a group of headers, sub-headers, setting values, or actual values. Continually pressing the **MESSAGE** right arrow from a header display displays specific information for the category. Conversely, continually pressing the **MESSAGE** left arrow from a setting value or actual value display returns to the header display.

Default values are indicated in this instruction manual in mixed case. In the example shown here, the default access level is Restricted.

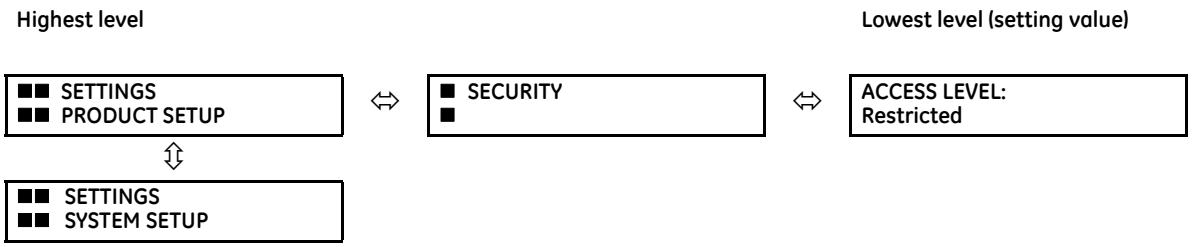

4.2.4.1 Example

■■ ACTUAL VALUES ■■ STATUS	Press the **MENU** key until the header for the first Actual Values page appears. This page contains system and relay status information. Repeatedly press the **MESSAGE** keys to display the other actual value headers.
⇩	
■■ SETTINGS ■■ PRODUCT SETUP	Press the **MENU** key until the header for the first page of Settings appears. This page contains settings to configure the relay.
⇩	
■■ SETTINGS ■■ SYSTEM SETUP	Press the **MESSAGE** down arrow to move to the next Settings page. This page contains settings for System Setup. Repeatedly press the **MESSAGE** up and down arrows to display the other setting headers and then back to the first Settings page header.
⇩	
■ SECURITY ■	From the Settings page one header (Product Setup), press the **MESSAGE** right arrow once to display the first sub-header (Security).
⇩	
ACCESS LEVEL: Restricted	Press the **MESSAGE** right arrow once more and this displays the first setting for Security. Pressing the **MESSAGE** down arrow repeatedly displays the remaining setting messages for the Security sub-header.
⇩	
■ SECURITY ■	Press the **MESSAGE** left arrow once to move back to the first sub-header message.
⇩	
■ DISPLAY ■ PROPERTIES	Pressing the **MESSAGE** down arrow displays the second setting sub-header associated with the Product Setup header.
⇩	
FLASH MESSAGE TIME: 10.0 s	Press the **MESSAGE** right arrow once more to display the first setting for Display Properties.

4.2.5 Changing settings

4.2.5.1 Entering numerical data

Each numerical setting has its own minimum, maximum, and increment value associated with it. These parameters define what values are acceptable for a setting.

FLASH MESSAGE TIME: 10.0 s	For example, select the **SETTINGS** ⇨ **PRODUCT SETUP** ⇨⇩ **DISPLAY PROPERTIES** ⇨ **FLASH MESSAGE TIME** setting.
⇩	
MINIMUM: 0.5 MAXIMUM: 10.0	Press the **HELP** key to view the minimum and maximum values. Press the key again to view the next context sensitive help message.

Two methods of editing and storing a numerical setting value are available.

- **0 to 9 and decimal point** — The relay numeric keypad works the same as a calculator. A number is entered one digit at a time. The leftmost digit is entered first and the rightmost digit is entered last. Pressing the **MESSAGE** left arrow or pressing the **ESCAPE** key, returns the original value to the display.
- **VALUE keys** — The **VALUE** up arrow increments the displayed value by the step value, up to the maximum value allowed. While at the maximum value, pressing the **VALUE** up arrow again allows the setting selection to continue upward from the minimum value. The **VALUE** down arrow decrements the displayed value by the step value, down to

the minimum value. While at the minimum value, pressing the **VALUE** down arrow again allows the setting selection to continue downward from the maximum value.

FLASH MESSAGE TIME: 2.5 s	As an example, set the flash message time setting to 2.5 seconds. Press the appropriate numeric keys in the sequence "2 . 5". The display message changes as the digits are being entered.
⇩	
NEW SETTING HAS BEEN STORED	Until **ENTER** is pressed, editing changes are not registered by the relay. Press **ENTER** to store the new value in memory. This flash message momentarily appears as confirmation of the storing process. Numerical values that contain decimal places are rounded-off if more decimal place digits are entered than specified by the step value.

4.2.5.2 Entering enumeration data

Enumeration settings have data values that are part of a set, whose members are explicitly defined by a name. A set has two or more members.

ACCESS LEVEL: Restricted	For example, the selections available for **ACCESS LEVEL** are "Restricted," "Command," "Setting," and "Factory Service."

Enumeration type values are changed using the **VALUE** keys. The **VALUE** up arrow displays the next selection while the **VALUE** down arrow displays the previous selection.

ACCESS LEVEL: Setting	If the **ACCESS LEVEL** needs to be "Setting," press the **VALUE** keys until the proper selection displays. Press **HELP** at any time for the context sensitive help messages.
⇩	
NEW SETTING HAS BEEN STORED	Changes are not registered by the relay until the **ENTER** key is pressed. Pressing **ENTER** stores the new value in memory. This flash message momentarily appears as confirmation.

4.2.5.3 Entering alphanumeric text

Text settings have data values that are fixed in length, but user-defined in characters. They can be upper-case letters, lower-case letters, numerals, and a selection of special characters.

There are several places where text messages can be programmed to allow the relay to be customized for specific applications. One example is the Message Scratchpad. Use the following procedure to enter alphanumeric text messages.

For example, enter the text "Breaker #1".

1. Press the decimal point to enter text edit mode.
2. Press the **VALUE** keys until the character 'B' appears; press the decimal key to advance the cursor to the next position.
3. Repeat step 2 for the remaining characters: r,e,a,k,e,r, ,#,1.
4. Press **ENTER** to store the text.
5. If you have any problem, press **HELP** to view context sensitive help. Flash messages appear sequentially for several seconds each. For the case of a text setting message, pressing **HELP** displays how to edit and store new values.

4.2.6 Faceplate

4.2.6.1 Enhanced faceplate

The front panel consists of LED panels, an RS232 port, keypad, LCD display, control pushbuttons, and optional user-programmable pushbuttons.

The faceplate is hinged to allow access to the removable modules.

Figure 4-17: Enhanced faceplate

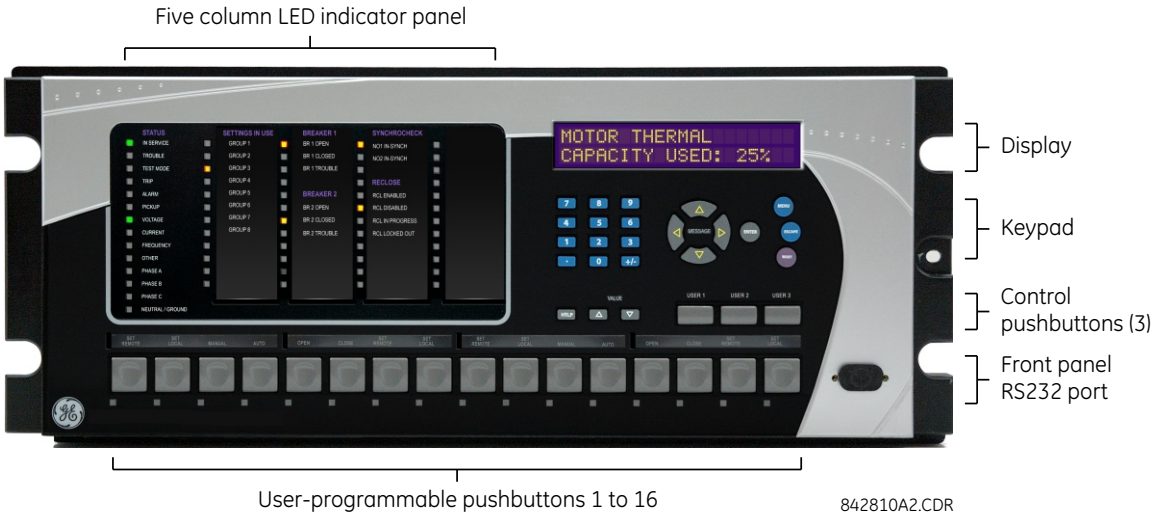

4.2.6.2 Basic faceplate

The front panel consists of LED panels, an RS232 port, keypad, LCD display, control pushbuttons, and optional user-programmable pushbuttons.

The faceplate is hinged to allow easy access to the removable modules. There is also a removable dust cover that fits over the faceplate that must be removed in order to access the keypad panel. The following figure shows the horizontal arrangement of the faceplate panel.

Figure 4-18: Standard horizontal faceplate

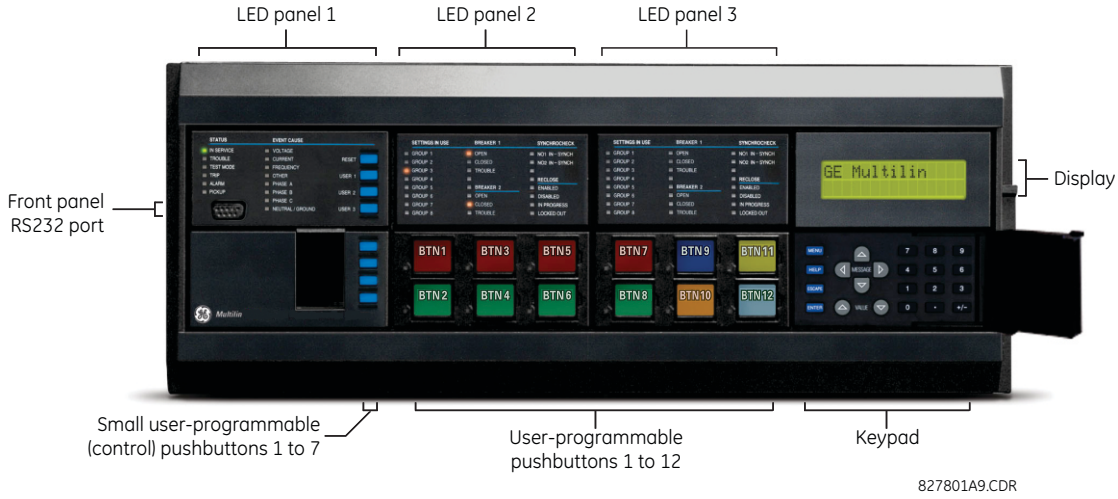

The following figure shows the vertical arrangement of the faceplate panel for relays ordered with the vertical option.

Figure 4-19: Standard vertical faceplate

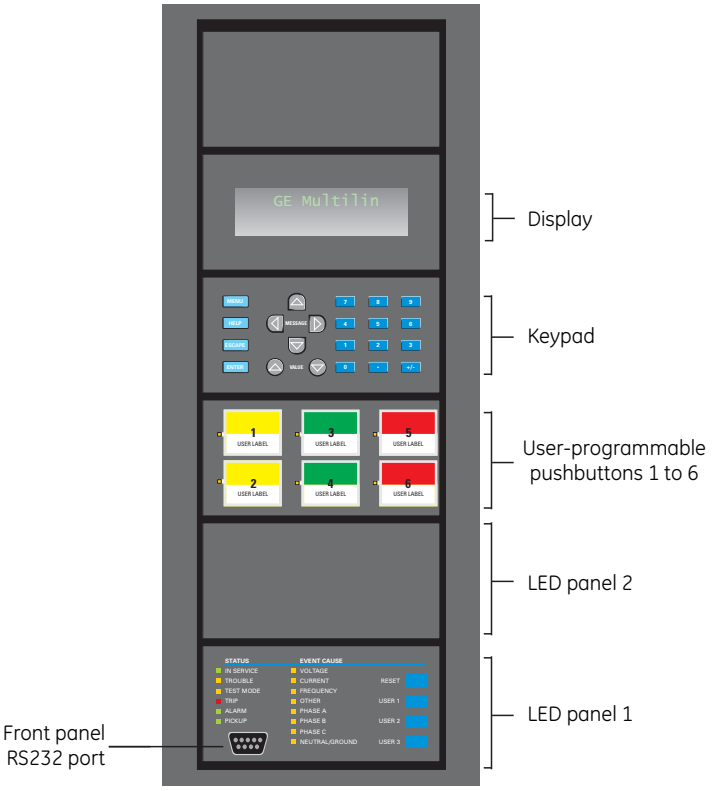

4.2.7 LED indicators

4.2.7.1 Enhanced faceplate

The enhanced front panel display provides five columns of LED indicators. The first column contains 14 status and event-cause LEDs. The next four columns contain the 48 user-programmable LEDs.

The **RESET** key is used to reset any latched LED indicator or target message, once the condition has been cleared (these latched conditions can also be reset via the **SETTINGS** ⇨⇩ **INPUT/OUTPUTS** ⇨⇩ **RESETTING** menu).

The **USER** keys are used by the breaker control feature.

Figure 4-20: Typical LED panel for enhanced faceplate

The status indicators in the first column are as follows:

- **IN SERVICE** — This LED indicates that control power is applied, all monitored inputs, outputs, and internal systems are OK, and that the device has been programmed
- **TROUBLE** — This LED indicates that the relay has detected an internal problem
- **TEST MODE** — This LED indicates that the relay is in test mode. For more information, see the Test Mode section in the Settings chapter.
- **TRIP** — This LED indicates that the FlexLogic operand serving as a trip switch has operated. This indicator always latches; as such, a reset command must be initiated to allow the latch to reset.
- **ALARM** — This LED indicates that the FlexLogic operand serving as an alarm switch has operated. This indicator is never latched.
- **PICKUP** — This LED indicates that an element is picked up. This indicator is never latched.

The event-cause indicators in the first column are as follows.

Event-cause LEDs are turned on or off by protection elements that have their respective target setting selected as either "Enabled" or "Latched." If a protection element target setting is "Enabled," then the corresponding event-cause LEDs remain on as long as the operate operand associated with the element remains asserted. If a protection element target setting is "Latched," then the corresponding event-cause LEDs turn on when the operate operand associated with the element is asserted and remain on until the **RESET** button on the front panel is pressed after the operand is reset.

All elements that are able to discriminate faulted phases can independently turn off or on the phase A, B, or C LEDs. This includes phase instantaneous overcurrent, phase undervoltage, and so on. This means that the phase A, B, and C operate operands for individual protection elements are ORed to turn on or off the phase A, B, or C LEDs.

- **VOLTAGE** — This LED indicates voltage was involved
- **CURRENT** — This LED indicates current was involved
- **FREQUENCY** — This LED indicates frequency was involved
- **OTHER** — This LED indicates a composite function that is not solely current, voltage, or frequency based (distance or power for example) or a control function (digital element or trip bus for example)
- **PHASE A** — This LED indicates phase A was involved
- **PHASE B** — This LED indicates phase B was involved
- **PHASE C** — This LED indicates phase C was involved
- **NEUTRAL/GROUND** — This LED indicates that neutral or ground was involved

The user-programmable LEDs consist of 48 amber LED indicators in four columns. The operation of these LEDs is user-defined. Support for applying a customized label beside every LED is provided. Default labels are shipped in the label package of every F60, together with custom templates. The default labels can be replaced by user-printed labels.

User customization of LED operation is of maximum benefit in installations where languages other than English are used to communicate with operators. See the User-Programmable LEDs section in chapter 5 for the settings used to program the operation of the LEDs on these panels.

4.2.7.2 Basic faceplate

The basic faceplate consists of three panels with LED indicators, keys, and a communications port. The **RESET** key is used to reset any latched LED indicator or target message, once the condition has been cleared (these latched conditions can also be reset via the **SETTINGS** ⇨⇩ **INPUT/OUTPUTS** ⇨⇩ **RESETTING** menu). The RS232 port is for connection to a computer.

The **USER** keys are used by the breaker control feature.

Figure 4-21: LED panel 1

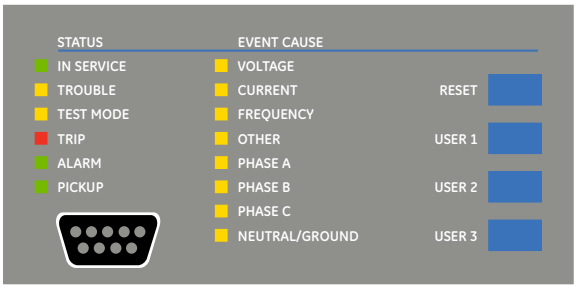

Status indicators

- **IN SERVICE** — Indicates that control power is applied, all monitored inputs/outputs and internal systems are fine, the relay has been programmed
- **TROUBLE** — Indicates that the relay has detected an internal problem
- **TEST MODE** — Indicates that the relay is in test mode. For more information, see the Test Mode section in the Settings chapter.
- **TRIP** — Indicates that the selected FlexLogic operand serving as a Trip switch has operated. This indicator always latches; the reset command must be initiated to allow the latch to be reset.
- **ALARM** — Indicates that the selected FlexLogic operand serving as an Alarm switch has operated. This indicator is never latched.
- **PICKUP** — Indicates that an element is picked up. This indicator is never latched.

Event-cause indicators

Event-cause LEDs are turned on or off by protection elements that have their respective target setting selected as either "Enabled" or "Latched." If a protection element target setting is "Enabled," then the corresponding event cause LEDs remain on as long as operate the operand associated with the element remains asserted. If a protection element target setting is "Latched," then the corresponding event cause LEDs turn on when the operate operand associated with the element is asserted and remain on until the **RESET** button on the front panel is pressed after the operand is reset.

All elements that are able to discriminate faulted phases can independently turn off or on the phase A, B, or C LEDs. This includes phase instantaneous overcurrent, phase undervoltage, and so on. This means that the phase A, B, and C operate operands for individual protection elements are ORed to turn on or off the phase A, B, or C LEDs.

- **VOLTAGE** — Indicates voltage was involved
- **CURRENT** — Indicates current was involved
- **FREQUENCY** — Indicates frequency was involved
- **OTHER** — Indicates a composite function that is not solely current, voltage, or frequency based (distance or power for example) or a control function (digital element or trip bus for example)
- **PHASE A** — Indicates phase A was involved
- **PHASE B** — Indicates phase B was involved
- **PHASE C** — Indicates phase C was involved
- **NEUTRAL/GROUND** — Indicates that neutral or ground was involved

User-programmable indicators

The second and third panels provide 48 amber LED indicators whose operation is controlled by the user. Support for applying a customized label beside every LED is provided.

User customization of LED operation is of maximum benefit in installations where languages other than English are used to communicate with operators. See the User-programmable LEDs section in chapter 5 for the settings used to program the operation of the LEDs on these panels.

Figure 4-22: LED panels 2 and 3 (index template)

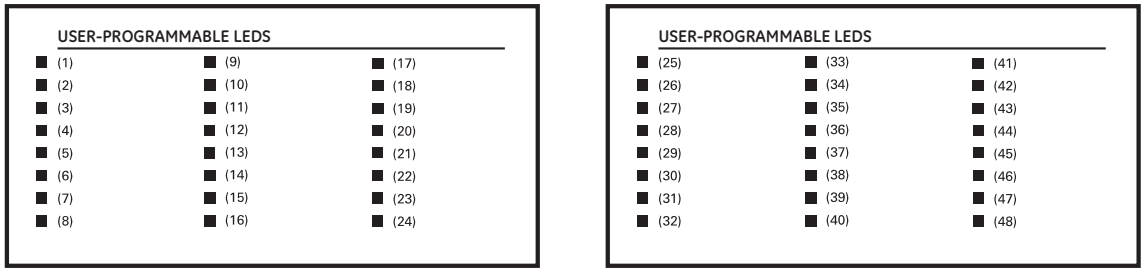

842782A1.CDR

Default labels for LED panel 2

The default labels are intended to represent the following:

- **GROUP 1...6** — The illuminated GROUP is the active settings group
- **BREAKER 1(2) OPEN** — The breaker is open
- **BREAKER 1(2) CLOSED** — The breaker is closed
- **BREAKER 1(2) TROUBLE** — A problem related to the breaker has been detected
- **SYNCHROCHECK NO1(4) IN-SYNCH** — Voltages have satisfied the synchrocheck element
- **RECLOSE ENABLED** — The recloser is operational
- **RECLOSE DISABLED** — The recloser is not operational
- **RECLOSE IN PROGRESS** — A reclose operation is in progress
- **RECLOSE LOCKED OUT** — The recloser is not operational and requires a reset

NOTE

Firmware revisions 2.9x and earlier support eight user setting groups; revisions 3.0x and higher support six setting groups. For convenience of users using earlier firmware revisions, the relay panel shows eight setting groups. Even though the LEDs have default labels, they are fully user-programmable.

The relay is shipped with the default label for the LED panel 2. The LEDs, however, are not pre-programmed. To match the pre-printed label, the LED settings must be entered as shown in the User-programmable LEDs section of chapter 5. The LEDs are fully user-programmable. The default labels can be replaced by user-printed labels for both panels as explained in the next section.

Figure 4-23: LED panel 2 (default labels)

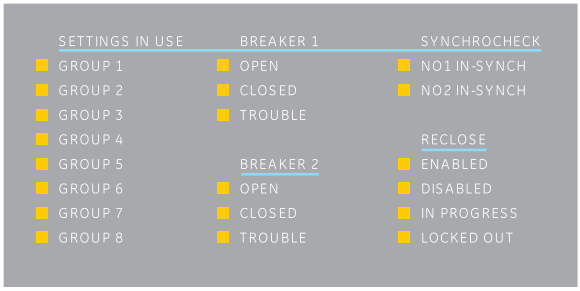

842784A1.CDR

4.2.8 Custom LED labeling

4.2.8.1 Enhanced faceplate

The following procedure requires these pre-requisites:

- EnerVista UR Setup software is installed and operational

- The F60 settings have been saved to a settings file
- The UR front panel label cutout sheet (GE part number 1006-0047) has been downloaded from http://www.gegridsolutions.com/products/support/ur/URLEDenhanced.doc and printed
- Small-bladed knife

To create custom LED labels for the enhanced front panel display:

1. Start the EnerVista UR Setup software.
2. Select the **Front Panel Report** item at the bottom of the navigation menu for the settings file. The front panel report window displays.

Figure 4-24: Front panel report window

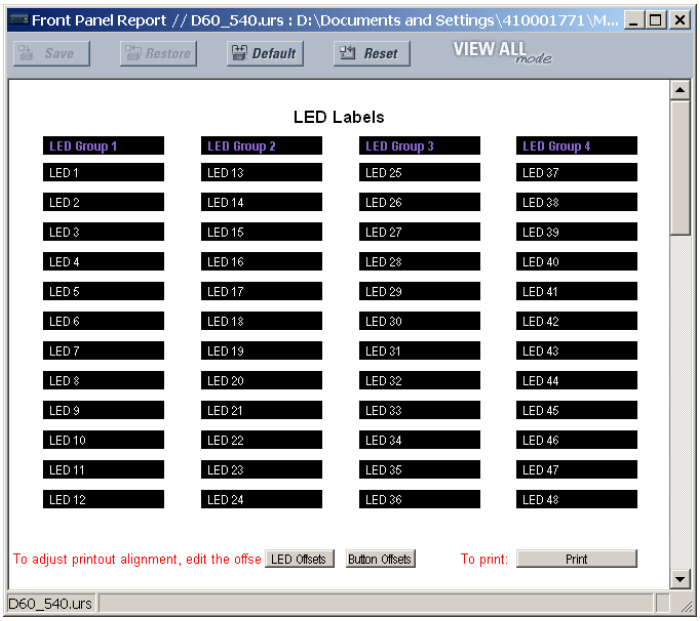

3. Enter the text to appear next to each LED and above each user-programmable pushbutton in the fields provided.
4. Feed the UR front panel label cutout sheet into a printer and press the **Print** button in the front panel report window.
5. When printing is complete, fold the sheet along the perforated lines and punch out the labels.
6. Remove the UR label insert tool from the package and bend the tabs as described in the following procedures. These tabs are used for removal of the default and custom LED labels.

NOTE

Use the tool EXACTLY as outlined as follows, with the printed side containing the GE part number facing the user.

The label package shipped with every F60 contains the three default labels, the custom label template sheet, and the label removal tool.

If the default labels are suitable for your application, insert them in the appropriate slots and program the LEDs to match them. If you require custom labels, use the following procedures to remove the original labels and insert the new ones.

To set up and use the label removal tool:

1. Bend the tabs at the left end of the tool upwards as shown.

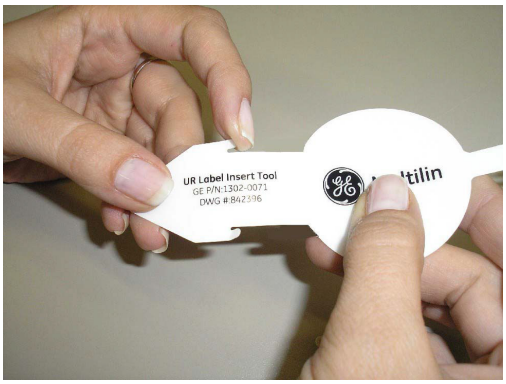

Bend the tab at the center of the tool tail as shown.

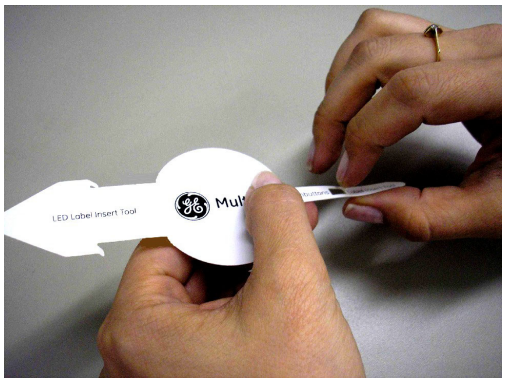

To remove the LED labels from the F60 enhanced front panel and insert the custom labels:

1. Use the knife to lift the LED label and slide the label tool underneath. Ensure that the bent tabs are pointing away from the relay.

2. Slide the label tool under the LED label until the tabs snap out as shown. This attaches the label tool to the LED label.

3. Remove the tool and attached LED label as shown.

4. Slide the new LED label inside the pocket until the text is properly aligned with the LEDs, as shown.

To remove the user-programmable pushbutton labels from the F60 enhanced front panel and insert the custom labels:

1. Use the knife to lift the pushbutton label and slide the tail of the label tool underneath, as shown. Ensure that the bent

tab points away from the relay.

2. Slide the label tool under the user-programmable pushbutton label until the tabs snap out as shown. This attaches the label tool to the user-programmable pushbutton label.

3. Remove the tool and attached user-programmable pushbutton label.

4. Slide the new user-programmable pushbutton label inside the pocket until the text is properly aligned with the

buttons.

4.2.9 Breaker control

The F60 can interface with associated circuit breakers. In many cases the application monitors the state of the breaker, that can be presented on faceplate LEDs, along with a breaker trouble indication. Breaker operations can be manually initiated from the faceplate keypad or automatically initiated from a FlexLogic operand. A setting is provided to assign names to each breaker; this user-assigned name is for the display of related flash messages. These features are provided for two breakers; the user can use only those portions of the design relevant to a single breaker, which must be breaker 1.

It is assumed in the following discussion that the **SETTINGS** ⇨⇩ **SYSTEM SETUP** ⇨⇩ **BREAKERS** ⇨ **BREAKER 1(2)** ⇨ **BREAKER FUNCTION** setting is "Enabled" for each breaker.

4.2.9.1 Control mode selection and monitoring

Installations can require that a breaker be operated in the three-pole only mode (3-pole), or in the one and three-pole (1-pole) mode, selected by setting. If the mode is selected as three-pole, a single input tracks the breaker open or closed position. If the mode is selected as one-pole, all three breaker pole states must be input to the relay. These inputs must be in agreement to indicate the position of the breaker.

For the following discussion it is assumed that the **SETTINGS** ⇨⇩ **SYSTEM SETUP** ⇨⇩ **BREAKERS** ⇨ **BREAKER 1(2)** ⇨⇩ **BREAKER 1(2) PUSH BUTTON CONTROL** setting is “Enabled” for each breaker.

4.2.9.2 Faceplate (user key) control

After the 30 minute interval during which command functions are permitted after a correct command password, the user cannot open or close a breaker via the keypad. The following discussions begin from the not-permitted state.

4.2.9.3 Control of two breakers

For the following setup example, the **(Name)** field represents the user-programmed variable name.

For this example, the relay is connected and programmed for both breaker 1 and breaker 2. The **USER 1** key performs the selection of which breaker is to be operated by the **USER 2** and **USER 3** keys. The **USER 2** key manually closes the breaker, and the **USER 3** key manually opens the breaker.

ENTER COMMAND PASSWORD	This message appears when the **USER 1**, **USER 2**, or **USER** 3 key is pressed and a **COMMAND PASSWORD** is required, that is, if **COMMAND PASSWORD** is enabled and no commands have been issued within the last 30 minutes.
Press USER 1 To Select Breaker	This message appears if the correct password is entered or if none is required. This message displays for 30 seconds or until the **USER 1** key is pressed again.
BKR1-(Name) SELECTED USER 2=CLS/USER 3=OP	This message displays after the **USER 1** key is pressed for the second time. Three possible actions can be performed from this state within 30 seconds as per the following items (1), (2) and (3).
(1)	
USER 2 OFF/ON To Close BKR1-(Name)	If the **USER 2** key is pressed, this message appears for 20 seconds. If the **USER 2** key is pressed again within that time, a signal is created that can be programmed to operate an output relay to close breaker 1.
(2)	
USER 3 OFF/ON To Open BKR1-(Name)	If the **USER 3** key is pressed, this message appears for 20 seconds. If the **USER 3** key is pressed again within that time, a signal is created that can be programmed to operate an output relay to open breaker 1.
(3)	
BKR2-(Name) SELECTED USER 2=CLS/USER 3=OP	If the **USER 1** key is pressed at this step, this message appears showing that a different breaker is selected. Three possible actions can be performed from this state as per (1), (2) and (3). Repeatedly pressing the **USER 1** key alternates between available breakers. Pressing keys other than **USER 1**, **2**, or **3** at any time cancels the breaker control function.

4.2.9.4 Control of one breaker

For this application, the relay is connected and programmed for breaker 1 only. Operation for this application is identical to that described in the previous section for two breakers.

4.2.10 Change passwords

The information in this section refers to password security. For information on how to set the password for the first time or change CyberSentry passwords, see the previous chapter or the Settings > Product Setup > Security > CyberSentry section in the next chapter.

The F60 supports password entry from a local or remote connection.

Local access is defined as access to settings or commands via the faceplate. This includes both keypad entry and the RS232 port. Remote access is defined as access to settings or commands via any rear communications port. This includes both Ethernet and RS485 connections. Any change to the local or remote password enables this functionality.

When entering a settings or command password via EnerVista or any serial interface, the user must enter the corresponding connection password. If the connection is to the back of the F60, the remote password must be used. If the connection is to the RS232 port of the faceplate, the local password must be used.

There are two user security access levels, setting and command, for which you can set a password for each. Use of a password for each level controls whether users can enter commands or change settings. Another option is to specify setting and/or command access for individual user accounts.

- **Setting** — Allows the user to make any changes to any of the setting values:
  - Changing any setting
  - Test mode operation
- **Command** — Restricts the user from making any settings changes, but allows the user to perform the following operations:
  - Operating the breakers via faceplate keypad
  - Changing the state of virtual inputs

- Clearing the event records
- Clearing the oscillography records
- Clearing fault reports
- Changing the date and time
- Clearing the breaker arcing current
- Clearing energy records
- Clearing the data logger
- Clearing the user-programmable pushbutton states

To enter the initial setting or command password:

1. Press the **MENU** key until the **SETTINGS** header flashes momentarily and the **PRODUCT SETUP** message appears on the display.
2. Press the **MESSAGE** right arrow until the **ACCESS LEVEL** message appears on the display.
3. Press the **MESSAGE** down arrow until the **CHANGE LOCAL PASSWORDS** message appears on the display.
4. Press the **MESSAGE** right arrow until the **CHANGE SETTING PASSWORD** or **CHANGE COMMAND PASSWORD** message appears on the display.

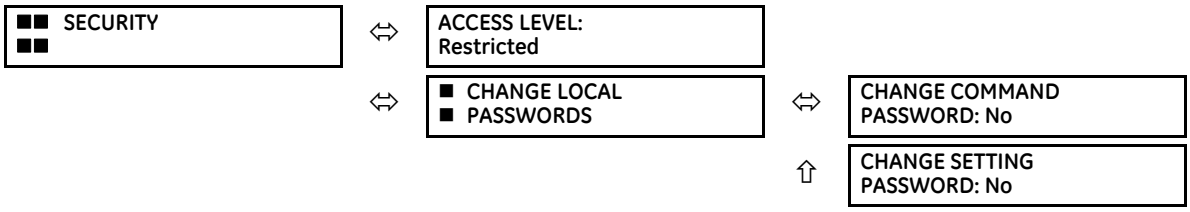

5. After the **CHANGE...PASSWORD** message appears on the display, press the **VALUE** up or down arrow to change the selection to "Yes."
6. Press the **ENTER** key and the display prompts you to **ENTER NEW PASSWORD**.
7. Type in a password and press the **ENTER** key.
8. When **VERIFY NEW PASSWORD** displays, re-type the password and press **ENTER**.

9. When the **NEW PASSWORD HAS BEEN STORED** message appears, your new Setting (or Command) password is active.

4.2.11 Invalid password entry

By default, when an incorrect Command or Setting password has been entered via the faceplate interface three times within five minutes, the LOCAL ACCESS DENIED FlexLogic operand is set to "On" and the F60 does not allow settings or command level access via the faceplate interface for five minutes.

By default, when an incorrect Command or Setting password has been entered via any external communications interface three times within five minutes, the REMOTE ACCESS DENIED FlexLogic operand is set to "On" and the F60 does not allow settings or command access via the any external communications interface for five minutes. The REMOTE ACCESS DENIED FlexLogic operand is set to "Off" after five minutes for a Command password or 30 minutes for a Settings password.

These default settings can be changed in EnerVista under **Settings > Product Setup > Security**.

4.3 Logic diagrams

Logic diagrams in this instruction manual provide an overview of function and settings. A logic diagram is based on

- Inputs-on the left side, which are setting and operands
- Logical gates, which is Boolean algebra to combine logical lines using AND, OR, NOT, and other gates to get a new logical state
- Logical operators, which are timers, one-shot operations, latches, and so on
- Outputs-on the right side, which are products of the manipulations with inputs, logical gates, and logical operators to produce new operands and define the output state of the element

True and false values are denoted by 1 and 0 respectively. A function usually is high/on/enabled when 1.

Reading from right to left in the following diagram, the TRIP BUS 1 OP and TRIP BUS 1 PKP FlexLogic operands on the right side are triggered when either the settings or reset latch in the middle of the diagram is triggered. When this applies, the TRIP BUS 1 OP operand is triggered after the delay set by the **TRIP BUS 1 PICKUP DELAY** or **TRIP BUS 1 RESET DELAY** setting, while the TRIP BUS 1 PKP operand initiates immediately. The settings or reset latch in the middle of the diagram is triggered as follows.

- For the reset, one of three conditions are required to meet the OR requirement shown at the bottom left. That is, the **TRIP BUS 1 LATCHING** setting must be 0=Disabled (which is negated by the NOT function to become 1=Enabled), output from the TRIP BUS 1 RESET FlexLogic operand must be 1, or output from the RESET OP FlexLogic operand must be 1.
- For the settings, one of 16 input conditions at the top left must be met for the OR, the **TRIP BUS 1 FUNCTION** must be Enabled, and the TRIP BUS 1 BLOCK output must output as 0, which is then negated/reversed by NOT to become 1.

Table 4-2: Logic diagram symbols

Symbol	Description
= Off	Output from FlexLogic operand, so user-defined
= Enabled	1 = Enabled and 0 = Disabled
OR	Any function input on the left side satisfies the condition
AND	All functions input on the left side are required to satisfy the condition
O	Not. Negates/reverses the output, for example 0 becomes 1.
●	Connection
S, R	Set, Reset
T_{PKP}	Timer pickup. Triggered by the settings latch in the diagram.
T_{RST}	Timer reset. Triggered by the reset latch in the diagram.

Figure 4-25: Logic diagram

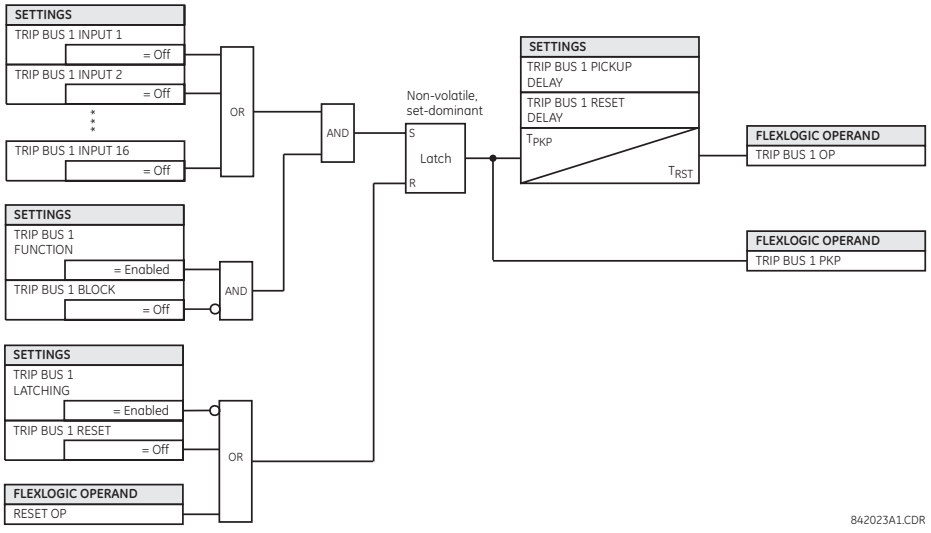

4

F60 Feeder Protection System

Chapter 5: Settings

This chapter outlines front panel and/or software settings. The relay is not taken out of service when saving settings; the relay is taken out of service when a settings file is written to it.

5.1 Settings menu

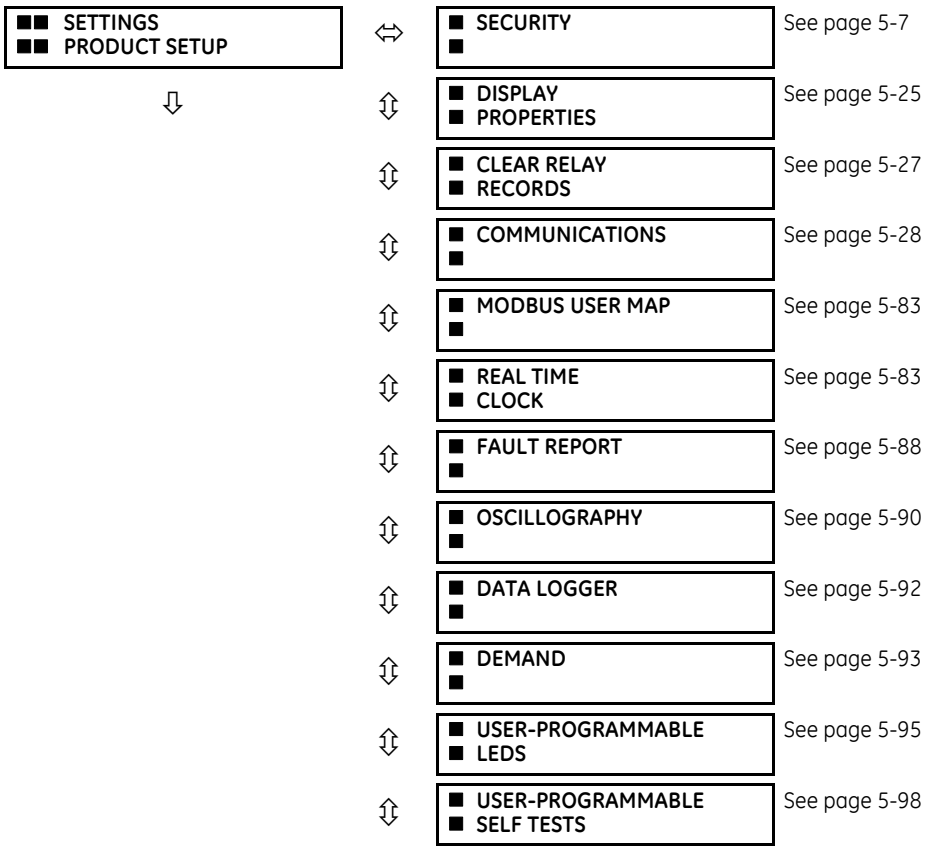

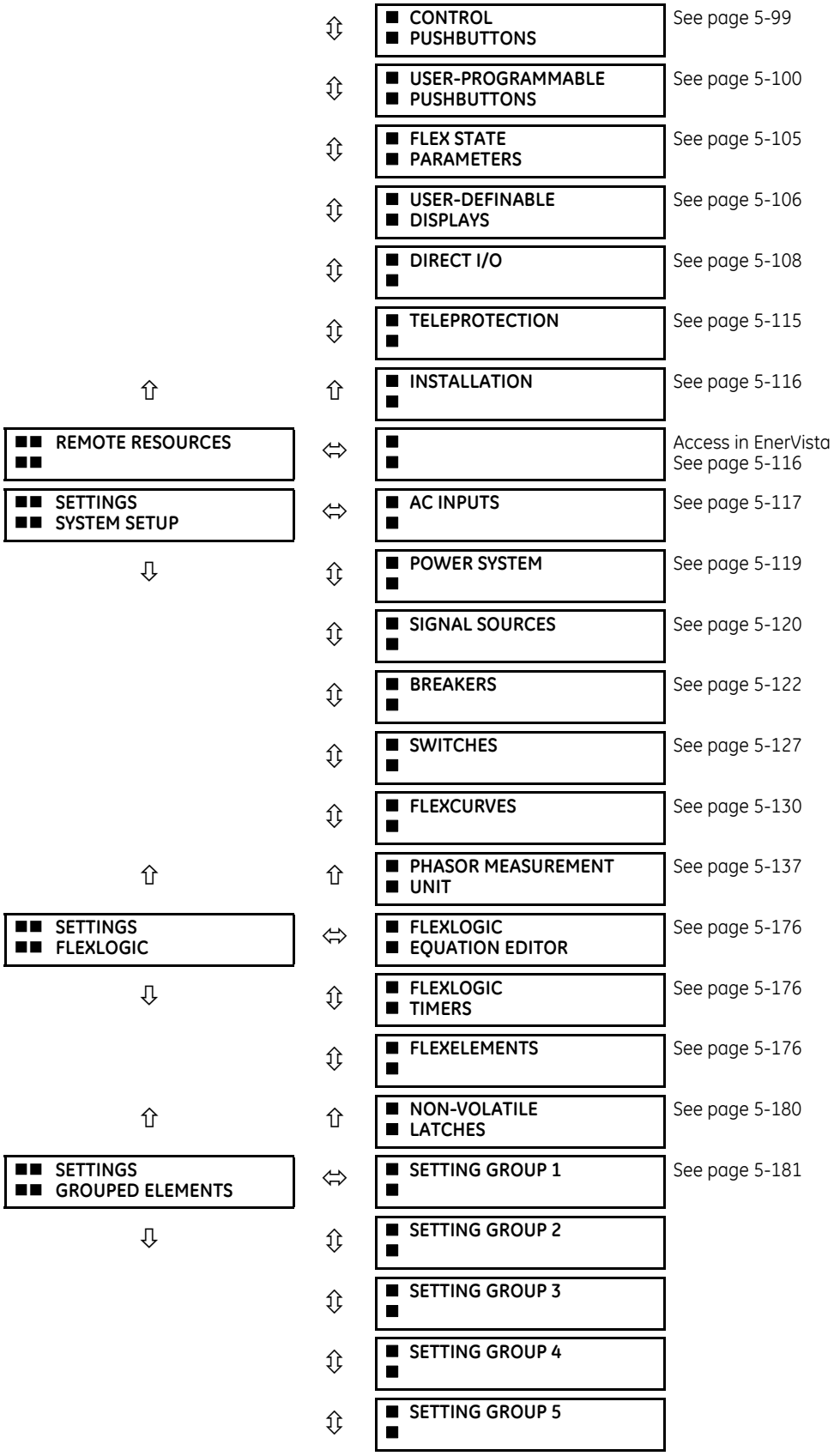
■■ REMOTE RESOURCES
■■
■■ SETTINGS
■■ SYSTEM SETUP
■■ SETTINGS
■■ FLEXLOGIC
■■ SETTINGS
■■ GROUPED ELEMENTS
■ CONTROL
■ PUSHBUTTONS
See page 5-99
■ USER-PROGRAMMABLE
■ PUSHBUTTONS
See page 5-100
■ FLEX STATE
■ PARAMETERS
See page 5-105
■ USER-DEFINABLE
■ DISPLAYS
See page 5-106
■ DIRECT I/O
■
See page 5-108
■ TELEPROTECTION
■
See page 5-115
■ INSTALLATION
■
See page 5-116
■
■
Access in EnerVista
See page 5-116
■ AC INPUTS
■
See page 5-117
■ POWER SYSTEM
■
See page 5-119
■ SIGNAL SOURCES
■
See page 5-120
■ BREAKERS
■
See page 5-122
■ SWITCHES
■
See page 5-127
■ FLEXCURVES
■
See page 5-130
■ PHASOR MEASUREMENT
■ UNIT
See page 5-137
■ FLEXLOGIC
■ EQUATION EDITOR
See page 5-176
■ FLEXLOGIC
■ TIMERS
See page 5-176
■ FLEXELEMENTS
■
See page 5-176
■ NON-VOLATILE
■ LATCHES
See page 5-180
■ SETTING GROUP 1
■
See page 5-181
■ SETTING GROUP 2
■
■ SETTING GROUP 3
■
■ SETTING GROUP 4
■
■ SETTING GROUP 5
■

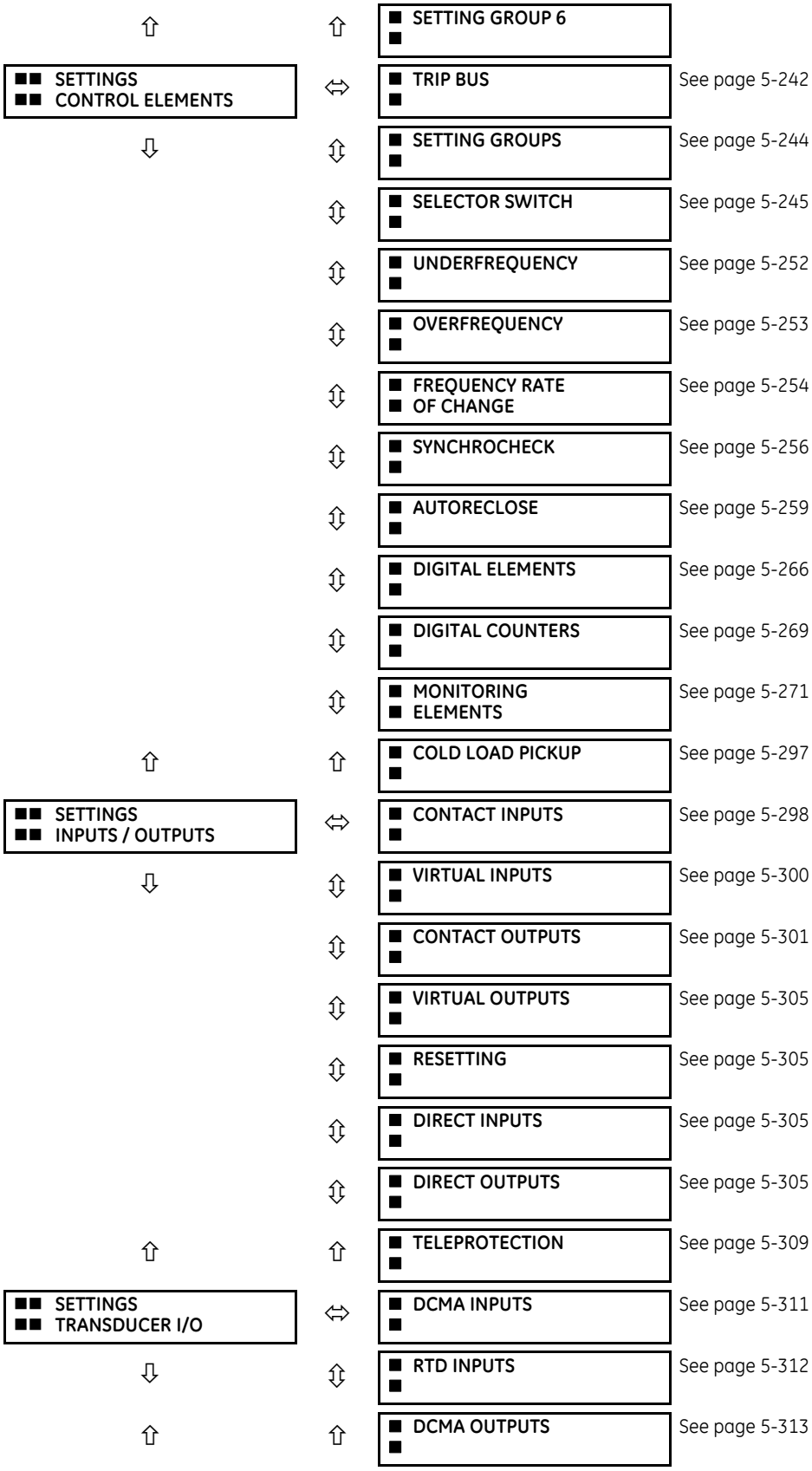

See page 5-242
See page 5-244
See page 5-245
See page 5-252
See page 5-253
See page 5-254
See page 5-256
See page 5-259
See page 5-266
See page 5-269
See page 5-271
See page 5-297
See page 5-298
See page 5-300
See page 5-301
See page 5-305
See page 5-305
See page 5-305
See page 5-305
See page 5-309
See page 5-311
See page 5-312
See page 5-313

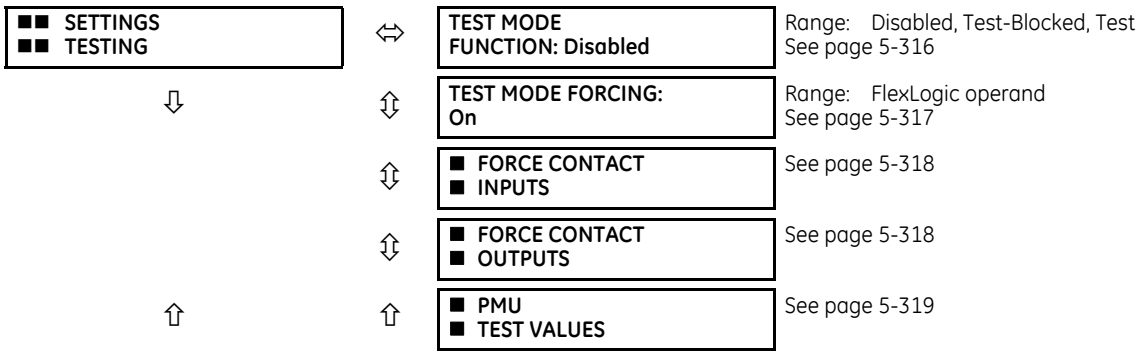

5.2 Overview

5.2.1 Introduction to elements

For URs, the term *element* is used to describe a feature that is based around a comparator. The comparator is provided with an input (or set of inputs) that is tested against a programmed setting (or group of settings) to determine if the input is within the defined range that sets the output to logic 1, also referred to as *setting the flag*. A single comparator can make multiple tests and provide multiple outputs. For example, the time overcurrent comparator sets a pickup flag when the current input is above the setting and sets an operate flag when the input current has been at a level above the pickup setting for the time specified by the time-current curve settings. All comparators use analog actual values as the input.

NOTE

An exception to this rule is digital elements, which use logic states as inputs.

Elements are arranged into two classes, *grouped* and *control*. Each element classed as a grouped element is provided with six alternate sets of settings, in setting groups numbered 1 through 6. The performance of a grouped element is defined by the setting group that is active at a given time. The performance of a control element is independent of the selected active setting group.

The main characteristics of an element are shown on a logic diagram. This includes the inputs, settings, fixed logic, and the output operands generated. The previous chapter explains how to read a logic diagram, and the abbreviations used in a diagram are defined in the Abbreviations chapter.

Some settings are specified in per-unit (pu) calculated quantities:

pu quantity = (actual quantity) / (base quantity)

Where the current source is from a single current transformer (CT), the *base quantity* is the nominal secondary or primary current of the CT. Use the secondary current base to convert per-unit settings to/from a secondary current value, and use the primary current base to convert to/from a primary current value.

Where the current source is the sum of two or more CTs with different nominal primary current, the primary base quantity is the largest nominal primary current. For example, if CT1 = 300 / 5 A and CT2 = 100 / 1 A, then in order to sum these, CT2 is scaled to the CT1 ratio. In this case, the base quantity is 300 A primary, 5 A secondary for CT1, and 300/(100/1) = 3 A secondary for CT2.

For voltage elements, the primary base quantity is the nominal phase-to-phase primary voltage of the protected system provided that the VT ratio setting is set to the nominal ratio of the VTs and the secondary voltage setting is set to the phase-to-phase voltage seen by the relay when the voltage of the protected system in nominal. The UR uses the convention that nominal voltages in a three-phase system are phase-to-phase voltages.

For example, on a system with a 13.8 kV nominal primary voltage, the base quantity is 13800 V. With 14400:120 V delta-connected VTs, the secondary base quantity and secondary voltage setting is:

$$\frac{13800}{14400} \times 120 = 115 \text{ V} \quad \textbf{Eq. 5-1}$$

For wye-connected VTs, the primary and secondary base quantities are as before, but the secondary voltage setting (here a phase-to-ground value) is:

$$\frac{13800}{14400} \times \frac{120}{\sqrt{3}} = 66.4 \text{ V} \quad \textbf{Eq. 5-2}$$

Many settings are common to most elements, outlined as follows:

- **FUNCTION setting** — This setting programs the element to operate when selected as "Enabled." The factory default is "Disabled." Once "Enabled," any element associated with the function becomes active and all options become available.
- **NAME setting** — This setting is used to uniquely identify the element.
- **SOURCE setting** — This setting is used to select the AC source to be monitored. See the Introduction to AC Sources section later.
- **PICKUP setting** — For simple elements, this setting is used to program the level of the measured parameter above or below which the pickup state is established. In more complex elements, a set of settings can be provided to define the range of the measured parameters that cause the element to pick up.
- **PICKUP DELAY setting** — This setting sets a time-delay-on-pickup, or on-delay, for the duration between the pickup and operate output states.
- **RESET DELAY setting** — This setting is used to set a time-delay-on-dropout, or off-delay, for the duration between the operate output state and the return to logic 0 after the input transits outside the defined pickup range.
- **BLOCK setting** — The default output operand state of all comparators is a logic 0 or "flag not set." The comparator remains in this default state until a logic 1 is asserted at the RUN input, allowing the test to be performed. If the RUN input changes to logic 0 at any time, the comparator returns to the default state. The RUN input is used to supervise the comparator. The BLOCK input is used as one of the inputs to RUN control.
- **TARGET setting** — This setting is used to define the operation of an element target message. When set to "Disabled," no target message or illumination of a faceplate LED indicator is issued upon operation of the element. When set to "Self-Reset," the target message and LED indication follow the operate state of the element and self-resets once the operate element condition clears. When set to "Latched," the target message and LED indication remains visible after the element output returns to logic 0 until a RESET command is received by the relay.
- **EVENTS setting** — This setting is used to control whether the pickup, dropout, or operate states are recorded by the event recorder. When set to "Disabled," element pickup, dropout, or operate are not recorded as events. When set to "Enabled," events are created for

  <Element> PKP (pickup)
  <Element> DPO (dropout)
  <Element> OP (operate)

  The DPO event is created when the measure and decide comparator output transits from the pickup state (logic 1) to the dropout state (logic 0). This can happen when the element is in the operate state if the reset delay time is not zero.

  Not every operand of a given element in a UR relay generates events, only the major output operands. Elements, asserting output per phase, log operating phase output only, without asserting the common three-phase operand event.

5.2.2 Introduction to AC sources

5.2.2.1 Background

A mechanism called a *source* configures the routing of CT and VT input channels to measurement sub-systems. Sources, in the context of UR series relays, refer to the logical grouping of current and voltage signals such that one source contains all the signals required to measure the load or fault in a particular power apparatus. A given source can contain all or some of the following signals: three-phase currents, single-phase ground current, three-phase voltages, and an auxiliary voltage from a single VT for checking for synchronism.

The basic idea of an AC source is to select a point on the power system where the voltages and currents are of interest. To illustrate the concept of sources, as applied to current inputs only, consider the breaker-and-a-half scheme that follows. (The breaker-and-a-half scheme is used for illustrative purposes and is available on select UR products.) In this application, the current flows as shown by the arrows. Some current flows through the upper bus bar to some other location or power equipment, and some current flows into transformer winding 1. The current into winding 1 is the phasor sum (or difference) of the currents in CT1 and CT2 (whether the sum or difference is used depends on the relative polarity of the CT connections). The same considerations apply to transformer winding 2. The protection elements require access to the net current for transformer protection, but some elements can need access to the individual currents from CT1 and CT2.

Figure 5-1: Breaker-and-a-half scheme

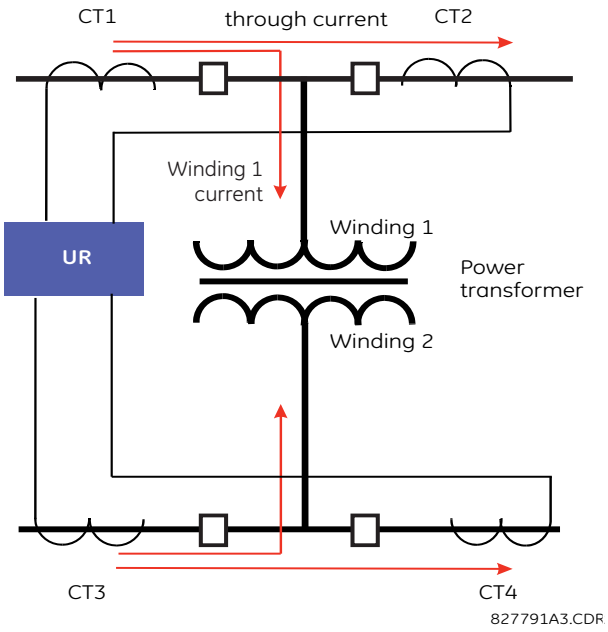

In conventional analog or electronic relays, the sum of the currents is obtained from an appropriate external connection of all CTs through which any portion of the current for the element being protected can flow. Auxiliary CTs are required to perform ratio matching if the ratios of the primary CTs to be summed are not identical. In the UR series of relays, provisions have been included for all the current signals to be brought to the UR device where grouping, ratio correction, and summation are applied internally via configuration settings.

A major advantage of using internal summation is that the individual currents are available to the protection device, for example as additional information to calculate a restraint current, or to allow the provision of additional protection features that operate on the individual currents, such as breaker failure.

Given the flexibility of this approach, it becomes necessary to add configuration settings to the platform to allow the user to select which sets of CT inputs are to be added to form the net current into the protected device.

The internal grouping of current and voltage signals forms an AC source. This source can be given a specific name through the settings and becomes available to protection and metering elements in the UR platform. Individual names can be given to each source to help identify them for later use. For example, in the scheme shown in the preceding figure, the user configures one source to be the sum of CT1 and CT2 and can name this source as "Wdg1 I."

Once the sources have been configured, the user has them available as selections for the choice of input signal for the protection elements and as metered quantities.

5.2.2.2 CT/VT module configuration

CT and voltage transformer (VT) input channels are contained in CT/VT modules. The type of input channel can be phase/neutral/other voltage, phase/ground current, or sensitive ground current. The CT/VT modules calculate total waveform RMS levels, fundamental frequency phasors, symmetrical components, and harmonics for voltage or current, as allowed by the hardware in each channel. These modules can calculate other parameters as directed by the CPU module.

A CT/VT module contains up to eight input channels, numbered 1 through 8. The channel numbering corresponds to the module terminal numbering 1 through 8 and is arranged as follows. Channels 1, 2, 3, and 4 are always provided as a group, hereafter called a "bank," and all four are either current or voltage, as are channels 5, 6, 7, and 8. Channels 1, 2, 3 and 5, 6, 7 are arranged as phase A, B, and C respectively. Channels 4 and 8 are either another current or voltage.

Banks are ordered sequentially from the block of lower-numbered channels to the block of higher-numbered channels, and from the CT/VT module with the lowest slot position letter to the module with the highest slot position letter, as follows.

Increasing slot position letter -->		
CT/VT module 1	**CT/VT module 2**	**CT/VT module 3**
< bank 1 >	< bank 3 >	< bank 5 >
< bank 2 >	< bank 4 >	< bank 6 >

The UR platform allows for a maximum of six sets of three-phase voltages and six sets of three-phase currents. The result of these restrictions leads to the maximum number of CT/VT modules in a chassis to three. The maximum number of sources is six. A summary of CT/VT module configurations is as follows.

Item	Maximum number
CT/VT Module	2
CT Bank (3 phase channels, 1 ground channel)	4
VT Bank (3 phase channels, 1 auxiliary channel)	2

5.2.2.3 CT/VT input channel configuration

Upon relay startup, configuration settings for every bank of current or voltage input channels in the relay are generated automatically from the order code. Within each bank, a channel identification label is assigned automatically to each bank of channels in a given product. The *bank* naming convention is based on the physical location of the channels, required by the user to know how to connect the relay to external circuits. Bank identification consists of the letter designation of the slot in which the CT/VT module is mounted as the first character, followed by numbers indicating the channel, either 1 or 5. See the HardFiber instruction manual for designations of HardFiber voltage and current banks.

For three-phase channel sets, the number of the lowest numbered channel identifies the set. For example, F1 represents the three-phase channel set of F1/F2/F3, where F is the slot letter and 1 is the first channel of the three channels.

Upon startup, the CPU configures the settings required to characterize the current and voltage inputs, and it displays them in the appropriate section in the sequence of the banks (as described earlier) as follows for a maximum configuration: F1, F5, M1, M5, U1, and U5.

5.3 Product setup

5.3.1 Security

5.3.1.1 Security overview

The following security features are available:

- Password security — Basic security present by default

- EnerVista security — Role-based access to various EnerVista software screens and configuration elements. The feature is present by default in the EnerVista software.
- CyberSentry security — Advanced security available as a software option. When purchased, the options are automatically enabled, and the default Password security and EnerVista security are disabled.

Lost password

If all passwords are lost, recovery is possible by resetting the unit to default values. Note that the relay is reset to default values, not just the passwords.

To reset the unit after a lost password:

1. Email GE customer service at multilin.tech@ge.com with the serial number and using a recognizable corporate email account. Customer service provides a code to reset the relay to the factory defaults.
2. Enter the reset code on the front panel, under **COMMANDS ⇨⇩ RELAY MAINTENANCE ⇨ SERVICE COMMAND**.
3. Change the default password of ChangeMe1# as outlined in the Set Up CyberSentry and Change Default Password section at the end of the Installation chapter.

Password requirements

A user account requires an alpha-numeric password that meets the following requirements:

- Password is case-sensitive
- Password cannot contain the user account name or parts of the user account that exceed two consecutive characters
- Password must be 6 to 20 characters in length
- Password must contain characters from three of the following four categories:
  - English uppercase characters (A through Z)
  - English lowercase characters (a through z)
  - Base 10 digits (0 through 9)
  - Non-alphabetic characters (for example, ~, !, @, #, $,%, &)

5

5.3.1.2 Password security

SETTINGS ⇨ PRODUCT SETUP ⇨ SECURITY

■ SECURITY ■	⇔	ACCESS LEVEL: Restricted	Range: Restricted, Command, Setting, Factory Service (for factory use only)
	⇩	■ CHANGE LOCAL ■ PASSWORDS	See page 5-10
	⇩	■ CHANGE REMOTE ■ PASSWORDS	See page 5-10
	⇩	■ AC CESS ■ SUPERVISION	See page 5-11
	⇩	■ DUAL PERMISSION ■ SECURITY ACCESS	See page 5-12
	⇧	PASSWORD ACCESS: EVENTS: Disabled	Range: Disabled, Enabled

The F60 supports password entry from a local or remote connection.

Local access is defined as access to settings or commands via the faceplate. This includes both keypad entry and the RS232 port. Remote access is defined as access to settings or commands via any rear communications port. This includes both Ethernet and RS485 connections. Any change to the local or remote password enables this functionality.

NOTE

For a relay without a CyberSentry software option, any user can activate the **RESET** button without password entry.

ACCESS LEVEL — The "Restricted" option means that settings and commands can be accessed, but there is no access to factory configuration. Access automatically reverts to the Restricted level according to the access level timeout setting values. The access level is set to Restricted when control power is cycled.

The "Factory Service" level is not available and intended for factory use only.

There are two user security access levels, setting and command, for which you can set a password for each. Use of a password for each level controls whether users can enter commands or change settings. Another option is to specify setting and/or command access for individual user accounts.

- **Setting** — Allows the user to make any changes to any of the setting values:
  - Changing any setting
  - Test mode operation
- **Command** — Restricts the user from making any settings changes, but allows the user to perform the following operations:
  - Operating the breakers via faceplate keypad
  - Changing the state of virtual inputs
  - Clearing the event records
  - Clearing the oscillography records
  - Clearing fault reports
  - Changing the date and time
  - Clearing the breaker arcing current
  - Clearing energy records
  - Clearing the data logger
  - Clearing the user-programmable pushbutton states

When entering a settings or command password via EnerVista or any serial interface, the user must enter the corresponding connection password. If the connection is to the back of the F60, the remote password must be used. If the connection is to the RS232 port of the faceplate, the local password must be used.

The local setting and command sessions are initiated by the user through the front panel display and are disabled either by the user or by timeout (via the setting and command level access timeout settings). The remote setting and command sessions are initiated by the user through the EnerVista software and are disabled either by the user or by timeout.

The state of the session (local or remote, setting or command) determines the state of the following FlexLogic operands:

- ACCESS LOC SETG OFF — Asserted when local setting access is disabled
- ACCESS LOC SETG ON — Asserted when local setting access is enabled
- ACCESS LOC CMND OFF — Asserted when local command access is disabled
- ACCESS LOC CMND ON — Asserted when local command access is enabled
- ACCESS REM SETG OFF — Asserted when remote setting access is disabled
- ACCESS REM SETG ON — Asserted when remote setting access is enabled
- ACCESS REM CMND OFF — Asserted when remote command access is disabled
- ACCESS REM CMND ON — Asserted when remote command access is enabled

NOTE

A command or setting write operation is required to update the state of the remote and local security operands listed.

PASSWORD ACCESS EVENTS — This setting allows recording of password access events in the event recorder.

Change local passwords

SETTINGS ⇨ PRODUCT SETUP ⇨ SECURITY ⇨⇩ CHANGE LOCAL PASSWORDS

■ CHANGE LOCAL ■ PASSWORDS	⇔	CHANGE COMMAND PASSWORD: No	Range: No, Yes
	⇧	CHANGE SETTING PASSWORD: No	Range: No, Yes

As outlined in the previous section, there are two user security access levels, setting and command. Use of a password for each level controls whether users can enter commands or change settings.

Proper password codes are required to enable each access level. When a **CHANGE COMMAND PASSWORD** or **CHANGE SETTING PASSWORD** setting is programmed to "Yes" via the front panel interface, the following message sequence is invoked:

1. ENTER NEW PASSWORD: _____.
2. VERIFY NEW PASSWORD: _____.
3. NEW PASSWORD HAS BEEN STORED.

To gain write access to a "Restricted" setting, program the **ACCESS LEVEL** setting in the main security menu to "Setting" and then change the setting, or attempt to change the setting and follow the prompt to enter the programmed password. If the password is correctly entered, access is allowed. Access automatically reverts to the "Restricted" level according to the access level timeout setting values and when power is cycled.

NOTE

If the setting and command passwords are identical, then this one password allows access to both commands and settings.

If a remote connection is established, local passcodes are not visible.

Change remote passwords

Proper passwords are required to enable each command or setting level access, which are explained in the previous section.

SETTINGS ⇨ PRODUCT SETUP ⇨ SECURITY ⇨⇩ CHANGE REMOTE PASSWORDS

■ CHANGE REMOTE ■ PASSWORDS	⇔	CHANGE SETTING PASSWORD: No	Range: No, Yes
	⇧	CHANGE COMMAND PASSWORD: No	Range: No, Yes

To set the command or setting password:

1. In the EnerVista software or from the front panel, navigate to **Settings > Product Setup > Security** menu item to open the remote password settings window.
2. Click the command or setting password **Change** button.
3. Enter the new password in the **New Password** field. Requirements are outlined in the Password Requirements section earlier in this chapter. When an original password has already been used, enter it in the **Enter Password** field and click the **Send Password to Device** button.
4. Re-enter the password in the **Confirm Password** field.

5. Click the **OK** button. The password is checked to ensure that it meets requirements.

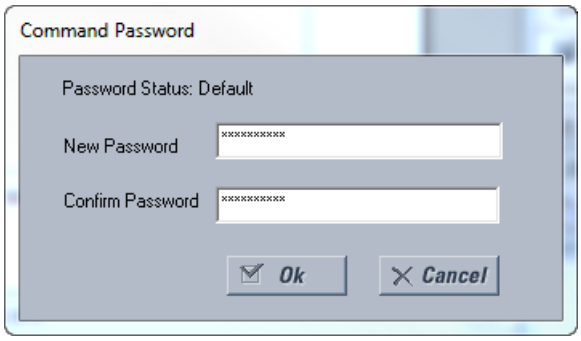

NOTE

If you establish a local (serial) connection to the relay, you cannot view remote passcodes.

Access supervision

SETTINGS ⇨ PRODUCT SETUP ⇨ SECURITY ⇨⇩ ACCESS SUPERVISION

■ ACCESS SUPERVISION	⇔	■ ACCESS LEVEL TIMEOUTS	See below
	⇩	INVALID ATTEMPTS BEFORE LOCKOUT: 3	Range: 2 to 5 in steps of 1
	⇧	PASSWORD LOCKOUT DURATION: 5 min	Range: 5 to 60 minutes in steps of 1

This menu displays when the **ACCESS LEVEL** setting is other than Restricted or Command.

The following access supervision settings are available.

INVALID ATTEMPTS BEFORE LOCKOUT — This setting specifies the number of times that an incorrect password can be entered within a three-minute time span before lockout occurs. When lockout occurs, the LOCAL ACCESS DENIED or REMOTE ACCESS DENIED FlexLogic operands are set to "On." These operands are returned to the "Off" state upon expiration of the lockout.

PASSWORD LOCKOUT DURATION — This setting specifies the time that the F60 locks out password access after the number of invalid password entries specified by the **INVALID ATTEMPTS BEFORE LOCKOUT** setting has occurred.

The F60 provides a means to raise an alarm upon failed password entry. If password verification fails while accessing a password-protected level of the relay (either settings or commands), the UNAUTHORIZED ACCESS FlexLogic operand is asserted. The operand can be programmed to raise an alarm via contact outputs or communications. This feature can be used to protect against both unauthorized and accidental access attempts.

The UNAUTHORIZED ACCESS operand is reset with the **COMMANDS ⇨⇩ CLEAR RECORDS ⇨⇩ RESET UNAUTHORIZED ALARMS** command. Therefore, to apply this feature with security, password-protect the Command level. The operand does not generate events or targets.

If events or targets are required, the UNAUTHORIZED ACCESS operand can be assigned to a digital element programmed with event logs or targets enabled.

The following table outlines access level timeout settings.

SETTINGS ⇨ PRODUCT SETUP ⇨ SECURITY ⇨⇩ ACCESS SUPERVISION ⇨⇩ ACCESS LEVEL TIMEOUTS

■ ACCESS LEVEL TIMEOUTS	⇔	COMMAND LEVEL ACCESS TIMEOUT: 5 min	Range: 5 to 480 minutes in steps of 1
	⇧	SETTING LEVEL ACCESS TIMEOUT: 30 min	Range: 5 to 480 minutes in steps of 1

These settings allow the user to specify the length of inactivity required before returning to the Restricted access level. Note that the access level is set to Restricted when control power is cycled.

COMMAND LEVEL ACCESS TIMEOUT — This setting specifies the length of inactivity (no local or remote access) required to return to Restricted access from the Command password level.

SETTING LEVEL ACCESS TIMEOUT — This setting specifies the length of inactivity (no local or remote access) required to return to Restricted access from the Settings password level.

Dual-permission security access

SETTINGS ⇨ PRODUCT SETUP ⇨ SECURITY ⇨⇩ DUAL PERMISSION SECURITY ACCESS

■ DUAL PERMISSION ■ SECURITY ACCESS	⇔	**LOCAL SETTING AUTH:** **On**	Range: selected FlexLogic operands (see below)
	⇩	**REMOTE SETTING AUTH:** **On**	Range: FlexLogic operand
	⇩	**ACCESS AUTH** **TIMEOUT: 30 min**	Range: 5 to 480 minutes in steps of 1

This menu displays when the **ACCESS LEVEL** setting is other than Restricted or Command.

This feature provides a mechanism to prevent unauthorized or unintended upload of settings to a relay through the local or remote interface.

The following settings are available through the local (front panel) interface only.

- **LOCAL SETTING AUTH** — This setting is used for local (front panel or RS232 interface) setting access supervision. Valid values for the FlexLogic operands are either "On" (default) or any physical "Contact Input ~~ On" value.

  If this setting is "On," then local setting access functions as normal; that is, a local setting password is required. If this setting is any contact input on FlexLogic operand, then the operand must be asserted (on) prior to providing the local setting password to gain setting access.

  If setting access is *not* authorized for local operation (front panel or RS232 interface) and the user attempts to obtain setting access, then the UNAUTHORIZED ACCESS message displays on the front panel.

  If this setting is "Off," firmware upgrades are blocked. If this setting is "On," firmware upgrades are allowed.

- **REMOTE SETTING AUTH** — This setting is used for remote (Ethernet or RS485 interface) setting access supervision.

  If this setting is "On" (the default setting), then remote setting access functions as normal; that is, a remote password is required. If this setting is "Off," then remote setting access is blocked even if the correct remote setting password is provided. If this setting is any other FlexLogic operand, then the operand must be asserted (set as on) prior to providing the remote setting password to gain setting access.

  If this setting is "Off," firmware upgrades are blocked. If this setting is "On," firmware upgrades are allowed.

- **ACCESS AUTH TIMEOUT** — This setting represents the timeout delay for local setting access. This setting is applicable when the **LOCAL SETTING AUTH** setting is programmed to any operand except "On." The state of the FlexLogic operand is monitored continuously for an off-to-on transition. When this occurs, local access is permitted and the timer programmed with the **ACCESS AUTH TIMEOUT** setting value is started. When this timer expires, local setting access is immediately denied. If access is permitted and an off-to-on transition of the FlexLogic operand is detected, the timeout is restarted. The status of this timer updates every five seconds.

The following settings are available through the remote (EnerVista UR Setup) interface only. Select the **Settings > Product Setup > Security** menu item to display the security settings window.

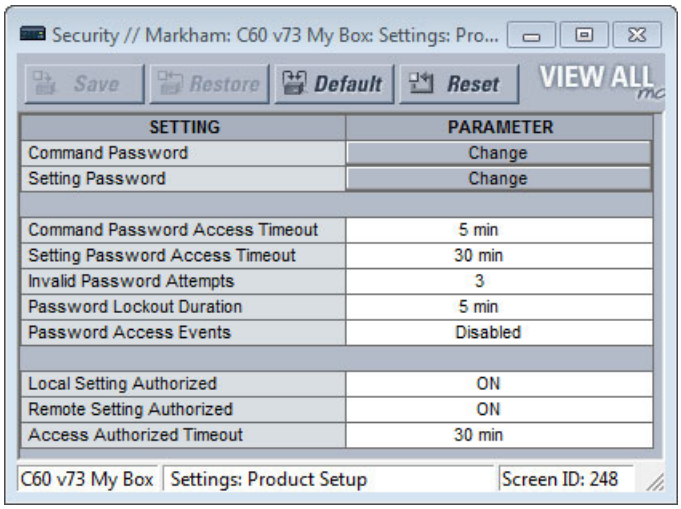

The **Remote Settings Authorized** setting is used for remote (Ethernet or RS485 interface) setting access supervision. If this setting is "On" (the default setting), then remote setting access functions as normal; that is, a remote password is required. If this setting is "Off," then remote setting access is blocked even if the correct remote setting password is provided. If this setting is any other FlexLogic operand, then the operand must be asserted (on) prior to providing the remote setting password to gain setting access.

The **Access Authorized Timeout** setting represents the timeout delay remote setting access. It applies when the **Remote Settings Authorized** setting is programmed to any operand except "On" or "Off." The state of the FlexLogic operand is continuously monitored for an off-to-on transition. When this occurs, remote setting access is permitted, and the timer programmed with the **Access Authorized Timeout** setting value is started. When this timer expires, remote setting access is denied immediately. If access is permitted and an off-to-on transition of the FlexLogic operand is detected, the timeout is restarted. The status of this timer updates every five seconds.

5.3.1.3 EnerVista security

Enable the security management system

Access to files is controlled by the operating system and EnerVista software as follows:

- Access privileges to files are defined by the Windows operating system. A standard user does not have access to a file created by an administrator or another user.
- When the EnerVista UR Setup software security system is disabled (passwords are not required), all users have administrator access

The EnerVista security system allows an administrator to manage access privileges of multiple users of EnerVista. It is disabled by default to allow access to the device immediately after installation. When security is disabled, all users have administrator access. GE recommends enabling the EnerVista security before placing the device in service.

To enable the security system and require password use:

1. Select the **Security > User Management** menu to open the user management window.

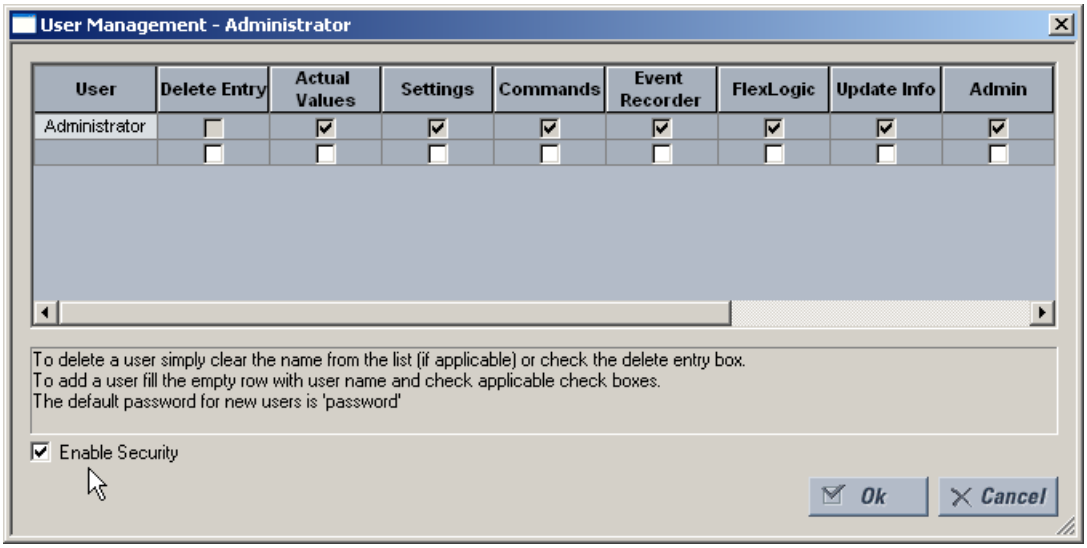

2. Enable the **Enable Security** check box in the lower-left corner to enable the security management system.
3. Click the **Ok** button.

NOTE

If you force password entry by using this feature, ensure that you know the Administrator password. If you do not know the password and are locked out of the software, contact GE Grid Solutions for the default password of a UR device. When using CyberSentry, the default password is "ChangeMe1#".

Security is now enabled for the EnerVista UR Setup software. Upon starting the software, users are now required to enter a username and password.

Add a new user

The following pre-requisites are required to add user accounts to the EnerVista security management system:

- The user adding the account must have administrator rights
- The EnerVista security management system must be enabled (previous section)

To add a user account:

1. Select the **Security > User Management** item from the top menu to open the user management window.
2. Enter a username in the **User** field. The username must be four to 20 characters in length.

3. Select the user access rights by enabling the check box of one or more fields.

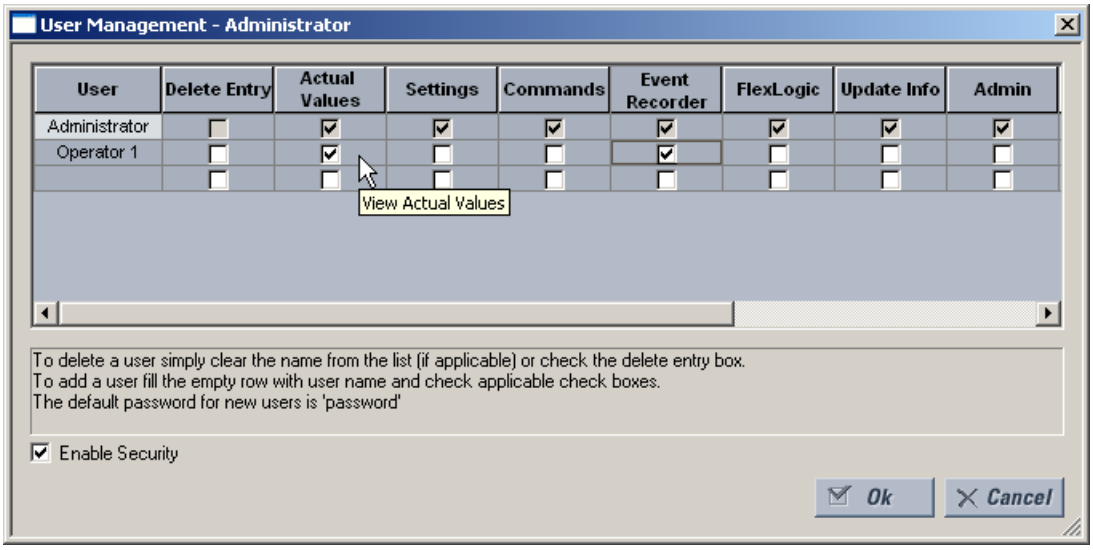

The table outlines access rights.

Table 5-1: Access rights summary

Field	Description
Delete Entry	Deletes the user account when exiting the user management window
Actual Values	Allows the user to read **Actual Values**
Settings	Allows the user to read **Settings** values
Commands	Allows the user to execute **Commands**
Event Recorder	Allows the user to use the **Event Recorder**
FlexLogic	Allows the user to read **FlexLogic** values
Update Info	Allows the user to write to any function to which they have read privileges. When any of the **Settings**, **Event Recorder**, and **FlexLogic** check boxes are enabled by themselves, the user is granted read access. When any of them are enabled in conjunction with the **Update Info** box, they are granted read and write access. The user is not granted write access to functions that are not enabled, even if the **Update Info** field is enabled.
Admin	When the check box is enabled, the user becomes an EnerVista UR Setup administrator and has all administrative rights. Exercise caution when granting administrator rights.

4. Click **OK** to add the user account to the system.

Modify user privileges

The following pre-requisites are required to modify user privileges in the EnerVista security management system:

- The user modifying the privileges must have administrator rights
- The EnerVista security management system must be enabled (the **Enable Security** check box enabled)

To modify user privileges:

1. Select the **Security > User Management** item from the top menu to open the user management window.
2. Locate the username in the **User** field.

3. Modify the user access rights by enabling or disabling one or more of the check boxes.

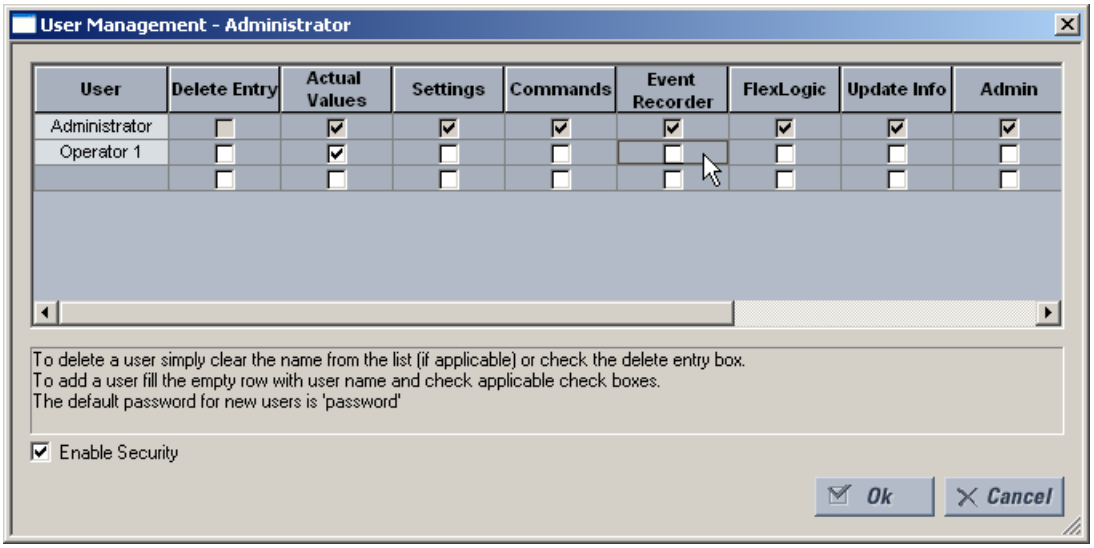

The table outlines access rights.

Table 5-2: Access rights summary

Field	Description
Delete Entry	Deletes the user account when exiting the user management window
Actual Values	Allows the user to read actual values
Settings	Allows the user to read setting values
Commands	Allows the user to execute commands
Event Recorder	Allows the user to use the digital fault recorder
FlexLogic	Allows the user to read FlexLogic values
Update Info	Allows the user to write to any function to which they have read privileges. When any of the **Settings**, **Event Recorder**, and **FlexLogic** check boxes are enabled by themselves, the user is granted read access. When any of them are enabled in conjunction with the **Update Info** box, they are granted read and write access. The user is not granted write access to functions that are not enabled, even if the **Update Info** field is enabled.
Admin	When this check box is enabled, the user becomes an EnerVista UR Setup administrator and has all administrative rights. Exercise caution when granting administrator rights.

4. Click **OK** to save the changes.

5.3.1.4 CyberSentry security

The EnerVista software provides the means to configure and authenticate the F60 access using either a server or the device. Access to functions depends on user role.

The login screen of EnerVista has two options for access to the F60, these being Server and Device authentication.

Figure 5-2: Login screen for CyberSentry

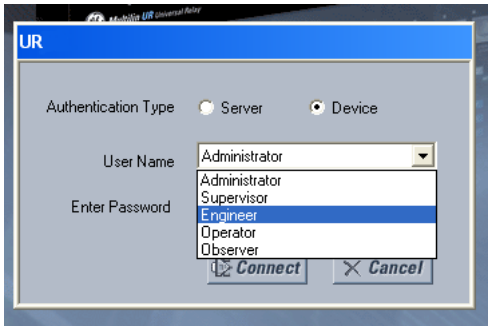

When the "Server" **Authentication Type** is selected, the F60 uses the RADIUS server and not its local authentication database to authenticate the user.

When the "Device" button is selected, the F60 uses its local authentication database and not the RADIUS server to authenticate the user. In this case, it uses built-in roles (Administrator, Engineer, Supervisor, Operator, Observer, or Administrator and Supervisor when Device Authentication is disabled), as login accounts and the associated passwords are stored on the F60 device. In this case, access is not user-attributable. In cases where user-attributable access is required, especially for auditable processes for compliance reasons, use server authentication (RADIUS) only.

No password or security information is displayed in plain text by the EnerVista software or the UR device, nor are they ever transmitted without cryptographic protection.

NOTE

Only (TCP/UDP) ports and services that are needed for device configuration and for customer enabled features are open. All the other ports are closed. For example, Modbus is on by default, so its TCP port 502, is open. But if Modbus is disabled, port 502 is closed. This function has been tested and no unused ports have been found open.

When CyberSentry is enabled, Modbus communications over Ethernet is encrypted, which is not always tolerated by SCADA systems. The UR has a bypass access feature for such situations, which allows unencrypted Modbus over Ethernet. The **Bypass Access** setting is available on the **SETTINGS ⇨ PRODUCT SETUP ⇨ SECURITY ⇨⇩ SUPERVISORY** screen. Note that other protocols (DNP, 101, 103, 104, EGD) are not encrypted, and they are good communications options for SCADA systems when CyberSentry is enabled.

When using the rear RS485 port and CyberSentry, registers can be read with a maximum buffer of 64 bytes. Settings may or may not be written, so use another port or configure the **SERIAL INACTIVITY TIMEOUT** setting to a high value, such as eight minutes, to give the relay enough time to finish the task.

CyberSentry settings through EnerVista

CyberSentry security settings are configured under **Device > Settings > Product Setup > Security**.

For the **Device > Settings > Product Setup > Supervisory** option, the panel looks like the following.

Figure 5-3: Supervisory panel

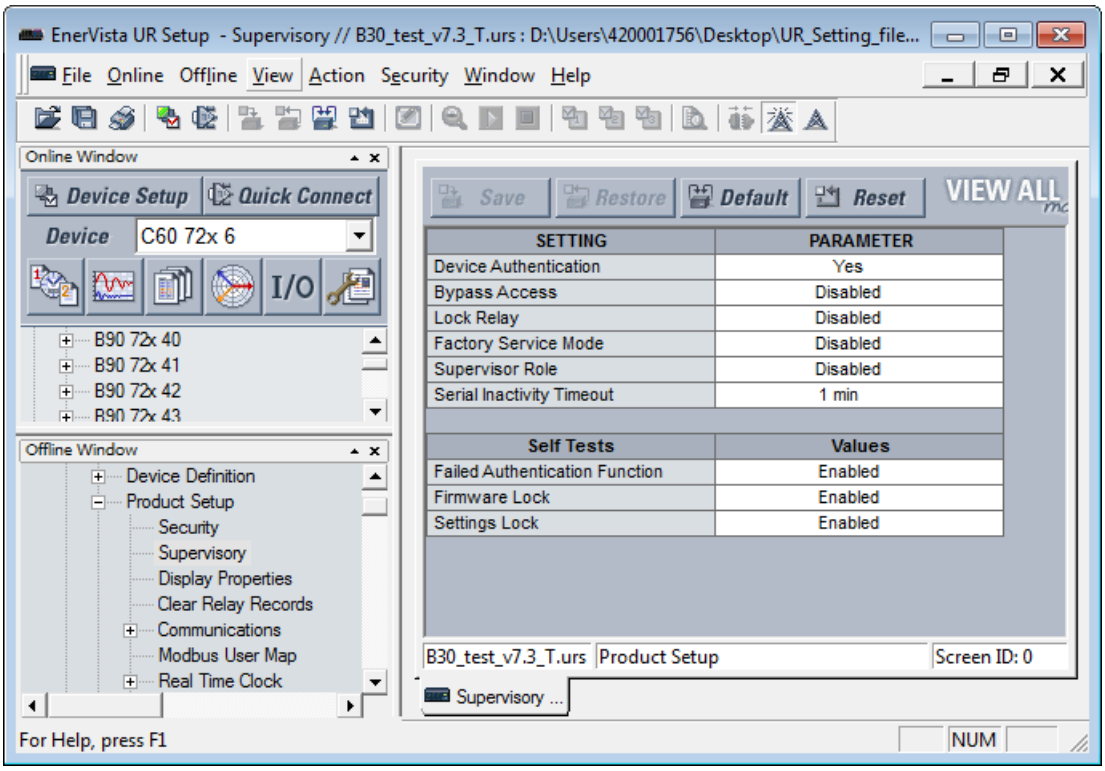

For the Security panel, the following settings are available.

Table 5-3: RADIUS server settings

Setting name	Description	Minimum	Maximum	Default	Units	Minimum permission
Primary RADIUS IP Address	IP address of the main RADIUS server. Default value indicates no Primary RADIUS server is configured, and hence RADIUS is disabled. Restart the relay for any change to take effect.	0.0.0.0	223.255.255.254	0.0.0.0	-	Administrator
Primary Authentication Port	RADIUS authentication port	1	65535	1812	-	Administrator
Primary Accounting Port	RADIUS accounting port	1	65535	1813	-	Administrator
Vendor ID	An identifier that specifies RADIUS vendor-specific attributes used with the protocol			Value that represents General Electric		Administrator
RADIUS Authentication (Shared) Secret	Shared secret used in authentication. It displays as asterisks. This setting must meet the CyberSentry password requirements.	See the Password Requirements section earlier in this chapter	See the following password section for requirements	N/A	-	Administrator
RADIUS Authentication Method	Authentication method used by RADIUS server. Currently fixed to EAP-TTLS.	EAP-TTLS	EAP-TTLS	EAP-TTLS	-	Administrator
Confirm RADIUS Authentication (Shared) Secret	Confirmation of the shared secret. The entry displays as asterisks.	See the Password Requirements section	245 characters	N/A	-	Administrator

Table 5-4: General security settings

Setting name	Description	Minimum	Maximum	Default	Units	Minimum permission
Session Lockout	Number of failed authentications before the device blocks subsequent authentication attempts for the lockout period	0 (lockout disabled)	99	3	-	Administrator
Session Lockout Period	The period in minutes that a user is prevented from logging in after being locked out	0 (no period)	9999	3	min	Administrator
Syslog Server IP Address	The IP address of the target Syslog server to which all security events are transmitted	0.0.0.0	223.255.255.254	0.0.0.0	-	Administrator
Syslog Server Port Number	The UDP port number of the target syslog server to which all security events are transmitted	1	65535	514	-	Administrator
Device Authentication	When enabled, local Device authentication with roles is allowed. When disabled, the UR only authenticates to the AAA server (RADIUS). **NOTE:** Administrator and Supervisor (if still enabled) remain active even after Device authentication is disabled. The only permission for local Administrator is to re-enable Device authentication when Device authentication is disabled. To re-enable Device authentication, the Supervisor unlocks the device for setting changes, and then the Administrator can re-enable Device authentication.	Disabled	Enabled	Enabled	-	Administrator
Firmware Lock (via Lock Relay)	Indicates if the device receives firmware upgrades. If Enabled and the firmware upgrade attempt is made, the device denies the upgrade and displays an error message that the lock is set. On each firmware upgrade, this setting goes back to the default. The Lock Relay setting blocks settings and firmware updates.	Disabled	Enabled	Enabled	-	Administrator
Factory Service Mode	When enabled, the device can go into factory service mode. To enable, Supervisor authentication is necessary.	Disabled	Enabled	Disabled	-	Supervisor (Administrator when Supervisor is disabled)
Restore to Defaults	Sets the device to factory defaults	No	Yes	No	-	Administrator
Supervisor Role	When enabled, the Supervisor role is active. To enable, Administrator authentication is necessary. When disabled, the Supervisor role is inactive. To disable, Supervisor authentication is necessary.	Disabled	Enabled	Enabled	-	Administrator to enable and Supervisor to disable
RADIUS user names	Ensures that RADIUS user names are not the same as local/device role names	See RADIUS server documents	See RADIUS server documents		-	Administrator
Password	Local/device roles except for Observer are password-protected. All RADIUS users are password-protected.	See the Password Requirements section earlier in this chapter	See the following password section for requirements	Change Me1#	Text	The specified role and Administrator, except for Supervisor, where it is only itself

Table 5-5: Security alarm settings

Setting name	Description / Details	Min	Max	Default	Units	Minimum permissions
Failed Authentications	A threshold number indicating when an alarm is set off to indicate too many failed authentication attempts	Disabled	Enabled	Enabled	-	Administrator

Setting name	Description / Details	Min	Max	Default	Units	Minimum permissions
Firmware Lock	A value indicating if the device can receive a firmware upgrade. If Enabled and a firmware upgrade attempt is made, the device alarm activates. If Disabled, the device alarm does not activate. On each firmware upgrade this setting goes back to the default.	Disabled	Enabled	Enabled	-	Administrator
Settings Lock	A value indicating if the device can accept any settings changes. If Enabled and a settings change attempt is made, the device alarm activates. If Disabled, the device alarm does not activate.	Disabled	Enabled	Enabled	-	Supervisor (Administrator if Supervisor has been disabled)

CyberSentry settings through the front panel

SETTINGS ⇨ PRODUCT SETUP ⇨ SECURITY

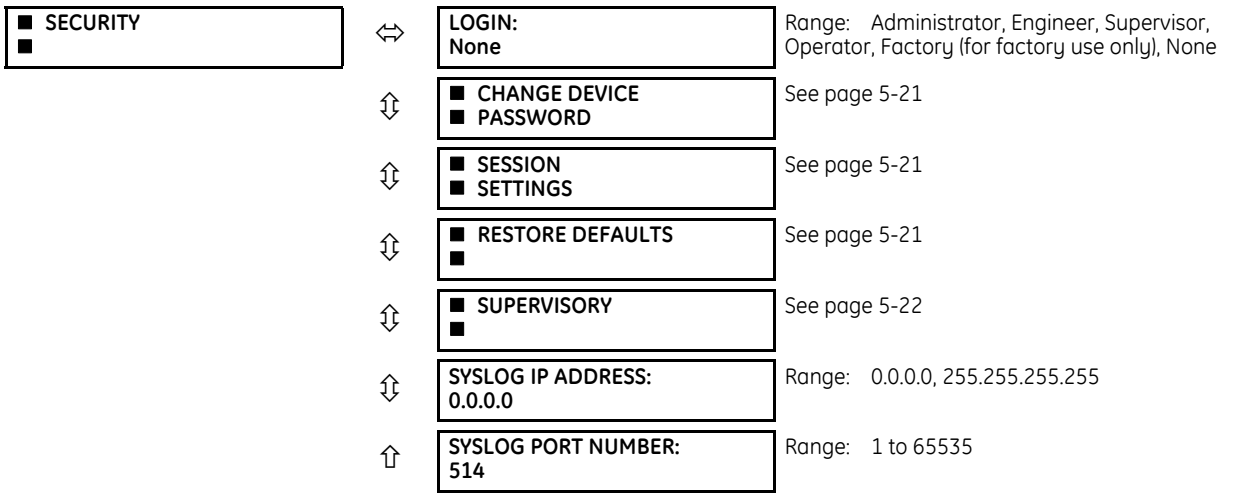

LOGIN — This setting is applicable for Device authentication only. This setting allows a user to log in with a specific role, as outlined here. For the Supervisor role, enable the "Supervisor Role" setting.

Whenever a new role is logged in, the user is prompted to enter a password. Passwords must obey the requirements specified earlier in the chapter in the Password Requirements section.The UR device supports five roles. Roles have their corresponding passwords, except the Observer role, which does not require a password. There are no time-outs for the Administrator, Engineer, Operator, and Supervisor when logged in using the front panel; log out manually or use the **Command > Security** commands in the software.

The roles are defined as follows:

- Administrator — Complete read/write access to all settings and commands. This role does not allow concurrent access. This role has an operand to indicate when it is logged on.
- Engineer — Complete read/write access to all settings and commands except configuring Security settings and firmware upgrades. This role does not allow concurrent access.
- Operator — The Operator has read/write access to all settings under the Commands menu/section. This role does not exist offline.
- Supervisor — This is only an approving role. This role's authentication commits setting changes submitted by Administrator or Engineer. The Supervisor role authenticates to unlock the UR relay for setting changes and not approve changes after the fact. Only a Supervisor can set the Settings Lock and Firmware Lock in the Security settings. This role also has the ability to forcefully log off any other role and clear the security event log. This role can also be disabled, but only through a Supervisor authentication. When this role is disabled its permissions are assigned to the Administrator role.
- Observer — This role has read-only access to all F60 settings. This role allows concurrent access but it has no download access to any files on the device. Observer is the default role if no authentication has been done to the

device. This role displays as "None" on the front panel. When local authentication is used, no password is required for this role. When RADIUS server authentication is used, a password is required.

NOTE

The Factory service role is not available. It is for factory use only.

Change device password

SETTINGS ⇨ PRODUCT SETUP ⇨ SECURITY ⇨⇩ CHANGE DEVICE PASSWORD

■ CHANGE DEVICE PASSWORD	⇔	NEW PASSWORD:	Range: 20 alphanumeric characters
	⇧	CONFIRM PASSWORD:	Range: 20 alphanumeric characters

The menu displays on the front panel and in EnerVista upon successful login of the Administrator role.

Passwords are stored in text format. No encryption is applied.

NOTE

In Device authentication mode, the Observer role does not have a password associated with it. In Server authentication mode the Observer role requires a password.

If you are locked out of the software, contact GE Grid Solutions for the default password. When using CyberSentry, the default password is "ChangeMe1#".

Once the passwords are set, the Administrator with Supervisor approval can change the role-associated password.

In CyberSentry, password encryption is not supported.

Session settings

SETTINGS ⇨ PRODUCT SETUP ⇨ SECURITY ⇨⇩ SESSION SETTINGS

■ SESSION SETTINGS	⇔	SESSION LOCKOUT: 3	Range: 0 to 99
	⇧	SESSION LOCKOUT PERIOD: 3 min	Range: 0 to 9999 minutes

SESSION LOCKOUT — This setting specifies the number of failed authentications before the device blocks subsequent authentication attempts for the lockout period. A value of zero means lockout is disabled.

SESSION LOCKOUT PERIOD — This setting specifies the period of time in minutes of a lockout period. A value of 0 means that there is no lockout period.

Restore defaults

SETTINGS ⇨ PRODUCT SETUP ⇨ SECURITY ⇨⇩ RESTORE DEFAULTS

■ RESTORE DEFAULTS ■	⇔	LOAD FACTORY DEFAULTS: No	Range: Yes, No

LOAD FACTORY DEFAULTS — This setting is used to reset all the settings, communication, and security passwords. An Administrator role is used to change this setting and a Supervisor role (if not disabled) approves it.

Supervisory

SETTINGS ⇨ PRODUCT SETUP ⇨ SECURITY ⇨⇩ SUPERVISORY

■ SUPERVISORY ■	⇔	DEVICE AUTHENTICATION: Yes — Range: Yes, No
	⇩	BYPASS ACCESS: Disabled — Range: Local, Remote, Local and Remote, Disabled
	⇩	LOCK RELAY: Disabled — Range: Enabled, Disabled
	⇩	FACTORY SERVICE MODE: Disabled — Range: Enabled, Disabled
	⇩	■ SELF TESTS ■ — See below
	⇩	SUPERVISOR ROLE: Disabled — Range: Enabled, Disabled
	⇩	SERIAL INACTIVITY TIMEOUT: 1 min — Range: 1 to 9999 minutes

The Supervisory menu settings are available for Supervisor role only, or if the Supervisor role is disabled then for the Administrator role only.

DEVICE AUTHENTICATION — This setting is enabled by default, meaning "Yes" is selected. When enabled, Device authentication with roles is enabled. When this setting is disabled, the UR only authenticates to the AAA server (RADIUS). However, the Administrator and Supervisor (when enabled) remain active even after device authentication is disabled and their only permission is to re-enable Device authentication. To re-enable Device authentication, the Supervisor unlocks the device for settings changes, then the Administrator re-enables device authentication.

BYPASS ACCESS — The bypass security feature provides an easier access, with no authentication and encryption for those special situations when this is considered safe. Only the Supervisor, or the Administrator when the Supervisor role is disabled, can enable this feature.

Mode	Front panel or serial (RS232, RS485)	Ethernet
Normal mode	Authentication — Role Based Access Control (RBAC) and passwords in clear	Authentication — RBAC and passwords encrypted SSH tunneling
Bypass access mode	No passwords for allowed RBAC levels	No passwords for allowed RBAC levels No SSH tunneling

The bypass options are as follows:

- Local — Bypasses authentication for push buttons, keypad, and RS232
- Remote — Bypasses authentication for RS485 and Ethernet
- Local and Remote — Bypasses authentication for push buttons, keypad, RS232, RS485, and Ethernet

LOCK RELAY — This setting uses a Boolean value (Enabled/Disabled) to indicate if the device accepts settings changes and whether the device can receive a firmware upgrade. This setting can be changed by the Supervisor role, if it is enabled, or by the Administrator if the Supervisor role is disabled. The Supervisor role disables this setting for the relay to start accepting settings changes, command changes, or firmware upgrade. After all the setting changes are applied or commands executed, the Supervisor enables to lock settings changes.

Example: If this setting is enabled and an attempt is made to change settings or upgrade the firmware, the UR device denies the settings changes or denies upgrading the firmware. If this setting is disabled, the UR device accepts settings changes and firmware upgrade.

This role is disabled by default.

FACTORY SERVICE MODE — When Enabled, the device can go into factory service mode. For this setting to become enabled a Supervisor authentication is necessary. The default value is Disabled.

SUPERVISOR ROLE — When Enabled, the Supervisor role is active. To Disable this setting a Supervisor authentication is necessary. If disabled, the Supervisor role is not allowed to log in. In this case, the Administrator can change the settings under the Supervisory menu.

If enabled, Supervisor authentication is required to change the settings in the Supervisory menu. If the Supervisor disables their role after authentication, the Supervisor session remains valid until they switch to another role using MMI or until they end the current Supervisor session if using communications.

This role is disabled by default.

SERIAL INACTIVITY TIMEOUT — The role logged via a serial port is auto logged off after the Serial Inactivity timer times out. A separate timer is maintained for RS232 and RS485 connections. Set this value to a high number, such as eight minutes, when using the rear RS485 terminals for settings write.

Self-tests

SETTINGS ⇨ PRODUCT SETUP ⇨ SECURITY ⇨⇩ SUPERVISORY ⇨ SELF TESTS

■ SELF TESTS ■	⇔	■ FAILED ■ AUTHENTICATE	See below
	⇳	FIRMWARE LOCK: Enabled	Range: Enabled, Disabled
	⇧	SETTINGS LOCK: Enabled	Range: Enabled, Disabled

FAILED AUTHENTICATE — When Enabled, the number of failed authentications is compared with the Session Lockout threshold. When the Session Lockout threshold is exceeded, a minor alarm indication comes up. Operand is AUTHENTICATION FAIL.

FIRMWARE LOCK — When Enabled, any firmware upgrade attempt brings up a minor self-test alarm. Operand is UNAUTH FW ATTEMPT.

SETTINGS LOCK — When Enabled, an unauthorized write attempt to a setting for a given role activates a minor self test alarm. Operand is UNAUTH SETTING WRITE.

SETTINGS ⇨ PRODUCT SETUP ⇨ SECURITY ⇨⇩ SUPERVISORY ⇨ SELF TESTS ⇨ FAILED AUTHENTICATE

■ FAILED ■ AUTHENTICATE	⇔	FAILED AUTHENTICATE: Enabled	Range: Enabled, Disabled

CyberSentry setup

When first using CyberSentry security, use the following procedure for setup.

1. Log in to the relay as Administrator by using the **VALUE** keys on the front panel to enter the default password "ChangeMe1#". Note that the Lock Relay setting needs to be disabled in the **Security > Supervisory** menu. When this setting is disabled, configuration and firmware upgrade are possible. By default, this setting is disabled.
2. Enable the Supervisor role if you have a need for it.
3. Make any required changes in configuration, such as setting a valid IP address for communication over Ethernet.
4. Log out of the Administrator account by choosing None.
5. Next, Device or Server authentication can be chosen on the login screen, but the choice is available only in EnerVista. Use Device authentication to log in using the five pre-configured roles (Administrator, Supervisor, Engineer, Operator, Observer). When using a serial connection, only Device authentication is supported. When Server authentication is required, characteristics for communication with a RADIUS server must be configured. This is possible only in the EnerVista software. The RADIUS server itself also must be configured. The appendix called RADIUS Server at the end of this instruction manual gives an example of how to set up a simple RADIUS server. Once both the RADIUS server and the parameters for connecting the UR to the server have been configured, you can choose Server authentication on the login screen of EnerVista.

NOTICE

The use of CyberSentry for devices communicating through an Ethernet-to-RS485 gateway is not supported. Because these gateways do not support the secure protocols necessary to communicate with such devices, the connection cannot be established. Use the device as a non-CyberSentry device.

Users logged in through the front panel are not timed out and cannot be forcefully logged out by a supervisor. Roles logged in through the front panel that do no allow multiple instances (Administrator, Supervisor, Engineer, Operator) must switch to None (equivalent to a logout) when they are done in order to log out.

For all user roles except Observer, only one instance can be logged in at a time, for both login by front panel and software.

To configure Server authentication:

1. In the EnerVista software, choose Device authentication and log in as Administrator.
2. Configure the following RADIUS server parameters: IP address, authentication port, shared secret, and vendor ID.
3. On the RADIUS server, configure the user accounts. Do not use the five pre-defined roles as user names (Administrator, Supervisor, Engineer, Operator, Observer) in the RADIUS server. If you do, the UR relay automatically provides the authentication from the device.
4. In the EnerVista software, choose Server authentication and log in using the user name and password configured on the RADIUS server for Server authentication login.
5. After making any required changes, log out.

NOTICE

When changing settings offline, ensure that only settings permitted by the role that performs the settings download are changed because only those changes are applied.

Pushbuttons (both user-control buttons and user-programmable buttons) located on the front panel can be pressed by an Administrator or Engineer role. This also applies to the **RESET** button, which resets targets, where targets are errors displayed on the front panel or the Targets panel of the EnerVista software. The **RESET** button has special behavior in that it allows these two roles to press it even when they are logged in through the RS232 port and not through the front panel.

To reset the security event log and self-test operands:

1. Log in as Supervisor (if the role is enabled) or Administrator (if the Supervisor role is disabled) and execute a clear security command under **Commands > Security > Clear Security**.

Syslog format

System logs are produced with the CyberSentry option. The format is as follows.

	Security log	Event Number	Date & Timestamp	Username	IP address	Role	Activity Value

Event Number — Event identification number (index)

Date & Timestamp — UTC date and time

Username — 255 chars maximum, but in the security log it is truncated to 20 characters

IP address — Device IP address

Role — 16 bit unsigned, of type format F617

Enumeration	Role
0	None
1	Administrator
2	Supervisor
3	Engineer
4	Operator
5	Factory

Activity Value — 16 bit unsigned

Enumeration	Description
1	Authentication Failed
2	User Lockout
3	FW Upgrade
4	FW Lock
5	Settings Lock
6	Settings Change. Because this can fill the entire event log, it is supported by the already existing Settings_Change.log file. This event is not required.
7	Clear Oscillography command
8	Clear Data Logger command (not applicable to all UR products)
9	Clear Demand Records command (not applicable to all UR products)
10	Clear Energy command (not applicable to all UR products)
11	Clear Unauthorized Access command
12	Clear Teleprotection Counters command (not applicable to all UR products)
13	Clear All Relay Records command
14	Role Log in
15	Role Log off

The following events are recorded in the syslog.

Table 5-6: System events recorded

Event	Severity	Description
FAILED_AUTH, ORIGIN, TIMESTAMP	Warning (4)	A failed authentication with origin information (username and IP:MAC address), a time stamp in UTC time when it occurred
AUTH_LOCKOUT, ORIGIN, TIMESTAMP	Error (3)	An authentication lockout has occurred because of too many failed authentication attempts
FIRMWARE_UPGD, ORIGIN, TIMESTAMP	Warning (4)	Indicates that a change of firmware has occurred
FIRMWARE_LOCK, ORIGIN, TIMESTAMP	Critical (1)	An attempt was made to change firmware while the firmware lock was enabled
SETTING_CHG, ORIGIN, TIMESTAMP	Notice (5)	Indicates setting change(s)
SETTING_LOCK, ORIGIN, TIMESTAMP	Critical (1)	An attempt was made to change settings while the settings lock was enabled
LOGIN, ORIGIN, TIMESTAMP	Warning (4)	Indicates when a certain role logged in
LOGOUT, ORIGIN, TIMESTAMP	Notice (5)	Indicates when a certain role logged out or timed out
CLEAR_OSCILLOGRAPHY	Notice (5)	Clear oscillography command was issued
CLEAR_DATA_LOGGER	Notice (5)	Clear data logger command was issued
CLEAR_DEMAND_RECS	Notice (5)	Clear demand records command was issued
CLEAR_ENERGY	Notice (5)	Clear energy command was issued
RESET_UNAUTH_ACCESS	Warning (4)	Reset Unauthorized access command was issued
CLEAR_TELEPROTECTION_CNT	Notice (5)	Clear teleprotection counters command was issued
CLEAR_ALL_RECS	Warning (4)	Clear all records command was issued

5.3.2 Display properties

SETTINGS ⇨ PRODUCT SETUP ⇨⇩ DISPLAY PROPERTIES

■ DISPLAY ■ PROPERTIES	⇔	**LANGUAGE:** **English**

Range: English; English, French; English, Russian; English, Chinese; English, German (examples; depends on order code)
Visible when language other than English purchased

⇳	**FLASH MESSAGE TIME: 1.0 s**	Range: 0.5 to 10.0 s in steps of 0.1
⇳	**DEFAULT MESSAGE TIMEOUT: 300 s**	Range: 10 to 900 s in steps of 1
⇳	**DEFAULT MESSAGE INTENSITY: 25 %**	Range: 25%, 50%, 75%, 100% Visible when a VFD is installed
⇳	**SCREEN SAVER FEATURE: Disabled**	Range: Disabled, Enabled Visible when an LCD is installed
⇳	**SCREEN SAVER WAIT TIME: 30 min**	Range: 1 to 65535 min. in steps of 1 Visible when an LCD is installed
⇳	**CURRENT CUT-OFF LEVEL: 0.020 pu**	Range: 0.002 to 0.020 pu in steps of 0.001
⇧	**VOLTAGE CUT-OFF LEVEL: 1.0 V**	Range: 0.1 to 1.0 V secondary in steps of 0.1

Some relay messaging characteristics can be modified to suit different situations using the display properties settings.

LANGUAGE — This setting selects the language used to display settings, actual values, and targets. This setting displays when a language other than English was purchased, and the range depends on the order code of the relay. Restart the relay after changing this setting.

FLASH MESSAGE TIME — Flash messages are status, warning, error, and information messages displayed in response to certain key presses during settings programming. These messages override any normal messages. Use this setting to change the duration of flash messages on the display.

DEFAULT MESSAGE TIMEOUT — If the keypad is inactive for a period of time, the relay automatically reverts to a default message. The inactivity time is modified using this setting to ensure that messages remain on the screen long enough during programming or reading of actual values.

DEFAULT MESSAGE INTENSITY — To extend phosphor life in the vacuum fluorescent display, the brightness can be attenuated during default message display. During keypad interrogation, the display always operates at full brightness.

SCREEN SAVER FEATURE and **SCREEN SAVER WAIT TIME** — These settings are only visible if the F60 has a liquid crystal display (LCD) and control its backlighting. When the **SCREEN SAVER FEATURE** is "Enabled," the LCD backlighting turns off after the **DEFAULT MESSAGE TIMEOUT** followed by the **SCREEN SAVER WAIT TIME**, provided that no keys have been pressed and no target messages are active. When a keypress occurs or a target becomes active, the LCD backlighting turns on.

CURRENT CUT-OFF LEVEL — This setting modifies the current cut-off threshold. Very low currents (1 to 2% of the rated value) are very susceptible to noise. Some customers prefer very low currents to display as zero, while others prefer the current to display even when the value reflects noise rather than the actual signal. The F60 applies a cut-off value to the magnitudes and angles of the measured currents. If the magnitude is below the cut-off level, it is substituted with zero. This applies to phase and ground current phasors as well as true RMS values and symmetrical components. The cut-off operation applies to quantities used for metering, protection, and control, as well as those used by communications protocols. Note that the cut-off level for the sensitive ground input is 10 times lower that the **CURRENT CUT-OFF LEVEL** setting value. Raw current samples available via oscillography are not subject to cut-off.

VOLTAGE CUT-OFF LEVEL — This setting modifies the voltage cut-off threshold. Very low secondary voltage measurements (at the fractional volt level) can be affected by noise. Some customers prefer these low voltages to be displayed as zero, while others prefer the voltage to be displayed even when the value reflects noise rather than the actual signal. The F60 applies a cut-off value to the magnitudes and angles of the measured voltages. If the magnitude is below the cut-off level, it is substituted with zero. This operation applies to phase and auxiliary voltages, and symmetrical components. The cut-off operation applies to quantities used for metering, protection, and control, as well as those used by communications protocols. Raw samples of the voltages available via oscillography are not subject to cut-off.

The **CURRENT CUT-OFF LEVEL** and the **VOLTAGE CUT-OFF LEVEL** are used to determine the metered power cut-off levels. The power cut-off level is calculated using the following equations. For Delta connections:

$$\text{3-phase power cut-off} = \frac{\sqrt{3} \times \textbf{CURRENT CUT-OFF LEVEL} \times \textbf{VOLTAGE CUT-OFF LEVEL} \times \text{VT primary} \times \text{CT primary}}{\text{VT secondary}} \quad \textbf{Eq. 5-3}$$

For Wye connections:

$$\text{3-phase power cut-off} = \frac{3 \times \textbf{CURRENT CUT-OFF LEVEL} \times \textbf{VOLTAGE CUT-OFF LEVEL} \times \text{VT primary} \times \text{CT primary}}{\text{VT secondary}} \quad \textbf{Eq. 5-4}$$

$$\text{per-phase power cut-off} = \frac{\textbf{CURRENT CUT-OFF LEVEL} \times \textbf{VOLTAGE CUT-OFF LEVEL} \times \text{VT primary} \times \text{CT primary}}{\text{VT secondary}} \quad \textbf{Eq. 5-5}$$

where VT primary = VT secondary × VT ratio and CT primary = CT secondary × CT ratio.

For example, given the following settings:

CURRENT CUT-OFF LEVEL: "0.02 pu"
VOLTAGE CUT-OFF LEVEL: "1.0 V"
PHASE CT PRIMARY: "100 A"
PHASE VT SECONDARY: "66.4 V"
PHASE VT RATIO: "208.00 : 1"
PHASE VT CONNECTION: "Delta"

We have:

CT primary = "100 A", and
VT primary = **PHASE VT SECONDARY** x **PHASE VT RATIO** = 66.4 V x 208 = 13811.2 V

The power cut-off is therefore:

power cut-off= (**CURRENT CUT-OFF LEVEL** × **VOLTAGE CUT-OFF LEVEL** × CT primary × VT primary)/VT secondary
= ($\sqrt{3}$ × 0.02 pu × 1.0 V × 100 A × 13811.2 V) / 66.4 V
= 720.5 watts

Any calculated power value below this cut-off does not display. As well, the three-phase energy data do not accumulate if the total power from all three phases does not exceed the power cut-off.

NOTE

Lower the **VOLTAGE CUT-OFF LEVEL** and **CURRENT CUT-OFF LEVEL** with care as the relay accepts lower signals as valid measurements. Unless dictated otherwise by a specific application, the default settings of "0.02 pu" for **CURRENT CUT-OFF LEVEL** and "1.0 V" for **VOLTAGE CUT-OFF LEVEL** are recommended.

5.3.3 Clear relay records

SETTINGS ⇨ PRODUCT SETUP ⇨⇩ CLEAR RELAY RECORDS

■ CLEAR RELAY ■ RECORDS	⇔	**CLEAR FAULT REPORTS:** **Off**	Range: FlexLogic operand
	⇳	**CLEAR EVENT RECORDS:** **Off**	Range: FlexLogic operand
	⇳	**CLEAR OSCILLOGRAPHY:** **Off**	Range: FlexLogic operand
	⇳	**CLEAR DATA LOGGER:** **Off**	Range: FlexLogic operand
	⇳	**CLEAR ARC AMPS 1:** **Off**	Range: FlexLogic operand
	⇳	**CLEAR ARC AMPS 2:** **Off**	Range: FlexLogic operand
	⇳	**CLEAR DEMAND:** **Off**	Range: FlexLogic operand
	⇳	**CLEAR ENERGY:** **Off**	Range: FlexLogic operand
	⇳	**CLEAR HIZ RECORDS:** **Off**	Range: FlexLogic operand

⇳	**RESET UNAUTH ACCESS:** **Off**	Range: FlexLogic operand
⇳	**CLEAR DIR I/O STATS:** **Off**	Range: FlexLogic operand Visible only for units with Direct I/O module

RESET UNAUTH ACCESS — Resets the access restriction counter.

Selected records can be cleared from user-programmable conditions with FlexLogic operands. Assigning user-programmable pushbuttons to clear specific records is a typical application for these commands. Since the F60 responds to rising edges of the configured FlexLogic operands, they must be asserted for at least 50 ms to take effect.

Clearing records with user-programmable operands is not protected by the command password. However, user-programmable pushbuttons are protected by the command password. Thus, if they are used to clear records, the user-programmable pushbuttons can provide extra security if required.

For example, to assign user-programmable pushbutton 1 to clear demand records, apply the following settings.

1. Assign the clear demand function to pushbutton 1 by making the following change in the **SETTINGS ⇨ PRODUCT SETUP ⇨⇩ CLEAR RELAY RECORDS** menu:

   CLEAR DEMAND: "PUSHBUTTON 1 ON"

2. Set the properties for user-programmable pushbutton 1 by making the following changes in the **SETTINGS ⇨ PRODUCT SETUP ⇨⇩ USER-PROGRAMMABLE PUSHBUTTONS ⇨ USER PUSHBUTTON 1** menu:

   PUSHBUTTON 1 FUNCTION: "Self-reset"
   PUSHBTN 1 DROP-OUT TIME: "0.20 s"

5

5.3.4 Communications

5.3.4.1 Menu

SETTINGS ⇨ PRODUCT SETUP ⇨⇩ COMMUNICATIONS

■ **COMMUNICATIONS** ■	⇔	■ **SERIAL PORTS** ■	See below
	⇳	■ **NETWORK** ■	See page 5-29
	⇳	■ **ROUTING** ■	See page 5-34
	⇳	■ **MODBUS PROTOCOL** ■	See page 5-37
	⇳	**PROTOCOL:** **DNP 3.0**	Range: DNP 3.0, IEC 60870-5-104, IEC 60870-5-103 See page 5-38
	⇳	■ **DNP PROTOCOL** ■	See page 5-38
	⇳	■ **DNP / IEC104** ■ **POINT LISTS**	See page 5-42
	⇳	■ **IEC 61850 PROTOCOL** ■	Access in EnerVista See page 5-43
	⇳	■ **WEB SERVER** ■ **HTTP PROTOCOL**	See page 5-74
	⇳	■ **TFTP PROTOCOL** ■	See page 5-75
	⇳	■ **IEC 60870-5-104** ■ **PROTOCOL**	See page 5-75

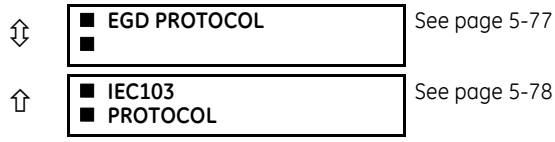

5.3.4.2 Serial ports

SETTINGS ⇨ PRODUCT SETUP ⇨⇩ COMMUNICATIONS ⇨ SERIAL PORTS

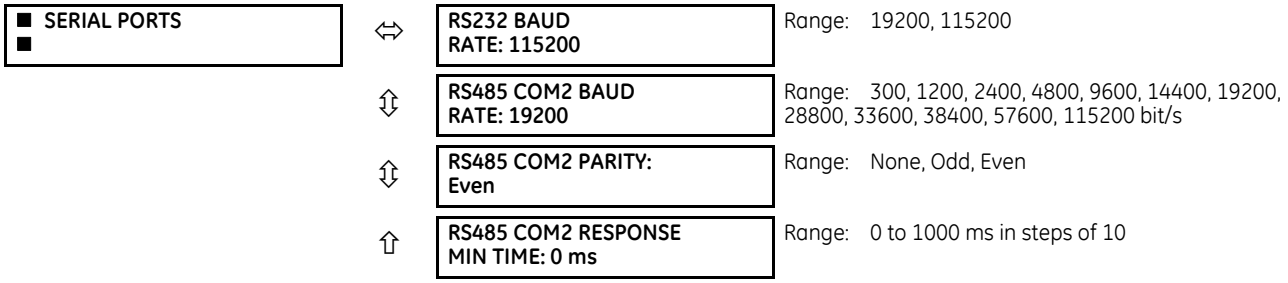

RS232 BAUD RATE, **RS485 COM2 BAUD RATE**, and **PARITY** — The F60 is equipped with two independent serial communication ports. The faceplate RS232 port is intended for local use and has two options for baud rate. The rear COM2 port is RS485 and has settings for baud rate and parity. It is important that these parameters agree with the settings used on the computer or other equipment that is connected to these ports. Any of these ports can be connected to a computer running the EnerVista software. This software can download and upload setting files, view measured parameters, and upgrade the relay firmware. A maximum of 32 relays can be daisy-chained and connected to a DCS, PLC, or computer using the RS485 ports. If IEC 60870-103 is chosen as the protocol, valid baud rates are 9600 and 19200 bit/s, and valid parity is Even.

RS485 COM2 RESPONSE MIN TIME — This setting specifies the minimum time before the rear RS485 port transmits after receiving data from a host. This feature allows operation with hosts that hold the RS485 transmitter active for some time after each transmission.

5.3.4.3 Ethernet network topology

The F60 has three Ethernet ports. Each Ethernet port must belong to a different network or subnetwork. Configure the IP address and subnet to ensure that each port meets this requirement. Two subnets are different when the bitwise AND operation performed between their respective IP address and mask produces a different result. Communication becomes unpredictable when more than one port is configured to the same subnet.

Example 1

IP1/Mask1: 10.1.1.2/255.255.255.0 (where LAN 1 is 10.1.1.x/255.255.255.0)

IP2/Mask2: 10.2.1.2/255.255.255.0 (where LAN2 is 10.2.1.x/255.255.255.0)

IP3/Mask3: 10.3.1.2/255.255.255.0 (where LAN3 is 10.3.1.x/255.255.255.0)

Example 2

IP1/Mask1: 10.1.1.2/255.0.0.0 (where LAN1 is 10.x.x.x/255.0.0.0)

IP2/Mask2: 11.1.1.2/255.0.0.0 (where LAN2 is 11.x.x.x/255.0.0.0)

IP3/Mask3: 12.1.1.2/255.0.0.0 (where LAN3 is 12.x.x.x/255.0.0.0)

Example 3 — Incorrect

IP1/Mask1: 10.1.1.2/255.0.0.0

IP2/Mask2: 10.2.1.2/255.0.0.0

IP3/Mask3: 10.3.1.2/255.0.0.0

This example is incorrect because the mask of 255.0.0.0 used for the three IP addresses makes them belong to the same network of 10.x.x.x.

Single LAN, no redundancy

The topology shown in the following figure allows communications to SCADA, local configuration/monitoring through EnerVista, and access to the public network shared on the same LAN. No redundancy is provided.

Figure 5-4: Network configuration for single LAN

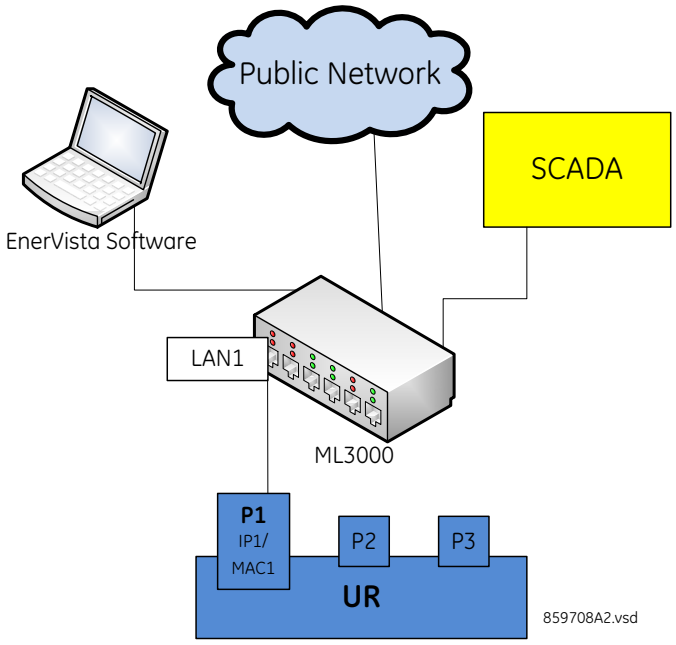

Multiple LANS, with redundancy

The following topology provides local configuration/monitoring through EnerVista software and access to the public network shared on LAN1, to which port 1 (P1) is connected. There is no redundancy provided on LAN1. Communications to SCADA is provided through LAN2. P2 and P3 are connected to LAN2, where P2 is the primary channel and P3 is the redundant channel. In this configuration, P3 uses the IP and MAC addresses of P2.

Figure 5-5: Multiple LANs, with redundancy

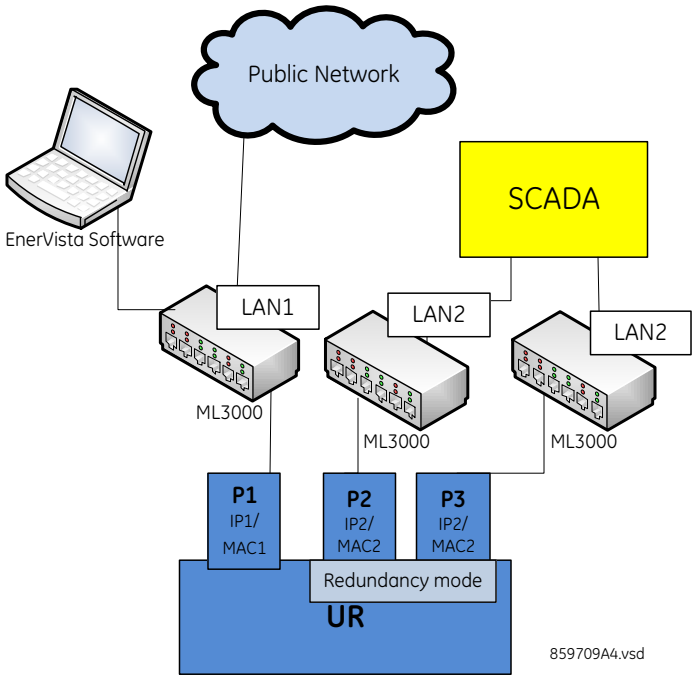

Multiple LANS, no redundancy

The following topology provides local configuration/monitoring through EnerVista software on LAN1, to which port 1 (P1) is connected, access to the public network on LAN2, to which port 2 (P2) is connected, and communications with SCADA on LAN3, to which port 3 (P3) is connected. There is no redundancy.

Figure 5-6: Multiple LANS, no redundancy

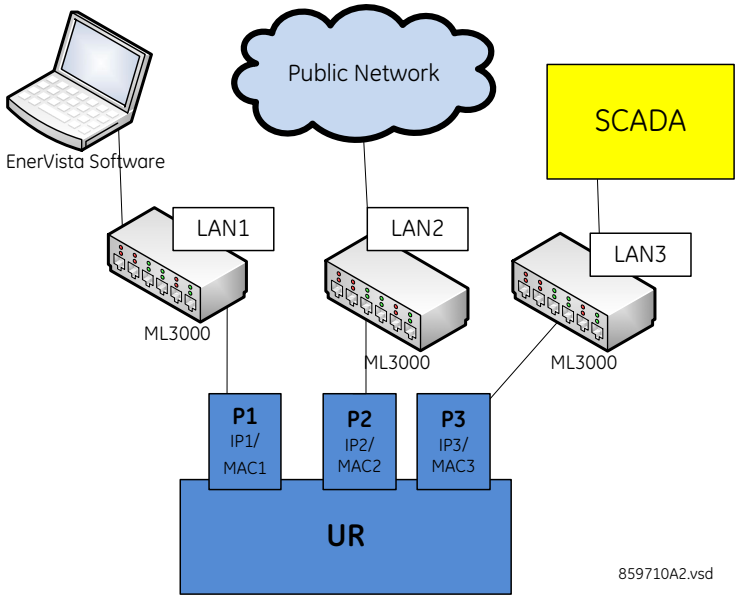

5.3.4.4 Network

As outlined in the previous section, when using more than one Ethernet port, configure each to belong to a different network or subnet using the IP addresses and mask. Configure the network IP and subnet settings before configuring the routing settings.

Follow the IP and subnet mask rules outlined in the Configuring the UR for Software Access section of the Installation chapter.

To obtain a list of all port numbers used, for example for audit purposes, contact GE technical support with substantiating information, such as the serial number and order code of your device.

SETTINGS ⇨ PRODUCT SETUP ⇨⇩ COMMUNICATIONS ⇨⇩ NETWORK 1(3)

■ NETWORK PORT 1 ■	⇔	PRT1 IP ADDRESS: 127.0.0.1	Range: standard IPV4 address format
	⇧	PRT1 SUBNET IP MASK: 255.0.0.0	Range: standard IPV4 address format
■ NETWORK PORT 2 ■	⇔	PRT2 IP ADDRESS: 127.0.0.1	Range: standard IPV4 address format
	⇧	PRT2 SUBNET IP MASK: 255.0.0.0	Range: standard IPV4 address format
	⇧	PRT2 REDUNDANCY: None	Range: None, Failover, PRP Range if no PRP license: None, Failover
	⇧	PRP MCST ADDR: 01-15-4E-00-01-00	Range: 01-15-4E-00-01-00 to 01-15-4E-00-01-FF
■ NETWORK PORT 3 ■	⇔	PRT3 IP ADDRESS: 127.0.0.1	Range: standard IPV4 address format
	⇧	PRT3 SUBNET IP MASK: 255.0.0.0	Range: standard IPV4 address format

The IP addresses are used with the DNP, Modbus/TCP, IEC 61580, IEC 60870-5-104, TFTP, HTTP, and PRP protocols. PRP is explained in its own section later.

Use the front panel to change these settings. When online, the EnerVista software can be used to enable/disable each port only. In the Offline Window area, all settings can be changed except port 2 redundancy.

PRT1 (2 or 3) IP ADDRESS — This setting sets the port's IPv4 address in standard IPV4 format. This setting is valid on port 3 if port 2 **REDUNDANCY** is set to None.

PRT1 (2 or 3) SUBNET MASK — This setting sets the port's IPv4 subnet mask in standard IPV4 format. This setting is valid on port 3 if port 2 **REDUNDANCY** is set to None.

PRT2 REDUNDANCY — Determines if ports 2 and 3 operate in redundant or independent mode. If the software options in the order code include PRP, the available options are None, Failover, and PRP. If the software options in the order code do not include PRP, the available options are None and Failover. In non-redundant mode (**REDUNDANCY** set to None), ports 2 and 3 operate independently with their own MAC, IP, and mask addresses. If **REDUNDANCY** is set to Failover, the operation of ports 2 and 3 is as follows:

- Ports 2 and 3 use the port 2 MAC address, IP address, and mask
- The configuration fields for IP address and mask on port 3 are hidden
- Port 3 is in standby mode and does not actively communicate on the Ethernet network but monitors its link to the Multilink switch. If port 2 detects a problem with the link, communications is switched to Port 3. Port 3 is, in effect, acting as a redundant or backup link to the network for port 2. Once port 2 detects that the link between itself and the switch is good and that communication is healthy for five minutes, then switching back to port 2 is performed. The delay in switching back ensures that rebooted switching devices connected to the F60, which signal their ports as

active prior to being completely functional, have time to completely initialize themselves and become active. Once port 2 is active again, port 3 returns to standby mode.

If **REDUNDANCY** is set to PRP, the operation of ports 2 and 3 is as follows:

- Ports 2 and 3 use the port 2 MAC address, IP address, and mask
- The configuration fields for IP address and mask on port 3 are overwritten with those from port 2. This is visible on the front panel but not displayed in the EnerVista software.
- Port 2 **MCST ADDRESS** field is visible
- The port 2 PTP function still uses only port 2 and the port 3 PTP function still uses only port 3. The relay still synchronizes to whichever port has the best master. When ports 2 and 3 see the same master, as is typically the case for PRP networks, the port with the better connectivity is used.

NOTE

The two ports must be connected to completely independent LANs with no single point of failure, such as common power supplies that feed switches on both LANs.

When **REDUNDANCY** is set to PRP or failover and the network path with resolved default gateway is broken, then the ARP table needs approximately five seconds to rebuild. The layer 2 protocols (GOOSE and PTP) are not affected. However, the TCP/IP or UDP protocols (MMS connections, DNP3.0, and so on) can require reconnection if their active connection does not ride through re-transmission frames.

For any changes to this setting to take effect, restart the unit.

PRP MCST ADDR — This setting allows the user to change the multicast address used by the PRP supervision frames. This setting is available if **REDUNDANCY** is set to PRP. All devices in the same PRP network need to have the same multicast address. Choose an address that does not conflict with another multicast protocol.

5.3.4.5 Far-End Fault Indication (FEFI)

Since 100BASE-FX does not support Auto-Negotiation, a Far-End Fault Indication (FEFI) feature is included since UR 7 that allows for detection of link failures.

The purpose of the Far-End Fault feature is to allow the stations on both ends of a pair of fibers to be informed when there is a problem with one of the fibers. Without the Far-End Fault feature, it is impossible for a fiber interface to detect a problem that affects only its transmit fiber.

When the Far-End Fault feature is supported, a loss of receive signal (link) causes the transmitter to generate a Far-End Fault pattern in order to inform the device at the far end of the fiber pair that a fault has occurred.

When the local receiver again detects a signal, the local transmitter automatically returns to normal operation.

If a Far-End Fault pattern is received by a fiber interface that supports the Far-End Fault feature and it is enabled, it reacts by dropping the link as if there were no signal at all.

If the receiving interface does not support the Far-End Fault feature or has it disabled, an incoming Far-End Fault pattern is ignored.

It is strongly recommended to have switches used for substation automation that support the Far-End Fault feature, especially when UR 7 redundancy Failover is selected for redundancy.

5.3.4.6 Parallel Redundancy Protocol (PRP)

SOFTWARE OPTION

The F60 is provided with optional PRP capability. This feature is specified as a software option at the time of ordering. See the Order Codes section in chapter 2 for details.

The Parallel Redundancy Protocol (PRP) defines a redundancy protocol for high availability in substation automation networks. It applies to networks based on Ethernet technology (ISO/IEC 8802-3) and is based on the second edition (July 2012) of IEC 62439-3, clause 4.

PRP is designed to provide seamless recovery in case of a single failure in the network, by using a combination of LAN duplication and frame duplication. Identical frames are sent on two completely independent networks that connect source and destination. Under normal circumstances both frames reach the destination and one of them is sent up the OSI stack to the destination application, while the second one is discarded. If an error occurs in one of the networks and traffic is prevented from flowing on that path, connectivity is provided through the other network to ensure continuous communication. Take care when designing the two LANs, so that no single point of failure (such as a common power supply) is encountered, as such scenarios can bring down both LANs simultaneously.

Figure 5-7: Example of parallel redundant network

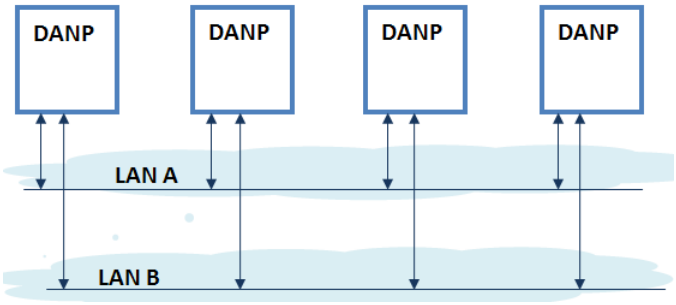

PRP uses specialized nodes called doubly attached nodes (DANPs) for handling the duplicated frames. DANP devices have an additional module, called a Link Redundancy Entity (LRE). LRE is responsible for duplicating frames and adding the specific PRP trailer when sending the frames out on the LAN, as well as making decisions on received frames as to which one is sent up the OSI stack to the application layer and which one is discarded. LRE is responsible for making PRP transparent to the higher layers of the stack.

In addition, there is a second type of specialized device used in PRP networks, called RedBox, with the role of connecting Single Attached Nodes (SANs) to a redundant network.

UR relays implement the DANP functionality. The RedBox functionality is not implemented.

The original standard IEC 62439-3 (2010) was amended to align PRP with the High-availability Seamless Redundancy (HSR) protocol. To achieve this, the original PRP was modified at the cost of losing compatibility with the PRP 2010 version. The revised standard IEC 62439-3 (2012) is commonly referred to as PRP-1, while the original standard is PRP-0. The UR relays support PRP-1.

The relay implements PRP on two of its Ethernet ports, specifically Ports 2 and 3 of the CPU module. Use the previous section (network port configuration) to configure PRP.

PRP is purchased as a separate option. If purchased (valid order code), PRP can be enabled in configuration through a setting available on the network configuration menu, REDUNDANCY, which already has the capability of enabling failover redundancy. The options on this setting must be changed to accommodate two types of redundancy: failover and PRP. When REDUNDANCY is set to either failover or PRP, the ports dedicated for PRP (Ports 2 and 3) operate in redundant mode. In this mode, Port 3 uses the MAC, IP address, and mask of Port 2.

5.3.4.7 Routing

SETTINGS ⇨ PRODUCT SETUP ⇨⇩ COMMUNICATIONS ⇨⇩ IPv4 ROUTE TABLE 1(6)

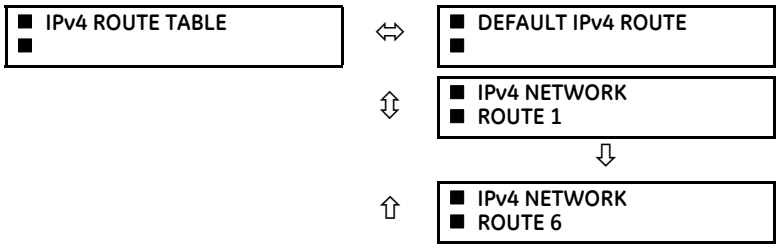

A default route and up to six static routes can be configured.

The default route is used as the last choice when no other route towards a given destination is found.

■ DEFAULT IPv4 ROUTE ■	⇔	GATEWAY ADDRESS: 127.0.0.1	Range: standard IPV4 unicast address format

■ IPv4 NETWORK ■ ROUTE 1	⇔	RT1 DESTINATION: 127.0.0.1	Range: standard IPV4 address format
	⇕	RT1 NET MASK: 255.0.0.0	Range: standard IPV4 subnet mask format
	⇧	RT1 GATEWAY: 127.0.0.1	Range: standard IPV4 unicast address format

Configure the network IP and subnet settings before configuring the routing settings.

Add and delete static routes

Host routes are not supported at present.

The routing table configuration is available on the serial port and front panel. This is a deliberate decision, to avoid loss of connectivity when remotely configuring the F60.

By default, the value of the destination field is 127.0.0.1 for all static routes (1 to 6). This is equivalent to saying that the static routes are not configured. When the destination address is 127.0.0.1, the mask and gateway also must be kept on default values.

By default, the value of the route gateway address is 127.0.0.1. This means that the default route is not configured.

To add a route:

1. Use any of the static network route entries numbered 1 to 6 to configure a static network route. Once a route destination is configured for any of the entries 1 to 6, that entry becomes a static route and it must meet all the rules listed in the next section, General Conditions to be Satisfied by Static Routes.
2. To configure the default route, enter a default gateway address. Once a default gateway address is configured, it must be validated against condition 2 of the General Conditions to be Satisfied by Static Routes, where the route gateway must be on a connected network.

To delete a route:

1. Replace the route destination with the default loopback address of 127.0.0.1. When deleting a route, the mask and gateway also must be brought back to default values.
2. Delete the default route by replacing the default gateway with the default value of 127.0.0.1.

General conditions to be satisfied by static routes

The following rules are validated internally:

- The route mask has IP mask format. In binary this needs to be a set of contiguous bits of 1 from left to right, followed by one or more contiguous bits of 0.
- The route destination and mask must match. This can be verified by checking that
  RtDestination and RtMask = RtDestination
  Example of good configuration: RtDestination = 10.1.1.0; Rt Mask = 255.255.255.0
  Example of bad configuration: RtDestination = 10.1.1.1; Rt Mask = 255.255.255.0

The following rules must be observed when you configure static routes:

- The route destination must not be a connected network
- The route gateway must be on a connected network. This rule applies to the gateway address of the default route as well. This can be verified by checking that:
  (RtGwy & Prt1Mask) == (Prt1IP & Prt1Mask) || (RtGwy & Prt2Mask) == (Prt2IP & Prt2Mask) || (RtGwy & Prt3Mask) == (Prt3IP & Prt3Mask)

  where

& is the bitwise-AND operator

== is the equality operator

|| is the logical OR operator

Routing behavior compared to previous releases

Prior to release 7.10, UR devices did not have an explicit manner of configuring routes. The only available route was the default route configured as part of the network settings (port gateway IP address). This limited the ability to route to specific destinations, particularly if these destinations were reachable through a different interface than the one on which the default gateway was.

Starting with UR 7.10, up to six static network routes can be configured in addition to a default route. The default route configuration was also moved from the network settings into the routing section.

The figure shows an example of topology that benefits from the addition of static routes.

Figure 5-8: Using static routes

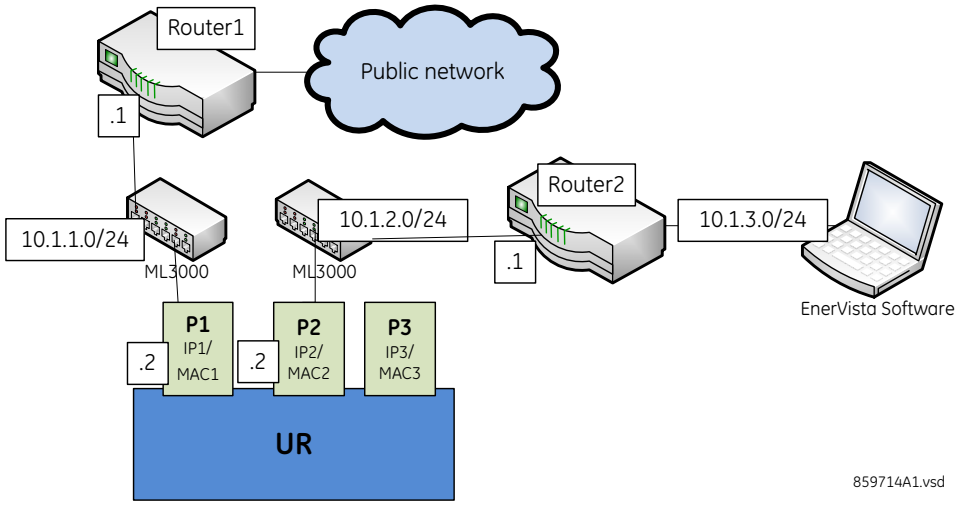

In the figure, the UR connects through the following two Ethernet ports:

- Port 1 (IP address 10.1.1.2) connects the UR to LAN 10.1.1.0/24 and to the Internet through Router1. Router1 has an interface on 10.1.1.0/24 and the IP address of this interface is 10.1.1.1.
- Port 2 (IP address 10.1.2.2) connects the UR to LAN 10.1.2.0/24 and to the EnerVista software through Router2. Router2 has an interface on 10.1.2.0/24 and the IP address of this interface is 10.1.2.1.

The configuration before release 7.10 was as follows:

- PRT1 IP ADDRESS = 10.1.1.2
  PRT1 SUBNET IP MASK = 255.255.255.0
  PRT1 GWY IP ADDRESS = 10.1.1.1
  PRT2 IP ADDRESS = 10.1.2.2
  PRT2 SUBNET IP MASK = 255.255.255.0

The behavior before release 7.10 was as follows. When sending packets to EnerVista, the UR noticed that the destination was not on a connected network and it tried to find a route to destination. Since the default route was the only route it knew, it used it. Yet EnerVista was on a private network, which was not reachable through Router1. Hence a destination unreachable message was received from the router.

The configuration starting with release 7.10 is as follows:

- PRT1 IP ADDRESS = 10.1.1.2
  PRT1 SUBNET IP MASK = 255.255.255.0
  PRT2 IP ADDRESS = 10.1.2.2
  PRT2 SUBNET IP MASK = 255.255.255.0

IPV4 DEFAULT ROUTE: GATEWAY ADDRESS = 10.1.1.1
STATIC NETWORK ROUTE 1: RT1 DESTINATION = 10.1.3.0/24; RT1 NET MASK = 255.255.255.0; and RT1 GATEWAY = 10.1.2.1

The behavior since release 7.10 is as follows. There is one added static network route to the destination 10.1.3.0/24, where a computer running EnerVista is located. This static route uses a different gateway (10.1.2.1) than the default route. This gateway is the address of Router2, which has knowledge about 10.1.3.0 and is able to route packets coming from the UR and destined to EnerVista.

Show routes and ARP tables

This feature is available on the Web interface, where the main menu contains an additional Communications menu and two submenus:

- Routing Table
- ARP Table

The tables outline the information displayed when the two submenus are selected.

Table 5-7: Routing table information

Field	Description
Destination	The IP address of the remote network to which this route points
Mask	The network mask for the destination
Gateway	The IP address of the next router to the remote network
Interface	Interface through which the specified network can be reached

Table 5-8: IP ARP information

Field	Description
IP Address	The network address that corresponds to Hardware Address
Age (min)	Age, in minutes, of the cache entry. A hyphen (-) means the address is local.
Hardware Address	LAN hardware address, a MAC address that corresponds to network address
Type	Dynamic or Static
Interface	Interface to which this address mapping has been assigned

5.3.4.8 Modbus protocol

SETTINGS ⇨ PRODUCT SETUP ⇨⇩ COMMUNICATIONS ⇨⇩ MODBUS PROTOCOL

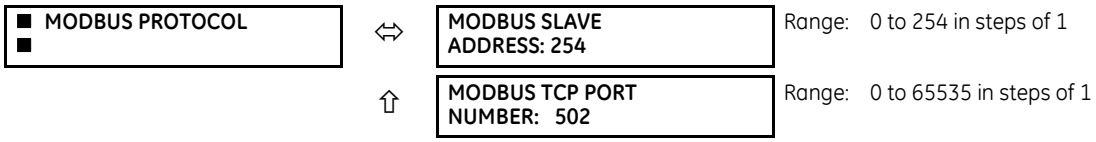

The serial communication ports utilize the Modbus protocol, unless the port is configured for DNP or IEC 60870-5-103 operation. This allows the EnerVista UR Setup software to be used on the port. UR devices operate as Modbus slave devices only.

For more information on the protocol, including the memory map table, see the UR Series Communications Guide.

MODBUS SLAVE ADDRESS — When using the Modbus protocol on the RS232 port, the F60 responds regardless of the **MODBUS SLAVE ADDRESS** programmed. For the RS485 port, each device on the serial bus must have a unique slave address from 1 to 254. Address 0 and addresses from 248 and up are reserved by the Modbus protocol specification, and so their use here is not recommended. Address 0 is the broadcast address to which all Modbus slave devices listen. When **MODBUS SLAVE ADDRESS** is set to 0, the F60 accepts broadcast messages, but in compliance with protocol specifications for broadcast messages, never replies. Addresses do not have to be sequential, but no two devices can have the same address or conflicts resulting in errors occur. Generally, starting at 1, set each device added to the link to use the next higher address. When using Modbus TCP/IP, the client must use the programmed **MODBUS SLAVE ADDRESS** value in the Unit Identifier field.

MODBUS TCP PORT NUMBER — Modbus over TCP/IP can also be used on any of the Ethernet ports. The listening TCP port 502 is reserved for Modbus communications, and only in exceptional cases when **MODBUS TCP PORT NUMBER** is set to any other port. The **MODBUS TCP PORT NUMBER** setting sets the TCP port used by Modbus on Ethernet. A **MODBUS TCP PORT NUMBER** of 0 disables Modbus over TCP/IP, meaning closes the Modbus TCP port. When the port number is changed to 0, the change takes effect when the F60 is restarted. When it is set to 0, use the front panel or serial port to communicate with the relay.

NOTE

Do not set more than one protocol to the same TCP/UDP port number, as this results in unreliable operation of those protocols.

5.3.4.9 Protocol selection

The **PROTOCOL** menu setting allows selection of one of the following protocols: DNP 3.0, IEC60870-104, or IEC60870-103. For any change to take effect, restart the unit.

The table shows which of DNP 3.0, IEC 60870-5-104, IEC 60870-5-103, and IEC 61850 protocols are operational on the RS232, RS485, and Ethernet ports. It shows all possible combinations of the **PROTOCOL** and **DNP CHANNEL 1(2) PORT** settings.

Table 5-9: Port and protocol combinations

PROTOCOL setting	DNP CHANNEL 1(2) PORT settings	RS232	RS485	Ethernet
DNP	Channel 1: Eth TCP Channel 2: Eth TCP	Modbus	Modbus	DNP, Modbus, IEC 61850
	Channel 1: Eth TCP Channel 2: none	Modbus	Modbus	DNP, Modbus, IEC 61850
	Channel 1: none Channel 2: Eth TCP	Modbus	Modbus	DNP, Modbus, IEC 61850
	Channel 1: Eth UDP Channel 2: none	Modbus	Modbus	DNP, Modbus, IEC 61850
	Channel 1: Eth TCP Channel 2: RS485	Modbus	DNP	DNP, Modbus, IEC 61850
	Channel 1: Eth TCP Channel 2: RS232	DNP	Modbus	DNP, Modbus, IEC 61850
	Channel 1: Eth UDP Channel 2: RS485	Modbus	DNP	DNP, Modbus, IEC 61850
	Channel 1: Eth UDP Channel 2: RS232	DNP	Modbus	DNP, Modbus, IEC 61850
	Channel 1: RS485 Channel 2: Eth TCP	Modbus	DNP	DNP, Modbus, IEC 61850
	Channel 1: RS232 Channel 2: Eth TCP	DNP	Modbus	DNP, Modbus, IEC 61850
	Channel 1: RS485 Channel 2: RS232	DNP	DNP	Modbus, IEC 61850
	Channel 1: RS232 Channel 2: RS485	DNP	DNP	Modbus, IEC 61850
	Channel 1: RS485 Channel 2: none	Modbus	DNP	Modbus, IEC 61850
IEC 104		Modbus	Modbus	IEC 104, Modbus, IEC 61850
IEC 103		Modbus	IEC 103	Modbus, IEC 61850

5.3.4.10 DNP protocol

SETTINGS ⇨ PRODUCT SETUP ⇨⇩ COMMUNICATIONS ⇨⇩ DNP PROTOCOL

■ **DNP PROTOCOL** ■	⇔	■ **DNP CHANNELS** ■	See below

DNP ADDRESS: 1	Range: 0 to 65535 in steps of 1
■ **DNP NETWORK CLIENT ADDRESSES**	See below
DNP TCP/UDP PORT NUMBER: 20000	Range: 0 to 65535 in steps of 1
DNP UNSOL RESPONSE FUNCTION: Disabled	Range: Enabled, Disabled
DNP UNSOL RESPONSE TIMEOUT: 5 s	Range: 0 to 60 s in steps of 1
DNP UNSOL RESPONSE MAX RETRIES: 10	Range: 1 to 255 in steps of 1
DNP UNSOL RESPONSE DEST ADDRESS: 1	Range: 0 to 65519 in steps of 1
DNP CURRENT SCALE FACTOR: 1	Range: 0.001, 0.01. 0.1, 1, 10, 100, 1000, 10000, 100000
DNP VOLTAGE SCALE FACTOR: 1	Range: 0.001, 0.01. 0.1, 1, 10, 100, 1000, 10000, 100000
DNP POWER SCALE FACTOR: 1	Range: 0.001, 0.01. 0.1, 1, 10, 100, 1000, 10000, 100000
DNP ENERGY SCALE FACTOR: 1	Range: 0.001, 0.01. 0.1, 1, 10, 100, 1000, 10000, 100000
DNP PF SCALE FACTOR: 1	Range: 0.001, 0.01. 0.1, 1, 10, 100, 1000, 10000, 100000
DNP OTHER SCALE FACTOR: 1	Range: 0 to 100000000 in steps of 1
DNP CURRENT DEFAULT DEADBAND: 30000	Range: 0 to 100000000 in steps of 1
DNP VOLTAGE DEFAULT DEADBAND: 30000	Range: 0 to 100000000 in steps of 1
DNP POWER DEFAULT DEADBAND: 30000	Range: 0 to 100000000 in steps of 1
DNP ENERGY DEFAULT DEADBAND: 30000	Range: 0 to 100000000 in steps of 1
DNP PF DEFAULT DEADBAND: 30000	Range: 0 to 100000000 in steps of 1
DNP OTHER DEFAULT DEADBAND: 30000	Range: 0 to 100000000 in steps of 1
DNP TIME SYNC IIN PERIOD: 1440 min	Range: 1 to 10080 min. in steps of 1
DNP MESSAGE FRAGMENT SIZE: 240	Range: 30 to 2048 in steps of 1
DNP OBJECT 1 DEFAULT VARIATION: 2	Range: 1, 2
DNP OBJECT 2 DEFAULT VARIATION: 2	Range: 1, 2, 3
DNP OBJECT 20 DEFAULT VARIATION: 1	Range: 1, 2, 5, 6

⇳	**DNP OBJECT 21 DEFAULT VARIATION: 1**	Range: 1, 2, 9, 10
⇳	**DNP OBJECT 22 DEFAULT VARIATION: 1**	Range: 1, 2, 5, 6
⇳	**DNP OBJECT 23 DEFAULT VARIATION: 1**	Range: 1, 2, 5, 6
⇳	**DNP OBJECT 30 DEFAULT VARIATION: 1**	Range: 1, 2, 3, 4, 5
⇳	**DNP OBJECT 32 DEFAULT VARIATION: 1**	Range: 1, 2, 3, 4, 5, 7
⇳	**DNP NUMBER OF PAIRED CONTROL POINTS: 0**	Range: 0 to 32 in steps of 1
⇧	**DNP TCP CONNECTION TIMEOUT: 120 s**	Range: 10 to 7200 s in steps of 1

The Distributed Network Protocol (DNP) allows for the optimization of control and data acquisition between the equipment in the substation and the central control center. The protocol is scalable; that is, it is designed to be compatible with the latest high speed LAN technology yet still be implemented over slower speed serial links.

The DNP improves upon many master-slave protocols by improving overall communication performance requirements and provides time-stamping with millisecond accuracy.

The F60 supports the Distributed Network Protocol (DNP) version 3.0. DNP is enabled when the **SETTINGS ⇨ PRODUCT SETUP ⇨⇩ COMMUNICATIONS ⇨ PROTOCOL** setting is set to DNP 3.0. The F60 can be used as a DNP slave device connected to multiple DNP masters (usually an RTU or a SCADA master station). Since the F60 maintains two sets of DNP data change buffers and connection information, two DNP masters can actively communicate with the F60 at one time.

See the UR Series Communications Guide for more information on DNP.

NOTE For any change to DNP settings, restart the relay.

The DNP Channels sub-menu is shown.

SETTINGS ⇨ PRODUCT SETUP ⇨⇩ COMMUNICATIONS ⇨⇩ DNP PROTOCOL ⇨ DNP CHANNELS

■ **DNP CHANNELS** ■	⇔	**DNP CHANNEL 1 PORT: NONE**	Range: NONE, COM2 - RS485, FRONT PANEL - RS232, NETWORK - TCP, NETWORK - UDP
	⇧	**DNP CHANNEL 2 PORT: NONE**	Range: NONE, COM2 - RS485, FRONT PANEL - RS232, NETWORK - TCP

The **DNP CHANNEL 1 PORT** and **DNP CHANNEL 2 PORT** settings select the communications port assigned to the DNP protocol for each channel. Once DNP is assigned to a serial port, DNP is the only protocol running on that port; Modbus or IEC 60870-5-103 are disabled. If DNP is assigned to RS485, the protocol must be set to DNP on the serial port configuration as well, for the change to take effect. When the **DNP CHANNEL 1(2) PORT** setting is set to "Network - TCP," the channel 1(2) DNP protocol can be used over TCP/IP on the Ethernet ports. When this value is set to "Network - UDP," the DNP protocol can be used over UDP/IP on channel 1 only.

NOTE Do not set more than one protocol to the same TCP/UDP port number, as this results in unreliable operation of those protocols.

The **DNP ADDRESS** setting is the DNP slave address. This number identifies the F60 on a DNP communications link. Assign a unique address to each DNP slave.

The F60 can specify a maximum of five clients for its DNP connections. These are IP addresses for the controllers to which the F60 can connect. The settings follow.

SETTINGS ⇨ PRODUCT SETUP ⇨⇩ COMMUNICATIONS ⇨⇩ DNP PROTOCOL ⇨ DNP NETWORK CLIENT ADDRESSES

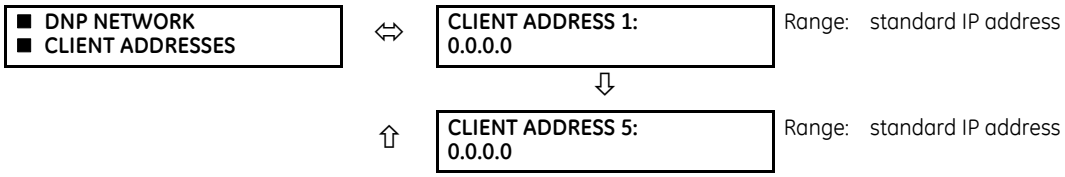

The **DNP TCP/UDP PORT NUMBER** setting is for normal DNP operation. To close the port, set the port number to 0.

The **DNP UNSOL RESPONSE FUNCTION** is set to "Disabled" for RS485 applications since there is no collision avoidance mechanism. The **DNP UNSOL RESPONSE TIMEOUT** sets the time the F60 waits for a DNP master to confirm an unsolicited response. The **DNP UNSOL RESPONSE MAX RETRIES** setting determines the number of times the F60 retransmits an unsolicited response without receiving confirmation from the master; a value of "255" allows infinite re-tries. The **DNP UNSOL RESPONSE DEST ADDRESS** is the DNP address to which all unsolicited responses are sent. The IP address to which solicited responses are sent is determined by the F60 from the current TCP connection or the most recent UDP message.

The DNP scale factor settings are numbers used to scale analog input point values. These settings group the F60 analog input data into the following types: current, voltage, power, energy, power factor, and other. Each setting represents the scale factor for all analog input points of that type. For example, if the **DNP VOLTAGE SCALE FACTOR** setting is set to "1000," all DNP analog input points that are voltages are returned with values 1000 times smaller (for example, a value of 72000 V on the F60 is returned as 72). These settings are useful when analog input values must be adjusted to fit within certain ranges in DNP masters. Note that a scale factor of 0.1 is equivalent to a multiplier of 10 (that is, the value is 10 times larger).

The **DNP DEFAULT DEADBAND** settings determine when to trigger unsolicited responses containing analog input data. These settings group the F60 analog input data into the following types: current, voltage, power, energy, power factor, and other. Each setting represents the default deadband value for all analog input points of that type. For example, to trigger unsolicited responses from the F60 when any current values change by 15 A, the **DNP CURRENT DEFAULT DEADBAND** setting is set to "15." Note that these settings are the deadband default values. DNP object 34 points can be used to change deadband values, from the default, for each individual DNP analog input point.

The **DNP TIME SYNC IIN PERIOD** setting determines how often the Need Time Internal Indication (IIN) bit is set by the F60. Changing this time allows the DNP master to send time synchronization commands more or less often, as required.

The **DNP MESSAGE FRAGMENT SIZE** setting determines the size, in bytes, at which message fragmentation occurs. Large fragment sizes allow for more efficient throughput; smaller fragment sizes cause more application layer confirmations to be necessary, which provides more robust data transfer over noisy communication channels.

NOTE

Check the "DNP Points Lists" F60 web page to view the analog inputs and/or binary inputs points lists. This page can be viewed with a web browser by entering the IP address of the F60 Ethernet port employed to access the F60 Main Menu, then by clicking the **Device Information Menu** item, then the **DNP Points Lists** item.

The **DNP OBJECT 1 DEFAULT VARIATION** to **DNP OBJECT 32 DEFAULT VARIATION** settings select the DNP default variation number for object types 1, 2, 20, 21, 22, 23, 30, and 32. The default variation refers to the variation response when variation 0 is requested and/or in class 0, 1, 2, or 3 scans. See the DNP Implementation section in the UR Series Communications Guide.

The DNP binary outputs typically map one-to-one to IED data points. That is, each DNP binary output controls a single physical or virtual control point in an IED. In the F60 relay, DNP binary outputs are mapped to virtual inputs. However, some legacy DNP implementations use a mapping of one DNP binary output to two physical or virtual control points to support the concept of trip/close (for circuit breakers) or raise/lower (for tap changers) using a single control point. That is, the DNP master can operate a single point for both trip and close, or raise and lower, operations. The F60 can be configured to support paired control points, with each paired control point operating two virtual inputs. The **DNP NUMBER OF PAIRED CONTROL POINTS** setting allows configuration of 0 to 32 binary output paired controls. Points not configured as paired operate on a one-to-one basis.

The **DNP TCP CONNECTION TIMEOUT** setting specifies a time delay for the detection of dead network TCP connections. If there is no data traffic on a DNP TCP connection for greater than the time specified by this setting, the connection is aborted by the F60. This frees up the connection to be re-used by a client.

NOTE

For any change to DNP settings, restart the relay.

5.3.4.11 DNP / IEC 60870-5-104 point lists

SETTINGS ⇨ PRODUCT SETUP ⇨⇩ COMMUNICATIONS ⇨⇩ DNP / IEC104 POINT LISTS

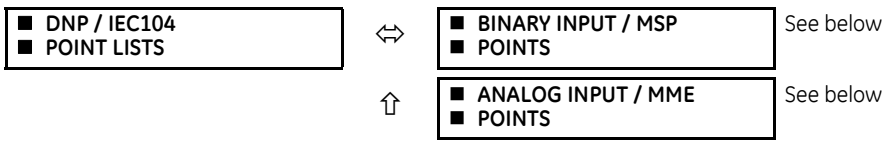

Up to 256 binary and up to 256 analog input points for the DNP protocol, or the MSP and MME points for IEC 60870-5-104 protocol, can be configured. The value for each point is user-programmable and can be configured by assigning FlexLogic operands for binary inputs / MSP points or FlexAnalog parameters for analog inputs / MME points.

The menu for the binary input points (DNP) or MSP points (IEC 60870-5-104) follows.

SETTINGS ⇨ PRODUCT SETUP ⇨⇩ COMMUNICATIONS ⇨⇩ DNP / IEC104 POINT LISTS ⇨ BINARY INPUT / MSP POINTS

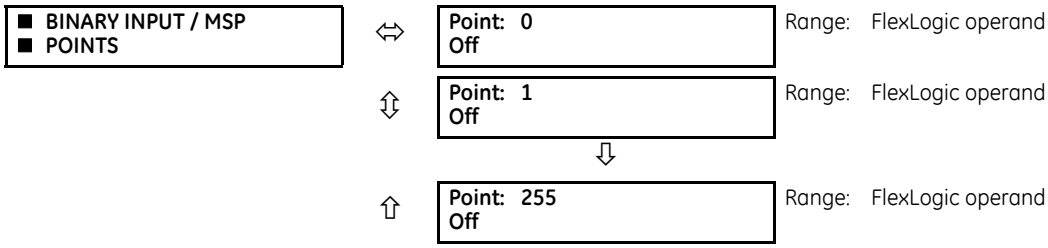

Up to 256 binary input points can be configured for the DNP or IEC 60870-5-104 protocols. The points are configured by assigning an appropriate FlexLogic operand. See the Introduction to FlexLogic section in this chapter for the range of assignable operands.

Changes to the DNP / IEC 60870-5-104 point lists take effect when the F60 is restarted.

The menu for the analog input points (DNP) or MME points (IEC 60870-5-104) follows.

SETTINGS ⇨ PRODUCT SETUP ⇨⇩ COMMUNICATIONS ⇨⇩ DNP / IEC104 POINT LISTS ⇨⇩ ANALOG INPUT / MME POINTS

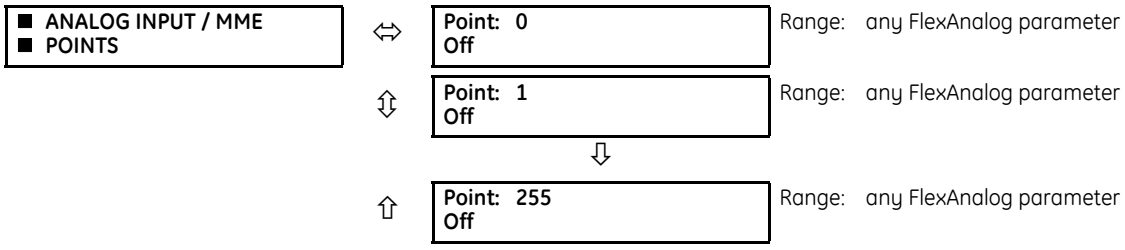

Up to 256 analog input points can be configured for the DNP or IEC 60870-5-104 protocols. The analog point list is configured by assigning an appropriate FlexAnalog parameter to each point. See the FlexAnalog Parameters section in Appendix A for the range of assignable parameters.

Changes to the DNP / IEC 60870-5-104 point lists take effect when the F60 is restarted.

NOTE

The DNP / IEC 60870-5-104 point lists always begin with point 0 and end at the first "Off" value. Since DNP / IEC 60870-5-104 point lists must be in one continuous block, any points assigned after the first "Off" point are ignored.

5.3.4.12 IEC 61850 protocol

The F60 is provided with optional IEC 61850 communications capability. This feature is specified as a software option at the time of ordering. See the Order Codes section in chapter 2 for details.

The IEC 61850 settings are accessible in EnerVista software or a substation configuration language (SCL) generating tool. The path is **Settings > Product Setup > Communications > IEC 61850**. The settings are not accessible from the front panel of the device.

NOTE

IEC 61850 messaging can form part of protection schemes. Consider IEC 61850 settings with the same criticality as protection element settings. To ensure reliable performance of protection schemes utilizing IEC 61850 messaging, route IEC 61850 traffic on a separate port from SCADA communications, or use redundant, independent ports, and a high speed network recovery method, such as PRP.

Overview

IEC 61850 is a series of international standards and technical reports applicable to power utility automation systems. It includes semantics, abstract communication services, specific communication services, performance specifications, network engineering guidelines, configuration description methodologies, and engineering processes. The standard enables interoperability among intelligent electronic devices (IEDs) from different suppliers and interoperability among software configuration tools from different suppliers. Interoperability in this case is the ability for IEDs to operate on the same network or communication path sharing information and commands, and for configuration tools to understand each other's configuration files.

The UR series supports a large subset of IEC 61850 features. These are detailed in the UR Series Communications Guide and include the information model, GOOSE publish, GOOSE subscribe, buffered report server, unbuffered report server, and Manufacturing Message Specification (MMS) query, read, write, and control services. In addition, the UR and EnerVista UR Setup software support IEC 61850 Substation Configuration Language (SCL) file import/export.

Whereas prior UR releases used edition 1.0 of IEC 61850, this release uses edition 2.0, with certain modifications according to IEC/TR 61850-90-5. Only edition 2.0 61850 configuration tools can interoperate with edition 2.0 devices such as the UR 7.3x release. The UR release uses edition 2.0 SCL, which differs from edition 1.0 SCL. GSSE, fixed GOOSE, and fixed report services of previous releases are no longer supported, and thus UR devices of previous releases using these features have to be converted to configurable GOOSE to communicate with a 7.3x device.

Many settings of UR protection, control, and monitoring elements, that is to say elements that are not concerned with the IEC 61850 protocol, can nevertheless be accessed via IEC 61850. These settings are documented elsewhere in this Settings chapter. This section of the Settings chapter deals solely with the settings that configure the IEC 61850 protocol itself.

The maximum number of simultaneous clients supported by the UR series is five.

EnerVista setup for IEC 61850

The EnerVista UR Setup software provides the interface to configure F60 settings for the IEC 61850 protocol. This section describes this interface. The software also supports import and export of IEC 61850 Substation Configuration Language (SCL) files as documented in the UR Series Communications Guide.

Unlike other UR settings, IEC 61850 protocol configuration settings cannot be accessed through the UR front panel. These settings are accessible with the EnerVista software, via MMS query, read, and write services, or via 61850 Substation Configuration Language (SCL) file transfer. Accordingly, whereas other settings are presented in this manual as they appear on the front panel, IEC 61850 settings are presented as they appear in the software. See the UR Series

Communications Guide for MMS and SCL access. Note that if you update the IEC 61850 settings in the EnerVista software by writing to them by MMS while the corresponding IEC 61850 panel is open in EnerVista, you need to close then open the panel in EnerVista for the correct readings to display.

All IEC 61850 protocol configuration settings are accessed through software panels that are selected either in the **Online Window** area (see figure) or the **Offline Window** area in the EnerVista software.

The EnerVista software also includes an interface that is compatible with firmware versions 5.0 to 7.2 to configure subscribers. Use the Simplified GOOSE Configurator in the Offline Window area.

Figure 5-9: IEC 61850 protocol panel in EnerVista software

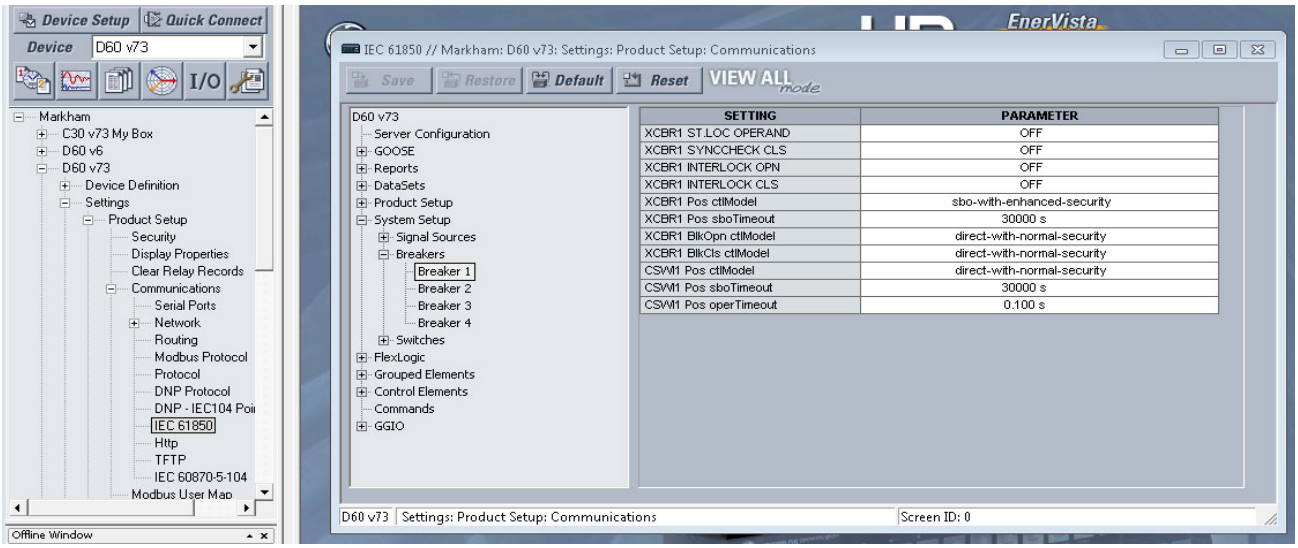

The IEC 61850 window is divided into a navigation pane on the left and a settings panel on the right. You expand and click an option on the left to display its panel on the right. The following figure shows an example for Server Configuration. The setting entry panel contains in the **SETTING** column the names of the settings, and the settings entry boxes are in the **PARAMETER** column. Hovering the mouse over a setting name displays a tool-tip showing the 61850 information model name of the setting or its location in SCL files.

Figure 5-10: Main IEC 61850 panel

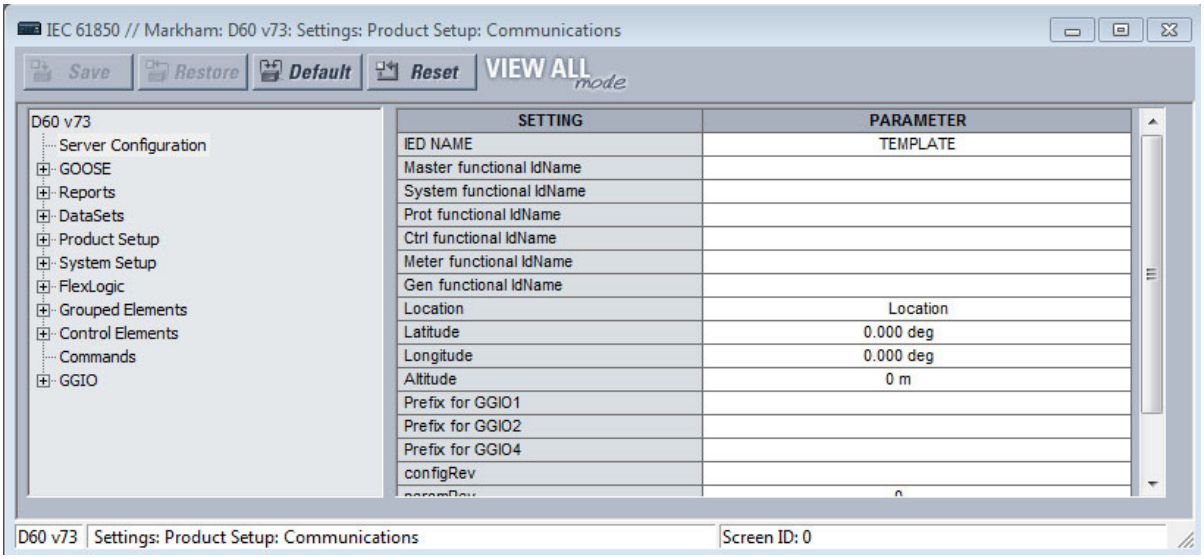

Opening the IEC 61850 window while online causes the UR Setup software to retrieve and import an SCL file from the connected F60. This SCD file contains all the settings in the UR at the time of the file request, both those that are mapped into the IEC 61850 information model (that is, the "public" sections) and those that are not in the model (that is, the "private" section). The UR Setup software imports all of these settings into the current session, not just those in the IEC 61850 window. To avoid loss of any unsaved setting changes made in other panels during the current session, all other panels for the F60 must be closed before the IEC 61850 panel can be opened; the software prompts for this when applicable. Panels for other devices can be open concurrently to facilitate parameter coordination.

When CyberSentry is enabled, editable settings depend on role logged in. For example, an Administrator and Engineer can change settings. If prompted for a "Settings password," it means Administrator or Engineer password.

The **Restore** button restores settings in the window to their last saved values. The **Default** button reverts settings in the window to factory default values or Oscillography, Data Logger, or FlexLogic Equation Editor pre-configured values. The **Reset** button reverts all IEC 61850 settings to the factory default values, not just the current window. (In other settings windows, the button reverts settings in the window to factory default values.)

Create CID and settings files

When the **Save** button in the online IEC 61850 window is clicked, UR Setup software prepares a configured IED description (CID) file containing all the device's settings and sends the CID file to the connected F60. On receipt of a CID file, the F60 checks it for correctness, and if no error is found, reboots using the settings in the CID file. UR Setup displays a message when the F60 is running the new settings, confirming successful transfer. This process can take a minute or so due to the extensive amount of processing required by the software and the F60.

Certain settings not related to IEC 61850 are indicated in this manual as taking effect only when the device is restarted. The reboot following CID file transfer described in the previous paragraph does not make these setting changes take effect, as the F60 does not accept the setting change until after the CID file transfer reboot. For any change in the indicated settings to take effect, after the automatic restart due to CID file transfer, you must perform a manual restart, for example by executing the **Maintenance > Reboot Relay Command** in the software.

When the **Save** button in the offline IEC 61850 window is clicked, UR Setup software saves to local storage, for example the hard drive, a .urs file containing all of the device's settings.

Server configuration

The Server Configuration panel contains IEC 61850 settings relevant to the server functions of the IED implementation.

The path is **Settings > Product Setup > Communications > IEC 61850 > Server Configuration**.

The following settings are available, where <iedName> is a syntactic variable representing the present value of the IED NAME setting.

IED NAME

Range: 1 to 58 VisibleString characters
Default: TEMPLATE

The value entered sets the IED name used by IEC 61850 for the F60. An IED name unique within the network must be entered for proper operation. Valid characters are upper and lowercase letters, digits, and the underscore (_) character. The first character must be a letter.

The **IED NAME** and the **Product LD inst name** comprise the <LDName> for a product. LD inst are fixed, with the longest being "Master" and "System" at six characters. So the IED NAME needs to be restricted to 58 characters to meet a 64 character limit.

Master functional ldName

Range: 0 to 64 VisibileString characters
Default:

The Master logical device contains the UR logical nodes modelling communications and setting group control. Valid characters are upper and lowercase letters, digits, and the underscore (_) character. If the number of characters entered is greater than zero, this setting sets the name used in communications for the Master logical device. If an ldName is entered, a name unique within the network must be entered for proper operation. The standard recommends choosing this name according to IEC 81346-1. If the number of characters entered is zero, the name used in communications for the Master logical device is "<iedName>Master", where <iedName> is the value of setting **IED NAME** described earlier.

NOTE

Throughout the remainder of this section, <LDName> is a syntactic variable representing the present name of the master logical device. Depending on its context, <LDName> can be a product-related name or a function-related name. In SCL files, <LDName> is always the product-related name. In IEC 61850 messages, <LDName> is the function-related name if one is set by the Master functional ldName setting, otherwise <LDName> is again the product-related name. The product-related name of the Master logical device is "<iedName>Master". The function related name of the Master logical device is the value of the Master functional ldName setting.

System functional ldName

Range: 0 to 64 VisibileString characters
Default:

This setting is similar to setting **Master functional ldName**, but is for the System logical device, which contains the UR logical nodes modelling power system devices: breakers, switches, CTs, VTs, and so on, including interface to these such as AC inputs, contact I/O, transducer I/O, and HardFiber I/O.

Prot functional ldName

Range: 0 to 64 VisibileString characters
Default:

This setting is similar to setting **Master functional ldName**, but is for the Prot logical device instance, which contains the UR logical nodes modelling protection and protection related functions.

Ctrl functional ldName

Range: 0 to 64 VisibileString characters
Default:

This setting is similar to setting **Master functional ldName**, but is for the Ctrl logical device instance, which contains the UR logical nodes modelling control and monitoring functions.

Meter functional ldName

Range: 0 to 64 VisibileString characters
Default:

This setting is similar to setting **Master functional ldName**, but is for Meter the logical device instance, which contains the UR logical nodes modelling metering and measurement (other than PMU), including Signal Sources.

Gen functional ldName

Range: 0 to 64 VisibileString characters
Default:

This setting is similar to setting **Master functional ldName**, but is for the Gen logical device instance, which contains the UR logical nodes modelling FlexLogic, Virtual Outputs, non-volatile latches, FlexElements, recording (for example oscillography), security, front panel, and clock.

Location

Range: 0 to 255 ASCII characters
Default: Location

The value entered sets the value of the data attribute <LDName>/LPHD1.PhyNam.location. This data attribute is provided by the protocol to allow the user to declare where the equipment is installed.

Latitude

Range: -90.000 to 90.000 degrees in steps of 0.001 degree
Default: 0.000 deg

The value entered sets the value of the data attribute <LDName>/LPHD1.PhyNam.latitude. This data attribute is provided by the protocol to allow the user to declare the geographical position of the device in WGS84 coordinates -latitude. Negative values indicate a southern latitude. WGS refers to the world geodetic system, which is used in global positioning systems (GPS), and 84 is the current version of the standard.

Longitude

Range: -180.000 to 180.000 degrees in steps of 0.001 degree
Default: 0.000 deg

The value entered sets the value of the data attribute <LDName>/LPHD1.PhyNam.longitude. This data attribute is provided by the protocol to allow the user to declare the geographical position of the device in WGS84 coordinates - longitude. Negative values indicate a western longitude.

Altitude

Range: 0 to 10,0000 m in steps of 1 m
Default: 0 m

The value entered sets the value of the data attribute <LDName>/LPHD1.PhyNam.altitude. This data attribute is provided by the protocol to allow the user to declare the geographical position of the device in WGS84 coordinates - altitude.

Prefix for GGIO1

Range for Edition 2: 0 to 11 VisibleString characters
Range for Edition 1: 0 to 6 VisibleString characters
Default:

This setting sets the LN Prefix of the logical node GGIO1 that is described in the GGIO1 section later. Valid characters are upper and lowercase letters, digits, and the underscore (_) character. The first character must be a letter.

Prefix for GGIO2

Range for Edition 2: 0 to 11 VisibleString characters
Range for Edition 1: 0 to 6 VisibleString characters
Default:

This setting sets the LN Prefix of logical node GGIO2 that is described in the GGIO2 section later. Valid characters are upper and lowercase letters, digits, and the underscore (_) character. The first character must be a letter.

Prefix for GGIO4

Range for Edition 2: 0 to 11 VisibleString characters
Range for Edition 1: 0 to 6 VisibleString characters
Default:

This setting sets the LN Prefix of logical node GGIO4 that is described in the GGIO4 section later. Valid characters are upper and lowercase letters, digits, and the underscore (_) character. The first character must be a letter.

Master configRev

Range: 0 to 255 ASCII characters
Default:

This data attribute is provided by the protocol to allow the user to declare changes to the semantic of the data model of the UR. The intent is that the user changes Master configRev each time that the semantic or data model changes, so that clients can readily detect the change. A semantic change is a logical node getting a new semantic use; for example, an instance of logical node CSWI is now serving a different physical switch, or an instance of a logical node PDIS is now used for another zone. A data model change is a change in the presence of logical nodes, data objects, data attributes, or instance names.

The scope of Maser configRev is the entire relay configuration as the Master logical device is the root logical device. Similar settings are provided for the other logical nodes; the scope of these other configRev settings is limited to the corresponding logical device configuration.

paramRev

Range: -2,147,483,648 to 2,147,483,647 in steps of 1
Default: 0

This data attribute is provided by the protocol to make changes to the settings of the F60 apparent to clients. The Substation Configuration Tool and UR Setup software advance the value of paramRev each time any setting changes. The F60 increments the value of parmRev when a setting change is made other than through CID file download.

LLN0.Mod.ctlModel

Range: status-only, direct-with-normal-security, sbo-with-normal-security

Default: sbo-with-normal-security

This setting specifies the control service that clients must use to control the TEST MODE FUNCTION of the F60. An "on" control to <LDName>/LLN0.Mod changes TEST MODE FUNCTION to Disabled, an "on-blocked" control changes it to Forcible, and a "test/blocked" changes it to Isolated.

IEC/MMS TCP PORT NUMBER

Range: 0 to 65535 in steps of 1

Default: 102

This setting allows the user to change the TCP port number for Manufacturing Message Specification (MMS) connections. It is recommended that this setting be left at the default value.

NOTE

Do not set more than one protocol to the same TCP/UDP port number, as this results in unreliable operation of those protocols.

Configuration Type

Range: G2, E3-2.0

Default: G2

This setting specifies the method used to describe GOOSE subscription configuration in SCL. See the UR Series Communications Guide for details. Basically, in the G2 mode, the CID file contains IED elements for IEDs subscribed to by this IED containing GOOSE subscription information. In the E3 2.0 mode, the CID file has only one IED element and GOOSE subscription information is coded in data objects in the standard LGOS logical node used to monitor reception of the subscribed GOOSE. UR 7.30 or later accepts either mode.

5

GOOSE

The path is **Settings > Product Setup > Communications > IEC 61850 > GOOSE**.

Figure 5-11: IEC 61850 TxGOOSE Access Points panel

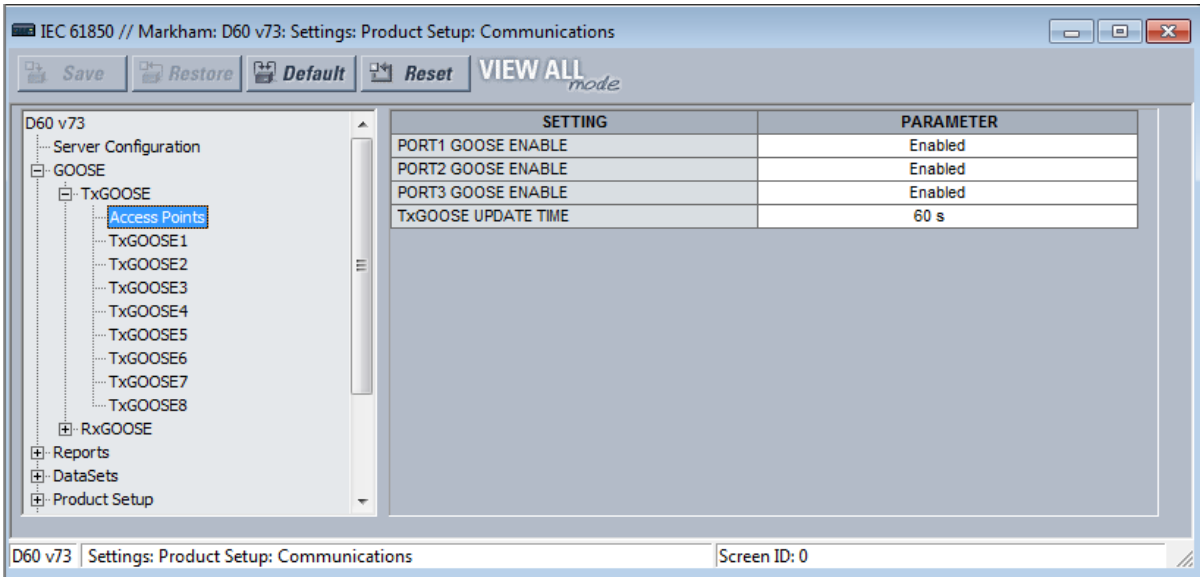

Support for Routable GOOSE

Routable GOOSE (R-GOOSE) is supported in firmware releases 7.4 and later. Routable GOOSE allows UR and other devices to be located in separate networks. Encryption/decryption of messages is performed by a separate gateway device. Messages are routed using a separate router, using IP addresses.

Conversion can be required for R-GOOSE and GOOSE message exchange. Examples include the following:

- A v7.4 device can send an R-GOOSE message to another v7.4 device when both have R-GOOSE active as the protocol. No conversion is required.
- A v7.4 device can send a GOOSE message to another v7.4 device when both have GOOSE active as the protocol. No conversion is required.
- For a v7.4 device to send an R-GOOSE message to a v7.3 or v5.9 device, for example, a C30 Controller System with the GOOSE Protocol Converter (software option 99) is required to transform the R-GOOSE to GOOSE for the other devices
- Similarly, a device that sends GOOSE messages to a v7.4 device that is expecting R-GOOSE requires the C30 with the converter

See the GOOSE Protocol Converter section in firmware version 7.4 or later C30 instruction manual for more information.

TxGOOSE

IEC 61850 GOOSE is an efficient method for simultaneous high-speed delivery of a set of generic substation event information in a publishing physical device to more than one subscribing physical device. A TxGOOSE is a UR element implementing a single IEC 61850 GOOSE message publishing service. The subscribing function in URs is performed by RxGOOSE elements, as described in the next section. Each UR with IEC 61850 order code options has eight TxGOOSE elements. Each TxGOOSE element can publish the values of up to 64 attributes of the IEC 61850 nodes in the UR.

Published TxGOOSE messages configured in the EnerVista UR Setup software can be subscribed by and the published operand values understood by other UR devices. In fact, they can be subscribed to and understood by any device of any manufacturer that implements the IEC 61850 edition 1.0 or 2.0 GOOSE subscription mechanism. The messages are published with a multicast address so that the network sends the messages to all devices; any number of devices that want to subscribe can.

The entities whose values are published in GOOSE messages are known as members. The members are itemized in an ordered list known as a data set. Each TxGOOSE can use any one of the data sets provided. See the DataSets section later for details.

Each enabled TxGOOSE transmits its message whenever a value change is detected in one or more of its members. To guard against the possibility that such a message is lost in the network before it reaches all subscribers, the message is quickly retransmitted several times. To allow subscribers to verify that their link to the publisher and the publisher itself are healthy, each message is also periodically retransmitted even while the values are unchanging. These latter messages are known as heartbeat messages, while the former are known as event messages. Heartbeat messages also provide means for a subscriber newly online to receive the published values in the absence of an event.

TxGOOSE1 and TxGOOSE2 scan for value changes in its FlexLogic operand members as frequently as such a change can occur. TxGOOSE1 and TxGOOSE2 are therefore suitable for highly time critical signals, such as tripping and dynamic blocking. FlexAnalog members are scanned for value changes only every 250 ms. See the Deadband Settings section later for a description of what is considered a value change in an analog member.

The remaining TxGOOSE, meaning TxGOOSE3 and up, scan both their FlexLogic and FlexAnalog members for value changes every 250 ms. They are suited for control applications, such as voltage control or power factor regulation.

The details of TxGOOSE message construction are contained in the UR Series Communications Guide. Knowledge of these details is not required to configure GOOSE.

The UR does not implement the Fixed-Length encoded GOOSE messages option specified in IEC 61850-8-1:2011 clause A.3; the UR always uses the ASN.1 Basic encoding rules (as specified in ISO/IEC 8825-1) as specified in IEC 61850-8-1:2004 and as optional in IEC 61850-8-1:2011 clause A.3. So do not try to configure the UR for fixed-offset TxGOOSE.

TxGOOSE

Navigate to **Settings > Product Setup > Communications > IEC 61850 > GOOSE > TxGOOSE > Access Points** to access the settings that are common to all GOOSE messages published.

The following settings are available.

PORT1 GOOSE ENABLE

Range: Enabled, Disabled

Default: Enabled

When set to Disabled, no GOOSE messages are published on F60 Ethernet port 1, and any GOOSE messages received on port 1 are ignored. When set to Enabled, all enabled GOOSE messages are published on F60 Ethernet port 1, and any GOOSE messages received on port 1 are listened to.

F60 Ethernet ports 2 and 3 each have a similar setting.

TxGOOSE UPDATE TIME

Range: 1 to 60 s in steps of 1 s

Default: 60 s

This setting specifies the time interval between heartbeat messages, which are messages that are sent periodically while no events are detected. The standard suggests that the heartbeat time be less than (actually half) of the timeAllowedtoLive parameter, which is set by the **TxGOOSE TIME TO LIVE** settings described later.

Navigate to **Settings > Product Setup > Communications > IEC 61850 > GOOSE > TxGOOSE > TxGOOSE1** to access the settings for the first TxGOOSE. The settings and functionality for the others are similar.

Figure 5-12: IEC 61850 TxGOOSE panel

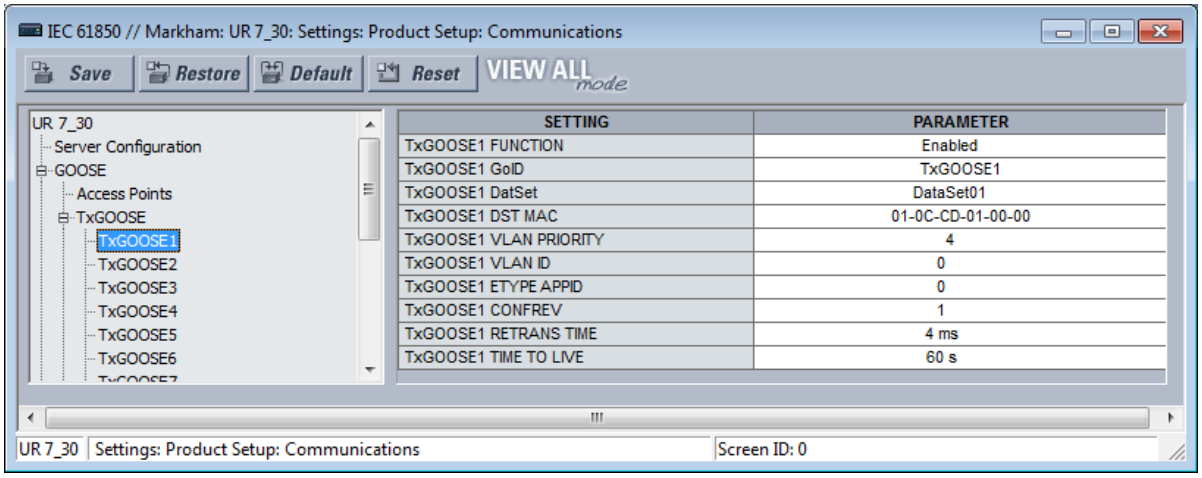

TxGOOSE1 FUNCTION

Range: Enabled, Disabled

Default: Enabled

When set to Disabled, TxGOOSE1 messages are not published. When set to Enabled, TxGOOSE1 messages are published.

When TxGOOSE1 to 8 are set to Disabled in EnerVista and subsequently Enabled by writing via MMS, the panel continues to read Disabled until relaunched. There is no polling capability to update automatically the IEC 61860 readings, so the panel needs to be closed then opened for the correct status to display.

TxGOOSE1 GoID

Range for Edition 2: 0 to 129 VisibleString characters

Range for Edition 1: 0 to 65 VisibleString characters

Default: TxGOOSE1

The entered value sets the goID value published in TxGOOSE1 messages, and can be used by subscribers to discriminate the TxGOOSE1 messages from other GOOSE messages.

TxGOOSE1 DatSet

Range: None, DataSet01, DataSet02,...

Default: None

This setting selects the published data set using the UR Setup software designator for the data set. The IEC 61850 name of the data sets are configured in the Datasets panel, as described later.

An ObjectReference to the data set, which consists of the concatenation of the string "<LDName>/LLN0." and the data set name, is published in the datSet field of TxGOOSE1 messages and can be used by subscribers to discriminate TxGOOSE1 messages from other GOOSE messages.

TxGOOSE1 DST MAC

Range: any 12 digit hexadecimal number

Default: 01-0C-CD-01-00-00

The value entered sets the Ethernet destination Media Access Control (MAC) address in published TxGOOSE1 messages. As the standard requires that the address have the multicast bit set TRUE, that is to say the second digit is set to an odd number, messages transmitted have the multicast bit set TRUE no matter its value in this setting.

The destination MAC address can be used by the network to restrict message delivery to selected devices that need to receive them, reducing network loading. This address also can be used by hardware in receiving devices to filter out messages that are of no interest to them, reducing processor burden. Different filtering algorithms are implemented by different devices. The standard recommends that the algorithm used by hardware of the receiving device be considered when assigning destination multicast addresses.

Subscribers can use this address to discriminate TxGOOSE1 messages from other GOOSE messages.

TxGOOSE1 VLAN PRIORITY

Range: 0, 1, 2, 3, 4, 5, 6, 7, 5-4, 6-4, 6-5, 7-4, 7-5, 7-6

Default: 4

When the value entered is 0, 1, 2, 3, 4, 5, 6, or 7, the User Priority value in the IEEE 802.1Q VLAN tag included in published TxGOOSE1 messages is set to that value. When one of the two-digit values is entered, the dynamic priority feature is selected: the first event message has the User Priority value of the first digit, and User Priority is decremented in each following message until reaching the value of the second digit. For instance, if the selected value is 7-5, then the User Priority values in successive messages beginning with the message triggered by an event is 7, 6, 5, 5, 5, 5, 5, and so on. Do not make a dynamic priority selection when standard behavior is required.

Network devices can forward a message with a higher priority value before a message with a lower priority value, which speeds delivery of high priority messages in heavily loaded networks. The standard recommends that higher priority messages, such as GOOSE, have priority values in the range of 4 to 7.

TxGOOSE1 VLAN ID

Range: 0 to 4095 in steps of 1

Default: 0

The value entered sets the VID value in the IEEE 802.1Q VLAN tag included in published TxGOOSE1 messages. VID can be used by network devices to direct messages to only selected devices, reducing network burden. VID values of 0 and 1 are assigned by IEEE 802.1Q to other functions and are not to be used for GOOSE.

TxGOOSE1 ETYPE APPID

Range: 0 to 65535 in steps of 1

Default: 0

The value entered sets the APPID value in published GOOSE messages and can be used by subscribers to discriminate TxGOOSE1 messages from other GOOSE messages.

The standard reserves the value range 0 to 16383 for GOOSE Type 1 (Fast messages), and reserves the value range 32768 to 41151 for GOOSE Type 1A (Trip messages). Some subscribers can process messages in the Type 1A range faster than messages in the Type 1 range. The standard reserves the default value (0) to indicate lack of configuration. The standard strongly recommends unique, source-orientated APPIDs within a given system.

TxGOOSE1 ConfRev

Range: 0 to 4294967295 in steps of 1
Default: 1

The value entered sets the confRev value in published GOOSE messages, and can be used by subscribers to discriminate TxGOOSE messages of the expected configuration revision from messages of a different revision. The standard requires that confRef be incremented each time the members or the order of the members published is changed, and each time the data set name is changed. The standard states that the value of 0 is reserved.

TxGOOSE1 RETRANS TIME

Range: 0 to 100 ms in steps of 1 ms
Default: 4 ms

If the entered time is non-zero, when a member value change is detected, four event transmissions are sent, then heartbeat transmissions resume. The interval between the first and second event transmissions, and between the second and third, is the time set here. The interval between the third and the fourth event transmission is double the set time. If the entered time is zero, only a single event transmission occurs, then heartbeat transmissions resume.

TxGOOSE1 TIME TO LIVE

Range: 1 to 300 s in steps of 1 s
Default: 300 s

The value entered sets the timeAllowedtoLive value in published TxGOOSE1 messages. The standard requires subscribers to assume a failure has occurred when another TxGOOSE1 message is not received within the published timeAllowedtoLive time.

Base this setting on the **TxGOOSE UPDATE TIME** and the tolerable number of contiguous message delivery misses. For example, if the heartbeat time is 10 s, and missing up to three successive messages is tolerable, make the setting 10*3 + 1 = 31 s. The extra second is to ensure that arrival of the third heartbeat transmission beats the timeAllowedtoLive timer. The standard suggests that the heartbeat time be less than (actually half) of the timeAllowedtoLive parameter.

RxGOOSE

Navigate to **Settings > Product Setup > Communications > IEC 61850 > GOOSE > RxGOOSE > RxGOOSE Messages**.

IEC 61850, GOOSE is an efficient method for simultaneous high-speed delivery of the same generic substation event information in a publishing physical device to more than one subscribing physical device. An RxGOOSE is a UR element implementing a single IEC 61850 GOOSE message subscribing service. The publishing function in URs is performed by TxGOOSE elements, as described in the previous section. Each F60 has 16 RxGOOSE elements. Each RxGOOSE element can subscribe to GOOSE messages from a specified publisher. Subscribed messages can contain up to 64 of any set of data attributes with basic types BOOLEAN, FLOAT32, INT32, Dbpos, TimeStamp, or Quality. Messages containing data objects, that is to say structured data, are not accepted.

With these conditions, GOOSE messages from any device of any manufacturer that implements the IEC 61850 edition 1.0 or 2.0 GOOSE publish service can be subscribed to. The UR accepts both the variable-length encoded GOOSE messages specified in IEC 61850-8-1:2004 and the Fixed-Length encoded GOOSE messages as specified in IEC 61850-8-1:2011 clause A.3.

Each enabled RxGOOSE monitors for interruption of the GOOSE messages that it subscribes to based on the value in the timeAllowedtoLive field of the last message received. If a new message is not received within that time interval, the RxGOOSE assumes that connectivity is lost. FlexLogic operands (for example, RxGOOSE1 On, RxGOOSE1 Off) reflect the status of each RxGOOSE connectivity. RxGOOSE connectivity of an RxGOOSE with non-zero MAC address is also considered lost after the F60 finishes restart until a message is received. When RxGOOSE connectivity is lost, a common RxGOOSE Fail self-test activates.

Navigate to **Settings > Product Setup > Communications > IEC 61850 > GOOSE > RxGOOSE > RxGOOSE Messages > RxGOOSE1** to access the settings that specify the messages to be accepted by the first RxGOOSE element. Messages that contain the value true in the ndsCom field are never accepted. Messages that contain the value true in the simulation field (test field in edition 1.0 messages) are accepted only when the UR test mode is Forcible or Isolated; see the Testing section at the end of this chapter for details. The settings and functionality for the other RxGOOSE are similar.

Navigate to **Settings > Product Setup > Communications > IEC 61850 > GOOSE > RxGOOSE > RxGOOSE Messages > RxGOOSE1**. The following settings are available.

Figure 5-13: IEC 61850 RxGOOSE Messages panel

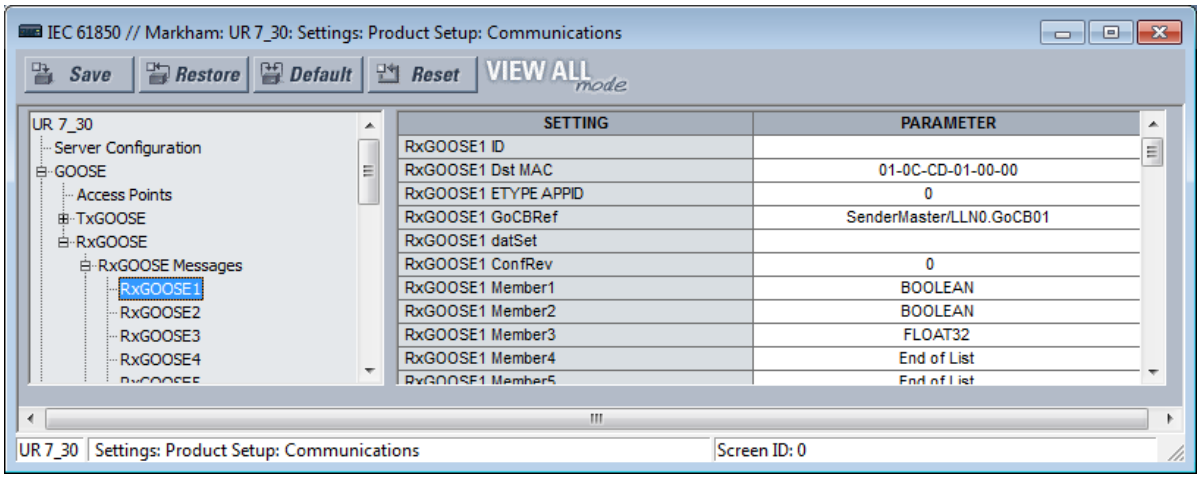

RxGOOSE1 ID

Range: 0 to 129 VisibleString characters
Default:

If the value entered has one or more characters, the goID field of incoming GOOSE messages must exactly match this value for the message to be accepted as a valid RxGOOSE1 message. If the entered value is the empty string, RxGOOSE1 does not check the value received in the goID field.

RxGOOSE1 Dst MAC

Range: any 12 digit hexadecimal number
Default: 00-00-00-00-00-00

Set this setting to the MAC address of the publisher. Only received GOOSE messages having a Media Access Control (MAC) address equal to this value are accepted as valid RxGOOSE1 messages. An entered address of zero disables RxGOOSE1.

If the publisher is a UR Series 7.3x device, the setting needs to match the value of the publisher's **TxGOOSE Dst MAC** setting.

RxGOOSE1 ETYPE APPID

Range: 0 to 65535 in steps of 1
Default: 0

If the value entered is non-zero, the APPID field of incoming GOOSE messages must exactly match this value for the message to be accepted as a valid RxGOOSE1 message. If the value entered is zero, RxGOOSE1 does not check the value received in the APPID field.

If the publisher is a UR Series 7.3x device, the setting needs to match the value of the publisher's **TxGOOSE ETYPE APPID** setting.

RxGOOSE1 GoCBRef

Range for Edition 2: 0 to 129 alphanumeric, underscore, slash and period characters, beginning with an alpha character
Range for Edition 1: 0 up to 65 alphanumeric, underscore, slash and period characters, beginning with an alpha character
Default:

The gocbRef field of incoming GOOSE messages must match this value for the message to be accepted as a valid RxGOOSE1 message. If the entered value is the empty string, RxGOOSE1 is disabled. If not the empty string, the entry needs to be an ACSI ObjectReference to the publishing control block in the format:

<LDName>/LLN0.<GoCBName>

where <LDName> is the function-related name if the logical device containing the publishing control block has "ldName" configured, otherwise the product-related name of that logical device, and <GoCBName> is the name of the publishing control block.

The F60 translates the ACSI format required for this setting to the MMS format used in GOOSE messages:

<LDName>/LLN0GO<GoCBName>

If the publisher is a UR 7.3x series device, <LDName> is the value of the publisher's Master functional ldName setting if that setting is not empty, otherwise it is the value of the publisher's IED NAME suffixed with "Master". If the publisher is a UR 7.3x series device, <GoCBName> is "GoCB" suffixed with the two digit TxGOOSE instance number, for example "GoCB01".

RxGOOSE1 datSet

Range for Edition 2: 0 to 32 alphanumeric and underscore characters, beginning with an alpha character
Range for Edition 1: 0 to 32 alphanumeric and underscore characters, beginning with an alpha character
Default:

If the entered value has one or more characters, the datSet field of incoming GOOSE messages must exactly match this value prefixed by <LDName>/LLN0$ for the message to be accepted as a valid RxGOOSE1 message. <LDName> is as specified in the RxGOOSE GoCBRef setting above. If the entered value is the empty string, RxGOOSE1 does not check the value received in the datSet field.

If the publisher is a UR 7.3x series device, set this setting to the value of the publisher's DataSetxx name setting, where xx is the instance number of the data set selected by the publisher's **TxGOOSE datSet** setting.

RxGOOSE1 ConfRev

Range: 0 to 4294967295 in steps of 1
Default: 1

If the value entered is non-zero, the confRev field of incoming GOOSE messages must exactly match this value for the message to be accepted as a valid RxGOOSE1 message. If the entered value is zero, RxGOOSE1 does not check the value received in the confRev field.

If the publisher is a UR 7.3x series device, set this setting to match the value of the publisher's **TxGOOSE ConfRev** setting.

RxGOOSE1 Member 1

Range: End of List, BOOLEAN, Dbpos (DPS), FLOAT32, INT32, Quality, TimeStamp
Default: End of List

This setting specifies the type that the first member of incoming GOOSE messages must be for the message to be accepted as a valid RxGOOSE1 message. There are similar settings for each of the members that the UR is able to subscribe to in a given GOOSE message. The member before the first member setting set to "End of List" must be the last member of the message for the message to be accepted as a valid RxGOOSE1 message.

If the publisher is a UR 7.3x series device, set these settings to match the basic type of the members of the publisher's data set selected by the publisher's **TxGOOSE datSet** setting.

RxGOOSE inputs

The values received by RxGOOSE elements need to be converted to FlexLogic or FlexAnalog operands so that they can be used by other UR elements. This conversion is done by RxGOOSE Boolean, RxGOOSE DPS, and RxGOOSE Analog elements. Each RxGOOSE Boolean can convert the value of a specified Boolean member received by a specified RxGOOSE to a FlexLogic operand. Each RxGOOSE DPS can convert the value of a specified Dbpos (Double bit position) member to four FlexLogic operands, one for each of the four possible Dbpos states. Each RxGOOSE Analog can convert the value of a specified FLOAT32 member to a FlexAnalog operand. Each of these operands reverts to its default state when the RxGOOSE connectivity is lost. INT32, Quality, and TimeStamp members cannot be converted to operands, and thus although they can be accepted in GOOSE messages, they have no effect on the UR.

RxGOOSE Boolean, RxGOOSE DPS, and RxGOOSE Analog elements are mapped to various data objects in <iedName>Master/GGIO3. This is to allow reading of their values via MMS and to allow references to them in SCL files. GGIO3 has no settings, nor is it visible via UR Setup software. See the UR Communications Guide for more information on GGIO3.

RxGOOSE Boolean inputs

Navigate to **Settings > Product Setup > Communications > IEC 61850 > GOOSE > RxGOOSE > RxGOOSE Boolean Inputs > RxGOOSE Boolean1** to access the settings for the first RxGOOSE Boolean. The settings and functionality for the others are similar.

Figure 5-14: RxGOOSE Boolean panel

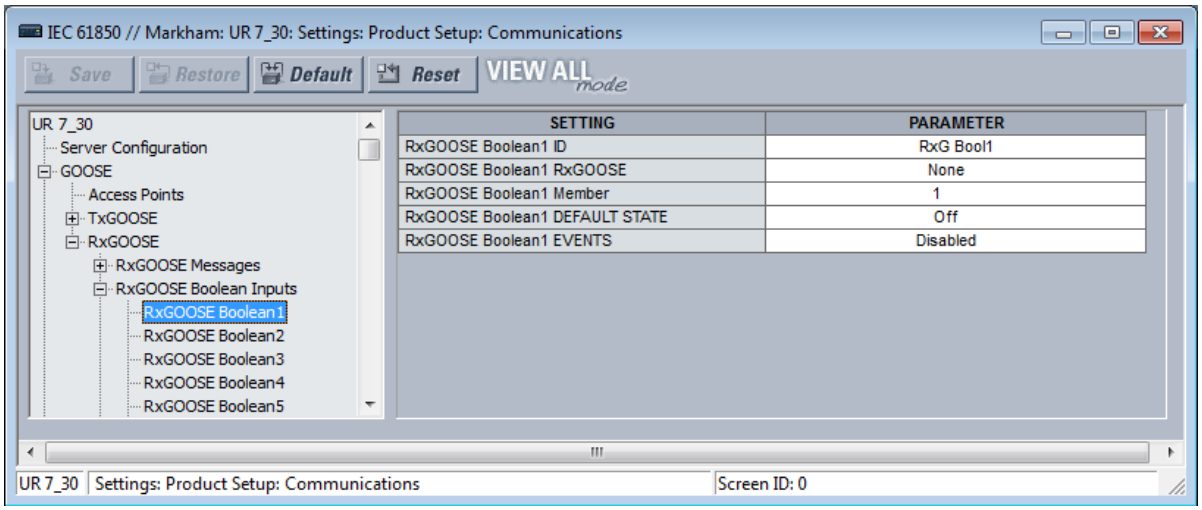

RxGOOSE Boolean1 ID

Range: 0 to 12 characters
Default: RxG Bool1

This setting allows the user to assign descriptive text to the name of the RxGOOSE Boolean1 FlexLogic operand. The full operand name is the value of this setting appended with " On". This descriptive text also appears in the SCL files associated with the UR.

RxGOOSE Boolean1 RxGOOSE

Range: None, RxGOOSE1, RxGOOSE2, and so on
Default: None

This setting selects the RxGOOSE containing the value that drives the RxGOOSE Boolean1 FlexLogic operand. If set to None, the RxGOOSE Boolean1 FlexLogic operand assumes its default state.

RxGOOSE Boolean1 Member

Range: 1 to 64 in steps of 1
Default: 1

This setting selects the GOOSE message member that drives the RxGOOSE Boolean1 FlexLogic operand. A setting of 1 selects the first member, 2 selects the second member, and so on. Entering a number greater than the number of members in the message and entering the number of a member that is not a BOOLEAN results in the RxGOOSE Boolean1 FlexLogic operand assuming its default state.

RxGOOSE Boolean1 DEFAULT STATE

Range: On, Off, Latest/On, Latest/Off
Default: On

This setting selects the logic state for the RxGOOSE Boolean1 FlexLogic operand if the UR has just completed startup and the selected RxGOOSE has not yet received a message, or the selected RxGOOSE has lost its connectivity with the publisher. The following choices are available:

- "On" value defaults the input to logic 1
- "Off" value defaults the input to logic 0

- "Latest/On" freezes the input in case of lost connectivity. If the latest state is unknown, such as after UR power-up but before the first communication, the input defaults to logic 1. When communication resumes, the input becomes fully operational.
- "Latest/Off" freezes the input in case of lost connectivity. If the latest state is unknown, such as after UR power-up but before the first communication, the input defaults to logic 0. When communication resumes, the input becomes fully operational.

RxGOOSE Boolean1 EVENTS

Range: Disabled, Enabled

Default: Disabled

This setting selects whether Off to On transitions of the RxGOOSE Boolean1 FlexLogic operand are recorded by the event recorder. If set to Enabled, Off to On transitions are recorded. On to Off transitions are not recorded, even if events are enabled.

RxGOOSE DPS inputs

Navigate to **Settings > Product Setup > Communications > IEC 618560 > GOOSE > RxGOOSE > RxGOOSE DPS Inputs > RxGOOSE DPS1** to access the settings for the first RxGOOSE Boolean. The settings and functionality for the others are similar.

Figure 5-15: RxGOOSE DPS Inputs panel

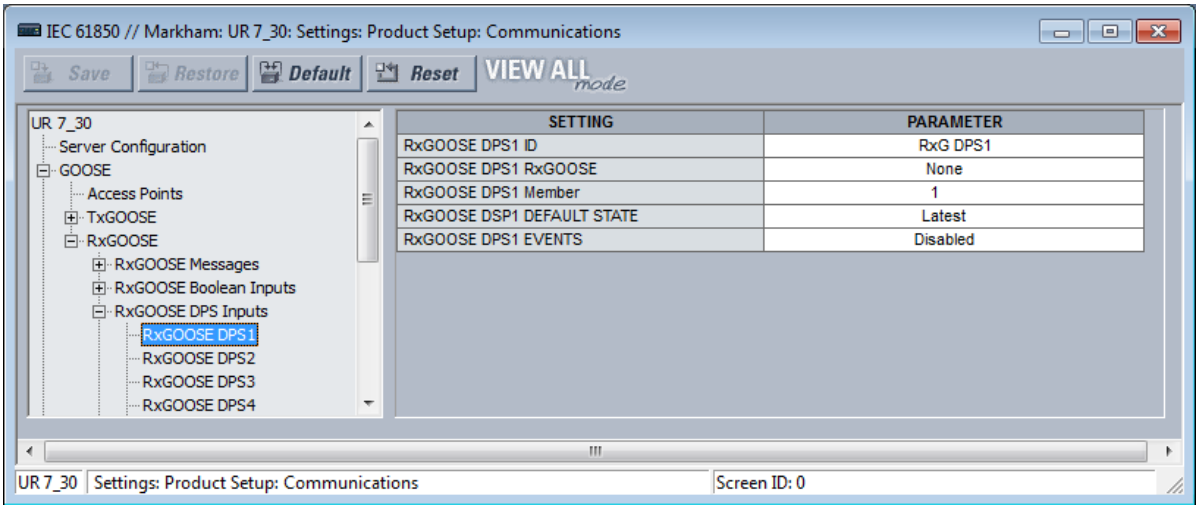

RxGOOSE DPS1 ID

Range: 0 to 12 characters

Default: RxG DPS1

This setting allows the user to assign descriptive text to the names of the four RxGOOSE DPS1 FlexLogic operands. The full operand name is the value of this setting appended with "Intermediate," "On," "Off," or "Bad." This descriptive text also appears in the SCL files associated with the F60.

RxGOOSE DPS1 RxGOOSE

Range: None, RxGOOSE1, RxGOOSE2, and so on

Default: None

This setting selects the RxGOOSE containing the value that drives the RxGOOSE DPS1 FlexLogic operand. If set to None, the RxGOOSE DPS1 FlexLogic operand assumes its default state.

RxGOOSE DPS1 Member

Range: 1 to 64 in steps of 1

Default: 1

This setting selects the GOOSE message member that drives the RxGOOSE DPS1 FlexLogic operand. A setting of 1 selects the first member, 2 selects the second member, and so on. Entering a number greater than the number of members in the message and entering the number of a member that is not a Dbpos results in the RxGOOSE DPS1 FlexLogic operand assuming its default state.

RxGOOSE DPS1 DEFAULT STATE

Range: intermediate-state, off, on, bad-state, Latest

Default: Latest

This setting selects the logic state for the data attribute @Master/GGIO3.IndPos01.stVal when the UR has just completed start-up and the selected RxGOOSE has not yet received a message, and when the RxGOOSE has lost its connectivity with the publisher. When this setting is selected to Latest, the value of @Master/GGIO3.IndPosψψ.stVal is intermediate-state when the UR has just completed start-up and the selected RxGOOSE has not yet received a message, and the latest received value when the RxGOOSE loses its connectivity with the publisher.

RxGOOSE DPS1 EVENTS

Range: Disabled, Enabled

Default: Disabled

This setting selects whether Off to On transitions of the RxGOOSE DPS1 FlexLogic operands are recorded by the event recorder. If set to Enabled, Off to On transitions are recorded. On to Off transitions are not recorded, even if events are enabled.

RxGOOSE analog inputs

Navigate to **Settings > Product Setup > Communications > IEC 61850 > GOOSE > RxGOOSE > RxGOOSE Analog Inputs > RxGOOSE Analog Input1** to access the settings for the first RxGOOSE Boolean. The settings and functionality for the others are similar.

Figure 5-16: RxGOOSE Analog Inputs panel

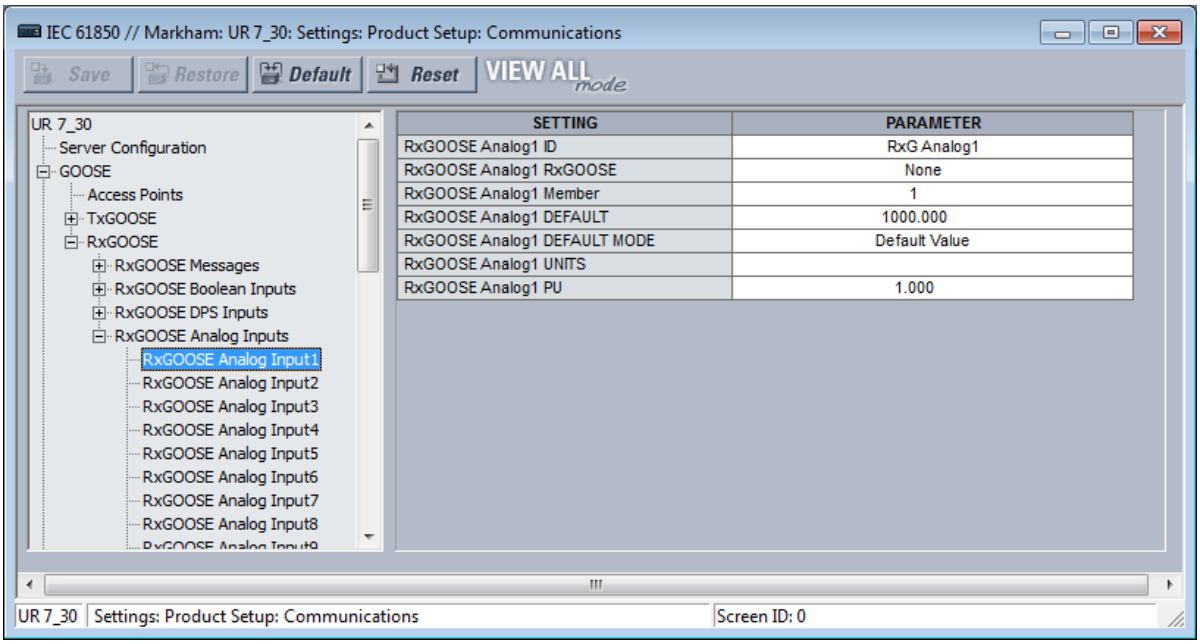

RxGOOSE Analog1 ID

Range: 0 to 12 characters

Default: RxG Analog1

This setting allows the user to assign descriptive text to RxGOOSE Analog1. This descriptive text also appears in the SCL files associated with the F60. Unlike RxGOOSE Booleans and RxGOOSE DPS, the RxGOOSE Analog operands have fixed names, for example RxGOOSE Analog1.

RxGOOSE Analog1 RxGOOSE

Range: None, RxGOOSE1, RxGOOSE2, and so on

Default: None

This setting selects the RxGOOSE containing the value that drives the RxGOOSE Analog1 FlexAnalog operand. If set to None, the RxGOOSE Analog1 FlexAnalog operand assumes its default state.

RxGOOSE Analog1 Member

Range: 1 to 64 in steps of 1

Default: 1

This setting selects the GOOSE message member that drives the RxGOOSE Analog1 FlexAnalog operand. A setting of 1 selects the first member, 2 selects the second member, and so on. Entering a number greater than the number of members in the message and entering the number of a member that is not a FLOAT32 results in the RxGOOSE Analog1 FlexAnalog operand assuming its default state.

RxGOOSE Analog1 DEFAULT

Range: -1000000.000 to 1000000.000 in steps of 0.001

Default: 1000.000

This setting specifies the value of the GOOSE analog input when the selected RxGOOSE has lost its connectivity with the publisher and the RxGOOSE Analog1 DEFAULT MODE is set to "Default Value." Otherwise this setting has no effect. This setting is stored as an IEEE 754 / IEC 60559 floating point number. Because of the large range of this setting, not all possible values can be stored. Some values can be rounded to the closest possible floating point number.

RxGOOSE Analog1 DEFAULT MODE

Range: Default Value, Last Known

Default: Default Value

When the selected RxGOOSE has lost its connectivity with the publisher and this setting is "Last Known," the value of the RxGOOSE Analog1 FlexLogic operand remains at the last received value. When the selected RxGOOSE has lost its connectivity with the publisher and this setting value is "Default Value," then the RxGOOSE Analog1 FlexLogic operand is defined by the RxGOOSE Analog1 DEFAULT setting. After restart, until a message is received, the operand value is the default value.

RxGOOSE Analog1 UNITS

Range: up to 4 characters

Default:

This setting specifies a four-character string that can is used in the actual values display of RxGOOSE Analog1.

RxGOOSE Analogs are floating-point values, with no units. The RxGOOSE UNIT and PU base settings allow the user to configure RxGOOSE Analog, so that it can be used in a FlexElement.

RxGOOSE Analogs that represent current, voltage, power, frequency, angles, or power factor can be used in a FlexElement. The following text must be used in the UNITS setting, to represent these types of analogs: A, V, W, var, VA, Hz, deg, and no text (blank setting) for power factor.

RxGOOSE Analogs can be compared to other RxGOOSE Analogs with any character string or no string.

RxGOOSE Analog1 PU

Range: 0.000 to 1000000000.000 in steps of 0.001

Default: 1.000

This setting specifies the per-unit base value for other F60 features to use with the RxGOOSE Analog1 operand. A FlexElement for instance subtracts two quantities after converting their values to integers rescaled to a common base, the common base being the largest of the base values of the two quantities. If one of quantities is RxGOOSE Analog1 and its per-unit base value is not appropriate, the rescaling operation can result in unnecessary loss of precision or overflow

in the integer result. The FlexElement Base Units table in the Settings > FlexLogic > FlexElements section later, which tabulates the per-unit base value used by its pickup setting and implies the per-unit base used by other FlexAnalogs, can be of use in selecting a value for the **RxGOOSE Analog1 PU** setting.

Some UR elements have requirements for the type of input operands, for instance current type or voltage type. These elements assume that RxGOOSE Analog operands are of whatever type is necessary to meet these requirements.

The per-unit base setting represents thousands, not single units. For example, a PU base of 1.000 is actually 1000 and a PU base of 0.001 is 1.

When using RxGOOSE Analogs and PU base in FlexElements, the largest value that can be displayed in the FlexElement actual values is 2,140,000.000.

Reports

Navigate to **Settings > Product Setup > Communications > IEC 61850 > Reports**.

Figure 5-17: IEC 61850 buffered report panel

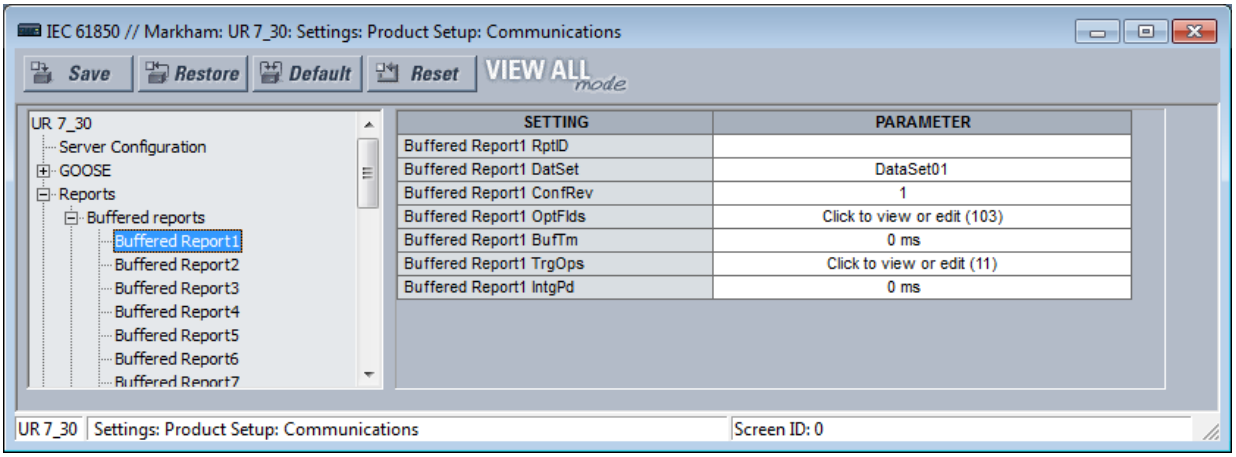

An IEC 61850 Report server is an efficient method for delivery of generic substation event information in a single server to a single client, such as a supervisory control IED. A Configurable Report is a UR element implementing an IEC 61850 Report server, either of the buffered or unbuffered kind. The following table lists the number of Configurable Report elements. Each Configurable Report element can report the values of up to 64 FlexLogic or FlexAnalog operands. Buffered report elements queue value changes that occur while the client is offline and delivered when the client re-connects. Up to 512 events can be queued. Unbuffered control blocks purge all value change events when the connection to the client is lost; any events that occur while the client is not connected are lost.

Table 5-10: Number of report elements

	Number
Buffered reports	20
Unbuffered reports	14

Configurable Reports interoperate with any client device of any manufacturer that conforms to the IEC 61850 edition 1.0 or 2.0 report client requirements.

The entities whose values are reported by a Configurable Report are known as members. The members are itemized in an ordered list known as a data set. Each Configurable Report can use any one of the data sets provided.

Each enabled Configurable Report transmits an update to its client whenever a value change is detected in one or more of its members. Also, the control block can be configured to send integrity reports containing the present value of all members either on demand from the client or periodically. A TCP handshaking mechanism causes messages that are not read and acknowledged by the client to be retransmitted.

For a Configurable Report to operate, its members must be selected (that is, its data set configured) and a client must open a connection to, configure, and enable its report control block. Control blocks and data sets can be pre-configured by sending the F60 a CID file. See the UR Series Communications Guide for details. EnerVista UR Setup also can be used to select the data set members and to pre-configure the control blocks.

Each buffered report has the following settings.

Buffered Report1 RptID

Range: 0 to 129 VisibleString characters
Default: empty string

The name of the report. The entered value sets the RptID value in Buffered Report1 messages, and it can be used by the client to discriminate Buffered Report1 messages from other messages. If the number of characters entered is zero, the value used for RptID in messages is an ObjectReference to the report's control block, that is, "<LDName>/LLN0BR"BRCB01".

Buffered Report1 DatSet

Range: None, DataSet01, DataSet02, ...
Default: None

This setting selects the data set whose members' status is reported in Buffered Report1 messages using the UR Setup software designator for the data set. The IEC 61850 name of the data sets are configured in the Datasets panel, as described later.

An ObjectReference to the data set, which consists of the concatenation of the string "<LDName>/LLN0$" and the data set name, is used in the datSet field of report messages, and it can be used by the client to discriminate Buffered Report1 messages from other messages.

Buffered Report1 ConfRev

Range: 0 to 4294967295 in steps of 1
Default: 1

The entered value sets the confRev value in Buffered Report1 messages, and it can be used by clients to discriminate report messages of the expected configuration revision from messages of a different revision. The standard requires that confRef be incremented each time the members or the order of the members is changed, and each time the data set name is changed. The standard states that the value of 0 is reserved.

Buffered Report1 OptFlds

Range: The check box for each individual bit can be enabled or not (see figure)
Default: All bits true

The OptFlds setting is bitstring that controls which of the optional fields are included in report messages. The figure shows the available option bits.

Figure 5-18: Options for buffered report messages

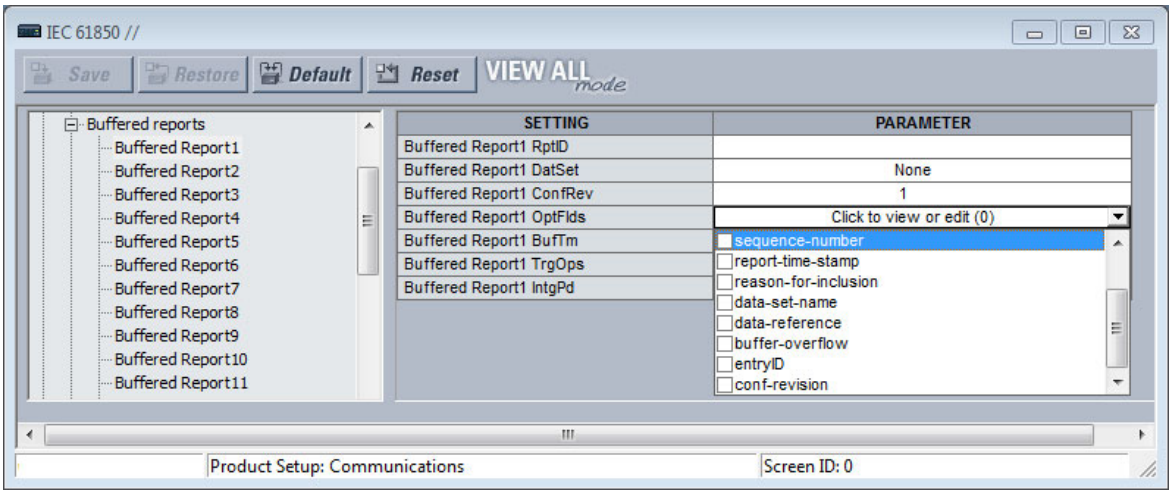

Buffered Report1 BufTm

Range: 0 to 4294967295 in steps of 1
Default: 0

The entered value sets the time interval in milliseconds for the buffering of events for inclusion in a single report.

Buffered Report1 TrgOps

Range: The check box for an individual bit can be enabled or not
Default: All bits true

The TrgOps setting is bitstring that controls which trigger conditions are monitored in this report. The options are as follows:

- data-change
- quality-change
- integrity
- general interrogation

Buffered Report1 IntgPd

Range: 0 to 4294967295 in steps of 1
Default: 0

The entered value sets the period in milliseconds for generating Buffered Report1 integrity reports. An integrity report includes the values of all members of the referenced data set, whether a change has occurred or not.

Each unbuffered report has the following settings.

Unbuffered Report1 RptID

Range: 0 to 129 VisibleString characters
Default:

The name of the report. The entered value sets the RptID value in Unbuffered Report1 messages, and it can be used by the client to discriminate Unbuffered Report1 messages from other messages. If the number of characters entered is zero, the value used for RptID in messages is an ObjectReference to the report's control block, that is, "<LDName>/LLN0RP"URCB01".

Unbuffered Report1 DatSet

Range: None, DataSet01, DataSet02, ...
Default: None

This setting selects the data set whose members' status is reported in Unbuffered Report1 messages using the UR Setup software designator for the data set. The IEC 61850 name of the data sets are configured in the Datasets panel, as described later.

An ObjectReference to the data set, which consists of the concatenation of the string "<LDName>/LLN0$" and the data set name, is used in the datSet field of report messages, and it can be used by the client to discriminate Unbuffered Report1 messages from other messages.

Unbuffered Report1 ConfRev

Range: 0 to 4294967295 in steps of 1
Default: 0

The entered value sets the confRev value in Unbuffered Report1 messages, and it can be used by clients to discriminate report messages of the expected configuration revision from messages of a different revision. The standard requires that confRef be incremented each time the members or the order of the members is changed, and each time the data set name is changed.

Unbuffered Report1 OptFlds

Range: The check box for an individual bit can be enabled or not
Default: All bits true

The OptFlds setting is bitstring that controls which of the optional fields are included in report messages. The options are as follows:

- sequence-number
- report-time-stamp
- reason-for-inclusion
- data-set-name
- data-reference
- conf-revision

Notice that OptFlds bits buffer-overflow and entryID are not applicable to unbuffered reports even though the bits exist in the protocol. They are therefore labelled N/A (not applicable) on the display.

Unbuffered Report1 BufTm

Range: 0 to 4294967295 in steps of 1
Default: 0

The entered value sets the time interval in milliseconds for the buffering of events for inclusion into a single report.

Unbuffered Report1 TrgOps

Range: The check box for an individual bit can be enabled or not
Default: All bits true

The TrgOps setting is bitstring that controls which trigger conditions are monitored in this report. The options are as follows:

- data-change
- quality-change
- integrity
- general interrogation

Unbuffered Report1 IntgPd

Range: 0 to 4294967295 in steps of 1.
Default: 0

The entered value sets the period in milliseconds for generating Unbuffered Report1 integrity reports. An integrity report includes the values of all members of the referenced data set, whether a change has occurred or not.

DataSets

Navigate to **Settings > Product Setup > Communications > IEC 61850 > DataSets**.

As mentioned in the preceding GOOSE and Reports sections, the members whose values are communicated by these services are itemized in an ordered list known as a data set. Each UR with the IEC 61850 option has 12 data sets. Each data set can contain as many as 64 members. Any data set can be used simultaneously by any number of TxGOOSE elements and/or by any number of Configurable Report elements. UR Setup software can configure any FlexLogic operands and any FlexAnalog operands as members.

Figure 5-19: IEC 61850 DataSets

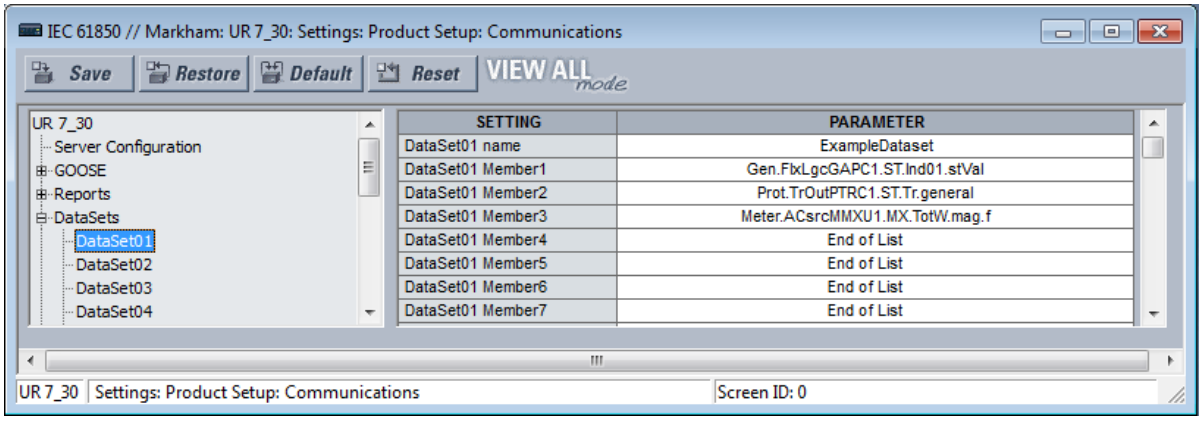

UR Setup requires data set members to be IEC 61850 data objects or data attributes with Functional Constraint ST or MX. Certain FlexLogic and FlexAnalog operands have factory assigned data attributes as tabulated in the UR Series Communications Guide. All FlexLogic and FlexAnalog operands can be user-assigned to GGIO1 or GGIO4 data attributes, so that operands without factory assigned data attributes can still have their values published. See the GGIO1 and GGIO4 sections later for details.

Datasets used by TxGOOSE1, TxGOOSE2, and/or by reports also provide a chatter suppression service for their Boolean members. Oscillation in a value, also known as chatter, can be caused by errors in logic programming, inadequate hysteresis (deadband) on a threshold, or a failed station component. Chatter can flood a communications network with GOOSE messages, degrading response time for all users. If chatter is detected in a Boolean member, TxGOOSE suspends GOOSE event message triggering and report message triggering from that member for as long as the condition exists, and for a minimum period of one second. While sending is suspended, a self-test message identifying the specific data item detected as oscillating is activated.

Navigate to **Settings > Product Setup > Communications > IEC 61850 > DataSets > DataSet01** to access the settings for the first data set. The settings and functionality for the others are similar.

DataSet01 name

Range: 0 to 32 VisibleString characters

Default: DataSet01

The value entered sets the name of the data set, which is required to be unique within the UR for proper operation. An ObjectReference to the data set consists of a string that is the concatenation of "<LDName>/LLN0$" and the DataSet01 name setting value. An ObjectReference to the data set is published in the datSet field of TxGOOSE messages, and it can be used by subscribers to discriminate the messages of that TxGOOSE from other GOOSE messages. An ObjectReference to the data set is optionally published in the DatSet field of Report messages. Valid characters are upper and lowercase letters, digits, and the underscore (_) character. The first character must be a letter.

DataSet01 Member1

Range: End of List or any instantiated 61850 data object or data attribute with Functional Constraint ST or MX

Default: End of List

This setting specifies the first member in TxGOOSE1 messages. There is a similar setting for each of the up to 64 members that the UR allows in a Dataset. Only values of members before the first set to End of List are published.

Deadband settings

A deadband is a range in which no action occurs, expressed as a percentage.

The IEC 61850 panels contain hundreds of deadband settings, such as in the following panels: System Setup > Signal Sources, FlexLogic, Grouped Elements, Control Elements, and GGIO4. Each panel is not outlined here.

Deadband setting names all end either with "DEADBAND" or .db. As they all work the same way, but each on a different analog value, a single description applicable to all deadband settings is given here. The analog value that each deadband setting applies to is usually obvious from the name of the setting. However, a tabulation of the analog values and their associated deadband setting can be found in the UR Series Communications Guide.

Figure 5-20: Deadband settings with .db suffix

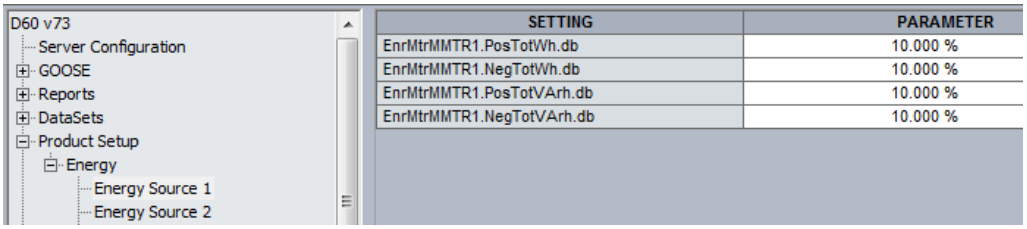

GOOSE, buffered report, and unbuffered report messages are for the most part transmitted only when there is a value change in one or more of their members. Most analog values continuously dither by an amount that is not significant. Were a report to be sent each time an insignificant analog value change occurred, then the communications network floods with GOOSE and report messages, degrading response time for all users.

To control this, a deadband setting is provided for each analog value. Also, in addition to the present actual value of each analog ("instMag" in the following figure), there is a deadbanded value ("mag" in the figure), which is updated with the present value only when the difference between the two exceeds the deadband setting (db in the figure). Changes to this deadbanded value trigger transmissions when included in GOOSE and report data sets.

Figure 5-21: Deadband settings

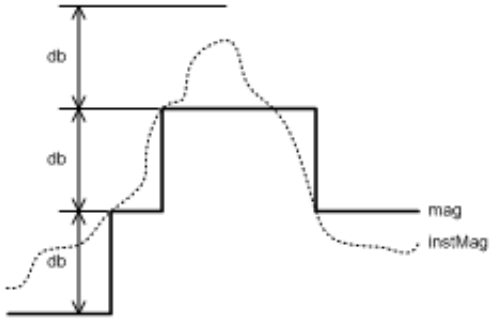

Deadband settings are entered in UR Setup in units of percent of the difference between the "max." and "min." of the associated analog value. A zero deadband setting suppresses transmission triggering. The range of deadband settings is 0.000 to 100.000% in steps of 0.001. The default value is 10.000%.

GGIO4 elements have individual settings for "min." and "max." The min. and max. for FlxEIGAPC#.OpSig.db (FLEXELEMENT # OpSig) are -50 pu and +50 pu respectively. The min. value for all other quantities is 0. The max. values are as follows:

- Phase current — 46 x phase CT primary setting
- Neutral current — 46 x ground CT primary setting
- Phase and phase-to-phase voltage — 275 x VT ratio setting
- Power (real, reactive, apparent, 3-phase, and 1-phase) — 46 x phase CT primary setting x 275 x VT ratio setting
- Energy (real or imaginary) — 46 x phase CT primary setting x 275 x VT ratio setting x 1 hour
- Frequency — 90 Hz
- Frequency rate of change — 90 Hz/s
- Power factor — 2
- Angle — 360 degrees

Select the deadband settings from knowledge of the characteristics of the power system quantity measured and knowledge of the demands of the applications receiving the measurement via GOOSE or report such that changes of significance to the application are promptly reported, yet the network is not overly burdened with event messages.

Breaker 1

The UR breaker control and status monitoring elements have certain settings that configure how the IEC 61850 protocol interacts with these elements. These settings are described in this section. See the Breakers section in the System Setup section of this chapter for details on the operation of breaker control elements.

Navigate to **Settings > Communications > IEC 61850 > System Setup > Breakers > Breaker 1** to access the settings that configure the IEC 61850 protocol interface with the first breaker control and status monitoring element. The settings and functionality for the others are similar.

Figure 5-22: IEC 61850 Breaker panel

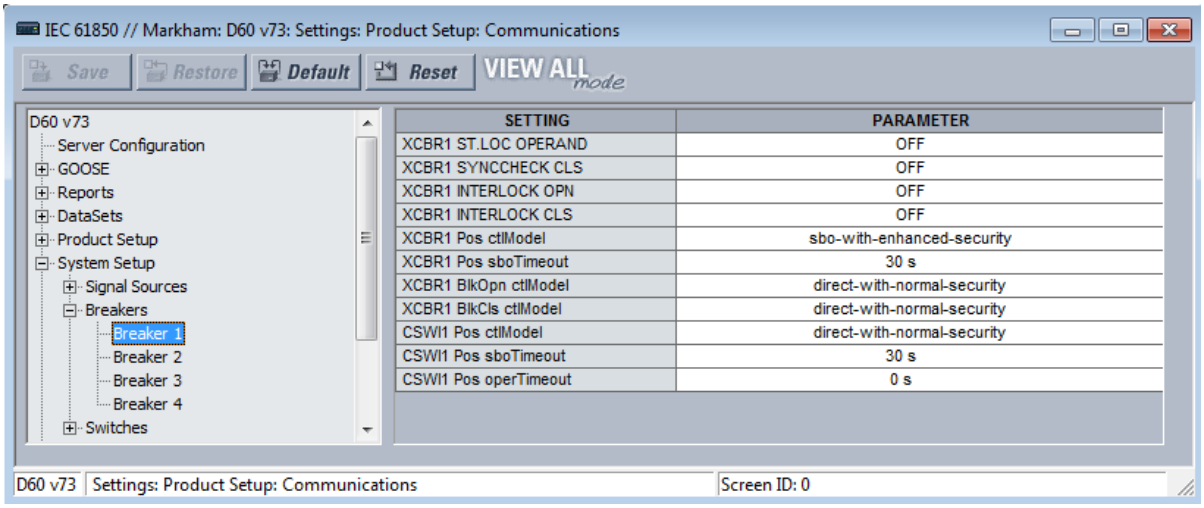

XCBR1 ST.LOC OPERAND

Range: any FlexLogic operand
Default: OFF

This setting is used to select a FlexLogic operand that declares to IEC 61850 services that breaker 1 is selected for local control. While the selected operand is asserted, Bkr0XCBR1.Loc.stVal is true and IEC 61850 commands to BkrCSWI1.Pos and Bkr0XCBR1.Pos are not accepted, and a Negative Response (-Rsp) is issued with the REASON CODE of Blocked-by-switching-hierarchy.

XCBR1 SYNCCHECK CLS

Range: any FlexLogic operand
Default: ON

This setting is used to select a FlexLogic operand that declares to IEC 61850 services that synchrocheck conditions are acceptable for closing breaker 1. If a SelectWithValue or Operate service with ctlVal true and with Check.SynchroCheck true is requested of either BkrCSWI1.Pos or Bkr0XCBR1.Pos and the selected operand is not asserted, a Negative Response (-Rsp) is issued with the REASON CODE of Blocked-by-synchrocheck.

XCBR1 INTERLOCK OPN

Range: any FlexLogic operand
Default: ON

This setting is used to select a FlexLogic operand that declares to IEC 61850 services that interlocking conditions are not acceptable for opening breaker 1. While the selected operand is asserted, the value of BkrCILO.EnaOpn.stVal is false. If a SelectWithValue or Operate service with ctlVal false and with Check.Interlock-check true is requested of either BkrCSWI1.Pos or Bkr0XCBR1.Pos, and the selected operand is not activated, a Negative Response (-Rsp) is issued with the REASON CODE of Blocked-by-interlocking.

XCBR1 INTERLOCK CLS

Range: any FlexLogic operand

Default: ON

This setting is used to select a FlexLogic operand that declares to IEC 61850 services that interlocking conditions are not acceptable for closing breaker 1. While the selected operand is asserted, the value of BkrCILO.EnaCls.stVal is false. If a SelectWithValue or Operate service with ctlVal true and with Check.Interlock-check true is requested of either BkrCSWI1.Pos or Bkr0XCBR1.Pos and the selected operand is not activated, a Negative Response (-Rsp) is issued with the REASON CODE of Blocked-by-interlocking.

XCBR1 Pos ctlModel

Range: status-only, direct-with-normal-security, sbo-with-normal-security, direct-with-enhanced-security, sbo-with-enhanced-security

Default: sbo-with-enhanced-security

This setting selects the control model clients must use to successfully control the breaker 1 signals marked Bkr0XCBR1.PosOpn.ctlVal and Bkr0XCBR1.PosCls.ctlVal on the Breaker Control Logic (Sheet 1 of 2) diagram in the Settings > System Setup section later in this chapter. These signals force a breaker 1 three-phase trip or close control while the operand selected by setting XCBR1 ST.LOC OPERAND is not active.

"sbo" here is select-before-operate. Enhanced security means that the UR reports to the client the breaker 1 position at the end of the command sequence.

XCBR1 Pos sboTimeout

Range: 2.000 to 60.000 s in steps of 0.001s

Default: 30.000 s

This setting specifies the maximum time between a select and an operate command to breaker 1 signals marked Bkr0XCBR1.PosOpn.ctlVal and Bkr0XCBR1.PosCls.ctlVal in order for the operand to be successful. This setting is only relevant when XCBR1 Pos ctlModel is sbo-with-normal-security or sbo-with-enhanced-security.

XCBR1 BlkOpn ctlModel

Range: status-only, direct-with-normal-security, sbo-with-normal-security

Default: direct-with-normal-security

This setting selects the control model clients must use to successfully control the breaker 1 signal marked Bkr0XCBR1.BlkOpn.ctlVal signal on the Breaker Control Logic (Sheet 1 of 2) diagram in the Settings > System Setup section later. This signal when true blocks breaker 1 trip control while the operand selected by setting XCBR1 ST.LOC OPERAND is not active.

XCBR1 BlkCls ctlModel

Range: status-only, direct-with-normal-security, sbo-with-normal-security

Default: direct-with-normal-security

This setting selects the control model clients must use to successfully control the breaker 1 signal marked Bkr0XCBR1.BlkCls.ctlVal signal on the Breaker Control Logic (Sheet 1 of 2) diagram in the Settings > System Setup section later. This signal when true blocks breaker 1 close control while the operand selected by setting XCBR1 ST.LOC OPERAND is not active.

CSWI1 Pos ctlModel

Range: status-only, direct-with-normal-security, sbo-with-normal-security, direct-with-enhanced-security, sbo-with-enhanced-security

Default: direct-with-normal-security

This setting selects the control model clients must use to successfully control the breaker 1 signals marked BkrCSWI1.PosOpn.ctlVal and BkrCSWI1.PosCls.ctlVal on the Breaker Control Logic (Sheet 1 of 2) diagram in the Settings > System Setup section earlier. These signals force a breaker 1 three-phase trip or close control while the operand selected by setting XCBR1 ST.LOC OPERAND is not active.

CSWI1 Pos sboTimeout

Range: 2.000 to 60.000 s in steps of 0.001s

Default: 30.000 s

This setting specifies the maximum time between a select and an operate command to breaker 1 via BkrCSWI1.Pos in order for the operand to be successful. This setting is only relevant when CSWI1 Pos ctlModel is sbo-with-normal-security or sbo-with-enhanced-security.

CSWI1 Pos operTimeout

Range: 0.000 to 2.000 s in steps of 0.001s

Default: 0.100 s

This setting specifies the maximum time between an operate command to breaker 1 via BkrCSWI1.Pos until BkrCSWI1.Pos.stVal enters the commanded state. The command terminates if the commanded state is not reached in the set time.

Switch 1

The UR disconnect switch control and status monitoring elements have certain settings that configure how the IEC 61850 protocol interacts with these elements. These settings are described in this section. See the Settings > System Setup > Disconnect Switches section later in this chapter for details on the operation of the disconnect switch control elements.

Navigate to **Settings > Product Setup > Communications > IEC 61850 > System Setup > Switches > Switch 1** to access the settings that configure the IEC 61850 protocol interface with the first disconnect switch control and status monitoring element. The settings and functionality for the others are similar.

Figure 5-23: Switches panel

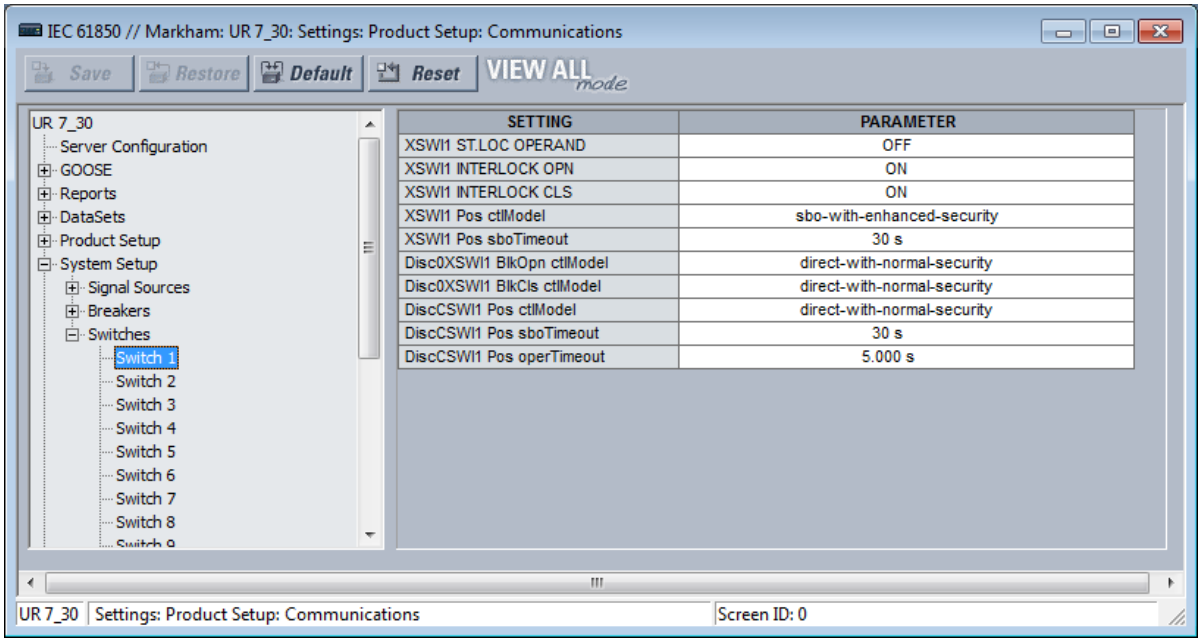

XSWI1 ST.LOC OPERAND

Range: any FlexLogic operand

Default: Off

This setting is used to select a FlexLogic operand that declares to IEC 61850 services that disconnect switch 1 is selected for local control. While the selected operand is asserted, Disc0XSWI1.Loc.stVal is true and IEC 61850 commands to DiscCSWI1.Pos and Disc0XSWI1.Pos are not accepted, and a Negative Response (-Rsp) is issued with the REASON CODE of Blocked-by-switching-hierarchy.

XSWI1 INTERLOCK OPN

Range: any FlexLogic operand

Default: On

This setting is used to select a FlexLogic operand that declares to IEC 61850 services that interlocking conditions are not acceptable for opening disconnect switch 1. While the selected operand is asserted, the value of DiscCILO.EnaOpn.stVal is false. If a SelectWithValue or Operate service with ctlVal false and with Check.Interlock-check true is requested of DiscCSWI1.Pos or Disc0XSWI1.Pos and the selected operand is not activated, a Negative Response (-Rsp) is issued with the REASON CODE of Blocked-by-interlocking.

XSWI1 INTERLOCK CLS

Range: any FlexLogic operand

Default: On

This setting is used to select a FlexLogic operand that declares to IEC 61850 services that interlocking conditions are not acceptable for closing disconnect switch 1. While the selected operand is asserted, the value of DiscCILO.EnaCls.stVal is false. If a SelectWithValue or Operate service with ctlVal true and with Check.Interlock-check true is requested of DiscCSWI1.Pos or Disc0XSWI1.Pos and the selected operand is not activated, a Negative Response (-Rsp) is issued with the REASON CODE of Blocked-by-interlocking.

XSWI1 Pos ctlModel

Range: status-only, direct-with-normal-security, sbo-with-normal-security, direct-with-enhanced-security, sbo-with-enhanced-security

Default: sbo-with-enhanced-security

This setting selects the control model that clients must use to successfully control the disconnect switch 1 signals marked Disc0XCBR1.PosOpn.ctlVal and Disc0XCBR1.PosCls.ctlVal on the Disconnect Switch Logic diagram in the Settings > System Setup section later. These signals force a disconnect switch trip or close control while the operand selected by setting XSWI1 ST.LOC OPERAND is not active.

"sbo" here is select-before-operate. Enhanced security means that the F60 reports to the client the disconnect switch 1 position the end of the command sequence.

XSWI1 Pos sboTimeout

Range: 2.000 to 60.000 s in steps of 0.001s

Default: 30.000 s

This setting specifies the maximum time between a select and an operate command to disconnect switch 1 signals marked Disc0XCBR1.PosOpn.ctlVal and Disc0XCBR1.PosCls.ctlVal in order for the operand to be successful. This setting is only relevant when XSWI1 Pos ctlModel is sbo-with-normal-security or sbo-with-enhanced-security.

XSWI1 BlkOpn ctlModel

Range: status-only, direct-with-normal-security, sbo-with-normal-security

Default: sbo-with-normal-security

This setting selects the control model clients must use to successfully control the disconnect switch 1 signal marked DiscCSWI1.BlkOpn.ctlVal signal on the Disconnect Switch Logic diagram in the Settings > System Setup section later. This signal when true blocks disconnect switch 1 trip control while the operand selected by setting XSWI1 ST.LOC OPERAND is not active.

XSWI1 BlkCls ctlModel

Range: status-only, direct-with-normal-security, sbo-with-normal-security

Default: sbo-with-normal-security

This setting selects the control model clients must use to successfully control the disconnect switch 1 signal marked DiscCSWI1.BlkCls.ctlVal signal on the Disconnect Switch Logic diagram in the Settings > System Setup section later. This signal when true blocks disconnect switch 1 close control while the operand selected by setting XSWI1 ST.LOC OPERAND is not active.

CSWI1 Pos ctlModel

Range: status-only, direct-with-normal-security, sbo-with-normal-security, direct-with-enhanced-security, sbo-with-enhanced-security

Default: sbo-with-normal-security

This setting selects the control model clients must use to successfully control the disconnect switch 1 signals marked DiscCSWI1.PosOpn.ctlVal and DiscCSWI1.PosCls.ctlVal on the Disconnect Switch Logic diagram in the Settings > System Setup section later. These signals force a disconnect switch trip or close control while the operand selected by setting XSWI1 ST.LOC OPERAND is not active.

CSWI1 Pos sboTimeout

Range: 2.000 to 60.000 s in steps of 0.001s

Default: 30.000 s

This setting specifies the maximum time between a select and an operate command to disconnect switch 1 via BkrCSWI1.Pos in order for the operand to be successful. This setting is only relevant when CSWI1 Pos ctlModel is sbo-with-normal-security or sbo-with-enhanced-security.

CSWI1 Pos operTimeout

Range: 0.000 to 65.535 s in steps of 0.001s

Default: 5.000 s

This setting specifies the maximum time between an operate command to disconnect switch 1 via BkrCSWI1.Pos until BkrCSWI1.Pos.stVal enters the commanded state. The command terminates if the commanded state is not reached in the set time.

Setting Groups

The UR implements a setting groups element as detailed in the Control Elements > Setting Groups section of this chapter. The active setting group and the setting group open for edits can be selected via MMS commands SelectActiveSG and SelectEditSG. The setting related to these IEC 61850 commands are described here.

Navigate to **Settings > Product Setup > Communications > IEC 61850 > Control Elements > Setting Groups** to access the setting that configures the IEC 61850 setting group commands.

Figure 5-24: Setting Groups panel

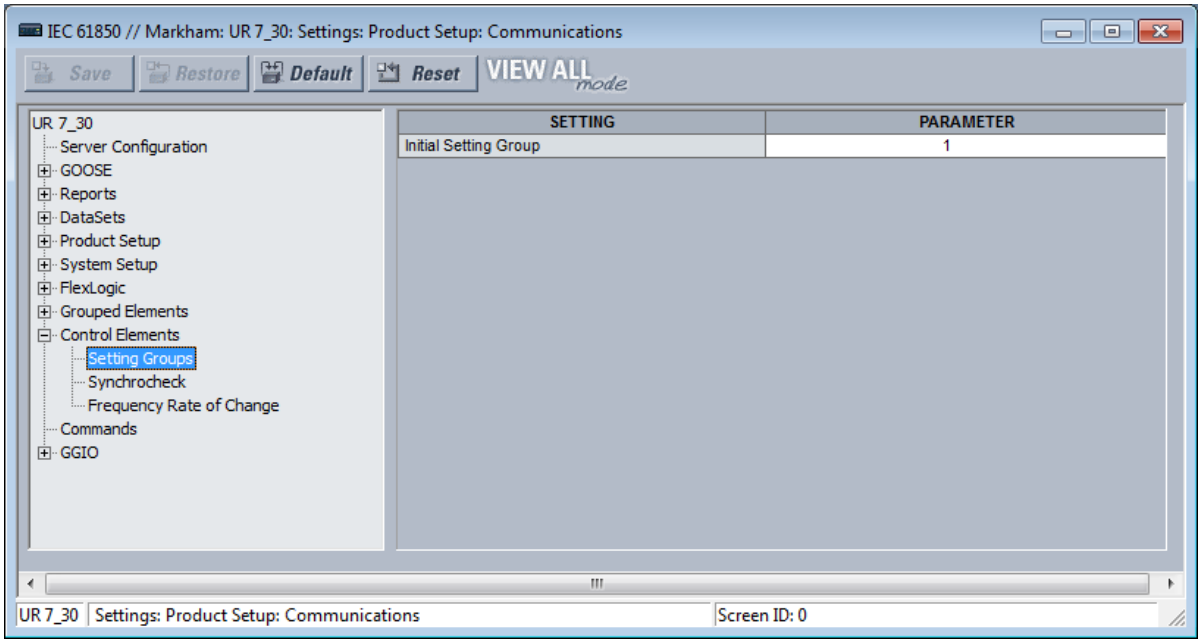

Initial Setting Group

Range: 1 to 6 in steps of 1

Default: 1

The entered value sets the initial value of the non-volatile register normally controlled by the service SelectActiveSG. This initialization occurs only on the UR reboot immediately following the receipt of a valid CID file.

This setting is not mapped into the IEC 61850 information model, but sets the value of SettingControl element attribute actSG in SCL files.

Commands

The UR implements a number of clear records commands as detailed in the Commands and Targets chapter of this manual. Several of these commands also can be issued via IEC 61850. The settings related to these IEC 61850 commands are described here.

Navigate to **Settings > Product Setup > Communications > IEC 61850 > Commands** to access the settings that configure the IEC 61850 protocol interface for record clear commands.

Figure 5-25: Commands panel

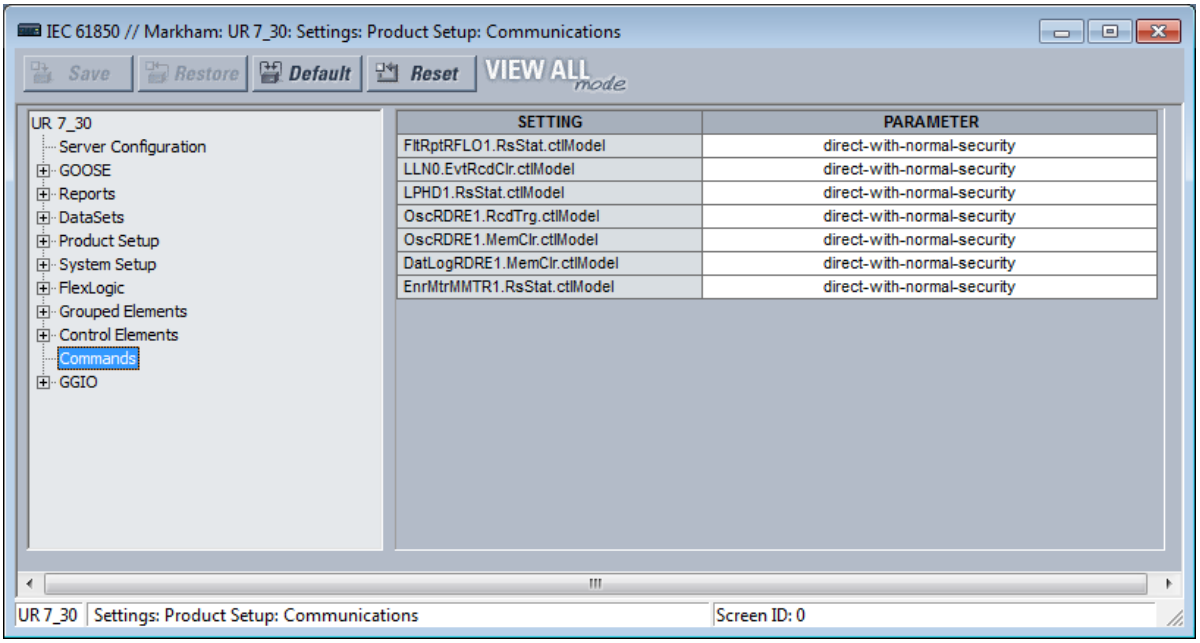

FltRptRFLO1.RsStat.ctlModel

Range: direct-with-normal-security, sbo-with-normal-security

Default: direct-with-normal-security

This setting selects the control model clients must use to successfully control the command CLEAR FAULT REPORTS. "sbo" here is select-before-operate. Enhanced security means that the F60 reports to the client the breaker 1 position at the end of the command sequence.

LLN0.EvtRcdClr.ctlModel

Range: direct-with-normal-security, sbo-with-normal-security

Default: direct-with-normal-security

This setting selects the control model clients must use to successfully control the command CLEAR EVENT RECORDS.

LPHD1.RsStat.ctlModel

Range: direct-with-normal-security, sbo-with-normal-security

Default: direct-with-normal-security

This setting selects the control model clients must use to successfully control the command CLEAR ALL RELAY RECORDS.

OscRDRE1.RcdTrg.ctlModel

Range: direct-with-normal-security, sbo-with-normal-security
Default: direct-with-normal-security

This setting selects the control model clients must use to successfully control the command FORCE TRIGGER.

OscRDRE1.MemClr.ctlModel

Range: direct-with-normal-security, sbo-with-normal-security
Default: direct-with-normal-security

This setting selects the control model clients must use to successfully control the command CLEAR OSCILLOGRAPHY.

DatLogRDRE1.MemClr.ctlModel

Range: direct-with-normal-security, sbo-with-normal-security
Default: direct-with-normal-security

This setting selects the control model clients must use to successfully control the command CLEAR DATA LOGGER.

EnrMtrMMTR.RsStat.ctlModel

Range: direct-with-normal-security, sbo-with-normal-security
Default: direct-with-normal-security

This setting selects the control model clients must use to successfully control the command CLEAR ENERGY.

GGIO1

GGIO1 is a UR feature that allows up to 128 UR FlexLogic operands to be user-mapped to IEC 61850 information model data attributes.

For the value of a FlexLogic operand to be read via MMS, included in TxGOOSE messages, or included in buffered/unbuffered reports, the value must be assigned to a data attribute. GGIO1 allows those FlexLogic operands that have not yet been factory-assigned to a data attribute to be user-assigned to a generic data attribute, and thus have their values included in IEC 61850 communications.

Navigate to **Settings > Product Setup > Communications > IEC 61850 > GGIO > GGIO1** to access the settings for GGIO1.

Figure 5-26: IEC 61850 GGIO1 panel

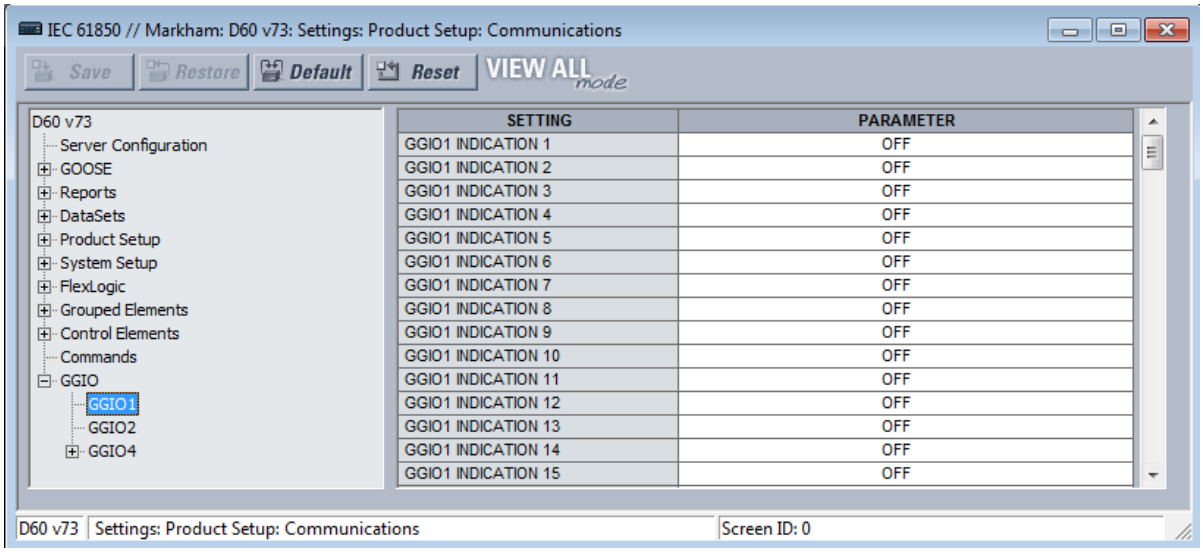

GGIO1 INDICATION 1

Range: any FlexLogic operand
Default: OFF

This setting selects the FlexLogic operand whose value is mapped into the IEC 61850 data attribute <LDName>/GGIO1.Ind001.stVal. See the FlexLogic section in this chapter for a list of FlexLogic operands.

GGIO1 INDICATION 2

Range: any FlexLogic operand
Default: OFF

Selects the FlexLogic operand mapped to <LDName>/GGIO1.Ind002.stVal, and so on.

GGIO2

Virtual Inputs are controllable FlexLogic operands that can be controlled via IEC 61850 commands to GGIO2, by DNP, by Modbus, and by the UR front panel. The settings related to these IEC 61850 commands are described here.

Navigate to **Settings > Product Setup > Communications > IEC 61850 > GGIO > GGIO2** to access the settings that configure the IEC 61850 protocol interface for Virtual Input commands.

Figure 5-27: GGIO2 panel

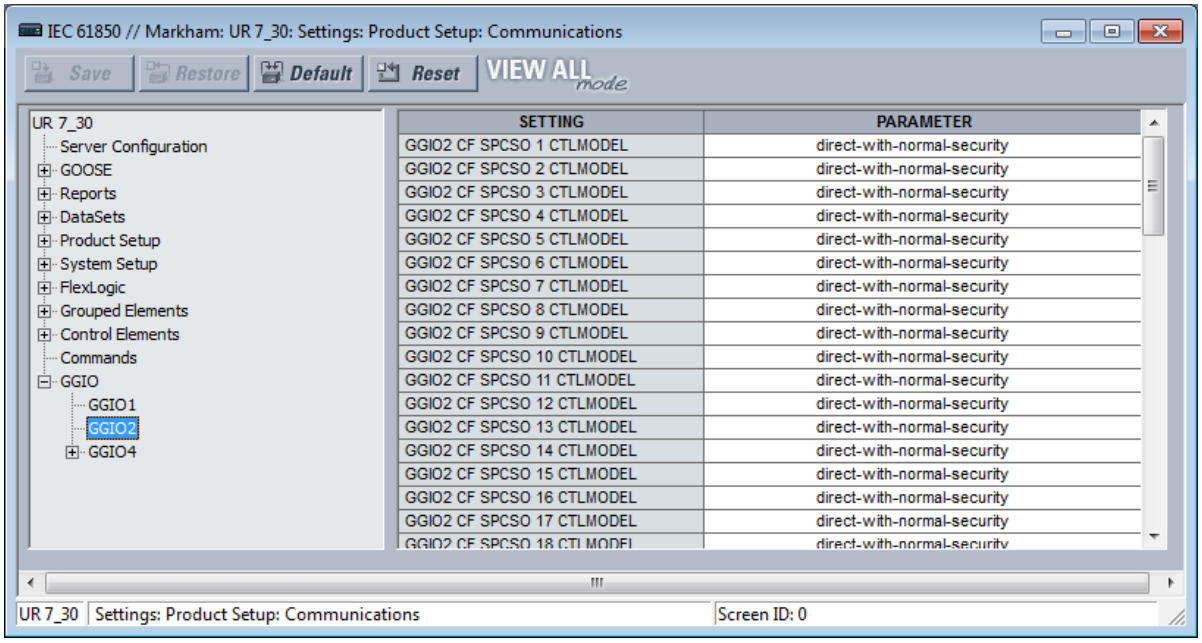

GGIO2 CF SPCSO 1 ctlModel

Range: status-only, direct-with-normal-security, sbo-with-normal-security
Default: direct-with-normal-security

This setting selects the control model clients must use to successfully control Virtual Input 1. "sbo" here is select-before-operate.

GGIO2 CF SPCSO 2 ctlModel

Range: status-only, direct-with-normal-security, sbo-with-normal-security
Default: direct-with-normal-security

Selects the control model for Virtual Input 2, and so on.

GGIO4

GGIO4 is a UR feature that allows any of up to 32 UR FlexAnalog operands to be user-mapped to an IEC 61850 information model data attribute.

For the value of a FlexAnalog operand to be read via MMS, included in TxGOOSE messages, or included in buffered/unbuffered reports, the value must be assigned to a data attribute. GGIO4 allows those FlexAnalog operands that have not yet been factory assigned to a data attribute to be user-assigned to a generic data attribute, and thus have their values included in IEC 61850 communications.

Navigate to **Settings > Product Setup > Communications > IEC 61850 > GGIO > GGIO4 > GGIO4.AnIn1** to access the settings for the first GGIO4 value. The settings and functionality for the others are similar.

Figure 5-28: GGIO4 panel

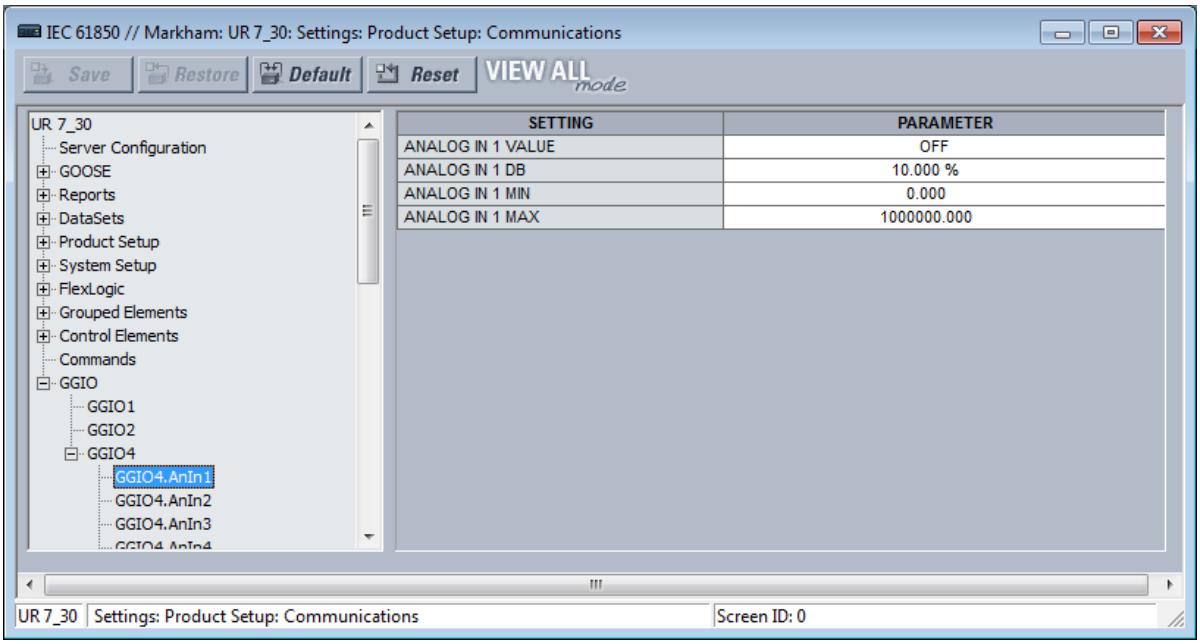

ANALOG IN 1 VALUE

Range: any FlexAnalog operand

Default: OFF

This setting selects the FlexAnalog operand whose value is mapped into the IEC 61850 data attribute <LDName>/GGIO4.AnIn01.instMag.f. The value of the FlexAnalog operand is converted automatically to the format and scaling required by the standard, that is to say primary amperes, primary volts, and so on. See Appendix A for a list of FlexAnalog operands.

ANALOG IN 1 DB

Range: 0.000 to 100.000% in steps of 0.001

Default: 10.000%

This setting specifies the deadband for the **ANALOG IN 1 VALUE**. The deadband is used to determine when to update the deadbanded magnitude from the instantaneous magnitude. The deadband is a percentage of the difference between the "max." and "min." values. Here, the "max." and "min." are as specified by the settings **ANALOG IN 1 MAX** and **ANALOG IN 1 MIN**.

See the Deadband Settings section earlier for a description of deadbanded values.

ANALOG IN 1 MIN

Range: -1000000000.000 to 1000000000.000 in steps of 0.001

Default: 1000.000

This setting specifies the "min." value used in deadband calculations. The scaling of this setting is the same as used by <LDName>/GGIO4.AnIn01.instMag.f. This setting is stored as an IEEE 754 / IEC 60559 floating point number. Because of the large range of this setting, not all possible values can be stored. Some values are rounded to the closest possible floating point number.

ANALOG IN 1 MAX

Range: -1000000000.000 to 1000000000.000 in steps of 0.001

Default: 0.000

This setting specifies the "max." value used in deadband calculations. The scaling of this setting is the same as used by <LDName>/GGIO4.AnIn01.instMag.f. This setting is stored as an IEEE 754 / IEC 60559 floating point number. Because of the large range of this setting, not all possible values can be stored. Some values are rounded to the closest possible floating point number.

File transfer by IEC 61850

The F60 supports file transfer by IEC 61850. The approach is as follows, using the SISCO AX-S4 61850 client software as an example.

1. In the AX-S4 61850 Explorer window, click the **Tools** menu and access the SISCO File Transfer Utility.
2. Select the **Remote AR Name** from the drop-down list. Available files appear in the **File Specification** area on the right side of the window.
3. With the **Copy** option active, select a file to transfer and click the **Go** button. The file is copied and displays in the **Local** list on the left side of the window.
4. Repeat the process to transfer any other files.

Figure 5-29: File transfer by IEC 61850

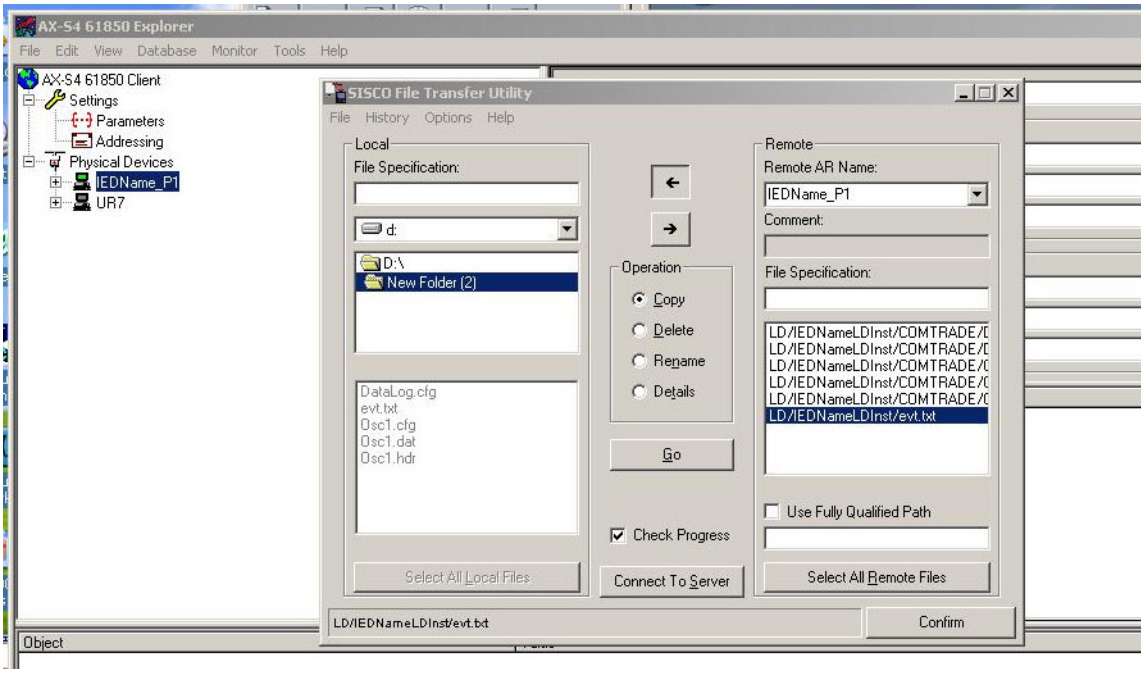

5.3.4.13 Web server HTTP protocol

SETTINGS ⇨ PRODUCT SETUP ⇨⇩ COMMUNICATIONS ⇨⇩ WEB SERVER HTTP PROTOCOL

■ WEB SERVER ■ HTTP PROTOCOL	⇔	HTTP TCP PORT NUMBER: 80	Range: 0 to 65535 in steps of 1

The F60 contains an embedded web server and can display pages in a web browser. The web pages are organized as a series of menus that can be accessed starting at the F60 "Main Menu." Web pages are read-only and are available showing DNP and IEC 60870-5-104 points lists, Modbus registers, event records, fault reports, and so on. First connect the F60 and a computer to an Ethernet network, then enter the IP address of the F60 Ethernet port in a web browser.

To close the port, set the port number to 0.

Any change takes effect when the F60 is restarted.

Figure 5-30: Example of UR web page showing event records

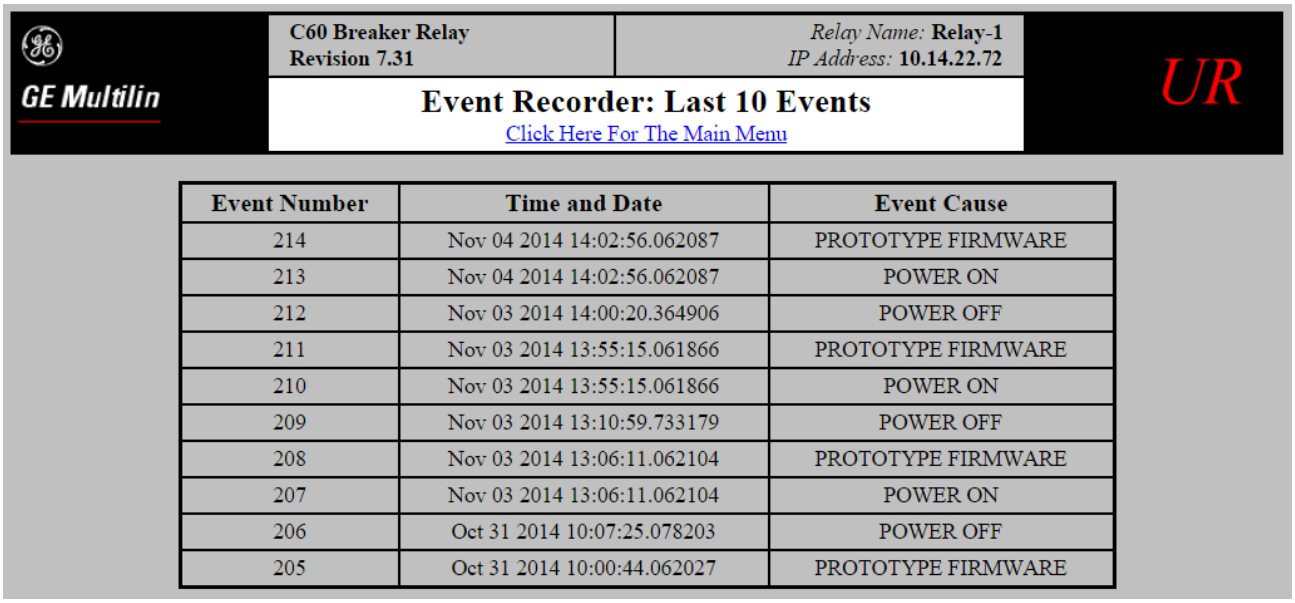

GE Multilin

C60 Breaker Relay
Revision 7.31

Relay Name: **Relay-1**
IP Address: **10.14.22.72**

UR

Event Recorder: Last 10 Events

Click Here For The Main Menu

Event Number	Time and Date	Event Cause
214	Nov 04 2014 14:02:56.062087	PROTOTYPE FIRMWARE
213	Nov 04 2014 14:02:56.062087	POWER ON
212	Nov 03 2014 14:00:20.364906	POWER OFF
211	Nov 03 2014 13:55:15.061866	PROTOTYPE FIRMWARE
210	Nov 03 2014 13:55:15.061866	POWER ON
209	Nov 03 2014 13:10:59.733179	POWER OFF
208	Nov 03 2014 13:06:11.062104	PROTOTYPE FIRMWARE
207	Nov 03 2014 13:06:11.062104	POWER ON
206	Oct 31 2014 10:07:25.078203	POWER OFF
205	Oct 31 2014 10:00:44.062027	PROTOTYPE FIRMWARE

NOTE

Do not set more than one protocol to the same TCP/UDP port number, as this results in unreliable operation of those protocols.

5

5.3.4.14 TFTP protocol

SETTINGS ⇨ PRODUCT SETUP ⇨⇩ COMMUNICATIONS ⇨⇩ TFTP PROTOCOL

■ TFTP PROTOCOL ■	⇔	TFTP MAIN UDP PORT NUMBER: 69	Range: 0 to 65535 in steps of 1
	⇩	TFTP DATA UDP PORT 1 NUMBER: 0	Range: 0 to 65535 in steps of 1
	⇩	TFTP DATA UDP PORT 2 NUMBER: 0	Range: 0 to 65535 in steps of 1

The Trivial File Transfer Protocol (TFTP) can be used to transfer files from the F60 over a network. The F60 operates as a TFTP server. TFTP client software is available from various sources, including Microsoft Windows NT. The dir.txt file obtained from the F60 contains a list and description of all available files, for example event records and oscillography.

While TFTP is supported, the put function is not for security reasons. For example, you can enter a "get" command but not a "put" command.

TFTP MAIN UDP PORT NUMBER — To close the port, set the port number to 0. Any change takes effect when the F60 is restarted.

NOTE

Do not set more than one protocol to the same TCP/UDP port number, as this results in unreliable operation of those protocols.

5.3.4.15 IEC 60870-5-104 protocol

SETTINGS ⇨ PRODUCT SETUP ⇨⇩ COMMUNICATIONS ⇨⇩ IEC 60870-5-104 PROTOCOL

■ IEC 60870-5-104 ■ PROTOCOL	⇔	IEC TCP PORT NUMBER: 2404	Range: 0 to 65535 in steps of 1

■ IEC NETWORK ■ CLIENT ADDRESSES	See below
IEC COMMON ADDRESS OF ASDU: 0	Range: 0 to 65535 in steps of 1
IEC CYCLIC DATA PERIOD: 60 s	Range: 1 to 65535 s in steps of 1
IEC CURRENT DEFAULT THRESHOLD: 30000	Range: 0 to 65535 in steps of 1
IEC VOLTAGE DEFAULT THRESHOLD: 30000	Range: 0 to 65535 in steps of 1
IEC POWER DEFAULT THRESHOLD: 30000	Range: 0 to 65535 in steps of 1
IEC ENERGY DEFAULT THRESHOLD: 30000	Range: 0 to 65535 in steps of 1
IEC PF DEFAULT THRESHOLD: 1.00	Range: 0.00 to 1.00
IEC OTHER DEFAULT THRESHOLD: 30000	Range: 0 to 65535 in steps of 1
IEC REDUNDANCY ENABLED: No	Range: No, Yes

IEC 60870-5-104 is a transmission protocol for network access, specifically for communication between a control station and substation over a TCP/IP network.

The F60 supports the IEC 60870-5-104 protocol. This protocol is enabled when the **SETTINGS ⇨ PRODUCT SETUP ⇨⇩ COMMUNICATIONS ⇨ PROTOCOL** setting is set to IEC 60870-5-104. The F60 can be used as an IEC 60870-5-104 slave device connected to a maximum of two masters (usually either an RTU or a SCADA master station). Since the F60 maintains two sets of IEC 60870-5-104 data change buffers, ideally no more than two masters actively communicate with the F60 at one time.

The **IEC ------- DEFAULT THRESHOLD** settings are used to determine when to trigger spontaneous responses containing M_ME_NC_1 analog data. These settings group the F60 analog data into types: current, voltage, power, energy, and other. Each setting represents the default threshold value for all M_ME_NC_1 analog points of that type. For example, to trigger spontaneous responses from the F60 when any current values change by 15 A, the **IEC CURRENT DEFAULT THRESHOLD** setting is set to 15. Note that these settings are the default values of the deadbands. P_ME_NC_1 (parameter of measured value, short floating point value) points can be used to change threshold values, from the default, for each individual M_ME_NC_1 analog point. Whenever power is removed and re-applied to the F60, the default thresholds are in effect.

The **IEC REDUNDANCY** setting decides whether multiple client connections are accepted or not. If redundancy is set to Yes, two simultaneous connections can be active at any given time.

IEC TCP PORT NUMBER — To close the port, set the port number to 0. Any change takes effect when the F60 is restarted.

IEC COMMON ADDRESS OF ASDU — The change takes effect when the F60 is restarted.

IEC CYCLIC DATA PERIOD — The change takes effect when the F60 is restarted.

NOTE

Do not set more than one protocol to the same TCP/UDP port number, as this results in unreliable operation of those protocols.

SETTINGS ⇨ PRODUCT SETUP ⇨⇩ COMMUNICATIONS ⇨⇩ IEC 60870-5-104 PROTOCOL ⇨⇩ IEC NETWORK CLIENT ADDRESSES

■ IEC NETWORK ■ CLIENT ADDRESSES	⇔	CLIENT ADDRESS 1: 0.0.0.0	Range: standard IPV4 address format

⇩

⇧ **CLIENT ADDRESS 5: 0.0.0.0** Range: standard IPV4 address format

The F60 can specify a maximum of five clients for its IEC 104 connections. These are IP addresses for the controllers to which the F60 can connect. A maximum of two simultaneous connections are supported at any given time.

5.3.4.16 EGD protocol

SETTINGS ⇨ PRODUCT SETUP ⇨⇩ COMMUNICATIONS ⇨⇩ EGD PROTOCOL

■ EGD PROTOCOL ■

⇔ **■ FAST PROD EXCH 1 ■ CONFIGURATION** See below

⇩ **■ SLOW PROD EXCH 1 ■ CONFIGURATION** See below

⇧ **■ SLOW PROD EXCH 2 ■ CONFIGURATION** See below

The F60 is provided with optional Ethernet Global Data (EGD) communications capability. This feature is specified as a software option at the time of ordering. See the Order Codes section in chapter 2 for details.

Ethernet Global Data (EGD) is a suite of protocols used for the real-time transfer of data for display and control purposes. The relay can be configured to 'produce' EGD data exchanges, and other devices can be configured to 'consume' EGD data exchanges. The number of produced exchanges (up to three), the data items in each exchange (up to 50), and the exchange production rate can be configured.

The relay supports one fast EGD exchange and two slow EGD exchanges. There are 20 data items in the fast-produced EGD exchange and 50 data items in each slow-produced exchange.

EGD cannot be used to transfer data between UR series relays. The relay supports EGD production only. An EGD exchange is not be transmitted unless the destination address is non-zero, and at least the first data item address is set to a valid Modbus register address. The default setting value of "0" is considered invalid.

Fast exchanges (50 to 1000 ms) are generally used in control schemes. The F60 has one fast exchange (exchange 1) and two slow exchanges (exchange 2 and 3).

The settings menu for the fast EGD exchange follows.

SETTINGS ⇨ PRODUCT SETUP ⇨⇩ COMMUNICATIONS ⇨⇩ EGD PROTOCOL⇨ FAST PROD EXCH 1 CONFIGURATION

■ FAST PROD EXCH 1 ■ CONFIGURATION

⇔ **EXCH 1 FUNCTION: Disable** Range: Disable, Enable

⇩ **EXCH 1 DESTINATION: 0.0.0.0** Range: standard IP address

⇩ **EXCH 1 DATA RATE: 1000 ms** Range: 50 to 1000 ms in steps of 1

⇩ **EXCH 1 DATA ITEM 1: 0** Range: 0 to 65535 in steps of 1 (Modbus register address range)

⇩

⇧ **EXCH 1 DATA ITEM 20: 0** Range: 0 to 65535 in steps of 1 (Modbus register address range)

The settings menu for the slow EGD exchanges follows.

SETTINGS ⇨ PRODUCT SETUP ⇨⇩ COMMUNICATIONS ⇨⇩ EGD PROTOCOL⇨ SLOW PROD EXCH 1(2) CONFIGURATION

■ SLOW PROD EXCH 1 ■ CONFIGURATION

⇔ **EXCH 1 FUNCTION: Disable** Range: Disable, Enable

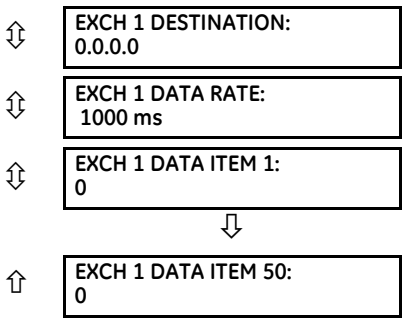

Slow EGD exchanges (500 to 1000 ms) are generally used for the transfer and display of data items. The settings for the fast and slow exchanges are as follows.

EXCH 1 DESTINATION — This setting specifies the destination IP address of the produced EGD exchange. This is usually unicast or broadcast.

EXCH 1 DATA RATE — This setting specifies the rate at which this EGD exchange is transmitted. If the setting is 50 ms, the exchange data is updated and sent once every 50 ms. If the setting is 1000 ms, the exchange data is updated and sent once per second. EGD exchange 1 has a setting range of 50 to 1000 ms. Exchanges 2 and 3 have a setting range of 500 to 1000 ms.

EXCH 1 DATA ITEM 1 to 20/50 — These settings specify the data items that are part of this EGD exchange. Almost any data from the F60 memory map can be configured to be included in an EGD exchange. The settings are the starting Modbus register address for the data item in decimal format. See the Modbus memory map in the UR Series Communications Guide for details. The Modbus memory map display shows addresses in hexadecimal format. Convert these hex values to decimal format before entering them as values for these setpoints.

To select a data item to be part of an exchange, it is only necessary to choose the starting Modbus address of the item. That is, for items occupying more than one Modbus register (for example, 32 bit integers and floating point values), only the first Modbus address is required. The EGD exchange configured with these settings contains the data items up to the first setting that contains a Modbus address with no data, or 0. That is, if the first three settings contain valid Modbus addresses and the fourth is 0, the produced EGD exchange contains three data items.

5.3.4.17 IEC 60870-5-103 protocol

SETTINGS ⇨ PRODUCT SETUP ⇨⇩ COMMUNICATIONS ⇨⇩ IEC 60870-5-103

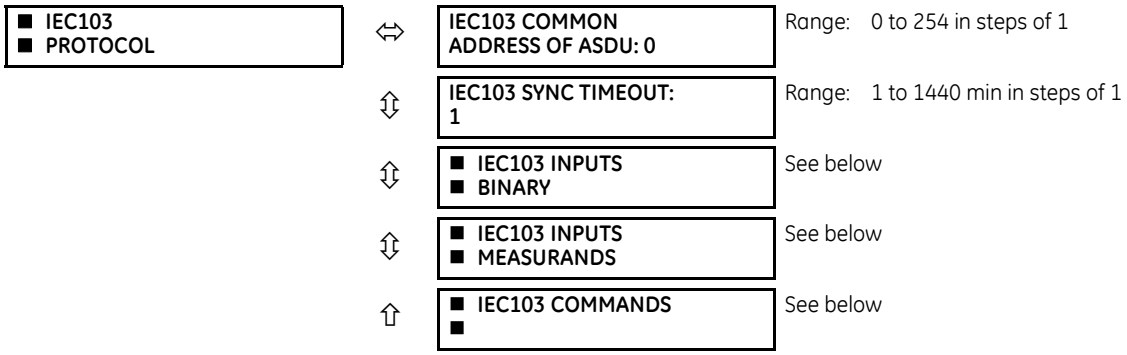

The F60 is provided with optional IEC 60870-5-103 communications capability. This feature is specified as a software option at the time of ordering. See the Order Codes section in chapter 2 for details.

IEC 60870-5-103 is a companion standard to the IEC 60870-5 suite of standards for transmission protocols. It defines messages and procedures for interoperability between protection equipment and devices of a control system in a substation for communicating on a serial line.

The IEC 60870-5-103 protocol is enabled when the **SETTINGS ⇨ PRODUCT SETUP ⇨⇩ COMMUNICATIONS ⇨ PROTOCOL** setting is set to IEC 60870-5-103.

The IEC 60870-5-103 is an unbalanced (master-slave) protocol for coded-bit serial communication, exchanging information with a control system. In the context of this protocol, the protection equipment is the slave and the control system is the master. The communication is based on a point-to-point principle. The master must be able to interpret the IEC 60870-5-103 communication messages.

The UR implementation of IEC 60870-5-103 consists of the following functions:

- Report binary inputs
- Report analog values (measurands)
- Commands
- Time synchronization

The RS485 port supports IEC 60870-5-103.

The UR Series Communications Guide contains more information on the protocol.

IEC103 COMMON ADDRESS OF ASDU — This setting uniquely defines this F60 on the serial line. Select an ID between 0 and 254. This ID does not need to be in sequential order for all stations that communicate with a controller, but it is recommended. Note that RS485 only allows a maximum of 32 slave stations on a communication line, so the entire range of 254 addresses is never exhausted.

IEC103 SYNC TIMEOUT — This setting defines the time that the F60 waits for a synchronization message. The F60 synchronizes its clock using all available sources, with the source synching more frequently overwriting the time of the other sources. Since the synchronization message received from the IEC 60870-5-103 master is less frequent than IRIG-B, PTP, or SNTP, its time is overwritten by these three sources, if any of them is active. If the synchronization timeout occurs and none of IRIG-B, PTP, or SNTP is active, the F60 sets the invalid bit in the time stamp of a time-tagged message.

The settings for the remaining menus are outlined as follows.

SETTINGS ⇨ PRODUCT SETUP ⇨⇩ COMMUNICATIONS ⇨⇩ IEC 60870-5-103 ⇨⇩ IEC103 INPUTS BINARY

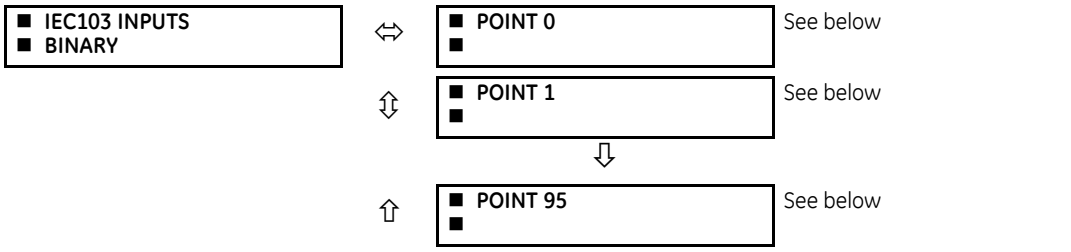

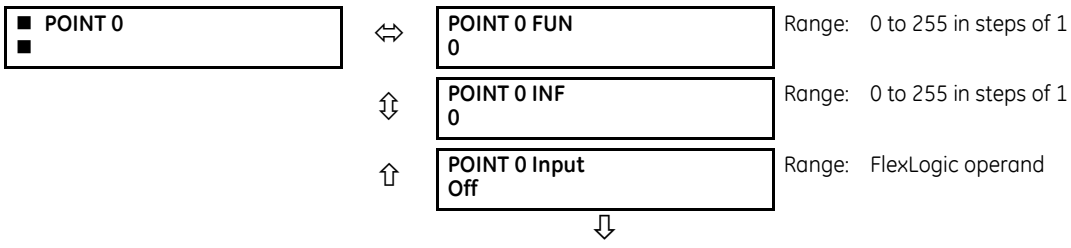

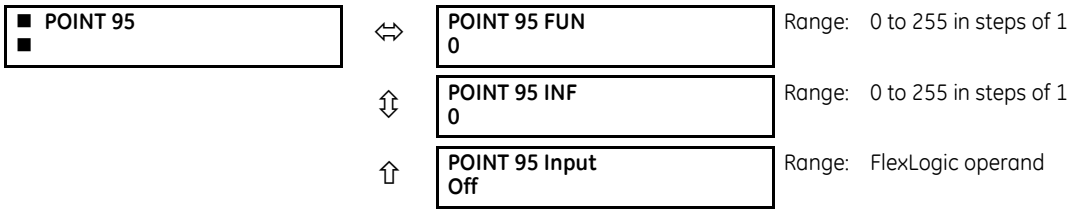

The binary input points are mapped using elements from a list of possible FlexLogic operands. A maximum of 96 binary inputs (points) can be mapped this way.

The IEC 60870-5-103 point list always starts with point 0 and ends at the first "Off" value. Since the IEC 60870-5-103 point list must be in a continuous block, any points assigned after the first "Off" point are ignored.

For each defined point, set appropriate values for the Function Type (FUN) and Information Number (INF), which form the Information Object Identifier field of the ASDU, as defined in IEC 60870-5-103.

The binary input points are sent as Class 1 data. They are sent either as a response to a general interrogation received from the controller or reported spontaneously. Spontaneous transmission occurs as a response to cyclic Class 2 requests. If the F60 wants to transmit Class 1 data at that time, it demands access for Class 1 data transmission (ACD=1 in the control field of the response).

For any change to take effect, restart the relay.

SETTINGS ⇨ PRODUCT SETUP ⇨⇩ COMMUNICATIONS ⇨⇩ IEC 60870-5-103 ⇨⇩ IEC103 INPUTS MEASURANDS

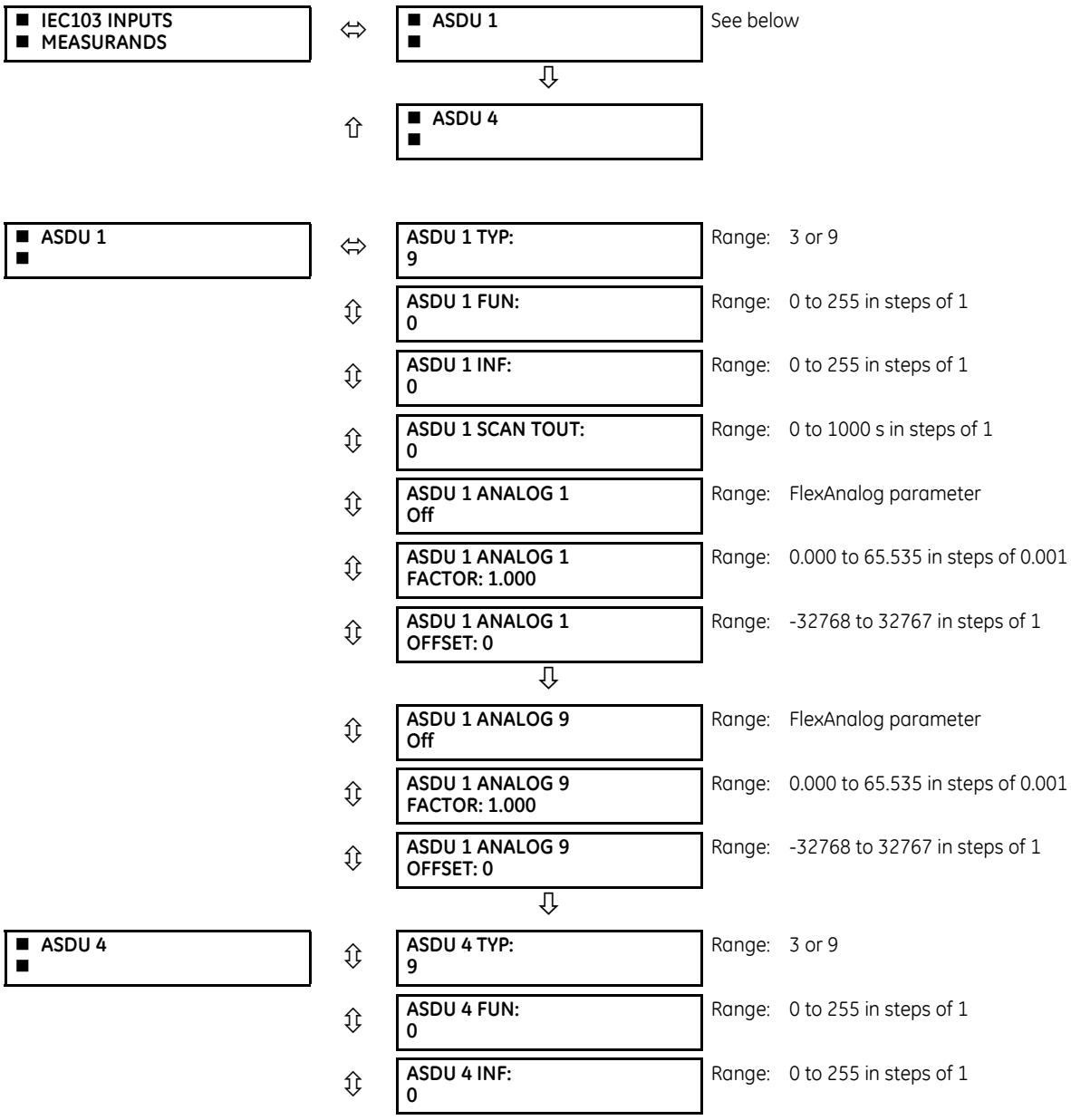

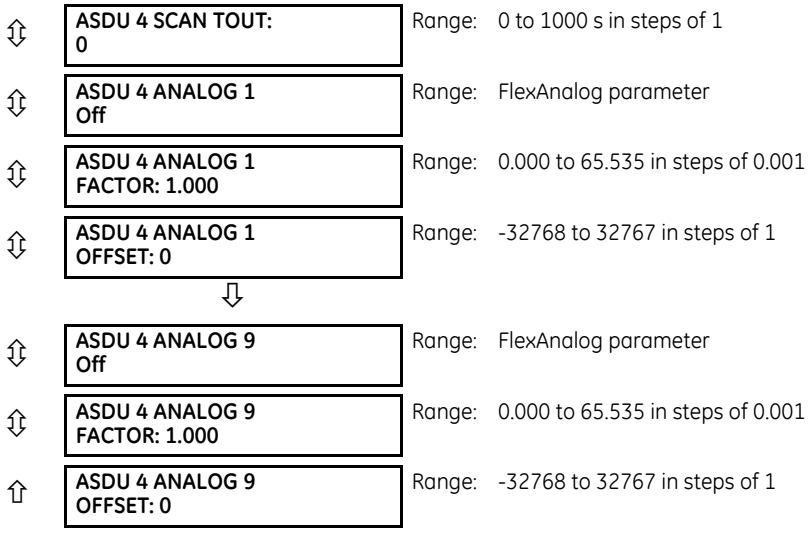

The configuration menu allows a maximum of four ASDUs containing measurands.

Measurands are sent as a response to Class 2 requests, which are cyclic requests coming from the master.

TYPE IDENTIFICATION (TYP) — The configuration field TYP indicates how many measurands are present in the corresponding ASDU. Each ASDU can take either 4 or 9 measurands maximum, depending on the type identification (3 respectively 9).

FUNCTION TYPE (FUN) and **INFORMATION NUMBER (INF)** — These two fields form the Information Object Identifier of the ASDU as defined in IEC 60870-103.

SCAN TIMEOUT (SCAN TOUT) — This is the cyclic period used by the F60 to decide when a measurand ASDU is included in a response. The measurand is sent as response to a Class 2 request when the corresponding timeout expires. The default value 0 means 500 ms.

ANALOG # — This field contains the actual measurand to be sent in the response to the master. The measurands can be mapped using elements from a list of FlexAnalog operands. The measurands sent are voltage, current, power, power factor, and frequency. If any other FlexAnalog is chosen, the F60 sends 0 instead of its value. Note that the power is transmitted in KW, not W. Measurands are transmitted as ASDU 3 or ASDU 9 (type identification value set to measurands I, respectively measurands II).

Each IEC 60870-5-103 measurands list ends at the first unconfigured ("Off") value. Any measurand assigned after the first "Off" value is ignored.

At least one measurand per ASDU must be configured in order to configure the following ASDU. For example, the user can configure only one measurand for each ASDU, but the user is not allowed to skip ASDU 2 and configure measurands in ASDU 3.

For any change to take effect, restart the relay.

ANALOG # FACTOR and **OFFSET** — For each measurand included in the ASDU, a factor and offset also can be configured. The factor and offset allow for scaling to be performed on measurands. The final measurement sent to the IEC 60870-103 master is then "a*x + b," where x is the measurand, a is the multiplying factor and b is the offset. The master has to perform the reversed operation in order to retrieve the actual value if such scaling is done. By default a = 1 and b = 0, so no scaling is done if these values are left at their defaults. Examples of when scaling is appropriate are as follows:

- If the measured value contains decimals and it is important to preserve the resolution. Since the format for transmitting the measurand does not permit decimals, a factor a>1 can be applied before transmission. For example, a frequency F=59.9Hz can be transmitted as Ft = 10 * F = 10 * 59.9 = 599. In this case a = 10, b = 0. The master receives 599 and has to divide by 10 to retrieve the real value 59.9.
- If the measured value is larger than what fits in the format defined in IEC 103. The format defined in the standard allows for signed integers up to 4095. By offsetting, unsigned integers up to 4096 + 4095 = 8191 are supported. Scaling using factors <1 can be required in such cases. The calculation is outlined in the IEC 60870-5-103 chapter of the UR Series Communications Guide. Two examples follow, where you decide factors a and b.

  Example 1: Nominal power Pn = 100 MW = 100000 KW (power is transmitted in KW)

Since P can be both positive and negative:
Transmitted power Pt = (4095/(Pn*2.4)) * P = (4095/(100000 * 2.4)) * P
= 0.017 * P
a = 0.017
b = 0
Pt = 0.017 * P
For a max power 100000 KW * 2.4 = 240000 KW, we transmit
Pt = 0.017 * 240000 = 4080
A value above 240 MW is indicated by overflow.

Example 2: Nominal voltage Vn = 500000 V
Since RMS voltage V can be only positive:
Transmitted voltage Vt = (8191/(Vn*2.4)) * V - 4096 =
= (8191/(500000 * 2.4)) * V - 4096 = 0.0068 * V - 4096
a = 0.0068
Since the step is in increments of 0.001, we round it at:
a = 0.006
b = -4096
Vt = 0.006 * V - 4096
For max voltage 500000 V * 2.4 = 1200000 V, we transmit
Vt = 0.006 * 1200000 - 4096 = 7200 - 4096 = 3104

SETTINGS ⇨ PRODUCT SETUP ⇨⇩ COMMUNICATIONS ⇨⇩ IEC 60870-5-103 ⇨⇩ IEC103 COMMANDS

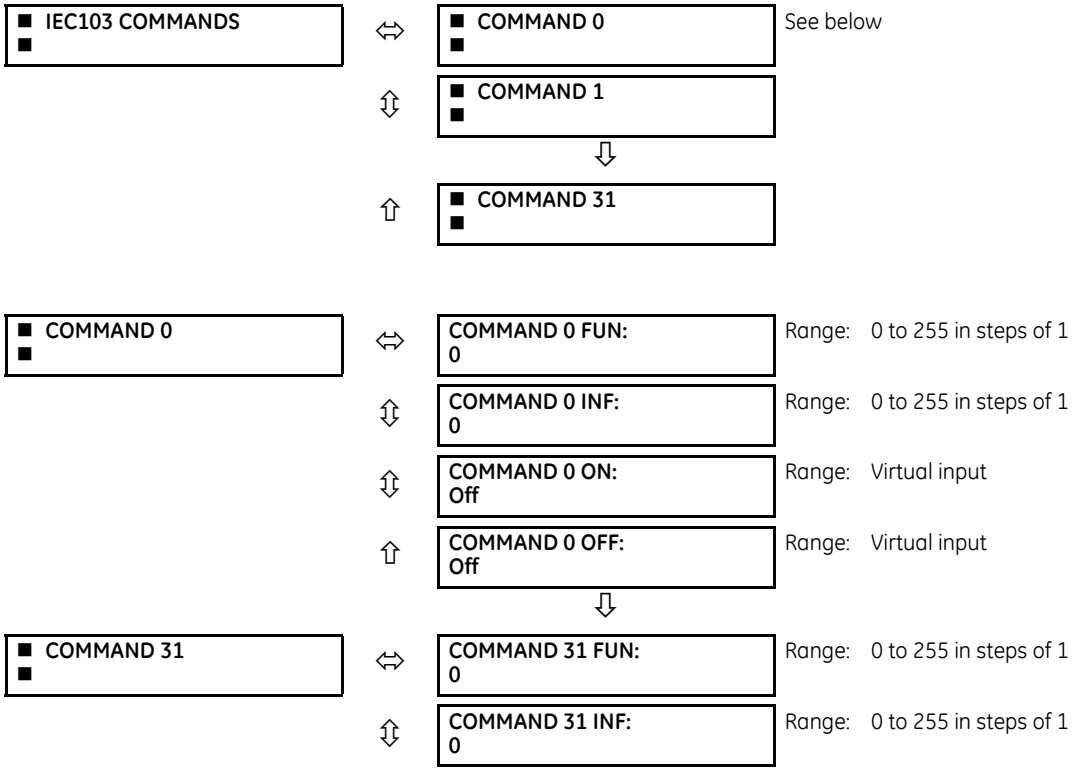

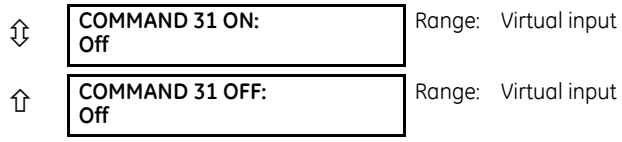

Commands are received as General Command (Type Identification 20). The user can configure the action to perform when an ASDU command comes.

A list of available mappings is provided on the F60. This includes 64 virtual inputs (see the following table). The ON and OFF for the same ASDU command can be mapped to different virtual inputs.

Each command is identified by the unique combination made by the function type (FUN) and information number (INF). If the master sends an ASDU command that does not have the FUN and INF of any configured command, the relay rejects it.

Table 5-11: Commands mapping table

Description	Value
Off	0
Virtual Input 1	1
Virtual Input 2	2
...	...
Virtual Input 64	64

For any change to take effect, restart the relay.

5.3.5 Modbus user map

SETTINGS ⇨ PRODUCT SETUP ⇨⇩ MODBUS USER MAP

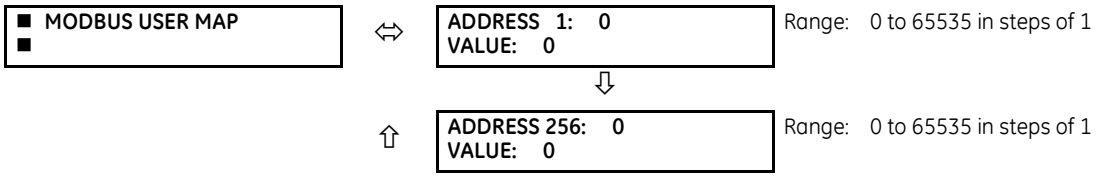

The Modbus user map provides read-only access for up to 256 registers. To obtain a memory map value, enter the address in the **ADDRESS** line (converted from hex to decimal format). The corresponding value (if programmed) displays in the **VALUE** line. A value of "0" in subsequent register **ADDRESS** lines automatically returns values for the previous **ADDRESS** lines incremented by 1. An address value of "0" in the initial register means "none" and values of "0" display for all registers. Different **ADDRESS** values can be entered as required in any of the register positions.

The UR Series Communications Guide outlines the Modbus memory map. The map is also viewable in a web browser; enter the IP address of the F60 in a web browser and click the option.

5.3.6 Real-time clock

5.3.6.1 Menu

SETTINGS ⇨ PRODUCT SETUP ⇨⇩ REAL TIME CLOCK

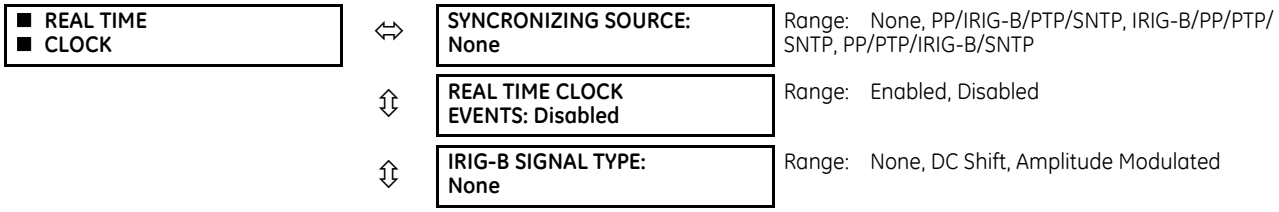

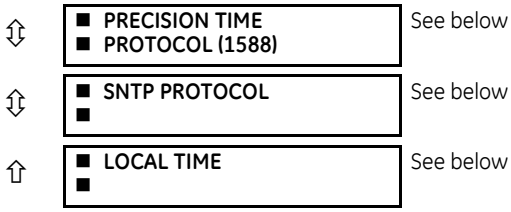

The relay contains a real time clock (RTC) to create timestamps for communications protocols as well as for historical data, such as event records and oscillography. When the relay restarts, the RTC initializes from an onboard battery-backed clock, which has the same accuracy as an electronic watch, approximately ±1 minute per month (~23 ppm). Once the RTC is synchronized with the Precision Time Protocol (PTP), IRIG-B, or SNTP, its accuracy approaches that of the synchronizing time delivered to the relay. While the RTC is not synchronized via PTP or IRIG-B, or the relay determines than it has an offset possibly greater than 10 µs from the international time standard, the CLOCK UNSYNCHRONIZED FlexLogic operand is activated.

The **SYNCHRONIZING SOURCE** setting displays when the relay includes the IEEE 1588 software option. The setting configures the priority sequence of the time synchronization source, to determine which of the available external time sources to use for time synchronization. A setting of None causes the RTC and the synchrophasor clock to free-run, and the clock can be changed from the front panel or from communications protocols. A setting of PP/IRIG-B/PTP/SNTP, IRIG-B/PP/PTP/SNTP, or PP/PTP/IRIG-B/SNTP causes the relay to track the first source named that is enabled and operational, or free-run if none of these are available. Here, PP means a time source that is strictly compliant with PP, and PTP means a time source that is not strictly compliant with PP. When a time source fails or recovers, the relay automatically transfers synchronization as required by this setting.

When the relay does not have the IEEE 1588 software option and this setting does not display, it uses IRIG-B when enabled and operational, then failing that SNTP when configured and operational, and otherwise it free-runs unless the clock is changed from the front panel or from communications protocols.

Setup for IRIG-B is illustrated in the Installation chapter.

Whenever a time synchronization message is received through any of the active protocols, the F60 clock updates. However, given that IEC 60870-5-103, IEC 60870-5-104, Modbus, and DNP are low-accuracy time synchronization methods, avoid their use for synchronization when better accuracy time protocols, such as IRIG-B and PTP are active in the system. If IRIG-B or PTP is used to update the relay clock, the other protocols (such as SNTP) are not allowed to update, even if active.

For version 7.32 and later in 7.3x, the SNTP priority includes other protocols, such as IEC 60870-5-103, IEC 60870-5-104, and DNP.

See the **COMMANDS ⇨ SET DATE AND TIME** menu section of this manual to manually set the RTC.

The **REAL TIME CLOCK EVENTS** setting allows changes to the date and/or time to be captured in the event record. The event records the RTC time before the adjustment. A Date/Time Changed event is generated when:

- The real time clock changed from SNTP/PTP/IRIG-B and the time difference is more than one second
- The real time clock changed from the front panel or via Modbus register. The relay always generates this event regardless of the time difference.
- The Daylight Saving Time (DST) setting gets enabled and the current relay time is already in the DST zone
- The real time clock enters or leaves DST

To enable IRIG-B synchronization, the input **IRIG-B SIGNAL TYPE** must be set to DC Shift or Amplitude Modulated. IRIG-B synchronization can be disabled by making this setting None.

To configure and enable PTP and/or SNTP, or to set local time parameters (for example time zone, daylight savings), use the following sections.

5.3.6.2 Precision time protocol (1588)

SETTINGS ⇨ PRODUCT SETUP ⇨⇩ REAL TIME CLOCK ⇨⇩ PRECISION TIME PROTOCOL (1588)

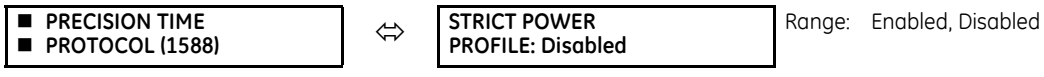

⇳	**PTP DOMAIN NUMBER:** **0**	Range: 0 to 255
⇳	**PTP VLAN PRIORITY:** **4**	Range: 0 to 7
⇳	**PTP VLAN ID:** **0**	Range: 0 to 4095
⇧	■ **PTP PORT 1** ■	See below

SETTINGS ⇨ PRODUCT SETUP ⇨⇩ REAL TIME CLOCK ⇨⇩ PRECISION TIME PROTOCOL (1588) ⇨⇩ PTP PORT 1(3)

■ **PTP PORT 1** ■		
⇳	**PORT 1 PTP FUNCTION:** **Disabled**	Range: Enabled, Disabled
⇳	**PORT 1 PATH DELAY ADDER: 0 ns**	Range: 0 to 60 000 ns in steps of 1
⇧	**PORT 1 PATH DELAY ASYMMETRY: 0 ns**	Range: –1 000 to +1 000 ns in steps of 1

The F60 is provided with optional Precision Time Protocol capability. This feature is specified as the IEEE 1588 software option at the time of ordering. See the Order Codes section in chapter 2 for details.

The F60 supports the Precision Time Protocol (PTP) specified in IEEE Std 1588 2008 using the Power Profile (PP) specified in IEEE Std C37.238 2011. This enables the relay to synchronize to the international time standard over an Ethernet network that implements PP.

The relay can be configured to operate on some PTP networks that are not strictly PP. Time accuracy can be less than specified for a PP network. Tolerated deviations from strict PP include 1) missing declaration of PP compliance in the messages, 2) connection to a network device that does not support the PTP peer delay mechanism, 3) jitter substantially greater than 1 µs in received event messages, and 4) certain non-compliant announce and sync message update rates.

The relay implements PTP according to IEEE Std 1588 2008 and the equivalent IEC 61588:2009(E), sometimes referred to as version 2 PTP. It does not support the previous version of the standard (version 1).

PTP is a protocol that allows multiple clocks in a network to synchronize with one another. It permits synchronization accuracies better than 1 ns, but this requires that each and every component in the network achieve very high levels of accuracy and a very high baud rate, faster than normally used for relay communications. When operating over a generic Ethernet network, time error can amount to 1 ms or more. PP is a profile of PTP which specifies a limited subset of PTP suitable for use in power system protection, control, automation, and data communication applications, and thereby facilitates interoperability between different vendor's clocks and switches. PP specifies a worst-case delivered time error of less than 1 µs over a 16-hop network.

In a PTP system and in a PP system, the clocks automatically organize themselves into a master-slave synchronization hierarchy with the "best" clock available making itself the "grandmaster" at the top of the hierarchy; all others make themselves "slaves" and track the grandmaster. Typically the grandmaster clock receives its time from GPS satellites or some other link to the international time standard. If the grandmaster fails, the next "best" clock available in the domain assumes the grandmaster role. When a clock on start-up discovers that it is "better" than the present grandmaster, it assumes the grandmaster role and the previous grandmaster reverts to slave. The F60 qualification mechanism accepts a potential master clock as a new grandmaster, when in a four-second interval it has received three announce messages from it, all better than the present grandmaster clock and better than any other announce in this interval.

Time messages issued by the grandmaster are delayed as they pass through the network both due to the finite speed of the signal in the interconnecting fiber or wire, and due to processing delays in the Ethernet switches. Each clock and switch implementing PP measures the propagation delay to each of its PP neighbors, and compensates for these delays in the time received. Each network device implementing PP measures the processing delay it introduces in each time message and compensates for this delay in the time it transmits. As a result, the time delivered to end-devices such as the UR are

virtually identical to the grandmaster time. If one of the network devices in the hierarchy does not fully implement PP, the associated propagation delay and/or latency may not be compensated for, and the time received at the end-device can be in error by more than 100 µs.

See the preceding Real Time Clock section for a description of when time values received via PTP are used to update the relay's real time clock.

The following settings are available for configuring the relay for PTP. The PTP menu displays only when the option was purchased.

STRICT POWER PROFILE — Power profile (IEEE Std C37.238 2011) requires that the relay only select a power profile compliant clock as a grandmaster, that the delivered time have worst-case error of ±1 µs, and that the peer delay mechanism be implemented. With the strict power profile setting enabled, the relay only selects as master the clocks displaying the IEEE_C37_238 identification codes. It uses a port only when the peer delay mechanism is operational. With the strict power profile setting disabled, the relay uses clocks without the power profile identification when no power profile clocks are present, and uses ports even if the peer delay mechanism is non-operational. This setting applies to all of the relay's PTP capable ports.

PTP DOMAIN NUMBER — Set this setting to the domain number of the grandmaster-capable clock(s) to be synchronized to. A network can support multiple time distribution domains, each distinguished with a unique domain number. More commonly, there is a single domain using the default domain number zero.

This setting applies to all of the relay's PTP capable ports.

PTP VLAN PRIORITY — This setting selects the value of the priority field in the 802.1Q VLAN tag in request messages issued by the relay's peer delay mechanism. In compliance with PP the default VLAN priority is 4, but it is recommended that it be set to 7 in accordance with PTP. Depending on the characteristics of the device to which the relay is linked directly, VLAN Priority can have no effect.

This setting applies to all of the relay's PTP capable ports.

PTP VLAN ID — This setting selects the value of the ID field in the 802.1Q VLAN tag in request messages issued by the relay's peer delay mechanism. It is provided in compliance with PP. As these messages have a destination address that indicates they are not to be bridged, their VLAN ID serves no function, and so can be left at its default value. Depending on the characteristics of the device to which the relay is linked directly, VLAN ID can have no effect. This setting applies to all of the relay's PTP capable ports.

PORT 1 ... 3 FUNCTION — While this port setting is selected to disabled, PTP is disabled on this port. The relay does not generate or listen to PTP messages on this port.

PORT 1 ... 3 PATH DELAY ADDER — The time delivered by PTP is advanced by the time value in this setting prior to the time being used to synchronize the relay's real time clock. This is to compensate to the extent practical for time delivery delays not compensated for in the network. In a fully compliant PP network, the peer delay and the processing delay mechanisms compensate for all the delays between the grandmaster and the relay. In such networks, make this setting zero.

In networks containing one or more switches and/or clocks that do not implement both of these mechanisms, not all delays are compensated, so the time of message arrival at the relay is later than the time indicated in the message. This setting can be used to approximately compensate for this delay. However, as the relay is not aware of network switching that dynamically changes the amount of uncompensated delay, there is no setting that always and completely corrects for uncompensated delay. A setting can be chosen that reduces the worst-case error to half of the range between minimum and maximum uncompensated delay, if these values are known.

PORT 1 ... 3 PATH DELAY ASSYMMETRY — This setting corresponds to "delayAsymmetry" in PTP, which is used by the peer delay mechanism to compensate for any difference in the propagation delay between the two directions of a link. Except in unusual cases, the two fibers are of essentially identical length and composition, so make this setting zero.

In unusual cases where the length of the link is different in different directions, set this setting to the number of nanoseconds the Ethernet propagation delay to the relay is longer than the mean of path propagation delays to and from the relay. For instance, if it is known say from the physical length of the fibers and the propagation speed in the fibers that the delay from the relay to the Ethernet switch it is connected to is 9000 ns and that the delay from the switch to the relay is 11000 ns, then the mean delay is 10000 ns, and the path delay asymmetry is 11000 - 10000 = +1000 ns.

5.3.6.3 SNTP protocol

SETTINGS ⇨ PRODUCT SETUP ⇨⇩ REAL TIME CLOCK ⇨⇩ SNTP PROTOCOL

■ SNTP PROTOCOL ■	⇔	SNTP FUNCTION: Disabled	Range: Enabled, Disabled
	⇩	SNTP SERVER IP ADDR: 0.0.0.0	Range: standard IP address format
	⇩	SNTP UDP PORT NUMBER: 123	Range: 0 to 65535 in steps of 1

The F60 supports the Simple Network Time Protocol specified in RFC-2030. With SNTP, the F60 can obtain clock time over an Ethernet network. The F60 acts as an SNTP client to receive time values from an SNTP/NTP server, usually a dedicated product using a GPS receiver. UR series relays support unicast, broadcast, multicast, and anycast SNTP functionality.

The **SNTP FUNCTION** setting enables or disables the SNTP feature on the F60.

To use SNTP in unicast mode, set **SNTP SERVER IP ADDR** to the SNTP/NTP server IP address. Once this address is set and **SNTP FUNCTION** is "Enabled," the F60 attempts to obtain time values from the SNTP/NTP server. Since many time values are obtained and averaged, it generally takes three to four minutes until the F60 clock is closely synchronized with the SNTP/NTP server. It takes up to two minutes for the F60 to signal an SNTP self-test error if the server is offline.

To use SNTP in broadcast mode, set the **SNTP SERVER IP ADDR** setting to "0.0.0.0" and **SNTP FUNCTION** to "Enabled." The F60 then listens to SNTP messages sent to the "all ones" broadcast address for the subnet. The F60 waits up to 18 minutes (>1024 seconds) without receiving an SNTP broadcast message before signaling an SNTP self-test error.

The **SNTP UDP PORT NUMBER** is 123 for normal SNTP operation. If SNTP is not required, close the port by setting the port number to 0, after which the change takes effect when the F60 is restarted.

NOTE

Do not set more than one protocol to the same TCP/UDP port number, as this results in unreliable operation of those protocols.

5.3.6.4 Local time

SETTINGS ⇨ PRODUCT SETUP ⇨⇩ REAL TIME CLOCK ⇨⇩ LOCAL TIME

■ LOCAL TIME ■	⇔	LOCAL TIME OFFSET FROM UTC: 0.0 hr	Range: –24.0 to 24.0 hr in steps of 0.5
	⇩	DAYLIGHT SAVINGS TIME: Disabled	Range: Disabled, Enabled
	⇩	DST START MONTH: January	Range: January to December (all months)
	⇩	DST START DAY: Sunday	Range: Sunday to Saturday (all days of the week)
	⇩	DST START DAY INSTANCE: First	Range: First, Second, Third, Fourth, Last
	⇩	DST START HOUR: 2:00	Range: 0:00 to 23:00
	⇩	DST STOP MONTH: January	Range: January to December (all months)
	⇩	DST STOP DAY: Sunday	Range: Sunday to Saturday (all days of the week)
	⇩	DST STOP DAY INSTANCE: First	Range: First, Second, Third, Fourth, Last
	⇩	DST STOP HOUR: 2:00	Range: 0:00 to 23:00

The F60 maintains two times: local time and Universal Coordinated Time (UTC). Local time can be provided by IRIG-B signals. UTC time is provided by SNTP servers.

The real-time clock (RTC) and timestamps reported in historical records and communication protocols can be incorrect if the Local Time settings are not configured properly.

See the IRIG-B section in the Installation chapter for guidance on these settings when using an IRIG-B source that sets the IRIG-B control bits according to IEEE Std 1344-1995.

LOCAL TIME OFFSET FROM UTC — Used to specify the local time zone offset from UTC (Greenwich Mean Time) in hours. Time zones in the eastern hemisphere have positive values; time zones in the western hemisphere have negative values. A value of zero causes the relay to use UTC for local time. This setting has two uses. When the system RTC is synchronized with a communications protocol providing only local time or it is free-running, the offset setting is used to calculate UTC from the local time these provide. When the RTC is synchronized with a communications protocol providing only UTC (such as PTP or SNTP), the time offset setting is used to determine local time from the UTC provided. PTP ALTERNATE_TIME_OFFSET_INDICATOR TLVs are not used to calculate local time.

DAYLIGHT SAVINGS TIME and **DST** — Can be used to allow the relay to follow the DST rules of the local time zone. Note that when IRIG-B time synchronization is active, the local time in the IRIG-B signal contains any daylight savings time offset and so the DST settings are ignored. Note that the following items do not include the DST: Time of Day Timer Start Time; Time of Day Timer Stop Time; Event Recorder Last Cleared Date; Source x Demand VAR Maximum Date; Source x Demand WATT Maximum Date; Source x Demand VA Maximum Date; Source x Demand Ia Maximum Date; Source x Demand Ib Maximum Date; Source x Demand Ic Maximum Date; PMU x Last Cleared Date; PMU One-Shot Time; Data Logger Newest Time; Data Logger Oldest Time; Oscillography Last Cleared Date; Last Settings Change Date; User Programmable Fault Report Cleared Date; Digital Counter x Frozen Time Stamp; HIZ RMS Capture x Time; and HIZ Capture x Time.

5.3.7 Fault reports

SETTINGS ⇨⇩ PRODUCT SETUP ⇨⇩ FAULT REPORTS ⇨⇩ FAULT REPORT 1

■ FAULT REPORT 1 ■	⇔	**FAULT REPORT 1 SOURCE: SRC 1**	Range: SRC 1, SRC 2, SRC 3, SRC 4
	⇩	**FAULT REPORT 1 TRIG: Off**	Range: FlexLogic operand
	⇩	**FAULT REPORT 1 Z1 MAG: 3.00 Ω**	Range: 0.01 to 250.00 ohms in steps of 0.01
	⇩	**FAULT REPORT 1 Z1 ANGLE: 75°**	Range: 25 to 90° in steps of 1
	⇩	**FAULT REPORT 1 Z0 MAG: 9.00 Ω**	Range: 0.01 to 650.00 ohms in steps of 0.01
	⇩	**FAULT REPORT 1 Z0 ANGLE: 75°**	Range: 25 to 90° in steps of 1
	⇩	**FAULT REPORT 1 LINE LENGTH UNITS: km**	Range: km, miles
	⇩	**FAULT REP 1 LENGTH (km): 100.0**	Range: 0.0 to 2000.0 in steps of 0.1
	⇩	**FAULT REPORT 1 VT SUBSTITUTION: None**	Range: None, I0, V0
	⇩	**FAULT REP 1 SYSTEM Z0 MAG: 2.00 Ω**	Range: 0.01 to 650.00 ohms in steps of 0.01
	⇧	**FAULT REP 1 SYSTEM Z0 ANGLE: 75°**	Range: 25 to 90° in steps of 1

The F60 relay supports one fault report and an associated fault locator. The signal source and trigger condition, as well as the characteristics of the line or feeder, are entered in this menu.

The fault report stores data, in non-volatile memory, pertinent to an event when triggered. The captured data contained in the FaultReport.txt file includes:

- Fault report number
- Name of the relay, programmed by the user
- Firmware revision of the relay
- Date and time of trigger
- Name of trigger (specific operand)
- Line or feeder ID via the name of a configured signal source
- Active setting group at the time of trigger
- Pre-fault current and voltage phasors (two cycles before either a 50DD disturbance associated with fault report source or the trigger operate). Once a disturbance is detected, pre-fault phasors hold for three seconds waiting for the fault report trigger. If trigger does not occur within this time, the values are cleared to prepare for the next disturbance.
- Fault current and voltage phasors (one cycle after the trigger)
- Elements operated at the time of triggering
- Events — Nine before trigger and seven after trigger (only available via the relay web page)
- Fault duration times for each breaker (created by the breaker arcing current feature)

The captured data also includes the fault type and the distance to the fault location, as well as the reclose shot number (when applicable). To include fault duration times in the fault report, enable and configure the breaker arcing current feature for each of the breakers. Fault duration is reported on a per-phase basis.

The relay allows locating faults, including ground faults, from delta-connected VTs. In this case, the missing zero-sequence voltage is substituted either by the externally provided neutral voltage (broken delta VT) connected to the auxiliary voltage channel of a VT bank, or by the zero-sequence voltage approximated as a voltage drop developed by the zero-sequence current, and user-provided zero-sequence equivalent impedance of the system behind the relay.

The trigger can be any FlexLogic operand, but in most applications it is expected to be the same operand, usually a virtual output, that is used to drive an output relay to trip a breaker. To prevent the overwriting of fault events, do not use the disturbance detector to trigger a fault report. A FAULT RPT TRIG event is automatically created when the report is triggered.

If a number of protection elements are ORed to create a fault report trigger, the first operation of any element causing the OR gate output to become high triggers a fault report. However, If other elements operate during the fault and the first operated element has not been reset (the OR gate output is still high), the fault report is not triggered again. Considering the reset time of protection elements, there is very little chance that a fault report can be triggered twice in this manner. As the fault report must capture a usable amount of pre and post-fault data, it cannot be triggered faster than every 20 ms.

Each fault report is stored as a file; the relay capacity is 15 files. A 16th trigger overwrites the oldest file.

The EnerVista software is required to view all captured data. The relay faceplate display can be used to view the date and time of trigger, the fault type, the distance location of the fault, and the reclose shot number.

The **FAULT REPORT 1 SOURCE** setting selects the source for input currents and voltages and disturbance detection.

The **FAULT 1 REPORT TRIG** setting assigns the FlexLogic operand representing the protection element/elements requiring operational fault location calculations. The distance to fault calculations are initiated by this signal. The **FAULT REPORT 1 Z1 MAG** and **FAULT REPORT 1 Z0 MAG** impedances are entered in secondary ohms.

The **FAULT REPORT 1 VT SUBSTITUTION** setting is set to "None" if the relay is fed from wye-connected VTs. If delta-connected VTs are used, and the relay is supplied with the neutral (3V0) voltage, this setting is set to "V0". The method is still exact, as the fault locator combines the line-to-line voltage measurements with the neutral voltage measurement to re-create the line-to-ground voltages. See the **ACTUAL VALUES ⇨⇩ RECORDS ⇨ FAULT REPORTS** menu for details. It is required to configure the delta and neutral voltages under the source indicated as input for the fault report. Also, the relay checks if the auxiliary signal configured is marked as "Vn" by the user (under VT setup) and inhibits the fault location if the auxiliary signal is labeled differently.

If the broken-delta neutral voltage is not available to the relay, an approximation is possible by assuming the missing zero-sequence voltage to be an inverted voltage drop produced by the zero-sequence current and the user-specified equivalent zero-sequence system impedance behind the relay: $V0 = -Z0 \times I0$. In order to enable this mode of operation, the **FAULT REPORT 1 VT SUBSTITUTION** setting is set to "I0".

The **FAULT REP 1 SYSTEM Z0 MAG** and **FAULT REP 1 SYSTEM Z0 ANGLE** settings are used only when the **VT SUBSTITUTION** setting value is "I0". The magnitude is to be entered in secondary ohms. This impedance is an average system equivalent behind the relay. It can be calculated as zero-sequence Thevenin impedance at the local bus with the protected line/feeder disconnected. The method is accurate only if this setting matches perfectly the actual system impedance during the fault. If the system exhibits too much variability, this approach is questionable and the fault location results for single-line-to-ground faults is trusted accordingly. Keep in mind that grounding points in the vicinity of the installation impact the system zero-sequence impedance (grounded loads, reactors, zig-zag transformers, shunt capacitor banks, and so on).

5.3.8 Oscillography

5.3.8.1 Menu

SETTINGS ⇨ PRODUCT SETUP ⇨⇩ OSCILLOGRAPHY

■ OSCILLOGRAPHY ■	⇔	NUMBER OF RECORDS: 5 — Range: 3 to 64 in steps of 1
	⇳	TRIGGER MODE: Automatic Overwrite — Range: Automatic Overwrite, Protected
	⇳	TRIGGER POSITION: 50% — Range: 0 to 100% in steps of 1
	⇳	TRIGGER SOURCE: Off — Range: FlexLogic operand
	⇳	AC INPUT WAVEFORMS: 16 samples/cycle — Range: Off; 8, 16, 32, 64 samples/cycle
	⇳	■ DIGITAL CHANNELS ■ — See below
	⇳	■ ANALOG CHANNELS ■ — See below

Oscillography records contain waveforms captured at the sampling rate as well as other relay data at the point of trigger. Oscillography records are triggered by a programmable FlexLogic operand. Multiple oscillography records can be captured simultaneously.

When EnerVista UR Setup creates a new settings file, a Smart defaults feature automatically enters a basic oscillography configuration. The basic configuration changes the factory default values to make the number of samples per cycle 32, adds a selection of digital and analog channels that are often of interest, and adds a FlexLogic equation to trigger oscillography. Review and update this basic configuration as required for the application at hand.

The **NUMBER OF RECORDS** is selectable, but the number of cycles captured in a single record varies considerably based on other factors, such as sample rate and the number of operational modules. There is a fixed amount of data storage for oscillography; the more data captured, the less the number of cycles captured per record. See the **ACTUAL VALUES ⇨⇩ RECORDS ⇨⇩ OSCILLOGRAPHY** menu to view the number of cycles captured per record. The following table provides sample configurations with corresponding cycles/record. The minimum number of oscillographic records is three.

Table 5-12: Oscillography cycles/record example

Records	CT/VTs	Sample rate	Digital channels	Analog channels	Cycles per record
3	1	32	32	16	2399
3	1	64	32	16	1450
16	1	32	32	16	666
16	1	64	32	16	402
32	1	32	32	16	352
32	1	64	32	16	213
3	2	32	32	16	1516
3	2	64	32	16	851
16	2	32	32	16	421

TRIGGER MODE — A new record automatically overwrites an older record when **TRIGGER MODE** is set to "Automatic Overwrite."

TRIGGER POSITION — Set this to a percentage of the total buffer size (for example, 10%, 50%, 75%, and so on). A trigger position of 25% consists of 25% pre- and 75% post-trigger data.

TRIGGER SOURCE — Always captured in oscillography and can be any FlexLogic parameter (element state, contact input, virtual output, and so on). The relay sampling rate is 64 samples per cycle.

AC INPUT WAVEFORMS — Determines the sampling rate at which AC input signals (that is, current and voltage) are stored. Reducing the sampling rate allows longer records to be stored. This setting has no effect on the internal sampling rate of the relay, which is always 64 samples per cycle. That is, it has no effect on the fundamental calculations of the device.

When changes are made to the oscillography settings, all existing oscillography records are cleared.

5.3.8.2 Digital channels

SETTINGS ⇨ PRODUCT SETUP ⇨⇩ OSCILLOGRAPHY ⇨⇩ DIGITAL CHANNELS

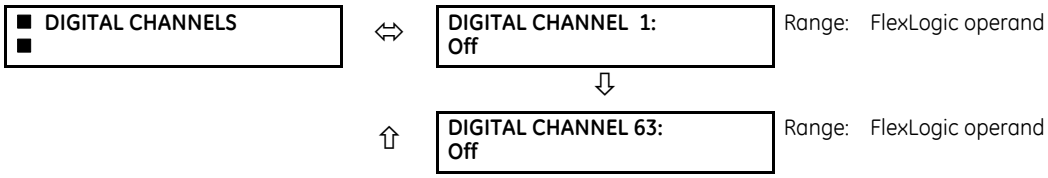

DIGITAL 1(63) CHANNEL — This setting selects the FlexLogic operand state recorded in an oscillography trace. The length of each oscillography trace depends in part on the number of parameters selected here. Parameters set to "Off" are ignored.

5.3.8.3 Analog channels

SETTINGS ⇨ PRODUCT SETUP ⇨⇩ OSCILLOGRAPHY ⇨⇩ ANALOG CHANNELS

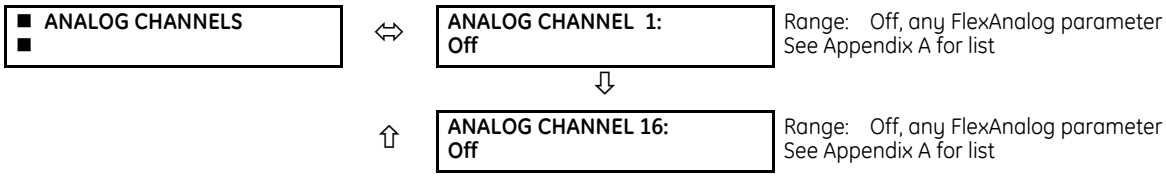

These settings select the metering actual value recorded in an oscillography trace. The length of each oscillography trace depends in part on the number of parameters selected here. Parameters set to "Off" are ignored. The parameters available in a given relay depend on

- the type of relay,

- the type and number of CT/VT hardware modules installed, and
- the type and number of analog input hardware modules installed

A list of all possible analog metering actual value parameters is presented in Appendix A: FlexAnalog Parameters. The parameter index number shown in any of the tables is used to expedite the selection of the parameter on the relay display. It can be time-consuming to scan through the list of parameters via the relay keypad and display — entering this number via the relay keypad causes the corresponding parameter to display.

All eight CT/VT module channels are stored in the oscillography file. The CT/VT module channels are named as follows:

<slot_letter><terminal_number>—<I or V><phase A, B, or C, or 4th input>

The fourth current input in a bank is called IG, and the fourth voltage input in a bank is called VX. For example, F2-IB designates the IB signal on terminal 2 of the CT/VT module in slot F.

If there are no CT/VT modules and analog input modules, no analog traces appear in the file; only the digital traces appear.

The source harmonic indices appear as oscillography analog channels numbered from 0 to 23. These correspond directly to the to the 2nd to 25th harmonics in the relay as follows:

Analog channel 0 ↔ 2nd harmonic
Analog channel 1 ↔ 3rd harmonic
...
Analog channel 23 ↔ 25th harmonic

5.3.9 Data logger

SETTINGS ⇨⇩ PRODUCT SETUP ⇨⇩ DATA LOGGER

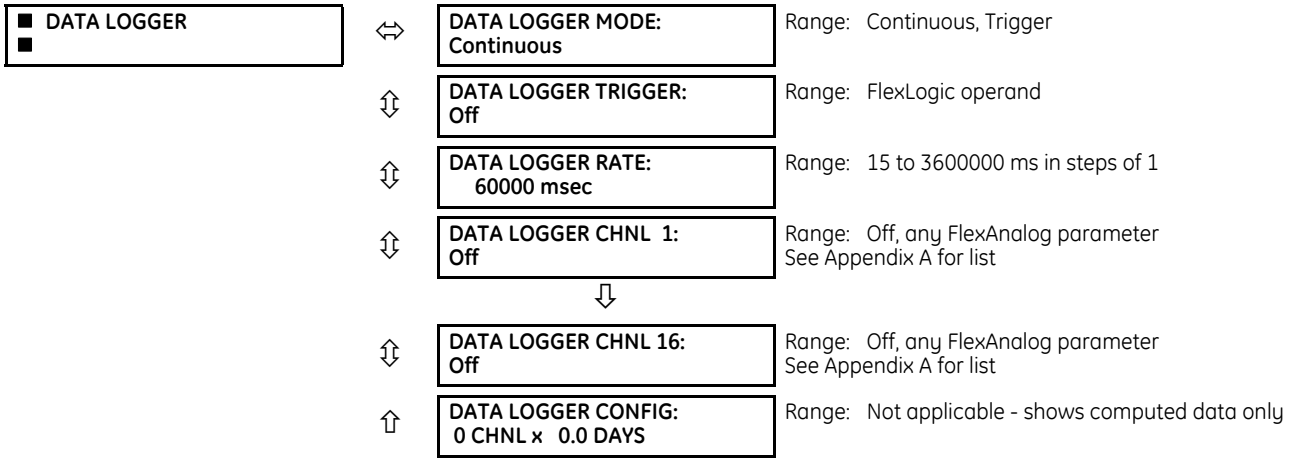

The data logger samples and records up to 16 analog parameters at a user-defined sampling rate. This recorded data can be downloaded to EnerVista UR Setup and displayed with parameters on the vertical axis and time on the horizontal axis. All data is stored in non-volatile memory, so the information is retained when power to the relay is lost.

For a fixed sampling rate, the data logger can be configured with a few channels over a long period or a larger number of channels for a shorter period. The relay automatically partitions the available memory between the channels in use. The following table outlines examples of storage capacities for a system frequency of 60 Hz.

Table 5-13: Data logger storage capacity example

Sampling rate	Channels	Days	Storage capacity
15 ms	1	0.1	954 s
	8	0.1	120 s
	9	0.1	107 s
	16	0.1	60 s
1000 ms	1	0.7	65457 s
	8	0.1	8182 s
	9	0.1	7273 s
	16	0.1	4091 s
60000 ms	1	45.4	3927420 s
	8	5.6	490920 s
	9	5	436380 s
	16	2.8	254460 s
3600000 ms	1	2727.5	235645200 s
	8	340.9	29455200 s
	9	303	26182800 s

NOTE

Changing any setting affecting data logger operation clears data in the log.

DATA LOGGER MODE — This setting configures the mode in which the data logger operates. When set to "Continuous," the data logger actively records any configured channels at the rate as defined by the **DATA LOGGER RATE**. The data logger is idle in this mode when no channels are configured. When set to "Trigger," the data logger records any configured channels at the instance of the rising edge of the **DATA LOGGER TRIGGER** source FlexLogic operand. The data logger ignores all subsequent triggers and continues to record data until the active record is full. Once the data logger is full, a CLEAR DATA LOGGER command is required to clear the data logger record before a new record can be started. Performing the CLEAR DATA LOGGER command also stops the current record and resets the data logger to be ready for the next trigger.

DATA LOGGER TRIGGER — This setting selects the signal used to trigger the start of a new data logger record. Any FlexLogic operand can be used as the trigger source. This setting only applies when the mode is set to "Trigger."

DATA LOGGER RATE — This setting selects the time interval at which the actual value data is recorded.

DATA LOGGER CHNL 1(16) — This setting selects the metering actual value that is to be recorded in Channel 1(16) of the data log. The parameters available in a given relay are dependent on: the type of relay, the type and number of CT/VT hardware modules installed, and the type and number of Analog Input hardware modules installed. Upon startup, the relay automatically prepares the parameter list. A list of all possible analog metering actual value parameters is shown in Appendix A: FlexAnalog Parameters. The parameter index number shown in any of the tables is used to expedite the selection of the parameter on the relay display. It can be time-consuming to scan through the list of parameters via the relay keypad/display—entering this number via the relay keypad causes the corresponding parameter to display.

DATA LOGGER CONFIG — This display presents the total amount of time that the Data Logger can record the channels not selected to "Off" without overwriting old data.

5.3.10 Demand

SETTINGS ⇨⇩ PRODUCT SETUTP ⇨⇩ DEMAND

■ **DEMAND** ■	⇔	**CRNT DEMAND METHOD: Thermal Exponential**	Range: Thermal Exponential, Block Interval, Rolling Demand
	⇳	**POWER DEMAND METHOD: Thermal Exponential**	Range: Thermal Exponential, Block Interval, Rolling Demand

⇳	**DEMAND INTERVAL:** **15 MIN**	Range: 5, 10, 15, 20, 30, 60 minutes
⇧	**DEMAND TRIGGER:** **Off**	Range: FlexLogic operand Note: for calculation using method 2a

The relay measures current demand on each phase, and three-phase demand for real, reactive, and apparent power. Current and Power methods can be chosen separately for the convenience of the user. Settings are provided to allow the user to emulate common electrical utility demand measuring techniques, for statistical or control purposes. If the **CRNT DEMAND METHOD** is set to "Block Interval" and the **DEMAND TRIGGER** is set to "Off," Method 2 is used as follows. If **DEMAND TRIGGER** is assigned to any other FlexLogic operand, Method 2a is used as follows.

The relay can be set to calculate demand by any of the following three methods.

5.3.10.1 Calculation method 1: Thermal exponential

This method emulates the action of an analog peak-recording thermal demand meter. The relay measures the quantity (RMS current, real power, reactive power, or apparent power) on each phase every second and assumes that the circuit quantity remains at this value until updated by the next measurement. It calculates the 'thermal demand equivalent' based on the following equation:

$$d(t) = D(1 - e^{-kt}) \qquad \textbf{Eq. 5-6}$$

where

d = demand value after applying input quantity for time t (in minutes)
D = input quantity (constant)
k = 2.3 / thermal 90% response time

The figure shows the 90% thermal response time characteristic of 15 minutes. A setpoint establishes the time to reach 90% of a steady-state value, just as the response time of an analog instrument. A steady state value applied for twice the response time indicates 99% of the value.

Figure 5-31: Thermal demand characteristic

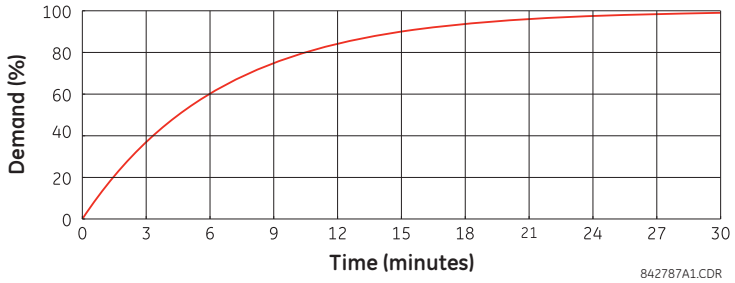

5.3.10.2 Calculation method 2: Block interval

This method calculates a linear average of the quantity (RMS current, real power, reactive power, or apparent power) over the programmed demand time interval, starting daily at 00:00:00 (that is, 12:00 am). The 1440 minutes per day is divided into the number of blocks as set by the programmed time interval. Each new value of demand becomes available at the end of each time interval.

5.3.10.3 Calculation method 2a: Block interval (with start demand interval logic trigger)

This method calculates a linear average of the quantity (RMS current, real power, reactive power, or apparent power) over the interval between successive Start Demand Interval logic input pulses. Each new value of demand becomes available at the end of each pulse. Assign a FlexLogic operand to the **DEMAND TRIGGER** setting to program the input for the new demand interval pulses.

NOTE

If no trigger is assigned in the **DEMAND TRIGGER** setting and the **CRNT DEMAND METHOD** is "Block Interval," use calculation method 2. If a trigger is assigned, the maximum allowed time between two trigger signals is 60 minutes. If no trigger signal appears within 60 minutes, demand calculations are performed and available, and the algorithm resets and starts the new cycle of calculations. The minimum required time for trigger contact closure is 20 µs.

5.3.10.4 Calculation method 3: Rolling demand

This method calculates a linear average of the quantity (RMS current, real power, reactive power, or apparent power) over the programmed demand time interval, in the same way as Block Interval. The value is updated every minute and indicates the demand over the time interval just preceding the time of update.

5.3.11 User-programmable LEDs

5.3.11.1 Menu

SETTINGS ⇨ PRODUCT SETUP ⇨⇩ USER-PROGRAMMABLE LEDS

■ USER-PROGRAMMABLE LEDS	⇔ ■ LED TEST ■	See below
	⇩ ■ TRIP & ALARM LEDS ■	See page 5-97
	⇩ ■ USER-PROGRAMMABLE LED 1	See page 5-97
	⇩	
	⇧ ■ USER-PROGRAMMABLE LED 48	

The 48 amber LEDs on relay panels 2 and 3 can be customized to illuminate when a selected FlexLogic operand is in the logic 1 state. The trip and alarm LEDs on panel 1 can also be customized in a similar manner. To ensure correct functionality of all LEDs, an LED test feature is also provided.

5.3.11.2 LED test

SETTINGS ⇨ PRODUCT SETUP ⇨⇩ USER-PROGRAMMABLE LEDS ⇨ LED TEST

■ LED TEST ■	⇔ LED TEST FUNCTION: Disabled	Range: Disabled, Enabled
	⇧ LED TEST CONTROL: Off	Range: FlexLogic operand

When enabled, the LED test can be initiated from any digital input or user-programmable condition, such as a user-programmable pushbutton. The control operand is configured under the **LED TEST CONTROL** setting. The test covers all LEDs, including the LEDs of the optional user-programmable pushbuttons.

The test consists of the following three stages:

1. All 62 LEDs on the relay are illuminated. This is a quick test to verify if any of the LEDs is “burned.” This stage lasts as long as the control input is on, up to a maximum of 1 minute. After 1 minute, the test ends.
2. All the LEDs are turned off, and then one LED at a time turns on for 1 second, then back off. The test routine starts at the top left panel, moving from the top to bottom of each LED column. This test checks for hardware failures that lead to more than one LED being turned on from a single logic point. This stage can be interrupted at any time.
3. All the LEDs are turned on. One LED at a time turns off for 1 second, then back on. The test routine starts at the top left panel moving from top to bottom of each column of the LEDs. This test checks for hardware failures that lead to more than one LED being turned off from a single logic point. This stage can be interrupted at any time.

When testing is in progress, the LEDs are controlled by the test sequence, rather than the protection, control, and monitoring features. However, the LED control mechanism accepts all the changes to LED states generated by the relay and stores the actual LED states (on or off) in memory. When the test completes, the LEDs reflect the actual state resulting from relay response during testing. The reset pushbutton does not clear any targets when the LED Test is in progress.

A dedicated FlexLogic operand, LED TEST IN PROGRESS, is set for the duration of the test. When the test sequence is initiated, the LED TEST INITIATED event is stored in the event recorder.

The entire test procedure is user-controlled. In particular, stage 1 can last as long as necessary, and stages 2 and 3 can be interrupted. The test responds to the position and rising edges of the control input defined by the **LED TEST CONTROL** setting. The control pulses must last at least 250 ms to take effect. The following diagram explains how the test is executed.

Figure 5-32: LED test sequence

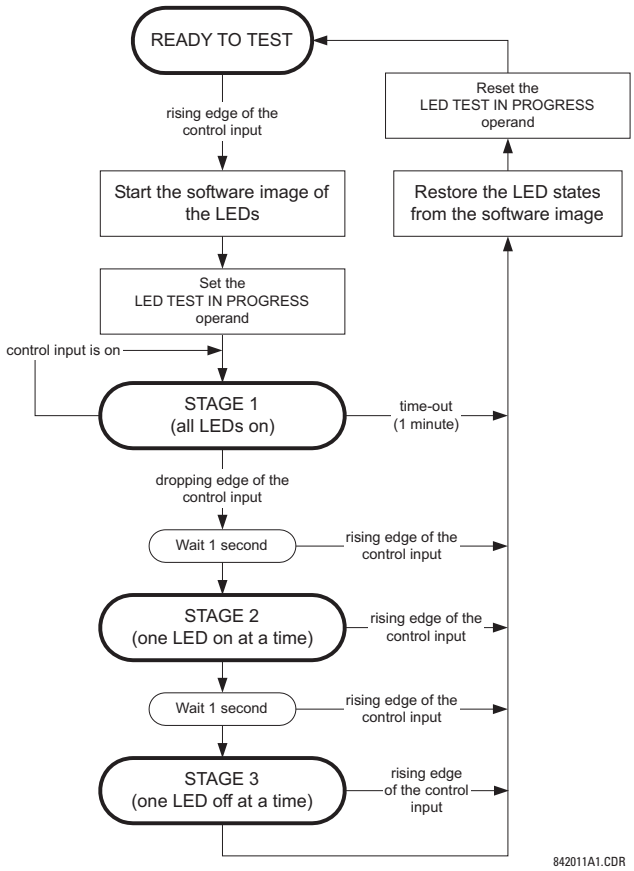

Application example 1

Assume one needs to check if any of the LEDs is "burned" through user-programmable pushbutton 1. Apply the following settings.

Configure user-programmable pushbutton 1 by making the following entries in the **SETTINGS ⇨ PRODUCT SETUP ⇨⇩ USER-PROGRAMMABLE PUSHBUTTONS ⇨ USER PUSHBUTTON 1** menu. (The option does not display when not purchased.)

PUSHBUTTON 1 FUNCTION: "Self-reset"
PUSHBTN 1 DROP-OUT TIME: "0.10 s"

Configure the LED test to recognize user-programmable pushbutton 1 by making the following entries in the **SETTINGS ⇨ PRODUCT SETUP ⇨⇩ USER-PROGRAMMABLE LEDS ⇨ LED TEST** menu:

LED TEST FUNCTION: "Enabled"
LED TEST CONTROL: "PUSHBUTTON 1 ON"

The test is initiated when the user-programmable pushbutton 1 is pressed. Keep the pushbutton pressed for as long as the LEDs are being visually inspected. When finished, release the pushbutton. The relay then automatically starts stage 2. At this point, test can be cancelled by pressing the pushbutton.

Application example 2

Assume one needs to check if any LEDs are "burned" as well as exercise one LED at a time to check for other failures. This is to be performed via user-programmable pushbutton 1.

After applying the settings in application example 1, hold down the pushbutton as long as necessary to test all LEDs. When finished, release the pushbutton so that the relay then automatically starts stage 2. When stage 2 is completed, stage 3 starts automatically. The test can be cancelled at any time by pressing the pushbutton.

5.3.11.3 Trip and alarm LEDs

SETTINGS ⇨ PRODUCT SETUP ⇨⇩ USER-PROGRAMMABLE LEDS ⇨⇩ TRIP & ALARMS LEDS

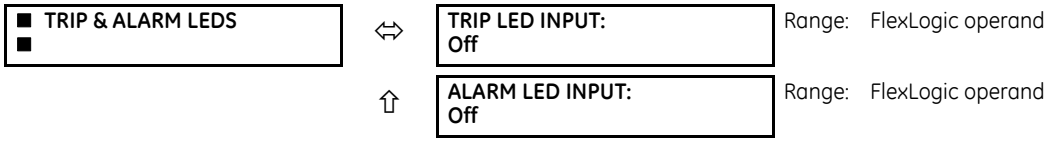

The trip and alarm LEDs are in the first LED column (enhanced faceplate) and on LED panel 1 (basic faceplate). Each indicator can be programmed to become illuminated when the selected FlexLogic operand is in the logic 1 state.

5.3.11.4 User-programmable LED 1(48)

SETTINGS ⇨ PRODUCT SETUP ⇨⇩ USER-PROGRAMMABLE LEDS ⇨⇩ USER-PROGRAMMABLE LED 1(48)

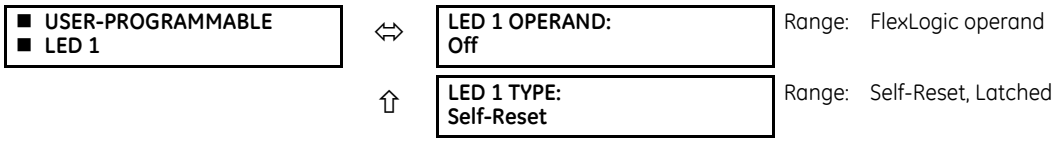

There are 48 amber LEDs across the relay faceplate LED panels. Each of these indicators can be programmed to illuminate when the selected FlexLogic operand is in the logic 1 state.

For the basic faceplate, the LEDs are located as follows:

- LED Panel 2 — User-programmable LEDs 1 through 24
- LED Panel 3 — User programmable LEDs 25 through 48

For the enhanced faceplate, the LEDs are located as follows:

- LED column 2 — User-programmable LEDs 1 through 12
- LED column 3 — User-programmable LEDs 13 through 24
- LED column 4 — User-programmable LEDs 25 through 36
- LED column 5 — User-programmable LEDs 37 through 48

See the LED Indicators section in chapter 4 for information on the location of these indexed LEDs.

The user-programmable LED settings select the FlexLogic operands that control the LEDs. If the **LED 1 TYPE** setting is "Self-Reset" (the default setting), the LED illumination tracks the state of the selected LED operand. If the **LED 1 TYPE** setting is "Latched," the LED, once lit, remains so until reset by the faceplate **RESET** button, from a remote device via a communications channel, or from any programmed operand, even if the LED operand state de-asserts.

Table 5-14: Recommended settings for user-programmable LEDs

Setting	Parameter	Setting	Parameter
LED 1 operand	SETTING GROUP ACT 1	LED 13 operand	Off
LED 2 operand	SETTING GROUP ACT 2	LED 14 operand	BREAKER 2 OPEN
LED 3 operand	SETTING GROUP ACT 3	LED 15 operand	BREAKER 2 CLOSED
LED 4 operand	SETTING GROUP ACT 4	LED 16 operand	BREAKER 2 TROUBLE
LED 5 operand	SETTING GROUP ACT 5	LED 17 operand	SYNC 1 SYNC OP
LED 6 operand	SETTING GROUP ACT 6	LED 18 operand	SYNC 2 SYNC OP
LED 7 operand	Off	LED 19 operand	Off
LED 8 operand	Off	LED 20 operand	Off
LED 9 operand	BREAKER 1 OPEN	LED 21 operand	AR ENABLED
LED 10 operand	BREAKER 1 CLOSED	LED 22 operand	AR DISABLED
LED 11 operand	BREAKER 1 TROUBLE	LED 23 operand	AR RIP
LED 12 operand	Off	LED 24 operand	AR LO

See the figure in the Setting Groups section of the Control Elements section later in this chapter for an example of group activation.

5.3.12 User-programmable self-tests

SETTINGS ⇨ PRODUCT SETUP ⇨⇩ USER-PROGRAMMALBE SELF TESTS

■ USER-PROGRAMMABLE ■ SELF TESTS	⇔	DIRECT RING BREAK FUNCTION: Enabled	Range: Disabled, Enabled. Valid for units equipped with Direct Input/Output module.
	⇳	DIRECT DEVICE OFF FUNCTION: Enabled	Range: Disabled, Enabled. Valid for units equipped with Direct Input/Output module.
	⇳	REMOTE DEVICE OFF FUNCTION: Enabled	Range: Disabled, Enabled
	⇳	FIRST ETHERNET FAIL FUNCTION: Disabled	Range: Disabled, Enabled
	⇳	SEC. ETHERNET FAIL FUNCTION: Disabled	Range: Disabled, Enabled
	⇳	THIRD ETHERNET FAIL FUNCTION: Disabled	Range: Disabled, Enabled
	⇳	BATTERY FAIL FUNCTION: Enabled	Range: Disabled, Enabled
	⇳	SNTP FAIL FUNCTION: Enabled	Range: Disabled, Enabled
	⇳	IRIG-B FAIL FUNCTION: Enabled	Range: Disabled, Enabled
	⇳	PTP FAIL FUNCTION: Enabled	Range: Disabled, Enabled
	⇧	SFP MODULE FAIL FUNCTION: Disabled	Range: Disabled, Enabled

All major self-test alarms are reported automatically with their corresponding FlexLogic operands, events, and targets. Most of the minor alarms can be disabled if so wanted.

When in the Disabled mode, minor alarms do not assert a FlexLogic operand, write to the event recorder, or display target messages. Moreover, they do not trigger the ANY MINOR ALARM or ANY SELF-TEST messages. When in Enabled mode, minor alarms continue to function along with other major and minor alarms. See the Relay Self-tests section in chapter 7 for information on major and minor self-test alarms.

5.3.13 Control pushbuttons

SETTINGS ⇨ PRODUCT SETUP ⇨⇩ CONTROL PUSHBUTTONS ⇨ CONTROL PUSHBUTTON 1(7)

■ CONTROL ■ PUSHBUTTON 1	⇔	**CONTROL PUSHBUTTON 1 FUNCTION: Disabled**	Range: Disabled, Enabled
	⇧	**CONTROL PUSHBUTTON 1 EVENTS: Disabled**	Range: Disabled, Enabled

There are three standard control pushbuttons, labeled USER 1, USER 2, and USER 3, on the basic and enhanced front panels. These are user-programmable and can be used for various applications such as performing an LED test, switching setting groups, and invoking and scrolling though user-programmable displays.

Firmware revisions 3.2x and older use these three pushbuttons for manual breaker control. This functionality has been retained—if the breaker control feature is configured to use the three pushbuttons, they cannot be used as user-programmable control pushbuttons.

The locations of the control pushbuttons are shown in the following figures.

Figure 5-33: Control pushbuttons (enhanced faceplate)

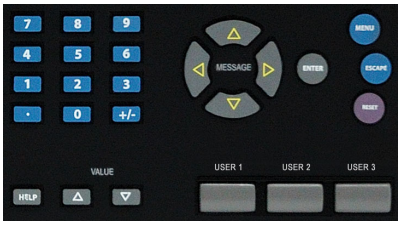

An additional four control pushbuttons are included on the basic faceplate when the F60 is ordered with the 12 user-programmable pushbutton option.

Figure 5-34: Control pushbuttons (basic faceplate)

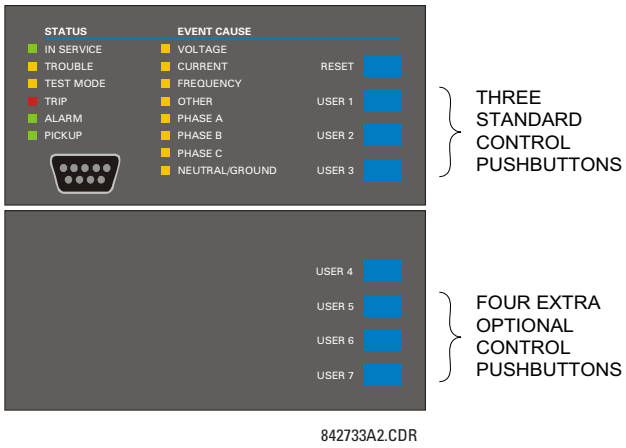

Control pushbuttons are not typically used for critical operations and are not protected by the control password. However, by supervising their output operands, the user can dynamically enable or disable control pushbuttons for security reasons.

Each control pushbutton asserts its own FlexLogic operand. Each operand need to be configured appropriately to perform the required function. Each operand remains asserted as long as the pushbutton is pressed and resets when the pushbutton is released. A dropout delay of 100 ms is incorporated to ensure fast pushbutton manipulation is recognized by various features that can use control pushbuttons as inputs.

An event is logged in the event record (as per user setting) when a control pushbutton is pressed. No event is logged when the pushbutton is released. The faceplate keys (including control keys) cannot be operated simultaneously—a given key must be released before the next one can be pressed.

The control pushbuttons become user-programmable only if the breaker control feature is not configured for manual control via the USER 1 through 3 pushbuttons as shown. If configured for manual control, breaker control typically uses the larger, optional user-programmable pushbuttons, making the control pushbuttons available for other user applications.

Figure 5-35: Control pushbutton logic

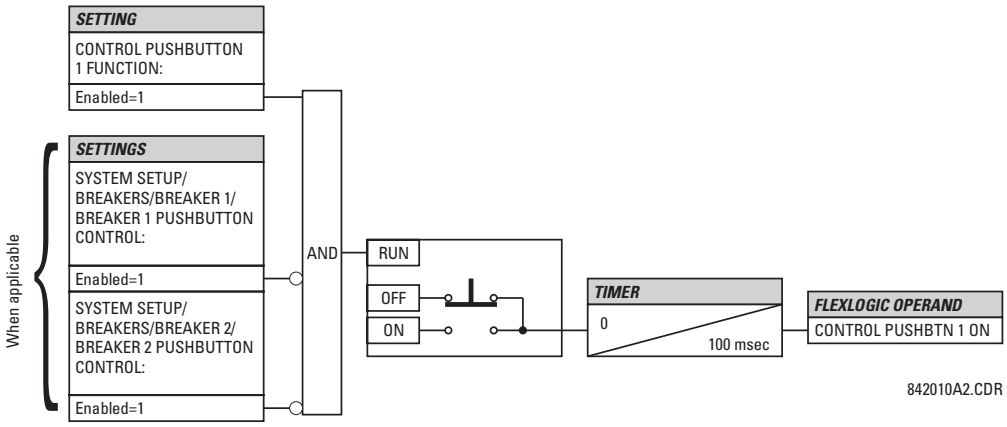

5.3.14 User-programmable pushbuttons

SETTINGS ⇨ PRODUCT SETUP ⇨⇩ USER-PROGRAMMABLE PUSHBUTTONS ⇨ USER PUSHBUTTON 1(16)

■ USER PUSHBUTTON 1 ■	⇔	**PUSHBUTTON 1 FUNCTION: Disabled**	Range: Self-Reset, Latched, Disabled
	⇕	**PUSHBTN 1 ID TEXT: USER PB 1**	Range: up to 20 alphanumeric characters
	⇕	**PUSHBTN 1 ON TEXT: PUSHBTN 1 ON**	Range: up to 20 alphanumeric characters
	⇕	**PUSHBTN 1 OFF TEXT: PUSHBTN 1 OFF**	Range: up to 20 alphanumeric characters
	⇕	**PUSHBTN 1 HOLD: 0.1 s**	Range: 0.0 to 10.0 s in steps of 0.1
	⇕	**PUSHBTN 1 SET: Off**	Range: FlexLogic operand
	⇕	**PUSHBTN 1 RESET: Off**	Range: FlexLogic operand
	⇕	**PUSHBTN 1 AUTORST: Disabled**	Range: Disabled, Enabled
	⇕	**PUSHBTN 1 AUTORST DELAY: 1.0 s**	Range: 0.2 to 600.0 s in steps of 0.1
	⇕	**PUSHBTN 1 REMOTE: Off**	Range: FlexLogic operand
	⇕	**PUSHBTN 1 LOCAL: Off**	Range: FlexLogic operand
	⇕	**PUSHBTN 1 DROP-OUT TIME: 0.00 s**	Range: 0 to 60.00 s in steps of 0.05

⇳	**PUSHBTN 1 LED CTL: Off**	Range: FlexLogic operand
⇳	**PUSHBTN 1 MESSAGE: Disabled**	Range: Disabled, Normal, High Priority
⇧	**PUSHBUTTON 1 EVENTS: Disabled**	Range: Disabled, Enabled

SOFTWARE OPTION

This option is available when an Inter-Relay Communications card is specified at the time of ordering (see the Order Code tables). With the option, direct inputs/outputs display by default. When you enable the teleprotection feature, direct I/O is not visible.

User-programmable pushbuttons provide an easy and error-free method of entering digital state (on, off) information. The number depends on the front panel ordered.

- Enhanced horizontal front panel — 16 user-programmable pushbuttons
- Enhanced vertical front panel — 6 user-programmable pushbuttons
- Basic horizontal front panel — 12 user-programmable pushbuttons

NOTE

User-programmable pushbuttons require a front panel with that option. If the front panel was ordered separately, update the EnerVista software under **Maintenance > Change Front Panel**.

The digital state can be entered locally (by directly pressing the front panel pushbutton) or remotely (via FlexLogic operands) into FlexLogic equations, protection elements, and control elements. Typical applications include breaker control, autorecloser blocking, and setting groups changes. The user-programmable pushbuttons are under the control level of password protection.

The figure shows user-configurable pushbuttons for the enhanced front panel.

Figure 5-36: User-programmable pushbuttons (enhanced front panel)

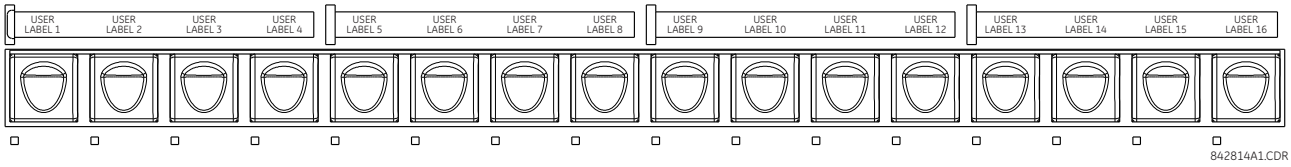

The following figure shows user-configurable pushbuttons for the basic front panel.

Figure 5-37: User-programmable pushbuttons (basic front panel)

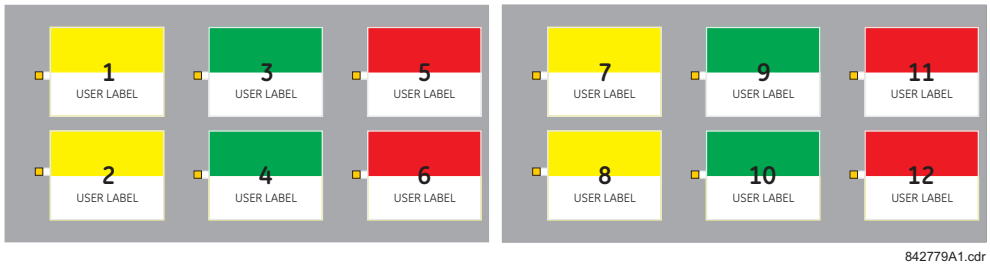

Both the basic and enhanced front panel pushbuttons can be custom labeled with a factory-provided template, available online at http://www.gegridsolutions.com/multilin. The EnerVista software can also be used to create labels for the enhanced front panel.

Each pushbutton asserts its own "On" and "Off" FlexLogic operands (for example, PUSHBUTTON 1 ON and PUSHBUTTON 1 OFF). These operands are available for each pushbutton and are used to program specific actions. If any pushbutton is active, the ANY PB ON operand is asserted.

Each pushbutton has an associated LED indicator. By default, this indicator displays the present status of the corresponding pushbutton (on or off). However, each LED indicator can be assigned to any FlexLogic operand through the **PUSHBTN 1 LED CTL** setting.

The activation and deactivation of user-programmable pushbuttons depends on whether latched or self-reset mode is programmed.

- **Latched mode** — In latched mode, a pushbutton can be set (activated) by asserting the operand assigned to the **PUSHBTN 1 SET** setting or by directly pressing the associated front panel pushbutton. The state of each pushbutton is stored in non-volatile memory and maintained through a loss of control power.

  The pushbutton is reset (deactivated) in latched mode by asserting the operand assigned to the **PUSHBTN 1 RESET** setting or by directly pressing the active front panel pushbutton.

  It can also be programmed to reset automatically through the **PUSHBTN 1 AUTORST** and **PUSHBTN 1 AUTORST DELAY** settings. These settings enable the autoreset timer and specify the associated time delay. The autoreset timer can be used in select-before-operate (SBO) breaker control applications, where the command type (close/open) or breaker location (feeder number) must be selected prior to command execution. The selection must reset automatically if control is not executed within a specified time period.
- **Self-reset mode** — In self-reset mode, a user-programmable pushbutton can be set (activated) by asserting the operand assigned to the **PUSHBTN 1 SET** setting or by pressing the front panel pushbutton. A pushbutton remains active for the time it is pressed plus the dropout time specified in the **PUSHBTN 1 DROP-OUT TIME** setting. If the pushbutton is activated via FlexLogic, the pulse duration is specified by the **PUSHBTN 1 DROP-OUT TIME** only. The time the operand assigned to the **PUSHBTN 1 SET** setting remains On has no effect on the pulse duration.

NOTE

The pulse duration of the remote set or local front panel pushbutton must be at least 50 ms to operate the pushbutton. This allows the user-programmable pushbuttons to properly operate during power cycling events and various system disturbances that can cause transient assertion of the operating signals.

The local and remote operation of each user-programmable pushbutton can be inhibited through the **PUSHBTN 1 LOCAL** and **PUSHBTN 1 REMOTE** settings. If local inhibit is applied, the pushbutton ignores set and reset commands executed through the front panel pushbuttons. If remote inhibit is applied, the pushbutton ignores set and reset commands executed through FlexLogic operands.

The inhibit functions are not applied to the autoreset feature. The inhibit function can be used in SBO control operations to prevent user-programmable pushbutton activation and ensuring "one-at-a-time" select operation.

The inhibit functions can also be used to prevent pushbutton activation from the accidental pressing of the front panel pushbuttons. The separate inhibit of the local and remote operation simplifies the implementation of local/remote control supervision.

Pushbutton states can be logged by the event recorder. User-defined messages can also be associated with each pushbutton and displayed when the pushbutton is activated and when in latched mode when the pushbutton deactivated.

PUSHBUTTON 1 FUNCTION — This setting selects the mode of the pushbutton (Self-Reset, Latched, Disabled). If set to "Disabled," the pushbutton is not active and the corresponding FlexLogic operands (both "On" and "Off") are de-asserted.

PUSHBTN 1 ID TEXT — This setting specifies the top 20-character line of the user-programmable pushbutton message and is intended to provide ID information of the pushbutton. See the User-definable Displays section in this chapter for instructions on how to enter alphanumeric characters from the keypad.

PUSHBTN 1 ON TEXT — This setting specifies the bottom 20-character line of the user-programmable pushbutton message and is displayed when the pushbutton is in the "on" position. See the User-definable Displays section for instructions on entering alphanumeric characters from the keypad.

PUSHBTN 1 OFF TEXT — This setting specifies the bottom 20-character line of the user-programmable pushbutton message and displays when the pushbutton is deactivated and the **PUSHBUTTON 1 FUNCTION** is "Latched." A message does not display when the **PUSHBUTTON 1 FUNCTION** is "Self-reset" as the pushbutton operand status is implied to be "Off" upon its release. The length of the "Off" message is configured with the **PRODUCT SETUP ⇨⇩ DISPLAY PROPERTIES ⇨ FLASH MESSAGE TIME** setting.

PUSHBTN 1 HOLD — This setting specifies the time required for a front panel pushbutton to be pressed before it is deemed active. This timer is reset upon release of the pushbutton. Note that user-programmable pushbutton operation requires the front panel pushbutton to be pressed a minimum of 50 ms. This minimum time is required prior to activating the user-programmable pushbutton hold timer.

PUSHBTN 1 SET — This setting assigns the FlexLogic operand serving to activate the user-programmable pushbutton element. The duration of the incoming set signal must be at least 50 ms.

PUSHBTN 1 RESET — This setting assigns the FlexLogic operand serving to deactivate the user-programmable pushbutton element. This setting is applicable only if the user-programmable pushbutton is in "Latched" mode.

PUSHBTN 1 AUTORST — This setting enables the user-programmable pushbutton autoreset feature. This setting is applicable only if the pushbutton is in "Latched" mode.

PUSHBTN 1 AUTORST DELAY — This setting specifies the time delay for automatic reset of the pushbutton when in "Latched" mode.

PUSHBTN 1 REMOTE — This setting assigns the FlexLogic operand serving to inhibit user-programmable pushbutton operation from the operand assigned to the **PUSHBTN 1 SET** or **PUSHBTN 1 RESET** settings.

PUSHBTN 1 LOCAL — This setting assigns the FlexLogic operand serving to inhibit user-programmable pushbutton operation from the front panel pushbuttons. This inhibit functionality is not applicable to pushbutton autoreset.

PUSHBTN 1 DROP-OUT TIME — This setting applies only to "Self-Reset" mode and specifies the duration of the user-programmable pushbutton active status after the front panel pushbutton has been released. When activated remotely, this setting specifies the entire activation time of the pushbutton; the length of time the operand selected by **PUSHBTN 1 SET** remains on has no effect on the pulse duration.

PUSHBTN 1 LED CTL — This setting assigns the FlexLogic operand serving to drive the front panel pushbutton LED. If this setting is "Off," then LED operation is directly linked to the PUSHBUTTON 1 ON operand.

PUSHBTN 1 MESSAGE — This setting controls the behavior of the user-programmable pushbutton on message that is programmed in the **PUSHBTN 1 ID** and **PUSHBTN 1 ON TEXT** settings, and the behavior of the user-programmable pushbutton off message that is programmed in the **PUSHBTN 1 ID** and **PUSHBTN 1 OFF TEXT** settings.

When set to "Disabled", user-programmable pushbutton messages do not display. Otherwise the on message displays when the user-programmable pushbutton becomes activated, and if in the "Latched" mode the off message displays when the user-programmable pushbutton becomes deactivated.

When set to "Normal", the duration the message displays is as specified by the **FLASH MESSAGE TIME** setting.

When set to "High Priority", the duration of the off message is as specified by the **FLASH MESSAGE TIME** setting, but the on message is displayed as long as the user-programmable pushbutton is activated. While activated, target and other messages are suppressed. To allow front panel keypad operation, when a keypad button is pressed the message is supressed for 10 seconds.

PUSHBUTTON 1 EVENTS — If this setting is enabled, each user-programmable pushbutton state change is logged as an event into the event recorder.

The figures show the user-programmable pushbutton logic.

Figure 5-38: User-programmable pushbutton logic (Sheet 1 of 2)

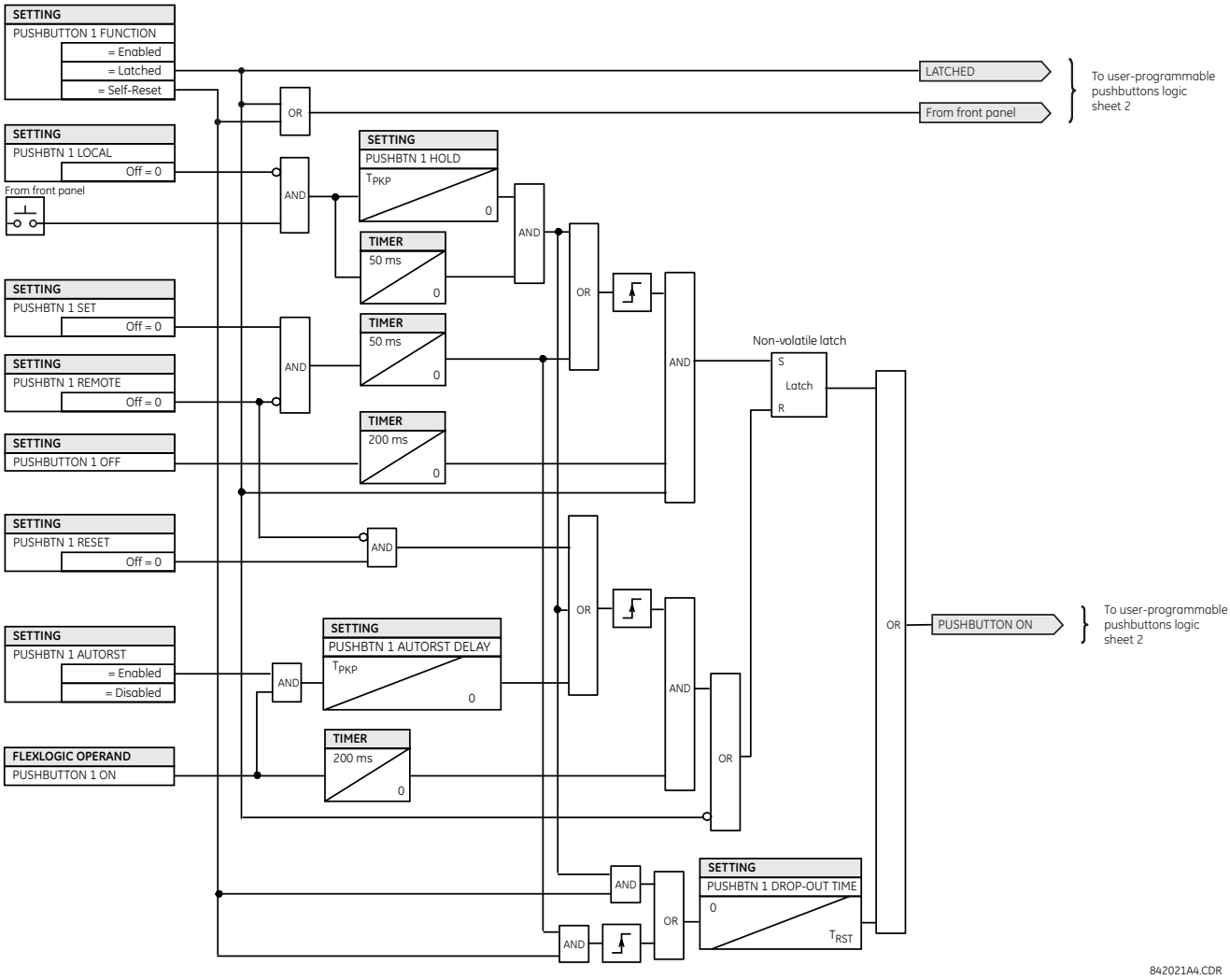

Figure 5-39: User-programmable pushbutton logic (Sheet 2 of 2)

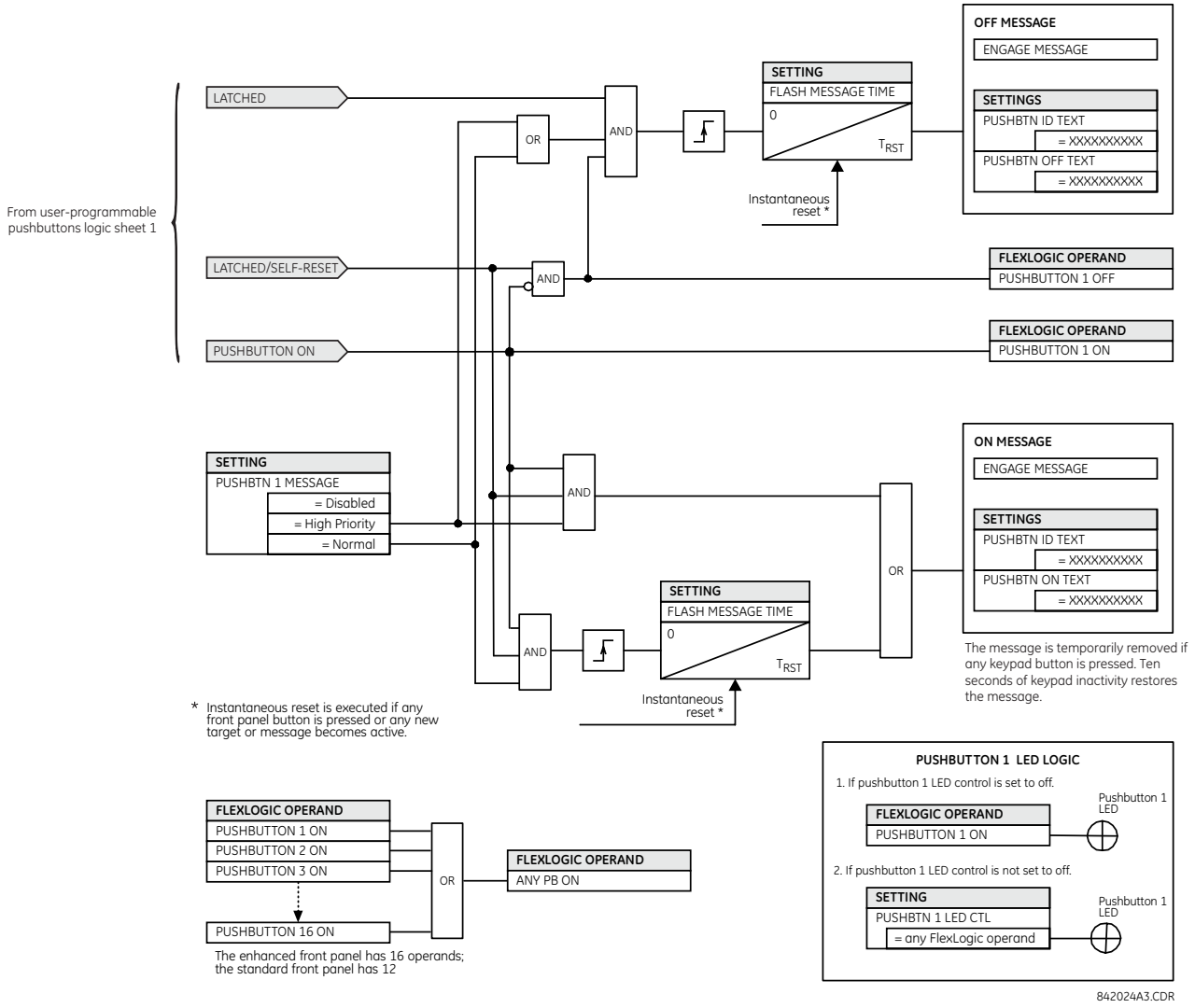

5.3.15 Flex state parameters

SETTINGS ⇨ PRODUCT SETUP ⇨⇩ FLEX STATE PARAMETERS

■ FLEX STATE ■ PARAMETERS	⇔	**PARAMETER 1:** **Off**	Range: FlexLogic operand
		⇩	
	⇧	**PARAMETER 256:** **Off**	Range: FlexLogic operand

This feature provides a mechanism where any of 256 selected FlexLogic operand states can be used for efficient monitoring. The feature allows user-customized access to the FlexLogic operand states in the relay. The state bits are packed so that 16 states are readable in a single Modbus register. The state bits can be configured so that all states of interest are available in a minimum number of Modbus registers.

The state bits can be read out in the "Flex States" register array beginning at Modbus address 0900h. Sixteen states are packed into each register, with the lowest-numbered state in the lowest-order bit. Sixteen registers accommodate the 256 state bits.

5.3.16 User-definable displays

5.3.16.1 Menu

SETTINGS ⇨ PRODUCT SETUP ⇨⇩ USER-DEFINABLE DISPLAYS

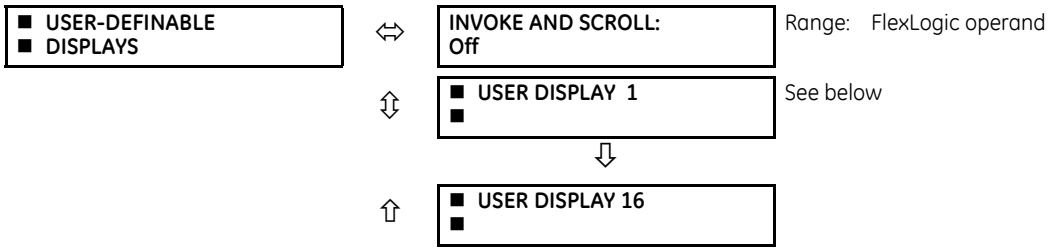

This menu provides a mechanism for manually creating up to 16 user-defined information displays in a convenient viewing sequence in the **USER DISPLAY** menu (between the **TARGETS** and **ACTUAL VALUES** top-level menus). The sub-menus facilitate text entry and Modbus register data pointer options for defining the user display content.

Once programmed, the user-definable displays can be viewed in two ways.

- **Keypad** — Use the **MENU** key to select the **USER DISPLAY** menu item to access the first user-definable display (note that only the programmed screens are displayed). The screens can be scrolled using the up and down arrow keys. The display disappears after the default message time-out period specified by the **PRODUCT SETUP ⇨⇩ DISPLAY PROPERTIES ⇨⇩ DEFAULT MESSAGE TIMEOUT** setting.
- **User-programmable control input** — The user-definable displays also respond to the **INVOKE AND SCROLL** setting. Any FlexLogic operand (in particular, the user-programmable pushbutton operands), can be used to navigate the programmed displays.

  On the rising edge of the configured operand (such as when the pushbutton is pressed), the displays are invoked by showing the last user-definable display shown during the previous activity. From this moment onward, the operand acts exactly as the down key and allows scrolling through the configured displays. The last display wraps up to the first one. The **INVOKE AND SCROLL** input and the down arrow key operate concurrently.

  When the default timer expires (set by the **DEFAULT MESSAGE TIMEOUT** setting), the relay starts to cycle through the user displays. The next activity of the **INVOKE AND SCROLL** input stops the cycling at the currently displayed user display, not at the first user-defined display. The **INVOKE AND SCROLL** pulses must last for at least 250 ms to take effect.

5.3.16.2 User display 1(16)

SETTINGS ⇨ PRODUCT SETUP ⇨⇩ USER-DEFINABLE DISPLAYS ⇨⇩ USER DISPLAY 1(16)

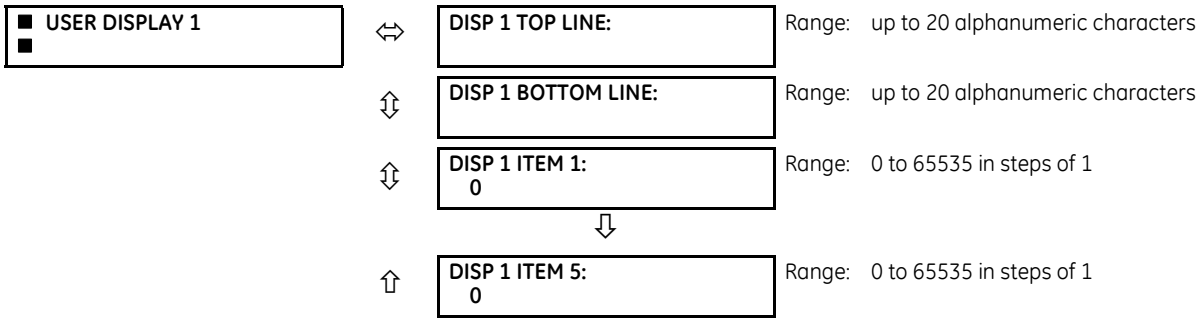

Any existing system display can be automatically copied into an available user display by selecting the existing display and pressing the **ENTER** key. The display then prompts with ADD TO USER DISPLAY LIST? After selecting "Yes," a message indicates that the selected display has been added to the user display list. When this type of entry occurs, the sub-menus are automatically configured with the proper content—this content can be edited subsequently.

This menu is used to enter user-defined text and user-selected Modbus-registered data fields into the particular user display. Each user display consists of two 20-character lines (top and bottom). The tilde (~) character is used to mark the start of a data field – the length of the data field needs to be accounted for. Up to five separate data fields can be entered in a user display – the *n*th tilde (~) refers to the *n*th item.

A user display can be entered from the faceplate keypad or the EnerVista interface (preferred for convenience). The following procedure shows how to enter text characters in the top and bottom lines from the faceplate keypad:

1. Select the line to be edited.
2. Press the decimal key to enter text edit mode.
3. Use either **VALUE** key to scroll through the characters. A space is selected like a character.
4. Press the decimal key to advance the cursor to the next position.
5. Repeat step 3 and continue entering characters until the desired text is displayed.
6. The **HELP** key can be pressed at any time for context sensitive help information.
7. Press the **ENTER** key to store the new settings.

To enter a numerical value for any of the five items (the *decimal form* of the selected Modbus address) from the faceplate keypad, use the number keypad. Use the value of "0" for any items not being used. Use the **HELP** key at any selected system display (setting, actual value, or command) which has a Modbus address, to view the *hexadecimal form* of the Modbus address, then manually convert it to decimal form before entering it (EnerVista usage conveniently facilitates this conversion).

Use the **MENU** key to go to the user displays menu to view the user-defined content. The current user displays show in sequence, changing every four seconds. While viewing a user display, press the **ENTER** key and then select the 'Yes" option to remove the display from the user display list. Use the **MENU** key again to exit the user displays menu.

An example of user display setup and result is shown as follows.

■ USER DISPLAY 1 ■	⇔	DISP 1 TOP LINE: Current X ~ A	Shows user-defined text with first tilde marker
	⇳	DISP 1 BOTTOM LINE: Current Y ~ A	Shows user-defined text with second tilde marker
	⇳	DISP 1 ITEM 1: 6016	Shows decimal form of user-selected Modbus register address, corresponding to first tilde marker
	⇳	DISP 1 ITEM 2: 6357	Shows decimal form of user-selected Modbus register address, corresponding to second tilde marker
	⇳	DISP 1 ITEM 3: 0	This item is not being used. There is no corresponding tilde marker in top or bottom lines.
	⇳	DISP 1 ITEM 4: 0	This item is not being used. There is no corresponding tilde marker in top or bottom lines.
	⇧	DISP 1 ITEM 5: 0	This item is not being used. There is no corresponding tilde marker in top or bottom lines.
USER DISPLAYS	⇨	Current X 0.850 Current Y 0.327 A	Shows the resultant display content

If the parameters for the top line and the bottom line items have the same units, then the unit is displayed on the bottom line only. The units are only displayed on both lines if the units specified both the top and bottom line items are different.

5.3.17 Direct inputs and outputs

5.3.17.1 Menu

SETTINGS ⇨ PRODUCT SETUP ⇨⇩ DIRECT I/O

■ DIRECT I/O ■	⇔	DIRECT OUTPUT DEVICE ID: 1 — Range: 1 to 16 in steps of 1
	⇩	DIRECT I/O CH1 RING CONFIGURATION: Yes — Range: Yes, No
	⇩	DIRECT I/O CH2 RING CONFIGURATION: Yes — Range: Yes, No
	⇩	DIRECT I/O DATA RATE: 64 kbps — Range: 64 kbps, 128 kbps
	⇩	DIRECT I/O CHANNEL CROSSOVER: Disabled — Range: Disabled, Enabled
	⇩	■ CRC ALARM CH1 ■ — See page 5-114
	⇩	■ CRC ALARM CH2 ■
	⇩	■ UNRETURNED ■ MESSAGES ALARM CH1 — See page 5-114
	⇩	■ UNRETURNED ■ MESSAGES ALARM CH2

This option is available when an Inter-Relay Communications card is specified at the time of ordering (see the Order Code tables). With the option, direct inputs/outputs display by default. When you enable the teleprotection feature, direct I/O is not visible.

Direct inputs and outputs exchange status information (inputs and outputs) between UR-series relays connected directly via type 7 digital communications cards. The mechanism is very similar to IEC 61850 GOOSE, except that communications takes place over a non-switchable isolated network and is optimized for speed. On type 7 cards that support two channels, direct output messages are sent from both channels simultaneously. This effectively sends direct output messages both ways around a ring configuration. On type 7 cards that support one channel, direct output messages are sent only in one direction. Messages are resent (forwarded) when it is determined that the message did not originate at the receiver.

For the direct I/Os to function properly, all UR devices sending I/Os using an Inter-Relay Communications card must have identical firmware revisions.

Teleprotection inputs/outputs and direct inputs/outputs are mutually exclusive. As such, they cannot be used simultaneously. Once teleprotection inputs and outputs are enabled, direct inputs and outputs are blocked, and vice versa.

Direct output message timing is similar to GOOSE message timing. Integrity messages (with no state changes) are sent at least every 1000 ms. Messages with state changes are sent within the main pass scanning the inputs and asserting the outputs unless the communication channel bandwidth has been exceeded. Two self-tests are performed and signaled by the following FlexLogic operands:

- DIRECT RING BREAK (direct input/output ring break). This FlexLogic operand indicates that direct output messages sent from a UR-series relay are not being received back by the relay.
- DIRECT DEVICE 1 OFF to DIRECT DEVICE 16 OFF (direct device offline). These FlexLogic operands indicate that direct output messages from at least one direct device are not being received.

Direct input and output settings are similar to remote input and output settings. The equivalent of the remote device name strings for direct inputs and outputs is the **DIRECT OUTPUT DEVICE ID** setting, which identifies the relay in all direct output messages. All UR-series IEDs in a ring need to have unique numbers assigned. The IED ID is used to identify the sender of the direct input and output message.

If the direct input and output scheme is configured to operate in a ring (**DIRECT I/O CH1 RING CONFIGURATION** or **DIRECT I/O CH2 RING CONFIGURATION** is "Yes"), all direct output messages are received back. If not, the direct input/output ring break self-test is triggered. The self-test error is signaled by the DIRECT RING BREAK FlexLogic operand.

Select the **DIRECT I/O DATA RATE** to match the data capabilities of the communications channel. All IEDs communicating over direct inputs and outputs must be set to the same data rate. UR-series IEDs equipped with dual-channel communications cards apply the same data rate to both channels. Delivery time for direct input and output messages is approximately 0.2 of a power system cycle at 128 kbps and 0.4 of a power system cycle at 64 kbps, per each "bridge."

Table 5-15: Direct input and output data rates

Module	Channel	Supported data rates
74	Channel 1	64 kbps
	Channel 2	64 kbps
7L	Channel 1	64 kbps, 128 kbps
	Channel 2	64 kbps, 128 kbps
7M	Channel 1	64 kbps, 128 kbps
	Channel 2	64 kbps, 128 kbps
7P	Channel 1	64 kbps, 128 kbps
	Channel 2	64 kbps, 128 kbps
7T	Channel 1	64 kbps, 128 kbps
7W	Channel 1	64 kbps, 128 kbps
	Channel 2	64 kbps, 128 kbps
7V	Channel 1	64 kbps, 128 kbps
	Channel 2	64 kbps, 128 kbps
2A	Channel 1	64 kbps
2B	Channel 1	64 kbps
	Channel 2	64 kbps
2G	Channel 1	128 kbps
2H	Channel 1	128 kbps
2I	Channel 1	64 kbps, 128 kbps
	Channel 2	64 kbps, 128 kbps
2J	Channel 1	64 kbps, 128 kbps
	Channel 2	64 kbps, 128 kbps

Module	Channel	Supported data rates
76	Channel 1	64 kbps
77	Channel 1	64 kbps
	Channel 2	64 kbps
75	Channel 1	64 kbps
	Channel 2	64 kbps
7E	Channel 1	64 kbps
	Channel 2	64 kbps
7F	Channel 1	64 kbps
	Channel 2	64 kbps
7G	Channel 1	64 kbps
	Channel 2	64 kbps
7Q	Channel 1	64 kbps
	Channel 2	64 kbps
7R	Channel 1	64 kbps
7S	Channel 1	64 kbps
	Channel 2	64 kbps

NOTE

The G.703 modules are fixed at 64 kbps. The **DIRECT I/O DATA RATE** setting is not applicable to these modules.

The **DIRECT I/O CHANNEL CROSSOVER** setting applies to F60s with dual-channel communication cards and allows crossing over messages from channel 1 to channel 2. This places all UR-series IEDs into one direct input and output network regardless of the physical media of the two communication channels.

The following application examples illustrate the basic concepts for direct input and output configuration. See the Inputs and Outputs section in this chapter for information on configuring FlexLogic operands (flags, bits) to be exchanged.

Example 1: Extending the input/output capabilities of a UR-series relay

Consider an application that requires additional quantities of contact inputs or output contacts or lines of programmable logic that exceed the capabilities of a single UR-series chassis. The problem is solved by adding an extra UR-series IED, such as the C30, to satisfy the additional input and output and programmable logic requirements. The two IEDs are connected via single-channel digital communication cards as shown in the figure.

Figure 5-40: Input and output extension via direct inputs and outputs

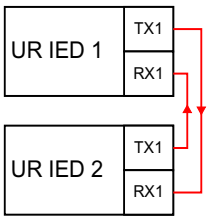

In this application, apply the following settings. For UR-series IED 1:

DIRECT OUTPUT DEVICE ID: "1"
DIRECT I/O CH1 RING CONFIGURATION: "Yes"
DIRECT I/O DATA RATE: "128 kbps"

For UR-series IED 2:

DIRECT OUTPUT DEVICE ID: "2"
DIRECT I/O CH1 RING CONFIGURATION: "Yes"
DIRECT I/O DATA RATE: "128 kbps"

The message delivery time is about 0.2 of power cycle in both ways (at 128 kbps); that is, from device 1 to device 2, and from device 2 to device 1. Different communications cards can be selected by the user for this back-to-back connection (for example: fiber, G.703, or RS422).

Example 2: Interlocking busbar protection

A simple interlocking busbar protection scheme could be accomplished by sending a blocking signal from downstream devices, say 2, 3, and 4, to the upstream device that monitors a single incomer of the busbar, as shown.

Figure 5-41: Sample interlocking busbar protection scheme

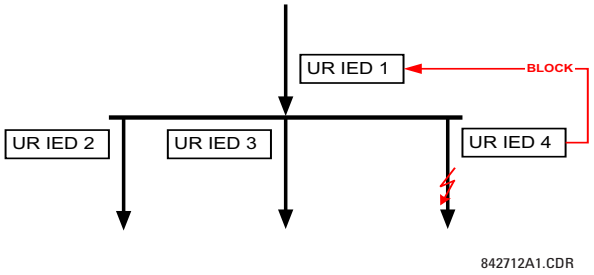

For increased reliability, a dual-ring configuration (shown as follows) is recommended for this application.

Figure 5-42: Interlocking bus protection scheme via direct inputs/outputs

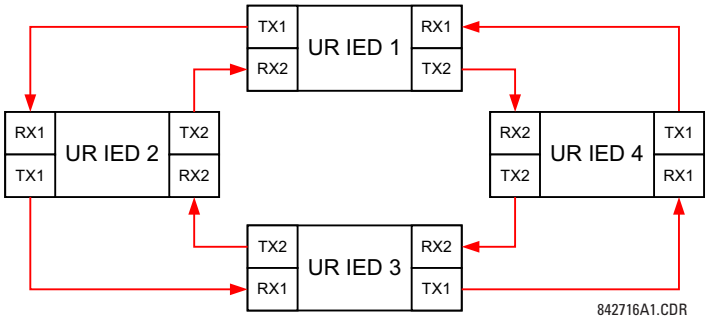

In this application, apply the following settings. For UR-series IED 1:

DIRECT OUTPUT DEVICE ID: "1"
DIRECT I/O CH1 RING CONFIGURATION: "Yes"
DIRECT I/O CH2 RING CONFIGURATION: "Yes"

For UR-series IED 2:

DIRECT OUTPUT DEVICE ID: "2"
DIRECT I/O CH1 RING CONFIGURATION: "Yes"
DIRECT I/O CH2 RING CONFIGURATION: "Yes"

For UR-series IED 3:

DIRECT OUTPUT DEVICE ID: "3"
DIRECT I/O CH1 RING CONFIGURATION: "Yes"
DIRECT I/O CH2 RING CONFIGURATION: "Yes"

For UR-series IED 4:

DIRECT OUTPUT DEVICE ID: "4"
DIRECT I/O CH1 RING CONFIGURATION: "Yes"
DIRECT I/O CH2 RING CONFIGURATION: "Yes"

Message delivery time is approximately 0.2 of power system cycle (at 128 kbps) times number of 'bridges' between the origin and destination. Dual-ring configuration effectively reduces the maximum 'communications distance' by a factor of two.

In this configuration the following delivery times are expected (at 128 kbps) if both rings are healthy:

IED 1 to IED 2: 0.2 of power system cycle
IED 1 to IED 3: 0.4 of power system cycle
IED 1 to IED 4: 0.2 of power system cycle
IED 2 to IED 3: 0.2 of power system cycle
IED 2 to IED 4: 0.4 of power system cycle
IED 3 to IED 4: 0.2 of power system cycle

If one ring is broken (say TX2-RX2) the delivery times are as follows:

IED 1 to IED 2: 0.2 of power system cycle
IED 1 to IED 3: 0.4 of power system cycle
IED 1 to IED 4: 0.6 of power system cycle
IED 2 to IED 3: 0.2 of power system cycle
IED 2 to IED 4: 0.4 of power system cycle
IED 3 to IED 4: 0.2 of power system cycle

A coordinating timer for this bus protection scheme could be selected to cover the worst case scenario (0.4 of a power system cycle). Upon detecting a broken ring, the coordination time is adaptively increased to 0.6 of a power system cycle. The complete application requires addressing a number of issues, such as failure of both the communications rings, failure or out-of-service conditions of one of the relays, and so on. Self-monitoring flags of the direct inputs and outputs feature primarily are used to address these concerns.

5

Example 3: Pilot-aided schemes

Consider the three-terminal line protection application shown.

Figure 5-43: Three-terminal line application

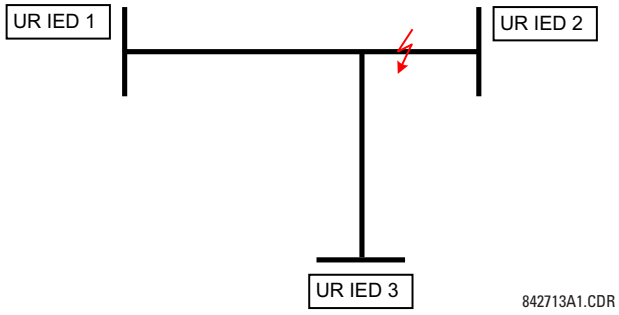

A permissive pilot-aided scheme can be implemented in a two-ring configuration, shown as follows (IEDs 1 and 2 constitute a first ring, while IEDs 2 and 3 constitute a second ring).

Figure 5-44: Single-channel open loop configuration

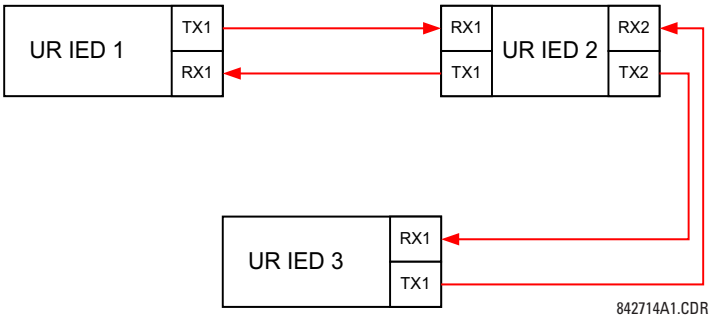

In this application, apply the following settings. For UR-series IED 1:

DIRECT OUTPUT DEVICE ID: "1"
DIRECT I/O CH1 RING CONFIGURATION: "Yes"
DIRECT I/O CH2 RING CONFIGURATION: "Yes"

For UR-series IED 2:

DIRECT OUTPUT DEVICE ID: "2"
DIRECT I/O CH1 RING CONFIGURATION: "Yes"
DIRECT I/O CH2 RING CONFIGURATION: "Yes"

For UR-series IED 3:

DIRECT OUTPUT DEVICE ID: "3"
DIRECT I/O CH1 RING CONFIGURATION: "Yes"
DIRECT I/O CH2 RING CONFIGURATION: "Yes"

In this configuration the following delivery times are expected (at 128 kbps):

IED 1 to IED 2: 0.2 of power system cycle
IED 1 to IED 3: 0.5 of power system cycle
IED 2 to IED 3: 0.2 of power system cycle

In this scheme, IEDs 1 and 3 do not communicate directly. IED 2 must be configured to forward the messages as explained in the Inputs and Outputs section. Implement a blocking pilot-aided scheme with more security and, ideally, faster message delivery time. This is accomplished using a dual-ring configuration as shown here.

Figure 5-45: Dual-channel closed loop (dual-ring) configuration

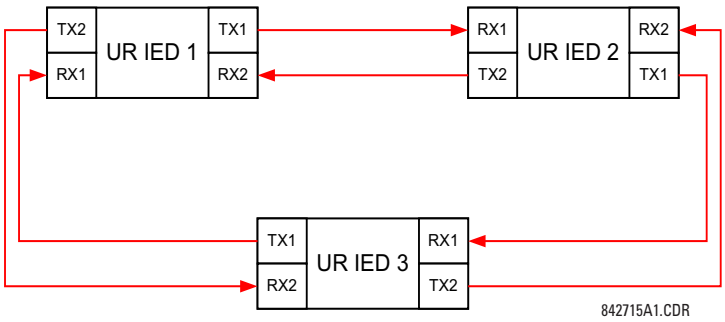

In this application, apply the following settings. For UR-series IED 1:

DIRECT OUTPUT DEVICE ID: "1"
DIRECT I/O CH1 RING CONFIGURATION: "Yes"
DIRECT I/O CH2 RING CONFIGURATION: "Yes"

For UR-series IED 2:

DIRECT OUTPUT DEVICE ID: "2"
DIRECT I/O CH1 RING CONFIGURATION: "Yes"
DIRECT I/O CH2 RING CONFIGURATION: "Yes"

For UR-series IED 3:

DIRECT OUTPUT DEVICE ID: "3"
DIRECT I/O CH1 RING CONFIGURATION: "Yes"
DIRECT I/O CH2 RING CONFIGURATION: "Yes"

In this configuration the following delivery times are expected (at 128 kbps) if both the rings are healthy:

IED 1 to IED 2: 0.2 of power system cycle
IED 1 to IED 3: 0.2 of power system cycle
IED 2 to IED 3: 0.2 of power system cycle

The two communications configurations can be applied to both permissive and blocking schemes. Take speed, reliability, and cost into account when selecting the required architecture.

5.3.17.2 CRC alarm CH1(2)

SETTINGS ⇨ PRODUCT SETUP ⇨⇩ DIRECT I/O ⇨⇩ CRC ALARM CH1(2)

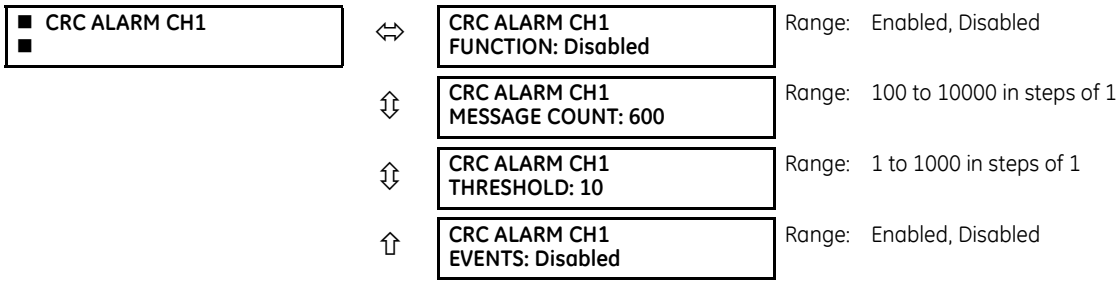

The F60 checks integrity of the incoming direct input and output messages using a 32-bit CRC. The CRC alarm function is available for monitoring the communication medium noise by tracking the rate of messages failing the CRC check. The monitoring function counts all incoming messages, including messages that failed the CRC check. A separate counter adds up messages that failed the CRC check. When the failed CRC counter reaches the user-defined level specified by the **CRC ALARM CH1 THRESHOLD** setting within the user-defined message count **CRC ALARM 1 CH1 COUNT**, the DIR IO CH1 CRC ALARM FlexLogic operand is set.

When the total message counter reaches the user-defined maximum specified by the **CRC ALARM CH1 MESSAGE COUNT** setting, both the counters reset and the monitoring process is restarted.

Configure the operand to drive an output contact, user-programmable LED, or selected communication-based output. Latching and acknowledging conditions—if required—are programmed accordingly.

The CRC alarm function is available on a per-channel basis. The total number of direct input and output messages that failed the CRC check is available as the **ACTUAL VALUES ⇨ STATUS ⇨⇩ DIRECT INPUTS ⇨⇩ CRC FAIL COUNT CH1** actual value.

- **Message count and length of the monitoring window** — To monitor communications integrity, the relay sends 1 message per second (at 64 kbps) or 2 messages per second (128 kbps) even if there is no change in the direct outputs. For example, setting the **CRC ALARM CH1 MESSAGE COUNT** to "10000," corresponds a time window of about 160 minutes at 64 kbps and 80 minutes at 128 kbps. If the messages are sent faster as a result of direct outputs activity, the monitoring time interval shortens. Take this into account when determining the **CRC ALARM CH1 MESSAGE COUNT** setting. For example, if the requirement is a maximum monitoring time interval of 10 minutes at 64 kbps, then the **CRC ALARM CH1 MESSAGE COUNT** is set to $10 \times 60 \times 1 = 600$.
- **Correlation of failed CRC and bit error rate (BER)** — The CRC check can fail if one or more bits in a packet are corrupted. Therefore, an exact correlation between the CRC fail rate and the BER is not possible. Under certain assumptions an approximation can be made as follows. A direct input and output packet containing 20 bytes results in 160 bits of data being sent and therefore, a transmission of 63 packets is equivalent to 10,000 bits. A BER of 10^{-4} implies 1 bit error for every 10000 bits sent or received. Assuming the best case of only 1 bit error in a failed packet, having 1 failed packet for every 63 received is about equal to a BER of 10^{-4}.

5.3.17.3 Unreturned messages alarm CH1(2)

SETTINGS ⇨ PRODUCT SETUP ⇨⇩ DIRECT I/O ⇨⇩ UNRETURNED MESSAGES ALARM CH1(2)

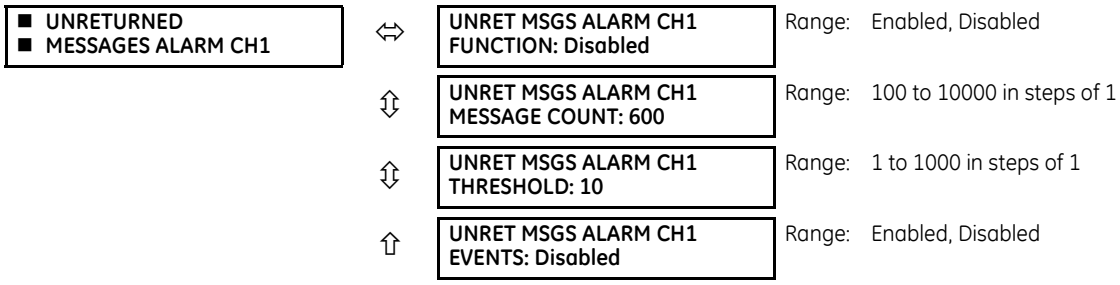

The F60 checks integrity of the direct input and output communication ring by counting unreturned messages. In the ring configuration, all messages originating at a given device should return within a pre-defined period of time. The unreturned messages alarm function is available for monitoring the integrity of the communication ring by tracking the rate of

unreturned messages. This function counts all the outgoing messages and a separate counter adds the messages have failed to return. When the unreturned messages counter reaches the user-definable level specified by the **UNRET MSGS ALARM CH1 THRESHOLD** setting and within the user-defined message count **UNRET MSGS ALARM CH1 COUNT**, the DIR IO CH1 UNRET ALM FlexLogic operand is set.

When the total message counter reaches the user-defined maximum specified by the **UNRET MSGS ALARM CH1 MESSAGE COUNT** setting, both the counters reset and the monitoring process is restarted.

Configure the operand to drive an output contact, user-programmable LED, or selected communication-based output. Latching and acknowledging conditions, if required, are programmed accordingly.

The unreturned messages alarm function is available on a per-channel basis and is active only in the ring configuration. The total number of unreturned input and output messages is available as the **ACTUAL VALUES ⇨ STATUS ⇨⇩ DIRECT INPUTS ⇨⇩ UNRETURNED MSG COUNT CH1** actual value.

5.3.18 Teleprotection

SETTINGS ⇨ PRODUCT SETUP ⇨⇩ TELEPROTECTION

■ TELEPROTECTION ■	⇔	TELEPROTECTION FUNCTION: Disabled	Range: Disabled, Enabled
	⇩	NUMBER OF TERMINALS: 2	Range: 2, 3
	⇩	NUMBER OF COMM CHANNELS: 1	Range: 1, 2
	⇩	LOCAL RELAY ID NUMBER: 0	Range: 0 to 255 in steps of 1
	⇩	TERMINAL 1 RELAY ID NUMBER: 0	Range: 0 to 255 in steps of 1
	⇩	TERMINAL 2 RELAY ID NUMBER: 0	Range: 0 to 255 in steps of 1

This option is available when an Inter-Relay Communications card is specified at the time of ordering (see the Order Code tables). With the option, direct inputs/outputs display by default. When you enable the teleprotection feature, direct I/O is not visible.

Digital teleprotection transfers protection commands between two or three relays in a secure, fast, dependable, and deterministic way. Possible applications are permissive or blocking pilot schemes and direct transfer trip (DTT). Teleprotection can be applied over any analog or digital channels and any communications media, such as direct fiber, copper wires, optical networks, or microwave radio links. A mixture of communication media is possible.

Once teleprotection is enabled and the teleprotection input/outputs are configured, data packets are transmitted continuously every 1/4 cycle (3/8 cycle if using C37.94 modules) from peer-to-peer. Security of communication channel data is achieved by using CRC-32 on the data packet.

Teleprotection inputs/outputs and direct inputs/outputs are mutually exclusive. As such, they cannot be used simultaneously. Once teleprotection inputs and outputs are enabled, direct inputs and outputs are blocked, and vice versa.

NUMBER OF TERMINALS — Specifies whether the teleprotection system operates between two peers or three peers.

NUMBER OF CHANNELS — Specifies how many channels are used. If the **NUMBER OF TERMINALS** is "3" (three-terminal system), set the **NUMBER OF CHANNELS** to "2." For a two-terminal system, the **NUMBER OF CHANNELS** can set to "1" or "2" (redundant channels).

LOCAL RELAY ID NUMBER, **TERMINAL 1 RELAY ID NUMBER**, and **TERMINAL 2 RELAY ID NUMBER** — In installations that use multiplexers or modems, it is desirable to ensure that the data used by the relays protecting a given line is from the correct relays. The teleprotection function performs this check by reading the message ID sent by transmitting relays and comparing it to the programmed ID in the receiving relay. This check is also used to block inputs if inadvertently set to loopback mode or data is being received from a wrong relay by checking the ID on a received channel. If an incorrect ID is found on a channel during normal operation, the TELEPROT CH1 ID FAIL or TELEPROT CH2 ID FAIL FlexLogic operand is set, driving the event with the same name and blocking the teleprotection inputs. For commissioning purposes, the result of channel identification is also shown in the **STATUS ⇨⇩ CHANNEL TESTS ⇨⇩ VALIDITY OF CHANNEL CONFIGURATION** actual value. The default value of "0" for the **LOCAL RELAY ID NUMBER** indicates that relay ID is not to be checked. On two- terminals two-channel systems, the same **LOCAL RELAY ID NUMBER** is transmitted over both channels; as such, only the **TERMINAL 1 ID NUMBER** has to be programmed on the receiving end.

5.3.19 Installation

SETTINGS ⇨ PRODUCT SETUP ⇨⇩ INSTALLATION

■ **INSTALLATION** ■	⇔	**RELAY SETTINGS: Not Programmed**	Range: Not Programmed, Programmed
	⇧	**RELAY NAME: Relay-1**	Range: up to 20 alphanumeric characters

To safeguard against the installation of a relay without any entered settings, the unit does not allow signaling of any output relay until **RELAY SETTINGS** is set to "Programmed." This setting is "Not Programmed" by default. The UNIT NOT PROGRAMMED self-test error message displays until the relay is put into the "Programmed" state.

The **RELAY NAME** setting allows the user to uniquely identify a relay. This name appears on generated reports.

5

5.4 Remote resources

5.4.1 Remote resources configuration

When the F60 is ordered with a process card module as a part of HardFiber system, an additional **Remote Resources** menu tree is available in the EnerVista software to allow configuration of the HardFiber system.

Figure 5-46: Remote Resources configuration menu

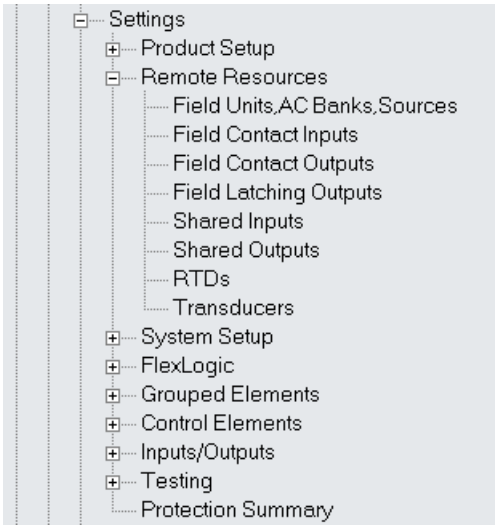

The remote resources settings configure a F60 with a process bus module to work with HardFiber Bricks. Remote resources configuration is only available through the EnerVista software, and is not available through the F60 front panel. A Brick provides eight AC measurements, along with contact inputs, DC analog inputs, and contact outputs, to be the remote interface to field equipment such as circuit breakers and transformers. The F60 with a process bus module has access to all of the capabilities of up to eight Bricks. Remote resources settings configure the point-to-point connection between specific fiber optic ports on the F60 process card and specific Brick. The relay is then configured to measure specific currents, voltages and contact inputs from those Bricks, and to control specific outputs.

The configuration process for remote resources is straightforward and consists of the following steps.

- Configure the field units. This establishes the point-to-point connection between a specific port on the relay process bus module, and a specific digital core on a specific Brick. This is a necessary first step in configuring a process bus relay.
- Configure the AC banks. This sets the primary and secondary quantities and connections for currents and voltages. AC bank configuration also provides a provision for redundant measurements for currents and voltages, a powerful reliability improvement possible with process bus.
- Configure signal sources. This functionality of the F60 has not changed other than the requirement to use currents and voltages established by AC bank configuration under the remote resources menu.
- Configure field contact inputs, field contact outputs, RTDs, and transducers as required for the application's functionality. These inputs and outputs are the physical interface to circuit breakers, transformers, and other equipment. They replace the traditional contact inputs and outputs located at the relay to virtually eliminate copper wiring.
- Configure shared inputs and outputs as required for the application's functionality. Shared inputs and outputs are distinct binary channels that provide high-speed protection quality signaling between relays through a Brick.

For additional information on how to configure a relay with a process bus module, see the HardFiber Process Bus System Instruction Manual.

5.5 System setup

5.5.1 AC inputs

5.5.1.1 Current banks

SETTINGS ⇨⇩ SYSTEM SETUP ⇨ AC INPUTS ⇨ CURRENT BANK F1(M5)

■ CURRENT BANK F1 ■	⇔	PHASE CT F1 PRIMARY: 1 A	Range: 1 to 65000 A in steps of 1
	⇩	PHASE CT F1 SECONDARY: 1 A	Range: 1 A, 5 A
	⇩	GROUND CT F1 PRIMARY: 1 A	Range: 1 to 65000 A in steps of 1
	⇧	GROUND CT F1 SECONDARY: 1 A	Range: 1 A, 5 A

Because energy parameters are accumulated, record these values and then reset immediately prior to changing CT characteristics.

Two banks of phase and ground CTs can be set, where the current banks are denoted in the following format (X represents the module slot position letter):

Xa, where X = {F, M} and a = {1, 5}

See the Introduction to AC Sources section at the beginning of this chapter for details.

These settings are critical for all features that have settings dependent on current measurements. When the relay is ordered, the CT module must be specified to include a standard or sensitive ground input. As the phase CTs are connected in wye (star), the calculated phasor sum of the three phase currents (IA + IB + IC = neutral current = 3I0) is used as the input for the neutral overcurrent elements. In addition, a zero-sequence (core balance) CT which senses current in all of the circuit primary conductors, or a CT in a neutral grounding conductor can also be used. For this configuration, the ground CT primary rating must be entered. To detect low level ground fault currents, the sensitive ground input can be used. In this case, the sensitive ground CT primary rating must be entered. See chapter 3 for more details on CT connections.

Enter the rated CT primary current values. For both 1000:5 and 1000:1 CTs, the entry would be 1000. For correct operation, the CT secondary rating must match the setting (which must also correspond to the specific CT connections used).

The following example illustrates how multiple CT inputs (current banks) are summed as one source current. Given the following current banks:

- F1: CT bank with 500:1 ratio
- F5: CT bank with 1000:1 ratio
- M1: CT bank with 800:1 ratio

The following rule applies:

Eq. 5-7

where F60 allows CT bank summation in SRC 3 or 4.

$$SRC\ 1 = F1 + F5 + M1 \quad \textbf{Eq. 5-8}$$

1 pu is the highest primary current. In this case, 1000 is entered and the secondary current from the 500:1 and 800:1 ratio CTs are adjusted to that created by a 1000:1 CT before summation. If a protection element is set up to act on SRC 1 currents, then a pickup level of 1 pu operates on 1000 A primary.

The same rule applies for current sums from CTs with different secondary taps (5 A and 1 A).

5

5.5.1.2 Voltage banks

SETTINGS ⇨⇩ SYSTEM SETUP ⇨ AC INPUTS ⇨⇩ VOLTAGE BANK F5(M5)

■ VOLTAGE BANK F5 ■	⇔	PHASE VT F5 CONNECTION: Wye	Range: Wye, Delta
	⇩	PHASE VT F5 SECONDARY: 66.4 V	Range: 25.0 to 240.0 V in steps of 0.1
	⇩	PHASE VT F5 RATIO: 1.00 :1	Range: 1.00 to 24000.00 in steps of 0.01
	⇩	AUXILIARY VT F5 CONNECTION: Vag	Range: Vn, Vag, Vbg, Vcg, Vab, Vbc, Vca
	⇩	AUXILIARY VT F5 SECONDARY: 66.4 V	Range: 25.0 to 240.0 V in steps of 0.1
	⇩	AUXILIARY VT F5 RATIO: 1.00 :1	Range: 1.00 to 24000.00 in steps of 0.01

Because energy parameters are accumulated, these values should be recorded and then reset immediately prior to changing VT characteristics.

One bank of phase/auxiliary VTs can be set, where voltage banks are denoted in the following format (X represents the module slot position letter):

Xa, where X = {F, M} and a = {5}

See the Introduction to AC Sources section at the beginning of this chapter for details.

With VTs installed, the relay can perform voltage measurements as well as power calculations. Enter the **PHASE VT F5 CONNECTION** made to the system as "Wye" or "Delta." An open-delta source VT connection is entered as "Delta."

NOTE

The nominal **PHASE VT F5 SECONDARY** voltage setting is the voltage across the relay input terminals when nominal voltage is applied to the VT primary.

For example, on a system with a 13.8 kV nominal primary voltage and with a 14400:120 volt VT in a delta connection, the secondary voltage is 115; that is, (13800 / 14400) × 120. For a wye connection, the voltage value entered must be the phase to neutral voltage, which is 115 / $\sqrt{3}$ = 66.4.

On a 14.4 kV system with a delta connection and a VT primary to secondary turns ratio of 14400:120, the voltage value entered is 120; that is, 14400 / 120.

NOTE

If the **PHASE VT F5 CONNECTION** is set to "Delta", the relay does not calculate voltage harmonics.

5.5.2 Power system

SETTINGS ⇨⇩ SYSTEM SETUP ⇨⇩ POWER SYSTEM

■ POWER SYSTEM ■	⇔	**NOMINAL FREQUENCY:** **60 Hz**	Range: 25 to 60 Hz in steps of 1
	⇕	**PHASE ROTATION:** **ABC**	Range: ABC, ACB
	⇕	**FREQUENCY AND PHASE REFERENCE: SRC 1**	Range: SRC 1, SRC 2, SRC 3, SRC 4
	⇧	**FREQUENCY TRACKING:** **Enabled**	Range: Disabled, Enabled

The power system **NOMINAL FREQUENCY** value is used as a default to set the digital sampling rate if the system frequency cannot be measured from available signals. This can happen if the signals are not present or are heavily distorted. Before reverting to the nominal frequency, the frequency tracking algorithm holds the last valid frequency measurement for a safe period of time while waiting for the signals to reappear or for the distortions to decay. After changing this setting, restart the relay using **Maintenance > Reboot Relay Command**.

The phase sequence of the power system is required to properly calculate sequence components and power parameters. The **PHASE ROTATION** setting matches the power system phase sequence and informs the relay of the actual system phase sequence, either ABC or ACB. CT and VT inputs on the relay, labeled as A, B, and C, must be connected to system phases A, B, and C for correct operation.

The **FREQUENCY AND PHASE REFERENCE** setting determines which signal source is used (and hence which AC signal) for phase angle reference. The AC signal used is prioritized based on the AC inputs configured for the signal source. Phase voltages takes precedence, followed by auxiliary voltage, then phase currents, and finally ground current.

For three phase selection, phase A is used for angle referencing ($V_{ANGLE\ REF} = V_A$), while Clarke transformation of the phase signals is used for frequency metering and tracking ($V_{FREQUENCY} = (2V_A - V_B - V_C)/3$) for better performance during fault, open pole, and VT and CT fail conditions.

The phase reference and frequency tracking AC signals are selected based upon the source configuration, regardless of whether or not a particular signal is actually applied to the relay.

Phase angle of the reference signal always displays zero degrees and all other phase angles are relative to this signal. If the pre-selected reference signal is not measurable at a given time, the phase angles are not referenced.

The phase angle referencing is done via a phase locked loop, which can synchronize independent UR-series relays if they have the same AC signal reference. This results in very precise correlation of phase angle indications between different UR-series relays.

FREQUENCY TRACKING is set to "Disabled" only in unusual circumstances; consult GE Grid Solutions for special variable-frequency applications.

NOTE

The frequency tracking feature functions only when the F60 is in the "Programmed" mode. If the F60 is "Not Programmed," then metering values are available but can exhibit significant errors.

5.5.3 Signal sources

SETTINGS ⇨⇩ SYSTEM SETUP ⇨⇩ SIGNAL SOURCES ⇨ SOURCE 1(4)

■ SOURCE 1 ■	⇔	**SOURCE 1 NAME:** **SRC 1**	Range: up to six alphanumeric characters
	⇩	**SOURCE 1 PHASE CT:** **None**	Range: None, F1, F5, F1+F5,... up to a combination of any 6 CTs. Only Phase CT inputs are displayed.
	⇩	**SOURCE 1 GROUND CT:** **None**	Range: None, F1, F5, F1+F5,... up to a combination of any 6 CTs. Only Ground CT inputs are displayed.
	⇩	**SOURCE 1 PHASE VT:** **None**	Range: None, F5, M5 Only phase voltage inputs are displayed
	⇧	**SOURCE 1 AUX VT:** **None**	Range: None, F5, M5 Only auxiliary voltage inputs are displayed

Identical menus are available for each source. The "SRC 1" text can be replaced by with a user-defined name appropriate for the associated source.

The first letter in the source identifier represents the module slot position. The number directly following this letter represents either the first bank of four channels (1, 2, 3, 4) called "1" or the second bank of four channels (5, 6, 7, 8) called "5" in a particular CT/VT module. See the Introduction to AC Sources section at the beginning of this chapter for details.

It is possible to select the sum of all CT combinations. The first channel displayed is the CT to which all others are referred. For example, the selection "F1+F5" indicates the sum of each phase from channels "F1" and "F5," scaled to whichever CT has the higher primary current rating. Selecting "None" hides the associated actual values.

The approach used to configure the AC sources consists of several steps; first step is to specify the information about each CT and VT input. For CT inputs, this is the nominal primary and secondary current. For VTs, this is the connection type, ratio and nominal secondary voltage. Once the inputs have been specified, the configuration for each source is entered, including specifying which CTs are summed together.

NOTE

When the F60 is equipped with a type 8Z CT/VT module for high impedance fault detection, do not assign the CT bank of this module to a source that is used by any conventional protection element. The type 8Z module CT bank is used solely by the high impedance fault detection algorithm.

5.5.3.1 User selection of AC parameters for comparator elements

CT/VT modules automatically calculate all current and voltage parameters from the available inputs. Users must select the specific input parameters to be measured by every element in the relevant settings menu. The internal design of the element specifies which type of parameter to use and provides a setting for source selection. In elements where the parameter can be either fundamental or RMS magnitude, such as phase time overcurrent, two settings are provided. One setting specifies the source, the second setting selects between fundamental phasor and RMS.

5.5.3.2 AC input actual values

The calculated parameters associated with the configured voltage and current inputs are displayed in the current and voltage sections of actual values. Only the phasor quantities associated with the actual AC physical input channels display here. All parameters contained within a configured source are displayed in the sources section of the actual values.

5.5.3.3 Disturbance detectors (internal)

The disturbance detector (ANSI 50DD) element is a sensitive current disturbance detector that detects any disturbance on the protected system. The 50DD function is used directly in some elements in the relay, for example VT Fuse Failure detector or Fault Report. It can also be used to supervise current-based elements to prevent maloperation as a result of the wrong settings or external CT wiring problem. A disturbance detector is provided for each source.

The 50DD function responds to the changes in magnitude of the sequence currents. The disturbance detector logic is as follows.

Figure 5-47: Disturbance detector logic

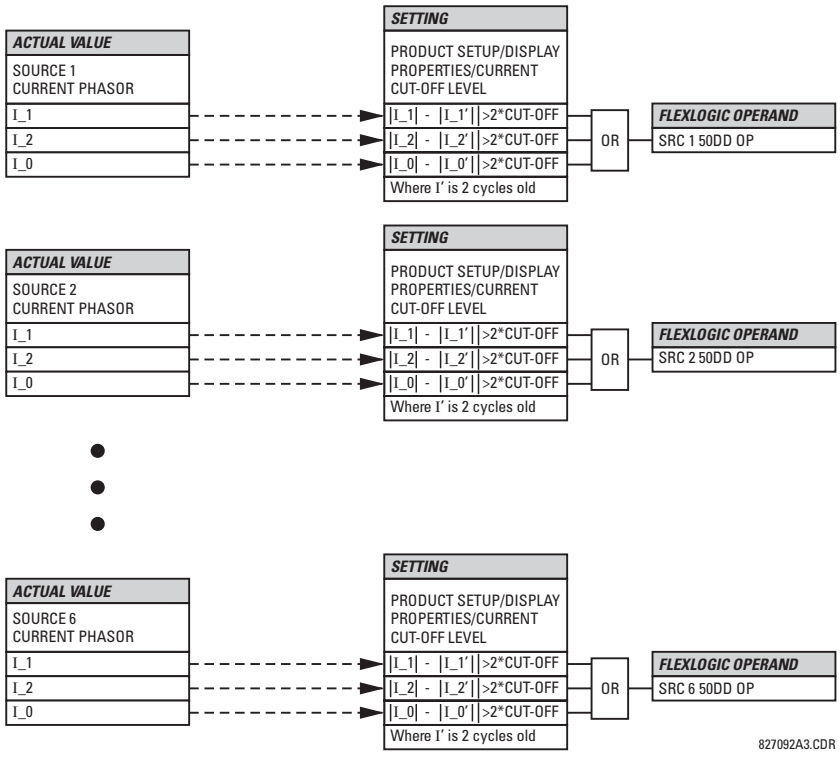

The disturbance detector responds to the change in currents of twice the current cut-off level. The default cut-off threshold is 0.02 pu; thus by default the disturbance detector responds to a change of 0.04 pu. The metering sensitivity setting (**PRODUCT SETUP ⇨⇩ DISPLAY PROPERTIES ⇨⇩ CURRENT CUT-OFF LEVEL**) controls the sensitivity of the disturbance detector accordingly.

5.5.3.4 Example for use of sources

An example of the use of sources is shown in the following figure. A relay can have the following hardware configuration:

	Increasing slot position letter -->		
UR	**CT/VT module 1**	**CT/VT module 2**	**CT/VT module 3**
B30, B90, C70, F35, N60, T35	8 CTs	4 CTs, 4 VTs	4 CTs, 4 VTs
C60, D60, G30, G60, L30, L90, M60, T60	CTs	VTs	not applicable

This configuration can be used on a two-winding transformer, with one winding connected into a breaker-and-a-half system. The following figure shows the arrangement of sources used to provide the functions required in this application, and the CT/VT inputs that are used to provide the data.

Figure 5-48: Example of use of sources

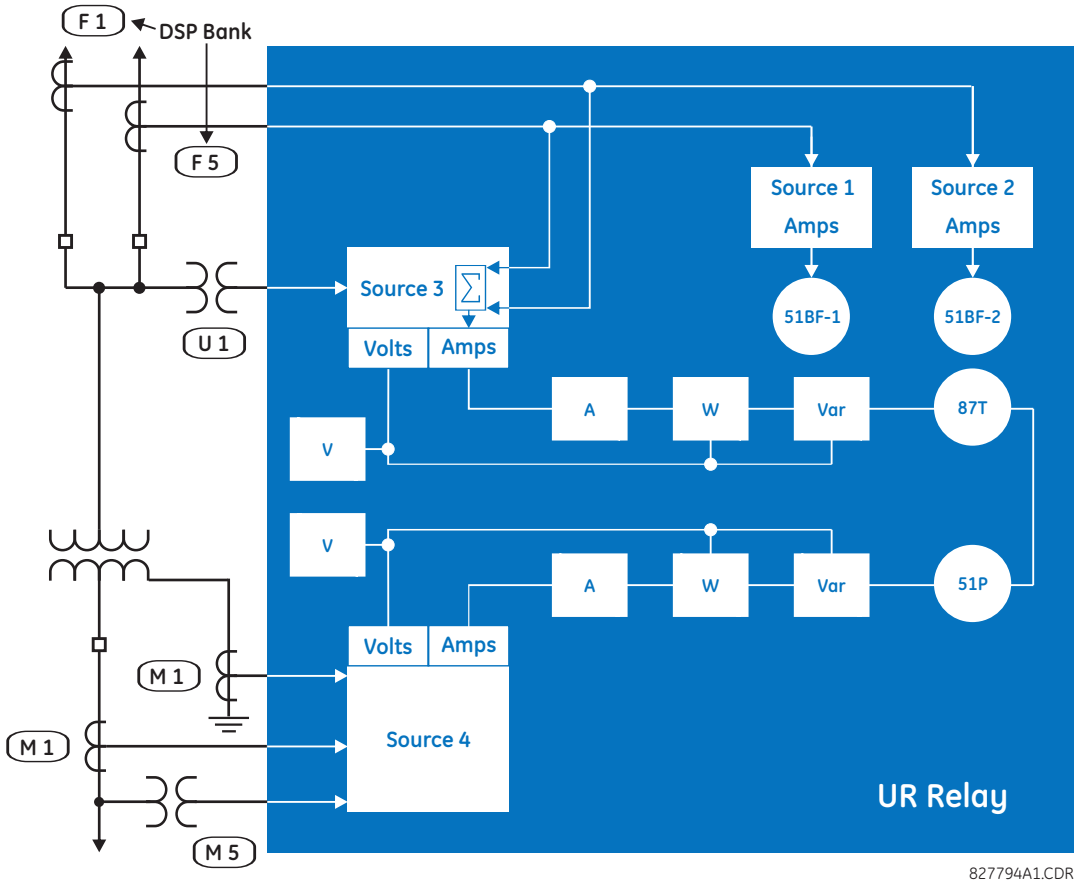

	Y LV	D HV	AUX
	SRC 1	SRC 2	SRC 3
Phase CT	M1	F1+F5	None
Ground CT	M1	None	None
Phase VT	M5	None	None
Aux VT	None	None	U1

5.5.4 Breakers

SETTINGS ⇨⇩ SYSTEM SETUP ⇨⇩ BREAKERS ⇨ BREAKER 1(4)

■ BREAKER 1 ■	⇔	**BREAKER 1 FUNCTION: Disabled**	Range: Disabled, Enabled
	⇳	**BREAKER1 PUSH BUTTON CONTROL: Disabled**	Range: Disabled, Enabled
	⇳	**BREAKER 1 NAME: Bkr 1**	Range: up to six alphanumeric characters
	⇳	**BREAKER 1 MODE: 3-Pole**	Range: 3-Pole, 1-Pole
	⇳	**BREAKER 1 OPEN: Off**	Range: FlexLogic operand

⇳	**BREAKER 1 BLK OPEN:** **Off**	Range: FlexLogic operand
⇳	**BREAKER 1 CLOSE:** **Off**	Range: FlexLogic operand
⇳	**BREAKER 1 BLK CLOSE:** **Off**	Range: FlexLogic operand
⇳	**BREAKER1 ΦA/3P CLSD:** **Off**	Range: FlexLogic operand
⇳	**BREAKER1 ΦA/3P OPND:** **Off**	Range: FlexLogic operand
⇳	**BREAKER 1 ΦB CLOSED:** **Off**	Range: FlexLogic operand
⇳	**BREAKER 1 ΦB OPENED:** **Off**	Range: FlexLogic operand
⇳	**BREAKER 1 ΦC CLOSED:** **Off**	Range: FlexLogic operand
⇳	**BREAKER 1 ΦC OPENED:** **Off**	Range: FlexLogic operand
⇳	**BREAKER 1 TOPERATE:** **70 ms**	Range: 0 to 65535 s in steps of 1
⇳	**BREAKER 1 EXT ALARM:** **Off**	Range: FlexLogic operand
⇳	**BREAKER 1 ALARM DELAY: 0.000 s**	Range: 0.000 to 65.535 s in steps of 0.001
⇳	**MANUAL CLOSE RECAL1 TIME: 0.000 s**	Range: 0.000 to 65.535 s in steps of 0.001
⇳	**BREAKER 1 OUT OF SV:** **Off**	Range: FlexLogic operand
⇧	**BREAKER 1 EVENTS:** **Disabled**	Range: Disabled, Enabled

A description of the operation of the breaker control and status monitoring features is provided in chapter 4. Information to program the settings is covered here. These features are provided for two or more breakers; a user can use only those portions of the design relevant to a single breaker, which must be breaker 1.

The number of breaker control elements depends on the number of CT/VT modules specified with the F60. The following settings are available for each breaker control element.

BREAKER 1 FUNCTION — This setting enables and disables the operation of the breaker control feature.

BREAKER1 PUSH BUTTON CONTROL — Set to "Enable" to allow faceplate pushbutton operations.

BREAKER 1 NAME — Assign a user-defined name (up to six characters) to the breaker. This name is used in flash messages related to breaker 1.

BREAKER 1 MODE — Selects "3-Pole" mode, where all breaker poles are operated simultaneously, or "1-Pole" mode where all breaker poles are operated either independently or simultaneously.

BREAKER 1 OPEN — Selects an operand that creates a programmable signal to operate an output relay to open breaker 1.

BREAKER 1 BLK OPEN — Selects an operand that prevents opening of the breaker. This setting can be used for select-before-operate functionality or to block operation from a panel switch or from SCADA.

BREAKER 1 CLOSE — Selects an operand that creates a programmable signal to operate an output relay to close breaker 1.

BREAKER 1 BLK CLOSE — Selects an operand that prevents closing of the breaker. This setting can be used for select-before-operate functionality or to block operation from a panel switch or from SCADA.

BREAKER1 ΦA/3P CLOSED — Selects an operand, usually a contact input connected to a breaker auxiliary position tracking mechanism. This input is a normally-open 52/a status input to create a logic 1 when the breaker is closed. If the **BREAKER 1 MODE** setting is selected as "3-Pole," this setting selects a single input as the operand used to track the breaker open or closed position. If the mode is selected as "1-Pole," the input mentioned is used to track phase A and the **BREAKER 1 ΦB** and **BREAKER 1 ΦC** settings select operands to track phases B and C, respectively.

BREAKER1 ΦA/3P OPND — Selects an operand, usually a contact input, that is a normally-closed 52/b status input to create a logic 1 when the breaker is open. If a separate 52/b contact input is not available, then the inverted BREAKER 1 CLOSED status signal can be used.

BREAKER 1 ΦB CLOSED — If the mode is selected as three-pole, this setting has no function. If the mode is selected as single-pole, this input is used to track the breaker phase B closed position as outlined for phase A.

BREAKER 1 ΦB OPENED — If the mode is selected as three-pole, this setting has no function. If the mode is selected as single-pole, this input is used to track the breaker phase B opened position as outlined for phase A.

BREAKER 1 ΦC CLOSED — If the mode is selected as three-pole, this setting has no function. If the mode is selected as single-pole, this input is used to track the breaker phase C closed position as outlined for phase A.

BREAKER 1 ΦC OPENED — If the mode is selected as three-pole, this setting has no function. If the mode is selected as single-pole, this input is used to track the breaker phase C opened position as outlined for phase A.

BREAKER 1 TOPERATE — This setting specifies the required interval to overcome transient disagreement between the 52/a and 52/b auxiliary contacts during breaker operation. If transient disagreement still exists after this time has expired, the BREAKER 1 BAD STATUS FlexLogic operand is asserted from alarm or blocking purposes.

BREAKER 1 EXT ALARM — This setting selects an operand, usually an external contact input, connected to a breaker alarm reporting contact.

BREAKER 1 ALARM DELAY — This setting specifies the delay interval during which a disagreement of status among the three-pole position tracking operands does not declare a pole disagreement. This allows for non-simultaneous operation of the poles.

MANUAL CLOSE RECAL1 TIME — This setting specifies the interval required to maintain setting changes in effect after an operator has initiated a manual close command to operate a circuit breaker.

BREAKER 1 OUT OF SV — Selects an operand indicating that breaker 1 is out-of-service.

IEC 61850 functionality is permitted when the F60 is in "Programmed" mode and not in local control mode.

Figure 5-49: Dual breaker control logic (Sheet 1 of 2)

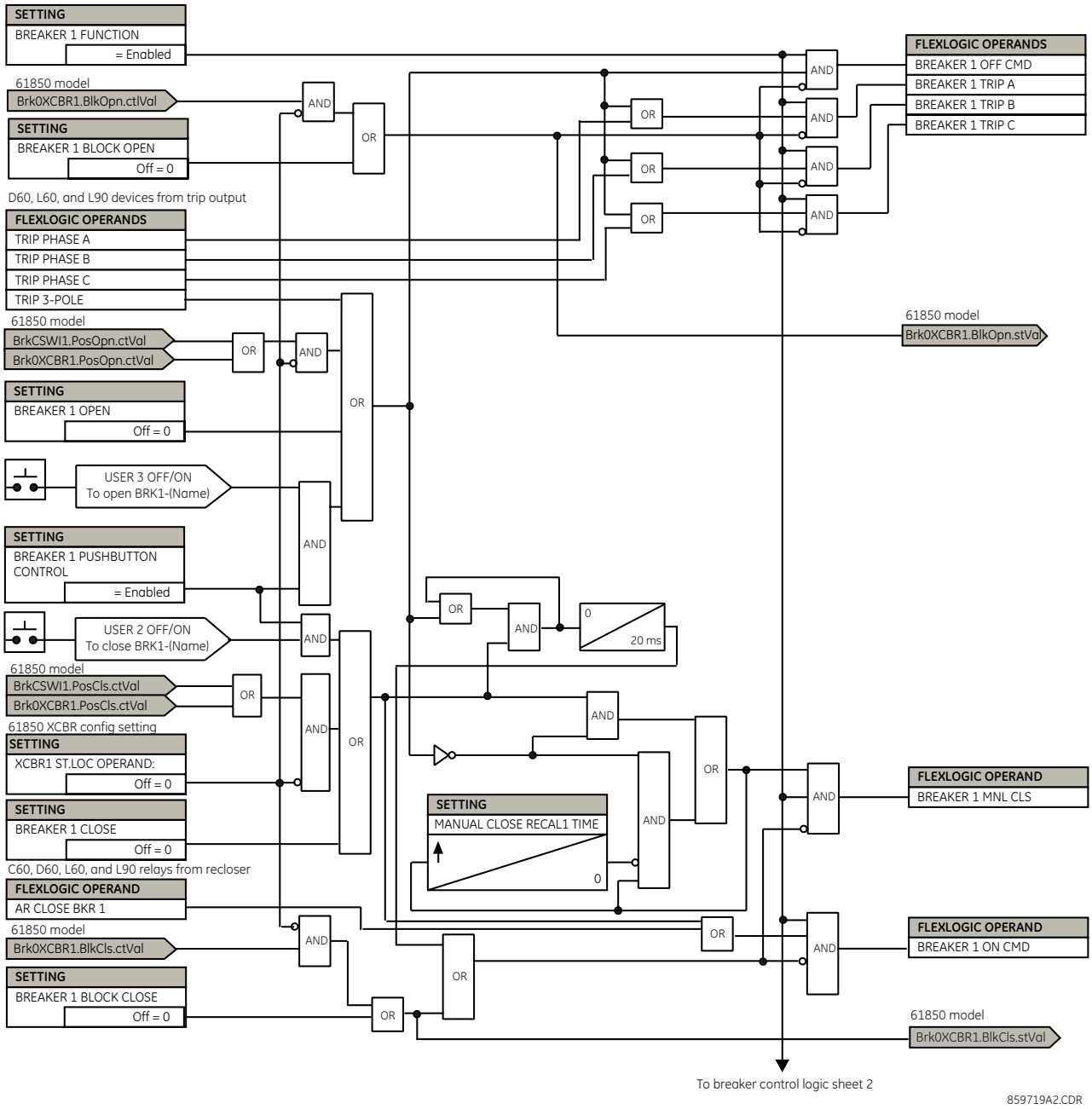

Figure 5-50: Dual breaker control logic (Sheet 2 of 2)

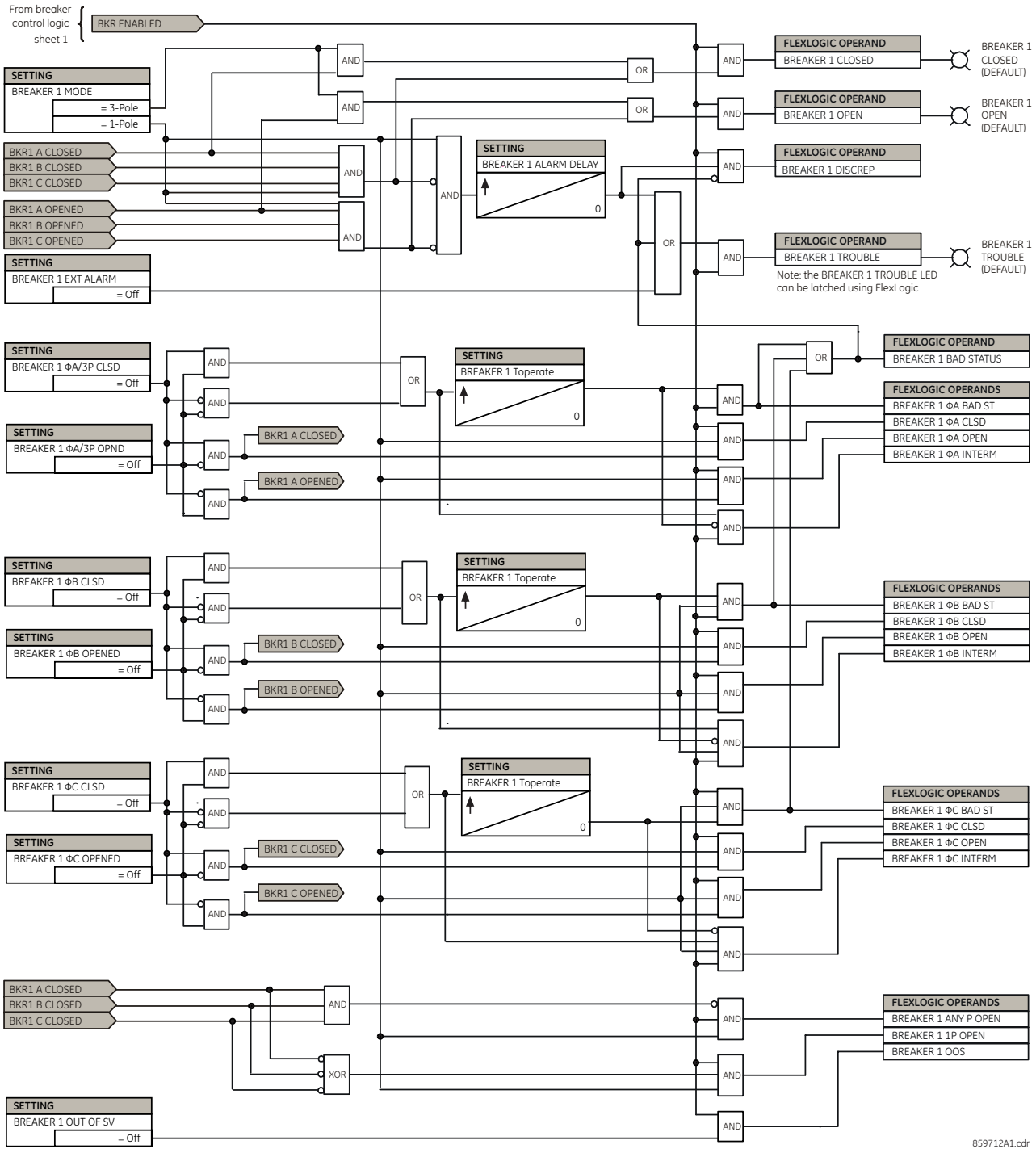

The breaker element has direct hard-coded connections to the IEC 61850 model as shown in the logic diagram. This allows remote open/close operation of each breaker, using either CSWI or XCBR IEC 61850 logical nodes. IEC 61850 select-before-operate functionality, local/remote switch functionality, along with blocking of open/close commands are provided. Note that the dwell time for the IEC 61850 trip and close commands shown is one protection pass only. To maintain the close/open command for a certain time, do so on the contact outputs using the "Seal-in" setting, in the Trip Output element, or in FlexLogic.

5.5.5 Disconnect switches

SETTINGS ⇨⇩ SYSTEM SETUP ⇨⇩ SWITCHES ⇨⇩ SWITCH 1(16)

■ SWITCH 1 ■	⇔	**SWITCH 1 FUNCTION: Disabled**	Range: Disabled, Enabled
	⇕	**SWITCH 1 NAME: SW 1**	Range: up to six alphanumeric characters
	⇕	**SWITCH 1 MODE: 3-Pole**	Range: 3-Pole, 1-Pole
	⇕	**SWITCH 1 OPEN: Off**	Range: FlexLogic operand
	⇕	**SWITCH 1 BLK OPEN: Off**	Range: FlexLogic operand
	⇕	**SWITCH 1 CLOSE: Off**	Range: FlexLogic operand
	⇕	**SWITCH 1 BLK CLOSE: Off**	Range: FlexLogic operand
	⇕	**SWTCH 1 ΦA/3P CLSD: Off**	Range: FlexLogic operand
	⇕	**SWTCH 1 ΦA/3P OPND: Off**	Range: FlexLogic operand
	⇕	**SWITCH 1 ΦB CLOSED: Off**	Range: FlexLogic operand
	⇕	**SWITCH 1 ΦB OPENED: Off**	Range: FlexLogic operand
	⇕	**SWITCH 1 ΦC CLOSED: Off**	Range: FlexLogic operand
	⇕	**SWITCH 1 ΦC OPENED: Off**	Range: FlexLogic operand
	⇕	**SWITCH 1 TOPERATE: 70 ms**	Range: 0 to 65535 ms in steps of 1
	⇕	**SWITCH 1 ALARM DELAY: 0.000 s**	Range: 0.000 to 65.535 s in steps of 0.001
	⇧	**SWITCH 1 EVENTS: Disabled**	Range: Disabled, Enabled

The disconnect switch control element contains the auxiliary logic for status and serves as the interface for opening and closing of disconnect switches from SCADA or through the front panel interface. The disconnect switch control element can be used to create interlocking functionality. For greater security in determination of the switch pole position, both the 89/a and 89/b auxiliary contacts are used with reporting of the discrepancy between them. The number of available disconnect switches is four per breaker.

To use this element, configure the contact outputs that open and close the disconnect switch to use FlexLogic operands SWITCH 1 OFF CMD and SWITCH 1 ON CMD, and configure the disconnect switch control element's inputs as outlined here.

SWITCH 1 FUNCTION — This setting enables and disables operation of the disconnect switch element.

SWITCH 1 NAME — Assign a user-defined name (up to six characters) to the disconnect switch. This name is used in flash messages related to disconnect switch 1.

SWITCH 1 MODE — This setting selects "3-Pole" mode, where disconnect switch poles have a single common auxiliary switch, or "1-Pole" mode where each disconnect switch pole has its own auxiliary switch.

SWITCH 1 OPEN — This setting selects an operand that when activated, and unless blocked, initiates the disconnect switch 1 open command.

SWITCH 1 BLK OPEN — This setting selects an operand that prevents initiation of the disconnect switch 1 command. This setting can be used for blocking disconnect switch opening for instance when switchyard monitoring indicates current exceeding the switch's interrupting rating can be flowing through the switch.

SWITCH 1 CLOSE — This setting selects an operand that when activated, and unless blocked, initiates the disconnect switch 1 close command.

SWITCH 1 BLK CLOSE — This setting selects an operand that prevents initiation of disconnect switch 1 close commands. This setting can be used for blocking disconnect switch closing, for instance to prevent closing into a closed ground switch.

SWTCH 1 ΦA/3P CLSD — This setting selects an operand, usually a contact input connected to a disconnect switch auxiliary position tracking mechanism. This input is for a normally-open 89/a status input that creates a logic 1 when the disconnect switch is closed. If the **SWITCH 1 MODE** setting is selected as "3-Pole," this setting selects a single 89/a input as the operand used to track the disconnect switch open or closed position. If the mode is selected as "1-Pole," the input mentioned is used to track phase A and the **SWITCH 1 ΦB** and **SWITCH 1 ΦC** settings select operands to track phases B and C, respectively.

SWTCH 1 ΦA/3P OPND — This setting selects an operand, usually a contact input, that is for a normally-closed 89/b status input that creates a logic 1 when the disconnect switch is open. If a separate 89/b contact input is not available, then an inverted 89/a status signal can be used.

SWITCH 1 ΦB CLOSED — If the mode is selected as three-pole, this setting has no function. If the mode is selected as single-pole, this input is used to track the disconnect switch phase B closed position as outlined for phase A.

SWITCH 1 ΦB OPENED — If the mode is selected as three-pole, this setting has no function. If the mode is selected as single-pole, this input is used to track the disconnect switch phase B opened position as outlined for phase A.

SWITCH 1 ΦC CLOSED — If the mode is selected as three-pole, this setting has no function. If the mode is selected as single-pole, this input is used to track the disconnect switch phase C closed position as outlined for phase A.

SWITCH 1 ΦC OPENED — If the mode is selected as three-pole, this setting has no function. If the mode is selected as single-pole, this input is used to track the disconnect switch phase C opened position as outlined for phase A.

SWITCH 1 TOPERATE — This setting specifies the required interval to overcome transient disagreement between the 89/a and 89/b auxiliary contacts during disconnect switch operation. If transient disagreement still exists after this time has expired, the SWITCH 1 BAD STATUS FlexLogic operand is asserted for alarm or blocking purposes.

SWITCH 1 ALARM DELAY — This setting specifies the delay interval during which a disagreement of status among the pole position tracking operands do not declare a pole disagreement. This allows for non-simultaneous operation of the poles.

IEC 61850 functionality is permitted when the F60 is in "Programmed" mode and not in local control mode.

Figure 5-51: Disconnect switch logic

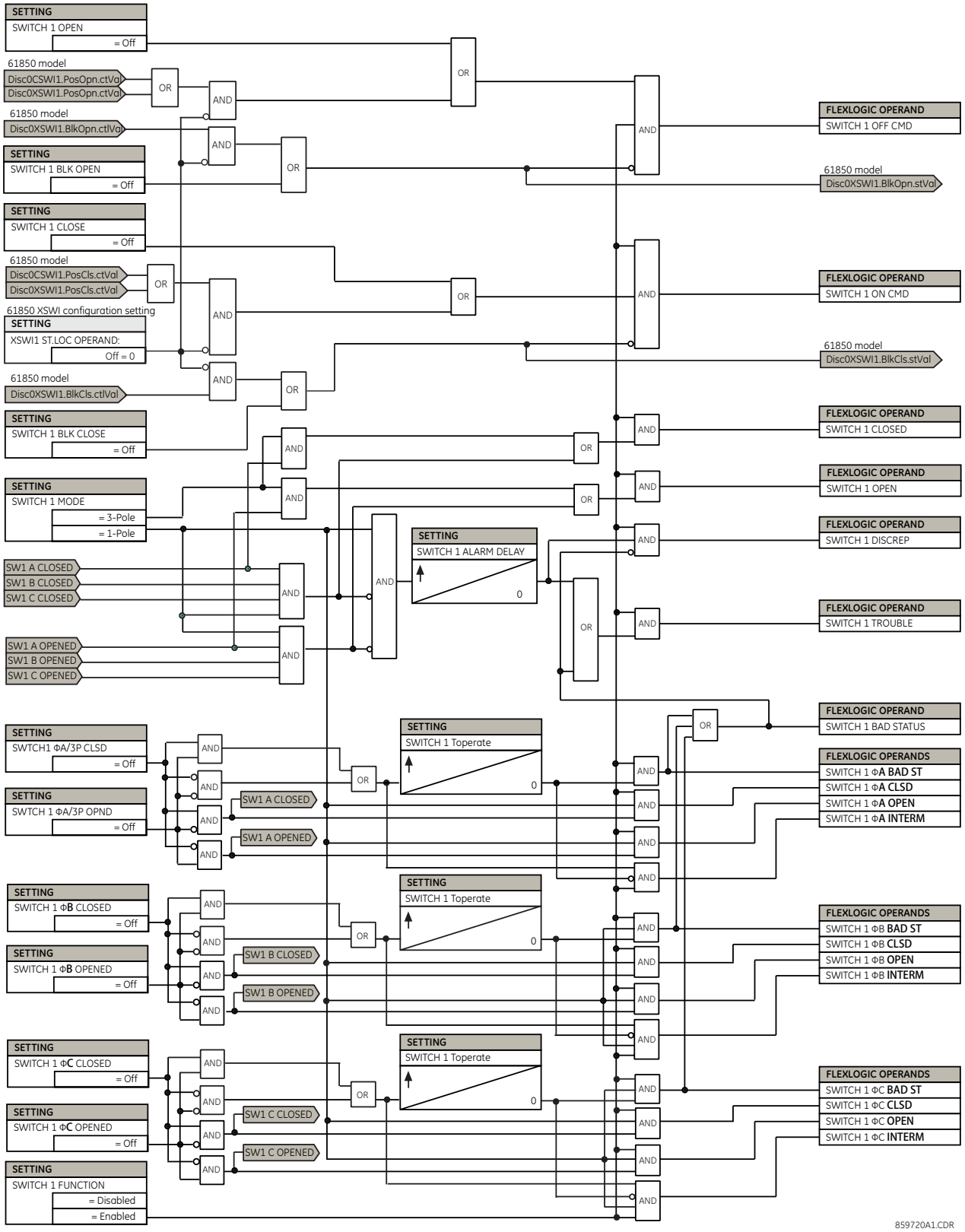

The switch element has direct hard-coded connections to the IEC 61850 model as shown in the logic diagram. This allows remote open/close operation of each switch, using either CSWI or XSWI IEC 61850 logical nodes. IEC 61850 select-before-operate functionality, local/remote switch functionality, along with blocking open/close commands are provided. Note that the dwell time for the IEC 61850 trip and close commands shown is one protection pass only. To maintain close/open command for a certain time, do so either on the contact outputs using the "Seal-in" setting or in FlexLogic.

5.5.6 FlexCurves

5.5.6.1 Settings

SETTINGS ⇨⇩ SYSTEM SETUP ⇨⇩ FLEXCURVES ⇨⇩ FLEXCURE A(D)

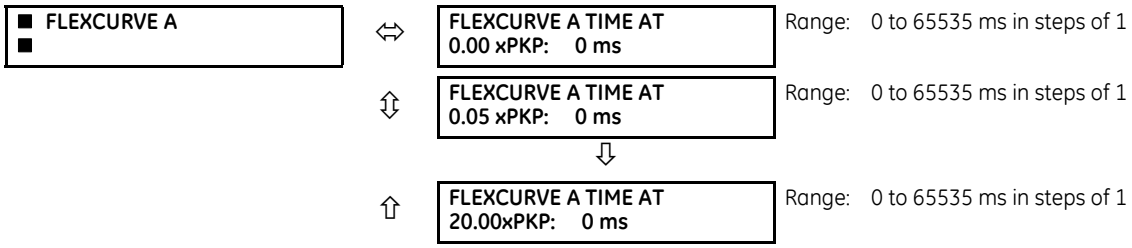

FlexCurves A through D have settings for entering times to reset and operate at the following pickup levels: 0.00 to 0.98 and 1.03 to 20.00. This data is converted into two continuous curves by linear interpolation between data points. To enter a custom FlexCurve, enter the reset and operate times (using the **VALUE** keys) for each selected pickup point (using the **MESSAGE** up/down keys) for the required protection curve (A, B, C, or D).

5

Table 5-16: FlexCurve table

Reset	Time ms	Reset	Time ms	Operate	Time ms	Operate	Time ms	Operate	Time ms	Operate	Time ms
0.00		0.68		1.03		2.9		4.9		10.5	
0.05		0.70		1.05		3.0		5.0		11.0	
0.10		0.72		1.1		3.1		5.1		11.5	
0.15		0.74		1.2		3.2		5.2		12.0	
0.20		0.76		1.3		3.3		5.3		12.5	
0.25		0.78		1.4		3.4		5.4		13.0	
0.30		0.80		1.5		3.5		5.5		13.5	
0.35		0.82		1.6		3.6		5.6		14.0	
0.40		0.84		1.7		3.7		5.7		14.5	
0.45		0.86		1.8		3.8		5.8		15.0	
0.48		0.88		1.9		3.9		5.9		15.5	
0.50		0.90		2.0		4.0		6.0		16.0	
0.52		0.91		2.1		4.1		6.5		16.5	
0.54		0.92		2.2		4.2		7.0		17.0	
0.56		0.93		2.3		4.3		7.5		17.5	
0.58		0.94		2.4		4.4		8.0		18.0	
0.60		0.95		2.5		4.5		8.5		18.5	
0.62		0.96		2.6		4.6		9.0		19.0	
0.64		0.97		2.7		4.7		9.5		19.5	
0.66		0.98		2.8		4.8		10.0		20.0	

NOTE

The relay using a given FlexCurve applies linear approximation for times between the user-entered points. Take care when setting the two points that are close to the multiple of pickup of 1; that is, 0.98 pu and 1.03 pu. It is recommended to set the two times to a similar value, otherwise the linear approximation can result in undesired behavior for the operating quantity that is close to 1.00 pu.

5.5.6.2 FlexCurve configuration with EnerVista software

The EnerVista software allows for easy configuration and management of FlexCurves and their associated data points. Prospective FlexCurves can be configured from a selection of standard curves to provide the best approximate fit, then specific data points can be edited afterwards. Alternately, curve data can be imported from a specified file (.csv format) by selecting the EnerVista **Import Data From** setting (**Settings > System Setup > FlexCurves > FlexCurve**).

Curves and data can be exported, viewed, and cleared by clicking the appropriate buttons. FlexCurves are customized by editing the operating time (ms) values at pre-defined per-unit current multiples. Note that the pickup multiples start at zero (implying the "reset time"), operating time below pickup, and operating time above pickup.

5.5.6.3 Recloser curve editing

Recloser curve selection is special in that recloser curves can be shaped into a composite curve with a minimum response time and a fixed time above a specified pickup multiples. There are 41 recloser curve types supported. These definite operating times are useful to coordinate operating times, typically at higher currents and where upstream and downstream protective devices have different operating characteristics. The recloser curve configuration window shown here appears when the **Initialize From** setting in the EnerVista software is set to "Recloser Curve" and the **Initialize FlexCurve** button is clicked.

Figure 5-52: Recloser curve initialization

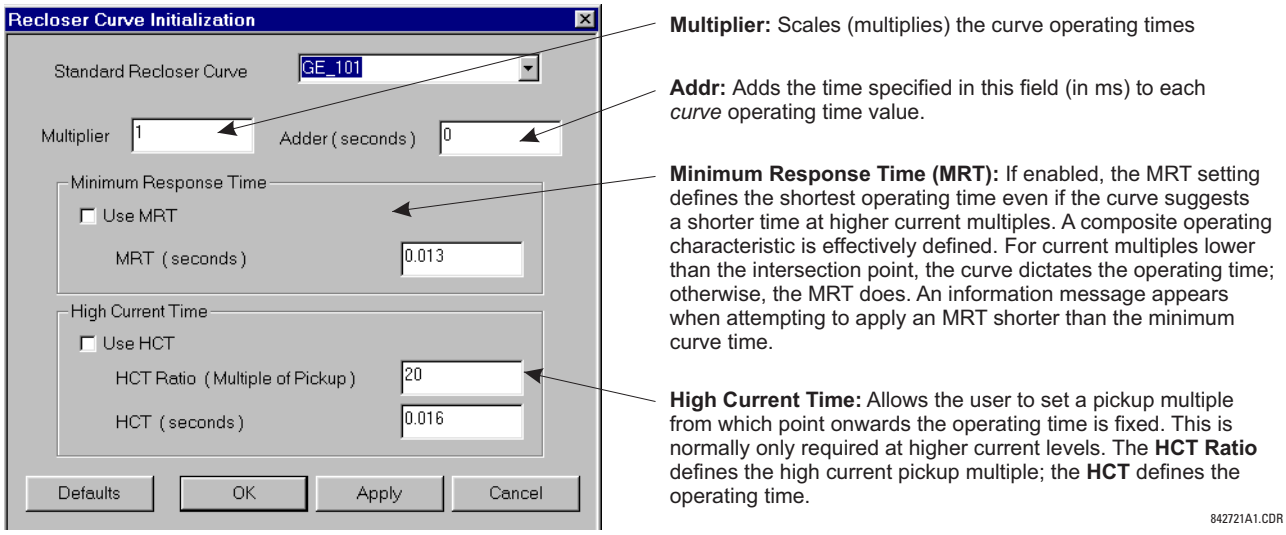

NOTE

The **Multiplier** and **Adder** settings only affect the curve portion of the characteristic and not the MRT and HCT settings. The HCT settings override the MRT settings for multiples of pickup greater than the HCT ratio.

5.5.6.4 Example

A composite curve can be created from the GE_111 standard with MRT = 200 ms and HCT initially disabled and then enabled at eight times pickup with an operating time of 30 ms. At approximately four times pickup, the curve operating time is equal to the MRT and from then onwards the operating time remains at 200 ms.

Figure 5-53: Composite recloser curve with HCT disabled

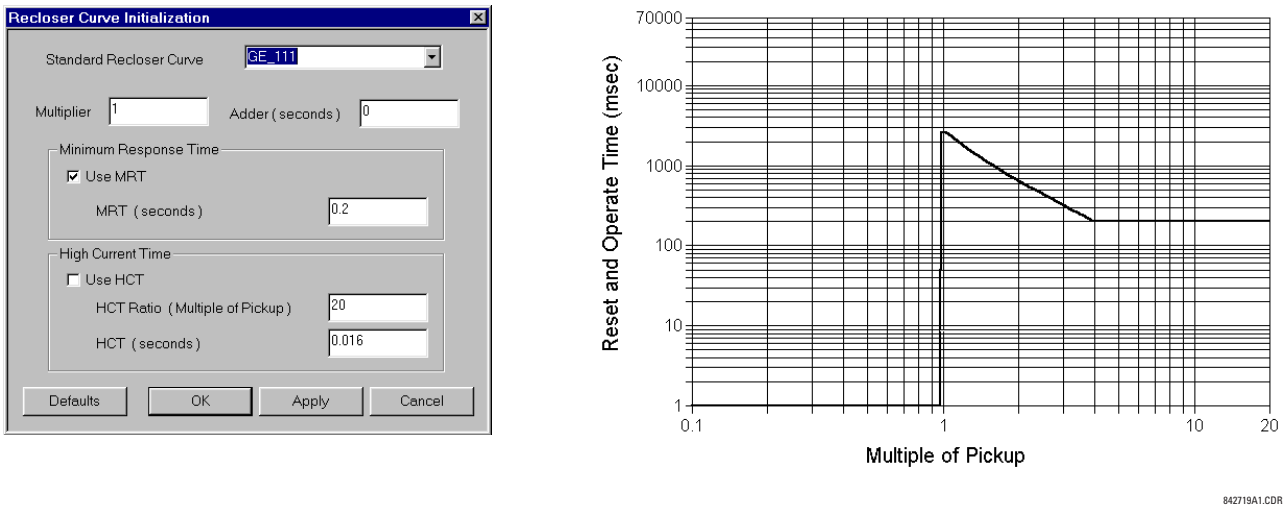

With the HCT feature enabled, the operating time reduces to 30 ms for pickup multiples exceeding eight times pickup.

Figure 5-54: Composite recloser curve with HCT enabled

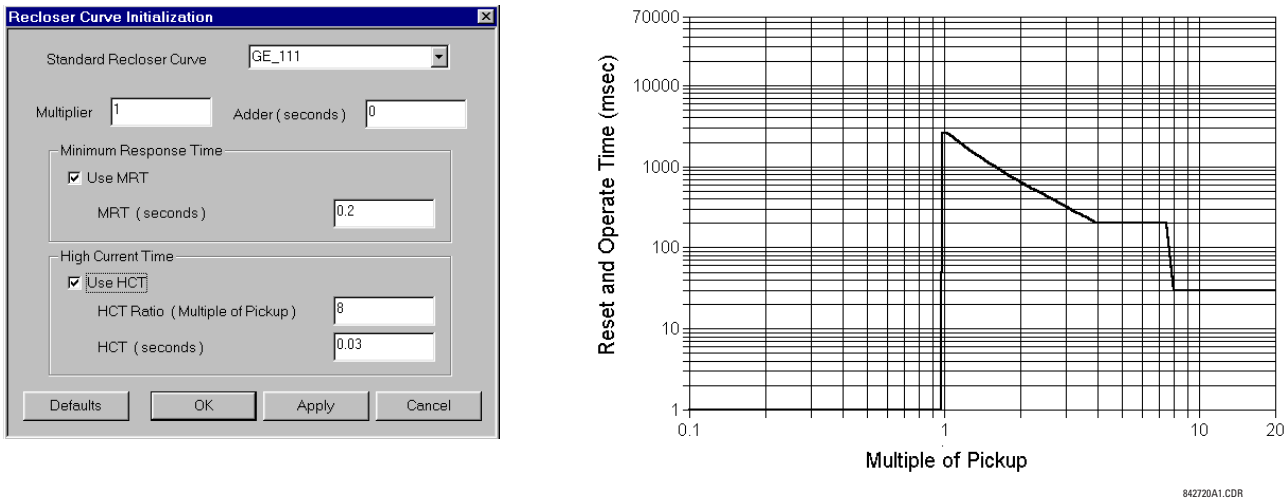

NOTE

Configuring a composite curve with an increase in operating time at increased pickup multiples is not allowed. If this is attempted, the EnerVista software generates an error message and discards the proposed changes.

5.5.6.5 Standard recloser curves

The following graphs display standard recloser curves available for the F60.

Figure 5-55: Recloser curves GE101 to GE106

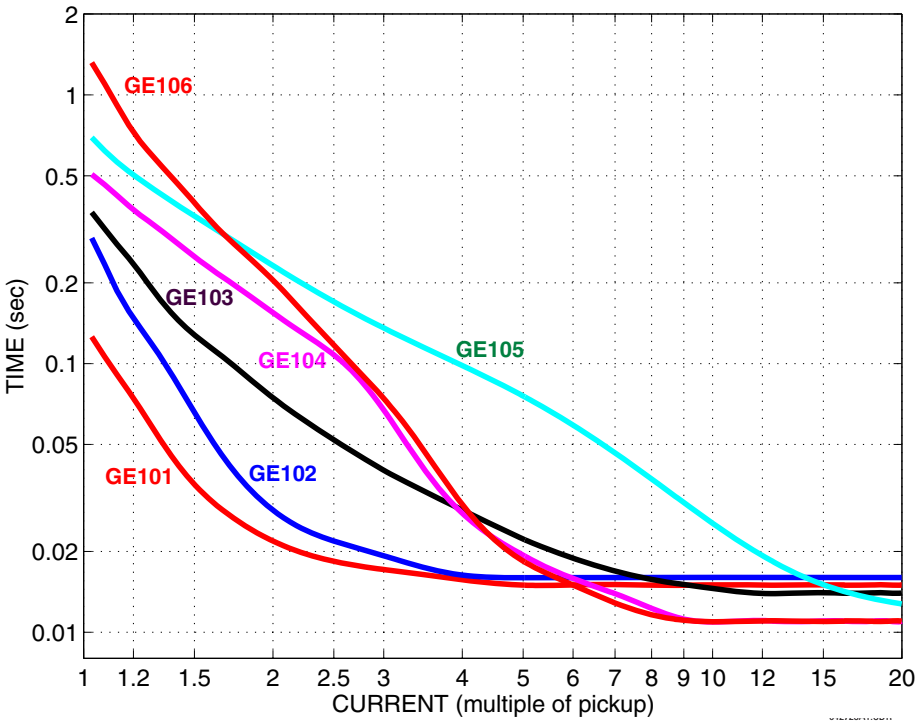

Figure 5-56: Recloser curves GE113, GE120, GE138, and GE142

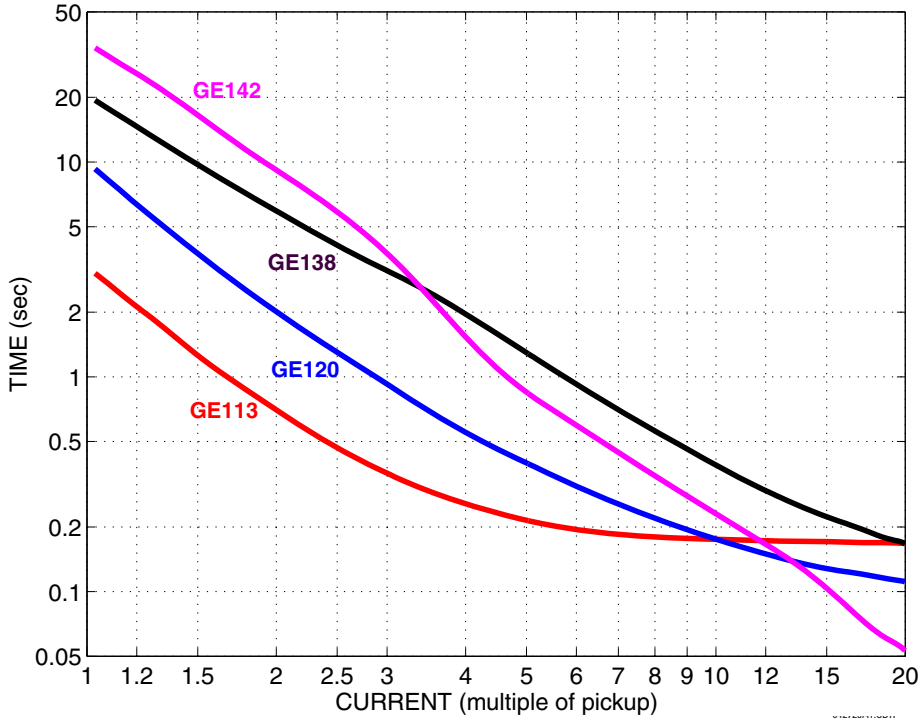

Figure 5-57: Recloser curves GE134, GE137, GE140, GE151, and GE201

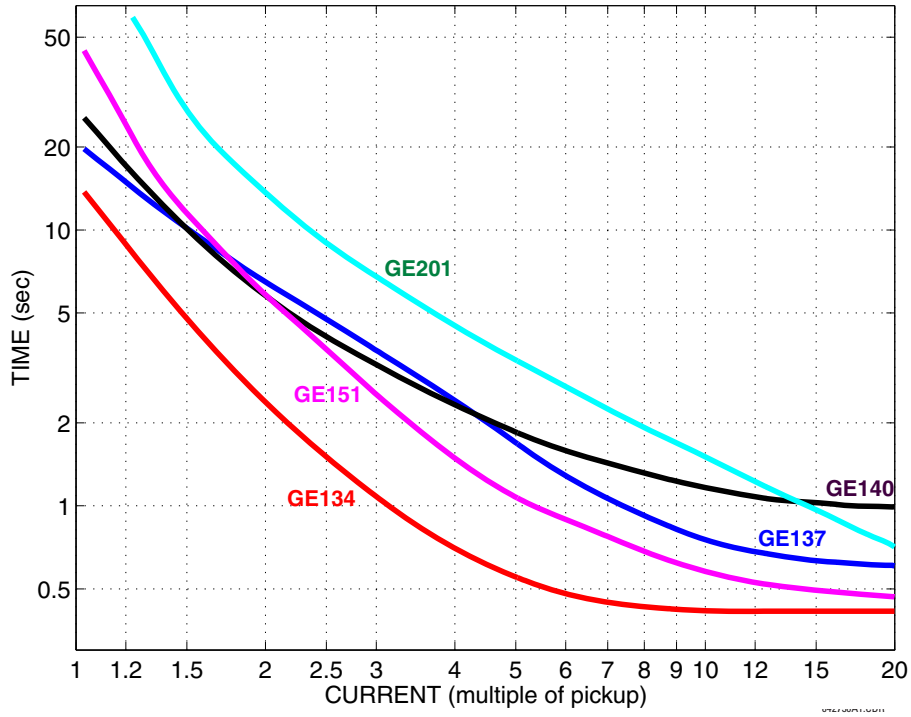

Figure 5-58: Recloser curves GE131, GE141, GE152, and GE200

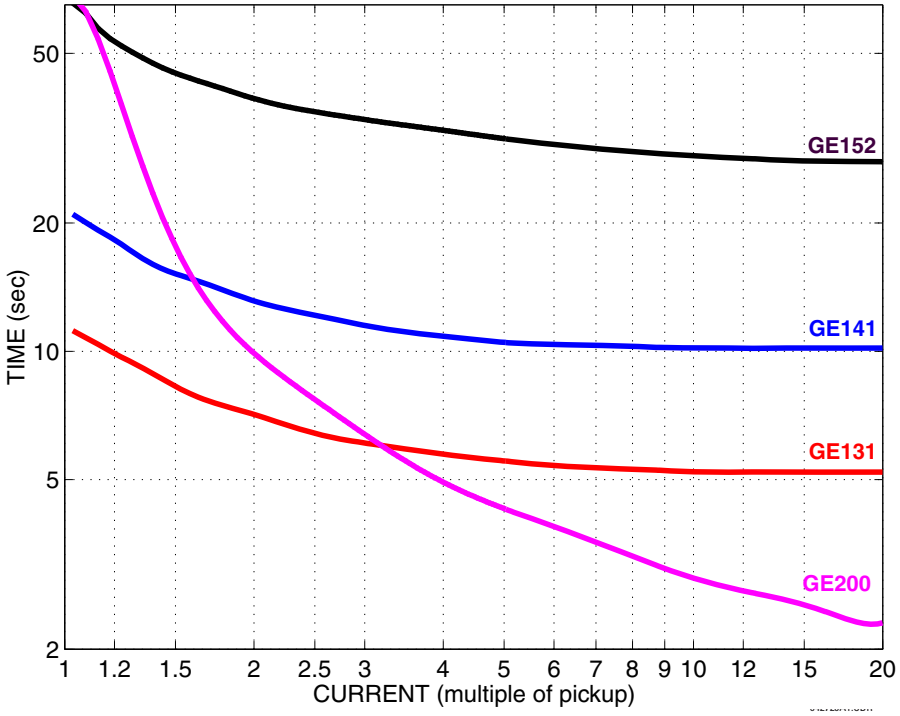

Figure 5-59: Recloser curves GE133, GE161, GE162, GE163, GE164, and GE165

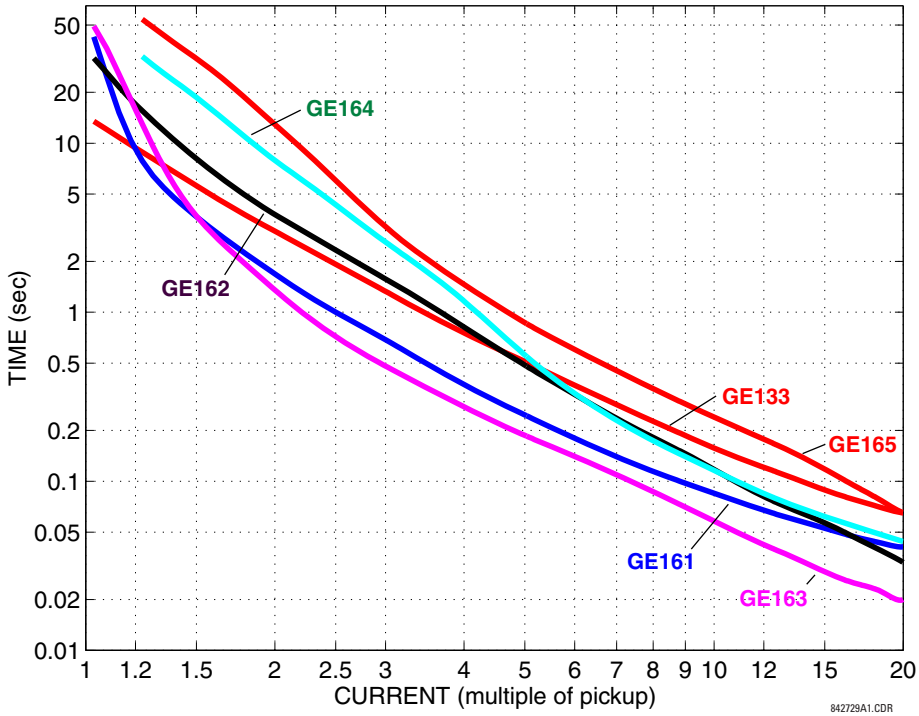

Figure 5-60: Recloser curves GE116, GE117, GE118, GE132, GE136, and GE139

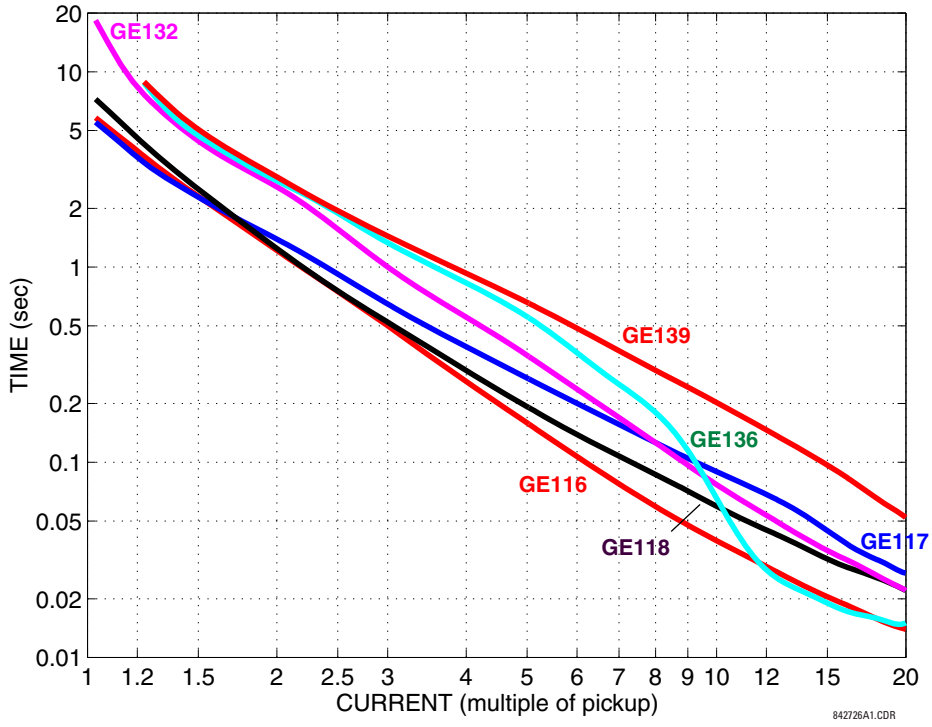

Figure 5-61: Recloser curves GE107, GE111, GE112, GE114, GE115, GE121, and GE122

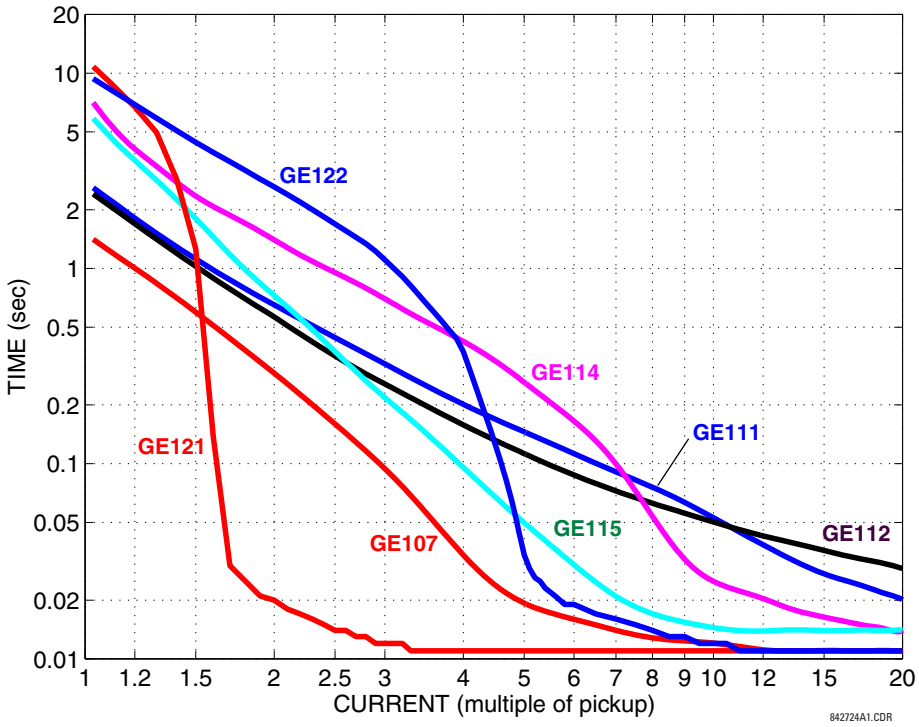

Figure 5-62: Recloser curves GE119, GE135, and GE202

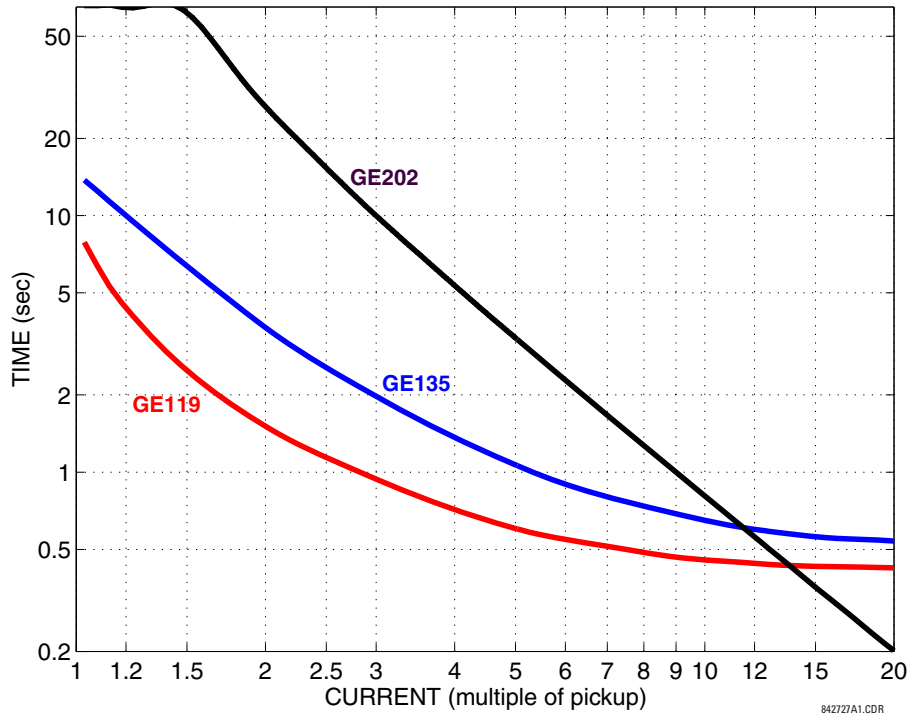

5.5.7 Phasor Measurement Unit

5.5.7.1 Menu

SETTINGS ⇨⇩ SYSTEM SETUP ⇨⇩ PHASOR MEASUREMENT UNIT

■ PHASOR MEASUREMENT ■ UNIT	⇔	■ PHASOR MEASUREMENT ■ UNIT 1	See below
	⇕	■ AGGREGATOR ■ UNIT 1	See page 5-154
	⇧	■ IEC 90-5 MSVCB ■ CONFIGURATION	See page 5-156

The F60 is provided with an optional Phasor Measurement Unit (PMU) feature. This feature is specified as a software option at the time of ordering. The number of PMUs available also depends on this option. Using the order code for your device, see the order codes in chapter 2 for details.

5.5.7.2 UR synchrophasor implementation

Phasors are used in protection relays. When these phasors are referenced to a common time base, they are referred to as synchrophasors. A vastly improved method for tracking power system dynamic phenomena for power system monitoring, protection, operation, and control can be realized when synchrophasors from different locations within the power system are networked to a central location.

The F60 offers PMU features over two communication standards, IEC 61850-90-5 and IEEE C37.118. The figure shows complete synchrophasor implementation.

Figure 5-63: Synchrophasor implementation

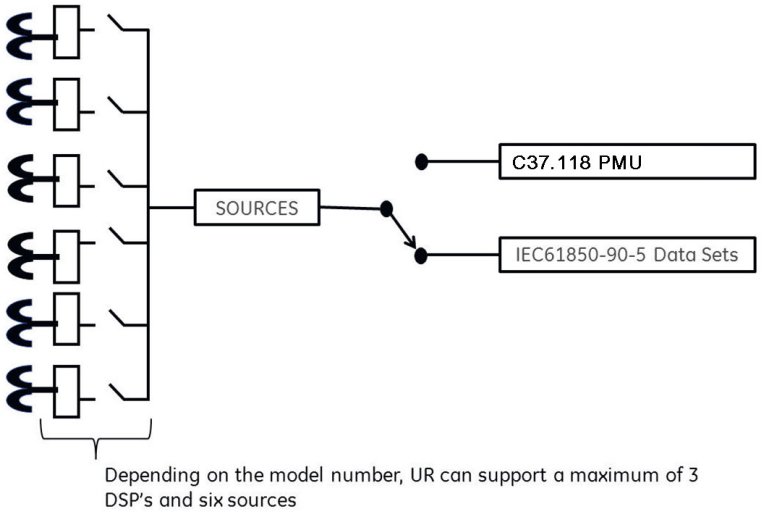

5.5.7.3 UR implementation of IEC 61850-90-5

Synchrophasor data as measured and calculated by PMUs is used to assess the condition of the electrical power network. The IEEE C37.118 standards define synchrophasors and related message formats to transmit synchrophasor data. Synchrophasor streaming via IEEE C37.118 has proven to work but the need to have a communication mechanism that is compliant with the concept of IEC 61850 has led to the development of IEC 61850-90-5. The IEC 61850-90-5 technical report defines the packet structure for multicast routing of streamed Sampled Value (SV) known as R-SV.

UR firmware versions 7.0 and above have a 90-5 based R-SV implementation equivalent in structure and configuration to that of the existing IEEE C37.118 implementation of firmware version 6.0, that is, synchrophasor data at rates up to 60 Hz for metering and 120 Hz for protection class synchrophasors. The following two figures depict the general data flow for the generation of synchrophasor data for IEC 61850-90-5. In the first figure, when IEC 61850-90-5 is selected all real and virtual sources are available for the IEC 61850-90-5 PMUs.

The number of PMUs and aggregators vary by product, as outlined in the table.

Table 5-17: PMU implementation by UR device

UR device	Number of PMUS	Number of aggregators	Comment
N60	1, 2, 4, or 6	1 with 1 PMU 2 with 2 or 4 PMUs 4 with 6 PMUs	Number of PMUs is ordered using software options
C60	2	2	
D60, F60, G60, L30, L90, T60	1	1	

The figure shows an example of an N60 using four Logical Device PMUs (Logical Device 2 through 5) and four aggregators. The control blocks for the aggregators are located in LD1. A 64 character LDName setting is provided.

Figure 5-64: N60 example for four logical device PMUs

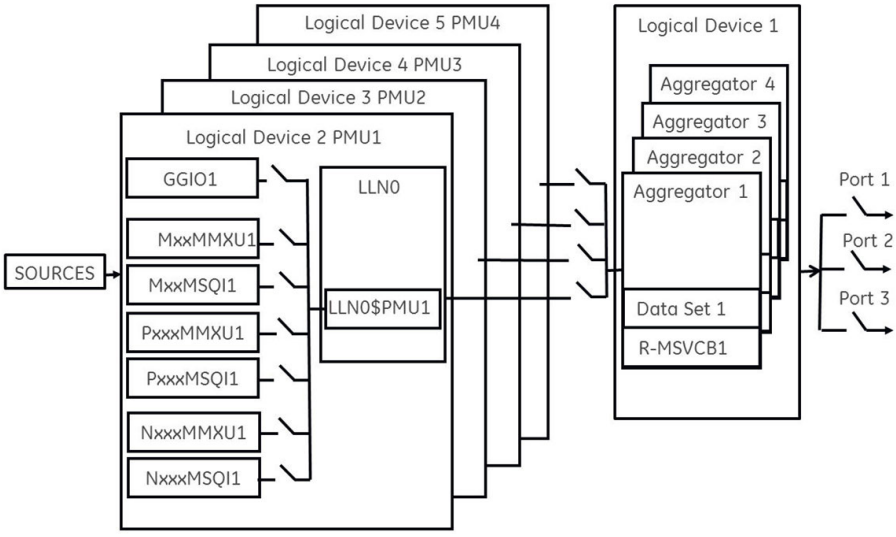

NOTE

Precise time input to the relay from the international time standard, via either IRIG-B or PTP, is vital for correct synchrophasor measurement and reporting. For IRIG-B, a DC level shift IRIG-B receiver must be used for the PMU to output proper synchrophasor values.

Depending on the applied filter, the synchrophasors that are produced by PMUs are classified as either P (protection) or M (Measurement) class synchrophasors. Synchrophasors available within the UR that have no filtering applied are classified as NONE, which within the standard is classified as PRES OR UNKNOWN under the Calculation Method - ClcMth. Each Logical Device PMU supports one MxxMMXU, MxxMSQI, PxxxMMXU , PxxxMSQI, NxxMMXU, and one NxxMSQI logical node.

Figure 5-65: Logical nodes supported in each logical device

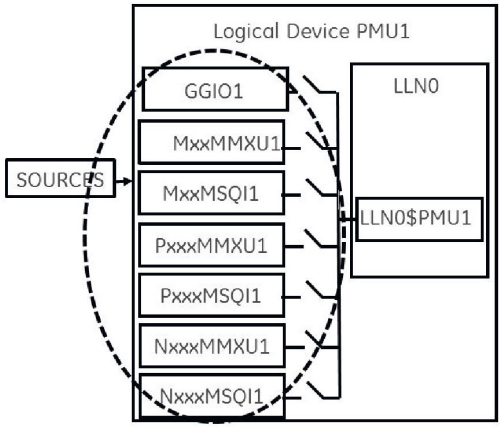

The following is a summary of LNs that are in each Logical Device (LD2 through LD7):

- PxxxMMXU1 ClcMth = P-Class (Note Vaux is mapped to Vneut of MMXU)
- PxxxMSQI1 ClcMth = P-CLASS
- MxxMMXU1 ClcMth = M-Class (Note Vaux is mapped to Vneut of MMXU)
- MxxMSQI1 ClcMth = M-CLASS
- NxxMMXU1 ClcMth = M-Class (Note Vaux is mapped to Vneut of MMXU)
- NxxMSQI1 ClcMth = M-CLASS
- GGIO1, which contains 16 digital status indication points and 16 analog points. The Analog GGIO values are selectable from any FlexAnalog value in the UR.

NOTE

The Synchro Logical Nodes in an LD report at the same rate as set in the PMUn Basic Configuration setting. This is reflected in the instantiation of the Data Object – SmpRate in the msvcb## of LLN0 in the LD1. SmpRate is a Read Only Integer Status (INS).

When the first PMU from any LD is mapped into an aggregator, the aggregator inherits the Sample Rate (SmpRate) and IEEE C37.118 Class (P or M) of that PMU. The value of the SmpRate DO in the Report Control Block is set based on the value of the Sample Rate in the PMU. The Class of the Dataset are mapped into the MSVID of the Dataset (see text that follows for the overall name of the MSVID). If other PMUs are mapped into the same aggregator with different Sample Rates or from different classes, then a Self-Test error (DatSetErr) is set and dataset transmission is blocked.

A setting value — MSVID — is created with a maximum input range of 56 characters (=64 less 6 for the IDCode less 2 for the Class).

The value of MSVID in the dataset is a concatenation of the aggregator IDCode and the MSVID setting value in the format: MSVID-AggregatorIDCode-CLASS where CLASS is P, M, or N (for None) – depending on the Class of the first PMU included in the Aggregator.

NOTE

Synchrophasor Rectangular Format and Integer data types are NOT supported in IEC 61850-90-5 (only supported with IEEE C37.118) and not to set — GGIO1 that contains 16 digital status indication points — aggregated as a 16 bit bitstring and 16 analog points. The Analog GGIO values are selectable from any FlexAnalog value in the UR. For firmware versions 7.0 and later, the description fields for the phasors, analog, and digital channels are populated with the 16 character name field provided within the Basic Configuration menu. Additionally, the names of the 16 binary points are implemented as numbered descriptions — d1, d2, d3, and so on. The number of descriptions are equal to the number of bits configured in the 16 bit digital status word.

All bitstrings less than or equal to 32 bits in length map into a 32 bit bitstring in an IEC 61850-90-5 dataset.

The Value of the Nominal Frequency of the chassis is instantiated as a DO in LPHD of LD1. The value is named HzNom and is an Integer Status (INS).

The UR also supports the option to apply no filtering to the synchrophasors. If no filtering is applied (PMU Class = None), according to the standard, the ClcMth attribute is PRES. The semantic of the ClcMth used is not carried in the individual DO and so it is recommended that one of letters of the prefix on the instantiated LNs be set to "P" or "M" accordingly in order to differentiate. For firmware versions 7.0 and later, only FCDA data is supported. The PMU Implementation by UR Device table earlier indicates the maximum size of each PMU data set for version 7.2 and later using FCDA data (non-structured data).

5.5.7.4 Example: Protection synchrophasors data set with reporting rate 60 frames/second

This example gives the protection synchrophasors data set with a reporting rate of 60 frames per second (P60MMXU1). See the figure earlier, Logical Nodes Supported in Each Logical Device. This data or list of items, as shown in the following figure, is not available to the UR setup program but is available to be mapped by the user into a selected aggregator or aggregators dataset. The logical device name (LDName) of each PMU LD is a 64 character user setting. The IEEE C37.118 STN and IDCode is to be mapped as a concatenated value in the (d)escription field of LPL CDC of the NamPlt DO in LLN0. The mapping is implemented as STN-IDCode (text string).

From each PMU, the user selects the phasor information of interest that is mapped into the selected aggregator datset(s). For version 7.0 and later, only FCDA data is supported.

Figure 5-66: Data set created from user-selected internal items

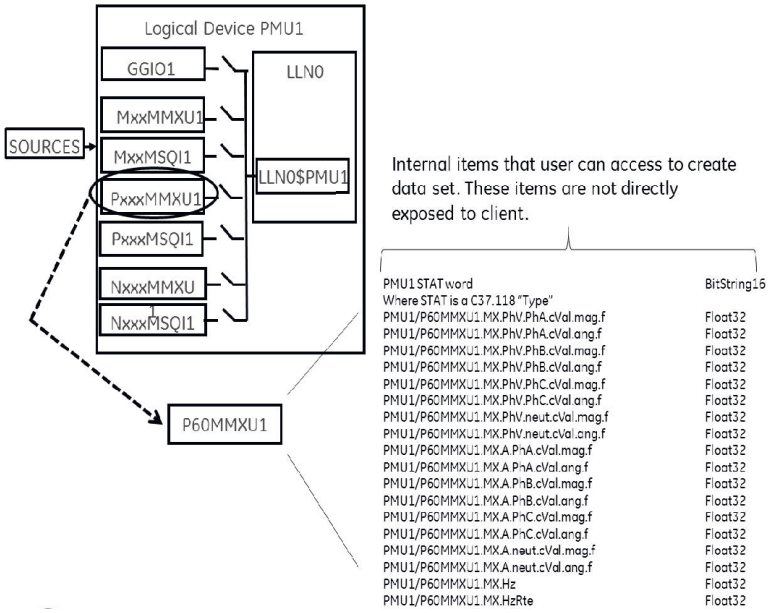

5.5.7.5 Example: Creation of different data sets

The aggregators allow the aggregation of phasors from multiple PMUs (with the same reporting rate) into a single custom data set to optimize bandwidth when streaming.

Figure 5-67: Example of aggregator data sets

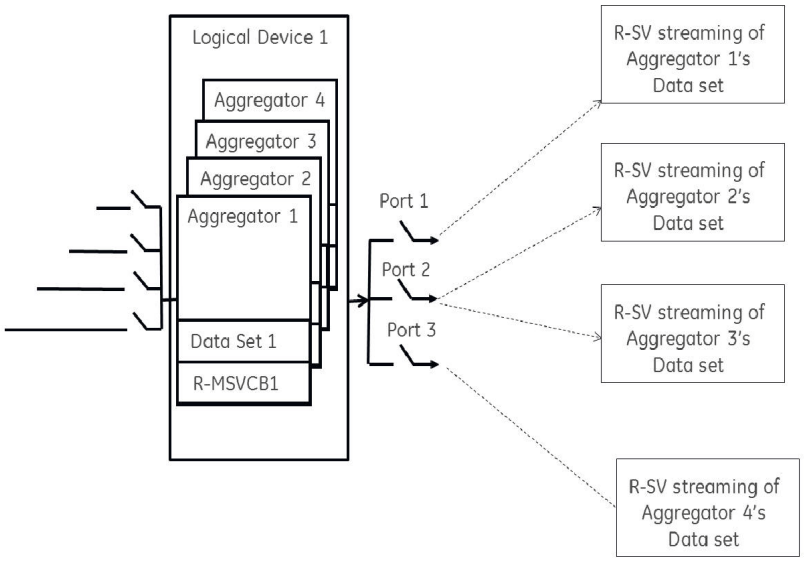

5.5.7.6 Configuration example: CFG-2 based configuration (using IEC 61850-90-5)

The F60 is expected to send the CFG-2 file (IEEE C37.118 config. file) upon request from the upstream synchrophasor devices (for example, P30) without stopping R-SV multicasting, as shown in the following figure. The primary domain controller (PDC) does not need to use a stop/start data stream command if the UR protocol is set to IEC 61850-90-5 prior to requesting the configuration via CFG-2 (IEEE C37.118 config. file). The CFG-2 request from the P30 can be on TCP/IP or UDP/IP, however, R-SV data streaming is only UDP multicasts (not TCP).

Figure 5-68: CFG-2 based configuration solution

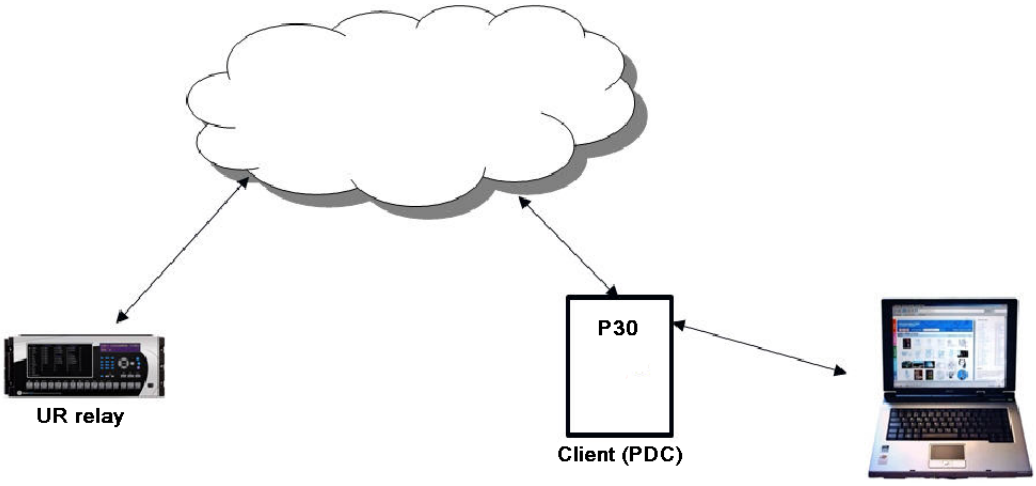

5.5.7.7 Modification of SYNC word in CFG-2 for TR 90-5 data sets

In the CFG-2 file, all relevant information about the data being streamed is included. However, this file does not include the fact that it describes a 90-5 dataset or the number of Application Service Data Units (datasets). In order to communicate this information via the CFG-2 file for a given aggregator, when the aggregator is set to 90-5, the version number of the CFG-2 file (found in bits 0-3 of the frame SYNC word, which is set presently to 2) is set as follows:

Value (decimal)	Number of ASDUs
11	1
12	2
13	3
14	4

5.5.7.8 Settings

The PMU settings are organized as follows.

SETTINGS ⇨⇩ SYSTEM SETUP ⇨⇩ PHASOR MEASUREMENT UNIT ⇨⇩ PHASOR MEASUREMENT UNIT 1

■ PHASOR MEASUREMENT UNIT 1	⇔	■ PMU 1 BASIC CONFIGURATION	See below
	⇩	■ PMU 1 CALIBRATION	See page 5-146
	⇩	■ PMU 1 TRIGGERING	See page 5-147
	⇩	■ PMU 1 RECORDING	See page 5-153

5.5.7.9 Basic configuration

SETTINGS ⇨⇩ SYSTEM SETUP ⇨⇩ PHASOR MEASUREMENT UNIT ⇨⇩ BASIC CONFIGURATION ⇨ PMU 1

■ PMU 1 BASIC CONFIGURATION	⇔	PMU 1 FUNCTION: Disabled	Range: Enabled, Disabled
	⇩	PMU 1 IDCODE: 1	Range: 1 to 65534 in steps of 1
	⇩	PMU 1 STN: GE-UR-PMU	Range: 32-character ASCII string truncated to 16 characters if mapped into C37.118 Default: GE-UR-PMU
	⇩	PMU 1 SIGNAL SOURCE: SRC 1	Range: available signal sources
	⇩	PMU 1 CLASS: CLASS M	Range: None, CLASS M, CLASS P
	⇩	PMU 1 FORMAT: Integer	Range: Integer, Floating-point
	⇩	PMU 1 STYLE: Polar	Range: Polar, Rectangular
	⇩	PMU 1 RATE: 10	Range: 1, 2, 4, 5, 10, 12, 15,20, 25, 30,50, 60, 100, 120 /sec
	⇩	PMU 1 f & df/dt FILTER: None	Range: None, 10Hz/s <10Hz, 10Hz/s <20Hz, 20Hz/s <10Hz, 20Hz/s <20Hz
	⇩	PMU 1 PHS- 1: Off	Range: available synchrophasor values
	⇩		

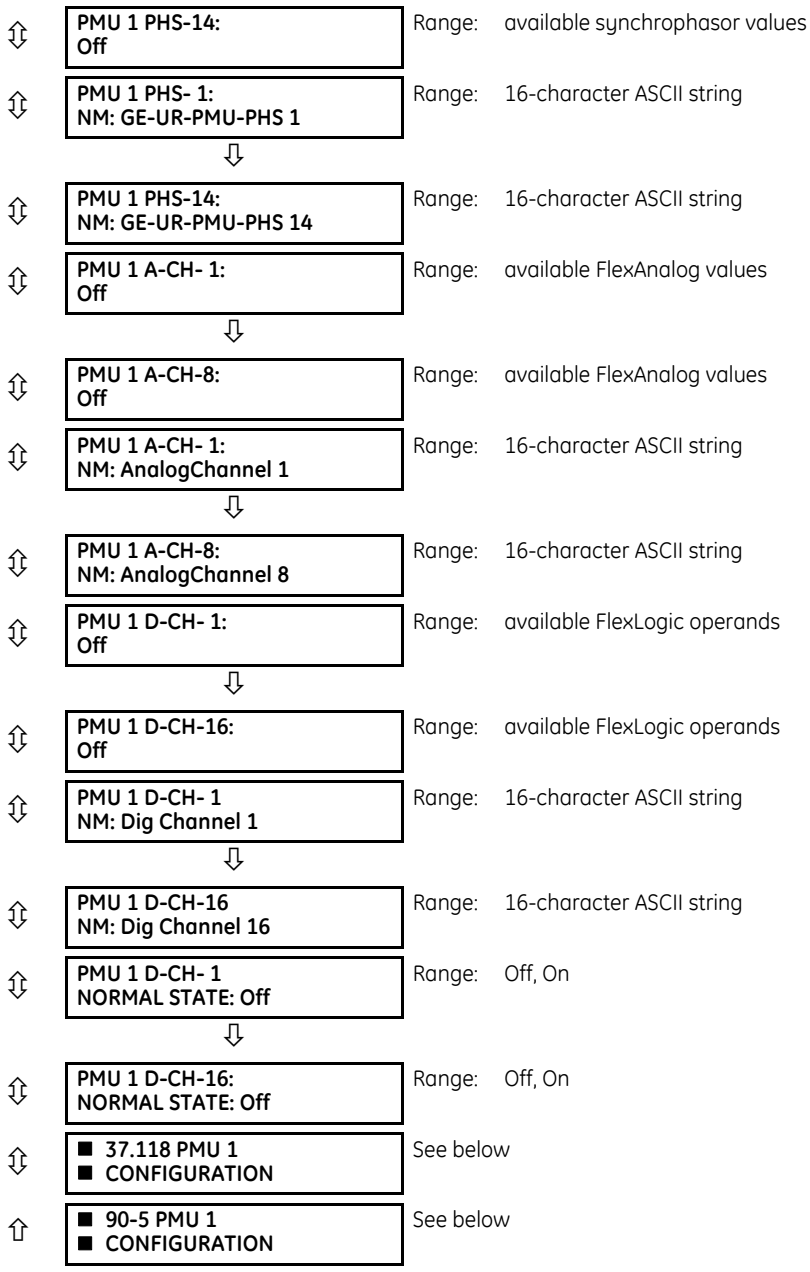

This section contains basic Phasor Measurement Unit (PMU) data, such as functions, source settings, and names.

PMU 1 FUNCTION — This setting enables the LOGICAL Device PMU 1 functionality. Use this setting to permanently enable or disable the feature.

PMU 1 IDCODE — This setting assigns a numerical ID to the PMU. It corresponds to the IDCODE field of the data, configuration, header, and command frames of the IEEE C37.118 protocol. The PMU uses this value when sending data, configuration, and header frames; and it responds to this value when receiving the command frame. This is used when only data from one PMU is present.

PMU 1 STN — This setting assigns an alphanumeric ID to the PMU station. It corresponds to the STN field of the configuration frame of the IEEE C37.118 protocol. This value is a 16-character ASCII string as per the IEEE C37.118 standard.

PMU 1 SIGNAL SOURCE — This setting specifies one of the available F60 signal sources for processing in the PMU. Any combination of voltages and currents can be configured as a source. The current channels can be configured as sums of physically connected currents. This facilitates PMU applications in breaker-and-a-half, ring-bus, and similar arrangements.

The PMU feature calculates voltage phasors for actual voltage (A, B, C, and auxiliary) and current (A, B, C, and ground) channels of the source, as well as symmetrical components (0, 1, and 2) of both voltages and currents. When configuring communication and recording features of the PMU, the user can select, from the above superset, the content to be sent out or recorded. When one source is selected by one PMU, it cannot be selected by another PMU.

PMU 1 CLASS (Range P, M, None) — This setting selects the synchrophasor class. A reporting rate of 100 or 120 can only be selected for class P synchrophasors and if the system frequency is 50 or 60 Hz, respectively.

PMU 1 NETWORK REPORTING FORMAT — This setting selects between reporting synchrophasors as 16-bit integer or 32-bit IEEE floating point numbers. This setting complies with bit-1 of the FORMAT field of the C37.118 configuration frame. Note that this setting applies to synchrophasors only; the user-selectable FlexAnalog channels are always transmitted as 16-bit integer values.

PMU 1 NETWORK REPORTING STYLE — This setting selects between reporting synchrophasors in rectangular (real and imaginary) or in polar (magnitude and angle) coordinates. This setting complies with bit-0 of the FORMAT field of the C37.118 configuration frame.

PMU 1 RATE — This setting specifies the reporting rate for the network (Ethernet) port. This value applies to all PMU streams of the device that are assigned to transmit over this aggregator. For a system frequency of 60 Hz (50 Hz), the F60 generates a reporting mismatch message if the selected rate is not set as 10 Hz, 12 Hz, 15 Hz, 20 Hz, 30 Hz, 60 Hz, or 120 Hz (or 10 Hz, 25 Hz, 50 Hz, or 100 Hz when the system frequency is 50 Hz) when entered via the keypad or software; and the F60 stops the transmission of reports. Note that 4 Hz is not allowed for an M-class 50 Hz system.

PMU 1 f & df/dt FILTER — This setting is present but not supported in versions 7.31 and below. The setting is present and supported since version 7.32.

This setting allows applying post-filtering to the frequency and rate-of-change of-frequency to avoid reporting erroneous values, which can possibly happen during fault, switching, and other system disturbances. For example, choosing 20Hz/s <10Hz setting ensures that if rate-of-change of-frequency between current reporting instance and previous one exceeds 20Hz/s or frequency deviation from the nominal frequency exceeds 10Hz, then new frequency and rate-of-change of-frequency value are invalidated. If this happens, the previous valid value of the frequency is maintained and rate-of-change of-frequency value is forced to 0 at this reporting instance.

PMU 1 PHS-1 to **PMU 1 PHS-14** — These settings specify synchrophasors to be transmitted from the superset of all synchronized measurements. The table outlines available synchrophasor values.

Table 5-18: Synchrophaser settings

Selection	Meaning
Va	First voltage channel, either Va or Vab
Vb	Second voltage channel, either Vb or Vbc
Vc	Third voltage channel, either Vc or Vca
Vx	Fourth voltage channel
Ia	Phase A current, physical channel or summation as per the source settings
Ib	Phase B current, physical channel or summation as per the source settings
Ic	Phase C current, physical channel or summation as per the source settings
Ig	Fourth current channel, physical or summation as per the source settings
V1	Positive-sequence voltage, referenced to Va
V2	Negative-sequence voltage, referenced to Va
V0	Zero-sequence voltage
I1	Positive-sequence current, referenced to Ia
I2	Negative-sequence current, referenced to Ia
I0	Zero-sequence current

These settings allow for optimizing the frame size and maximizing transmission channel usage, depending on a given application. Select "Off" to suppress transmission of a given value.

PMU 1 PHS-1 NM to **PMU 1 PHS-14 NM** — These settings allow for custom naming of the synchrophasor channels. Sixteen-character ASCII strings are allowed as in the CHNAM field of the configuration frame. These names are typically based on station, bus, or breaker names.

PMU 1 A-CH-1 to **PMU 1 A-CH-16** — These settings specify any analog data measured by the relay to be included as a user-selectable analog channel of the data frame. Up to eight analog channels can be configured to send any FlexAnalog value from the relay. Examples include frequency, rate of frequency change, active and reactive power, per phase or three-phase power, power factor, temperature via RTD inputs, and THD. The configured analog values are sampled concurrently with the synchrophasor instant and sent as 32-bit floating-point values scaled to Engineering units.

PMU 1 A-CH-1 NM to **PMU 1 A-CH-16 NM** — These settings allow for custom naming of the analog channels. Sixteen-character ASCII strings are allowed as in the CHNAM field of the configuration frame.

PMU 1 D-CH-1 to **PMU 1 D-CH-16** — These settings specify any digital flag measured by the relay to be included as a user-selectable digital channel of the data frame. Up to 16 digital channels can be configured to send any FlexLogic operand from the relay. The configured digital flags are sampled concurrently with the synchrophasor instant. These values are mapped into a two-byte integer number, with byte 1 LSB corresponding to the digital channel 1 and byte 2 MSB corresponding to digital channel 16.

PMU 1 D-CH-1 NM to **PMU 1 D-CH-16 NM** — These settings allow for custom naming of the digital channels. Sixteen-character ASCII strings are allowed as in the CHNAM field of the configuration frame.

PMU 1 D-CH-1 NORMAL STATE to **PMU 1 D-CH-16 NORMAL STATE** — These settings allow for specifying a normal state for each digital channel. These states are transmitted in configuration frames to the data concentrator.

C37.118 PMU 1 configuration

SETTINGS ⇨⇩ SYSTEM SETUP ⇨⇩ PHASOR MEASUREMENT UNIT ⇨⇩ BASIC CONFIGURATION ⇨ PMU 1 ⇨ PMU 1 BASIC CONFIGURATION ⇨⇩ 37.118 PMU 1 CONFIGURATION

■ 37.118 PMU 1 ■ CONFIGURATION	⇔	**PMU 1 FORMAT:** **Integer**	Range: Integer, Floating-point
	⇧	**PMU 1 STYLE:** **Polar**	Range: Polar, Rectangular

PMU 1 FORMAT — This setting selects whether synchrophasors are reported as 16-bit integers or 32-bit IEEE floating point numbers. This setting complies with bit-1 of the FORMAT field of the IEEE C37.118 configuration frame. This setting applies to synchrophasors only; user-selectable FlexAnalog channels are always transmitted as 16-bit integer values.

PMU 1 STYLE — This setting selects whether synchrophasors are reported in rectangular (real and imaginary) coordinates or in polar (magnitude and angle) coordinates. This setting complies with bit-0 of the FORMAT field of the IEEE C37.118 configuration frame.

NOTE

With 90-5 PMU, the FORMAT and STYLE are Floating-point and Polar respectively, as specified in the IEC 61850-90-5 technical report.

IEC 61850–90–5 PMU 1 configuration

SETTINGS ⇨⇩ SYSTEM SETUP ⇨⇩ PHASOR MEASUREMENT UNIT ⇨⇩ BASIC CONFIGURATION ⇨ PMU 1 ⇨ PMU 1 BASIC CONFIGURATION ⇨⇩ 90-5 PMU 1 CONFIGURATION

■ 90-5 PMU 1 ■ CONFIGURATION	⇔	**PMU 1 LDINST:** **PMU1**	Range: 64 char ASCII text

PMU1 LDINST — A user-defined visible string (maximum 64 char ASCII test) to assign Logical Device (LD) Inst for a PMU logical device.

NOTE

As per IEC 61850-6 standard specification, the PMU LD Name is the concatenated combination (to total 64 characters) of IED Name (specified in IEC 61850 Server Settings) appended with PMU X LDINST string.

5.5.7.10 PMU calibration

SETTINGS ⇨⇩ SYSTEM SETUP ⇨⇩ PHASOR MEASUREMENT UNIT ⇨⇩ PHASOR MEASUREMENT UNIT 1 ⇨⇩ PMU 1 CALIBRATION

■ PMU 1 ■ CALIBRATION	⇔	**PMU 1 VA CALIBRATION ANGLE: 0.00°**	Range: –5.00 to 5.00° in steps of 0.05
	⇕	**PMU 1 VA CALIBRATION MAG: 100.0%**	Range: 95.0 to 105.0 in steps of 0.1%
	⇕	**PMU 1 VB CALIBRATION ANGLE: 0.00°**	Range: –5.00 to 5.00° in steps of 0.05
	⇕	**PMU 1 VB CALIBRATION MAG: 100.0%**	Range: 95.0 to 105.0 in steps of 0.1%
	⇕	**PMU 1 VC CALIBRATION ANGLE: 0.00°**	Range: –5.00 to 5.00° in steps of 0.05
	⇕	**PMU 1 VC CALIBRATION MAG: 100.0%**	Range: 95.0 to 105.0 in steps of 0.1%
	⇕	**PMU 1 VX CALIBRATION ANGLE: 0.00°**	Range: –5.00 to 5.00° in steps of 0.05
	⇕	**PMU 1 VX CALIBRATION MAG: 100.0%**	Range: 95.0 to 105.0 in steps of 0.1%
	⇕	**PMU 1 IA CALIBRATION ANGLE: 0.00°**	Range: –5.00 to 5.00° in steps of 0.05
	⇕	**PMU 1 IA CALIBRATION MAG: 100.0%**	Range: 95.0 to 105.0 in steps of 0.1%
	⇕	**PMU 1 IB CALIBRATION ANGLE: 0.00°**	Range: –5.00 to 5.00° in steps of 0.05
	⇕	**PMU 1 IB CALIBRATION MAG: 100.0%**	Range: 95.0 to 105.0 in steps of 0.1%
	⇕	**PMU 1 IC CALIBRATION ANGLE: 0.00°**	Range: –5.00 to 5.00° in steps of 0.05
	⇕	**PMU 1 IC CALIBRATION MAG: 100.0%**	Range: 95.0 to 105.0 in steps of 0.1%
	⇕	**PMU 1 IG CALIBRATION ANGLE: 0.00°**	Range: –5.00 to 5.00° in steps of 0.05
	⇕	**PMU 1 IG CALIBRATION MAG: 100.0%**	Range: 95.0 to 105.0 in steps of 0.1%
	⇕	**PMU 1 SEQ VOLT SHIFT ANGLE: 0°**	Range: –180 to 180° in steps of 30
	⇧	**PMU 1 SEQ CURR SHIFT ANGLE: 0°**	Range: –180 to 180° in steps of 30

This menu contains user angle and magnitude calibration data for the Phasor Measurement Unit (PMU). This data is combined with the factory adjustments to shift the phasors for better accuracy.

PMU 1 VA... IG CALIBRATION ANGLE — These settings recognize applications with protection class voltage and current sources, and they allow the user to calibrate each channel (four voltages and four currents) individually to offset errors introduced by VTs, CTs, and cabling. The setting values are effectively added to the measured angles. Therefore, enter a positive correction when the secondary signal lags the true signal and a negative value when the secondary signal leads the true signal.

PMU 1 VA... IG CALIBRATION MAGNITUDE — These settings recognize applications with protection class voltage and current sources, and they allow the user to calibrate each channel (four voltages and four currents) individually to offset errors introduced by VTs, CTs. The setting values are effectively a multiplier of the measured magnitudes. Therefore, entering a multiplier greater than 100% of the secondary signal increases the true signal, and a multiplier less than 100% value of the secondary signal reduces the true signal.

PMU 1 SEQ VOLT SHIFT ANGLE — This setting allows correcting positive- and negative-sequence voltages for vector groups of power transformers located between the PMU voltage point and the reference node. This angle is effectively added to the positive-sequence voltage angle and subtracted from the negative-sequence voltage angle. Note that:

- When this setting is not "0°", the phase and sequence voltages do not agree. Unlike sequence voltages, the phase voltages cannot be corrected in a general case and therefore are reported as measured.
- When receiving synchrophasor data at multiple locations, with possibly different reference nodes, it can be more beneficial to allow the central locations to perform the compensation of sequence voltages.
- This setting applies to PMU data only. The F60 calculates symmetrical voltages independently for protection and control purposes without applying this correction.
- When connected to line-to-line voltages, the PMU calculates symmetrical voltages with the reference to the AG voltage and not to the physically connected AB voltage (see the Metering Conventions section in Chapter 6).

PMU 1 SEQ CURR SHIFT ANGLE — This setting allows correcting positive and negative-sequence currents for vector groups of power transformers located between the PMU current point and the reference node. The setting has the same meaning for currents as the **PMU 1 SEQ VOLT SHIFT ANGLE** setting has for voltages. Normally, the two correcting angles are set identically, except rare applications when the voltage and current measuring points are located at different windings of a power transformer.

5.5.7.11 PMU triggering overview

SETTINGS ⇨⇩ SYSTEM SETUP ⇨⇩ PHASOR MEASUREMENT UNIT ⇨⇩ PHASOR MEASUREMENT UNIT 1 ⇨⇩ PMU 1 TRIGGERING

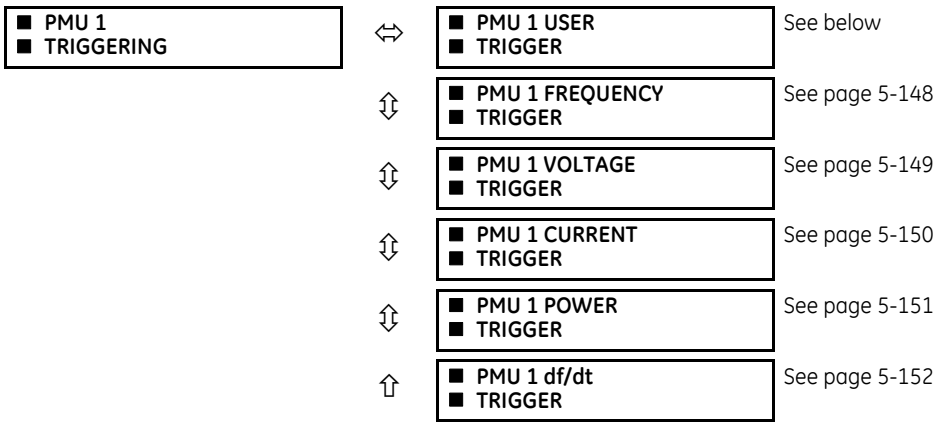

Each Phasor Measurement Unit (PMU) contains five triggering mechanisms to facilitate triggering of the associated PMU recorder, or cross-triggering of other PMUs in the system. They are:

- Overfrequency and underfrequency
- Overvoltage and undervoltage
- Overcurrent
- Overpower
- High rate of change of frequency

The pre-configured triggers can be augmented with a user-specified condition built freely using programmable logic of the relay. The entire triggering logic is refreshed once every two power system cycles.

All five triggering functions and the user-definable condition are consolidated (ORed) and connected to the PMU recorder. Each trigger can be programmed to log its operation into the event recorder and to signal its operation via targets. The five triggers drive the STAT bits of the data frame to inform the destination of the synchrophasor data regarding the cause of trigger. The following convention is adopted to drive bits 11, 3, 2, 1, and 0 of the STAT word.

Figure 5-69: STAT bits logic

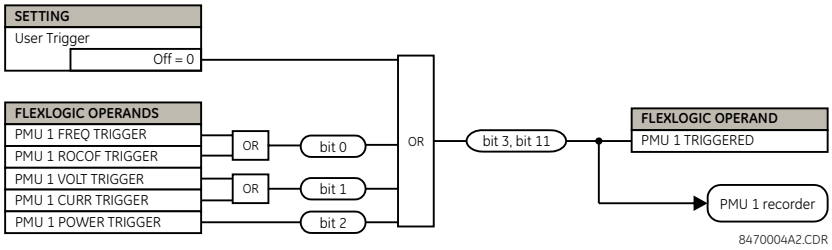

The trigger reset (drop-off) timer is available for all five triggering functions (FREQ, ROCOF, VOLT, CURR, POWER) in individual trigger settings under the **TRIGGER DPO TIME** setting. This asserts individual trigger operand and overall PMU x TRIGGERED operand with stat bits 3 and 11 for a fixed interval defined by this setting. If it is required that PMU x TRIGGERED operand with stat bits 3 and 11 stay longer than the individual reset timer, then use the **PMU x USER TRIGGER** setting assigned with appropriate elements and FlexLogic. In short, in case of **USER TRIGGER**, the drop-off time needs to be implemented using FlexLogic.

5.5.7.12 User triggering

SETTINGS ⇨⇩ SYSTEM SETUP ⇨⇩ PHASOR MEASUREMENT UNIT ⇨⇩ PHASOR MEASUREMENT UNIT 1 ⇨⇩ PMU 1 TRIGGERING ⇨⇩ PMU 1 USER TRIGGER

■ PMU 1 USER ■ TRIGGER	⇔	**PMU 1 USER TRIGGER:** **Off**	Range: FlexLogic operand

The user trigger allows customized triggering logic to be constructed from FlexLogic. The entire triggering logic is refreshed every two power system cycles.

5.5.7.13 Frequency triggering

SETTINGS ⇨⇩ SYSTEM SETUP ⇨⇩ PHASOR MEASUREMENT UNIT ⇨⇩ PHASOR MEASUREMENT UNIT 1 ⇨⇩ PMU 1 TRIGGERING ⇨⇩ PMU 1 FREQUENCY TRIGGER

■ PMU 1 FREQUENCY ■ TRIGGER	⇔	**PMU 1 FREQ TRIGGER** **FUNCTION: Disabled**	Range: Enabled, Disabled
	⇩	**PMU 1 FREQ TRIGGER** **LOW-FREQ: 49.00 Hz**	Range: 20.00 to 70.00 Hz in steps of 0.01
	⇩	**PMU 1 FREQ TRIGGER** **HIGH-FREQ: 61.00 Hz**	Range: 20.00 to 70.00 Hz in steps of 0.01
	⇩	**PMU 1 FREQ TRIGGER** **PKP TIME: 0.10 s**	Range: 0.00 to 600.00 s in steps of 0.01
	⇩	**PMU 1 FREQ TRIGGER** **DPO TIME: 1.00 s**	Range: 0.00 to 600.00 s in steps of 0.01
	⇩	**PMU 1 FREQ TRIG BLK:** **Off**	Range: FlexLogic operand
	⇩	**PMU 1 FREQ TRIGGER** **TARGET: Self-Reset**	Range: Self-Reset, Latched, Disabled
	⇩	**PMU 1 FREQ TRIGGER** **EVENTS: Disabled**	Range: Enabled, Disabled

The trigger responds to the frequency signal of the Phasor Measurement Unit (PMU) source. The frequency is calculated from among phase voltages, auxiliary voltage, phase currents, and ground current, in this hierarchy, depending on the source configuration as per F60 standards. This element requires that the frequency be above the minimum measurable value. If the frequency is below this value, such as when the circuit is de-energized, the trigger drops out.

PMU 1 FREQ TRIGGER LOW-FREQ — Specifies the low threshold for the abnormal frequency trigger. The comparator applies a 0.02 Hz hysteresis.

PMU 1 FREQ TRIGGER HIGH-FREQ — Specifies the high threshold for the abnormal frequency trigger. The comparator applies a 0.02 Hz hysteresis.

PMU 1 FREQ TRIGGER PKP TIME — Use to filter out spurious conditions and avoid unnecessary triggering of the recorder.

PMU 1 FREQ TRIGGER DPO TIME — Use to extend the trigger after the situation returns to normal. This setting is of importance when using the recorder in the forced mode (recording as long as the triggering condition is asserted).

Figure 5-70: Frequency trigger logic

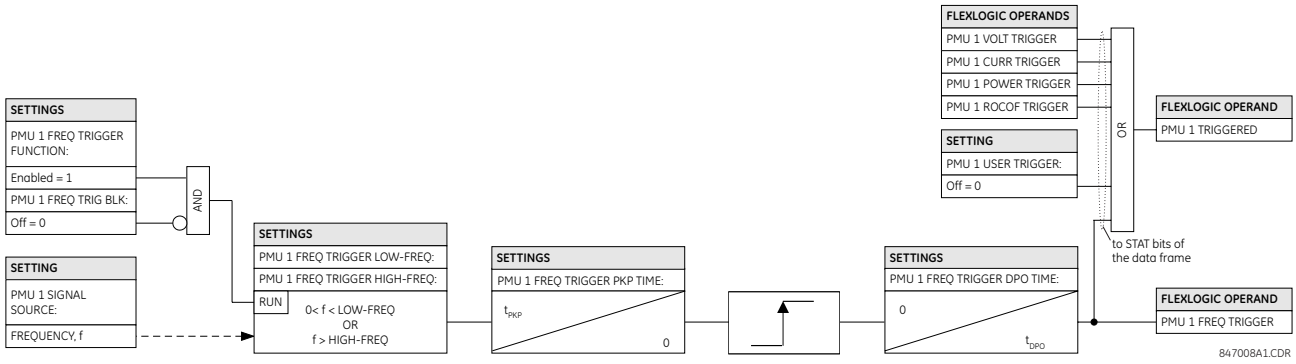

5.5.7.14 Voltage triggering

SETTINGS ⇨⇩ SYSTEM SETUP ⇨⇩ PHASOR MEASUREMENT UNIT ⇨⇩ PHASOR MEASUREMENT UNIT 1 ⇨⇩ PMU 1 TRIGGERING ⇨⇩ PMU 1 VOLTAGE TRIGGER

■ PMU 1 VOLTAGE ■ TRIGGER	⇔	**PMU 1 VOLT TRIGGER FUNCTION: Disabled**	Range: Enabled, Disabled
	⇩	**PMU 1 VOLT TRIGGER LOW-VOLT: 0.800 pu**	Range: 0.250 to 1.250 pu in steps of 0.001
	⇩	**PMU 1 VOLT TRIGGER HIGH-VOLT: 1.200 pu**	Range: 0.750 to 1.750 pu in steps of 0.001
	⇩	**PMU 1 VOLT TRIGGER PKP TIME: 0.10 s**	Range: 0.00 to 600.00 s in steps of 0.01
	⇩	**PMU 1 VOLT TRIGGER DPO TIME: 1.00 s**	Range: 0.00 to 600.00 s in steps of 0.01
	⇩	**PMU 1 VOLT TRIG BLK: Off**	Range: FlexLogic operand
	⇩	**PMU 1 VOLT TRIGGER TARGET: Self-Reset**	Range: Self-Reset, Latched, Disabled
	⇩	**PMU 1 VOLT TRIGGER EVENTS: Disabled**	Range: Enabled, Disabled

This element responds to abnormal voltage. Separate thresholds are provided for low and high voltage. In terms of signaling its operation, the element does not differentiate between the undervoltage and overvoltage events. The trigger responds to the phase voltage signal of the Phasor Measurement Unit (PMU) source. All voltage channels (A, B, and C or AB, BC, and CA) are processed independently and can trigger the recorder. A minimum voltage supervision of 0.1 pu is implemented to prevent pickup on a de-energized circuit, similarly to the undervoltage protection element.

PMU 1 VOLT TRIGGER LOW-VOLT — Specifies the low threshold for the abnormal voltage trigger, in per-unit of the PMU source. 1 pu is a nominal voltage value defined as the nominal secondary voltage times VT ratio. The comparator applies a 1% hysteresis.

PMU 1 VOLT TRIGGER HIGH-VOLT — Specifies the high threshold for the abnormal voltage trigger, in per-unit of the PMU source. 1 pu is a nominal voltage value defined as the nominal secondary voltage times VT ratio. The comparator applies a 1% hysteresis.

PMU 1 VOLT TRIGGER PKP TIME — Use to filter out spurious conditions and avoid unnecessary triggering of the recorder.

PMU 1 VOLT TRIGGER DPO TIME — Use to extend the trigger after the situation returns to normal. This setting is of importance when using the recorder in the forced mode (recording as long as the triggering condition is asserted).

Figure 5-71: Voltage trigger logic

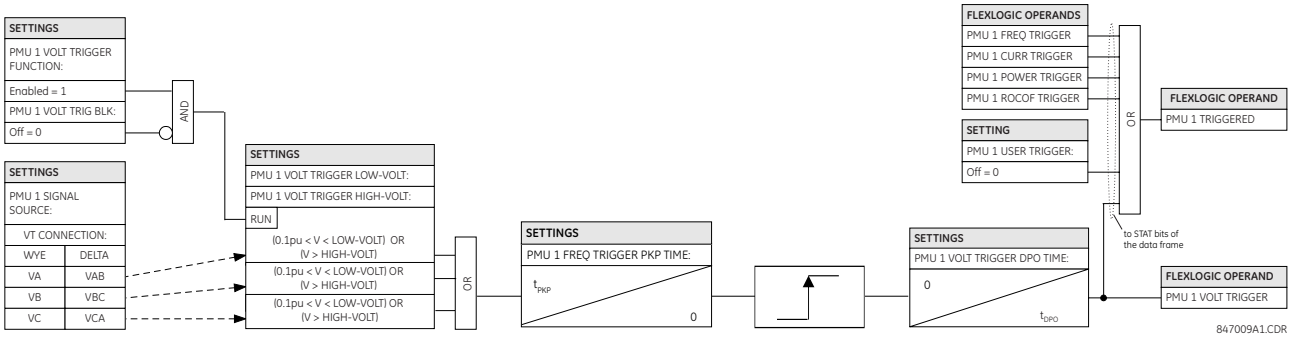

5.5.7.15 Current triggering

SETTINGS ⇨⇩ SYSTEM SETUP ⇨⇩ PHASOR MEASUREMENT UNIT ⇨⇩ PHASOR MEASUREMENT UNIT 1 ⇨⇩ PMU 1 TRIGGERING ⇨⇩ PMU 1 CURRENT TRIGGER

■ PMU 1 CURRENT ■ TRIGGER	⇔	**PMU 1 CURR TRIGGER FUNCTION: Disabled**	Range: Enabled, Disabled
	⇩	**PMU 1 CURR TRIGGER PICKUP: 1.800 pu**	Range: 0.100 to 30.000 pu in steps of 0.001
	⇩	**PMU 1 CURR TRIGGER PKP TIME: 0.10 s**	Range: 0.00 to 600.00 s in steps of 0.01
	⇩	**PMU 1 CURR TRIGGER DPO TIME: 1.00 s**	Range: 0.00 to 600.00 s in steps of 0.01
	⇩	**PMU 1 CURR TRIG BLK: Off**	Range: FlexLogic operand
	⇩	**PMU 1 CURR TRIGGER TARGET: Self-Reset**	Range: Self-Reset, Latched, Disabled
	⇩	**PMU 1 CURR TRIGGER EVENTS: Disabled**	Range: Enabled, Disabled

This element responds to elevated current. The trigger responds to the phase current signal of the Phasor Measurement Unit (PMU) source. All current channel (A, B, and C) are processed independently and can trigger the recorder.

PMU 1 CURR TRIGGER PICKUP — Specifies the pickup threshold for the overcurrent trigger, in per unit of the PMU source. A value of 1 pu is a nominal primary current. The comparator applies a 3% hysteresis.

PMU 1 CURR TRIGGER PKP TIME — Use to filter out spurious conditions and avoid unnecessary triggering of the recorder.

PMU 1 CURR TRIGGER DPO TIME — Use to extend the trigger after the situation returns to normal. This setting is of importance when using the recorder in the forced mode (recording as long as the triggering condition is asserted).

Figure 5-72: Current trigger logic

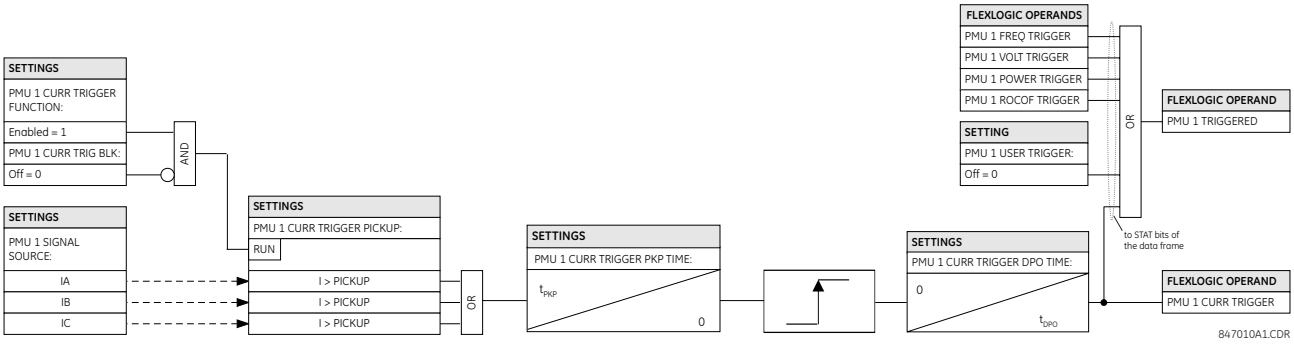

5.5.7.16 Power triggering

SETTINGS ⇨⇩ SYSTEM SETUP ⇨⇩ PHASOR MEASUREMENT UNIT ⇨⇩ PHASOR MEASUREMENT UNIT 1 ⇨⇩ PMU 1 TRIGGERING ⇨⇩ PMU 1 POWER TRIGGER

■ PMU 1 POWER TRIGGER	⇔	**PMU 1 POWER TRIGGER FUNCTION: Disabled**	Range: Enabled, Disabled
	⇩	**PMU 1 POWER TRIGGER ACTIVE: 1.250 pu**	Range: 0.250 to 3.000 pu in steps of 0.001
	⇩	**PMU 1 POWER TRIGGER REACTIVE: 1.250 pu**	Range: 0.250 to 3.000 pu in steps of 0.001
	⇩	**PMU 1 POWER TRIGGER APPARENT: 1.250 pu**	Range: 0.250 to 3.000 pu in steps of 0.001
	⇩	**PMU 1 POWER TRIGGER PKP TIME: 0.10 s**	Range: 0.00 to 600.00 s in steps of 0.01
	⇩	**PMU 1 POWER TRIGGER DPO TIME: 1.00 s**	Range: 0.00 to 600.00 s in steps of 0.01
	⇩	**PMU 1 PWR TRIG BLK: Off**	Range: FlexLogic operand
	⇩	**PMU 1 POWER TRIGGER TARGET: Self-reset**	Range: Self-reset, Latched, Disabled
	⇧	**PMU 1 POWER TRIGGER EVENTS: Disabled**	Range: Enabled, Disabled

This element responds to abnormal power. Separate thresholds are provided for active, reactive, and apparent powers. In terms of signaling its operation, the element does not differentiate among the three types of power. The trigger responds to the single-phase and three-phase power signals of the Phasor Measurement Unit (PMU) source.

PMU 1 POWER TRIGGER ACTIVE — Specifies the pickup threshold for the active power of the source. For single-phase power, 1 pu is a product of 1 pu voltage and 1 pu current, or the product of nominal secondary voltage, the VT ratio and the nominal primary current. For the three-phase power, 1 pu is three times that for a single-phase power. The comparator applies a 3% hysteresis.

PMU 1 POWER TRIGGER REACTIVE — Specifies the pickup threshold for the reactive power of the source. For single-phase power, 1 pu is a product of 1 pu voltage and 1 pu current, or the product of nominal secondary voltage, the VT ratio and the nominal primary current. For the three-phase power, 1 pu is three times that for a single-phase power. The comparator applies a 3% hysteresis.

PMU 1 POWER TRIGGER APPARENT — Specifies the pickup threshold for the apparent power of the source. For single-phase power, 1 pu is a product of 1 pu voltage and 1 pu current, or the product of nominal secondary voltage, the VT ratio and the nominal primary current. For the three-phase power, 1 pu is three times that for a single-phase power. The comparator applies a 3% hysteresis.

PMU 1 POWER TRIGGER PKP TIME — Use to filter out spurious conditions and avoid unnecessary triggering of the recorder.

PMU 1 POWER TRIGGER DPO TIME — Use to extend the trigger after the situation returns to normal. This setting is of particular importance when using the recorder in the forced mode (recording as long as the triggering condition is asserted).

Figure 5-73: Power trigger logic

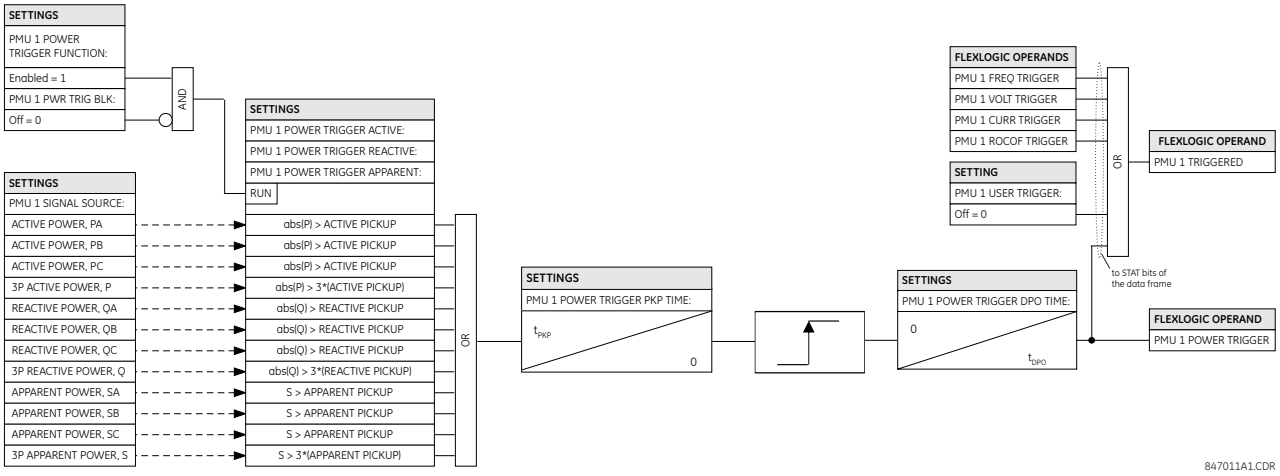

5.5.7.17 df/dt triggering

SETTINGS ⇨⇩ SYSTEM SETUP ⇨⇩ PHASOR MEASUREMENT UNIT ⇨⇩ PHASOR MEASUREMENT UNIT 1 ⇨⇩ PMU 1 TRIGGERING ⇨⇩ PMU 1 df/dt TRIGGER

■ PMU 1 df/dt ■ TRIGGER	⇔	**PMU 1 df/dt TRIGGER FUNCTION: Disabled** — Range: Enabled, Disabled
	⇩	**PMU 1 df/dt TRIGGER RAISE: 0.25 Hz/s** — Range: 0.10 to 15.00 Hz/s in steps of 0.01
	⇩	**PMU 1 df/dt TRIGGER FALL: 0.25 Hz/s** — Range: 0.10 to 15.00 Hz/s in steps of 0.01
	⇩	**PMU 1 df/dt TRIGGER PKP TIME: 0.10 s** — Range: 0.00 to 600.00 s in steps of 0.01
	⇩	**PMU 1 df/dt TRIGGER DPO TIME: 1.00 s** — Range: 0.00 to 600.00 s in steps of 0.01
	⇩	**PMU 1 df/dt TRG BLK: Off** — Range: FlexLogic operand
	⇩	**PMU 1 df/dt TRIGGER TARGET: Self-reset** — Range: Self-reset, Latched, Disabled
	⇩	**PMU 1 df/dt TRIGGER EVENTS: Disabled** — Range: Enabled, Disabled

This element responds to frequency rate of change. Separate thresholds are provided for rising and dropping frequency. The trigger responds to the rate of change of frequency (df/dt) of the Phasor Measurement Unit (PMU) source.

PMU 1 df/dt TRIGGER RAISE — Specifies the pickup threshold for the rate of change of frequency in the raising direction (positive df/dt). The comparator applies a 4% hysteresis.

PMU 1 df/dt TRIGGER FALL — Specifies the pickup threshold for the rate of change of frequency in the falling direction (negative df/dt). The comparator applies a 4% hysteresis.

PMU 1 df/dt TRIGGER PKP TIME — Use to filter out spurious conditions and avoid unnecessary triggering of the recorder.

PMU 1 df/dt TRIGGER DPO TIME — Use to extend the trigger after the situation returns to normal. This setting is of importance when using the recorder in the forced mode (recording as long as the triggering condition is asserted).

Figure 5-74: Rate of change of frequency trigger logic

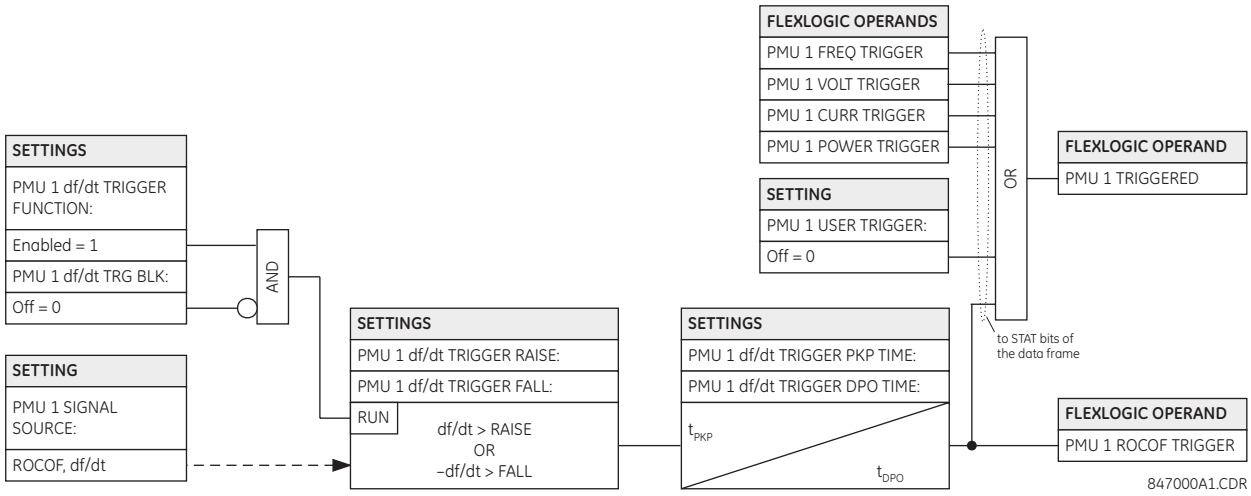

5.5.7.18 PMU recording

SETTINGS ⇨⇩ SYSTEM SETUP ⇨⇩ PHASOR MEASUREMENT UNIT ⇨⇩ PHASOR MEASUREMENT UNIT 1 ⇨⇩ RECORDING PMU 1

■ PMU 1 ■ RECORDING	⇔	PMU 1 FUNCTION: DISABLE	Range: Enabled, Disabled
	⇳	PMU 1 NO OF TIMED RECORDS: 10	Range: 2 to 128 in steps of 1
	⇳	PMU 1 TRIGGER MODE: AUTOMATIC OVERWRITE	Range: Automatic Overwrite, Protected
	⇧	PMU 1 TIMED TRIGGER POSITION: 10%	Range: 1 to 50% in steps of 1

The length of the PMU record is variable and depends on some settings and configuration, such as **PMU 1 NO OF TIMED RECORDS**, **PMU 1 RATE**, number of Synchrophasors, Analogs and Digitals configured in each PMU. There is a fixed amount of data storage for PMU recording; the more records captured, the less the recording length captured per record. See the **ACTUAL VALUES ⇨ RECORDS ⇨⇩ PMU RECORDS ⇨ PMU 1 RECORDING** menu to view the actual PMU record length captured per record. The following table provides sample configurations with corresponding seconds per record. The minimum number of PMU records is two. The third to fifth columns is the number of configured values recorded in each record.

Table 5-19: PMU record length example

Records	Frames per second	Synchrophasors	Analogs	Digitals	Record length (seconds)
3	30	14	8	16	590.4
16	30	14	8	16	138.9
32	30	14	8	16	71.5
64	30	14	8	16	36.3
3	60	14	8	16	295.2
16	60	14	8	16	69.4
32	60	14	8	16	35.7
64	60	14	8	16	18.1

PMU 1 FUNCTION — This setting enables or disables the recorder for PMU 1. The rate is fixed at the reporting rate set within the aggregator (that is, Aggregator 1).

PMU 1 NO OF TIMED RECORDS — Specifies the number of timed records that are available for a given logical PMU 1. The length of each record is equal to the available memory divided by the content size and number of records. As the number of records is increased, the available storage for each record is reduced. The relay supports a maximum of 128 records in either timed or forced mode.

PMU 1 TRIGGER MODE — Specifies what happens when the recorder uses its entire available memory storage. With "Automatic Overwrite," the last record is erased to facilitate new recording, when triggered. Under the "Protected" selection, the recorder stops creating new records when the entire memory is used up by the old uncleared records.

PMU 1 TIMED TRIGGER POSITION — Specifies the amount of pre-trigger data as a percent of the entire record. This setting applies only to the timed mode of recording.

5.5.7.19 Aggregator

SETTINGS ⇨⇩ SYSTEM SETUP ⇨⇩ PHASOR MEASUREMENT UNIT ⇨⇩ PMU AGGREGATOR 1

■ PMU AGGREGATOR 1 ■	⇔	PMU AGGREGATOR 1 PROTOCOL: NONE — Range: NONE, 37.118, 90-5
	⇩	PMU AGGREGATOR 1: IDCODE: 1 — Range: 1 to 65534 in steps of 1
	⇩	PMU AGGREGATOR 1 INCLUDE PMU1: No — Range: No, Yes
	⇩	■ 37.118 AGGR 1 ■ CONFIGURATION — See below
	⇧	■ 90-5 AGGR 1 ■ CONFIGURATION — See below

NOTE

When the protocol selection is set via the software or keypad, all aggregators whose protocol is not set to None are set to the last protocol saved (that is, IEEE C37.118 or IEC 61850-90-5) to any aggregators, as both IEEE C37.118 and IEC 61850-90-5 simultaneous streaming is not possible.

PMU AGGREGATOR1 PROTOCOL — Selects if the IEEE C37.118 or IEC 61850-90-5 technical report is used. Because one protocol is supported at a time in a device, this setting applies to all PMU aggregators.

PMU AGGREGATOR1 IDCODE — Numeric identifier of the Aggregator / PDC function. In an IEEE C37.118 output stream, this identifies the ID of the aggregator, which is only used if there is more than 1 PMU mapped into an aggregator.

PMU AGGREGATOR1 PMU1 — If set to "Yes," aggregator 1 includes the PMU1 data set in the reporting data stream. AGGREGATOR1 does not include PMU1 data set in the report if set to "No."

NOTE

Only PMUs with same reporting rate can be assigned to the same PMU AGGREGATOR.

SETTINGS ⇨⇩ SYSTEM SETUP ⇨⇩ PHASOR MEASUREMENT UNIT ⇨⇩ PMU AGGREGATOR 1 ⇩ 37.118 AGGR 1 CONFIGURATION

■ 37.118 AGGR 1 ■ CONFIGURATION	⇔	PMU AGGREGATOR 1 TCP PORT: 4712 — Range: 1 to 65534
	⇩	PMU AGGREGATOR 1: UDP PORT: 4713 — Range: 1 to 65534
	⇧	PMU AGGREGATOR 1: PDC CONTROL: Disabled — Range: Disabled, Enabled

PMU AGGREGATOR 1 TCP PORT — Selects the TCP port number to be used by this aggregator for network reporting. All ports, even those of unused aggregators, must be valid and unique to avoid port number collisions.

PMU AGGREGATOR 1 UDP PORT — Selects the UDP port number to be used by this aggregator for network reporting. All ports, even those of unused aggregators, must be valid and unique to avoid port number collisions.

PMU AGGREGATOR 1 PDC CONTROL — The synchrophasor standard allows for user-defined controls originating at the PDC, to be executed on the PMU. The control is accomplished via an extended command frame. The relay decodes the first word of the extended field, EXTFRAME, to drive 16 dedicated FlexLogic operands. Each aggregator supports 16 FlexLogic operands, as shown in the table. The operands are asserted for five seconds following reception of the command frame. If the new command frame arrives within the five-second period, the FlexLogic operands are updated, and the five-second timer restarts. This setting enables or disables the control. When enabled, all 16 operands for each aggregator are active; when disabled, all 16 operands for each aggregator remain reset.

Table 5-20: FlexLogic operands supported by aggregator

Operand type	Operand syntax	Operand description
ELEMENT: Synchrophasor, phasor data, concentrator	AGTR1 PDC CNTRL 1	Phasor data concentrator asserts control bit 1, as received via the network
as above	AGTR1 PDC CNTRL 2	Phasor data concentrator asserts control bit 2 as received via the network
as above	AGTR1 PDC CNTRL 3	Phasor data concentrator asserts control bit 3 as received via the network
⇩		
as above	AGTR1 PDC CNTRL 16	Phasor data concentrator asserts control bit 16, as received via the network
as above	AGTR2 PDC CNTRL 1	Phasor data concentrator asserts control bit 1 as received via the network
as above	AGTR2 PDC CNTRL 2	Phasor data concentrator asserts control bit 2 as received via the network
as above	AGTR2 PDC CNTRL 3	Phasor data concentrator asserts control bit 3 as received via the network
⇩		
as above	AGTR1 PDC CNTRL 16	Phasor data concentrator asserts control bit 16, as received via the network

SETTINGS ⇨⇩ SYSTEM SETUP ⇨⇩ PHASOR MEASUREMENT UNIT ⇨⇩ PMU AGGREGATOR 1 ⇩ 90-5 AGGR 1 CONFIGURATION

■ 90-5 AGGR 1 CONFIGURATION

⇔ **PMU AGGREGATOR 1 NAME:** Range: 56-character ASCII text (blank by default)

⇩ **PMU AGGREGATOR 1: PORT: 1** Range: 1, 2, 3

⇩ **PMU AGGREGATOR 1: UDP PORT: 102** Range: 1 to 65534 in steps of 1

⇩ **PMU AGGREGATOR 1: NUMBER OF ASDUs: 1** Range: 1 to 4

PMU AGGREGATOR 1 NAME — A user-defined visible string of characters (maximum 56) to identify the source of the stream. This value, concatenated with the Aggregator IDCode and Aggregator Class of Service, is mapped into the IEC 61850 MSVID filed in the output stream. The field allows 65 characters, but uses the first 56 characters.

AGGREGATOR 1: PHYSICAL PORT — This setting determines the physical ports through which the synchrophasor traffic is transmitted. The range is 1, 2, 3.

PMU AGGREGATOR 1: UDP PORT — This setting selects the UDP port number that is used by this dataset for network reporting. A default setting value for IEC 6150-90-5 is provided.

PMU AGGREGATOR 1: NUMBER OF ASDUs — This setting sets the number of Application Service Data Units (ASDUs) from 1 through to 4.

Table 5-21: Number of ASDUs

Settings for ASDU	Transmission
1	ASDU at T0 (current values)
2	ASDU at T-1 (previous values) + ASDU at T0 (current values)
3	ASDU at T-2 (previous values) + ASDU at T-1 (previous values) + ASDU at T0 (current values)
4	ASDU at T-3 (previous values) + ASDU at T-2 (previous values) + ASDU at T-1 (previous values) + ASDU at T0 (current values)

5.5.7.20 Control blocks

SETTINGS ⇨⇩ SYSTEM SETUP ⇨⇩ PHASOR MEASUREMENT UNIT ⇨⇩ IEC 90 – 5 MSVCB01 CONFIGURATION

■ IEC 90-5 MSVCB
■ CONFIGURATION

⇔ **MSVCB 1 SVENA:** OFF — Range: FlexLogic operand

⇳ **MSVCB 1 CLIENT CTRL:** OFF — Range: FlexLogic operand

⇳ **MSVCB 1 SVENA DEFLT:** OFF — Range: FlexLogic operand

⇳ **MSVCB 1 CONFREV:** 1 — Range: 1 to 4294967295

⇳ **MSVCB 1 PRIORITY:** 4 — Range: 0 to 7

⇳ **MSVCB 1 IP CLASS:** 46 — Range: 0 to 252

⇳ **MSVCB 1 VID:** 0 — Range: 0 to 4095

⇳ **MSVCB 1 APPID:** 0 — Range: 0 to 16383

⇳ **MSVCB 1 DEST. IP:** 224.0.0.0 — Range: 0 to 255.255.255.255

⇧ **MSVCB 1 SECURITY:** 0 — Range: 0 to 2

MSVCB 1 SVENA — The SV Stream Control is set by either toggling an assigned FlexLogic operand or a remote client write, to start and stop the streaming of R-SV frames. If remote client control is disabled, a negative response is provided to the client in response to a write attempt. A FlexLogic operand (SvEna) is provided for each Aggregator that reflects the state of the SvEna control where "1"= Enabled and "0"=Disabled. The figure shows the logic for setting the SvEna control bit.

Figure 5-75: Logic for setting SvEna control bit

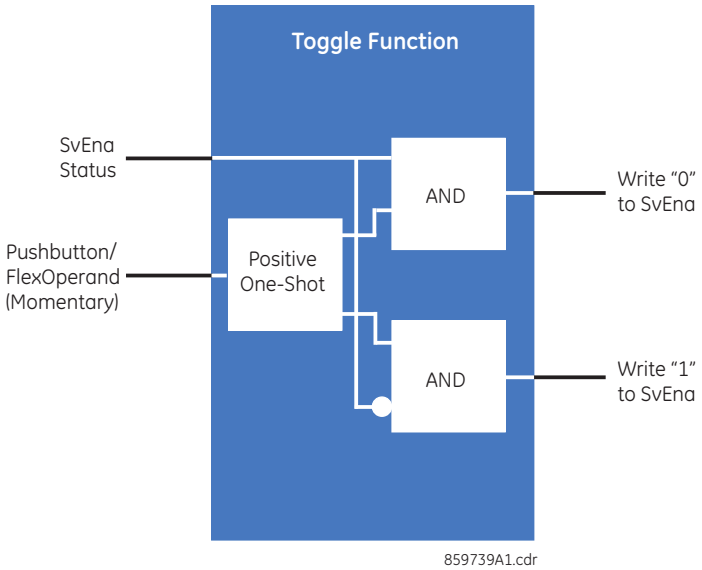

MSVCB 1 CLIENT CONTRL — This setting determines if a client can write to the reserve bit. When the assigned FlexLogic operand is a logic 1 state, remote clients can write to both the reserve bit and the SvEna bit. When the FlexLogic operand is a logic 0 state, the remote client writes to the reserve bit, the SvEna is rejected by the UR, and a negative response with the appropriate Service Error is returned to the client.

MSVCB 1 SVENA DEFLT — This setting sets the default state of the stream (On or Off) on power-up or restart.

MSVCB 1 CONFREV — The relay increments the Configuration revision every time the configuration is changed. This setting allows the user to reset the configuration back to 1 or a value from 1 to 4294967295.

MSVCB 1 PRIORITY — A value from 0 through 7. The default value is 4.

MSVCB 1 IP CLASS — The value represents the IPv4 Differentiated Services (formerly called TypeOfService) value. The default value is set for Expedited Forwarding (101110B (46 or 2EH). This value provides priority routing, when supported in the routers.

MSVCB 1 VID — A range of values limited from 0 to 4095.

MSVCB 1 APPID — This setting allows the selection of a specific application ID for each sending device.

MSVCB 1 DEST. IP — This is the destination multicast IP address that is entered in Standard IPV4 address format. The valid range for IPv4 is from 224.0.0.0 to 239.255.255.255. The UR does not test the address entered.

MSVCB 1 SECURITY — This setting selects the level of security and authentication used, as outlined in the following table, and is in the form of an enumeration as per standard. The range is 0 to 2.

NOTE

Shaded settings in the table are not supported in firmware 7.0.

Table 5-22: Security

Enumeration	Authentication	Encryption
0	No	No
1	Yes	No
2	Yes	Yes

5.6 FlexLogic

5.6.1 FlexLogic operands

For flexibility, the arrangement of internal digital logic combines fixed and user-programmed parameters. Logic upon which individual features are designed is fixed, and all other logic, from contact input signals through elements or combinations of elements to contact outputs, is variable. The user has complete control of all variable logic through FlexLogic. In general, the system receives analog and digital inputs that it uses to produce analog and digital outputs. The figure shows major subsystems of a generic UR-series relay involved in this process.

Figure 5-76: UR architecture overview

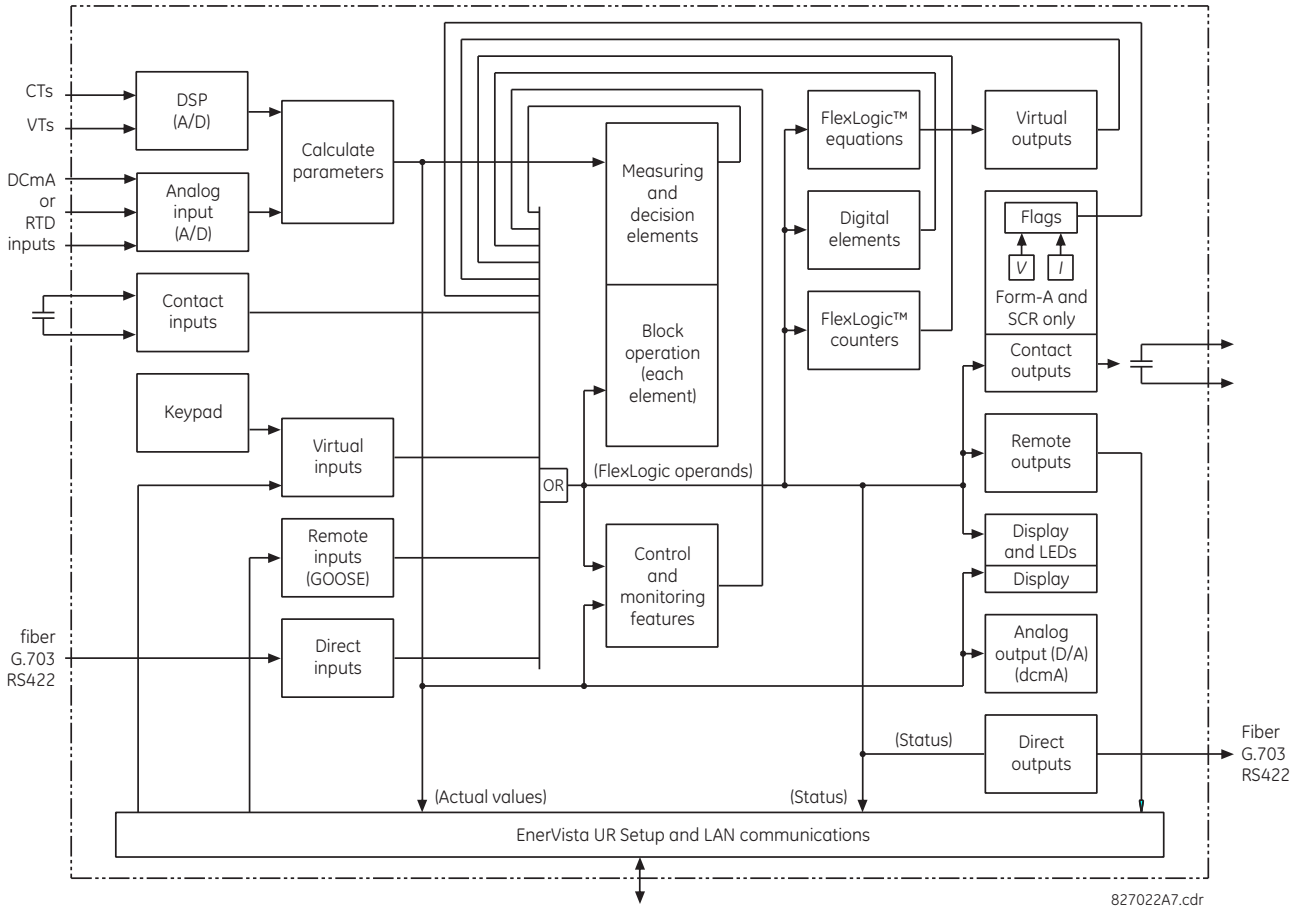

The states of all digital signals used in the F60 are represented by flags (or FlexLogic operands, which are described later in this section). A digital "1" is represented by a set flag. Any external contact change-of-state can be used to block an element from operating, as an input to a control feature in a FlexLogic equation, or to operate a contact output. The state of the contact input can be displayed locally or viewed remotely via the communications facilities provided. If a simple scheme where a contact input is used to block an element is wanted, this selection is made when programming the element. This capability also applies to the other features that set flags: elements, virtual inputs, remote inputs, schemes, and human operators.

If more complex logic than shown in the figure is required, it is implemented via FlexLogic. For example, to have the closed state of contact input H7a and the operated state of the phase undervoltage element block the operation of the phase time overcurrent element, the two control input states are programmed in a FlexLogic equation. This equation ANDs the two control inputs to produce a virtual output that is then selected when programming the phase time overcurrent to be used as a blocking input. Virtual outputs can only be created by FlexLogic equations.

Traditionally, protective relay logic has been relatively limited. Any unusual applications involving interlocks, blocking, or supervisory functions had to be hard-wired using contact inputs and outputs. FlexLogic minimizes the requirement for auxiliary components and wiring while making more complex schemes possible.

The logic that determines the interaction of inputs, elements, schemes, and outputs is field-programmable through the use of logic equations that are sequentially processed. The use of virtual inputs and outputs in addition to hardware is available internally and on the communication ports for other relays to use (distributed FlexLogic).

FlexLogic allows users to customize the relay through a series of equations that consist of operators and operands. The operands are the states of inputs, elements, schemes, and outputs. The operators are logic gates, timers, and latches (with set and reset inputs). A system of sequential operations allows any combination of operands to be assigned as inputs to specified operators to create an output. The final output of an equation is a numbered register called a virtual output. Virtual outputs can be used as an input operand in any equation, including the equation that generates the output, as a seal-in or other type of feedback.

A FlexLogic equation consists of parameters that are either operands or operators. Operands have a logic state of 1 or 0. Operators provide a defined function, such as an AND gate or a Timer. Each equation defines the combinations of parameters to be used to set a Virtual Output flag. Evaluation of an equation results in either a 1 (=ON, or flag set) or 0 (=OFF, or flag not set). Each equation is evaluated at least four times every power system cycle.

Some types of operands are present in the relay in multiple instances, for example contact and remote inputs. These types of operands are grouped together (for presentation purposes only) on the faceplate display. The table lists characteristics of the different types of operands.

Table 5-23: F60 FlexLogic operand types

Operand type	State	Example of format	Characteristics [Input Is '1' (= ON) if...]
Contact Input	On	Cont Ip On	Voltage is applied presently to the input (external contact closed)
	Off	Cont Ip Off	Voltage is not applied presently to the input (external contact open)
Contact Output (type Form-A contact only)	Contact Closed	Cont Op 1 Closed	Contact output is closed
	Current On	Cont Op 1 Ion	Current is flowing through the contact
	Voltage On	Cont Op 1 VOn	Voltage exists across the contact
	On	DIRECT INPUT 1 On	The direct input is presently in the ON state
Element (Analog)	Pickup	PHASE TOC1 PKP	The tested parameter is presently above the pickup setting of an element that responds to rising values or below the pickup setting of an element that responds to falling values
	Dropout	PHASE TOC1 DPO	This operand is the logical inverse of the above PKP operand
	Operate	PHASE TOC1 OP	The tested parameter has been above/below the pickup setting of the element for the programmed delay time, or has been at logic 1 and is now at logic 0 but the reset timer has not finished timing
	Block	PHASE TOC1 BLK	The output of the comparator is set to the block function
Element (Digital)	Pickup	Dig Element 1 PKP	The input operand is at logic 1
	Dropout	Dig Element 1 DPO	This operand is the logical inverse of the above PKP operand
	Operate	Dig Element 1 OP	The input operand has been at logic 1 for the programmed pickup delay time, or has been at logic 1 for this period and is now at logic 0 but the reset timer has not finished timing
Element (Digital Counter)	Higher than	Counter 1 HI	The number of pulses counted is above the set number
	Equal to	Counter 1 EQL	The number of pulses counted is equal to the set number
	Lower than	Counter 1 LO	The number of pulses counted is below the set number
Fixed	On	On	Logic 1
	Off	Off	Logic 0

Operand type	State	Example of format	Characteristics [Input Is '1' (= ON) if...]
RxGOOSE Boolean	On	RxGOOSE Boolean 1 On	The RxGOOSE Boolean is presently in the ON state
Virtual Input	On	Virt Ip 1 On	The virtual input is presently in the ON state
Virtual Output	On	Virt Op 1 On	The virtual output is presently in the set state (that is, evaluation of the equation that produces this virtual output results in a "1")

The following table lists alphabetically the operands available for the relay. The operands can be viewed online by entering the IP address of the relay in a web browser and accessing the Device Information Menu.

Table 5-24: F60 FlexLogic operands

Operand type	Operand syntax	Operand description
CONTROL PUSHBUTTONS	CONTROL PUSHBTN 1 ON CONTROL PUSHBTN 2 ON CONTROL PUSHBTN 3 ON CONTROL PUSHBTN 4 ON CONTROL PUSHBTN 5 ON CONTROL PUSHBTN 6 ON CONTROL PUSHBTN 7 ON	Control pushbutton 1 is being pressed Control pushbutton 2 is being pressed Control pushbutton 3 is being pressed Control pushbutton 4 is being pressed Control pushbutton 5 is being pressed Control pushbutton 6 is being pressed Control pushbutton 7 is being pressed
CYBERSENTRY	ROLE ADMIN ACT ROLE SUPERVISOR ACT ROLE ENGINEER ACT ROLE OPERATOR ACT ROLE OBSERVER ACT AUTHENTICATION FAIL UNAUTH FW ATTEMPT UNAUTH SETTING WRITE	Administrator role is active and is set to true when that is the case Supervisor role is active and is set to true when that is the case Engineer role is active and is set to true when that is the case Operator role is active and is set to true when that is the case Observer role is active and is set to true when that is the case Operand set for Failed Authentication self-test and alarm Operand set for firmware lock self-test and alarm Operand set for settings lock self-test and alarm
DIRECT DEVICES	DIRECT DEVICE 1On ↓ DIRECT DEVICE 16On DIRECT DEVICE 1Off ↓ DIRECT DEVICE 16Off	Flag is set, logic=1 ↓ Flag is set, logic=1 Flag is set, logic=1 ↓ Flag is set, logic=1
DIRECT INPUT/ OUTPUT CHANNEL MONITORING	DIR IO CH1 CRC ALARM DIR IO CH2 CRC ALARM DIR IO CH1 UNRET ALM DIR IO CH2 UNRET ALM	The rate of direct input messages received on channel 1 and failing the CRC exceeded the user-specified level The rate of direct input messages received on channel 2 and failing the CRC exceeded the user-specified level The rate of returned direct input/output messages on channel 1 exceeded the user-specified level (ring configurations only) The rate of returned direct input/output messages on channel 2 exceeded the user-specified level (ring configurations only)
ELEMENT: Autoreclose (per CT bank)	AR1 ENABLED AR1 RIP AR1 LO AR1 BLK FROM MAN CLS AR1 CLOSE AR1 SHOT CNT=0 AR1 SHOT CNT=1 AR1 SHOT CNT=2 AR1 SHOT CNT=3 AR1 SHOT CNT=4 AR1 DISABLED	Autoreclose 1 is enabled Autoreclose 1 is in progress Autoreclose 1 is locked out Autoreclose 1 is temporarily disabled Autoreclose 1 close command is issued Autoreclose 1 shot count is 0 Autoreclose 1 shot count is 1 Autoreclose 1 shot count is 2 Autoreclose 1 shot count is 3 Autoreclose 1 shot count is 4 Autoreclose 1 is disabled
	AR2	Same set of operands as shown for AR1
ELEMENT: Auxiliary overvoltage	AUX OV1 PKP AUX OV1 DPO AUX OV1 OP	Auxiliary overvoltage element has picked up Auxiliary overvoltage element has dropped out Auxiliary overvoltage element has operated
	AUX OV2	Same set of operands as shown for AUX OV1
ELEMENT: Auxiliary undervoltage	AUX UV1 PKP AUX UV1 DPO AUX UV1 OP	Auxiliary undervoltage element has picked up Auxiliary undervoltage element has dropped out Auxiliary undervoltage element has operated
	AUX UV2	Same set of operands as shown for AUX UV1

Operand type	Operand syntax	Operand description
ELEMENT: Breaker flashover	BKR 1 FLSHOVR PKP A	Breaker 1 flashover element phase A has picked up
	BKR 1 FLSHOVR PKP B	Breaker 1 flashover element phase B has picked up
	BKR 1 FLSHOVR PKP C	Breaker 1 flashover element phase C has picked up
	BKR 1 FLSHOVR PKP	Breaker 1 flashover element has picked up
	BKR 1 FLSHOVR OP A	Breaker 1 flashover element phase A has operated
	BKR 1 FLSHOVR OP B	Breaker 1 flashover element phase B has operated
	BKR 1 FLSHOVR OP C	Breaker 1 flashover element phase C has operated
	BKR 1 FLSHOVR OP	Breaker 1 flashover element has operated
	BKR 1 FLSHOVR DPO A	Breaker 1 flashover element phase A has dropped out
	BKR 1 FLSHOVR DPO B	Breaker 1 flashover element phase B has dropped out
	BKR 1 FLSHOVR DPO C	Breaker 1 flashover element phase C has dropped out
	BKR 1 FLSHOVR DPO	Breaker 1 flashover element has dropped out
	BKR 2 FLSHOVR	Same set of operands as shown for BKR 1 FLSHOVR
ELEMENT: Breaker arcing	BKR ARC 1 OP	Breaker arcing current 1 has operated
	BKR ARC 1 DPO	Breaker arcing current 1 has dropped out
	BKR ARC 2 OP	Breaker arcing current 2 has operated
	BKR ARC 2 DPO	Breaker arcing current 2 has dropped out
ELEMENT: Breaker failure	BKR FAIL 1 RETRIPA	Breaker failure 1 re-trip phase A (only for 1-pole schemes)
	BKR FAIL 1 RETRIPB	Breaker failure 1 re-trip phase B (only for 1-pole schemes)
	BKR FAIL 1 RETRIPC	Breaker failure 1 re-trip phase C (only for 1-pole schemes)
	BKR FAIL 1 RETRIP	Breaker failure 1 re-trip 3-phase
	BKR FAIL 1 T1 OP	Breaker failure 1 timer 1 is operated
	BKR FAIL 1 T2 OP	Breaker failure 1 timer 2 is operated
	BKR FAIL 1 T3 OP	Breaker failure 1 timer 3 is operated
	BKR FAIL 1 TRIP OP	Breaker failure 1 trip is operated
	BKR FAIL 2	Same set of operands as shown for BKR FAIL 1
ELEMENT: Breaker restrike	BRK RESTRIKE 1 OP	Breaker restrike detected in any phase of the breaker control 1 element
	BRK RESTRIKE 1 OP A	Breaker restrike detected in phase A of the breaker control 1 element
	BRK RESTRIKE 1 OP B	Breaker restrike detected in phase B of the breaker control 1 element
	BRK RESTRIKE 1 OP C	Breaker restrike detected in phase C of the breaker control 1 element
ELEMENT: Breaker control	BREAKER 1 OFF CMD	Breaker 1 open command initiated
	BREAKER 1 ON CMD	Breaker 1 close command initiated
	BREAKER 1 ΦA BAD ST	Breaker 1 phase A bad status is detected (discrepancy between the 52/a and 52/b contacts)
	BREAKER 1 ΦA INTERM	Breaker 1 phase A intermediate status is detected (transition from one position to another)
	BREAKER 1 ΦA CLSD	Breaker 1 phase A is closed
	BREAKER 1 ΦA OPEN	Breaker 1 phase A is open
	BREAKER 1 ΦB BAD ST	Breaker 1 phase B bad status is detected (discrepancy between the 52/a and 52/b contacts)
	BREAKER 1 ΦB INTERM	Breaker 1 phase B intermediate status is detected (transition from one position to another)
	BREAKER 1 ΦB CLSD	Breaker 1 phase B is closed
	BREAKER 1 ΦB OPEN	Breaker 1 phase B is open
	BREAKER 1 ΦC BAD ST	Breaker 1 phase C bad status is detected (discrepancy between the 52/a and 52/b contacts)
	BREAKER 1 ΦC INTERM	Breaker 1 phase C intermediate status is detected (transition from one position to another)
	BREAKER 1 ΦC CLSD	Breaker 1 phase C is closed
	BREAKER 1 ΦC OPEN	Breaker 1 phase C is open
	BREAKER 1 BAD STATUS	Breaker 1 bad status is detected on any pole
	BREAKER 1 CLOSED	Breaker 1 is closed
	BREAKER 1 OPEN	Breaker 1 is open
	BREAKER 1 DISCREP	Breaker 1 has discrepancy
	BREAKER 1 TROUBLE	Breaker 1 trouble alarm
	BREAKER 1 MNL CLS	Breaker 1 manual close
	BREAKER 1 TRIP A	Breaker 1 trip phase A command
	BREAKER 1 TRIP B	Breaker 1 trip phase B command
	BREAKER 1 TRIP C	Breaker 1 trip phase C command
	BREAKER 1 ANY P OPEN	At least one pole of breaker 1 is open
	BREAKER 1 ONE P OPEN	Only one pole of breaker 1 is open
	BREAKER 1 OOS	Breaker 1 is out of service
	BREAKER 2 to 4	Same set of operands as shown for BREAKER 1

Operand type	Operand syntax	Operand description
ELEMENT: Broken conductor	BROKEN CONDUCT 1 OP BROKEN CONDUCT 1 PKP	Asserted when the broken conductor 1 element operates Asserted when the broken conductor 1 element picks up
	BROKEN CONDUCT 2 to 4	Same set of operands as shown for BROKEN CONDUCTOR 1
ELEMENT: Cold load pickup	COLD LOAD 1 OP COLD LOAD 2 OP	Cold load pickup element 1 has operated Cold load pickup element 2 has operated
ELEMENT: Digital counters	Counter 1 HI Counter 1 EQL Counter 1 LO	Digital counter 1 output is 'more than' comparison value Digital counter 1 output is 'equal to' comparison value Digital counter 1 output is 'less than' comparison value
	Counter 2 to 8	Same set of operands as shown for Counter 1
ELEMENT: Digital elements	Dig Element 1 PKP Dig Element 1 OP Dig Element 1 DPO	Digital Element 1 is picked up Digital Element 1 is operated Digital Element 1 is dropped out
	Dig Element 2 to 48	Same set of operands as shown for Dig Element 1
ELEMENT: Sensitive directional power	DIR POWER 1 STG1 PKP DIR POWER 1 STG2 PKP DIR POWER 1 STG1 DPO DIR POWER 1 STG2 DPO DIR POWER 1 STG1 OP DIR POWER 1 STG2 OP DIR POWER 1 PKP DIR POWER 1 DPO DIR POWER 1 OP	Stage 1 of the directional power element 1 has picked up Stage 2 of the directional power element 1 has picked up Stage 1 of the directional power element 1 has dropped out Stage 2 of the directional power element 1 has dropped out Stage 1 of the directional power element 1 has operated Stage 2 of the directional power element 1 has operated The directional power element has picked up The directional power element has dropped out The directional power element has operated
	DIR POWER 2	Same set of operands as DIR POWER 1
ELEMENT: Frequency rate of change	FREQ RATE 1 PKP FREQ RATE 1 DPO FREQ RATE 1 OP	The frequency rate of change 1 element has picked up The frequency rate of change 1 element has dropped out The frequency rate of change 1 element has operated
	FREQ RATE 2 to 4	Same set of operands as shown for FREQ RATE 1
ELEMENT: FlexElements	FxE 1 PKP FxE 1 OP FxE 1 DPO	FlexElement 1 has picked up FlexElement 1 has operated FlexElement 1 has dropped out
	FxE 2 to 8	Same set of operands as shown for FxE 1
ELEMENT: Ground instantaneous overcurrent	GROUND IOC1 PKP GROUND IOC1 OP GROUND IOC1 DPO	Ground instantaneous overcurrent 1 has picked up Ground instantaneous overcurrent 1 has operated Ground instantaneous overcurrent 1 has dropped out
	GROUND IOC2 to 8	Same set of operands as shown for GROUND IOC 1
ELEMENT: Ground time overcurrent	GROUND TOC1 PKP GROUND TOC1 OP GROUND TOC1 DPO	Ground time overcurrent 1 has picked up Ground time overcurrent 1 has operated Ground time overcurrent 1 has dropped out
	GROUND TOC2 to 4	Same set of operands as shown for GROUND TOC1

Operand type	Operand syntax	Operand description
ELEMENT: High impedance fault detection (Hi-Z)	HI-Z ARC DETECTED	The high impedance fault detection element has operated
	HI-Z ARC DETECTED-A	The high impedance fault detection phase A element has operated
	HI-Z ARC DETECTED-B	The high impedance fault detection phase B element has operated
	HI-Z ARC DETECTED-C	The high impedance fault detection phase C element has operated
	HI-Z ARC DETECTED-N	The high impedance fault detection neutral element has operated
	HI-Z ARC DETECTED DPO	No arcing has been detected
	HI-Z ARMED	The high impedance fault detection element is in the armed state
	HI-Z DISARMED	The high impedance fault detection element is in the disarmed state
	HI-Z DOWNED COND	The high impedance fault downed conductor element has operated
	HI-Z DOWNED COND-A	The high impedance fault downed conductor phase A element has operated
	HI-Z DOWNED COND-B	The high impedance fault downed conductor phase B element has operated
	HI-Z DOWNED COND-C	The high impedance fault downed conductor phase C element has operated
	HI-Z DOWNED COND-N	The high impedance fault downed conductor neutral element has operated
	HI-Z ARC SUSPECTED	The high impedance fault detection arcing suspected element has operated
	HI-Z ARC SUSPECTED-A	The high impedance fault arcing suspected phase A element has operated
	HI-Z ARC SUSPECTED-B	The high impedance fault arcing suspected phase B element has operated
	HI-Z ARC SUSPECTED-C	The high impedance fault arcing suspected phase C element has operated
	HI-Z ARC SUSPECTED-N	The high impedance fault arcing suspected neutral element has operated
	HI-Z IOC A	The high impedance instantaneous overcurrent A element has operated
	HI-Z IOC B	The high impedance instantaneous overcurrent B element has operated
	HI-Z IOC C	The high impedance instantaneous overcurrent C element has operated
	HI-Z LOSS OF LOAD-A	The high impedance fault phase A loss of load element has operated
	HI-Z LOSS OF LOAD-B	The high impedance fault phase B loss of load element has operated
	HI-Z LOSS OF LOAD-C	The high impedance fault phase C loss of load element has operated
ELEMENT: Incipient cable fault detection	INCIPNT FLT 1 OP	Asserted when incipient cable fault detector 1 operates in any phase
	INCIPNT FLT 1 OP A	Asserted when incipient cable fault detector 1 operates in phase A
	INCIPNT FLT 1 OP B	Asserted when incipient cable fault detector 1 operates in phase B
	INCIPNT FLT 1 OP C	Asserted when incipient cable fault detector 1 operates in phase C
	INCIPNT FLT 1 PKP	Asserted when incipient cable fault detector 1 picks up in any phase
	INCIPNT FLT 1 PKP A	Asserted when incipient cable fault detector 1 picks up in phase A
	INCIPNT FLT 1 PKP B	Asserted when incipient cable fault detector 1 picks up in phase B
	INCIPNT FLT 1 PKP C	Asserted when incipient cable fault detector 1 picks up in phase C
	INCIPNT FLT 2	Same set of operands as shown for INCIPNT FLT 1
ELEMENT: Non-volatile latches	LATCH 1 ON	Non-volatile latch 1 is ON (Logic = 1)
	LATCH 1 OFF	Non-volatile latch 1 is OFF (Logic = 0)
	LATCH 2 to 16	Same set of operands as shown for LATCH 1
ELEMENT: Load encroachment	LOAD ENCHR PKP	Load encroachment has picked up
	LOAD ENCHR OP	Load encroachment has operated
	LOAD ENCHR DPO	Load encroachment has dropped out
ELEMENT: Negative-sequence directional overcurrent	NEG SEQ DIR OC1 FWD	Negative-sequence directional overcurrent 1 forward has operated
	NEG SEQ DIR OC1 REV	Negative-sequence directional overcurrent 1 reverse has operated
	NEG SEQ DIR OC2 FWD	Negative-sequence directional overcurrent 2 forward has operated
	NEG SEQ DIR OC2 REV	Negative-sequence directional overcurrent 2 reverse has operated
ELEMENT: Negative-sequence instantaneous overcurrent	NEG SEQ IOC1 PKP	Negative-sequence instantaneous overcurrent 1 has picked up
	NEG SEQ IOC1 OP	Negative-sequence instantaneous overcurrent 1 has operated
	NEG SEQ IOC1 DPO	Negative-sequence instantaneous overcurrent 1 has dropped out
	NEG SEQ IOC2	Same set of operands as shown for NEG SEQ IOC1
ELEMENT: Negative-sequence overvoltage	NEG SEQ OV1 PKP	Negative-sequence overvoltage element has picked up
	NEG SEQ OV1 DPO	Negative-sequence overvoltage element has dropped out
	NEG SEQ OV1 OP	Negative-sequence overvoltage element has operated
	NEG SEQ OV2 to 3	Same set of operands as shown for NEG SEQ OV1
ELEMENT: Negative-sequence time overcurrent	NEG SEQ TOC1 PKP	Negative-sequence time overcurrent 1 has picked up
	NEG SEQ TOC1 OP	Negative-sequence time overcurrent 1 has operated
	NEG SEQ TOC1 DPO	Negative-sequence time overcurrent 1 has dropped out
	NEG SEQ TOC2	Same set of operands as shown for NEG SEQ TOC1
ELEMENT: Neutral instantaneous overcurrent	NEUTRAL IOC1 PKP	Neutral instantaneous overcurrent 1 has picked up
	NEUTRAL IOC1 OP	Neutral instantaneous overcurrent 1 has operated
	NEUTRAL IOC1 DPO	Neutral instantaneous overcurrent 1 has dropped out
	NEUTRAL IOC2 to 8	Same set of operands as shown for NEUTRAL IOC1

Operand type	Operand syntax	Operand description
ELEMENT: Neutral overvoltage	NEUTRAL OV1 PKP NEUTRAL OV1 DPO NEUTRAL OV1 OP	Neutral overvoltage element 1 has picked up Neutral overvoltage element 1 has dropped out Neutral overvoltage element 1 has operated
	NEUTRAL OV2 to 3	Same set of operands as shown for NEUTRAL OV1
ELEMENT: Neutral time overcurrent	NEUTRAL TOC1 PKP NEUTRAL TOC1 OP NEUTRAL TOC1 DPO	Neutral time overcurrent 1 has picked up Neutral time overcurrent 1 has operated Neutral time overcurrent 1 has dropped out
	NEUTRAL TOC2 to 4	Same set of operands as shown for NEUTRAL TOC1
ELEMENT: Neutral directional overcurrent	NTRL DIR OC1 FWD NTRL DIR OC1 REV	Neutral directional overcurrent 1 forward has operated Neutral directional overcurrent 1 reverse has operated
	NTRL DIR OC2	Same set of operands as shown for NTRL DIR OC1
ELEMENT: Overfrequency	OVERFREQ 1 PKP OVERFREQ 1 OP OVERFREQ 1 DPO	Overfrequency 1 has picked up Overfrequency 1 has operated Overfrequency 1 has dropped out
	OVERFREQ 2 to 4	Same set of operands as shown for OVERFREQ 1
ELEMENT: Synchrophasor phasor data concentrator	PDC NETWORK CNTRL 1 PDC NETWORK CNTRL 2 ↓ PDC NETWORK CNTRL 16	Phasor data concentrator asserts control bit 1 as received via the network Phasor data concentrator asserts control bit 2 as received via the network ↓ Phasor data concentrator asserts control bit 16 as received via the network
ELEMENT: Phase directional overcurrent	PH DIR1 BLK A PH DIR1 BLK B PH DIR1 BLK C PH DIR1 BLK	Phase A directional 1 block Phase B directional 1 block Phase C directional 1 block Phase directional 1 block
	PH DIR2	Same set of operands as shown for PH DIR1
ELEMENT: Phase instantaneous overcurrent	PHASE IOC1 PKP PHASE IOC1 OP PHASE IOC1 DPO PHASE IOC1 PKP A PHASE IOC1 PKP B PHASE IOC1 PKP C PHASE IOC1 OP A PHASE IOC1 OP B PHASE IOC1 OP C PHASE IOC1 DPO A PHASE IOC1 DPO B PHASE IOC1 DPO C	At least one phase of phase instantaneous overcurrent 1 has picked up At least one phase of phase instantaneous overcurrent 1 has operated All phases of phase instantaneous overcurrent 1 have dropped out Phase A of phase instantaneous overcurrent 1 has picked up Phase B of phase instantaneous overcurrent 1 has picked up Phase C of phase instantaneous overcurrent 1 has picked up Phase A of phase instantaneous overcurrent 1 has operated Phase B of phase instantaneous overcurrent 1 has operated Phase C of phase instantaneous overcurrent 1 has operated Phase A of phase instantaneous overcurrent 1 has dropped out Phase B of phase instantaneous overcurrent 1 has dropped out Phase C of phase instantaneous overcurrent 1 has dropped out
	PHASE IOC2 to 8	Same set of operands as shown for PHASE IOC1
ELEMENT: Phase overvoltage	PHASE OV1 PKP PHASE OV1 OP PHASE OV1 DPO PHASE OV1 PKP A PHASE OV1 PKP B PHASE OV1 PKP C PHASE OV1 OP A PHASE OV1 OP B PHASE OV1 OP C PHASE OV1 DPO A PHASE OV1 DPO B PHASE OV1 DPO C	At least one phase of overvoltage 1 has picked up At least one phase of overvoltage 1 has operated All phases of overvoltage 1 have dropped out Phase A of overvoltage 1 has picked up Phase B of overvoltage 1 has picked up Phase C of overvoltage 1 has picked up Phase A of overvoltage 1 has operated Phase B of overvoltage 1 has operated Phase C of overvoltage 1 has operated Phase A of overvoltage 1 has dropped out Phase B of overvoltage 1 has dropped out Phase C of overvoltage 1 has dropped out
	PHASE OV2 to 3	Same set of operands as shown for PHASE OV1

Operand type	Operand syntax	Operand description
ELEMENT: Phase time overcurrent	PHASE TOC1 PKP	At least one phase of phase time overcurrent 1 has picked up
	PHASE TOC1 OP	At least one phase of phase time overcurrent 1 has operated
	PHASE TOC1 DPO	All phases of phase time overcurrent 1 have dropped out
	PHASE TOC1 PKP A	Phase A of phase time overcurrent 1 has picked up
	PHASE TOC1 PKP B	Phase B of phase time overcurrent 1 has picked up
	PHASE TOC1 PKP C	Phase C of phase time overcurrent 1 has picked up
	PHASE TOC1 OP A	Phase A of phase time overcurrent 1 has operated
	PHASE TOC1 OP B	Phase B of phase time overcurrent 1 has operated
	PHASE TOC1 OP C	Phase C of phase time overcurrent 1 has operated
	PHASE TOC1 DPO A	Phase A of phase time overcurrent 1 has dropped out
	PHASE TOC1 DPO B	Phase B of phase time overcurrent 1 has dropped out
	PHASE TOC1 DPO C	Phase C of phase time overcurrent 1 has dropped out
	PHASE TOC2 to 4	Same set of operands as shown for PHASE TOC1
ELEMENT: Phase undervoltage	PHASE UV1 PKP	At least one phase of phase undervoltage 1 has picked up
	PHASE UV1 OP	At least one phase of phase undervoltage 1 has operated
	PHASE UV1 DPO	All phases of phase undervoltage 1 have dropped out
	PHASE UV1 PKP A	Phase A of phase undervoltage 1 has picked up
	PHASE UV1 PKP B	Phase B of phase undervoltage 1 has picked up
	PHASE UV1 PKP C	Phase C of phase undervoltage 1 has picked up
	PHASE UV1 OP A	Phase A of phase undervoltage 1 has operated
	PHASE UV1 OP B	Phase B of phase undervoltage 1 has operated
	PHASE UV1 OP C	Phase C of phase undervoltage 1 has operated
	PHASE UV1 DPO A	Phase A of phase undervoltage 1 has dropped out
	PHASE UV1 DPO B	Phase B of phase undervoltage 1 has dropped out
	PHASE UV1 DPO C	Phase C of phase undervoltage 1 has dropped out
	PHASE UV2 to 3	Same set of operands as shown for PHASE UV1
ELEMENT: Synchrophasor Phasor Measurement Unit (PMU)	PMU Agg 1 SvEng On	SvEng data item in associated control block is on
	PMU 1 CURR TRIGGER	Overcurrent trigger of phasor measurement unit 1 has operated
	PMU 1 FREQ TRIGGER	Abnormal frequency trigger of phasor measurement unit 1 has operated
	PMU 1 POWER TRIGGER	Overpower trigger of phasor measurement unit 1 has operated
	PMU 1 ROCOF TRIGGER	Rate of change of frequency trigger of phasor measurement unit 1 has operated
	PMU 1 VOLT TRIGGER	Abnormal voltage trigger of phasor measurement unit 1 has operated
	PMU 1 TRIGGERED	Phasor measurement unit 1 triggered; no events or targets are generated by this operand
ELEMENT: Synchrophasor one-shot	PMU ONE-SHOT EXPIRED	Indicates the one-shot operation has been executed, and the present time is at least 30 seconds past the scheduled one-shot time
	PMU ONE-SHOT OP	Indicates the one-shot operation and remains asserted for 30 seconds afterwards
	PMU ONE-SHOT PENDING	Indicates the one-shot operation is pending; that is, the present time is before the scheduled one-shot time
ELEMENT: Restricted ground fault	RESTD GND FT1 PKP	Restricted ground fault 1 has picked up
	RESTD GND FT1 OP	Restricted ground fault 1 has operated
	RESTD GND FT1 DPO	Restricted ground fault 1 has dropped out
	RESTD GND FT2 to 6	Same set of operands as shown for RESTD GND FT1
ELEMENT: Selector switch	SELECTOR 1 POS Y	Selector switch 1 is in Position Y (mutually exclusive operands)
	SELECTOR 1 BIT 0	First bit of the 3-bit word encoding position of selector 1
	SELECTOR 1 BIT 1	Second bit of the 3-bit word encoding position of selector 1
	SELECTOR 1 BIT 2	Third bit of the 3-bit word encoding position of selector 1
	SELECTOR 1 STP ALARM	Position of selector 1 has been pre-selected with the stepping up control input but not acknowledged
	SELECTOR 1 BIT ALARM	Position of selector 1 has been pre-selected with the 3-bit control input but not acknowledged
	SELECTOR 1 ALARM	Position of selector 1 has been pre-selected but not acknowledged
	SELECTOR 1 PWR ALARM	Position of selector switch 1 is undetermined or restored from memory when the relay powers up and synchronizes to the three-bit input
	SELECTOR 2	Same set of operands as shown for SELECTOR 1
ELEMENT: Setting group	SETTING GROUP ACT 1	Setting group 1 is active
	SETTING GROUP ACT 2	Setting group 2 is active
	SETTING GROUP ACT 3	Setting group 3 is active
	SETTING GROUP ACT 4	Setting group 4 is active
	SETTING GROUP ACT 5	Setting group 5 is active
	SETTING GROUP ACT 6	Setting group 6 is active

Operand type	Operand syntax	Operand description
ELEMENT: Disturbance detector	SRC1 50DD OP SRC2 50DD OP SRC3 50DD OP SRC4 50DD OP	Source 1 disturbance detector has operated Source 2 disturbance detector has operated Source 3 disturbance detector has operated Source 4 disturbance detector has operated
ELEMENT: VTFF (Voltage transformer fuse failure)	SRC1 VT FF OP SRC1 VT FF DPO SRC1 VT FF VOL LOSS SRC1 VT FF ALARM	Source 1 VT fuse failure detector has operated Source 1 VT fuse failure detector has dropped out Source 1 has lost voltage signals (V2 below 10% and V1 below 5% of nominal) Source 1 has triggered a VT fuse failure alarm
	SRC1 VT NEU WIRE OPEN	Source 1 VT neutral wire open detected. When the VT is connected in Delta, do not enable this function because there is no neutral wire for Delta connected VT.
	SRC2 VT FUSE FAIL to SRC4	Same set of operands as shown for SRC1 VT FF
ELEMENT: Disconnect switch	SWITCH 1 OFF CMD SWITCH 1 ON CMD SWITCH 1 CLOSED SWITCH 1 OPEN SWITCH 1 DISCREP SWITCH 1 TROUBLE SWITCH 1 ΦA CLSD SWITCH 1 ΦA OPEN SWITCH 1 ΦA BAD ST SWITCH 1 ΦA INTERM SWITCH 1 ΦB CLSD SWITCH 1 ΦB OPEN SWITCH 1 ΦB BAD ST SWITCH 1 ΦB INTERM SWITCH 1 ΦC CLSD SWITCH 1 ΦC OPEN SWITCH 1 ΦC BAD ST SWITCH 1 ΦC INTERM SWITCH 1 BAD STATUS	Disconnect switch 1 open command initiated Disconnect switch 1 close command initiated Disconnect switch 1 is closed Disconnect switch 1 is open Disconnect switch 1 has discrepancy Disconnect switch 1 trouble alarm Disconnect switch 1 phase A is closed Disconnect switch 1 phase A is open Disconnect switch 1 phase A bad status is detected (discrepancy between the 89/a and 89/b contacts) Disconnect switch 1 phase A intermediate status is detected (transition from one position to another) Disconnect switch 1 phase B is closed Disconnect switch 1 phase B is open Disconnect switch 1 phase B bad status is detected (discrepancy between the 89/a and 89/b contacts) Disconnect switch 1 phase B intermediate status is detected (transition from one position to another) Disconnect switch 1 phase C is closed Disconnect switch 1 phase C is open Disconnect switch 1 phase C bad status is detected (discrepancy between the 89/a and 89/b contacts) Disconnect switch 1 phase C intermediate status is detected (transition from one position to another) Disconnect switch 1 bad status is detected on any pole
	SWITCH 2 to 16	Same set of operands as shown for SWITCH 1
ELEMENT: Synchrocheck	SYNC1 DEAD S OP SYNC1 DEAD S DPO SYNC1 SYNC OP SYNC1 SYNC DPO SYNC1 CLS OP SYNC1 CLS DPO SYNC1 V1 ABOVE MIN SYNC1 V1 BELOW MAX SYNC1 V2 ABOVE MIN SYNC1 V2 BELOW MAX SYNC1 S-CLOSE OP SYNC1 S-CLOSE OP DPO SYNC1 S-CLOSE ARMD	Synchrocheck 1 dead source has operated Synchrocheck 1 dead source has dropped out Synchrocheck 1 in synchronization has operated Synchrocheck 1 in synchronization has dropped out Synchrocheck 1 close has operated Synchrocheck 1 close has dropped out Synchrocheck 1 V1 is above the minimum live voltage Synchrocheck 1 V1 is below the maximum dead voltage Synchrocheck 1 V2 is above the minimum live voltage Synchrocheck 1 V2 is below the maximum dead voltage Synchrocheck 1 S-CLOSE has operated Synchrocheck 1 S-CLOSE has dropped out Synchrocheck 1 S-CLOSE has been armed
	SYNC 2 to 4	Same set of operands as shown for SYNC 1
ELEMENT: Teleprotection channel tests	TELEPRO CH1 FAIL TELEPRO CH2 FAIL TELEPRO CH1 ID FAIL TELEPRO CH2 ID FAIL TELEPRO CH1 CRC FAIL TELEPRO CH2 CRC FAIL TELEPRO CH1 PKT LOST TELEPRO CH2 PKT LOST	Channel 1 failed Channel 2 failed The ID check for a peer relay on channel 1 has failed The ID check for a peer relay on channel 2 has failed CRC detected packet corruption on channel 1 CRC detected packet corruption on channel 2 CRC detected lost packet on channel 1 CRC detected lost packet on channel 2

Operand type	Operand syntax	Operand description
ELEMENT: Teleprotection inputs/outputs	TELEPRO INPUT 1-1 On ↓ TELEPRO INPUT 1-16 On TELEPRO INPUT 2-1 On ↓ TELEPRO INPUT 2-16 On	Flag is set, Logic =1 ↓ Flag is set, Logic =1 Flag is set, Logic =1 ↓ Flag is set, Logic =1
ELEMENT: Thermal overload protection	THERMAL PROT 1 PKP THERMAL PROT 1 OP	Thermal overload protection 1 picked up Thermal overload protection 1 operated
	THERMAL PROT 2	Same set of operands as shown for THERMAL PROT 1
ELEMENT: Trip bus	TRIP BUS 1 PKP TRIP BUS 1 OP	Asserted when the trip bus 1 element picks up Asserted when the trip bus 1 element operates
	TRIP BUS 2 to 6	Same set of operands as shown for TRIP BUS 1
ELEMENT: Underfrequency	UNDERFREQ 1 PKP UNDERFREQ 1 OP UNDERFREQ 1 DPO	Underfrequency 1 has picked up Underfrequency 1 has operated Underfrequency 1 has dropped out
	UNDERFREQ 2 to 6	Same set of operands as shown for UNDERFREQ 1
ELEMENT: Wattmetric zero-sequence directional	WATTMETRIC 1 PKP WATTMETRIC 1 OP	Wattmetric directional element 1 has picked up Wattmetric directional element 1 has operated
	WATTMETRIC 2	Same set of operands as per WATTMETRIC 1
FIXED OPERANDS	Off	Logic = 0. Does nothing and can be used as a delimiter in an equation list; used as 'Disable' by other features.
	On	Logic = 1. Can be used as a test setting.
INPUTS/OUTPUTS: Contact inputs	Cont Ip 1 On Cont Ip 2 On ↓ Cont Ip 1 Off Cont Ip 2 Off ↓ Cont Ip 96 On Cont Ip 96 Off	(does not appear unless ordered) (does not appear unless ordered) ↓ (does not appear unless ordered) (does not appear unless ordered) ↓ (does not appear unless ordered) (does not appear unless ordered)
INPUTS/OUTPUTS: Contact outputs,	Cont Op 1 Closed Cont Op 1 IOn Cont Op 1 VOn Cont Op 1 VOff	Contact output is closed Current is flowing through the contact Voltage exists across the contact (present for contact outputs equipped with monitoring) Voltage exists across the contact (present for contact outputs equipped with monitoring)
	Cont Op 2 to 64	Same set of operands as shown for Cont Op 1
INPUTS/OUTPUTS: Direct inputs	DIRECT INPUT 1 On ↓ DIRECT INPUT 32 On	Flag is set, logic=1 ↓ Flag is set, logic=1
INPUTS/OUTPUTS: RxGOOSE DPS	RxG DPS 1 BAD RxG DPS 1 INTERM RxG DPS 1 OFF RxG DPS 1 ON	Asserted while the RxGOOSE double-point status input is in the bad state Asserted while the RxGOOSE double-point status input is in the intermediate state Asserted while the RxGOOSE double-point status input is off Asserted while the RxGOOSE double-point status input is on
	RxG DPS 2 to 5	Same set of operands as per RxG DPS 1
INPUTS/OUTPUTS: RxGOOSE Booleans	RxG Bool 1 On RxG Bool 2 On RxG Bool 3 On ↓ RxG Bool 128 On	Flag is set, logic=1 Flag is set, logic=1 Flag is set, logic=1 ↓ Flag is set, logic=1
INPUTS/OUTPUTS: Virtual inputs	Virt Ip 1 On Virt Ip 2 On Virt Ip 3 On ↓ Virt Ip 64 On	Flag is set, logic=1 Flag is set, logic=1 Flag is set, logic=1 ↓ Flag is set, logic=1

Operand type	Operand syntax	Operand description
INPUTS/OUTPUTS: Virtual outputs	Virt Op 1 On Virt Op 2 On Virt Op 3 On ↓ Virt Op 96 On	Flag is set, logic=1 Flag is set, logic=1 Flag is set, logic=1 ↓ Flag is set, logic=1
LED INDICATORS: Fixed front panel LEDs	LED IN SERVICE LED TROUBLE LED TEST MODE LED TRIP LED ALARM LED PICKUP LED VOLTAGE LED CURRENT LED FREQUENCY LED OTHER LED PHASE A LED PHASE B LED PHASE C LED NEUTRAL/GROUND	Asserted when the front panel IN SERVICE LED is on Asserted when the front panel TROUBLE LED is on Asserted when the front panel TEST MODE LED is on Asserted when the front panel TRIP LED is on Asserted when the front panel ALARM LED is on Asserted when the front panel PICKUP LED is on Asserted when the front panel VOLTAGE LED is on Asserted when the front panel CURRENT LED is on Asserted when the front panel FREQUENCY LED is on Asserted when the front panel OTHER LED is on Asserted when the front panel PHASE A LED is on Asserted when the front panel PHASE B LED is on Asserted when the front panel PHASE C LED is on Asserted when the front panel NEUTRAL/GROUND LED is on
LED INDICATORS: LED test	LED TEST IN PROGRESS	An LED test has been initiated and has not finished
LED INDICATORS: User-programmable LEDs	LED USER 1	Asserted when user-programmable LED 1 is on
	LED USER 2 to 48	The operand above is available for user-programmable LEDs 2 through 48
PASSWORD SECURITY	ACCESS LOC SETG OFF ACCESS LOC SETG ON ACCESS LOC CMND OFF ACCESS LOC CMND ON ACCESS REM SETG OFF ACCESS REM SETG ON ACCESS REM CMND OFF ACCESS REM CMND ON UNAUTHORIZED ACCESS	Asserted when local setting access is disabled Asserted when local setting access is enabled Asserted when local command access is disabled Asserted when local command access is enabled Asserted when remote setting access is disabled Asserted when remote setting access is enabled Asserted when remote command access is disabled Asserted when remote command access is enabled Asserted when a password entry fails while accessing a password protected level of the F60
RxGOOSE	RxGOOSE 1 On RxGOOSE 2 On RxGOOSE 3 On ↓ RxGOOSE 16 On	Flag is set, logic=1 Flag is set, logic=1 Flag is set, logic=1 ↓ Flag is set, logic=1
	RxGOOSE 1 Off RxGOOSE 2 Off RxGOOSE 3 Off ↓ RxGOOSE 16 Off	Flag is set, logic=1 Flag is set, logic=1 Flag is set, logic=1 ↓ Flag is set, logic=1
RESETTING	RESET OP RESET OP (COMMS) RESET OP (OPERAND) RESET OP (PUSHBUTTON)	Reset command is operated (set by all three operands below) Communications source of the reset command Operand (assigned in the **INPUTS/OUTPUTS ⇨⇩ RESETTING** menu) source of the reset command Reset key (pushbutton) source of the reset command

Operand type	Operand syntax	Operand description
SELF-DIAGNOSTICS (See Relay Self-tests descriptions in Chapter 7: Commands and Targets)	ANY MAJOR ERROR ANY MINOR ERROR ANY SELF-TESTS BATTERY FAIL CLOCK UNSYNCHRONIZED DIRECT DEVICE OFF DIRECT RING BREAK EQUIPMENT MISMATCH FLEXLOGIC ERR TOKEN IRIG-B FAILURE LATCHING OUT ERROR MAINTENANCE ALERT FIRST ETHERNET FAIL PROCESS BUS FAILURE PTP FAILURE RxGOOSE OFF RRTD COMM FAIL SECOND ETHERNET FAIL THIRD ETHERNET FAIL SNTP FAILURE SYSTEM EXCEPTION TEMP MONITOR UNIT NOT PROGRAMMED	Any of the major self-test errors generated (major error) Any of the minor self-test errors generated (minor error) Any self-test errors generated (generic, any error) The battery is not functioning. Replace as outlined in the Maintenance chapter. Relay is not synchronized to the international time standard A direct device is configured but not connected The Direct I/O settings is for a connection that is not in a ring The configuration of modules does not match the stored order code A FlexLogic equation is incorrect "Bad IRIG-B Signal" self-test. See Chapter 7: Commands and Targets. A difference is detected between the desired and actual latch contact state A subset of the minor self-test errors generated, see Chapter 7 Link failure detected. See description in Chapter 7: Commands and Targets. See description in Chapter 7: Commands and Targets "Bad PTP Signal" self-test as described in Chapter 7 One or more GOOSE messages are not being received See description in Chapter 7: Commands and Targets See description in Chapter 7: Commands and Targets See description in Chapter 7: Commands and Targets SNTP server is not responding See description in Chapter 7: Commands and Targets Monitors ambient temperature and maximum operating temperature The product **SETUP > INSTALLATION > RELAYS SETTINGS** setting is not programmed
TEMPERATURE MONITOR	TEMP MONITOR	Asserted while the ambient temperature is greater than the maximum operating temperature (80°C)
USER-PROGRAMMABLE PUSHBUTTONS	PUSHBUTTON 1 ON PUSHBUTTON 1 OFF ANY PB ON	Pushbutton number 1 is in the "On" position Pushbutton number 1 is in the "Off" position Any of 12 pushbuttons is in the "On" position
	PUSHBUTTON 2 to 6, 12, or 16 depending on front panel	Same set of operands as PUSHBUTTON 1

Some operands can be re-named. These are the names of the breakers in the breaker control feature, the ID (identification) of contact inputs and outputs, the ID of virtual inputs, and the ID of virtual outputs. If the user changes the default name or ID of any of these operands, the assigned name appears in the relay list of operands. The default names are shown in the FlexLogic operands table.

The characteristics of the logic gates are tabulated in the following table, and the operators available in FlexLogic are listed in the FlexLogic operators table.

Table 5-25: FlexLogic gate characteristics

Gates	Number of inputs	Output is '1' (= ON) if...
NOT	1	input is '0'
OR	2 to 16	any input is '1'
AND	2 to 16	all inputs are '1'
NOR	2 to 16	all inputs are '0'
NAND	2 to 16	any input is '0'
XOR	2	only one input is '1'

Table 5-26: FlexLogic operators

Type	Syntax	Description	Notes
Editor	INSERT	Insert a parameter in an equation list	
	DELETE	Delete a parameter from an equation list	
End	END	The first END encountered signifies the last entry in the list of processed FlexLogic parameters	
One-shot	POSITIVE ONE SHOT	One shot that responds to a positive going edge	A 'one shot' refers to a single input gate that generates a pulse in response to an edge on the input. The output from a 'one shot' is True (positive) for only one pass through the FlexLogic equation. There is a maximum of 64 'one shots.'
	NEGATIVE ONE SHOT	One shot that responds to a negative going edge	
	DUAL ONE SHOT	One shot that responds to both the positive and negative going edges	
Logic gate	NOT	Logical NOT	Operates on the previous parameter
	OR(2) ↓ OR(16)	2 input OR gate ↓ 16 input OR gate	Operates on the 2 previous parameters ↓ Operates on the 16 previous parameters
	AND(2) ↓ AND(16)	2 input AND gate ↓ 16 input AND gate	Operates on the 2 previous parameters ↓ Operates on the 16 previous parameters
	NOR(2) ↓ NOR(16)	2 input NOR gate ↓ 16 input NOR gate	Operates on the 2 previous parameters ↓ Operates on the 16 previous parameters
	NAND(2) ↓ NAND(16)	2 input NAND gate ↓ 16 input NAND gate	Operates on the 2 previous parameters ↓ Operates on the 16 previous parameters
	XOR(2)	2 input Exclusive OR gate	Operates on the 2 previous parameters
	LATCH (S,R)	Latch (set, reset): reset-dominant	The parameter preceding LATCH(S,R) is the reset input. The parameter preceding the reset input is the set input.
Timer	TIMER 1 ↓ TIMER 32	Timer set with FlexLogic timer 1 settings ↓ Timer set with FlexLogic timer 32 settings	The timer is started by the preceding parameter. The output of the timer is TIMER #.
Assign virtual output	= Virt Op 1 ↓ = Virt Op 96	Assigns previous FlexLogic operand to virtual output 1 ↓ Assigns previous FlexLogic operand to virtual output 96	The virtual output is set by the preceding parameter

5.6.2 FlexLogic rules

When forming a FlexLogic equation, the sequence in the linear array of parameters must follow these general rules:

1. Operands must precede the operator that uses the operands as inputs.
2. Operators have only one output. The output of an operator must be used to create a virtual output if it is to be used as an input to two or more operators.
3. Assigning the output of an operator to a virtual output terminates the equation.
4. A timer operator (for example, "TIMER 1") or virtual output assignment (for example, " = Virt Op 1") can be used once only. If this rule is broken, a syntax error is declared.

5.6.3 FlexLogic evaluation

Each equation is evaluated in the ascending order in which the parameters have been entered.

NOTE

FlexLogic provides built-in latches that by definition have a memory action, remaining in the set state after the set input has been asserted. These built-in latches are reset dominant, meaning that if logical "1" is applied to both set and reset entries simultaneously, then the output of the latch is logical "0." However, they are volatile, meaning that they reset upon removal of control power.

When making changes to FlexLogic entries in the settings, all FlexLogic equations are re-compiled whenever any new FlexLogic entry value is entered, and as a result of the re-compile all latches are reset automatically.

5.6.4 FlexLogic example

This section provides an example of logic implementation for a typical application. The sequence of steps is important to minimize the work to develop the relay settings. Note that the example in the following figure demonstrates the procedure, not to solve a specific application situation.

In the example, it is assumed that logic has already been programmed to produce virtual outputs 1 and 2, and is only a part of the full set of equations used. When using FlexLogic, it is important to make a note of each virtual output used; a virtual output designation (1 to 96) can be assigned only once.

Figure 5-77: Logic example

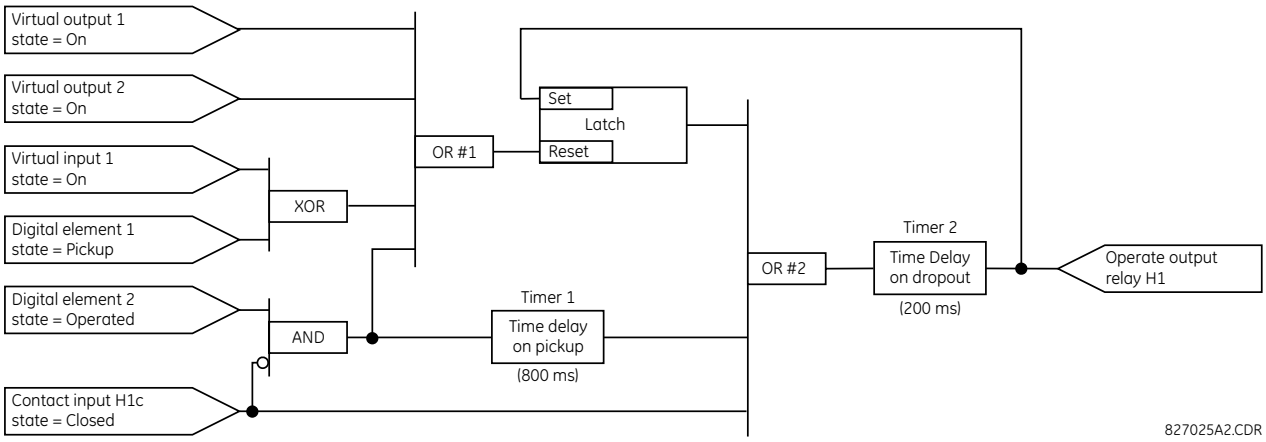

1. Inspect the example logic diagram to determine if the required logic can be implemented with the FlexLogic operators. If this is not possible, the logic must be altered until this condition is satisfied. Once done, count the inputs to each gate to verify that the number of inputs does not exceed the FlexLogic limits, which is unlikely but possible. If the number of inputs is too high, subdivide the inputs into multiple gates to produce an equivalent. For example, if 25 inputs to an AND gate are required, connect Inputs 1 through 16 to AND(16), 17 through 25 to AND(9), and the outputs from these two gates to AND(2).

   Inspect each operator between the initial operands and final virtual outputs to determine if the output from the operator is used as an input to more than one following operator. If so, the operator output must be assigned as a virtual output.

   For the example shown, the output of the AND gate is used as an input to both OR#1 and Timer 1, and must therefore be made a virtual output and assigned the next available number (that is, Virtual Output 3). The final output must also be assigned to a virtual output as virtual output 4, which is programmed in the contact output section to operate relay H1 (that is, contact output H1).

   Therefore, the required logic can be implemented with two FlexLogic equations with outputs of virtual output 3 and virtual output 4, shown as follows.

Figure 5-78: Logic example with virtual outputs

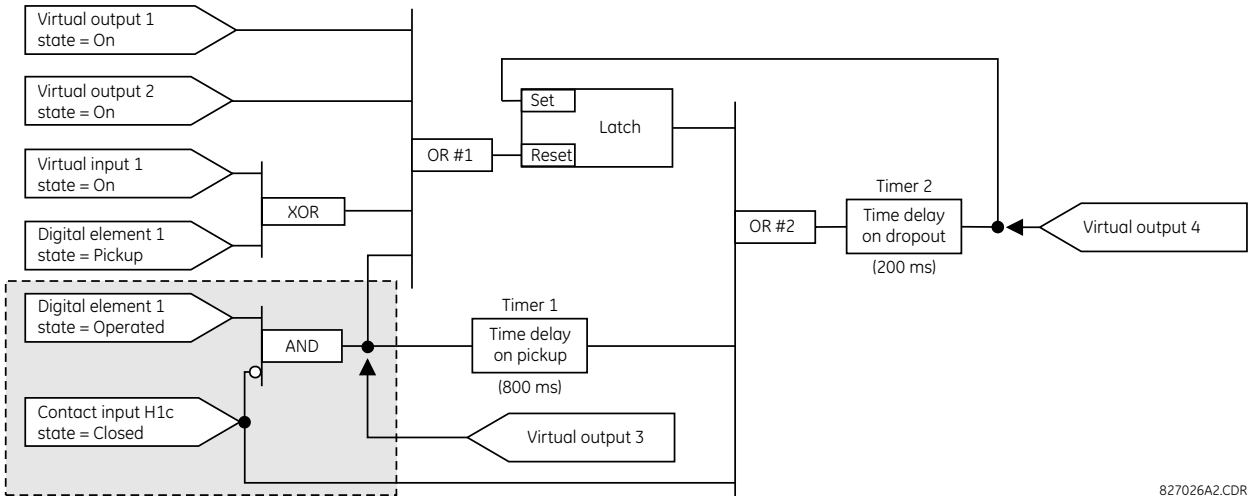

2. Prepare a logic diagram for the equation to produce virtual output 3, as this output is used as an operand in the virtual output 4 equation (create the equation for every output that is used as an operand first, so that when these operands are required they already have been evaluated and assigned to a specific virtual output). The logic for virtual output 3 is shown as follows with the final output assigned.

Figure 5-79: Logic for virtual output 3

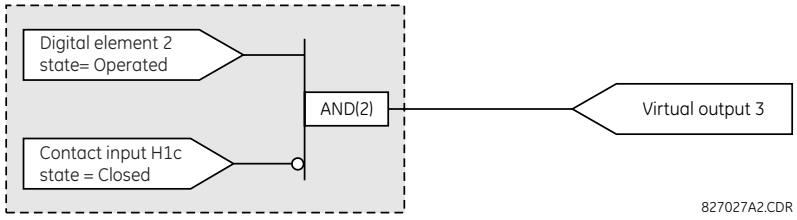

3. Prepare a logic diagram for virtual output 4, replacing the logic ahead of virtual output 3 with a symbol identified as virtual output 3, shown as follows.

Figure 5-80: Logic for virtual output 4

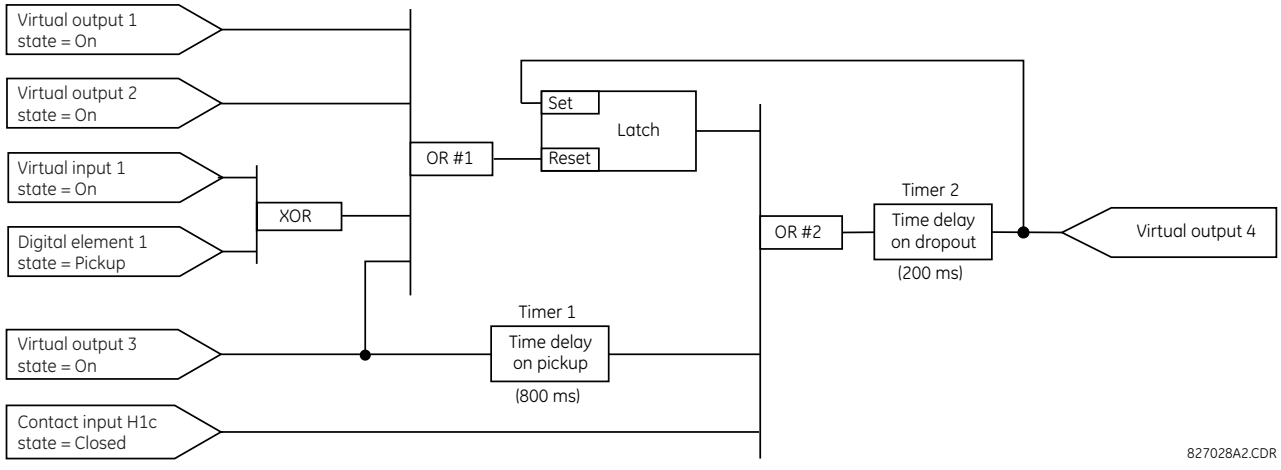

4. Program the FlexLogic equation for virtual output 3 by translating the logic into available FlexLogic parameters. The equation is formed one parameter at a time until the required logic is complete. It is generally easier to start at the output end of the equation and work back towards the input, as shown in the following steps. It is also recommended

to list operator inputs from bottom to top. For demonstration, the final outputs are arbitrarily identified as parameter 99, and each preceding parameter decremented by one in turn. Until accustomed to using FlexLogic, it is suggested that a worksheet with a series of cells marked with the arbitrary parameter numbers be prepared shown as follows.

Figure 5-81: FlexLogic worksheet

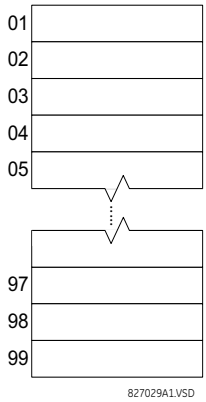

5. Following the procedure outlined, start with parameter 99, as follows:
   - 99: The final output of the equation is virtual output 3, which is created by the operator "= Virt Op n". This parameter is therefore "= Virt Op 3".
   - 98: The gate preceding the output is an AND, which in this case requires two inputs. The operator for this gate is a 2-input AND so the parameter is “AND(2)”. Note that FlexLogic rules require that the number of inputs to most types of operators must be specified to identify the operands for the gate. As the 2-input AND operates on the two operands preceding it, these inputs must be specified, starting with the lower.
   - 97: This lower input to the AND gate must be passed through an inverter (the NOT operator) so the next parameter is “NOT”. The NOT operator acts upon the operand immediately preceding it, so specify the inverter input next.
   - 96: The input to the NOT gate is to be contact input H1c. The ON state of a contact input can be programmed to be set when the contact is either open or closed. Assume for this example that the state is to be ON for a closed contact. The operand is therefore “Cont Ip H1c On”.
   - 95: The last step in the procedure is to specify the upper input to the AND gate, the operated state of digital element 2. This operand is "DIG ELEM 2 OP".

   Writing the parameters in numerical order forms the equation for virtual output 3:

   ```
   [95] DIG ELEM 2 OP
   [96] Cont Ip H1c On
   [97] NOT
   [98] AND(2)
   [99] = Virt Op 3
   ```

   It is now possible to check that this selection of parameters produces the required logic by converting the set of parameters into a logic diagram. The result of this process is shown in the figure, which is compared to the logic for virtual output 3 diagram as a check.

Figure 5-82: FlexLogic equation for virtual output 3

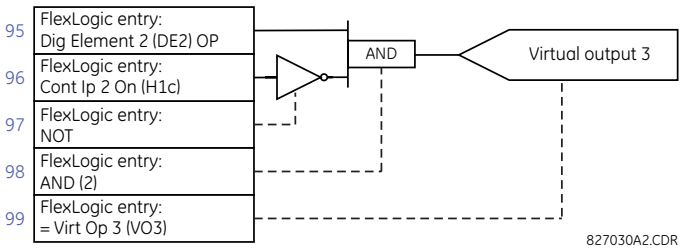

6. Repeating the process described for virtual output 3, select the FlexLogic parameters for Virtual Output 4.
   - 99: The final output of the equation is virtual output 4, which is parameter "= Virt Op 4".
   - 98: The operator preceding the output is timer 2, which is operand "TIMER 2". Note that the settings required for the timer are established in the timer programming section.
   - 97: The operator preceding timer 2 is OR #2, a 3-input OR, which is parameter "OR(3)".
   - 96: The lowest input to OR #2 is operand "Cont Ip H1c On".
   - 95: The center input to OR #2 is operand "TIMER 1".
   - 94: The input to timer 1 is operand "Virt Op 3 On".
   - 93: The upper input to OR #2 is operand "LATCH (S,R)".
   - 92: There are two inputs to a latch, and the input immediately preceding the latch reset is OR #1, a 4-input OR, which is parameter "OR(4)".
   - 91: The lowest input to OR #1 is operand "Virt Op 3 On".
   - 90: The input just above the lowest input to OR #1 is operand "XOR(2)".
   - 89: The lower input to the XOR is operand "DIG ELEM 1 PKP".
   - 88: The upper input to the XOR is operand "Virt Ip 1 On".
   - 87: The input just below the upper input to OR #1 is operand "Virt Op 2 On".
   - 86: The upper input to OR #1 is operand "Virt Op 1 On".
   - 85: The last parameter is used to set the latch, and is operand "Virt Op 4 On".

   The equation for virtual output 4 is:

```
[85] Virt Op 4 On
[86] Virt Op 1 On
[87] Virt Op 2 On
[88] Virt Ip 1 On
[89] DIG ELEM 1 PKP
[90] XOR(2)
[91] Virt Op 3 On
[92] OR(4)
[93] LATCH (S,R)
[94] Virt Op 3 On
[95] TIMER 1
[96] Cont Ip H1c On
[97] OR(3)
[98] TIMER 2
[99] = Virt Op 4
```

   Now check that the selection of parameters produce the required logic by converting the set of parameters into a logic diagram. The result is shown in the figure, which is compared to the logic for virtual output 4 diagram as a check.

Figure 5-83: FlexLogic equation for virtual output 4

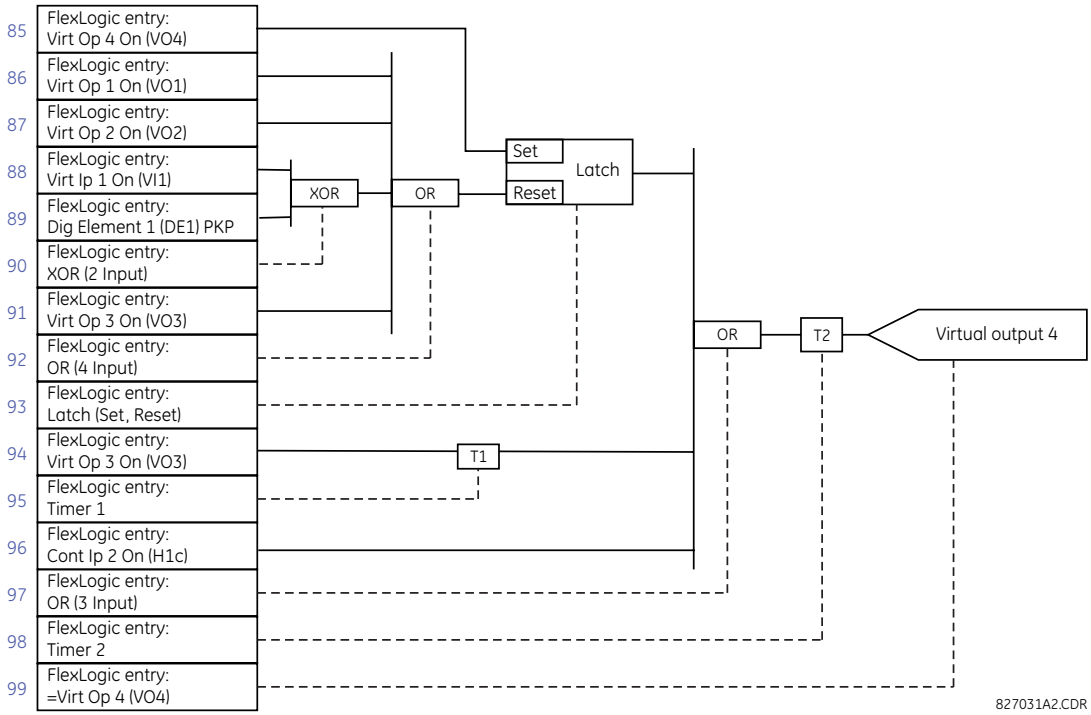

7. Now write the complete FlexLogic expression required to implement the logic, making an effort to assemble the equation in an order where Virtual Outputs that are used as inputs to operators are created before needed. In cases where a lot of processing is required to perform logic, this can be difficult to achieve, but in most cases does not cause problems as all logic is calculated at least four times per power frequency cycle. The possibility of a problem caused by sequential processing emphasizes the necessity to test the performance of FlexLogic before it is placed in service.

   In the following equation, virtual output 3 is used as an input to both latch 1 and timer 1 as arranged in the following order:

```
DIG ELEM 2 OP
Cont Ip H1c On
NOT
AND(2)
= Virt Op 3
Virt Op 4 On
Virt Op 1 On
Virt Op 2 On
Virt Ip 1 On
DIG ELEM 1 PKP
XOR(2)
Virt Op 3 On
OR(4)
LATCH (S,R)
Virt Op 3 On
TIMER 1
Cont Ip H1c On
OR(3)
TIMER 2
= Virt Op 4
END
```

   In this expression, the virtual output 4 input to the four-input OR is listed before it is created. This is typical of a form of feedback, in this case, used to create a seal-in effect with the latch, and is correct.

8. Always test the logic after it is loaded into the relay, in the same way as has been used in the past. Testing can be

simplified by placing an "END" operator within the overall set of FlexLogic equations. The equations are evaluated up to the first "END" operator.

The "On" and "Off" operands can be placed in an equation to establish a known set of conditions for test purposes, and the "INSERT" and "DELETE" commands can be used to modify equations.

5.6.5 FlexLogic equation editor

SETTINGS ⇨⇩ FLEXLOGIC ⇨ FLEXLOGIC EQUATION EDITOR

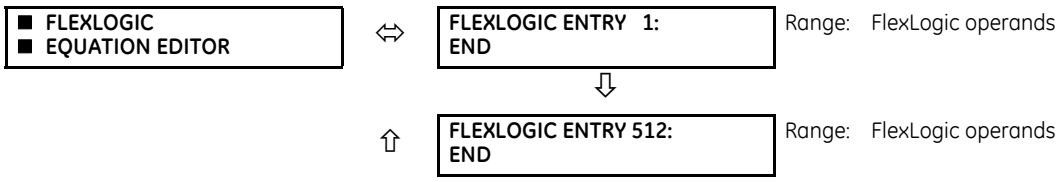

There are 512 FlexLogic entries available, numbered from 1 to 512, with default END entry settings. If a "Disabled" element is selected as a FlexLogic entry, the associated state flag is never set to '1'. Press the **+/–** key when editing FlexLogic equations to quickly scan through the major parameter types.

5.6.6 FlexLogic timers

SETTINGS ⇨⇩ FLEXLOGIC ⇨⇩ FLEXLOGIC TIMERS ⇨ FLEXLOGIC TIMER 1(32)

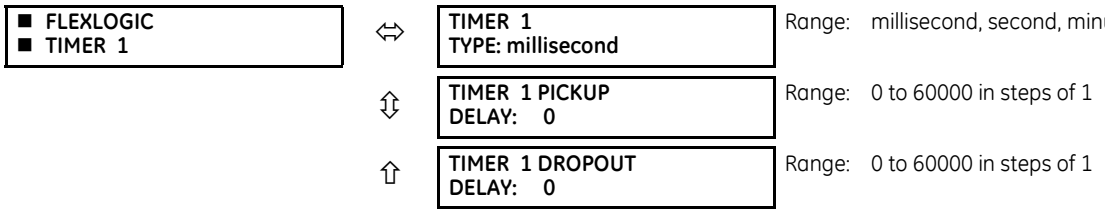

There are 32 identical FlexLogic timers available. These timers are used as operators for FlexLogic equations.

TIMER 1 TYPE — Selects the time measurement unit.

TIMER 1 PICKUP DELAY — Sets the time delay to pickup. If a pickup delay is not required, set this function to "0."

TIMER 1 DROPOUT DELAY — Sets the time delay to dropout. If a dropout delay is not required, set this function to "0."

5.6.7 FlexElements

SETTINGS ⇨⇩ FLEXLOGIC ⇨⇩ FLEXELEMENTS ⇨ FLEXELEMENT 1(8)

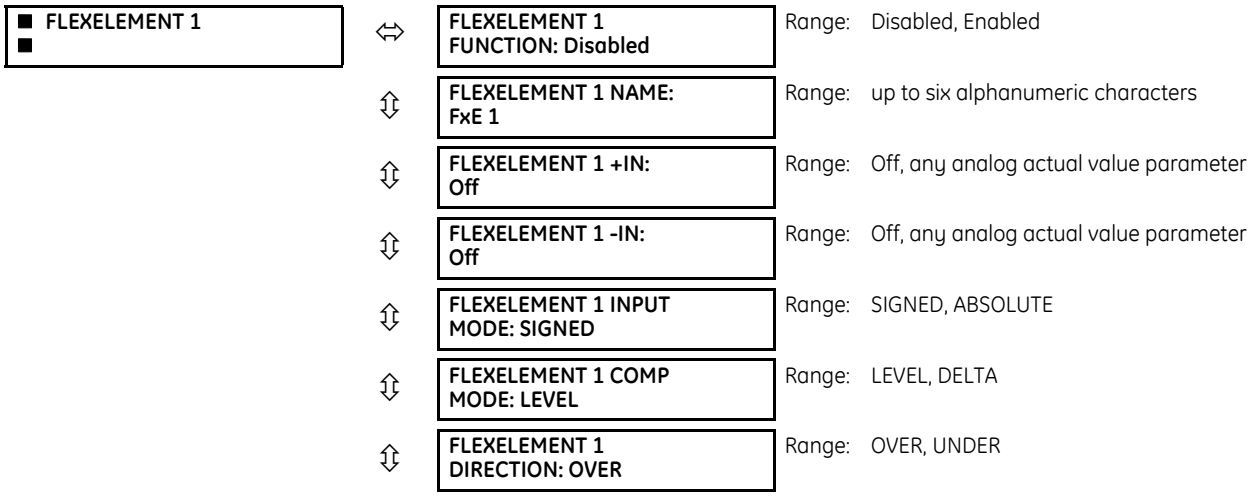

⇳	**FLEXELEMENT 1 PICKUP: 1.000 pu**	Range: –90.000 to 90.000 pu in steps of 0.001
⇳	**FLEXELEMENT 1 HYSTERESIS: 3.0%**	Range: 0.1 to 50.0% in steps of 0.1
⇳	**FLEXELEMENT 1 dt UNIT: Milliseconds**	Range: Milliseconds, Seconds, Minutes
⇳	**FLEXELEMENT 1 dt: 20**	Range: 20 to 86400 in steps of 1
⇳	**FLEXELEMENT 1 PKP DELAY: 0.000 s**	Range: 0.000 to 65.535 s in steps of 0.001
⇳	**FLEXELEMENT 1 RST DELAY: 0.000 s**	Range: 0.000 to 65.535 s in steps of 0.001
⇳	**FLEXELEMENT 1 BLK: Off**	Range: FlexLogic operand
⇳	**FLEXELEMENT 1 TARGET: Self-reset**	Range: Self-reset, Disabled, Latched
⇳	**FLEXELEMENT 1 EVENTS: Disabled**	Range: Disabled, Enabled

A FlexElement is a universal comparator used to monitor any analog actual value calculated by the relay or a net difference of any two analog actual values of the same type. The effective operating signal can be treated as a signed number or its absolute value can be used.

FlexElements run every half power cycle (every four protection passes).

The element can be programmed to respond either to a signal level or to a rate-of-change (delta) over a pre-defined period of time. The output operand is asserted when the operating signal is higher than a threshold or lower than a threshold, as per your choice.

Figure 5-84: FlexElement logic

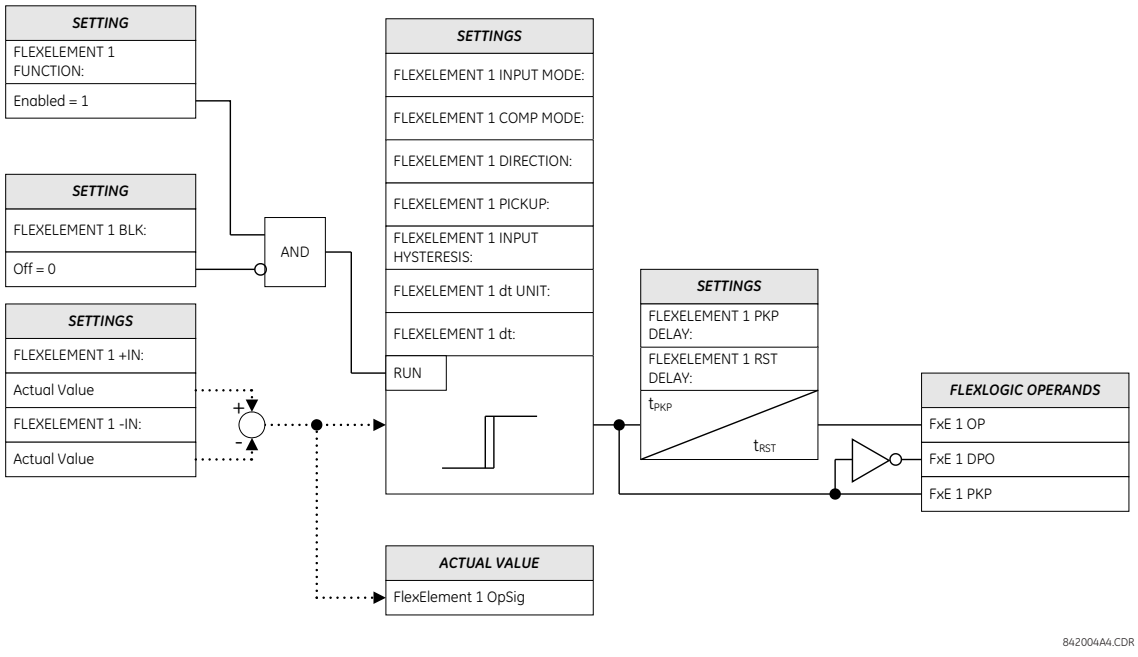

FLEXELEMENT 1 +IN — This setting specifies the first (non-inverted) input to the FlexElement. Zero is assumed as the input if this setting is set to "Off." For proper operation of the element, at least one input must be selected. Otherwise, the element does not assert its output operands.

FLEXELEMENT 1 –IN — Specifies the second (inverted) input to the FlexElement. Zero is assumed as the input if this setting is set to "Off." For proper operation of the element, at least one input must be selected. Otherwise, the element does not assert its output operands. This input is used to invert the signal if needed for convenience, or to make the element respond to a differential signal, such as for a top-bottom oil temperature differential alarm. The element does not operate if the two input signals are of different types, for example if one tries to use active power and phase angle to build the effective operating signal.

The element responds directly to the differential signal if the **FLEXELEMENT 1 INPUT MODE** setting is set to "Signed" The element responds to the absolute value of the differential signal if this setting is set to "Absolute." Sample applications for the "Absolute" setting include monitoring the angular difference between two phasors with a symmetrical limit angle in both directions, monitoring power regardless of its direction, or monitoring a trend.

The element responds directly to its operating signal—as defined by the **FLEXELEMENT 1 +IN**, **FLEXELEMENT 1 –IN** and **FLEXELEMENT 1 INPUT MODE** settings—if the **FLEXELEMENT 1 COMP MODE** setting is set to "Level." The element responds to the rate of change of its operating signal if the **FLEXELEMENT 1 COMP MODE** setting is set to "Delta." In this case, the **FLEXELEMENT 1 dt UNIT** and **FLEXELEMENT 1 dt** settings specify how the rate of change is derived.

FLEXELEMENT 1 DIRECTION — Enables the relay to respond to either high or low values of the operating signal. The following figure explains the application of the **FLEXELEMENT 1 DIRECTION**, **FLEXELEMENT 1 PICKUP**, and **FLEXELEMENT 1 HYSTERESIS** settings.

Figure 5-85: FlexElement direction, pickup, and hysteresis

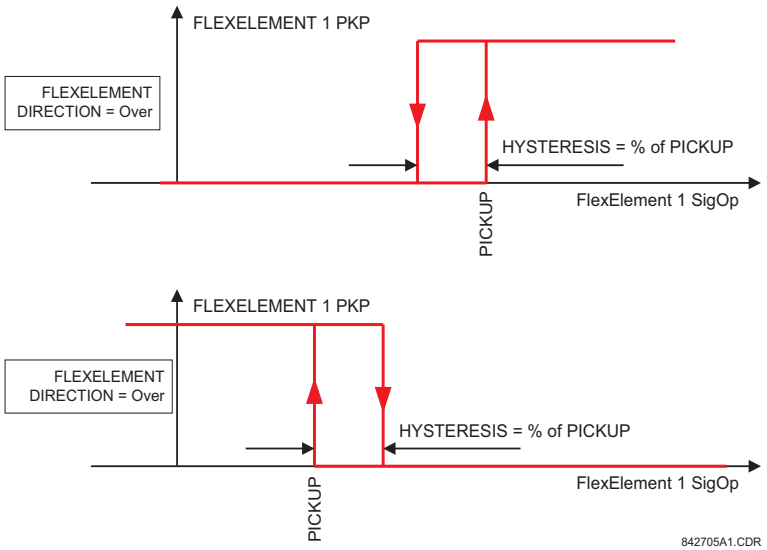

In conjunction with the **FLEXELEMENT 1 INPUT MODE** setting, the element can be programmed to provide two extra characteristics, as shown in the following figure.

Figure 5-86: FlexElement input mode setting

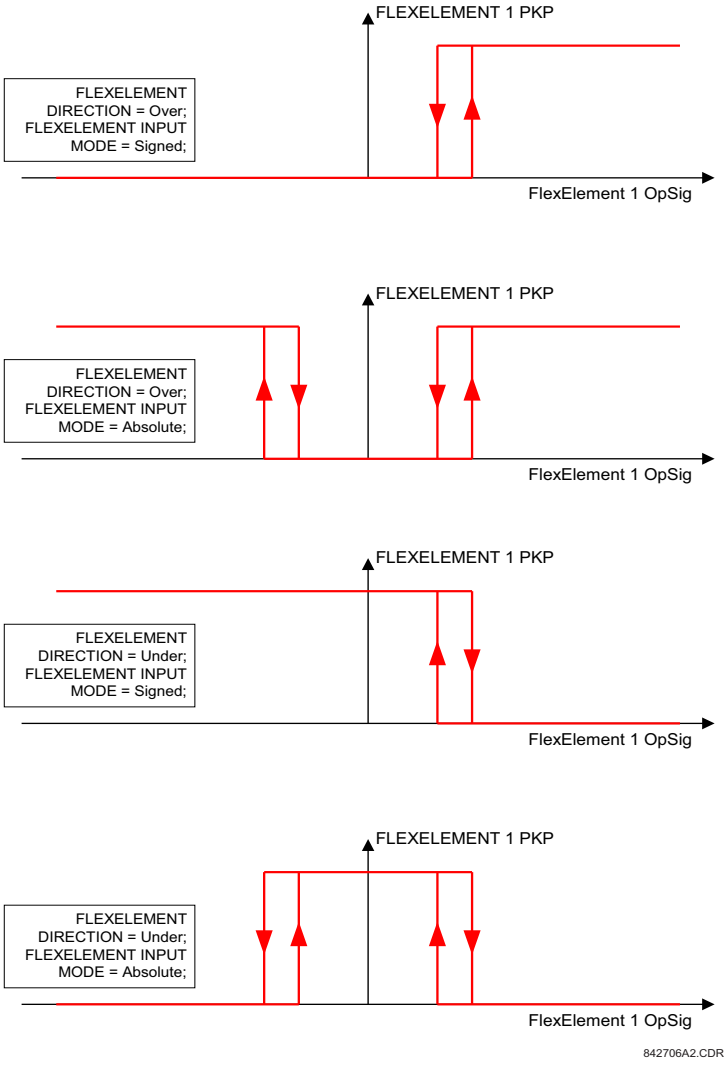

FLEXELEMENT 1 PICKUP — This setting specifies the operating threshold for the effective operating signal of the element. If set to "Over," the element picks up when the operating signal exceeds the **FLEXELEMENT 1 PICKUP** value. If set to "Under," the element picks up when the operating signal falls below the **FLEXELEMENT 1 PICKUP** value.

When using FlexElements for Voltage Elements, 1 pu is always equal to phase to ground voltage nominal secondary voltage, even if you select a phase to phase voltage as an operating quantity.

FLEXELEMENT 1 HYSTERESIS — This setting controls the element dropout. Notice that both the operating signal and the pickup threshold can be negative, facilitating applications such as reverse power alarm protection. The FlexElement can be programmed to work with all analog actual values measured by the relay. The **FLEXELEMENT 1 PICKUP** setting is entered in per-unit values using the following definitions of the base units.

Table 5-27: FlexElement base units

Unit	Description
BREAKER ACC ARCING AMPS (Brk X Acc Arc Amp A, B, and C)	BASE = 2000 $kA^2 \times$ cycle
BREAKER ARCING AMPS (Brk X Arc Amp A, B, and C)	BASE = 1 $kA^2 \times$ cycle

Unit	Description
DCmA	BASE = maximum value of the **DCMA INPUT MAX** setting for the two transducers configured under the +IN and –IN inputs
DELTA TIME	BASE = 1 µs
FAULT LOCATION	BASE = Line Length as specified in Fault Report
FREQUENCY	f_{BASE} = 1 Hz
FREQUENCY RATE OF CHANGE	df/dt_{BASE} = 1 Hz/s
PHASE ANGLE	φ_{BASE} = 360 degrees (see the UR angle referencing convention)
POWER FACTOR	PF_{BASE} = 1.00
RTDs	BASE = 100°C
SENSITIVE DIR POWER (Sns Dir Power)	P_{BASE} = maximum value of $3 \times V_{BASE} \times I_{BASE}$ for the +IN and –IN inputs of the sources configured for the sensitive power directional element(s).
SOURCE CURRENT	I_{BASE} = maximum nominal primary RMS value of the +IN and –IN inputs
SOURCE ENERGY (Positive and Negative Watthours, Positive and Negative Varhours)	E_{BASE} = 10000 MWh or MVAh, respectively
SOURCE POWER	P_{BASE} = maximum value of $V_{BASE} \times I_{BASE}$ for the +IN and –IN inputs
SOURCE THD & HARMONICS	BASE = 1%
SOURCE VOLTAGE	V_{BASE} = maximum nominal primary RMS value of the +IN and –IN inputs
SYNCHROCHECK (Max Delta Volts)	V_{BASE} = maximum primary RMS value of all the sources related to the +IN and –IN inputs

FLEXELEMENT 1 HYSTERESIS — This setting defines the pickup–dropout relation of the element by specifying the width of the hysteresis loop as a percentage of the pickup value as shown in the FlexElement Direction, Pickup, and Hysteresis diagram.

FLEXELEMENT 1 dt UNIT — Specifies the time unit for the setting **FLEXELEMENT 1 dt**. This setting is applicable only if **FLEXELEMENT 1 COMP MODE** is set to "Delta."

FLEXELEMENT 1 dt — Specifies duration of the time interval for the rate of change mode of operation. This setting is applicable only if **FLEXELEMENT 1 COMP MODE** is set to "Delta."

FLEXELEMENT 1 PKP DELAY — Specifies the pickup delay of the element.

FLEXELEMENT 1 RST DELAY — Specifies the reset delay of the element.

5.6.8 Non-volatile latches

SETTINGS ⇨⇩ FLEXLOGIC ⇨⇩ NON-VOLATILE LATCHES ⇨ LATCH 1(16)

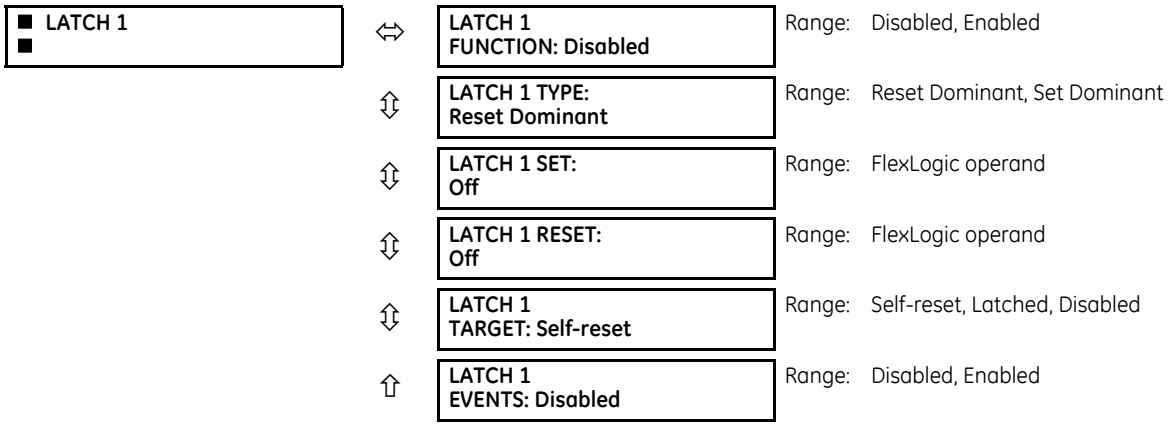

The non-volatile latches provide a permanent logical flag that is stored safely and do not reset upon restart after the relay is powered down. Typical applications include sustaining operator commands or permanently blocking relay functions, such as Autorecloser, until a deliberate interface action resets the latch.

LATCH 1 TYPE — This setting characterizes Latch 1 to be Set- or Reset-dominant.

LATCH 1 SET — If asserted, the specified FlexLogic operands 'sets' Latch 1.

LATCH 1 RESET — If asserted, the specified FlexLogic operand 'resets' Latch 1.

Figure 5-87: Non-volatile latch operation table (N = 1 to 16) and logic

Latch n type	Latch n set	Latch n reset	Latch n on	Latch n off
Reset Dominant	ON	OFF	ON	OFF
	OFF	OFF	Previous State	Previous State
	ON	ON	OFF	ON
	OFF	ON	OFF	ON
Set Dominant	ON	OFF	ON	OFF
	ON	ON	ON	OFF
	OFF	OFF	Previous State	Previous State
	OFF	ON	OFF	ON

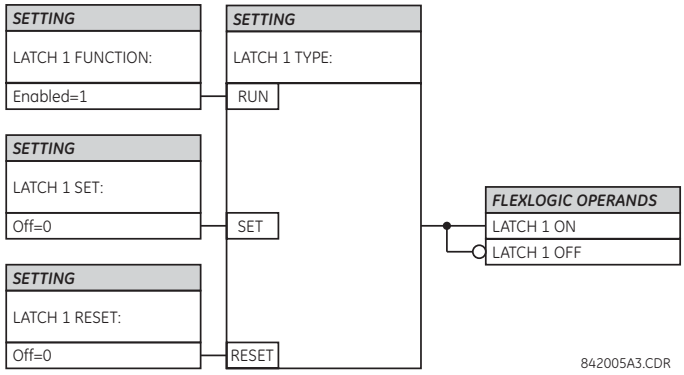

5.7 Grouped elements

5.7.1 Overview

Each protection element can be assigned up to six sets of settings with designations 1 to 6. The performance of these elements is defined by the active setting group at a given time. Multiple setting groups allow the user to conveniently change protection settings for different operating situations (for example, altered power system configuration or season of the year). The active setting group can be preset or selected in the **SETTING GROUPS** menu (see the Control Elements section later in this chapter). See also the Introduction to Elements section at the beginning of this chapter.

5.7.2 Setting group 1

SETTINGS ⇨⇩ GROUPED ELEMENTS ⇨ SETTING GROUP 1(6)

■ SETTING GROUP 1 ■	⇔	■ LOAD ENCROACHMENT ■ — See below
	⇳	■ PHASE CURRENT ■ — See page 5-184
	⇳	■ NEUTRAL CURRENT ■ — See page 5-195
	⇳	■ WATTMETRIC GROUND FAULT — See page 5-203
	⇳	■ GROUND CURRENT ■ — See page 5-207
	⇳	■ NEGATIVE SEQUENCE CURRENT — See page 5-217
	⇳	■ BREAKER FAILURE ■ — See page 5-223
	⇳	■ VOLTAGE ELEMENTS ■ — See page 5-232
	⇧	■ POWER ■ — See page 5-239

Each of the six setting group menus is identical. Setting group 1 (the default active group) is active automatically when no other group is active.

If the device incorrectly switches to group 1 after power cycling, upgrade the firmware to version 7.31 or later to correct this issue.

5.7.3 Load encroachment

SETTINGS ⇨⇩ GROUPED ELEMENTS ⇨ SETTING GROUP 1(6) ⇨⇩ LOAD ENCROACHMENT

■ LOAD ENCROACHMENT ■	⇔	**LOAD ENCROACHMENT FUNCTION: Disabled**	Range: Disabled, Enabled
	⇩	**LOAD ENCROACHMENT SOURCE: SRC 1**	Range: SRC 1, SRC 2, SRC 3, SRC 4
	⇩	**LOAD ENCROACHMENT MIN VOLT: 0.250 pu**	Range: 0.000 to 3.000 pu in steps of 0.001
	⇩	**LOAD ENCROACHMENT REACH: 1.00 Ω**	Range: 0.02 to 250.00 ohms in steps of 0.01
	⇩	**LOAD ENCROACHMENT ANGLE: 30°**	Range: 5 to 50° in steps of 1
	⇩	**LOAD ENCROACHMENT PKP DELAY: 0.000 s**	Range: 0.000 to 65.535 s in steps of 0.001
	⇩	**LOAD ENCROACHMENT RST DELAY: 0.000 s**	Range: 0.000 to 65.535 s in steps of 0.001
	⇩	**LOAD ENCRMNT BLK: Off**	Range: FlexLogic operand
	⇩	**LOAD ENCROACHMENT TARGET: Self-reset**	Range: Self-reset, Latched, Disabled
	⇩	**LOAD ENCROACHMENT EVENTS: Disabled**	Range: Disabled, Enabled

The load encroachment element responds to the positive-sequence voltage and current and applies a characteristic as shown in the figure.

Figure 5-88: Load encroachment characteristic

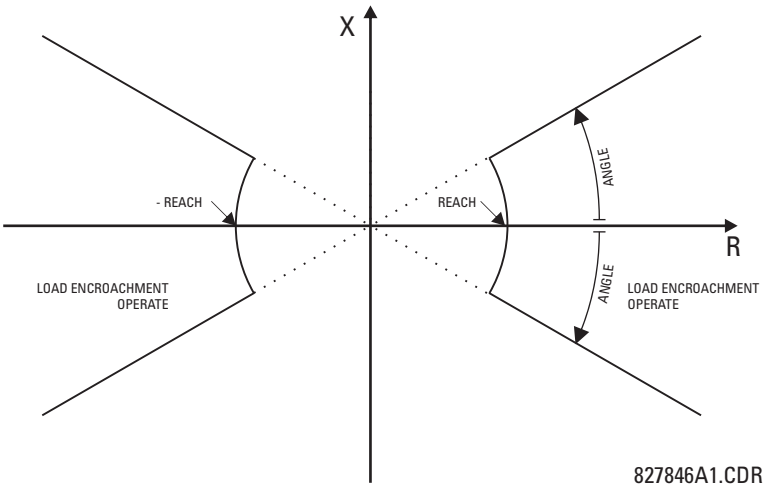

The element operates if the positive-sequence voltage is above a settable level and asserts its output signal that can be used to block selected protection elements, such as distance or phase overcurrent. The following figure shows an effect of the load encroachment characteristics used to block the quadrilateral distance element.

Figure 5-89: Load encroachment applied to distance element

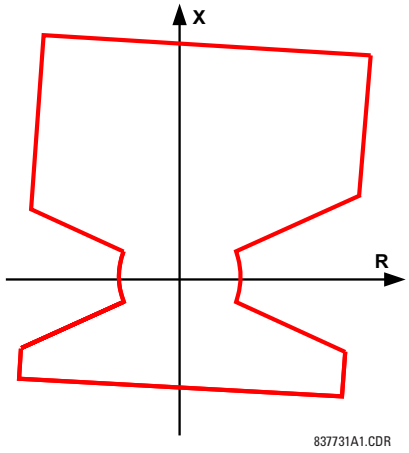

LOAD ENCROACHMENT MIN VOLT — This setting specifies the minimum positive-sequence voltage required for operation of the element. When the voltage is below this threshold, a blocking signal is not asserted by the element. When selecting this setting, remember that the F60 measures the phase-to-ground sequence voltages regardless of the VT connection.

The nominal VT secondary voltage as specified with the **SYSTEM SETUP ⇨⇩ AC INPUTS ⇨ VOLTAGE BANK X5 ⇨⇩ PHASE VT SECONDARY** setting is the per-unit base for this setting.

LOAD ENCROACHMENT REACH — This setting specifies the resistive reach of the element as shown in the Load Encroachment Characteristic diagram. Enter this setting in secondary ohms and calculate it as the positive-sequence resistance seen by the relay under maximum load conditions and unity power factor.

LOAD ENCROACHMENT ANGLE — This setting specifies the size of the blocking region as shown on the Load Encroachment Characteristic diagram and applies to the positive-sequence impedance.

Figure 5-90: Load encroachment logic

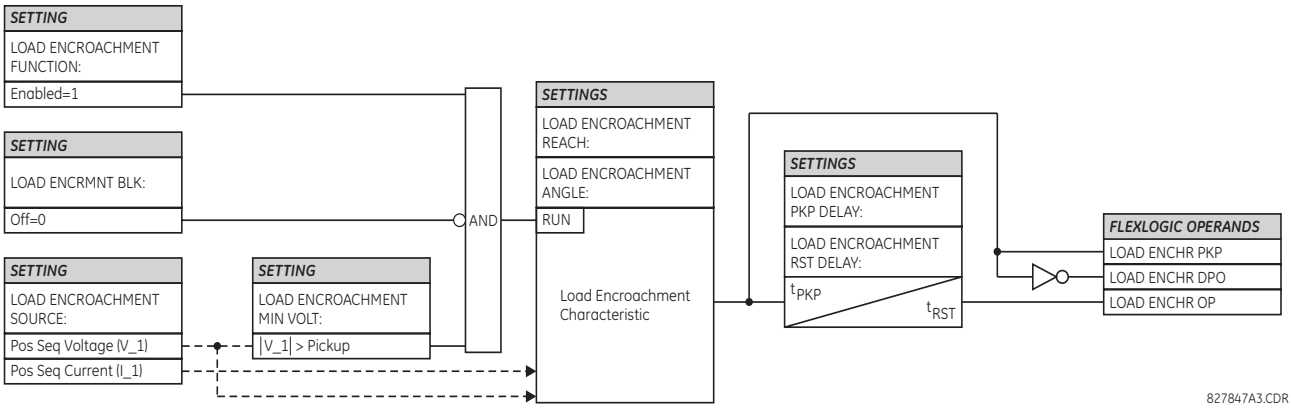

5.7.4 Phase current

5.7.4.1 Menu

SETTINGS ⇨⇩ GROUPED ELEMENTS ⇨ SETTING GROUP 1(6) ⇨⇩ PHASE CURRENT

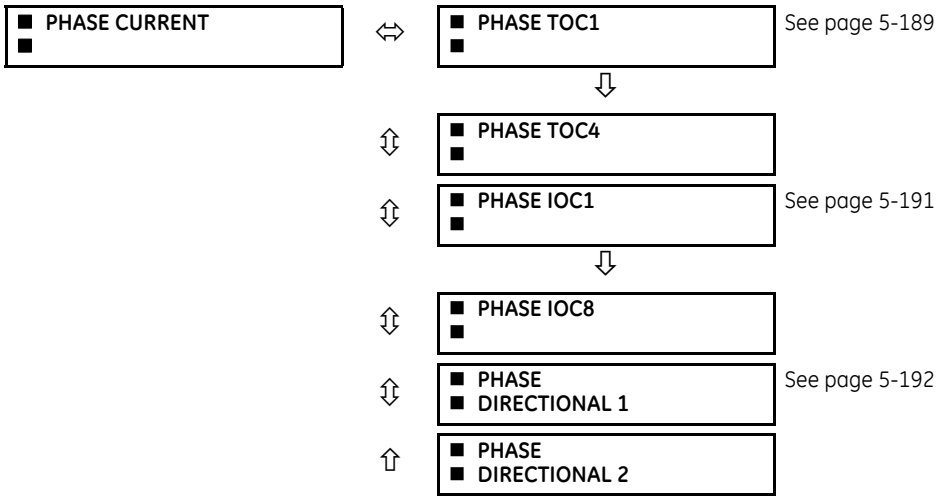

5.7.4.2 Inverse TOC curve characteristics

The inverse time overcurrent curves used by the time overcurrent elements are the IEEE, IEC, GE Type IAC, and I^2t standard curve shapes. This allows for simplified coordination with downstream devices.

If none of these curve shapes is adequate, FlexCurves can be used to customize the inverse time curve characteristics. The definite time curve is also an option that can be appropriate if only simple protection is required.

Table 5-28: Overcurrent curve types

IEEE	IEC	GE type IAC	Other
IEEE Extremely Inverse	IEC Curve A (BS142)	IAC Extremely Inverse	I^2t
IEEE Very Inverse	IEC Curve B (BS142)	IAC Very Inverse	FlexCurves A, B, C, and D
IEEE Moderately Inverse	IEC Curve C (BS142)	IAC Inverse	Recloser Curves
	IEC Short Inverse	IAC Short Inverse	Definite Time

A time dial multiplier setting allows selection of a multiple of the base curve shape (where the time dial multiplier = 1) with the curve shape (**CURVE**) setting. Unlike the electromechanical time dial equivalent, operate times are directly proportional to the time multiplier (**TD MULTIPLIER**) setting value. For example, all times for a multiplier of 10 are 10 times the multiplier 1 or base curve values. Setting the multiplier to zero results in an instantaneous response to all current levels above pickup.

Time overcurrent time calculations are made with an internal *energy capacity* memory variable. When this variable indicates that the energy capacity has reached 100%, a time overcurrent element operates. If less than 100% energy capacity is accumulated in this variable and the current falls below the dropout threshold of 97 to 98% of the pickup value, the variable must be reduced. Two methods of this resetting operation are available: “Instantaneous” and “Timed.” The “Instantaneous” selection is intended for applications with other relays, such as most static relays, which set the energy capacity directly to zero when the current falls below the reset threshold. The “Timed” selection can be used where the relay must coordinate with electromechanical relays.

The URs calculate operate time corresponding to the values in the range of 1.03 to 20 multiples of the pickup current. Above 20 multiples of the pickup current, URs clamp the operate time to the value at a multiple of 20, resulting in the flat part of the characteristics. Reset time is calculated in the range of 0 to 0.97 multiples of the pickup current.

IEEE curves

The IEEE time overcurrent curve shapes conform to industry standards and the IEEE C37.112-1996 curve classifications for extremely, very, and moderately inverse curves. The IEEE curves are derived from the operate and reset time equations.

$$T = TDM \times \left[\frac{A}{\left(\frac{I}{I_{pickup}} \right)^{p} - 1} + B \right], \; T_{RESET} = TDM \times \left[\frac{t_r}{1 - \left(\frac{I}{I_{pickup}} \right)^{2}} \right] \qquad \textbf{Eq. 5-9}$$

where

T = operate time (in seconds)
TDM = Multiplier setting
I = input current
I_{pickup} = Pickup Current setting
A, B, p = constants defined in the table
T_{RESET} = reset time in seconds (assuming energy capacity is 100% and RESET is "Timed")
t_r = characteristic constant defined in the table

Table 5-29: IEEE inverse time curve constants

IEEE curve shape	A	B	p	t_r
IEEE Extremely Inverse	28.2	0.1217	2.0000	29.1
IEEE Very Inverse	19.61	0.491	2.0000	21.6
IEEE Moderately Inverse	0.0515	0.1140	0.02000	4.85

Table 5-30: IEEE curve trip times (in seconds)

Multiplier (TDM)	Current (I / I_{pickup})									
	1.5	2.0	3.0	4.0	5.0	6.0	7.0	8.0	9.0	10.0
IEEE Extremely Inverse										
0.5	11.341	4.761	1.823	1.001	0.648	0.464	0.355	0.285	0.237	0.203
1.0	22.682	9.522	3.647	2.002	1.297	0.927	0.709	0.569	0.474	0.407
2.0	45.363	19.043	7.293	4.003	2.593	1.855	1.418	1.139	0.948	0.813
4.0	90.727	38.087	14.587	8.007	5.187	3.710	2.837	2.277	1.897	1.626
6.0	136.090	57.130	21.880	12.010	7.780	5.564	4.255	3.416	2.845	2.439
8.0	181.454	76.174	29.174	16.014	10.374	7.419	5.674	4.555	3.794	3.252
10.0	226.817	95.217	36.467	20.017	12.967	9.274	7.092	5.693	4.742	4.065
IEEE Very Inverse										
0.5	8.090	3.514	1.471	0.899	0.654	0.526	0.450	0.401	0.368	0.345
1.0	16.179	7.028	2.942	1.798	1.308	1.051	0.900	0.802	0.736	0.689
2.0	32.358	14.055	5.885	3.597	2.616	2.103	1.799	1.605	1.472	1.378
4.0	64.716	28.111	11.769	7.193	5.232	4.205	3.598	3.209	2.945	2.756
6.0	97.074	42.166	17.654	10.790	7.849	6.308	5.397	4.814	4.417	4.134
8.0	129.432	56.221	23.538	14.387	10.465	8.410	7.196	6.418	5.889	5.513
10.0	161.790	70.277	29.423	17.983	13.081	10.513	8.995	8.023	7.361	6.891
IEEE Moderately Inverse										
0.5	3.220	1.902	1.216	0.973	0.844	0.763	0.706	0.663	0.630	0.603
1.0	6.439	3.803	2.432	1.946	1.688	1.526	1.412	1.327	1.260	1.207
2.0	12.878	7.606	4.864	3.892	3.377	3.051	2.823	2.653	2.521	2.414
4.0	25.756	15.213	9.729	7.783	6.753	6.102	5.647	5.307	5.041	4.827
6.0	38.634	22.819	14.593	11.675	10.130	9.153	8.470	7.960	7.562	7.241
8.0	51.512	30.426	19.458	15.567	13.507	12.204	11.294	10.614	10.083	9.654

Multiplier (TDM)	Current (I / I_{pickup})									
	1.5	2.0	3.0	4.0	5.0	6.0	7.0	8.0	9.0	10.0
10.0	64.390	38.032	24.322	19.458	16.883	15.255	14.117	13.267	12.604	12.068

IEC curves

For European applications, the relay offers three standard curves defined in IEC 255-4 and British standard BS142. These are defined as IEC Curve A, IEC Curve B, and IEC Curve C. The IEC curves are derived by the operate and reset time equations.

$$T = TDM \times \left[\frac{K}{(I/I_{pickup})^{E} - 1}\right], \quad T_{RESET} = TDM \times \left[\frac{t_r}{1-(I/I_{pickup})^{2}}\right] \qquad \textbf{Eq. 5-10}$$

where

T = operate time (in seconds)
TDM = Multiplier setting
I = input current
I_{pickup} = Pickup Current setting
K, E = constants defined in the table
t_r = characteristic constant defined in the table
T_{RESET} = reset time in seconds (assuming energy capacity is 100% and **RESET** is "Timed")

Table 5-31: IEC (BS) inverse time curve constants

IEC (BS) curve shape	K	E	t_r
IEC Curve A (BS142)	0.140	0.020	9.7
IEC Curve B (BS142)	13.500	1.000	43.2
IEC Curve C (BS142)	80.000	2.000	58.2
IEC Short Inverse	0.050	0.040	0.500

Table 5-32: IEC curve trip times (in seconds)

Multiplier (TDM)	Current (I / I_{pickup})									
	1.5	2.0	3.0	4.0	5.0	6.0	7.0	8.0	9.0	10.0
IEC Curve A										
0.05	0.860	0.501	0.315	0.249	0.214	0.192	0.176	0.165	0.156	0.149
0.10	1.719	1.003	0.630	0.498	0.428	0.384	0.353	0.330	0.312	0.297
0.20	3.439	2.006	1.260	0.996	0.856	0.767	0.706	0.659	0.623	0.594
0.40	6.878	4.012	2.521	1.992	1.712	1.535	1.411	1.319	1.247	1.188
0.60	10.317	6.017	3.781	2.988	2.568	2.302	2.117	1.978	1.870	1.782
0.80	13.755	8.023	5.042	3.984	3.424	3.070	2.822	2.637	2.493	2.376
1.00	17.194	10.029	6.302	4.980	4.280	3.837	3.528	3.297	3.116	2.971
IEC Curve B										
0.05	1.350	0.675	0.338	0.225	0.169	0.135	0.113	0.096	0.084	0.075
0.10	2.700	1.350	0.675	0.450	0.338	0.270	0.225	0.193	0.169	0.150
0.20	5.400	2.700	1.350	0.900	0.675	0.540	0.450	0.386	0.338	0.300
0.40	10.800	5.400	2.700	1.800	1.350	1.080	0.900	0.771	0.675	0.600
0.60	16.200	8.100	4.050	2.700	2.025	1.620	1.350	1.157	1.013	0.900
0.80	21.600	10.800	5.400	3.600	2.700	2.160	1.800	1.543	1.350	1.200
1.00	27.000	13.500	6.750	4.500	3.375	2.700	2.250	1.929	1.688	1.500
IEC Curve C										
0.05	3.200	1.333	0.500	0.267	0.167	0.114	0.083	0.063	0.050	0.040
0.10	6.400	2.667	1.000	0.533	0.333	0.229	0.167	0.127	0.100	0.081

Multiplier (TDM)	Current (I / I_{pickup})									
	1.5	2.0	3.0	4.0	5.0	6.0	7.0	8.0	9.0	10.0
0.20	12.800	5.333	2.000	1.067	0.667	0.457	0.333	0.254	0.200	0.162
0.40	25.600	10.667	4.000	2.133	1.333	0.914	0.667	0.508	0.400	0.323
0.60	38.400	16.000	6.000	3.200	2.000	1.371	1.000	0.762	0.600	0.485
0.80	51.200	21.333	8.000	4.267	2.667	1.829	1.333	1.016	0.800	0.646
1.00	64.000	26.667	10.000	5.333	3.333	2.286	1.667	1.270	1.000	0.808
IEC Short Inverse										
0.05	0.153	0.089	0.056	0.044	0.038	0.034	0.031	0.029	0.027	0.026
0.10	0.306	0.178	0.111	0.088	0.075	0.067	0.062	0.058	0.054	0.052
0.20	0.612	0.356	0.223	0.175	0.150	0.135	0.124	0.115	0.109	0.104
0.40	1.223	0.711	0.445	0.351	0.301	0.269	0.247	0.231	0.218	0.207
0.60	1.835	1.067	0.668	0.526	0.451	0.404	0.371	0.346	0.327	0.311
0.80	2.446	1.423	0.890	0.702	0.602	0.538	0.494	0.461	0.435	0.415
1.00	3.058	1.778	1.113	0.877	0.752	0.673	0.618	0.576	0.544	0.518

IAC curves

The curves for the General Electric type IAC relay family are derived from the formulae:

$$T = TDM \times \left(A + \frac{B}{(I/I_{pkp}) - C} + \frac{D}{((I/I_{pkp}) - C)^2} + \frac{E}{((I/I_{pkp}) - C)^3} \right) \quad , \quad T_{RESET} = TDM \times \left[\frac{t_r}{1 - (I/I_{pkp})^2} \right] \qquad \text{Eq. 5-11}$$

where

T = operate time (in seconds)
TDM = Multiplier setting
I = Input current
I_{pkp} = Pickup Current setting
A to E = constants defined in the table
t_r = characteristic constant defined in the table
T_{RESET} = reset time in seconds (assuming energy capacity is 100% and RESET is "Timed")

Table 5-33: GE type IAC inverse time curve constants

IAC curve shape	A	B	C	D	E	t_r
IAC Extreme Inverse	0.0040	0.6379	0.6200	1.7872	0.2461	6.008
IAC Very Inverse	0.0900	0.7955	0.1000	–1.2885	7.9586	4.678
IAC Inverse	0.2078	0.8630	0.8000	–0.4180	0.1947	0.990
IAC Short Inverse	0.0428	0.0609	0.6200	–0.0010	0.0221	0.222

Table 5-34: GE type IAC curve trip times

Multiplier (TDM)	Current (I / I_{pickup})									
	1.5	2.0	3.0	4.0	5.0	6.0	7.0	8.0	9.0	10.0
IAC Extremely Inverse										
0.5	1.699	0.749	0.303	0.178	0.123	0.093	0.074	0.062	0.053	0.046
1.0	3.398	1.498	0.606	0.356	0.246	0.186	0.149	0.124	0.106	0.093
2.0	6.796	2.997	1.212	0.711	0.491	0.372	0.298	0.248	0.212	0.185
4.0	13.591	5.993	2.423	1.422	0.983	0.744	0.595	0.495	0.424	0.370
6.0	20.387	8.990	3.635	2.133	1.474	1.115	0.893	0.743	0.636	0.556
8.0	27.183	11.987	4.846	2.844	1.966	1.487	1.191	0.991	0.848	0.741
10.0	33.979	14.983	6.058	3.555	2.457	1.859	1.488	1.239	1.060	0.926

Multiplier (TDM)	Current (I / I_{pickup})									
	1.5	2.0	3.0	4.0	5.0	6.0	7.0	8.0	9.0	10.0
IAC Very Inverse										
0.5	1.451	0.656	0.269	0.172	0.133	0.113	0.101	0.093	0.087	0.083
1.0	2.901	1.312	0.537	0.343	0.266	0.227	0.202	0.186	0.174	0.165
2.0	5.802	2.624	1.075	0.687	0.533	0.453	0.405	0.372	0.349	0.331
4.0	11.605	5.248	2.150	1.374	1.065	0.906	0.810	0.745	0.698	0.662
6.0	17.407	7.872	3.225	2.061	1.598	1.359	1.215	1.117	1.046	0.992
8.0	23.209	10.497	4.299	2.747	2.131	1.813	1.620	1.490	1.395	1.323
10.0	29.012	13.121	5.374	3.434	2.663	2.266	2.025	1.862	1.744	1.654
IAC Inverse										
0.5	0.578	0.375	0.266	0.221	0.196	0.180	0.168	0.160	0.154	0.148
1.0	1.155	0.749	0.532	0.443	0.392	0.360	0.337	0.320	0.307	0.297
2.0	2.310	1.499	1.064	0.885	0.784	0.719	0.674	0.640	0.614	0.594
4.0	4.621	2.997	2.128	1.770	1.569	1.439	1.348	1.280	1.229	1.188
6.0	6.931	4.496	3.192	2.656	2.353	2.158	2.022	1.921	1.843	1.781
8.0	9.242	5.995	4.256	3.541	3.138	2.878	2.695	2.561	2.457	2.375
10.0	11.552	7.494	5.320	4.426	3.922	3.597	3.369	3.201	3.072	2.969
IAC Short Inverse										
0.5	0.072	0.047	0.035	0.031	0.028	0.027	0.026	0.026	0.025	0.025
1.0	0.143	0.095	0.070	0.061	0.057	0.054	0.052	0.051	0.050	0.049
2.0	0.286	0.190	0.140	0.123	0.114	0.108	0.105	0.102	0.100	0.099
4.0	0.573	0.379	0.279	0.245	0.228	0.217	0.210	0.204	0.200	0.197
6.0	0.859	0.569	0.419	0.368	0.341	0.325	0.314	0.307	0.301	0.296
8.0	1.145	0.759	0.559	0.490	0.455	0.434	0.419	0.409	0.401	0.394
10.0	1.431	0.948	0.699	0.613	0.569	0.542	0.524	0.511	0.501	0.493

I^2t curves

The I^2t curves are derived as follows:

$$T = TDM \times \left[\frac{100}{\left(\frac{I}{I_{pickup}} \right)^2} \right], \quad T_{RESET} = TDM \times \left[\frac{100}{\left(\frac{I}{I_{pickup}} \right)^{-2}} \right] \qquad \text{Eq. 5-12}$$

where

T = Operate time (in seconds)
TDM = Multiplier setting
I = Input current
I_{pickup} = Pickup Current setting
T_{RESET} = reset time in seconds (assuming energy capacity is 100% and RESET is "Timed")

Table 5-35: I^2t curve trip times

Multiplier (TDM)	Current (I / I_{pickup})									
	1.5	2.0	3.0	4.0	5.0	6.0	7.0	8.0	9.0	10.0
0.01	0.44	0.25	0.11	0.06	0.04	0.03	0.02	0.02	0.01	0.01
0.10	4.44	2.50	1.11	0.63	0.40	0.28	0.20	0.16	0.12	0.10
1.00	44.44	25.00	11.11	6.25	4.00	2.78	2.04	1.56	1.23	1.00
10.00	444.44	250.00	111.11	62.50	40.00	27.78	20.41	15.63	12.35	10.00
100.00	4444.4	2500.0	1111.1	625.00	400.00	277.78	204.08	156.25	123.46	100.00

Multiplier (TDM)	Current (I / I_{pickup})									
	1.5	2.0	3.0	4.0	5.0	6.0	7.0	8.0	9.0	10.0
600.00	26666.7	15000.0	6666.7	3750.0	2400.0	1666.7	1224.5	937.50	740.74	600.00

FlexCurves

FlexCurves are described in the FlexCurves section later in this chapter. The curve shapes for the FlexCurves are derived from the formulae:

$$T = TDM \times \left[\text{FlexCurve Time at } \left(\frac{I}{I_{pickup}}\right)\right] \text{ when } \left(\frac{I}{I_{pickup}}\right) \geq 1.00 \quad \textbf{Eq. 5-13}$$

$$T_{RESET} = TDM \times \left[\text{FlexCurve Time at } \left(\frac{I}{I_{pickup}}\right)\right] \text{ when } \left(\frac{I}{I_{pickup}}\right) \leq 0.98 \quad \textbf{Eq. 5-14}$$

where

T = operate time (in seconds)
TDM = Multiplier setting
I = Input Current
I_{pickup} = Pickup Current setting
T_{RESET} = Reset Time in seconds (assuming energy capacity is 100% and **RESET**: Timed)

Definite time curve

The Definite Time curve shape operates as soon as the pickup level is exceeded for a specified period of time. The base definite time curve delay is in seconds. The curve multiplier of 0.00 to 600.00 makes this delay adjustable from instantaneous to 600.00 seconds in steps of 10 ms. The definite time curve shapes are defined as follows:

$$T = TDM \text{ in seconds, when } I > I_{pickup} \quad \textbf{Eq. 5-15}$$

$$T_{RESET} = TDM \text{ in seconds} \quad \textbf{Eq. 5-16}$$

where

T = Operate Time (in seconds)
TDM = Multiplier setting
I = Input Current
I_{pickup} = Pickup Current setting
T_{RESET} = Reset Time in seconds (assuming energy capacity is 100% and RESET: Timed)

Recloser curves

The F60 uses the FlexCurve feature to facilitate programming of 41 recloser curves. See the FlexCurves settings section earlier in this chapter for details.

5.7.4.3 Phase time overcurrent (ANSI 51P, IEC PTOC)

SETTINGS ⇨⇩ GROUPED ELEMENTS ⇨⇩ SETTING GROUP 1(6) ⇨ PHASE CURRENT ⇨ PHASE TOC1(4)

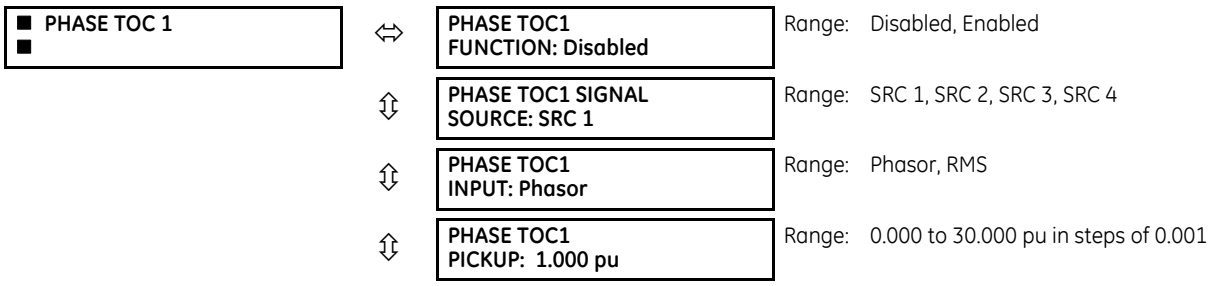

⇳	**PHASE TOC1 CURVE: IEEE Mod Inv**	Range: see Overcurrent Curve Types table
⇳	**PHASE TOC1 TD MULTIPLIER: 1.00**	Range: 0.00 to 600.00 in steps of 0.01
⇳	**PHASE TOC1 RESET: Instantaneous**	Range: Instantaneous, Timed
⇳	**PHASE TOC1 VOLTAGE RESTRAINT: Disabled**	Range: Disabled, Enabled
⇳	**PHASE TOC1 BLOCK A: Off**	Range: FlexLogic operand
⇳	**PHASE TOC1 BLOCK B: Off**	Range: FlexLogic operand
⇳	**PHASE TOC1 BLOCK C: Off**	Range: FlexLogic operand
⇳	**PHASE TOC1 TARGET: Self-reset**	Range: Self-reset, Latched, Disabled
⇧	**PHASE TOC1 EVENTS: Disabled**	Range: Disabled, Enabled

The phase time overcurrent element can provide a specified time-delay operating characteristic versus the applied current or be used as a simple definite time element. The phase current input quantities can be programmed as fundamental phasor magnitude or total waveform RMS magnitude as required by the application.

Two methods of resetting operation are available: "Timed" and "Instantaneous" (see the Inverse TOC Curve Characteristics section earlier for details on curve setup, trip times, and reset operation). When the element is blocked, the time accumulator resets according to the reset characteristic. For example, if the element reset characteristic is set to "Instantaneous" and the element is blocked, the time accumulator clears immediately.

The **PHASE TOC1 PICKUP** setting can be dynamically reduced by a voltage restraint feature (when enabled). This is accomplished via the multipliers (Mvr) corresponding to the phase-phase voltages of the voltage restraint characteristic curve (see the figure); the pickup level is calculated as Mvr times the **PHASE TOC1 PICKUP** setting. If the voltage restraint feature is disabled, the pickup level always remains at the setting value.

Figure 5-91: Phase time overcurrent voltage restraint characteristic

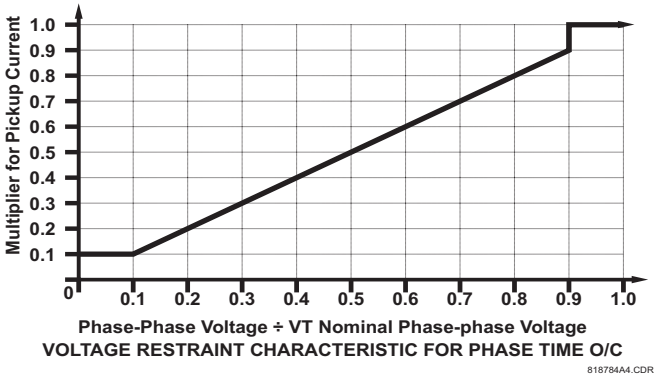

FUNCTION — This setting enables and disables the phase time overcurrent protection element.

SIGNAL SOURCE — Selects the signal source for the phase time overcurrent protection element.

INPUT — Selects how phase current input quantities are interpreted by the F60. Inputs can be selected as fundamental phasor magnitudes or total waveform RMS magnitudes as required by the application.

PICKUP — Specifies the phase time overcurrent pickup level in per-unit values.

CURVE — Selects the time inverse overcurrent curve style.

TD MULTIPLIER — Specifies a multiple of the base curve shape specified by the **CURVE** setting. Programming this value to zero results in an instantaneous response to all current levels above pickup.

RESET — The "Instantaneous" reset method is intended for applications with other relays, such as most static relays, which set the energy capacity directly to zero when the current falls below the reset threshold. The "Timed" reset method can be used where the relay must coordinate with electromechanical relays.

VOLTAGE RESTRAINT — Enables and disables the phase time overcurrent voltage restraint feature.

BLOCK A — Assertion of the operand assigned to this setting blocks phase A of the phase time overcurrent element.

EVENTS — Enables and disables the logging of phase time overcurrent events in the sequence of events recorder.

Figure 5-92: Phase time overcurrent 1 logic

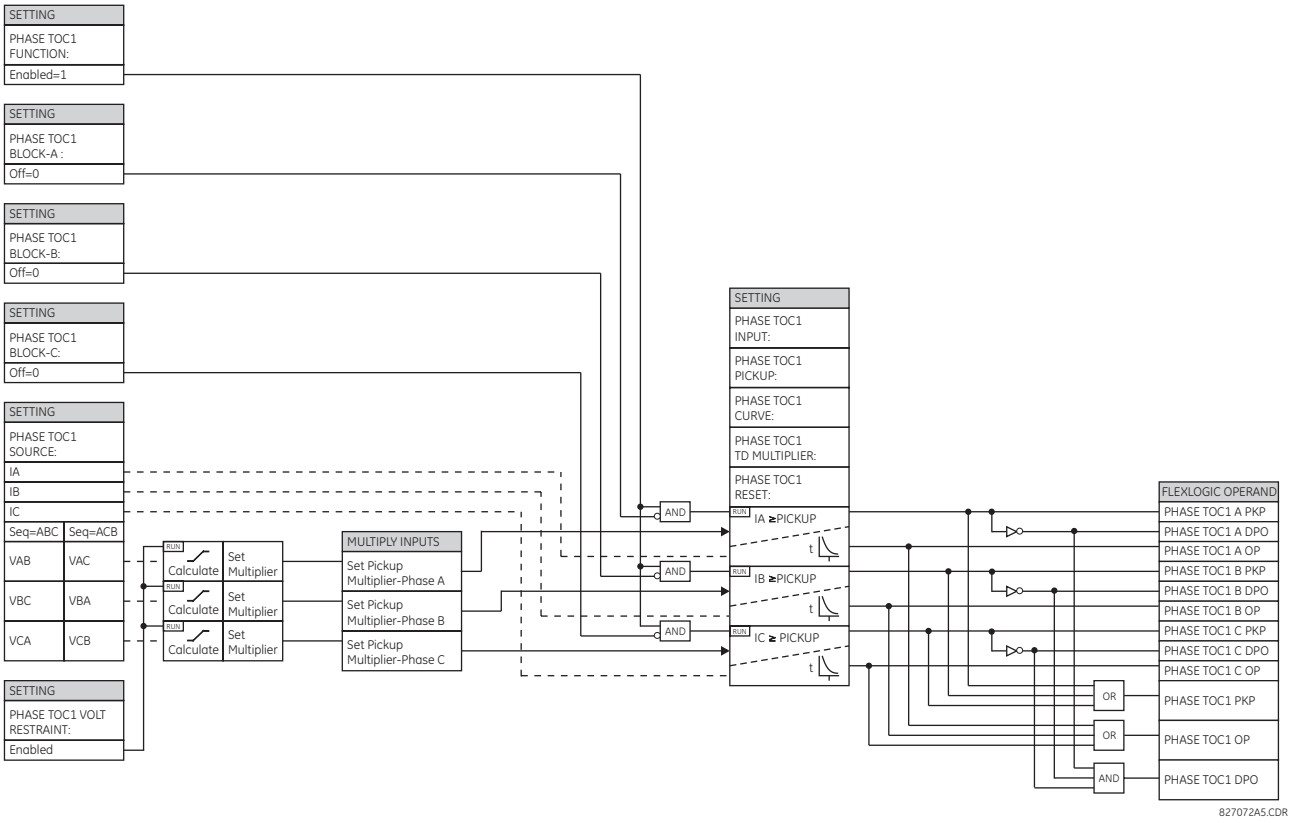

5.7.4.4 Phase instantaneous overcurrent (ANSI 50P, IEC PIOC)

SETTINGS ⇨⇩ GROUPED ELEMENTS ⇨ SETTING GROUP 1(6) ⇨ PHASE CURRENT ⇨ PHASE IOC 1(8)

■ **PHASE IOC 1** ■	⇔	**PHASE IOC1 FUNCTION: Disabled**	Range: Disabled, Enabled
	⇳	**PHASE IOC1 SIGNAL SOURCE: SRC 1**	Range: SRC 1, SRC 2, SRC 3, SRC 4
	⇳	**PHASE IOC1 PICKUP: 1.000 pu**	Range: 0.000 to 30.000 pu in steps of 0.001
	⇳	**PHASE IOC1 PICKUP DELAY: 0.00 s**	Range: 0.00 to 600.00 s in steps of 0.01
	⇳	**PHASE IOC1 RESET DELAY: 0.00 s**	Range: 0.00 to 600.00 s in steps of 0.01

⇳	**PHASE IOC1 BLOCK A: Off**	Range: FlexLogic operand
⇩		
⇳	**PHASE IOC1 BLOCK C: Off**	Range: FlexLogic operand
⇳	**PHASE IOC1 TARGET: Self-reset**	Range: Self-reset, Latched, Disabled
⇧	**PHASE IOC1 EVENTS: Disabled**	Range: Disabled, Enabled

The phase instantaneous overcurrent element can be used as an instantaneous element with no intentional delay or as a definite time element. The input current is the fundamental phasor magnitude.

FUNCTION — This setting enables and disables the phase instantaneous overcurrent protection element.

SOURCE — Selects the signal source for the phase instantaneous overcurrent protection element.

PICKUP — Specifies the phase instantaneous overcurrent pickup level in per-unit values.

DELAY —Delays the assertion of the PHASE IOC OP operands. It is used to achieve timing coordination with other elements and relays.

RESET DELAY — Specifies a delay for the reset of the phase instantaneous overcurrent element between the operate output state and the return to logic 0 after the input passes outside the defined pickup range. This setting is used to ensure that the relay output contacts are closed long enough to ensure reception by downstream equipment.

BLOCK A — Assertion of the operand assigned to this setting block's phase A of the phase instantaneous overcurrent element.

EVENTS — Enables and disables the logging of phase instantaneous overcurrent events in the sequence of events recorder.

Figure 5-93: Phase instantaneous overcurrent 1 logic

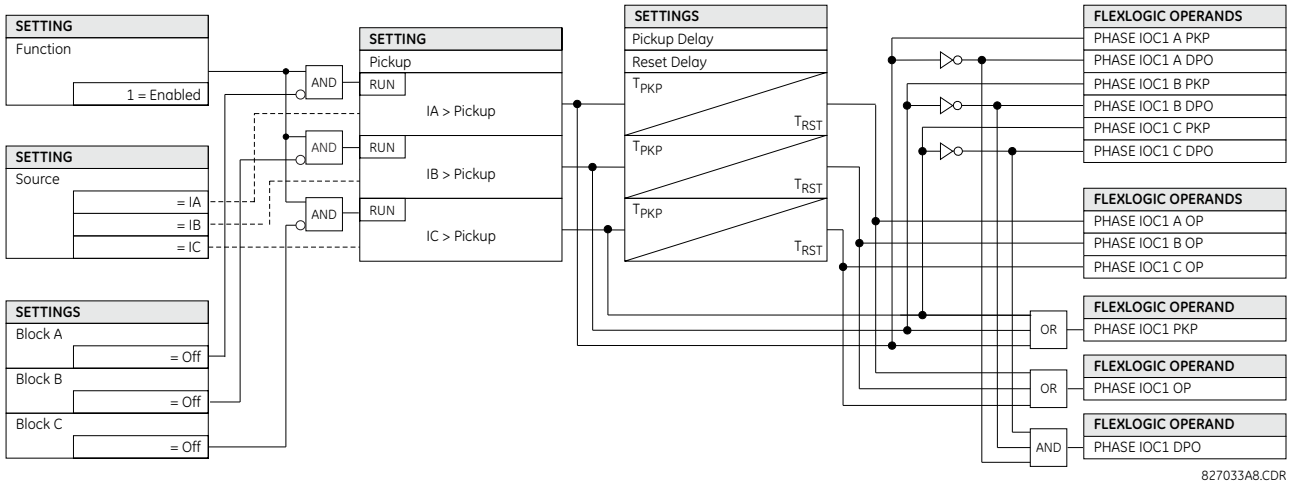

5.7.4.5 Phase directional overcurrent (ANSI 67P, IEC PDOC/PTOC)

SETTINGS ⇨⇩ GROUPED ELEMENTS ⇨ SETTING GROUP 1(6) ⇨ PHASE CURRENT ⇨ PHASE DIRECTIONAL 1(2)

■ PHASE ■ DIRECTIONAL 1	⇔ **PHASE DIR 1 FUNCTION: Disabled**	Range: Disabled, Enabled
	⇳ **PHASE DIR 1 SIGNAL SOURCE: SRC 1**	Range: SRC 1, SRC 2, SRC 3, SRC 4
	⇳ **PHASE DIR 1 BLOCK: Off**	Range: FlexLogic operand

⇳	**PHASE DIR 1 ECA: 30°**	Range: 0 to 359° in steps of 1
⇳	**PHASE DIR POL V1 THRESHOLD: 0.700 pu**	Range: 0.000 to 3.000 pu in steps of 0.001
⇳	**PHASE DIR 1 BLOCK WHEN V MEM EXP: No**	Range: No, Yes
⇳	**PHASE DIR 1 TARGET: Self-reset**	Range: Self-reset, Latched, Disabled
⇧	**PHASE DIR 1 EVENTS: Disabled**	Range: Disabled, Enabled

NOTE

The TARGET setting is not user-selectable and forced to "Disabled". If Targets are required from directional elements, it can be achieved by assigning directional element output to a digital element, where targets selection can be used as required.

The phase directional elements (one for each of phases A, B, and C) determine the phase current flow direction for steady state and fault conditions and can be used to control the operation of the phase overcurrent elements via the **BLOCK** inputs of these elements.

Figure 5-94: Phase A directional polarization

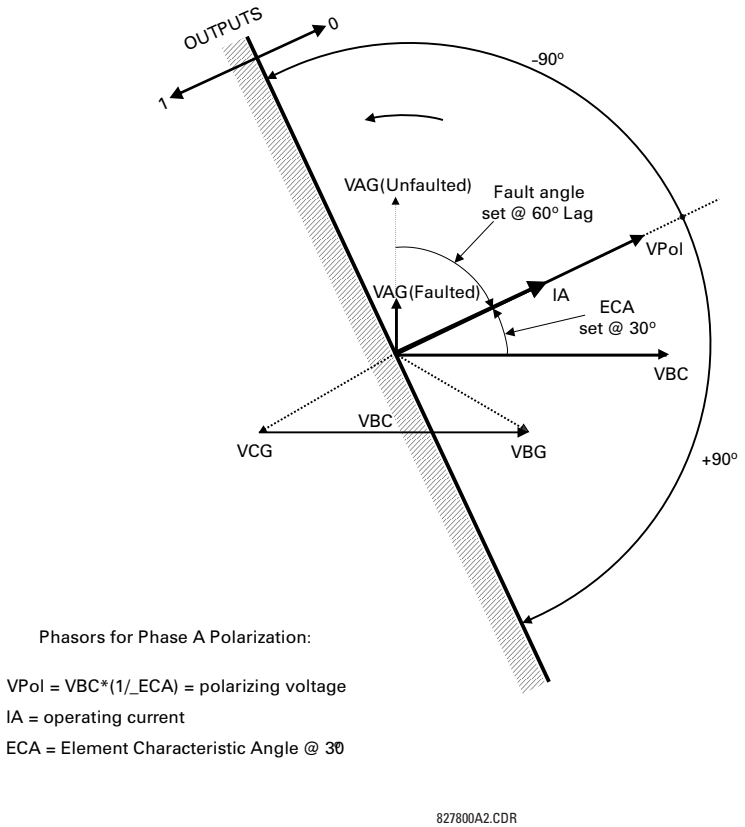

Phasors for Phase A Polarization:

VPol = VBC*(1/_ECA) = polarizing voltage

IA = operating current

ECA = Element Characteristic Angle @ 30°

827800A2.CDR

This element is intended to apply a block signal to an overcurrent element to prevent an operation when current is flowing in a particular direction. The direction of current flow is determined by measuring the phase angle between the current from the phase CTs and the line-line voltage from the VTs, based on the 90° or quadrature connection. If there is a requirement to supervise overcurrent elements for flows in opposite directions, such as can happen through a bus-tie breaker, two phase directional elements should be programmed with opposite element characteristic angle (ECA) settings.

To increase security for three phase faults very close to the VTs used to measure the polarizing voltage, a voltage memory feature is incorporated. This feature stores the polarizing voltage the moment before the voltage collapses, and uses it to determine direction. The voltage memory remains valid for one second after the voltage has collapsed.

The main component of the phase directional element is the phase angle comparator with two inputs: the operating signal (phase current) and the polarizing signal (the line voltage, shifted in the leading direction by the characteristic angle, ECA).

The table shows the operating and polarizing signals used for phase directional control.

Table 5-36: Operating and polarizing signals

Phase	Operating signal	Polarizing signal V_{pol}	
		ABC phase sequence	ACB phase sequence
A	angle of IA	angle of VBC × (1∠ECA)	angle of VCB × (1∠ECA)
B	angle of IB	angle of VCA × (1∠ECA)	angle of VAC × (1∠ECA)
C	angle of IC	angle of VAB × (1∠ECA)	angle of VBA × (1∠ECA)

Mode of operation

- When the function is "Disabled" or the operating current is below 5% × CT nominal, the element output is logic "0"
- When the function is "Enabled," the operating current is above 5% × CT nominal, and the polarizing voltage is above the **PRODUCT SETUP ⇨⇩ DISPLAY PROPERTIES ⇨⇩ VOLTAGE CUT-OFF LEVEL** value, the element output is dependent on the phase angle between the operating and polarizing signals:
  - The element output is logic "0" when the operating current is within polarizing voltage ±90°
  - For all other angles, the element output is logic "1"
- Once the voltage memory has expired, the phase overcurrent elements under directional control can be set to block or trip on overcurrent as follows:
  - When **BLOCK WHEN V MEM EXP** is set to "Yes," the directional element blocks the operation of any phase overcurrent element under directional control when voltage memory expires
  - When **BLOCK WHEN V MEM EXP** is set to "No," the directional element allows tripping of phase overcurrent elements under directional control when voltage memory expires

In all cases, directional blocking is permitted to resume when the polarizing voltage becomes greater than the polarizing voltage threshold.

Settings

PHASE DIR 1 FUNCTION — This setting enables and disables the phase directional overcurrent protection element.

PHASE DIR 1 SIGNAL SOURCE — This setting is used to select the source for the operating and polarizing signals. The operating current for the phase directional element is the phase current for the selected current source. The polarizing voltage is the line voltage from the phase VTs, based on the 90° or quadrature connection and shifted in the leading direction by the element characteristic angle (ECA).

PHASE DIR 1 BLOCK — Assertion of the operand assigned to this setting blocks operation of the phase directional overcurrent element.

PHASE DIR 1 ECA — This setting specifies the element characteristic angle, that is, the angle by which the polarizing voltage is shifted in the leading direction to achieve dependable operation. In the design of the UR-series elements, a block is applied to an element by asserting logic 1 at the blocking input. Program the phase directional overcurrent element using this setting so that the output is logic 1 for current in the non-tripping direction.

PHASE DIR 1 POL V THRESHOLD — This setting is used to establish the minimum level of voltage for which the phase angle measurement is healthy and reliable. Do not set this setting too low because the element can continue using the actual voltage already distorted by the fault instead of using healthy memory voltage—this can cause wrong directional discrimination.

PHASE DIR 1 BLOCK WHEN V MEM EXP — This setting is used to select the required operation upon expiration of voltage memory. When set to "Yes," the directional element blocks the operation of any phase overcurrent element under directional control, when voltage memory expires. When set to "No," the directional element allows tripping of phase overcurrent elements under directional control.

PHASE DIR 1 EVENTS — This setting enables and disables the logging of phase directional overcurrent events in the sequence of events recorder.

NOTE

The phase directional element responds to the forward load current. In the case of a following reverse fault, the element needs some time—in the order of 8 ms—to establish a blocking signal. Some protection elements, such as instantaneous overcurrent, respond to reverse faults before the blocking signal is established. Therefore, a coordination time of at least 10 ms must be added to all the instantaneous protection elements under the supervision of the phase directional element. If current reversal is of concern, a longer delay—in the order of 20 ms—is needed.

Figure 5-95: Phase directional logic

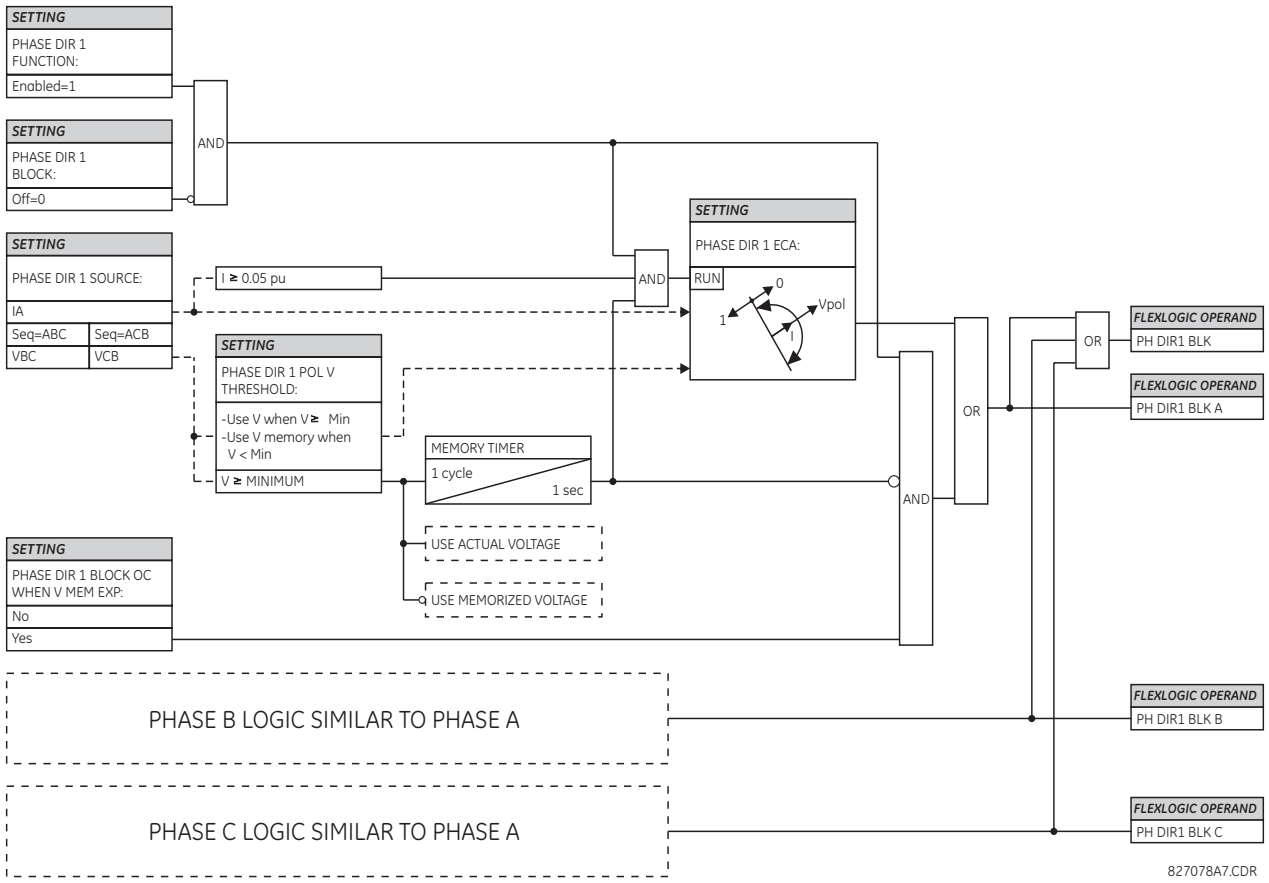

5.7.5 Neutral current

5.7.5.1 Menu

SETTINGS ⇨⇩ GROUPED ELEMENTS ⇨ SETTING GROUP 1(6) ⇨⇩ NEUTRAL CURRENT

■ NEUTRAL CURRENT ■ ⇔ ■ NEUTRAL TOC1 ■ See below

⇩

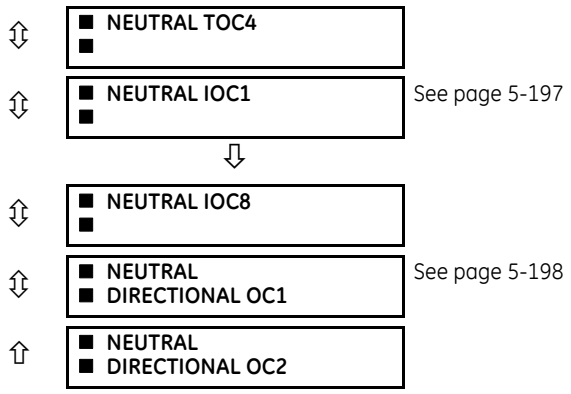

5.7.5.2 Neutral time overcurrent (ANSI 51N, IEC PTOC)

SETTINGS ⇨⇩ GROUPED ELEMENTS ⇨ SETTING GROUP 1(6) ⇨⇩ NEUTRAL CURRENT ⇨ NEUTRAL TOC1(4)

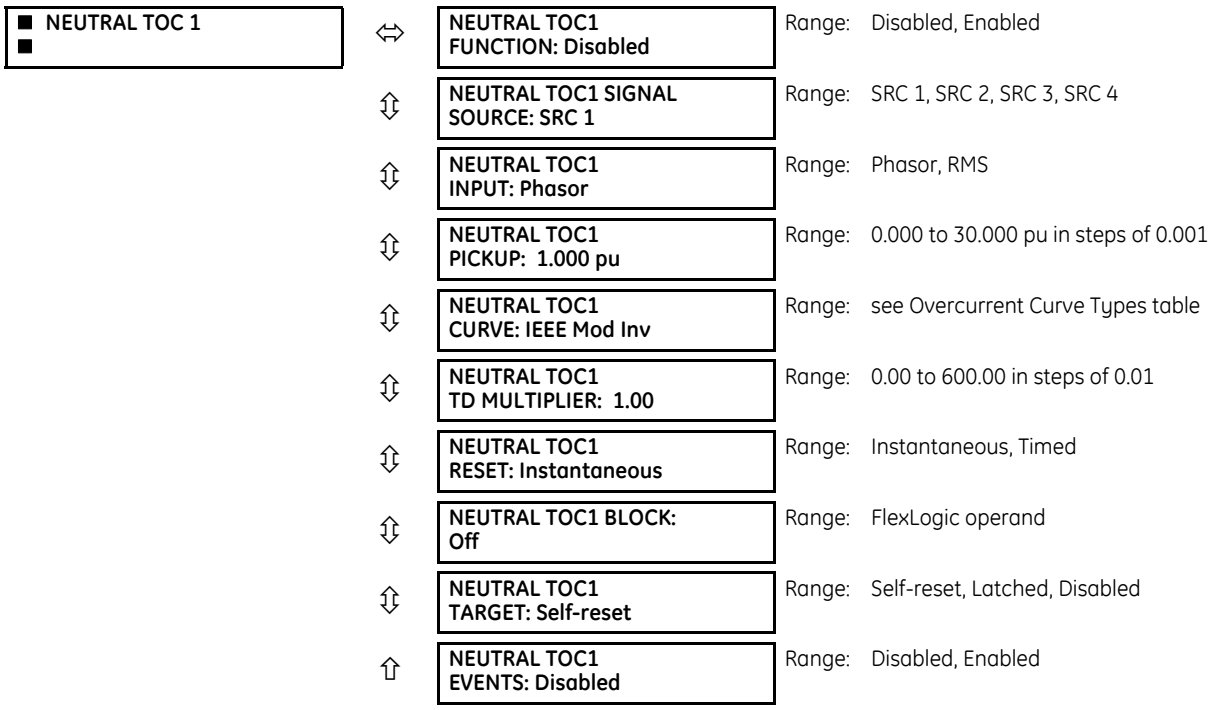

The neutral time overcurrent element can provide a desired time-delay operating characteristic versus the applied current or be used as a simple definite time element. The neutral current input value is a quantity calculated as 3I0 from the phase currents and can be programmed as fundamental phasor magnitude or total waveform RMS magnitude as required by the application.

Two methods of resetting operation are available: "Timed" and "Instantaneous" (see the Inverse TOC Curve Characteristics section for details on curve setup, trip times, and reset operation). When the element is blocked, the time accumulator resets according to the reset characteristic. For example, if the element reset characteristic is set to "Instantaneous" and the element is blocked, the time accumulator clears immediately.

NEUTRAL TOC1 FUNCTION — This setting enables and disables the neutral time overcurrent protection element.

NEUTRAL TOC1 SIGNAL SOURCE — This setting selects the signal source for the neutral time overcurrent protection element.

NEUTRAL TOC1 INPUT — This setting selects how neutral current input quantities are interpreted by the F60. Inputs can be selected as fundamental phasor magnitudes or total waveform RMS magnitudes as required by the application.

NEUTRAL TOC1 PICKUP — This setting specifies the neutral time overcurrent pickup level in per-unit values.

NEUTRAL TOC1 CURVE — This setting selects the inverse time overcurrent curve style.

NEUTRAL TOC1 TD MULTIPLIER — This setting specifies a multiple of the base curve shape specified by the **CURVE** setting. Programming this value to zero results in an instantaneous response to all current levels above pickup.

NEUTRAL TOC1 RESET — The "Instantaneous" reset method is intended for applications with other relays, such as most static relays, which set the energy capacity directly to zero when the current falls below the reset threshold. The "Timed" reset method can be used where the relay must coordinate with electromechanical relays.

NEUTRAL TOC1 BLOCK — Assertion of the operand assigned to this setting blocks operation of the neutral time overcurrent element.

NEUTRAL TOC1 EVENTS — This setting enables and disables the logging of neutral time overcurrent events in the sequence of events recorder.

Figure 5-96: Neutral time overcurrent 1 logic

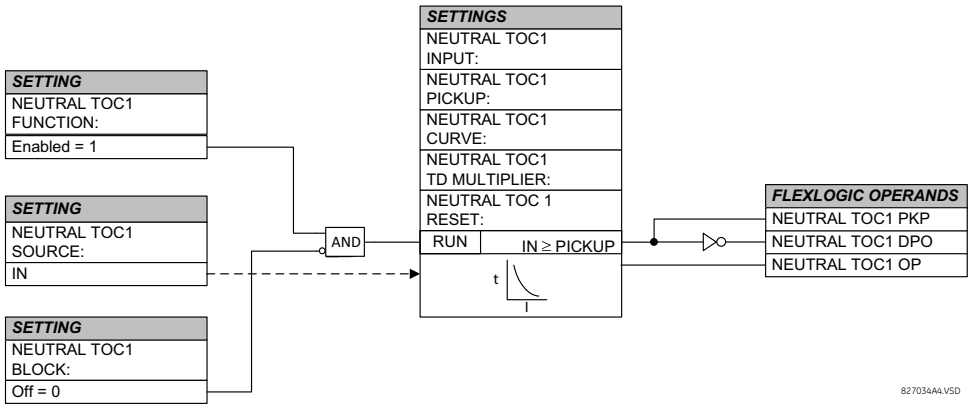

5.7.5.3 Neutral instantaneous overcurrent (ANSI 50N, IEC PIOC)

SETTINGS ⇨⇩ GROUPED ELEMENTS ⇨ SETTING GROUP 1(6) ⇨⇩ NEUTRAL CURRENT ⇨⇩ NEUTRAL IOC1(8)

■ NEUTRAL IOC 1 ■	⇔	**NEUTRAL IOC1 FUNCTION: Disabled**	Range: Disabled, Enabled
	⇩	**NEUTRAL IOC1 SIGNAL SOURCE: SRC 1**	Range: SRC 1, SRC 2, SRC 3, SRC 4
	⇩	**NEUTRAL IOC1 PICKUP: 1.000 pu**	Range: 0.000 to 30.000 pu in steps of 0.001
	⇩	**NEUTRAL IOC1 PICKUP DELAY: 0.00 s**	Range: 0.00 to 600.00 s in steps of 0.01
	⇩	**NEUTRAL IOC1 RESET DELAY: 0.00 s**	Range: 0.00 to 600.00 s in steps of 0.01
	⇩	**NEUTRAL IOC1 BLOCK: Off**	Range: FlexLogic operand
	⇩	**NEUTRAL IOC1 TARGET: Self-reset**	Range: Self-reset, Latched, Disabled
	⇩	**NEUTRAL IOC1 EVENTS: Disabled**	Range: Disabled, Enabled

The neutral instantaneous overcurrent element can be used as an instantaneous function with no intentional delay or as a definite time function. The element essentially responds to the magnitude of a neutral current fundamental frequency phasor calculated from the phase currents. A positive-sequence restraint is applied for better performance. A small portion (6.25%) of the positive-sequence current magnitude is subtracted from the zero-sequence current magnitude when forming the operating quantity of the element as follows:

$$I_{op} = 3 \times (|I\_0| - K \times |I\_1|) \quad \text{where } K = 1/16 \qquad \textbf{Eq. 5-17}$$

The positive-sequence restraint allows for more sensitive settings by counterbalancing spurious zero-sequence currents resulting from:

- System unbalances under heavy load conditions
- Transformation errors of current transformers (CTs) during double-line and three-phase faults
- Switch-off transients during double-line and three-phase faults

The positive-sequence restraint must be considered when testing for pickup accuracy and response time (multiple of pickup). The operating quantity depends on how test currents are injected into the relay, where single-phase injection is $I_{op} = 0.9375 \times I_{injected}$ and three-phase pure zero-sequence injection is $I_{op} = 3 \times I_{injected}$

NEUTRAL IOC1 FUNCTION — This setting enables and disables the neutral instantaneous overcurrent protection element.

NEUTRAL IOC1 SIGNAL SOURCE — This setting selects the signal source for the neutral instantaneous overcurrent protection element.

NEUTRAL IOC1 PICKUP — This setting specifies the neutral instantaneous overcurrent pickup level in per-unit values.

NEUTRAL IOC1 PICKUP DELAY — This setting delays the assertion of the NEUTRAL IOC OP operands. It is used to achieve timing coordination with other elements and relays.

NEUTRAL IOC1 RESET DELAY — This setting specifies a delay for the reset of the neutral instantaneous overcurrent element between the operate output state and the return to logic 0 after the input passes outside the defined pickup range. This setting is used to ensure that the relay output contacts are closed long enough to ensure reception by downstream equipment.

NEUTRAL IOC1 BLOCK — Assertion of the operand assigned to this setting blocks operation of the neutral instantaneous overcurrent element.

NEUTRAL IOC1 EVENTS — This setting enables and disables the logging of neutral instantaneous overcurrent events in the sequence of events recorder.

5

Figure 5-97: Neutral IOC1 logic

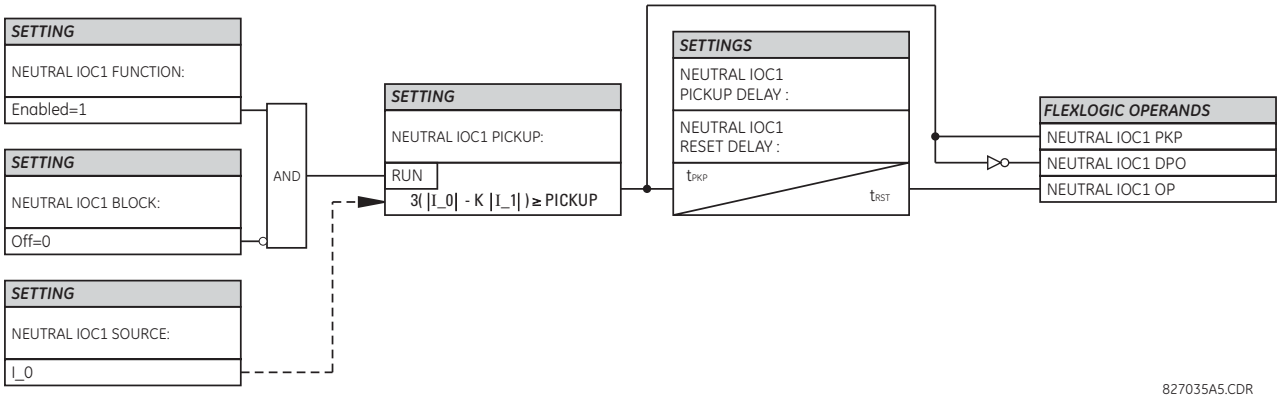

5.7.5.4 Neutral directional overcurrent (ANSI 67N, IEC PDEF/PTOC)

SETTINGS ⇨⇩ GROUPED ELEMENTS ⇨ SETTING GROUP 1(6) ⇨⇩ NEUTRAL CURRENT ⇨⇩ NEUTRAL DIRECTIONAL OC1(2)

■ NEUTRAL ■ DIRECTIONAL OC1	⇔	**NEUTRAL DIR OC1 FUNCTION: Disabled**	Range: Disabled, Enabled
	⇩	**NEUTRAL DIR OC 1 SOURCE: SRC 1**	Range: SRC 1, SRC 2, SRC 3, SRC 4
	⇩	**NEUTRAL DIR OC1 POLARIZING: Voltage**	Range: Voltage, Current, Dual, Dual-V, Dual-I

⇳	**NEUTRAL DIR OC1 POL VOLT: Calculated V0**	Range: Calculated V0, Aux. Voltage (VX)
⇳	**NEUTRAL DIR OC1 OP CURR: Calculated 3I0**	Range: Calculated 3I0, Measured IG
⇳	**NEUTRAL DIR OC1 POS-SEQ RESTRAINT: 0.063**	Range: 0.000 to 0.500 in steps of 0.001
⇳	**NEUTRAL DIR OC1 OFFSET: 0.00 Ω**	Range: 0.00 to 250.00 Ω in steps of 0.01
⇳	**NEUTRAL DIR OC1 FWD ECA: 75° Lag**	Range: –90 to 90° in steps of 1
⇳	**NEUTRAL DIR OC1 FWD LIMIT ANGLE: 90°**	Range: 40 to 90° in steps of 1
⇳	**NEUTRAL DIR OC1 FWD PICKUP: 0.050 pu**	Range: 0.006 to 30.000 pu in steps of 0.001
⇳	**NEUTRAL DIR OC1 REV LIMIT ANGLE: 90°**	Range: 40 to 90° in steps of 1
⇳	**NEUTRAL DIR OC1 REV PICKUP: 0.050 pu**	Range: 0.006 to 30.000 pu in steps of 0.001
⇳	**NEUTRAL DIR OC1 BLK: Off**	Range: FlexLogic operand
⇳	**NEUTRAL DIR OC1 TARGET: Self-reset**	Range: Self-reset, Latched, Disabled
⇧	**NEUTRAL DIR OC1 EVENTS: Disabled**	Range: Disabled, Enabled

The neutral directional overcurrent element provides both forward and reverse fault direction indications for the NEUTRAL DIR OC1 FWD and NEUTRAL DIR OC1 REV operands, respectively. The output operand is asserted if the magnitude of the operating current is above a pickup level (overcurrent unit) and the fault direction is seen as forward or reverse, respectively (directional unit).

The **overcurrent unit** responds to the magnitude of a fundamental frequency phasor of either the neutral current calculated from the phase currents or the ground current. There are separate pickup settings for the forward-looking and reverse-looking functions. If set to use the calculated 3I_0, the element applies a positive-sequence restraint for better performance: a small user-programmable portion of the positive-sequence current magnitude is subtracted from the zero-sequence current magnitude when forming the operating quantity.

$$I_{op} = 3 \times (|I\_0| - K \times |I\_1|) \quad \textbf{Eq. 5-18}$$

The positive-sequence restraint allows for more sensitive settings by counterbalancing spurious zero-sequence currents resulting from

- System unbalances under heavy load conditions
- Transformation errors of current transformers (CTs) during double-line and three-phase faults
- Switch-off transients during double-line and three-phase faults

The positive-sequence restraint must be considered when testing for pickup accuracy and response time (multiple of pickup). The operating quantity depends on the way the test currents are injected into the relay (single-phase injection: $I_{op} = (1 - K) \times I_{injected}$; three-phase pure zero-sequence injection: $I_{op} = 3 \times I_{injected}$.

The positive-sequence restraint is removed for low currents. If the positive-sequence current is below 0.8 pu, the restraint is removed by changing the constant K to zero. This facilitates better response to high-resistance faults when the unbalance is very small and there is no danger of excessive CT errors as the current is low.

The **directional unit** uses the zero-sequence current (I_0) or ground current (IG) for fault direction discrimination and can be programmed to use either zero-sequence voltage ("Calculated V0" or "Measured VX"), ground current (IG), or both for polarizing. The zero-sequence current (I_0) must be greater than the **PRODUCT SETUP ⇨⇩ DISPLAY PROPERTIES ⇨⇩ CURRENT**

CUT-OFF LEVEL setting value and IG must be greater than 0.05 pu to be validated as the operating quantity for directional current. The following tables define the neutral directional overcurrent element. V_0 is the zero-sequence voltage, I_0 is the zero-sequence current, ECA is the element characteristic angle, and IG is the ground current.

Table 5-37: Quantities for "calculated 3I0" configuration

Directional unit				Overcurrent unit
Polarizing mode	**Direction**	**Compared phasors**		
Voltage	Forward	–V_0 + Z_offset × I_0	I_0 × 1∠ECA	$I_{op} = 3 \times (\|I\_0\| - K \times \|I\_1\|)$ if $\|I_1\| > 0.8$ pu $I_{op} = 3 \times (\|I\_0\|)$ if $\|I_1\| \le 0.8$ pu
	Reverse	–V_0 + Z_offset × I_0	–I_0 × 1∠ECA	
Current	Forward	IG	I_0	
	Reverse	IG	–I_0	
Dual, Dual-V, Dual-I	Forward	–V_0 + Z_offset × I_0	I_0 × 1∠ECA	
		or		
		IG	I_0	
	Reverse	–V_0 + Z_offset × I_0	–I_0 × 1∠ECA	
		or		
		IG	–I_0	

Table 5-38: Quantities for "measured IG" configuration

Directional unit				Overcurrent unit
Polarizing mode	**Direction**	**Compared phasors**		
Voltage	Forward	–V_0 + Z_offset × IG/3	IG × 1∠ECA	$I_{op} = \|IG\|$
	Reverse	–V_0 + Z_offset × IG/3	–IG × 1∠ECA	

where:

$$V\_0 = \frac{1}{3}(VAG + VBG + VCG) = \text{zero sequence voltage}$$

$$I\_0 = \frac{1}{3}IN = \frac{1}{3}(IA + IB + IC) = \text{zero sequence current}$$

ECA = element characteristic angle
IG = ground current
Z_offset is the offset impedance, for which magnitude is the OFFSET setting and angle is the FWD ECA

When **NEUTRAL DIR OC1 POL VOLT** is set to "Measured VX," one-third of this voltage is used in place of V_0. The following figure explains the usage of the voltage polarized directional unit of the element.

The figure shows the voltage-polarized phase angle comparator characteristics for a phase A to ground fault, with:

- ECA = 90° (element characteristic angle = centerline of operating characteristic)
- FWD LA = 80° (forward limit angle = the ± angular limit with the ECA for operation)
- REV LA = 80° (reverse limit angle = the ± angular limit with the ECA for operation)

The element incorporates a current reversal logic. If the reverse direction is indicated for at least 1.25 of a power system cycle, the prospective forward indication is delayed by 1.5 of a power system cycle. The element is designed to emulate an electromechanical directional device. Larger operating and polarizing signals results in faster directional discrimination bringing more security to the element operation.

The forward-looking function is designed to be more secure as compared to the reverse-looking function, and therefore is to be used for the tripping direction. The reverse-looking function is designed to be faster as compared to the forward-looking function and is to be used for the blocking direction. This allows for better protection coordination.

Take the bias into account when using the neutral directional overcurrent element to directionalize other protection elements.

Figure 5-98: Neutral directional voltage-polarized characteristics

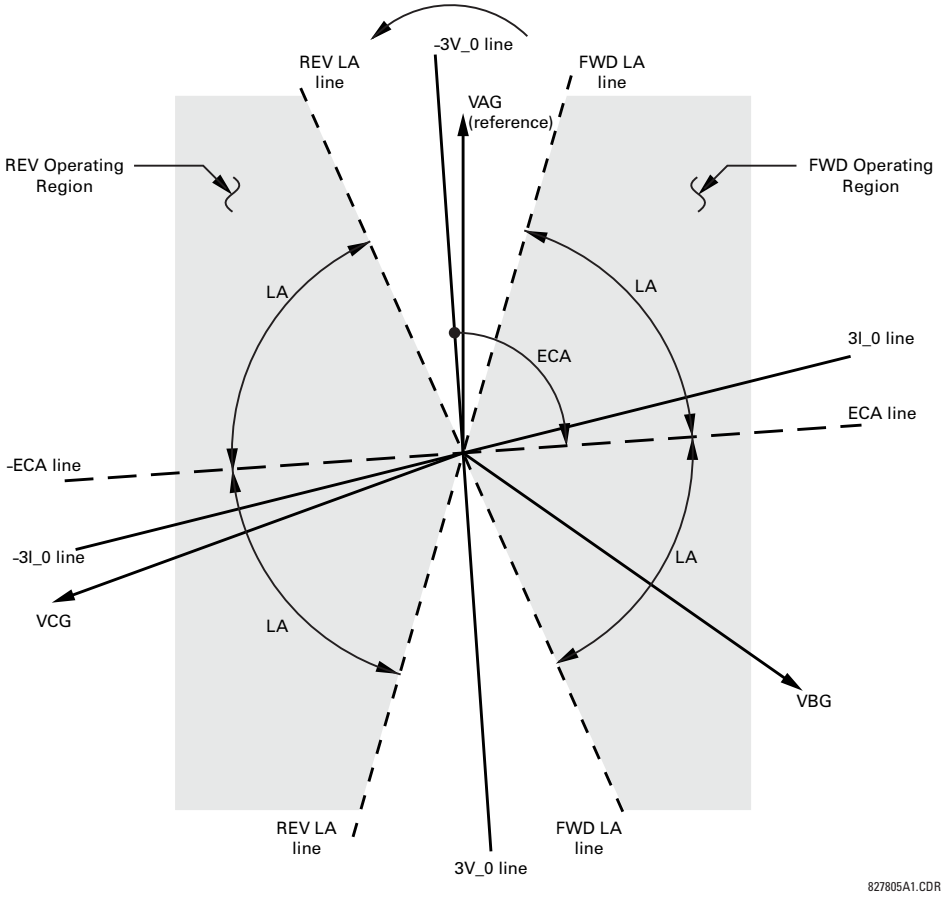

NEUTRAL DIR OC1 POLARIZING — This setting selects the polarizing mode for the directional unit.

- If "Voltage" polarizing is selected, the element uses the zero-sequence voltage angle for polarization. The user can use either the zero-sequence voltage V_0 calculated from the phase voltages, or the zero-sequence voltage supplied externally as the auxiliary voltage V_X, both from the **NEUTRAL DIR OC1 SOURCE**.

  The calculated V_0 can be used as polarizing voltage only if the voltage transformers are connected in Wye. The auxiliary voltage can be used as the polarizing voltage provided **SYSTEM SETUP ⇨ AC INPUTS ⇨⇩ VOLTAGE BANK ⇨⇩ AUXILIARY VT CONNECTION** is set to "Vn" and the auxiliary voltage is connected to a zero-sequence voltage source (such as broken delta connected secondary of VTs).

  The zero sequence voltage V_0 must be greater than **PRODUCT SETUP ⇨⇩ DISPLAY PROPERTIES ⇨⇩ VOLTAGE CUT-OFF LEVEL** to be validated for use as polarizing signal. Additionally, when offset impedance is applied and zero-sequence current is above 0.2 pu, compensated zero-sequence voltage -V_0 + Z_offset x I_0 has to be above 0.02 pu in order to discriminate fault direction; otherwise when zero-sequence current is less than 0.2 pu, -V_0 is then used as the polarizing signal. If the polarizing signal is invalid, neither forward nor reverse indication is given.
- If "Current" polarizing is selected, the element uses the ground current angle connected externally and configured under **NEUTRAL OC1 SOURCE** for polarization. The ground CT must be connected between the ground and neutral point of an adequate local source of ground current. The ground current must be greater than 0.05 pu to be validated as a polarizing signal. If the polarizing signal is not valid, neither forward nor reverse indication is given. In addition, the zero-sequence current (I_0) must be greater than the **PRODUCT SETUP ⇨⇩ DISPLAY PROPERTIES ⇨⇩ CURRENT CUT-OFF LEVEL** setting value.

  For a choice of current polarizing, it is recommended that the polarizing signal be analyzed to ensure that a known direction is maintained irrespective of the fault location. For example, if using an autotransformer neutral current as a polarizing source, ensure that a reversal of the ground current does not occur for a high-side fault. Assume that the

low-side system impedance is minimal when checking for this condition. A similar situation arises for a wye/delta/wye transformer, where current in one transformer winding neutral can reverse when faults on both sides of the transformer are considered.

- If “Dual” polarizing is selected, the element performs both directional comparisons as described. A given direction is confirmed if either voltage or current comparators indicate so. If a conflicting (simultaneous forward and reverse) indication occurs, the forward direction overrides the reverse direction.
- If "Dual-V" polarizing is selected, "Voltage" polarizing is performed and "Current" polarizing is ignored if the voltage polarizing signal is valid; otherwise "Current" polarizing is performed if the current polarizing signal is valid. If neither of them is valid, neither forward nor reverse indication is given.
- If "Dual-I" polarizing is selected, "Current" polarizing is performed and "Voltage" polarizing is ignored if the current polarizing signal is valid; otherwise "Voltage" polarizing is performed if the voltage polarizing signal is valid. If neither of them is valid, neither forward nor reverse indication is given.

NEUTRAL DIR OC1 POL VOLT — Selects the polarizing voltage used by the directional unit when "Voltage," "Dual," "Dual-V," or "Dual-I" polarizing mode is set. The polarizing voltage can be programmed to be either the zero-sequence voltage calculated from the phase voltages ("Calculated V0") or supplied externally as an auxiliary voltage ("Measured VX").

NEUTRAL DIR OC1 OP CURR — This setting indicates whether the 3I_0 current calculated from the phase currents, or the ground current is used by this protection. This setting acts as a switch between the neutral and ground modes of operation (ANSI devices 67N and 67G). If set to “Calculated 3I0,” the element uses the phase currents and applies the positive-sequence restraint. If set to “Measured IG,” the element uses ground current supplied to the ground CT of the CT bank configured as **NEUTRAL DIR OC1 SOURCE**. If this setting is “Measured IG,” then the **NEUTRAL DIR OC1 POLARIZING** setting must be “Voltage”, as it is not possible to use the ground current as an operating and polarizing signal simultaneously. IG current has to be above 0.05 ps to be used as operate quantity.

NEUTRAL DIR OC1 POS-SEQ RESTRAINT — This setting controls the amount of the positive-sequence restraint. Set it to 0.063 for backward compatibility with firmware revision 3.40 and older. Set it to zero to remove the restraint. Set it higher if large system unbalances or poor CT performance are expected.

NEUTRAL DIR OC1 OFFSET — This setting specifies the offset impedance used by this protection. The primary application for the offset impedance is to guarantee correct identification of fault direction on series compensated lines. In regular applications, the offset impedance ensures proper operation even if the zero-sequence voltage at the relaying point is very small. If this is the intent, the offset impedance is not to be larger than the zero-sequence impedance of the protected circuit. Practically, it shall be several times smaller. Enter the offset impedance in secondary ohms.

NEUTRAL DIR OC1 FWD ECA — This setting defines the characteristic angle (ECA) for the forward direction in the "Voltage" polarizing mode. The "Current" polarizing mode uses a fixed ECA of 0°. The ECA in the reverse direction is the angle set for the forward direction shifted by 180°.

NEUTRAL DIR OC1 FWD LIMIT ANGLE — This setting defines a symmetrical (in both directions from the ECA) limit angle for the forward direction.

NEUTRAL DIR OC1 FWD PICKUP — This setting defines the pickup level for the overcurrent unit of the element in the forward direction. When selecting this setting, keep in mind that the design uses a positive-sequence restraint technique for the “Calculated 3I0” mode of operation.

NEUTRAL DIR OC1 REV LIMIT ANGLE — This setting defines a symmetrical (in both directions from the ECA) limit angle for the reverse direction.

NEUTRAL DIR OC1 REV PICKUP — This setting defines the pickup level for the overcurrent unit of the element in the reverse direction. When selecting this setting, keep in mind that the design uses a positive-sequence restraint technique for the “Calculated 3I0” mode of operation.

Figure 5-99: Neutral directional overcurrent logic

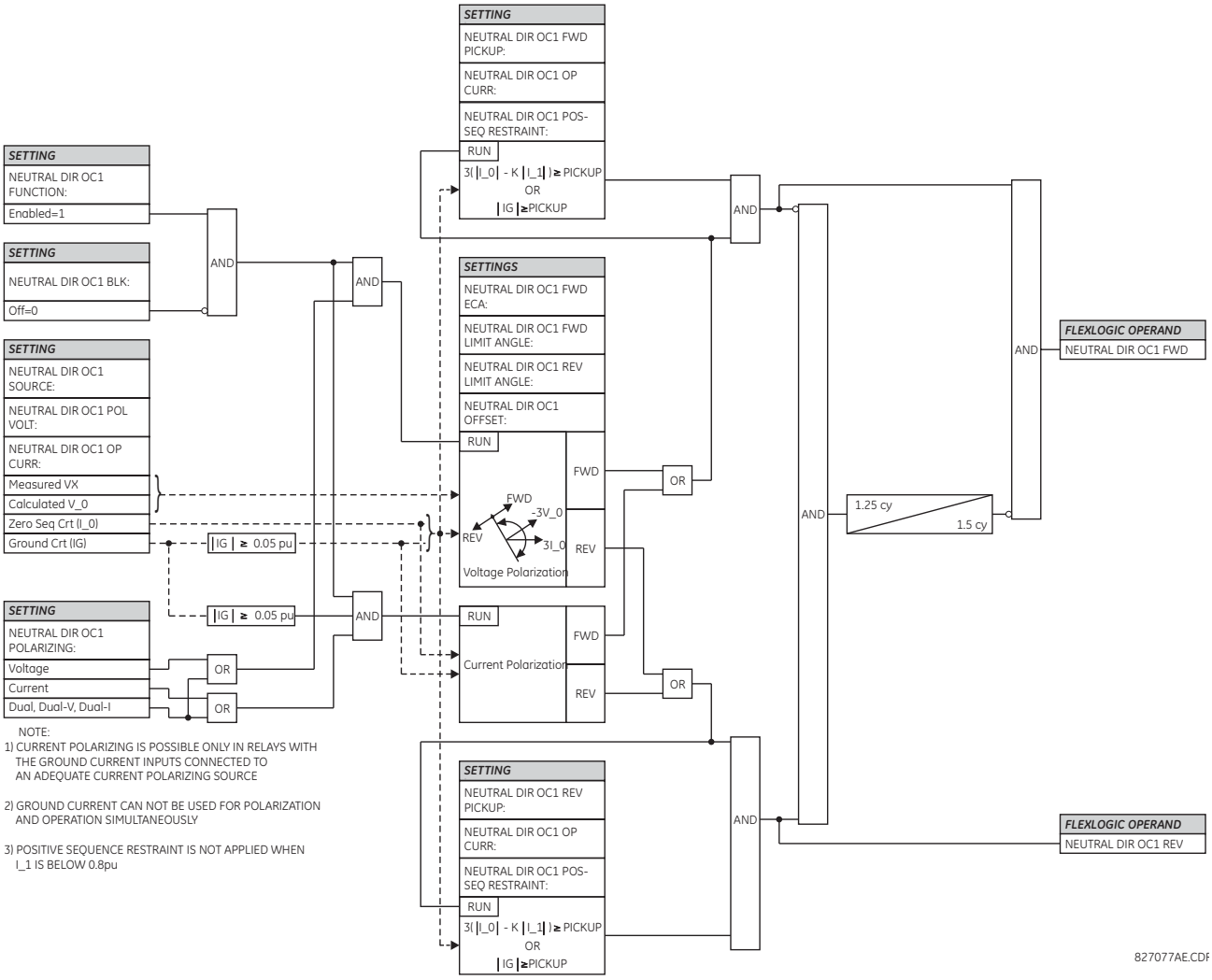

5.7.6 Wattmetric ground fault

5.7.6.1 Wattmetric zero-sequence directional (ANSI 32N, IEC PSDE)

SETTINGS ⇨⇩ GROUPED ELEMENTS ⇨ SETTING GROUP 1(6) ⇨ WATTMETRIC... ⇨⇩ WATTMETRIC GROUND FAULT 1(2)

■ WATTMETRIC ■ GROUND FAULT 1	⇔	**WATTMETRIC GND FLT 1 FUNCTION: Disabled**	Range: Disabled, Enabled
	⇳	**WATTMETRIC GND FLT 1 SOURCE: SRC 1**	Range: SRC 1, SRC 2, SRC 3, SRC 4
	⇳	**WATTMETRIC GND FLT 1 VOLT: Calculated VN**	Range: Calculated VN, Measured VX
	⇳	**WATTMETRIC GND FLT 1 OV PKP: 0.20 pu**	Range: 0.02 to 3.00 pu in steps of 0.01
	⇳	**WATTMETRIC GND FLT 1 CURR: Calculated IN**	Range: Calculated IN, Measured IG
	⇳	**WATTMETRIC GND FLT 1 OC PKP: 0.060 pu**	Range: 0.002 to 30.000 pu in steps of 0.001

⇳	**WATTMETRIC GND FLT 1 OC PKP DEL: 0.20 s**	Range: 0.00 to 600.00 s in steps of 0.01
⇳	**WATTMETRIC GND FLT 1 PWR PKP: 0.100 pu**	Range: 0.001 to 1.200 pu in steps of 0.001
⇳	**WATTMETRIC GND FLT 1 REF PWR: 0.500 pu**	Range: 0.001 to 1.200 pu in steps of 0.001
⇳	**WATTMETRIC GND FLT 1 ECA: 0° Lag**	Range: 0 to 360° Lag in steps of 1
⇳	**WATTMETRIC GND FLT 1 PWR PKP DEL: 0.20 s**	Range: 0.00 to 600.00 s in steps of 0.01
⇳	**WATTMETRIC GND FLT 1 CURVE: Definite Time**	Range: Definite Time, Inverse, FlexCurves A through D
⇳	**WATTMETRIC GND FLT 1 MULTIPLIER: 1.00 s**	Range: 0.01 to 2.00 s in steps of 0.01
⇳	**WATT GND FLT 1 BLK: Off**	Range: FlexLogic operand
⇳	**WATTMETRIC GND FLT 1 TARGET: Self-reset**	Range: Self-reset, Latched, Disabled
⇧	**WATTMETRIC GND FLT 1 EVENTS: Disabled**	Range: Disabled, Enabled

The wattmetric zero-sequence directional element responds to power derived from zero-sequence voltage and current in a direction specified by the element characteristic angle. The angle can be set within all four quadrants, and the power can be active or reactive. Therefore, the element can be used to sense either forward or reverse ground faults in either inductive, capacitive, or resistive networks. The inverse time characteristic allows time coordination of elements across the network.

Typical applications include ground fault protection in solidly grounded transmission networks, grounded/ungrounded/resistor-grounded/resonant-grounded distribution networks, or for directionalizing other non-directional ground elements.

WATTMETRIC GND FLT 1 VOLT — The element uses neutral voltage (that is, three times the zero-sequence voltage). This setting allows selecting between the internally calculated neutral voltage or the externally supplied voltage (broken delta VT connected to the auxiliary channel bank of the relay). When the latter selection is made, the auxiliary channel must be identified by the user as a neutral voltage under the VT bank settings. This element operates when the auxiliary voltage is configured as neutral.

WATTMETRIC GND FLT 1 OV PKP — This setting specifies the minimum zero sequence voltage supervising the directional power measurement. Set this threshold higher than possible unbalance during normal operation of the system. Typically, this setting is at 0.1 to 0.2 pu for the ungrounded or resonant grounded systems and at 0.05 to 0.1 pu for solidly or resistor-grounded systems. When using externally supplied voltage via the auxiliary voltage channel, 1 pu is the nominal voltage of this channel as per VT bank settings. When using internally calculated neutral voltage, 1 pu is the nominal phase to ground voltage as per the VT bank settings.

WATTMETRIC GND FLT 1 CURR — The element responds to the neutral current (that is, three times zero-sequence current), either calculated internally from the phase currents or supplied externally via the ground CT input from more accurate sources such as the core balanced CT. This setting allows selecting the source of the operating current.

WATTMETRIC GND FLT 1 OC PKP — This setting specifies the current supervision level for the measurement of the zero-sequence power.

WATTMETRIC GND FLT 1 OC PKP DEL — This setting specifies delay for the overcurrent portion of this element. The delay applies to the WATTMETRIC 1 PKP operand driven from the overcurrent condition.

WATTMETRIC GND FLT 1 PWR PKP — This setting specifies the operating point of the element. A value of 1 pu is a product of the 1 pu voltage as specified for the overvoltage condition of this element, and 1 pu current as specified for the overcurrent condition of this element.

WATTMETRIC GND FLT 1 REF PWR — This setting is used to calculate the inverse time characteristic delay (defined by S_{ref} in the following equations). A value of 1 pu represents the product of a 1 pu voltage (as specified in the overvoltage condition for this element) and a 1 pu current (as specified in the overcurrent condition for this element.

WATTMETRIC GND FLT 1 ECA — This setting adjusts the maximum torque angle of the element. The operating power is calculated as:

$$S\_op = Re(V_n(I_n \times 1\angle ECA)^*) \quad \textbf{Eq. 5-19}$$

where

* indicates complex conjugate

By varying the element characteristic angle (ECA), the element can be made to respond to forward or reverse direction in inductive, resistive, or capacitive networks as shown in the Wattmetric Characteristic Angle Response diagram.

WATTMETRIC GND FLT 1 PWR PKP DEL — This setting defines a definite time delay before the inverse time characteristic is activated. If the curve selection is set as "Definite Time", the element operates after this security time delay. If the curve selection is "Inverse" or one of the FlexCurves, the element uses both the definite and inverse time timers simultaneously. The definite time timer, specified by this setting, is used and when expires it releases the inverse time timer for operation (torque control).

WATTMETRIC GND FLT 1 CURVE — Choose one of three methods to delay the operate signal once all conditions are met to discriminate fault direction.

The "Definite Time" selection allows for a fixed time delay defined by the **WATTMETRIC GND FLT 1 PWR PKP DEL** setting.

The "Inverse" selection allows for inverse time characteristics delay defined by the following formula:

$$t = m \times \frac{S_{ref}}{S_{op}} \quad \textbf{Eq. 5-20}$$

where

m is a multiplier defined by the multiplier setting
S_{ref} is the multiplier setting
S_{op} is the operating power at the time

This timer starts after the definite time timer expires.

The four FlexCurves allow for custom user-programmable time characteristics. When working with FlexCurves, the element uses the operate to pickup ratio, and the multiplier setting is not applied:

$$t = \text{FlexCurve}\left(\frac{S_{op}}{S_{ref}}\right) \quad \textbf{Eq. 5-21}$$

Again, the FlexCurve timer starts after the definite time timer expires.

Figure 5-100: Wattmetric characteristic angle response

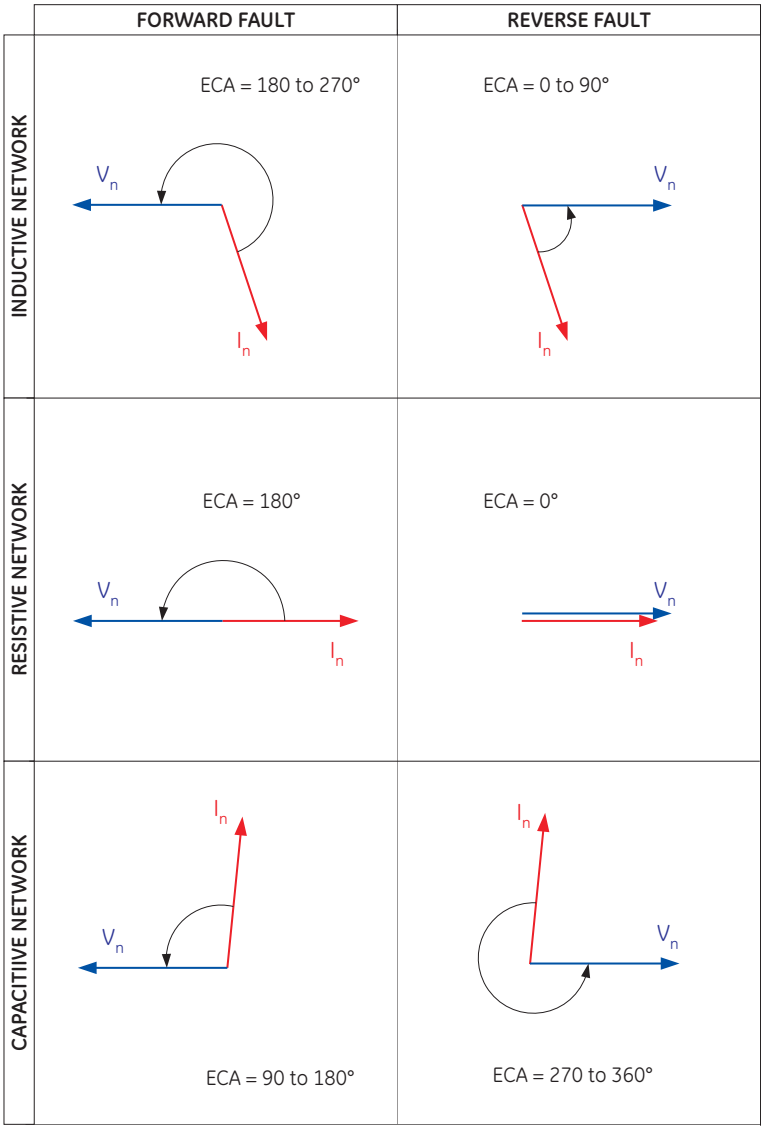

WATTMETRIC GND FLT 1 MULTIPLIER — This setting is applicable if the **WATTMETRIC GND FLT 1 CURVE** is set to Inverse and defines the multiplier factor for the inverse time delay.

Figure 5-101: Wattmetric zero-sequence directional logic

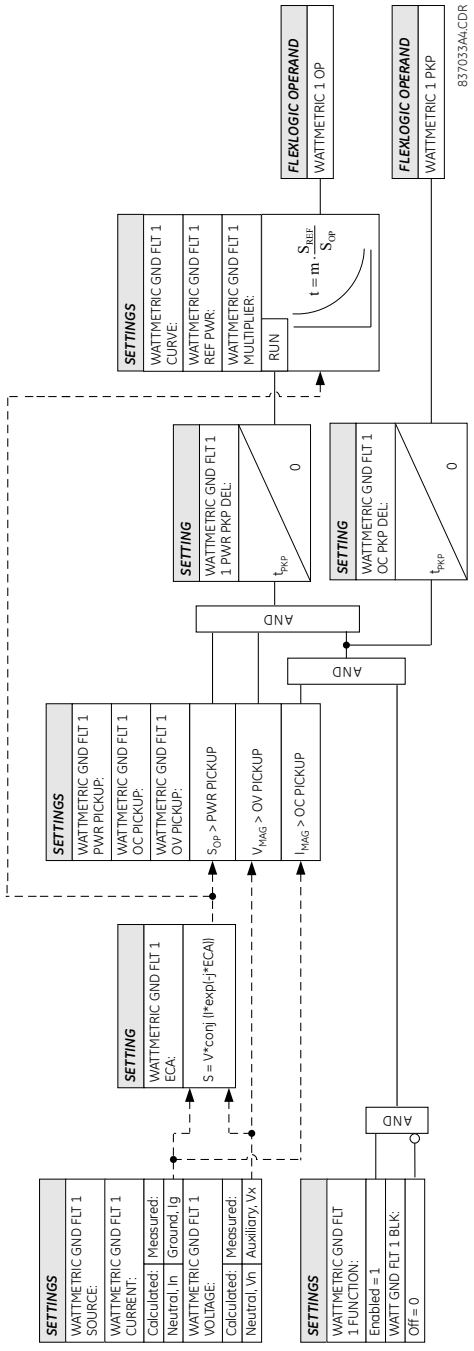

5.7.7 Ground current

5.7.7.1 Menu

SETTINGS ⇨⇩ GROUPED ELEMENTS ⇨ SETTING GROUP 1(6) ⇨⇩ GROUND CURRENT

■ GROUND CURRENT ■	⇔	■ GROUND TOC1 ■	See below

⇩

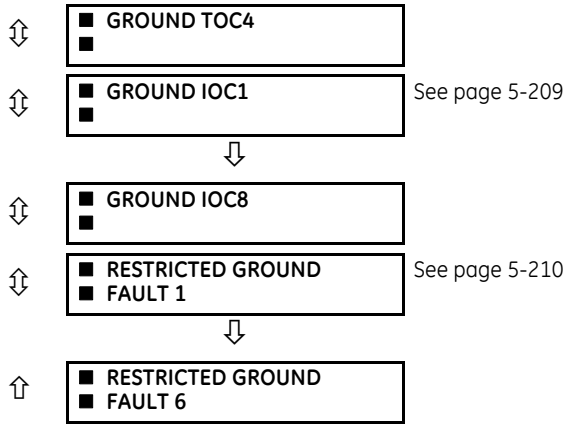

For information on the Ground Time Overcurrent curves, see the Inverse Time Overcurrent Characteristics section earlier.

5.7.7.2 Ground time overcurrent (ANSI 50G, IEC PIOC)

SETTINGS ⇨⇩ GROUPED ELEMENTS ⇨ SETTING GROUP 1(6) ⇨⇩ GROUND CURRENT ⇨ GROUND TOC1(4)

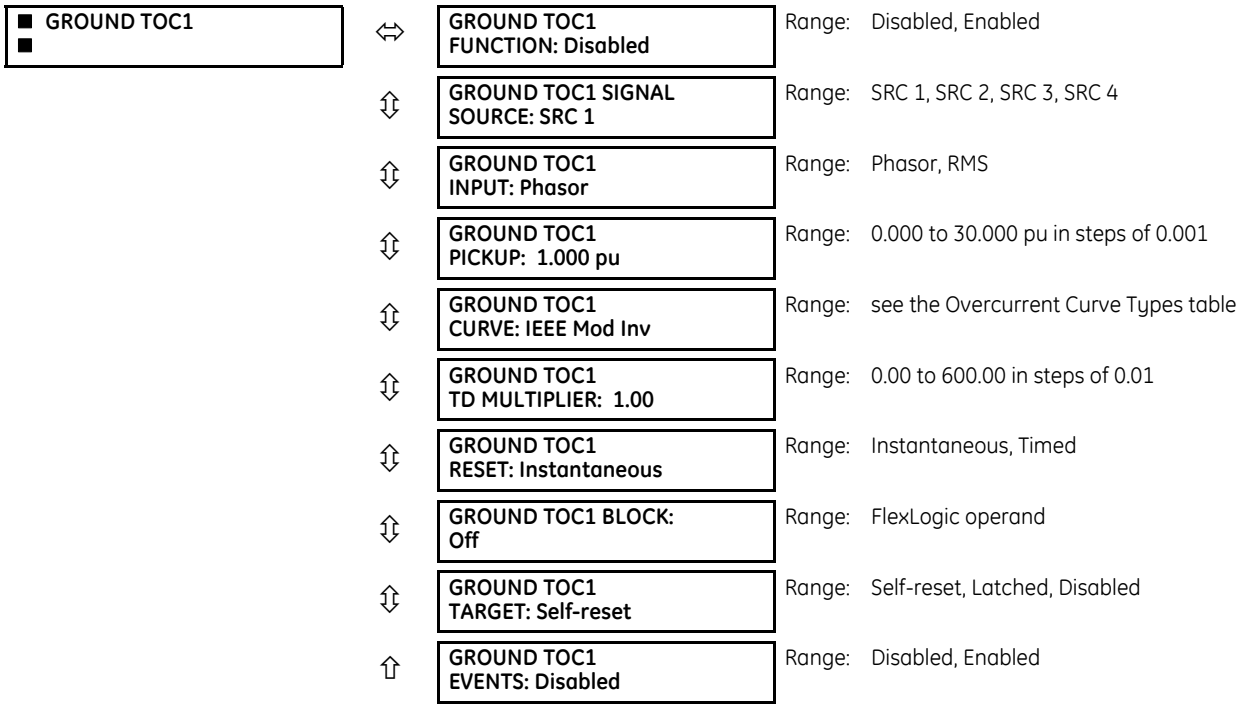

This element can provide a required time-delay operating characteristic versus the applied current or be used as a simple definite time element. The ground current input value is the quantity measured by the ground input CT and is the fundamental phasor or RMS magnitude. Two methods of resetting operation are available: "Timed" and "Instantaneous" (see the Inverse TOC Curve Characteristics section for details). When the element is blocked, the time accumulator resets according to the reset characteristic. For example, if the element reset characteristic is set to "Instantaneous" and the element is blocked, the time accumulator clears immediately.

GROUND TOC1 FUNCTION — This setting enables and disables the ground time overcurrent protection element.

GROUND TOC1 SIGNAL SOURCE — This setting selects the signal source for the ground time overcurrent protection element.

GROUND TOC1 INPUT — This setting selects how ground current input quantities are interpreted by the F60. Inputs can be selected as fundamental phasor magnitudes or total waveform RMS magnitudes as required by the application.

GROUND TOC1 PICKUP — This setting specifies the ground time overcurrent pickup level in per-unit values.

GROUND TOC1 CURVE — This setting selects the inverse time overcurrent curve style.

GROUND TOC1 TD MULTIPLIER — This setting specifies a multiple of the base curve shape specified by the **CURVE** setting. Programming this value to zero results in an instantaneous response to all current levels above pickup.

GROUND TOC1 RESET — The "Instantaneous" reset method is intended for applications with other relays, such as most static relays, which set the energy capacity directly to zero when the current falls below the reset threshold. The "Timed" reset method can be used where the relay must coordinate with electromechanical relays.

GROUND TOC1 BLOCK — Assertion of the operand assigned to this setting blocks operation of the ground time overcurrent element.

GROUND TOC1 EVENTS — This setting enables and disables the logging of ground time overcurrent events in the sequence of events recorder.

NOTE

These elements measure the current that is connected to the ground channel of a CT/VT module. The conversion range of a standard channel is from 0.02 to 46 times the CT rating.

NOTE

This channel can be also equipped with a sensitive input. The conversion range of a sensitive channel is from 0.002 to 4.6 times the CT rating.

Figure 5-102: Ground TOC1 logic

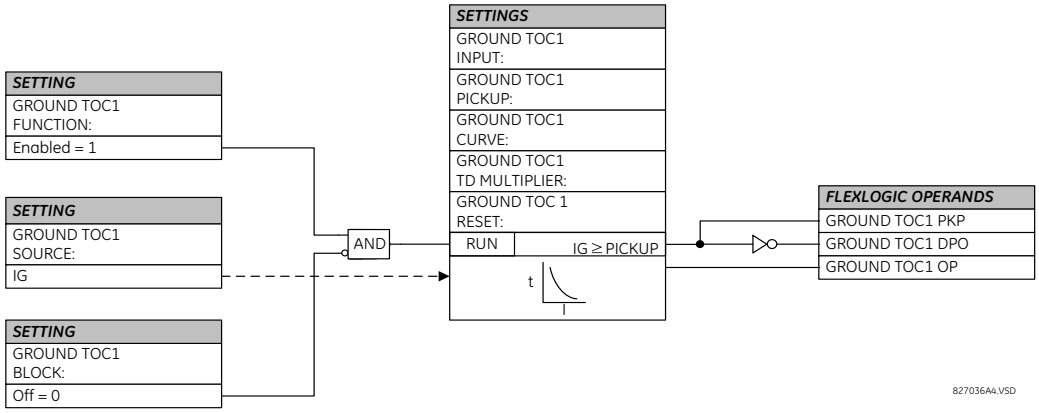

5.7.7.3 Ground instantaneous overcurrent (ANSI 50G, IEC PIOC)

SETTINGS ⇨⇩ GROUPED ELEMENTS ⇨ SETTING GROUP 1(6) ⇨⇩ GROUND CURRENT ⇨⇩ GROUND IOC1(8)

■ GROUND IOC1 ■	⇔	**GROUND IOC1 FUNCTION: Disabled**	Range: Disabled, Enabled
	⇳	**GROUND IOC1 SIGNAL SOURCE: SRC 1**	Range: SRC 1, SRC 2, SRC 3, SRC 4
	⇳	**GROUND IOC1 PICKUP: 1.000 pu**	Range: 0.000 to 30.000 pu in steps of 0.001
	⇳	**GROUND IOC1 PICKUP DELAY: 0.00 s**	Range: 0.00 to 600.00 s in steps of 0.01
	⇳	**GROUND IOC1 RESET DELAY: 0.00 s**	Range: 0.00 to 600.00 s in steps of 0.01
	⇳	**GROUND IOC1 BLOCK: Off**	Range: FlexLogic operand

⇳	**GROUND IOC1 TARGET: Self-reset**	Range: Self-reset, Latched, Disabled
⇧	**GROUND IOC1 EVENTS: Disabled**	Range: Disabled, Enabled

The ground instantaneous overcurrent element can be used as an instantaneous element with no intentional delay or as a definite time element. The ground current input is the quantity measured by the ground input CT and is the fundamental phasor magnitude.

NOTE

These elements measure the current that is connected to the ground channel of a CT/VT module. The conversion range of a standard channel is from 0.02 to 46 times the CT rating.

NOTE

This channel can be equipped with a standard or sensitive input. The conversion range of a sensitive channel is from 0.002 to 4.6 times the CT rating.

Figure 5-103: Ground IOC1 logic

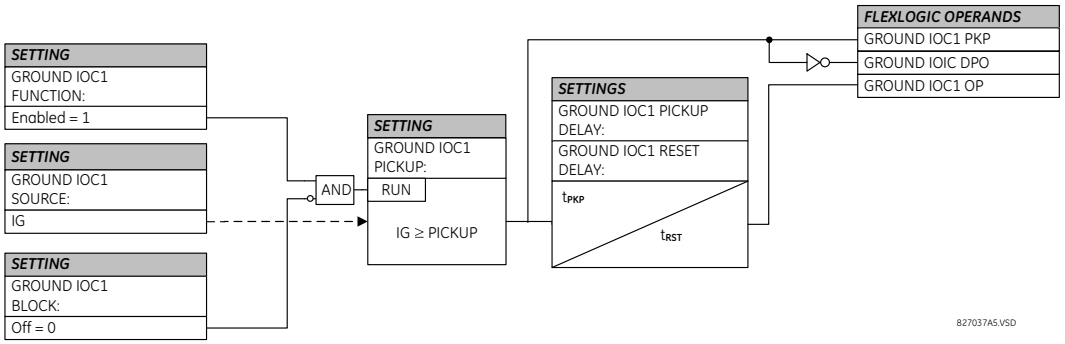

5.7.7.4 Restricted ground fault (ANSI 87RGF, IEC PNDF)

SETTINGS ⇨⇩ GROUPED ELEMENTS ⇨ SETTING GROUP 1(6) ⇨⇩ GROUND CURRENT ⇨⇩ RESTRICTED GROUND FAULT 1(6)

■ RESTRICTED GROUND ■ FAULT 1	⇔	**RESTD GND FT1 FUNCTION: Disabled**	Range: Disabled, Enabled
	⇳	**RESTD GND FT1 SOURCE: SRC 1**	Range: SRC 1, SRC 2, SRC 3, SRC 4
	⇳	**RESTD GND FT1 PICKUP: 0.080 pu**	Range: 0.005 to 30.000 pu in steps of 0.001
	⇳	**RESTD GND FT1 SLOPE: 40%**	Range: 0 to 100% in steps of 1
	⇳	**RESTD GND FT1 PICKUP DELAY: 0.00 s**	Range: 0.00 to 600.00 s in steps of 0.01
	⇳	**RESTD GND FT1 RESET DELAY: 0.00 s**	Range: 0.00 to 600.00 s in steps of 0.01
	⇳	**RESTD GND FT1 BLOCK: Off**	Range: FlexLogic operand
	⇧	**RESTD GND FT1 TARGET: Self-reset**	Range: Self-reset, Latched, Disabled

Restricted ground fault (RGF) protection provides sensitive ground fault detection for low-magnitude fault currents, primarily faults close to the neutral point of a wye-connected winding. An internal ground fault on an impedance grounded wye winding produces a fault current dependent on the ground impedance value and the fault position on the winding with respect to the neutral point. The resultant primary current is negligible for faults on the lower 30% of the winding since the fault voltage is not the system voltage, but rather the result of the transformation ratio between the primary windings and the percentage of shorted turns on the secondary. Therefore, the resultant differential currents can be below the slope threshold of the main differential element and the fault can go undetected. Application of the restricted ground fault protection extends the coverage towards the neutral point (see the following figure).

Figure 5-104: RGF and percent differential zones of protection

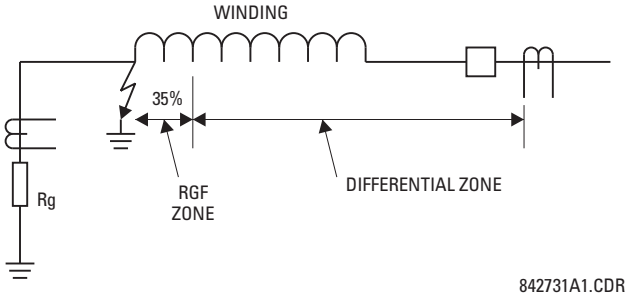

This protection is often applied to transformers having impedance-grounded wye windings. The element can also be applied to the stator winding of a generator having the neutral point grounded with a CT installed in the grounding path, or the ground current obtained by external summation of the neutral-side stator CTs. The following figure shows the basic application and wiring rules.

Figure 5-105: Typical applications of RGF protection

(a) Transformer Winding

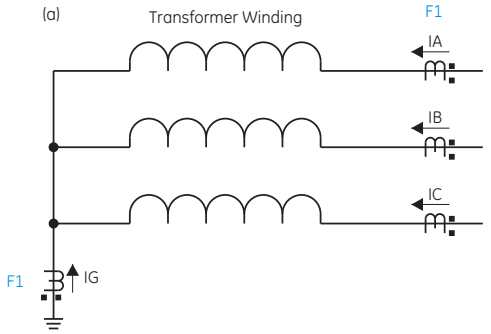

PARAMETER	SOURCE 1
Name	RGF
Phase CT	F1
Ground CT	F1
Phase VT	None
Aux VT	None

(c) Stator Winding

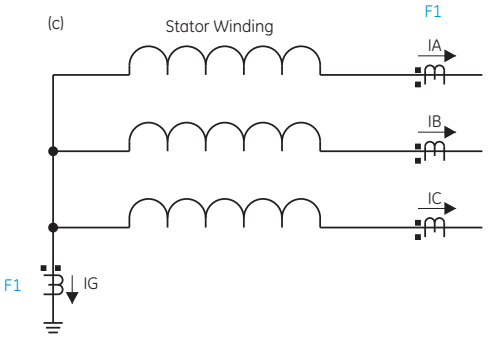

PARAMETER	SOURCE 1
Name	RGF
Phase CT	F1
Ground CT	F1
Phase VT	None
Aux VT	None

(b) Transformer Winding

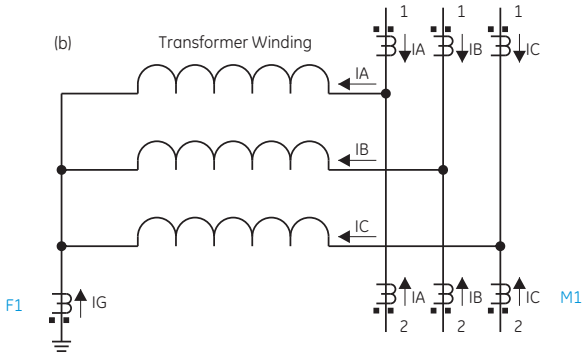

PARAMETER	SOURCE 1
Name	RGF
Phase CT	F1+M1
Ground CT	F1
Phase VT	None
Aux VT	None

(d) Stator Winding

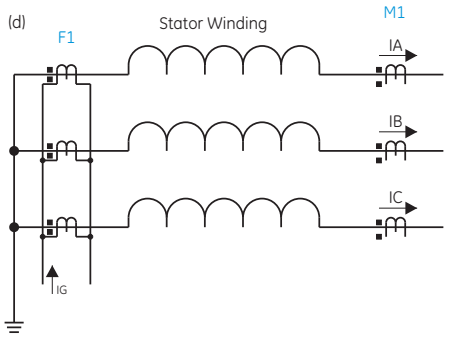

PARAMETER	SOURCE 1
Name	RGF
Phase CT	M1
Ground CT	F1
Phase VT	None
Aux VT	None

(e) Autotransformer Winding

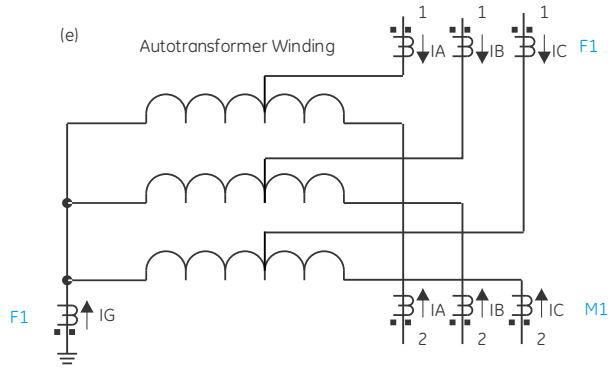

PARAMETER	SOURCE 1
Name	RGF
Phase CT	F1+M1
Ground CT	F1
Phase VT	None
Aux VT	None

842732A2.CDR

The next figures show distribution of the ground fault current through the grounded neutral point of the wye winding and primary delta winding as a function of the fault location as a percentage of the whole wye winding. Magnitude of the transformer winding fault is controlled by several factors, such as supply source impedance, wye winding neutral grounding impedance, transformer leakage reactance, fault voltage windings connection and position of the fault on the winding with respect to the neutral point.

Figure 5-106: Fault current through transformer neutral against primary current (left is resistance-ground neutral, right is solidly grounded neutral)

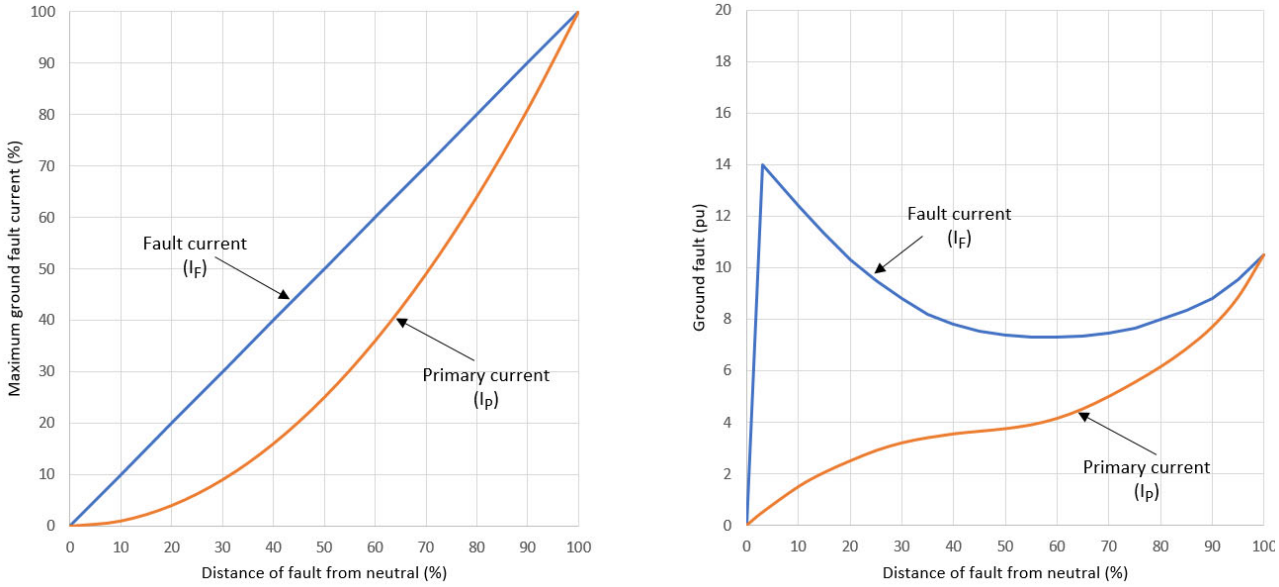

Figure 5-107: Fault current through transformer neutral against primary current (winding current flow during ground fault)

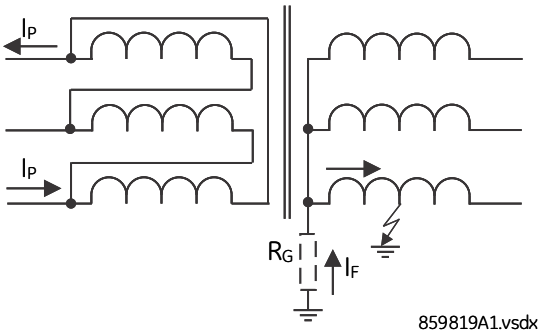

The settings are as follows.

RESTD GND FT1 SOURCE — Identifies the signal source for the restricted ground fault (RGF) function. It is important that source includes a set of three-phase CTs on the line side of the wye winding of the transformer assigned to the Phase CT setting of this source and a neutral point CT assigned to the Ground CT setting of this source. In case of more breaker-and-a-half connections on the line side of the transformer or autotransformer application, Phase CT arrangement need to include the sum of CT banks contributing to the differential signal. When the summed CTs have a different ratio, the relay automatically re-scales to the maximum CT primary nominal value.

RESTD GND FT1 PICKUP — Defines the minimum ground differential current required for operation. The relay automatically matches the CT ratios between the phase and ground CTs by re-scaling the ground CT to the phase CT level, which becomes a base value for the differential and restraint currents. For example, for 10 MVA, 33 kV to 11 kV transformer, 10% impedance, D / Y-1, R_G = 6.3Ω, with Phase CT ratio = 600 / 1 A.

Maximum phase-to-ground fault current IG_{MAX} = 11 kV / ($\sqrt{3}$ × 6.3Ω) = 1000 A primary.

For a winding fault point at 5% distance from the neutral:

IG_{PKP} = 0.05 × IG_{MAX} = 0.05 × 1000 = 50 A primary. The pickup setting is chosen as PKP = 50 A / 600 A = 0.083 pu

Note that for correct operation of the element, the **CURRENT CUTOFF** setting under Display Properties has to be set at least two times less than the **PICKUP** setting.

RESTD GND FT1 SLOPE — Defines the restrain characteristics for this element. Set the slope to provide extra restraint for external faults, but not prevent operation for the winding fault during heavy transformer load. Transformer nominal winding current is $I_{N(W)}$ = 10 MVA / ($\sqrt{3}$ × 11 kV) = 525 A = 525 A / 600 A = 0.875 pu. Considering that RGF algorithm restraint is defined by the positive-sequence current during load, and for currents below 2 pu restraint is equal to I1/8, slope can be estimated as follows:

Slope = PKP / (1.2 × $I_{N(W)}$ / 8) × 100% = 0.083 pu / (1.2 × 0.875 / 8) × 100% = 63%

where 1.2 factor accounts for 20% temporary overload of the transformer

Because the final slope has to be set lower than this calculated value to have some safety margin, the final setting can be selected as 43%.

RESTD GND FT1 PICKUP DELAY — Defines element delay from the pickup to assertion of the RESTD GND FT1 OP operand.

RESTD GND FT1 RESET DELAY — Defines how long the RESTD GND FT1 OP operand stays asserted after pickup conditions disappear.

5

The relay incorporates low-impedance restricted ground fault protection. This low-impedance form of protection faces potential stability problems. An external phase-to-phase fault is an ultimate case. Ideally, there is neither ground (IG) nor neutral (IN = IA + IB + IC) current present. If one or more of the phase CTs saturate, a spurious neutral current is seen by the relay. This is similar to a single infeed situation and can be mistaken for an internal fault. Similar difficulties occur in a breaker-and-a-half application of the restricted ground fault, where any through fault with a weak infeed from the winding itself can cause problems.

The UR uses a novel definition of the restraining signal to cope with the above stability problems while providing fast and sensitive protection. Even with the improved definition of the restraining signal, the breaker-and-a-half application of the restricted ground fault must be approached with care, and is not recommended unless the settings are carefully selected to avoid maloperation due to CT saturation.

The differential current is produced as an unbalance current between the ground current of the neutral CT (IG) and the neutral current derived from the phase CTs (IN = IA + IB + IC):

$$Igd = |IG + IN| = |IG + IA + IB + IC| \quad \textbf{Eq. 5-22}$$

The restraining signal ensures stability of protection during CT saturation conditions and is produced as a maximum value among three components related to zero, negative, and positive-sequence currents of the three phase CTs as follows:

$$Irest = \max(IR0, IR1, IR2) \quad \textbf{Eq. 5-23}$$

The zero-sequence component of the restraining signal (IR0) is meant to provide maximum restraint during external ground faults, and therefore is calculated as a vectorial difference of the ground and neutral currents:

$$IR0 = |IG - IN| = |IG - (IA + IB + IC)| \quad \textbf{Eq. 5-24}$$

The equation above brings an advantage of generating the restraining signal of twice the external ground fault current, while reducing the restraint below the internal ground fault current. The negative-sequence component of the restraining signal (IR2) is meant to provide maximum restraint during external phase-to-phase faults and is calculated as follows:

$$IR2 = |I\_2| \quad \text{or} \quad IR2 = 3 \times |I\_2| \quad \textbf{Eq. 5-25}$$

Following complete de-energization of the windings (all three phase currents below 5% of nominal for at least five cycles), the relay uses a multiplier of 1 in preparation for the next energization. The multiplier of 3 is used during normal operation; that is, two cycles after the winding has been energized. The lower multiplier is used to ensure better sensitivity when energizing a faulty winding.

The positive-sequence component of the restraining signal (IR1) is adaptive and provides restraint during symmetrical conditions, either symmetrical faults or load.

Additionally, the algorithm detects a long-lasting DC during energization, which can saturate line CTs and increase IR1. Long lasting DC in phase A (same in other two phases) is estimated with the following condition:

$$DC\_A = |I\_A_{RMS} - 9 \times I\_A_{MAG} / 8| > 0 \quad \textbf{Eq. 5-26}$$

When this condition is satisfied in any phase for three cycles, DC_{ACTIVE} is set and is reset in 60 cycles once the condition disappears. Overall IR1 is calculated according to the following algorithm:

IF $|I\_1| > 2$ pu AND $|I\_1| > |I\_0|$, THEN IR1 = $3 \times (I\_1_{MAG} - I\_0_{MAG})$

IF DC_{ACTIVE} THEN IR1 = $I\_1_{MAG} / 2$

OTHERWISE IR1 = $I\_1_{MAG} / 8$

During an external fault involving ground when positive-sequence current exceeds 200% of the phase CT nominal and positive-sequence current exceeds zero-sequence current, IR1 restraint is set to the maximum value. During energization with the long-lasting DC, IR1 is set to half of the positive-sequence current to ensure extra restraint. If none of two conditions are present, then IR1 is set to the minimum value of the 1/8 of the positive-sequence current to ensure sensitivity during load conditions.

The raw restraining signal (Irest) is further post-filtered for better performance during external faults with heavy CT saturation and for better switch-off transient control:

$$Igr(k) = \max(Irest(k), \alpha \times Igr(k-1)) \quad \textbf{Eq. 5-27}$$

where

k represents a present sample
k – 1 represents the previous sample
α is a factory constant ($\alpha < 1$)

The equation above introduces a decaying memory to the restraining signal. Should the raw restraining signal (Irest) disappear or drop significantly, such as when an external fault gets cleared or a CT saturates heavily, the actual restraining signal (Igr(k)) does not reduce instantly but keeps decaying decreasing its value by 50% each 15.5 power system cycles.

For additional security, the element applies a ground current of the transformer neutral CT (IG) supervision by allowing element pickup and operation when the IG magnitude is above 0.8 x Pickup setting.

Having the differential and restraining signals developed, the element applies a single slope differential characteristic with a minimum pickup as shown in the following logic diagram.

Figure 5-108: Restricted ground fault logic

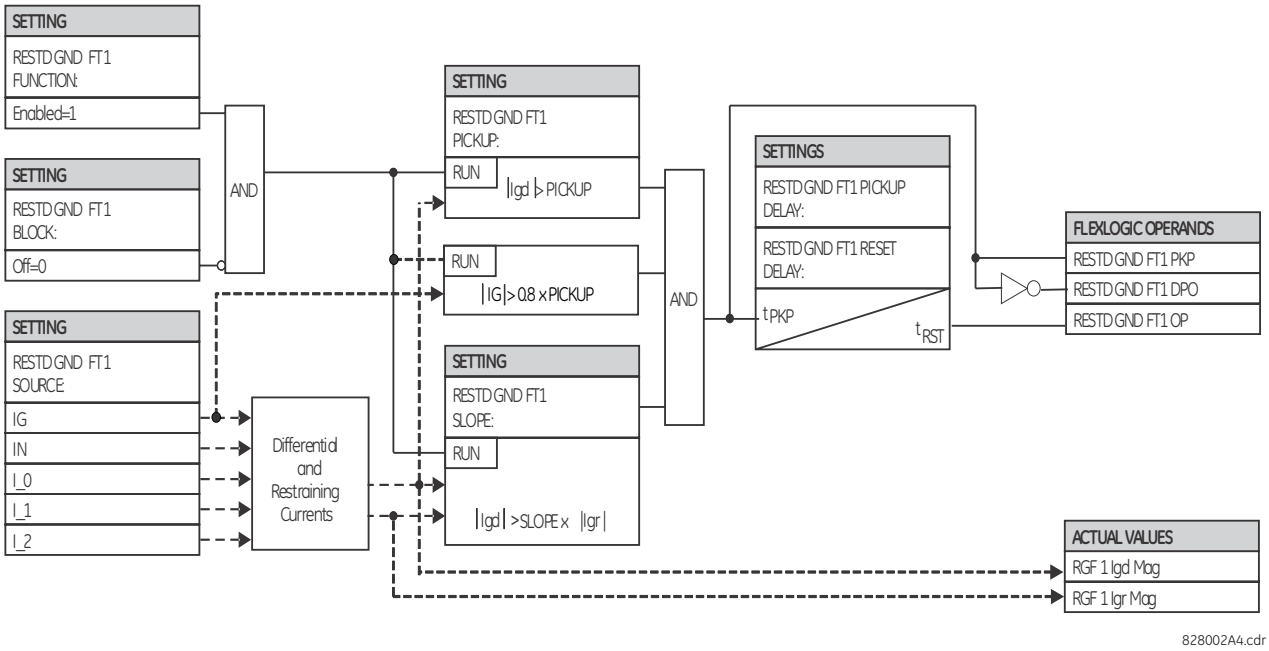

5

The following examples explain how the restraining signal is created for maximum sensitivity and security. These examples clarify the operating principle and provide guidance for testing of the element.

Example 1: External single-line-to-ground fault

Given the following inputs: IA = 1 pu ∠0°, IB = 0, IC = 0, and IG = 1 pu ∠180°

The relay calculates the following values:

$$Igd = 0,\ IR0 = abs\left(3 \times \frac{1}{3} - (-1)\right) = 2\ pu,\ IR2 = 3 \times \frac{1}{3} = 1\ pu,\ IR1 = \frac{1/3}{8} = 0.042\ pu,\ \text{and } Igr = 2\ pu$$

The restraining signal is twice the fault current. This gives extra margin if the phase or neutral CT saturates.

Example 2: External high-current SLG fault

Given the following inputs: IA = 10 pu ∠0°, IB = 0, IC = 0, and IG = 10 pu ∠–180°

The relay calculates the following values:

$$Igd = 0,\ IR0 = abs\left(3 \times \frac{1}{3} - (-10)\right) = 20\ pu,\ IR2 = 3 \times \frac{10}{3} = 10\ pu,\ IR1 = 3 \times \left(\frac{10}{3} - \frac{10}{3}\right) = 0,\ \text{and } Igr = 20\ pu.$$

Example 3: External high-current three-phase symmetrical fault

Given the following inputs: IA = 10 pu ∠0°, IB = 10 pu ∠–120°, IC = 10 pu ∠120°, and IG = 0 pu

The relay calculates the following values:

$$Igd = 0,\ IR0 = abs(3 \times 0 - (0)) = 0\ pu,\ IR2 = 3 \times 0 = 0\ pu,\ IR1 = 3 \times \left(\frac{10}{3} - 0\right) = 10\ pu,\ \text{and } Igr = 10\ pu.$$

Example 4: Internal low-current single-line-to-ground fault under full load

Given the following inputs: IA = 1.10 pu ∠0°, IB = 1.0 pu ∠–120°, IC = 1.0 pu ∠120°, and IG = 0.05 pu ∠0°

The relay calculates the following values:

I_0 = 0.033 pu ∠0°, I_2 = 0.033 pu ∠0°, and I_1 = 1.033 pu ∠0°

Igd = abs(3 × 0.0333 + 0.05) = 0.15 pu, IR0 = abs(3 × 0.033 – (0.05)) = 0.05 pu, IR2 = 3 × 0.033 = 0.10 pu, IR1 = 1.033 / 8 = 0.1292 pu, and Igr = 0.1292 pu

Despite very low fault current level, the differential current is above 100% of the restraining current.

5.7.8 Negative sequence current

5.7.8.1 Menu

SETTINGS ⇨⇩ GROUPED ELEMENTS ⇨⇩ SETTING GROUP 1(6) ⇨⇩ NEGATIVE SEQUENCE CURRENT

■ NEGATIVE SEQUENC ■ CURRENT	⇔	■ NEG SEQ TOC1 ■	See below
	⇳	■ NEG SEQ TOC2 ■	
	⇳	■ NEG SEQ IOC1 ■	See page 5-218
	⇳	■ NEG SEQ IOC2 ■	
	⇳	■ NEG SEQ DIR OC1 ■	See page 5-219
	⇳	■ NEG SEQ DIR OC2 ■	

The F60 provides two negative-sequence time overcurrent elements, two negative-sequence instantaneous overcurrent elements, and two negative-sequence directional overcurrent elements. For information on the negative sequence time overcurrent curves, see the Inverse TOC Curve Characteristics section earlier.

5.7.8.2 Negative sequence time overcurrent (ANSI 51Q, IEC PTOC)

SETTINGS ⇨⇩ GROUPED ELEMENTS ⇨ SETTING GROUP 1(6) ⇨⇩ NEGATIVE SEQUENCE CURRENT ⇨ NEG SEQ TOC1(2)

■ NEG SEQ TOC1 ■	⇔	NEG SEQ TOC1 FUNCTION: Disabled	Range: Disabled, Enabled
	⇳	NEG SEQ TOC1 SIGNAL SOURCE: SRC 1	Range: SRC 1, SRC 2, SRC 3, SRC 4
	⇳	NEG SEQ TOC1 PICKUP: 1.000 pu	Range: 0.000 to 30.000 pu in steps of 0.001
	⇳	NEG SEQ TOC1 CURVE: IEEE Mod Inv	Range: see Overcurrent Curve Types table
	⇳	NEG SEQ TOC1 TD MULTIPLIER: 1.00	Range: 0.00 to 600.00 in steps of 0.01
	⇳	NEG SEQ TOC1 RESET: Instantaneous	Range: Instantaneous, Timed
	⇳	NEG SEQ TOC1 BLOCK: Off	Range: FlexLogic operand
	⇳	NEG SEQ TOC1 TARGET: Self-reset	Range: Self-reset, Latched, Disabled

⇧	**NEG SEQ TOC1 EVENTS: Disabled**	Range: Disabled, Enabled

The negative-sequence time overcurrent element can be used to determine and clear unbalance in the system. The input for calculating negative-sequence current is the fundamental phasor value.

Two methods of resetting operation are available; "Timed" and "Instantaneous" (see the Inverse TOC Curve Characteristics section earlier for details on curve setup, trip times and reset operation). When the element is blocked, the time accumulator resets according to the reset characteristic. For example, if the element reset characteristic is set to "Instantaneous" and the element is blocked, the time accumulator clears immediately.

Figure 5-109: Negative sequence TOC1 logic

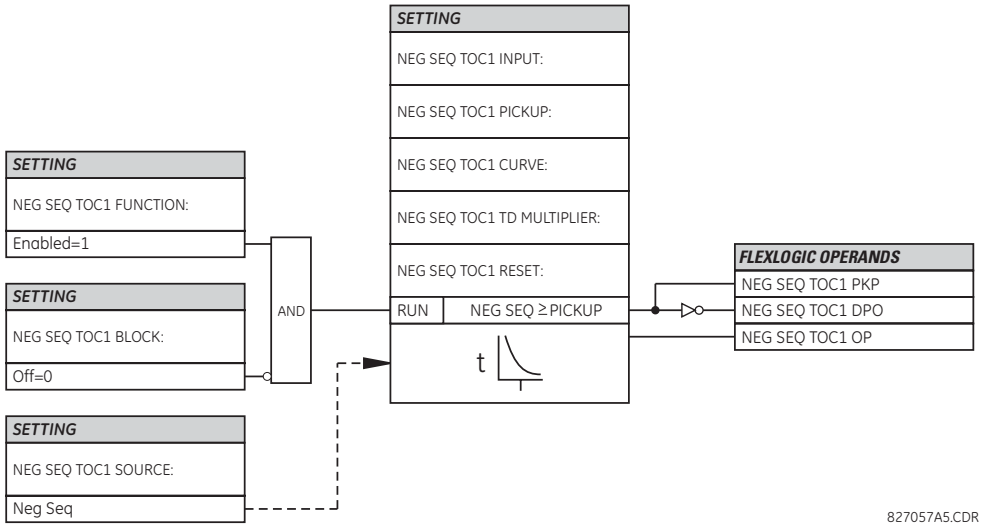

5.7.8.3 Negative sequence instantaneous overcurrent (ANSI 50Q, IEC PIOC)

SETTINGS ⇨⇩ GROUPED ELEMENTS ⇨ SETTING GROUP 1(6) ⇨⇩ NEGATIVE SEQUENCE CURRENT ⇨⇩ NEG SEQ OC1(2)

■ NEG SEQ IOC1 ■	⇔	**NEG SEQ IOC1 FUNCTION: Disabled**	Range: Disabled, Enabled
	⇩	**NEG SEQ IOC1 SIGNAL SOURCE: SRC 1**	Range: SRC 1, SRC 2, SRC 3, SRC 4
	⇩	**NEG SEQ IOC1 PICKUP: 1.000 pu**	Range: 0.000 to 30.000 pu in steps of 0.001
	⇩	**NEG SEQ IOC1 PICKUP DELAY: 0.00 s**	Range: 0.00 to 600.00 s in steps of 0.01
	⇩	**NEG SEQ IOC1 RESET DELAY: 0.00 s**	Range: 0.00 to 600.00 s in steps of 0.01
	⇩	**NEG SEQ IOC1 BLOCK: Off**	Range: FlexLogic operand
	⇩	**NEG SEQ IOC1 TARGET: Self-reset**	Range: Self-reset, Latched, Disabled
	⇧	**NEG SEQ IOC1 EVENTS: Disabled**	Range: Disabled, Enabled

The negative-sequence instantaneous overcurrent element can be used as an instantaneous function with no intentional delay or as a definite time function. The element responds to the negative-sequence current fundamental frequency phasor magnitude (calculated from the phase currents) and applies a positive-sequence restraint for better performance: a small portion (12.5%) of the positive-sequence current magnitude is subtracted from the negative-sequence current magnitude when forming the operating quantity.

$$I_{op} = |I\_2| - K \cdot |I\_1| \quad \text{where } K = 1/8 \qquad \textbf{Eq. 5-28}$$

The positive-sequence restraint allows for more sensitive settings by counterbalancing spurious negative-sequence currents resulting from

- System unbalances under heavy load conditions
- Transformation errors of current transformers (CTs) during three-phase faults
- Fault inception and switch-off transients during three-phase faults

The positive-sequence restraint must be considered when testing for pickup accuracy and response time (multiple of pickup). The operating quantity depends on how the test currents are injected into the relay (single-phase injection: $I_{op} = 0.2917 \cdot I_{injected}$; three-phase injection, opposite rotation: $I_{op} = I_{injected}$).

Figure 5-110: Negative sequence IOC1 logic

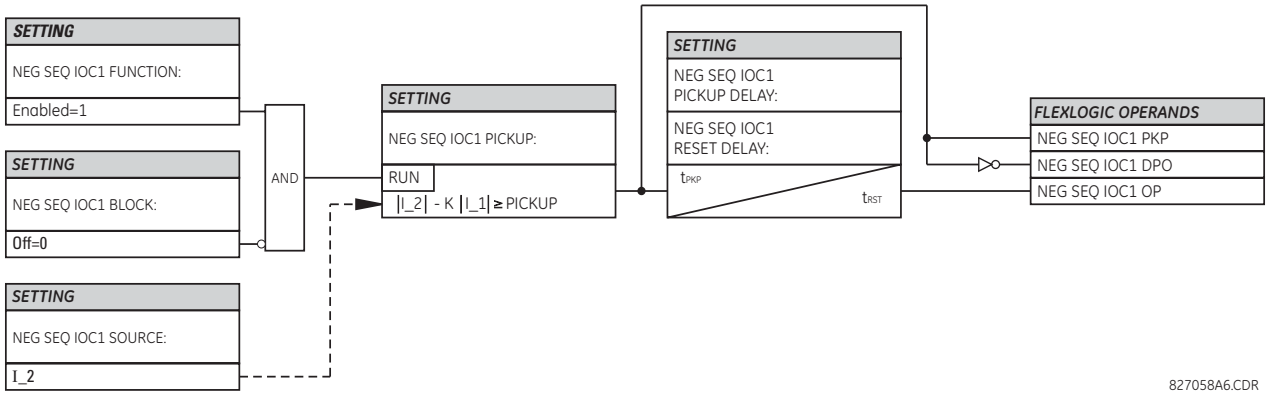

5.7.8.4 Negative sequence directional overcurrent (ANSI 67Q, IEC PDEF/PTOC)

SETTINGS ⇨⇩ GROUPED ELEMENTS ⇨ SETTING GROUP 1(6) ⇨⇩ NEGATIVE SEQUENCE CURRENT ⇨⇩ NEG SEQ DIR OC1(2)

■ NEG SEQ DIR OC1 ■	⇔	**NEG SEQ DIR OC1 FUNCTION: Disabled**	Range: Disabled, Enabled
	⇕	**NEG SEQ DIR OC1 SOURCE: SRC 1**	Range: SRC 1, SRC 2, SRC 3, SRC 4
	⇕	**NEG SEQ DIR OC1 OFFSET: 0.00 Ω**	Range: 0.00 to 250.00 ohms in steps of 0.01
	⇕	**NEG SEQ DIR OC1 TYPE: Neg Sequence**	Range: Neg Sequence, Zero Sequence
	⇕	**NEG SEQ DIR OC1 POS-SEQ RESTRAINT: 0.063**	Range: 0.000 to 0.500 in steps of 0.001
	⇕	**NEG SEQ DIR OC1 FWD ECA: 75° Lag**	Range: 0 to 90° Lag in steps of 1
	⇕	**NEG SEQ DIR OC1 FWD LIMIT ANGLE: 90°**	Range: 40 to 90° in steps of 1
	⇕	**NEG SEQ DIR OC1 FWD PICKUP: 0.050 pu**	Range: 0.015 to 30.000 pu in steps of 0.005

⇳	**NEG SEQ DIR OC1 REV LIMIT ANGLE: 90°**	Range: 40 to 90° in steps of 1
⇳	**NEG SEQ DIR OC1 REV PICKUP: 0.050 pu**	Range: 0.015 to 30.000 pu in steps of 0.005
⇳	**NEG SEQ DIR OC1 BLK: Off**	Range: FlexLogic operand
⇳	**NEG SEQ DIR OC1 TARGET: Self-reset**	Range: Self-reset, Latched, Disabled
⇧	**NEG SEQ DIR OC1 EVENTS: Disabled**	Range: Disabled, Enabled

There are two negative-sequence directional overcurrent protection elements available. The element provides both forward and reverse fault direction indications through its output operands NEG SEQ DIR OC1 FWD and NEG SEQ DIR OC1 REV, respectively. The output operand is asserted if the magnitude of the operating current is above a pickup level (overcurrent unit) and the fault direction is seen as forward or reverse, respectively (directional unit).

The overcurrent unit of the element essentially responds to the magnitude of a fundamental frequency phasor of either the negative-sequence or neutral current as per user selection.

A positive-sequence restraint is applied for better performance: a small user-programmable portion of the positive-sequence current magnitude is subtracted from the negative or zero-sequence current magnitude, respectively, when forming the element operating quantity.

$$I_{op} = |I\_2| - K \times |I\_1| \quad \text{or} \quad I_{op} = 3 \times (|I\_0| - K \times |I\_1|) \qquad \textbf{Eq. 5-29}$$

The positive-sequence restraint allows for more sensitive settings by counterbalancing spurious negative-sequence and zero-sequence currents resulting from

- System unbalances under heavy load conditions
- Transformation errors of current transformers (CTs)
- Fault inception and switch-off transients

The positive-sequence restraint must be considered when testing for pickup accuracy and response time (multiple of pickup). The positive-sequence restraint is removed for low currents. If the positive-sequence current is less than 0.8 pu, then the restraint is removed by changing the constant K to zero. This results in better response to high-resistance faults when the unbalance is very small and there is no danger of excessive CT errors, since the current is low.

The operating quantity depends on the way the test currents are injected into the F60. For single phase injection

- $I_{op} = ⅓ \times (1 - K) \times I_{injected}$ for I_2 mode
- $I_{op} = (1 - K) \times I_{injected}$ for I_0 mode if $|I\_1| > 0.8$ pu

The directional unit uses the negative-sequence current (I_2) and negative-sequence voltage (V_2).

The following tables define the negative-sequence directional overcurrent element.

Table 5-39: Negative-sequence directional overcurrent unit

Mode	Operating current
Negative-sequence	$I_{op} = \|I\_2\| - K \times \|I\_1\|$
Zero-sequence	$I_{op} = 3 \times (\|I\_0\| - K \times \|I\_1\|)$ if $\|I\_1\| > 0.8$ pu $I_{op} = 3 \times \|I\_0\|$ if $\|I\_1\| \le 0.8$ pu

Table 5-40: Negative-sequence directional unit

Direction	Compared phasors	
Forward	–V_2 + Z_offset × I_2	I_2 × 1∠ECA
Reverse	–V_2 + Z_offset × I_2	–(I_2 × 1∠ECA)

Z_offset is the offset impedance, for which magnitude is the OFFSET setting and angle is the FWD ECA.

The negative-sequence voltage must be greater than **PRODUCT SETUP ⇨⇩ DISPLAY PROPERTIES ⇨⇩ VOLTAGE CUT-OFF LEVEL** to be validated for use as polarizing signal. Additionally, when offset impedance is applied and negative-sequence current is above 0.2 pu, compensated negative-sequence voltage -V_2 + Z_offset x I_2 has to be above 0.02 pu in order to discriminate fault direction; otherwise when negative-sequence current is less than 0.2 pu, -V_2 is then used as the polarizing signal. If the polarizing signal is not validated, neither forward nor reverse indication is given. The following figure explains the usage of the voltage polarized directional unit of the element. It shows the phase angle comparator characteristics for a phase A to ground fault, with settings of

ECA = 75° (element characteristic angle = centerline of operating characteristic)
FWD LA = 80° (forward limit angle = ± the angular limit with the ECA for operation)
REV LA = 80° (reverse limit angle = ± the angular limit with the ECA for operation)

The element incorporates a current reversal logic: if the reverse direction is indicated for at least 1.25 of a power system cycle, the prospective forward indication is delayed by 1.5 of a power system cycle. The element emulates an electromechanical directional device. Larger operating and polarizing signals result in faster directional discrimination, bringing more security to the element operation.

Figure 5-111: Negative-sequence directional characteristic

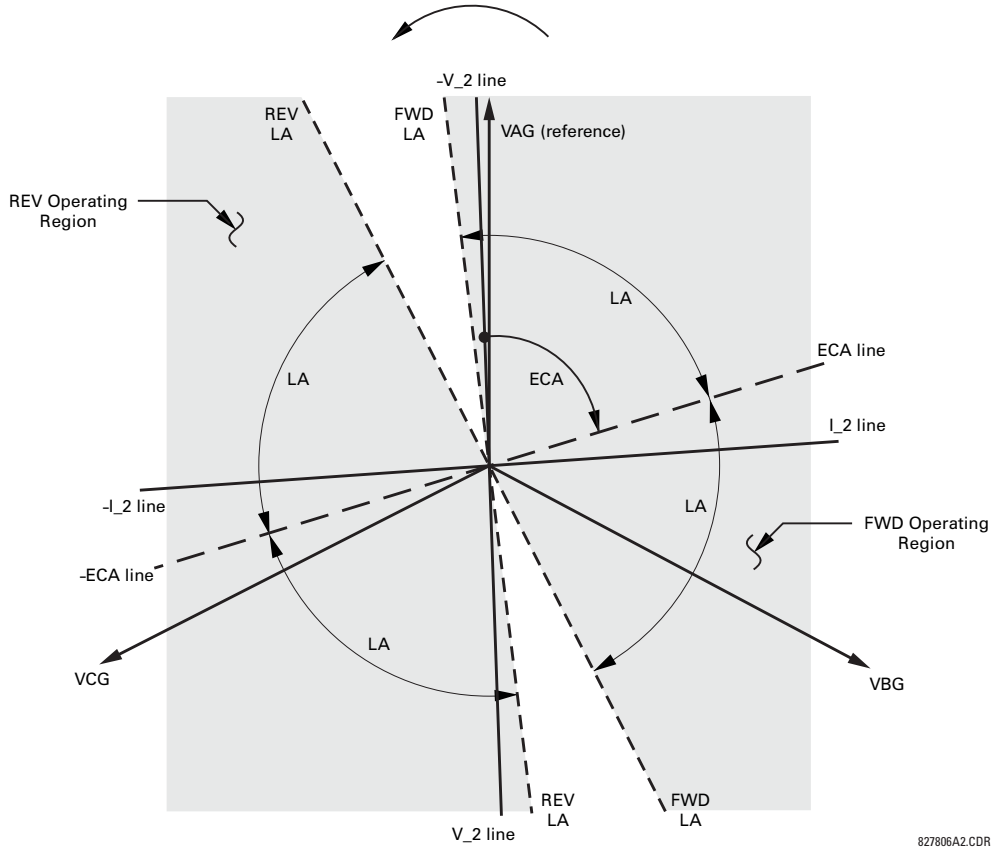

The forward-looking function is designed to be more secure compared to the reverse-looking function, so use the forward-looking function for the tripping direction. The reverse-looking function is faster compared to the forward-looking function, so use the reverse-looking function for the blocking direction. This allows for better protection coordination. Take this bias into account when using the negative-sequence directional overcurrent element to directionalize other protection elements. The negative-sequence current must be greater than the **PRODUCT SETUP ⇨⇩ DISPLAY PROPERTIES ⇨⇩ CURRENT CUT-OFF LEVEL** setting value.

Settings

NEG SEQ DIR OC1 OFFSET — Specifies the offset impedance used by this protection. The primary application for the offset impedance is to guarantee correct identification of fault direction on series compensated lines (see the Application of Settings chapter for information on how to calculate this setting). In regular applications, the offset impedance ensures proper operation even if the negative-sequence voltage at the relaying point is very small. If this is the intent, the offset impedance shall not be larger than the negative-sequence impedance of the protected circuit. Practically, it is several times smaller. Enter the offset impedance in secondary ohms.

NEG SEQ DIR OC1 TYPE — Selects the operating mode for the overcurrent unit of the element. The choices are "Neg Sequence" and "Zero Sequence." In some applications it is advantageous to use a directional negative-sequence overcurrent function instead of a directional zero-sequence overcurrent function as inter-circuit mutual effects are minimized.

NEG SEQ DIR OC1 POS-SEQ RESTRAINT — Controls the positive-sequence restraint. Set it to 0.063 (in "Zero Sequence" mode) or 0.125 (in "Neg Sequence" mode) for backward compatibility with revisions 3.40 and earlier. Set it to zero to remove the restraint. Set it higher if large system unbalances or poor CT performance are expected.

NEG SEQ DIR OC1 FWD ECA — Select the element characteristic angle (ECA) for the forward direction. The element characteristic angle in the reverse direction is the angle set for the forward direction shifted by 180°.

NEG SEQ DIR OC1 FWD LIMIT ANGLE — Defines a symmetrical limit angle (in both directions from the ECA) for the forward direction.

NEG SEQ DIR OC1 FWD PICKUP — Defines the pickup level for the overcurrent unit in the forward direction. This pickup threshold applies to zero-sequence or negative-sequence current based on the **NEG SEQ DIR OC1 TYPE** setting. When specifying this setting, keep in mind that the design uses a positive-sequence restraint technique.

NEG SEQ DIR OC1 REV LIMIT ANGLE — Defines a symmetrical limit angle (in both directions from the ECA) for the reverse direction.

NEG SEQ DIR OC1 REV PICKUP — Defines the pickup level for the overcurrent unit in the reverse direction. This pickup threshold applies to zero-sequence or negative-sequence current based on the **NEG SEQ DIR OC1 TYPE** setting. When selecting this setting, keep in mind that the design uses a positive-sequence restraint technique.

Figure 5-112: Negative-sequence directional OC1 logic

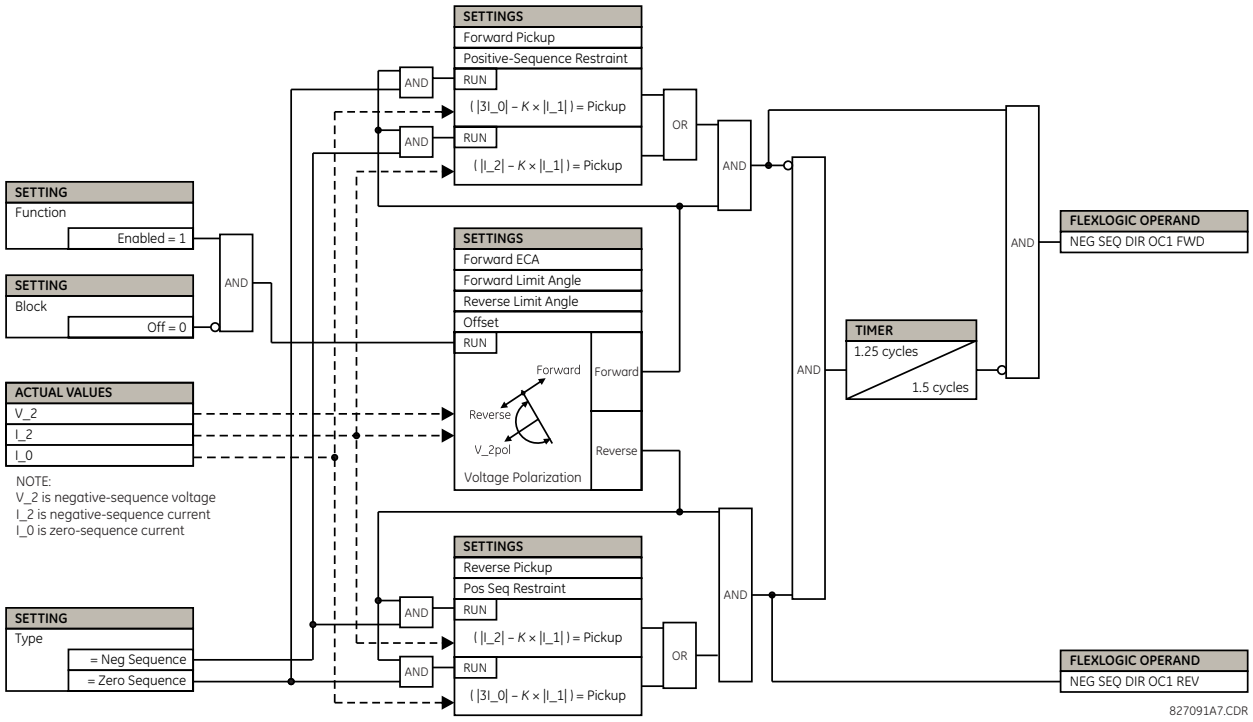

5.7.9 Breaker failure (ANSI 50BF)

SETTINGS ⇨⇩ GROUPED ELEMENTS ⇨ SETTING GROUP 1(6) ⇨ BREAKER FAILURE ⇨ BREAKER FAILURE 1(2)

■ BREAKER FAILURE 1 ■	⇔	BF1 FUNCTION: Disabled	Range: Disabled, Enabled
	⇕	BF1 MODE: 3-Pole	Range: 3-Pole, 1-Pole
	⇕	BF1 SOURCE: SRC 1	Range: SRC 1, SRC 2, SRC 3, SRC 4
	⇕	BF1 USE AMP SUPV: Yes	Range: Yes, No
	⇕	BF1 USE SEAL-IN: Yes	Range: Yes, No
	⇕	BF1 3-POLE INITIATE: Off	Range: FlexLogic operand
	⇕	BF1 BLOCK: Off	Range: FlexLogic operand
	⇕	BF1 PH AMP SUPV PICKUP: 1.050 pu	Range: 0.001 to 30.000 pu in steps of 0.001
	⇕	BF1 N AMP SUPV PICKUP: 1.050 pu	Range: 0.001 to 30.000 pu in steps of 0.001
	⇕	BF1 USE TIMER 1: Yes	Range: Yes, No
	⇕	BF1 TIMER 1 PICKUP DELAY: 0.000 s	Range: 0.000 to 65.535 s in steps of 0.001
	⇕	BF1 USE TIMER 2: Yes	Range: Yes, No
	⇕	BF1 TIMER 2 PICKUP DELAY: 0.000 s	Range: 0.000 to 65.535 s in steps of 0.001
	⇕	BF1 USE TIMER 3: Yes	Range: Yes, No
	⇕	BF1 TIMER 3 PICKUP DELAY: 0.000 s	Range: 0.000 to 65.535 s in steps of 0.001
	⇕	BF1 BKR POS1 ϕA/3P: Off	Range: FlexLogic operand
	⇕	BF1 BKR POS2 ϕA/3P: Off	Range: FlexLogic operand
	⇕	BF1 BREAKER TEST ON: Off	Range: FlexLogic operand
	⇕	BF1 PH AMP HISET PICKUP: 1.050 pu	Range: 0.001 to 30.000 pu in steps of 0.001
	⇕	BF1 N AMP HISET PICKUP: 1.050 pu	Range: 0.001 to 30.000 pu in steps of 0.001
	⇕	BF1 PH AMP LOSET PICKUP: 1.050 pu	Range: 0.001 to 30.000 pu in steps of 0.001
	⇕	BF1 N AMP LOSET PICKUP: 1.050 pu	Range: 0.001 to 30.000 pu in steps of 0.001
	⇕	BF1 LOSET TIME DELAY: 0.000 s	Range: 0.000 to 65.535 s in steps of 0.001

BF1 TRIP DROPOUT DELAY: 0.000 s	Range: 0.000 to 65.535 s in steps of 0.001
BF1 TARGET: Self-reset	Range: Self-reset, Latched, Disabled
BF1 EVENTS: Disabled	Range: Disabled, Enabled
BF1 PH A INITIATE: Off	Range: FlexLogic operand Valid only for 1-Pole breaker failure schemes
BF1 PH B INITIATE: Off	Range: FlexLogic operand Valid only for 1-Pole breaker failure schemes
BF1 PH C INITIATE: Off	Range: FlexLogic operand Valid only for 1-Pole breaker failure schemes
BF1 BKR POS1 ϕB: Off	Range: FlexLogic operand Valid only for 1-Pole breaker failure schemes
BF1 BKR POS1 ϕC: Off	Range: FlexLogic operand Valid only for 1-Pole breaker failure schemes
BF1 BKR POS2 ϕB: Off	Range: FlexLogic operand Valid only for 1-Pole breaker failure schemes
BF1 BKR POS2 ϕC: Off	Range: FlexLogic operand Valid only for 1-Pole breaker failure schemes

5

In general, a breaker failure scheme determines that a breaker signaled to trip has not cleared a fault within a definite time, so further tripping action must be performed. Tripping from the breaker failure scheme should trip all breakers, both local and remote, that can supply current to the faulted zone. Usually operation of a breaker failure element causes clearing of a larger section of the power system than the initial trip. Because breaker failure can result in tripping a large number of breakers and this affects system safety and stability, a very high level of security is required.

Two schemes are provided: one for three-pole tripping only (identified by the name "3BF") and one for three pole plus single-pole operation (identified by the name "1BF"). The philosophy used in these schemes is identical. The operation of a breaker failure element includes three stages: initiation, determination of a breaker failure condition, and output.

Initiation stage

A FlexLogic operand representing the protection trip signal initially sent to the breaker must be selected to initiate the scheme. The initiating signal is sealed-in if primary fault detection can reset before the breaker failure timers have finished timing. The seal-in is supervised by current level, so it is reset when the fault is cleared. If desired, an incomplete sequence seal-in reset can be implemented by using the initiating operand to also initiate a FlexLogic timer, set longer than any breaker failure timer, whose output operand is selected to block the breaker failure scheme.

Schemes can be initiated either directly or with current level supervision. It is particularly important in any application to decide if a current-supervised initiate is to be used. The use of a current-supervised initiate results in the breaker failure element not being initiated for a breaker that has very little or no current flowing through it, which can be the case for transformer faults. For those situations where it is required to maintain breaker fail coverage for fault levels below the **BF1 PH AMP SUPV PICKUP** or the **BF1 N AMP SUPV PICKUP** setting, do not use a current supervised initiate. Utilize this feature for those situations where coordinating margins can be reduced when high speed reclosing is used. Thus, if this choice is made, fault levels must always be above the supervision pickup levels for dependable operation of the breaker fail scheme. This can also occur in breaker-and-a-half or ring bus configurations where the first breaker closes into a fault; the protection trips and attempts to initiate breaker failure for the second breaker, which is in the process of closing, but does not yet have current flowing through it.

When the scheme is initiated, it immediately sends a trip signal to the breaker initially signaled to trip (this feature is usually described as re-trip). This reduces the possibility of widespread tripping that results from a declaration of a failed breaker.

Determination of a breaker failure condition

The schemes determine a breaker failure condition via three paths. Each of these paths is equipped with a time delay, after which a failed breaker is declared and trip signals are sent to all breakers required to clear the zone. The delayed paths are associated with breaker failure timers 1, 2, and 3, which are intended to have delays increasing with increasing timer numbers. These delayed paths are individually enabled to allow for maximum flexibility.

Timer 1 logic (early path) is supervised by a fast-operating breaker auxiliary contact. If the breaker is still closed (as indicated by the auxiliary contact) and fault current is detected after the delay interval, an output is issued. Operation of the breaker auxiliary switch indicates that the breaker has mechanically operated. The continued presence of current indicates that the breaker has failed to interrupt the circuit.

Timer 2 logic (main path) is not supervised by a breaker auxiliary contact. If fault current is detected after the delay interval, an output is issued. This path is intended to detect a breaker that opens mechanically but fails to interrupt fault current; the logic therefore does not use a breaker auxiliary contact.

The timer 1 and 2 paths provide two levels of current supervision, high-set and low-set, that allow the supervision level to change from a current that flows before a breaker inserts an opening resistor into the faulted circuit to a lower level after resistor insertion. The high-set detector is enabled after timeout of timer 1 or 2, along with a timer that enables the low-set detector after its delay interval. The delay interval between high-set and low-set is the expected breaker opening time. Both current detectors provide a fast operating time for currents at small multiples of the pickup value. The overcurrent detectors are required to operate after the breaker failure delay interval in case current still flows through the breaker, and they are supervised by a fast reset element described as follows.

Timer 3 logic (slow path) is supervised by a breaker auxiliary contact and a control switch contact used to indicate that the breaker is in or out-of-service, disabling this path when the breaker is out-of-service for maintenance. There is no current level check in this logic as it is intended to detect low magnitude faults and it is therefore the slowest to operate.

Output

The outputs from the schemes are:

- FlexLogic operands that report on the operation of portions of the scheme
- FlexLogic operand used to re-trip the protected breaker
- FlexLogic operands that initiate tripping required to clear the faulted zone. The trip output can be sealed-in for an adjustable period.
- Target message indicating a failed breaker has been declared
- Illumination of the faceplate Trip LED (and the Phase A, B, or C LED, if applicable)

Main path sequence

Figure 5-113: Breaker failure main path sequence

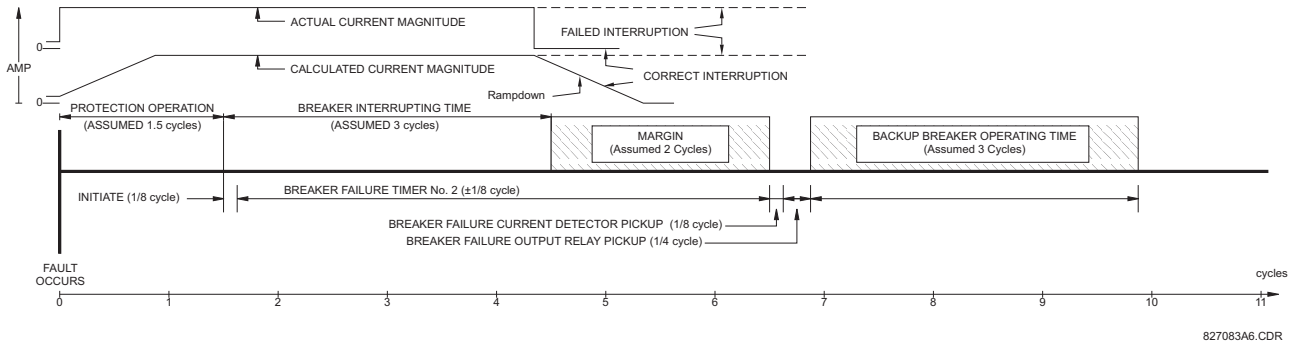

The current supervision elements reset in less than 0.7 of a power cycle for any multiple of pickup current as shown in the following figure.

Figure 5-114: Breaker failure overcurrent supervision reset time

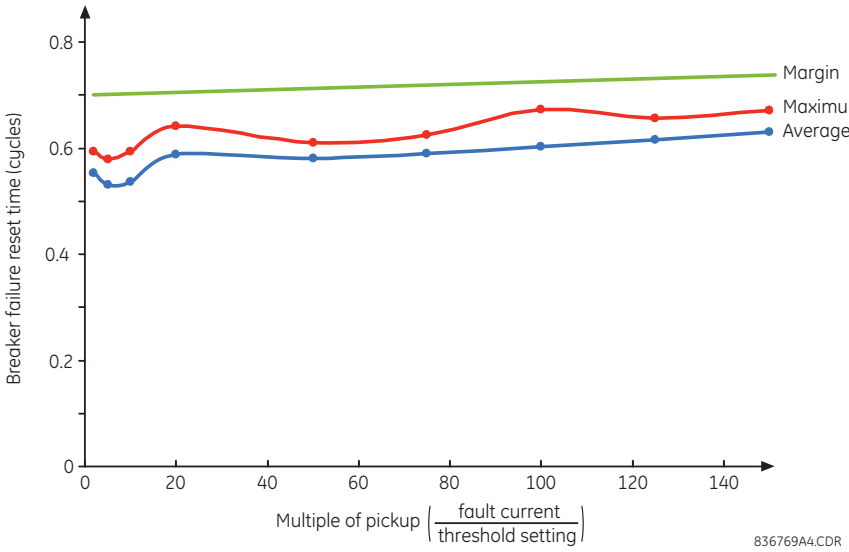

Settings

BF1 MODE — This setting is used to select the breaker failure operating mode: single or three pole.

BF1 USE AMP SUPV — If set to "Yes," the element is initiated if current flowing through the breaker is above the supervision pickup level.

BF1 USE SEAL-IN — If set to "Yes," the element is sealed-in if current flowing through the breaker is above the supervision pickup level.

BF1 3-POLE INITIATE — This setting selects the FlexLogic operand that initiates three-pole tripping of the breaker.

BF1 PH AMP SUPV PICKUP — This setting is used to set the phase current initiation and seal-in supervision level. Generally this setting detects the lowest expected fault current on the protected breaker. It can be set as low as necessary (lower than breaker resistor current or lower than load current)—high-set and low-set current supervision guarantee correct operation.

BF1 N AMP SUPV PICKUP — This setting is used to set the neutral current initiate and seal-in supervision level. Generally this setting detects the lowest expected fault current on the protected breaker. Neutral current supervision is used only in the three phase scheme to provide increased sensitivity. This setting is valid only for three-pole tripping schemes.

BF1 USE TIMER 1 — If set to "Yes," the early path is operational.

BF1 TIMER 1 PICKUP DELAY — Timer 1 is set to the shortest time required for breaker auxiliary contact Status-1 to open, from the time the initial trip signal is applied to the breaker trip circuit, plus a safety margin.

BF1 USE TIMER 2 — If set to "Yes," the main path is operational.

BF1 TIMER 2 PICKUP DELAY — Timer 2 is set to the expected opening time of the breaker, plus a safety margin. This safety margin was historically intended to allow for measuring and timing errors in the breaker failure scheme equipment. In microprocessor relays this time is not significant. In F60 relays, which use a Fourier transform, the calculated current magnitude ramps-down to zero one power frequency cycle after the current is interrupted, however this lag does not need to be included in the overall margin duration due to a novel current supervision reset element, as it occurs after current interruption. As shown in the previous figure, this current supervision reset element guarantees breaker failure reset in less than 0.7 power cycles for any subsidence current and irrespective of the magnitude of the fault current.

Note that in bulk oil circuit breakers, the interrupting time for currents less than 25% of the interrupting rating can be significantly longer than the normal interrupting time.

BF1 USE TIMER 3 — If set to "Yes," the Slow Path is operational.

BF1 TIMER 3 PICKUP DELAY — Timer 3 is set to the same interval as timer 2, plus an increased safety margin. Because this path is intended to operate only for low level faults, the delay can be in the order of 300 to 500 ms.

BF1 BKR POS1 ϕA/3P — This setting selects the FlexLogic operand that represents the protected breaker early-type auxiliary switch contact (52/a). When using the single-pole breaker failure scheme, this operand represents the protected breaker early-type auxiliary switch contact on pole A. This is normally a non-multiplied form-A contact. The contact can even be adjusted to have the shortest possible operating time.

BF1 BKR POS2 ϕA/3P — This setting selects the FlexLogic operand that represents the breaker normal-type auxiliary switch contact (52/a). When using the single-pole breaker failure scheme, this operand represents the protected breaker auxiliary switch contact on pole A. This can be a multiplied contact.

BF1 BREAKER TEST ON — This setting is used to select the FlexLogic operand that represents the breaker in-service/out-of-service switch set to the out-of-service position.

BF1 PH AMP HISET PICKUP — This setting sets the phase current output supervision level. Generally this setting is to detect the lowest expected fault current on the protected breaker, before a breaker opening resistor is inserted.

BF1 N AMP HISET PICKUP — This setting sets the neutral current output supervision level. Generally this setting is to detect the lowest expected fault current on the protected breaker, before a breaker opening resistor is inserted. Neutral current supervision is used only in the three pole scheme to provide increased sensitivity. This setting is valid only for three-pole breaker failure schemes.

BF1 PH AMP LOSET PICKUP — This setting sets the phase current output supervision level. Generally this setting is to detect the lowest expected fault current on the protected breaker, after a breaker opening resistor is inserted (approximately 90% of the resistor current).

BF1 N AMP LOSET PICKUP — This setting sets the neutral current output supervision level. Generally this setting is to detect the lowest expected fault current on the protected breaker, after a breaker opening resistor is inserted (approximately 90% of the resistor current). This setting is valid only for three-pole breaker failure schemes.

BF1 LOSET TIME DELAY — Sets the pickup delay for current detection after opening resistor insertion.

BF1 TRIP DROPOUT DELAY — This setting is used to set the period of time for which the trip output is sealed-in. This timer must be coordinated with the automatic reclosing scheme of the failed breaker, to which the breaker failure element sends a cancel reclosure signal. Reclosure of a remote breaker can also be prevented by holding a transfer trip signal on longer than the reclaim time.

BF1 PH A INITIATE / BF1 PH B INITIATE / BF 1 PH C INITIATE — These settings select the FlexLogic operand to initiate phase A, B, or C single-pole tripping of the breaker and the phase A, B, or C portion of the scheme, accordingly. This setting is only valid for single-pole breaker failure schemes.

BF1 BKR POS1 ϕB / BF1 BKR POS 1 ϕC — These settings select the FlexLogic operand to represents the protected breaker early-type auxiliary switch contact on poles B or C, accordingly. This contact is normally a non-multiplied Form-A contact. The contact can even be adjusted to have the shortest possible operating time. This setting is valid only for single-pole breaker failure schemes.

BF1 BKR POS2 ϕB — Selects the FlexLogic operand that represents the protected breaker normal-type auxiliary switch contact on pole B (52/a). This can be a multiplied contact. This setting is valid only for single-pole breaker failure schemes.

BF1 BKR POS2 ϕC — This setting selects the FlexLogic operand that represents the protected breaker normal-type auxiliary switch contact on pole C (52/a). This can be a multiplied contact. For single-pole operation, the scheme has the same overall general concept except that it provides re-tripping of each single pole of the protected breaker. The approach shown in the following single pole tripping diagram uses the initiating information to determine which pole is supposed to trip. The logic is segregated on a per-pole basis. The overcurrent detectors have ganged settings. This setting is valid only for single-pole breaker failure schemes.

Upon operation of the breaker failure element for a single pole trip command, a three-pole trip command needs to be given via output operand BKR FAIL 1 TRIP OP.

Figure 5-115: Single-pole breaker failure initiate logic

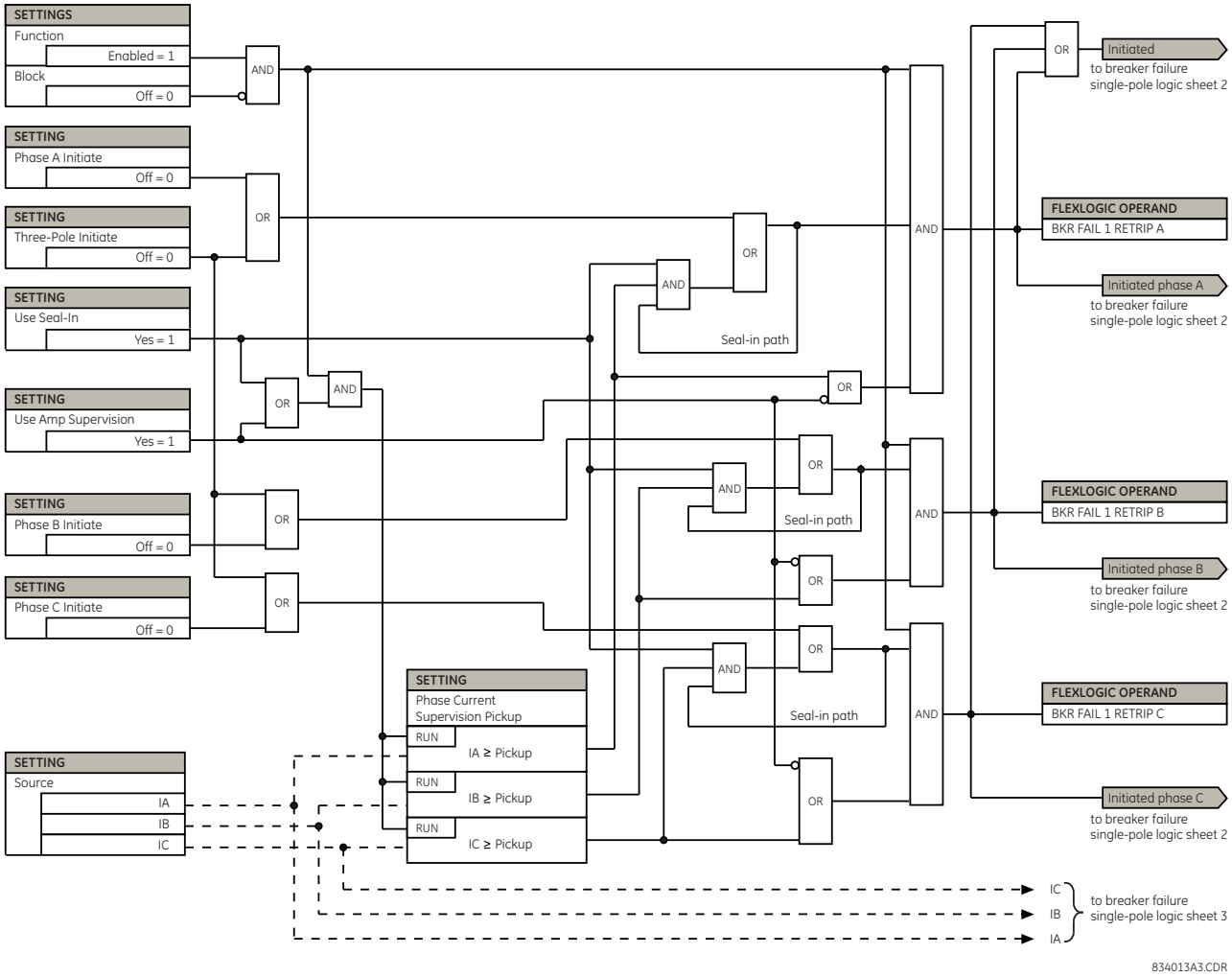

Figure 5-116: Single-pole breaker failure, timers logic

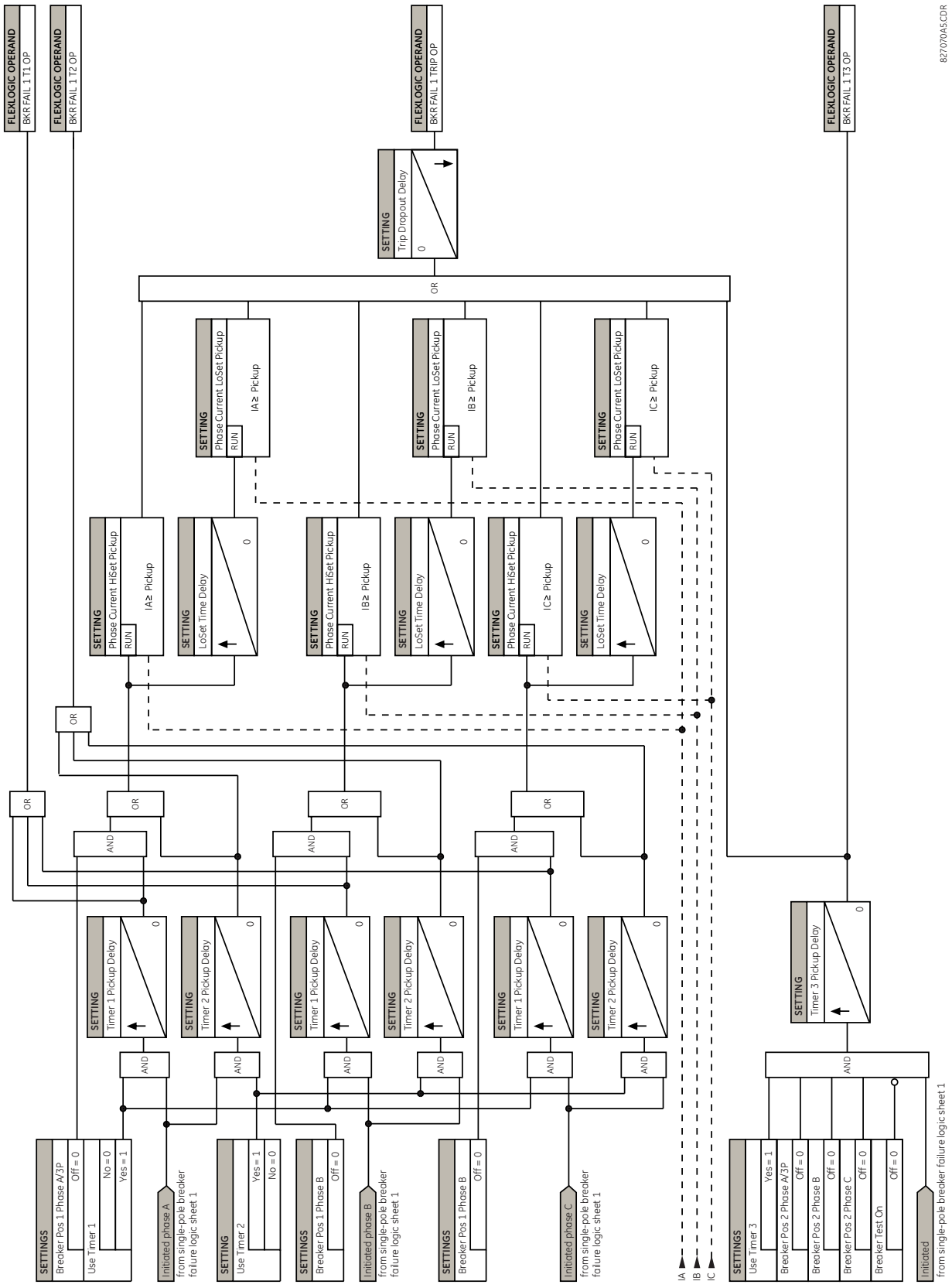

Figure 5-117: Three-pole breaker failure, initiate logic

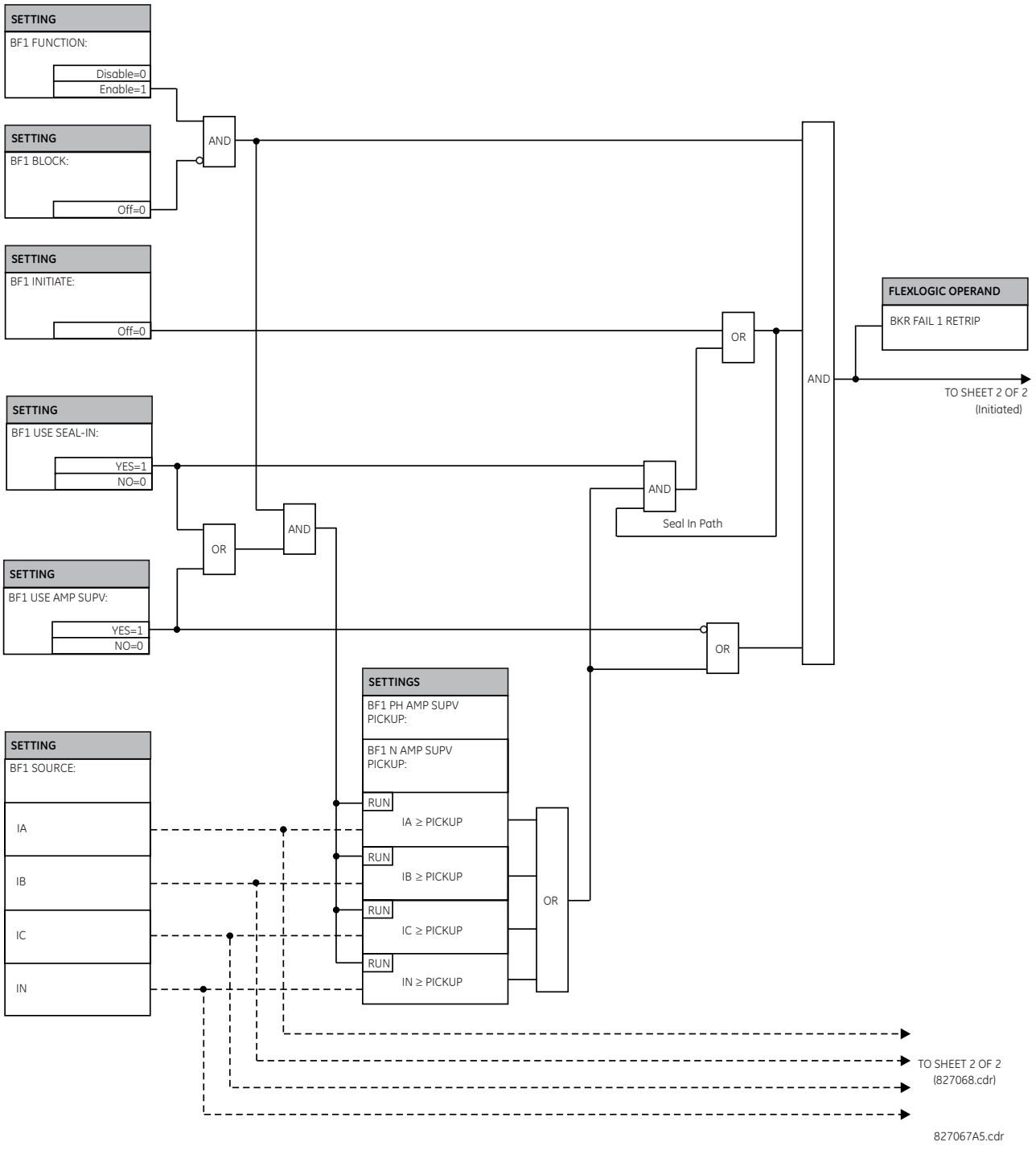

Figure 5-118: Three-pole breaker failure, timers logic

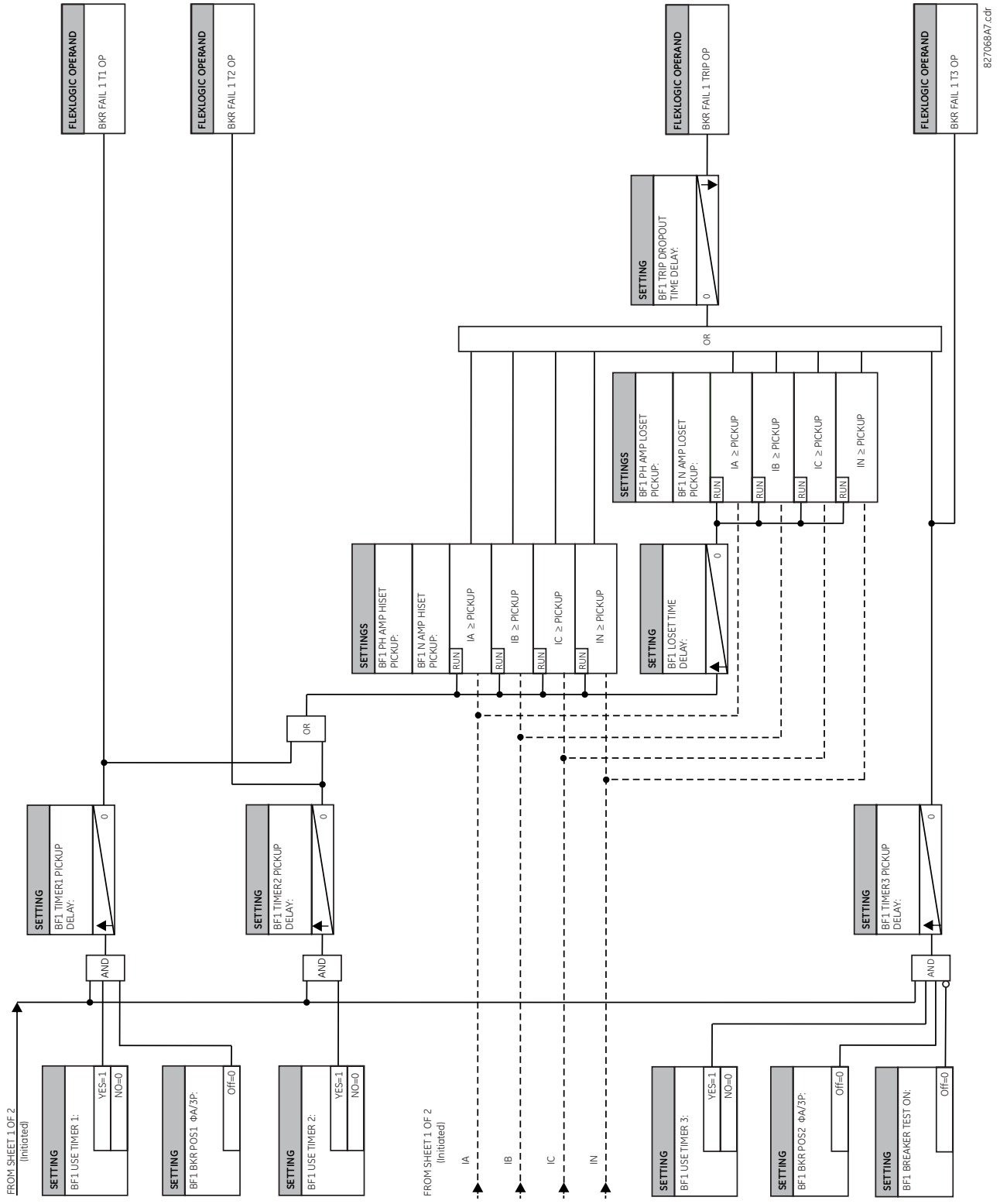

5.7.10 Voltage elements

5.7.10.1 Menu

SETTINGS ⇨⇩ GROUPED ELEMENTS ⇨ SETTING GROUP 1(6) ⇨⇩ VOLTAGE ELEMENTS

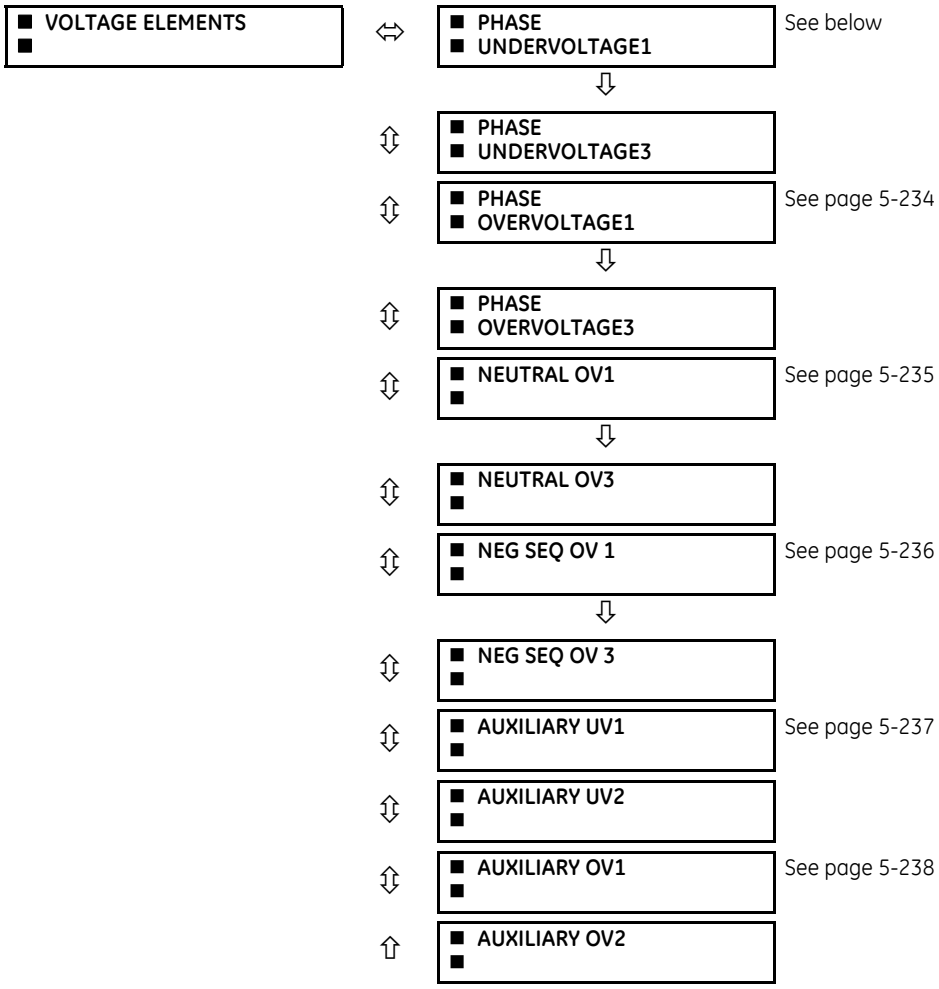

These protection elements can be used for a variety of applications, such as

- **Undervoltage protection** — For voltage sensitive loads, such as induction motors, a drop in voltage increases the drawn current, which can cause dangerous overheating in the motor. The undervoltage protection feature can be used to either cause a trip or generate an alarm when the voltage drops below a specified voltage setting for a specified time delay.
- **Permissive functions** — The undervoltage feature can be used to block the functioning of external devices by operating an output relay when the voltage falls below the specified voltage setting. The undervoltage feature can also be used to block the functioning of other elements through the block feature of those elements.
- **Source transfer schemes** — In the event of an undervoltage, a transfer signal can be generated to transfer a load from its normal source to a standby or emergency power source.

The undervoltage elements can be programmed to have a definite time delay characteristic. The definite time curve operates when the voltage drops below the pickup level for a specified period of time. The time delay is adjustable from 0 to 600.00 seconds in steps of 0.01. The undervoltage elements can also be programmed to have an inverse time delay characteristic.

The undervoltage delay setting defines the family of curves shown as follows.

$$T = \frac{D}{\left(1 - \frac{V}{V_{pickup}}\right)} \qquad \text{Eq. 5-30}$$

where

T = operating time
D = undervoltage delay setting (D = 0.00 operates instantaneously)
V = secondary voltage applied to the relay
V_{pickup} = pickup level

Figure 5-119: Inverse time undervoltage curves

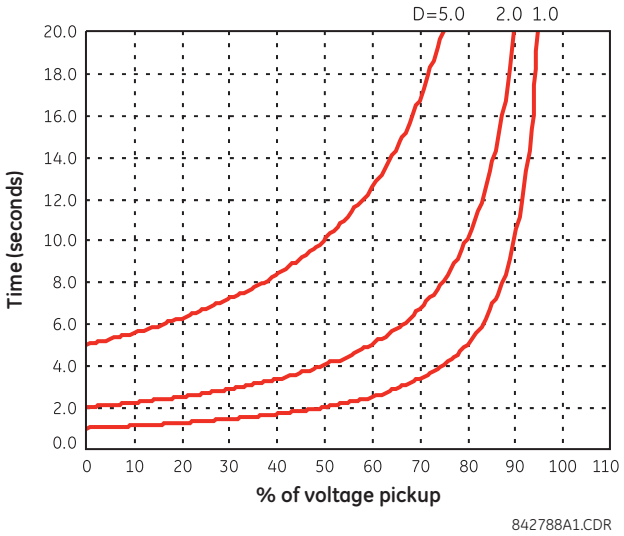

At 0% of pickup, the operating time equals the **PHASE UNDERVOLTAGE DELAY** setting.

5.7.10.2 Phase undervoltage (ANSI 27P, IEC PTUV)

SETTINGS ⇨⇩ GROUPED ELEMENTS ⇨ SETTING GROUP 1(6) ⇨⇩ VOLTAGE ELEMENTS ⇨ PHASE UNDERVOLTAGE1(3)

■ PHASE ■ UNDERVOLTAGE1	⇔	**PHASE UV1 FUNCTION: Disabled**	Range: Disabled, Enabled
	⇕	**PHASE UV1 SIGNAL SOURCE: SRC 1**	Range: SRC 1, SRC 2, SRC 3, SRC 4
	⇕	**PHASE UV1 MODE: Phase to Ground**	Range: Phase to Ground, Phase to Phase
	⇕	**PHASE UV1 PICKUP: 1.000 pu**	Range: 0.000 to 3.000 pu in steps of 0.001
	⇕	**PHASE UV1 CURVE: Definite Time**	Range: Definite Time, Inverse Time
	⇕	**PHASE UV1 DELAY: 1.00 s**	Range: 0.00 to 600.00 s in steps of 0.01
	⇕	**PHASE UV1 MINIMUM VOLTAGE: 0.100 pu**	Range: 0.000 to 3.000 pu in steps of 0.001
	⇕	**PHASE UV1 BLOCK: Off**	Range: FlexLogic operand

⇳	**PHASE UV1 TARGET: Self-reset**	Range: Self-reset, Latched, Disabled
⇧	**PHASE UV1 EVENTS: Disabled**	Range: Disabled, Enabled

This element is used to give a time-delay operating characteristic versus the applied fundamental voltage (phase-to-ground or phase-to-phase for wye VT connection, or phase-to-phase for delta VT connection) or as a definite time element. The element resets instantaneously if the applied voltage exceeds the dropout voltage. The delay setting selects the minimum operating time of the phase undervoltage. The minimum voltage setting selects the operating voltage below which the element is blocked (a setting of "0" allows a dead source to be considered a fault condition).

Figure 5-120: Phase undervoltage1 logic

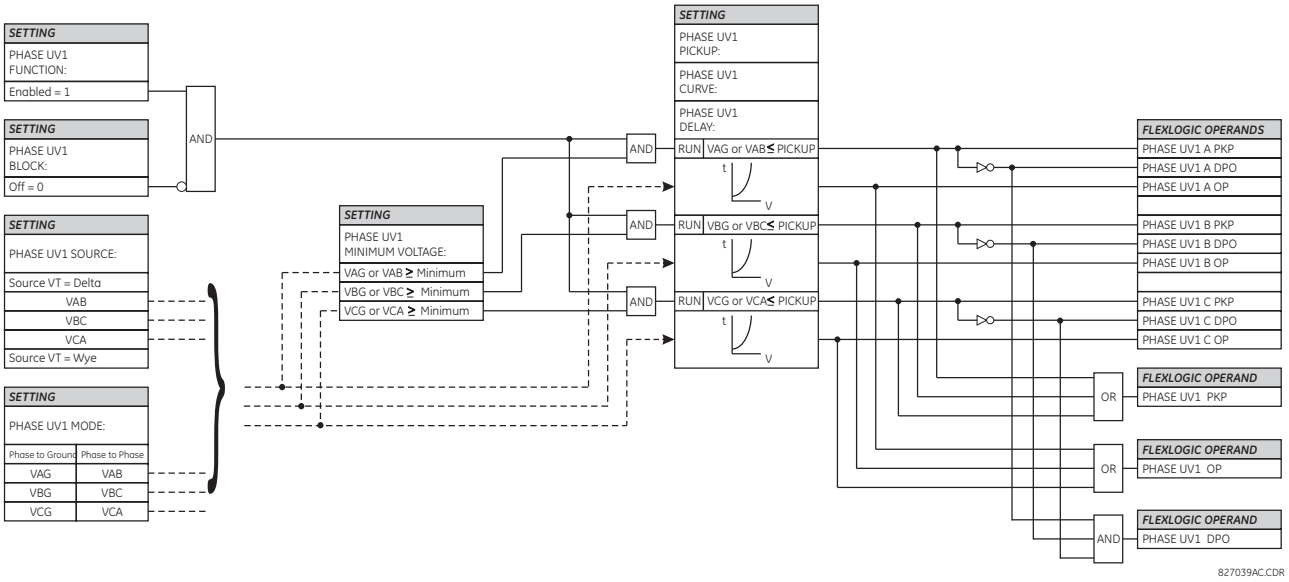

5.7.10.3 Phase overvoltage (ANSI 59P, IEC PTOV)

SETTINGS ⇨⇩ GROUPED ELEMENTS ⇨ SETTING GROUP 1(6) ⇨⇩ VOLTAGE ELEMENTS ⇨⇩ PHASE OVERVOLTAGE1(3)

■ **PHASE**
■ **OVERVOLTAGE1**

⇔	**PHASE OV1 FUNCTION: Disabled**	Range: Disabled, Enabled
⇳	**PHASE OV1 SIGNAL SOURCE: SRC 1**	Range: SRC 1, SRC 2, SRC 3, SRC 4
⇳	**PHASE OV1 PICKUP: 1.000 pu**	Range: 0.000 to 3.000 pu in steps of 0.001
⇳	**PHASE OV1 PICKUP DELAY: 1.00 s**	Range: 0.00 to 600.00 s in steps of 0.01
⇳	**PHASE OV1 RESET DELAY: 1.00 s**	Range: 0.00 to 600.00 s in steps of 0.01
⇳	**PHASE OV1 BLOCK: Off**	Range: FlexLogic Operand
⇳	**PHASE OV1 TARGET: Self-reset**	Range: Self-reset, Latched, Disabled
⇧	**PHASE OV1 EVENTS: Disabled**	Range: Disabled, Enabled

There are three phase overvoltage elements available. A phase overvoltage element is used as an instantaneous element with no intentional time delay or as a definite time element. The input voltage is the phase-to-phase voltage, either measured directly from delta-connected VTs or as calculated from phase-to-ground (wye) connected VTs. The figure shows specific voltages to be used for each phase.

Figure 5-121: Phase overvoltage logic

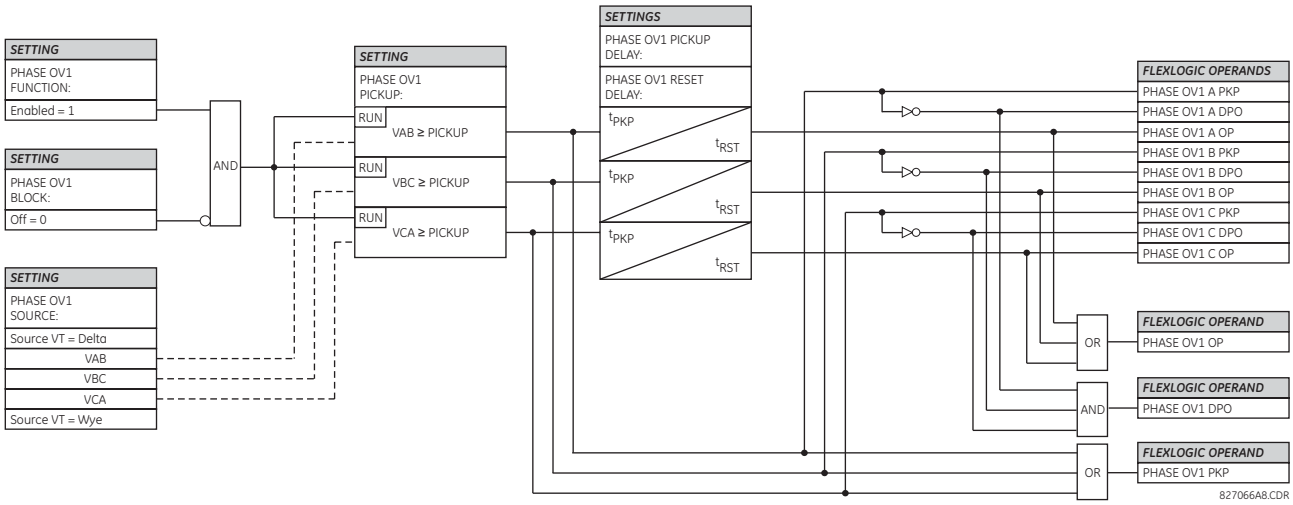

NOTE

If the source VT is wye-connected, then the phase overvoltage pickup condition is $V > \sqrt{3} \times \text{Pickup}$ for V_{AB}, V_{BC}, and V_{CA}.

5.7.10.4 Neutral overvoltage (ANSI 59N, IEC PTOV)

SETTINGS ⇨⇩ GROUPED ELEMENTS ⇨ SETTING GROUP 1(6) ⇨⇩ VOLTAGE ELEMENTS ⇨⇩ NEUTRAL OV1(3)

■ **NEUTRAL OV1** ■	⇔	**NEUTRAL OV1 FUNCTION: Disabled**	Range: Disabled, Enabled
	⇕	**NEUTRAL OV1 SIGNAL SOURCE: SRC 1**	Range: SRC 1, SRC 2, SRC 3, SRC 4
	⇕	**NEUTRAL OV1 PICKUP: 0.300 pu**	Range: 0.000 to 3.000 pu in steps of 0.001
	⇕	**NEUTRAL OV1 CURVE: Definite time**	Range: Definite time, FlexCurve A, FlexCurve B, FlexCurve C
	⇕	**NEUTRAL OV1 PICKUP: DELAY: 1.00 s**	Range: 0.00 to 600.00 s in steps of 0.01
	⇕	**NEUTRAL OV1 RESET: DELAY: 1.00 s**	Range: 0.00 to 600.00 s in steps of 0.01
	⇕	**NEUTRAL OV1 BLOCK: Off**	Range: FlexLogic operand
	⇕	**NEUTRAL OV1 TARGET: Self-reset**	Range: Self-reset, Latched, Disabled
	⇧	**NEUTRAL OV1 EVENTS: Disabled**	Range: Disabled, Enabled

There are three neutral overvoltage elements available. The neutral overvoltage element can be used to detect asymmetrical system voltage condition due to a ground fault or to the loss of one or two phases of the source. The element responds to the system neutral voltage (3V_0), calculated from the phase voltages. The nominal secondary voltage of the phase voltage channels entered under **SETTINGS ⇨⇩ SYSTEM SETUP ⇨ AC INPUTS ⇨⇩ VOLTAGE BANK ⇨ PHASE VT SECONDARY** is the p.u. base used when setting the pickup level.

The neutral overvoltage element can provide a time-delayed operating characteristic versus the applied voltage (initialized from FlexCurves A, B, or C) or be used as a definite time element. The **NEUTRAL OV1 PICKUP DELAY** setting applies only if the **NEUTRAL OV1 CURVE** setting is "Definite time." The source assigned to this element must be configured for a phase VT.

VT errors and normal voltage unbalance must be considered when setting this element. This function requires the VTs to be wye-connected.

Figure 5-122: Neutral overvoltage1 logic

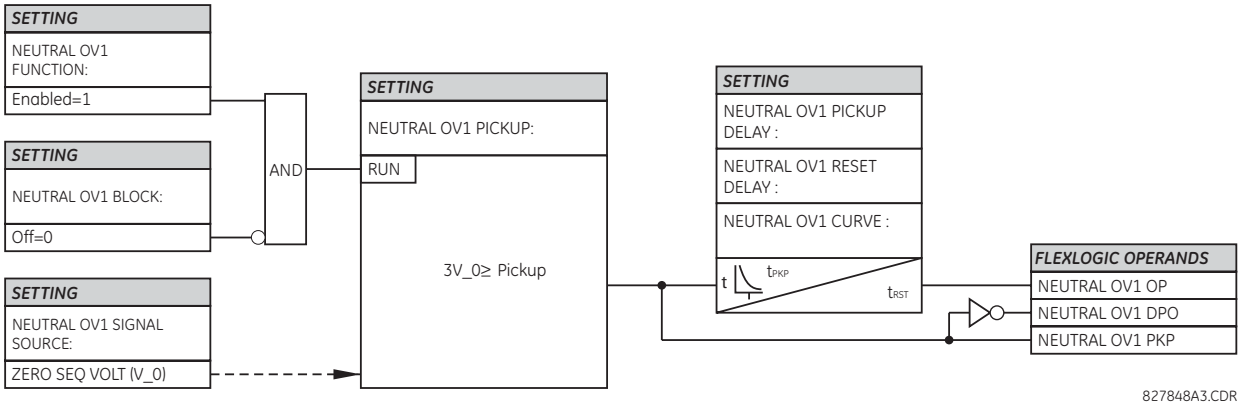

5.7.10.5 Negative sequence overvoltage (ANSI 59Q, IEC PTOV)

SETTINGS ⇨⇩ GROUPED ELEMENTS ⇨ SETTING GROUP 1(6) ⇨⇩ VOLTAGE ELEMENTS ⇨⇩ NEG SEQ OV 1(3)

■ NEG SEQ OV 1 ■	⇔	**NEG SEQ OV 1 FUNCTION: Disabled**	Range: Disabled, Enabled
	⇩	**NEG SEQ OV 1 SIGNAL SOURCE: SRC 1**	Range: SRC 1, SRC 2, SRC 3, SRC 4
	⇩	**NEG SEQ OV 1 PICKUP: 0.300 pu**	Range: 0.000 to 1.250 pu in steps of 0.001
	⇩	**NEG SEQ OV 1 PICKUP DELAY: 0.50 s**	Range: 0.00 to 600.00 s in steps of 0.01
	⇩	**NEG SEQ OV 1 RESET DELAY: 0.50 s**	Range: 0.00 to 600.00 s in steps of 0.01
	⇩	**NEG SEQ OV 1 BLOCK: Off**	Range: FlexLogic operand
	⇩	**NEG SEQ OV 1 TARGET: Self-reset**	Range: Self-reset, Latched, Disabled
	⇩	**NEG SEQ OV 1 EVENTS: Disabled**	Range: Disabled, Enabled

There are three negative-sequence overvoltage elements available.

Use the negative-sequence overvoltage element to detect loss of one or two phases of the source, a reversed phase sequence of voltage, or a non-symmetrical system voltage condition.

Figure 5-123: Negative-sequence overvoltage logic

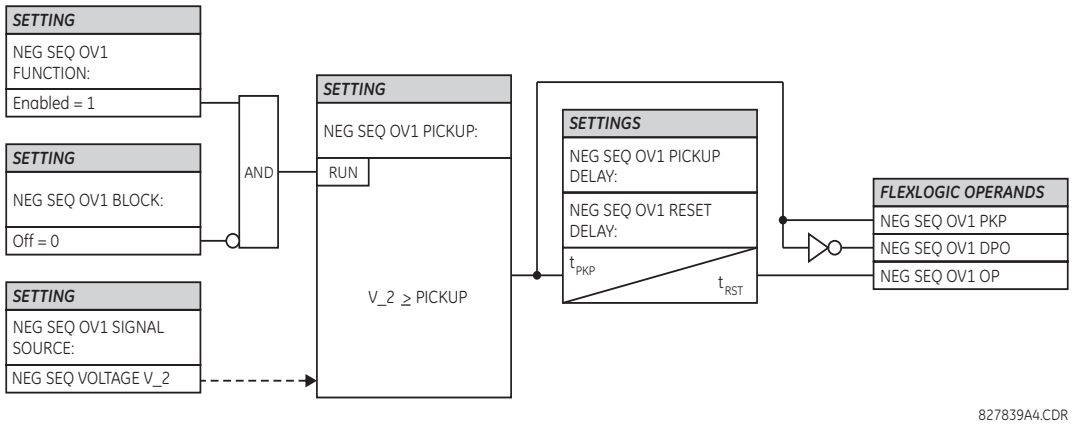

5.7.10.6 Auxiliary undervoltage (ANSI 27X, IEC PTUV)

SETTINGS ⇨⇩ GROUPED ELEMENTS ⇨ SETTING GROUP 1(6) ⇨⇩ VOLTAGE ELEMENTS ⇨⇩ AUXILIARY UV1(2)

■ AUXILIARY UV1 ■	⇔	**AUX UV1 FUNCTION: Disabled**	Range: Disabled, Enabled
	⇳	**AUX UV1 SIGNAL SOURCE: SRC 1**	Range: SRC 1, SRC 2, SRC 3, SRC 4
	⇳	**AUX UV1 PICKUP: 0.700 pu**	Range: 0.000 to 3.000 pu in steps of 0.001
	⇳	**AUX UV1 CURVE: Definite Time**	Range: Definite Time, Inverse Time
	⇳	**AUX UV1 DELAY: 1.00 s**	Range: 0.00 to 600.00 s in steps of 0.01
	⇳	**AUX UV1 MINIMUM: VOLTAGE: 0.100 pu**	Range: 0.000 to 3.000 pu in steps of 0.001
	⇳	**AUX UV1 BLOCK: Off**	Range: FlexLogic operand
	⇳	**AUX UV1 TARGET: Self-reset**	Range: Self-reset, Latched, Disabled
	⇧	**AUX UV1 EVENTS: Disabled**	Range: Disabled, Enabled

The F60 contains one auxiliary undervoltage element for each VT bank. This element monitors undervoltage conditions of the auxiliary voltage.

The **AUX UV1 PICKUP** selects the voltage level at which the time undervoltage element starts timing. The nominal secondary voltage of the auxiliary voltage channel entered under **SETTINGS ⇨⇩ SYSTEM SETUP ⇨ AC INPUTS ⇨⇩ VOLTAGE BANK X5 ⇨⇩ AUXILIARY VT X5 SECONDARY** is the per-unit base used when setting the pickup level.

The **AUX UV1 DELAY** setting selects the minimum operating time of the auxiliary undervoltage element.

Both **AUX UV1 PICKUP** and **AUX UV1 DELAY** settings establish the operating curve of the undervoltage element. The auxiliary undervoltage element can be programmed to use either definite time delay or inverse time delay characteristics. The operating characteristics and equations for both definite and inverse time delay are as for the phase undervoltage element.

The element resets instantaneously. The minimum voltage setting selects the operating voltage below which the element is blocked.

Figure 5-124: Auxiliary undervoltage logic

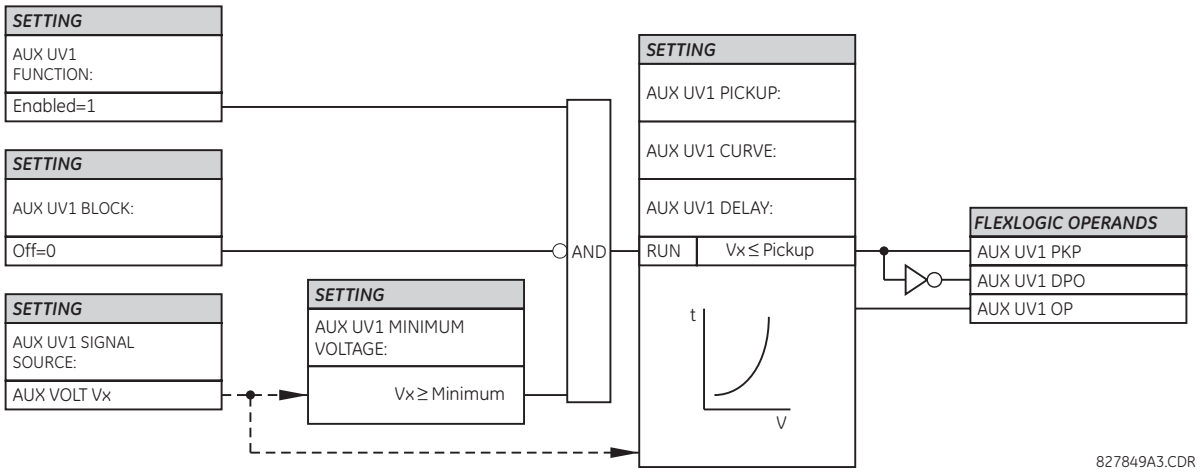

5.7.10.7 Auxiliary overvoltage (ANSI 59X, IEC PTOV)

SETTINGS ⇨⇩ GROUPED ELEMENTS ⇨ SETTING GROUP 1(6) ⇨⇩ VOLTAGE ELEMENTS ⇨⇩ AUXILIARY OV1(2)

■ AUXILIARY OV1 ■	⇔	**AUX OV1 FUNCTION: Disabled**	Range: Disabled, Enabled
	⇩	**AUX OV1 SIGNAL SOURCE: SRC 1**	Range: SRC 1, SRC 2, SRC 3, SRC 4
	⇩	**AUX OV1 PICKUP: 0.300 pu**	Range: 0.000 to 3.000 pu in steps of 0.001
	⇩	**AUX OV1 PICKUP DELAY: 1.00 s**	Range: 0.00 to 600.00 s in steps of 0.01
	⇩	**AUX OV1 RESET DELAY: 1.00 s**	Range: 0.00 to 600.00 s in steps of 0.01
	⇩	**AUX OV1 BLOCK: Off**	Range: FlexLogic operand
	⇩	**AUX OV1 TARGET: Self-reset**	Range: Self-reset, Latched, Disabled
	⇩	**AUX OV1 EVENTS: Disabled**	Range: Disabled, Enabled

The F60 contains one auxiliary overvoltage element for each VT bank. This element is intended for monitoring overvoltage conditions of the auxiliary voltage. The nominal secondary voltage of the auxiliary voltage channel entered under **SYSTEM SETUP ⇨ AC INPUTS ⇩⇨ VOLTAGE BANK X5 ⇩⇨ AUXILIARY VT X5 SECONDARY** is the per-unit (pu) base used when setting the pickup level.

A typical application for this element is monitoring the zero-sequence voltage (3V_0) supplied from an open-corner-delta VT connection.

Figure 5-125: Auxiliary overvoltage logic

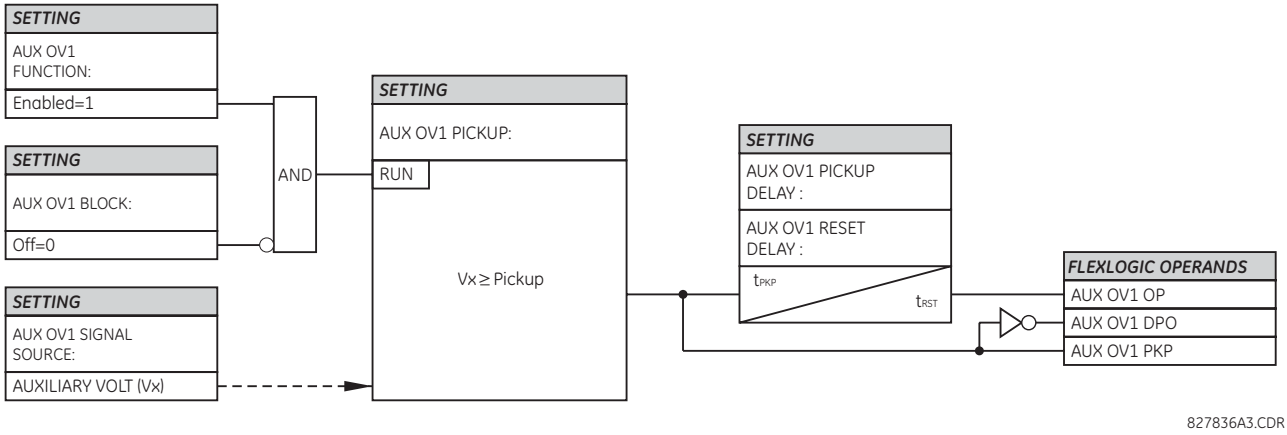

5.7.11 Sensitive directional power (ANSI 32)

SETTINGS ⇨⇩ GROUPED ELEMENTS ⇨ SETTING GROUP 1(6) ⇨⇩ POWER ⇨⇩ SENSITIVE DIRECTIONAL POWER ⇨ DIRECTIONAL POWER 1(2)

■ DIRECTIONAL POWER 1	⇔	**DIR POWER 1 FUNCTION: Disabled**	Range: Disabled, Enabled
	⇕	**DIR POWER 1 SOURCE: SRC 1**	Range: SRC 1, SRC 2, SRC 3, SRC 4
	⇕	**DIR POWER 1 RCA: 0°**	Range: 0 to 359° in steps of 1
	⇕	**DIR POWER 1 CALIBRATION: 0.00°**	Range: 0 to 0.95° in steps of 0.05
	⇕	**DIR POWER 1 STG1 SMIN: 0.100 pu**	Range: –1.200 to 1.200 pu in steps of 0.001
	⇕	**DIR POWER 1 STG1 DELAY: 0.50 s**	Range: 0.00 to 600.00 s in steps of 0.01
	⇕	**DIR POWER 1 STG2 SMIN: 0.100 pu**	Range: –1.200 to 1.200 pu in steps of 0.001
	⇕	**DIR POWER 1 STG2 DELAY: 20.00 s**	Range: 0.00 to 600.00 s in steps of 0.01
	⇕	**DIR POWER 1 BLK: Off**	Range: FlexLogic operand
	⇕	**DIR POWER 1 TARGET: Self-Reset**	Range: Self-Reset, Latched, Disabled
	⇧	**DIR POWER 1 EVENTS: Disabled**	Range: Disabled, Enabled

The sensitive directional power element responds to three-phase directional power and is designed for reverse power and low forward power applications for synchronous machines or interconnections involving co-generation. The relay measures the three-phase power from either a full set of wye-connected VTs or a full set of delta-connected VTs. In the latter case, the two-wattmeter method is used. See the UR-series Metering Conventions section in chapter 6 for details regarding the active and reactive powers used by the sensitive directional power element.

The element has an adjustable characteristic angle and minimum operating power as shown in the Directional Power Characteristic diagram that follows. The element responds to the following condition:

$$P\cos\theta + Q\sin\theta > SMIN \qquad \textbf{Eq. 5-31}$$

where

P and Q are active and reactive powers as measured per the UR metering convention
θ is a sum of the element characteristic (**DIR POWER 1 RCA**) and calibration (**DIR POWER 1 CALIBRATION**) angles
SMIN is the minimum operating power

The operating quantity is displayed in the **ACTUAL VALUES ⇨ METERING ⇨⇩ SENSITIVE DIRECTIONAL POWER 1(2)** actual value. The element has two independent (as to the pickup and delay settings) stages for alarm and trip, respectively.

Figure 5-126: Directional power characteristic

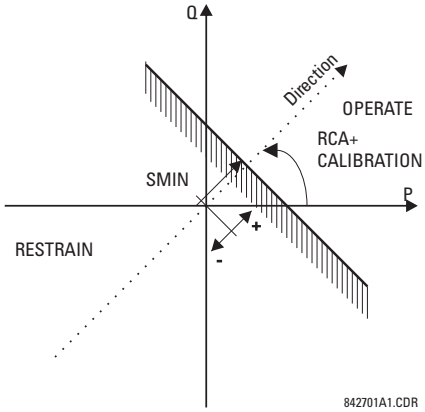

5

By making the characteristic angle adjustable and providing for both negative and positive values of the minimum operating power, a variety of operating characteristics can be achieved as presented in the following figure. For example, section (a) in the figure shows settings for reverse power, while section (b) shows settings for low forward power applications.

Figure 5-127: Directional power element sample applications

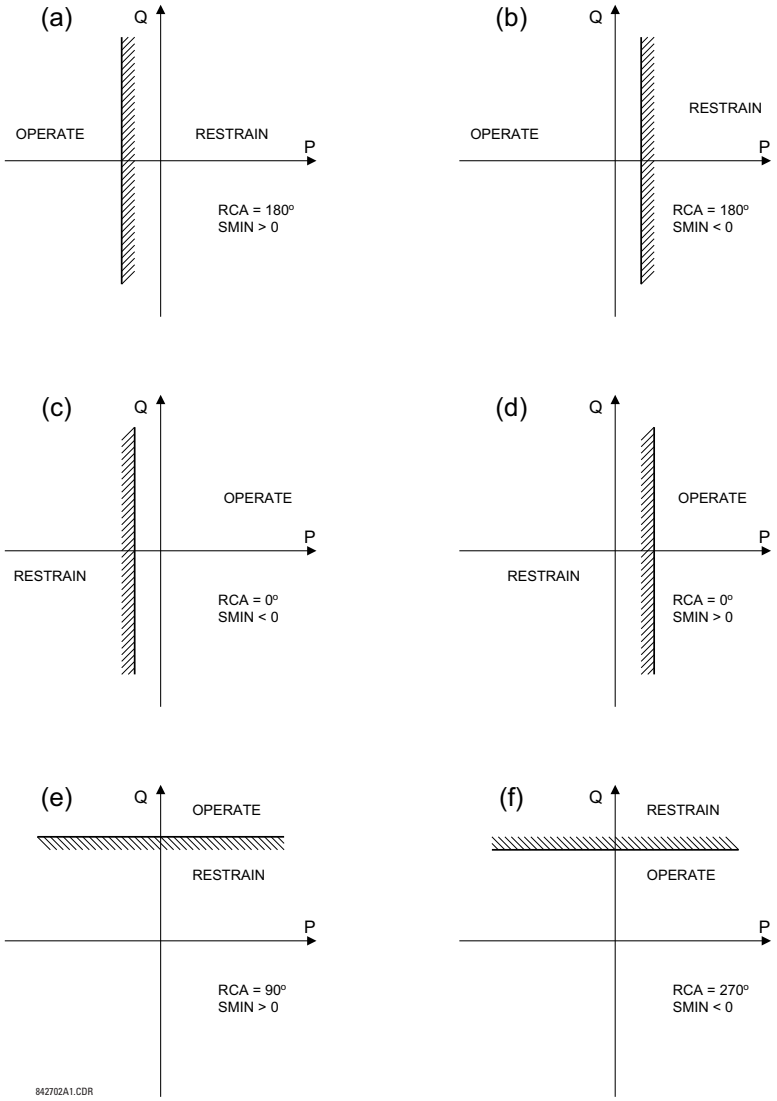

DIR POWER 1 RCA — Specifies the relay characteristic angle (RCA) for the sensitive directional power function. Application of this setting is threefold:

- It allows the element to respond to active or reactive power in any direction (active overpower/underpower, and so on)
- Together with a precise calibration angle, it allows compensation for any CT and VT angular errors to permit more sensitive settings
- It allows for required direction in situations when the voltage signal is taken from behind a delta-wye connected power transformer and the phase angle compensation is required

For example, the active overpower characteristic is achieved by setting **DIR POWER 1 RCA** to "0°," reactive overpower by setting **DIR POWER 1 RCA** to "90°," active underpower by setting **DIR POWER 1 RCA** to "180°," and reactive underpower by setting **DIR POWER 1 RCA** to "270°."

DIR POWER 1 CALIBRATION — This setting allows the relay characteristic angle to change in steps of 0.05°. This is useful when a small difference in VT and CT angular errors is to be compensated to permit more sensitive settings. This setting virtually enables calibration of the directional power function in terms of the angular error of applied VTs and CTs. The element responds to the sum of the **DIR POWER 1 RCA** and **DIR POWER 1 CALIBRATION** settings.

DIR POWER 1 STG1 SMIN — This setting specifies the minimum power as defined along the relay characteristic angle (RCA) for the stage 1 of the element. The positive values imply a shift towards the operate region along the RCA line; the negative values imply a shift towards the restrain region along the RCA line. See the Directional Power Sample Applications figure for details. Together with the RCA, this setting enables a wide range of operating characteristics. This setting applies to three-phase power and is entered in per-unit (pu) values. The base quantity is 3 x VT pu base x CT pu base.

For example, a setting of 2% for a 200 MW machine is 0.02 × 200 MW = 4 MW. If 13.8kV is line voltage and 10 kA is a primary CT current, the source pu quantity is 239 MVA, and thus, SMIN needs to be set at 4 MW / 239 MVA = 0.0167 pu ≈ 0.017 pu. If the reverse power application is considered, RCA = 180° and SMIN = 0.017 pu.

The element drops out if the magnitude of the positive-sequence current becomes virtually zero, that is, it drops below the cutoff level.

DIR POWER 1 STG1 DELAY — This setting specifies a time delay for stage 1. For reverse power or low forward power applications for a synchronous machine, stage 1 is typically applied for alarming and stage 2 for tripping.

Figure 5-128: Sensitive directional power logic

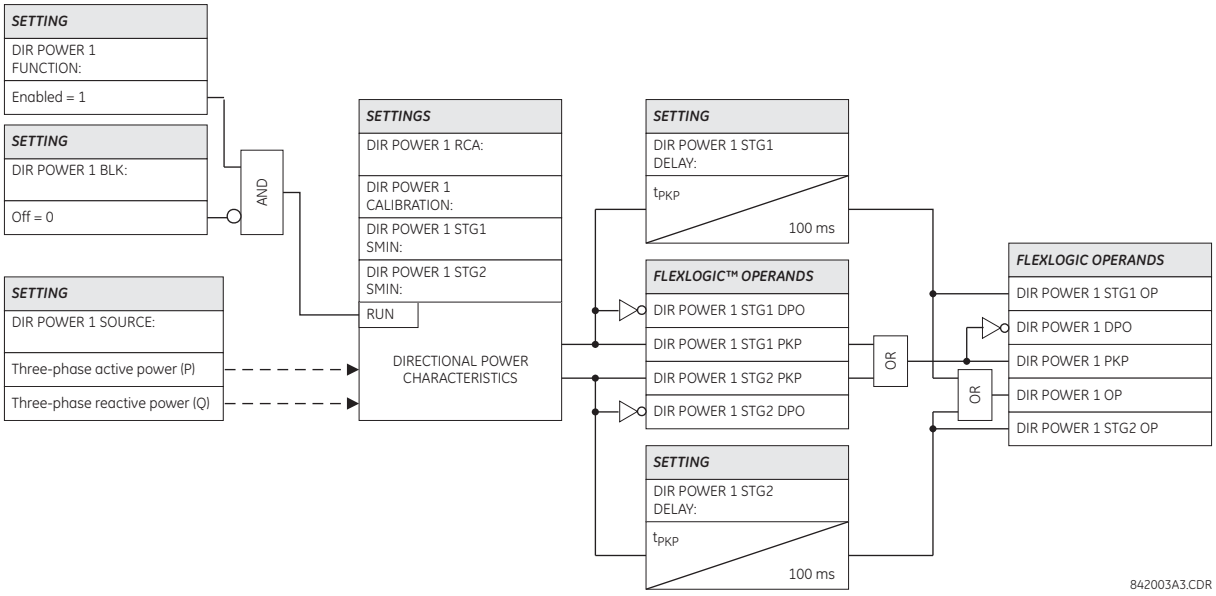

5.8 Control elements

5.8.1 Overview

Control elements are used for control rather than protection. See the Introduction to Elements section at the beginning of this chapter for information.

5.8.2 Trip bus

SETTINGS ⇨⇩ CONTROL ELEMENTS ⇨ TRIP BUS ⇨⇩ TRIP BUS 1(6)

■ TRIP BUS 1 ■	⇔	**TRIP BUS 1 FUNCTION: Disabled**	Range: Enabled, Disabled
	⇳	**TRIP BUS 1 BLOCK: Off**	Range: FlexLogic operand
	⇳	**TRIP BUS 1 PICKUP DELAY: 0.00 s**	Range: 0.00 to 600.00 s in steps of 0.01

⇳	**TRIP BUS 1 RESET DELAY: 0.00 s**	Range: 0.00 to 600.00 s in steps of 0.01
⇳	**TRIP BUS 1 INPUT 1 Off**	Range: FlexLogic operand
⇩		
⇳	**TRIP BUS 1 INPUT 16 Off**	Range: FlexLogic operand
⇳	**TRIP BUS 1 LATCHING: Disabled**	Range: Enabled, Disabled
⇳	**TRIP BUS 1 RESET: Off**	Range: FlexLogic operand
⇳	**TRIP BUS 1 TARGET: Self-reset**	Range: Self-reset, Latched, Disabled
⇧	**TRIP BUS 1 EVENTS: Disabled**	Range: Enabled, Disabled

The trip bus element allows aggregating outputs of protection and control elements without using FlexLogic and assigning them a simple and effective manner. Each trip bus can be assigned for either trip or alarm actions. Simple trip conditioning such as latch, delay, and seal-in delay are available.

The easiest way to assign element outputs to a trip bus is through the EnerVista software under **Settings > Protection Summary**. Navigate to a specific protection or control protection element and check the bus box by hovering over the blank check box and selecting an option that displays. Once the desired element is selected for a specific bus, a list of element operate-type operands are displayed and can be assigned to a trip bus. If more than one operate-type operand is required, it can be assigned directly from the trip bus menu.

Figure 5-129: Trip bus fields in the protection summary

Protection Summary // Quick Connect: Quick Connect Device: Settings

Save | Restore | Default | Reset | VIEW ALL mode

GROUPED ELEMENTS	TB1 TB2 TB3 TB4 TB5	GROUP 1	GROUP 2	GROUP 3	GROUP 4	GROUP 5	GROUP 6
Current Differential	☐ ☐ ☐ ☐ ☐ ☐	Disabled	Disabled	Disabled	Disabled	Disabled	Disabled
Stub Bus	☐ ☐ ☐ ☐ ☐ ☐	Disabled	Disabled	Disabled	Disabled	Disabled	Disabled
Line Pickup	☐ ☐ ☐ ☐ ☐ ☐	Disabled	Disabled	Disabled	Disabled	Disabled	Disabled
Phase Distance Z 1	☐ ☐ ☐ ☐ ☐ ☐	Disabled	Disabled	Disabled	Disabled	Disabled	Disabled
Phase Distance Z 2	☐ ☐ ☐ ☐ ☐ ☐	Disabled	Disabled	Disabled	Disabled	Disabled	Disabled
Phase Distance Z 3	☐ ☐ ☐ ☐ ☐ ☐	Disabled	Disabled	Disabled	Disabled	Disabled	Disabled
Ground Distance Z 1	☐ ☐ ☐ ☐ ☐ ☐	Disabled	Disabled	Disabled	Disabled	Disabled	Disabled
Ground Distance Z 2	☐ ☐ ☐ ☐ ☐ ☐	Disabled	Disabled	Disabled	Disabled	Disabled	Disabled
Ground Distance Z 3	☐ ☐ ☐ ☐ ☐ ☐	Disabled	Disabled	Disabled	Disabled	Disabled	Disabled
Power Swing	☐ ☐ ☐ ☐ ☐ ☐	Disabled	Disabled	Disabled	Disabled	Disabled	Disabled
Load Encroachment	☐ ☐ ☐ ☐ ☐ ☐	Disabled	Disabled	Disabled	Disabled	Disabled	Disabled
Phase TOC 1	☐ ☐ ☐ ☐ ☐ ☐	Disabled	Disabled	Disabled	Disabled	Disabled	Disabled
Phase TOC 2	☐ ☐ ☐ ☐ ☐ ☐	Disabled	Disabled	Disabled	Disabled	Disabled	Disabled
Phase TOC 3	☐ ☐ ☐ ☐ ☐ ☐	Disabled	Disabled	Disabled	Disabled	Disabled	Disabled
Phase TOC 4	☐ ☐ ☐ ☐ ☐ ☐	Disabled	Disabled	Disabled	Disabled	Disabled	Disabled

Quick Connect Device

The following settings are available.

TRIP BUS 1 BLOCK — The trip bus output is blocked when the operand assigned to this setting is asserted.

TRIP BUS 1 PICKUP DELAY — This setting specifies a time delay to produce an output depending on how output is used.

TRIP BUS 1 RESET DELAY — This setting specifies a time delay to reset an output command. Set the time delay long enough to allow the breaker or contactor to perform a required action.

TRIP BUS 1 INPUT 1 to **TRIP BUS 1 INPUT 16** — These settings select a FlexLogic operand to be assigned as an input to the trip bus.

TRIP BUS 1 LATCHING — This setting enables or disables latching of the trip bus output. This is typically used when lockout is required or user acknowledgement of the relay response is required.

TRIP BUS 1 RESET — The trip bus output is reset when the operand assigned to this setting is asserted. Note that the RESET OP operand is pre-wired to the reset gate of the latch, As such, a reset command from the front panel interface or via communications resets the trip bus output.

Figure 5-130: Trip bus logic

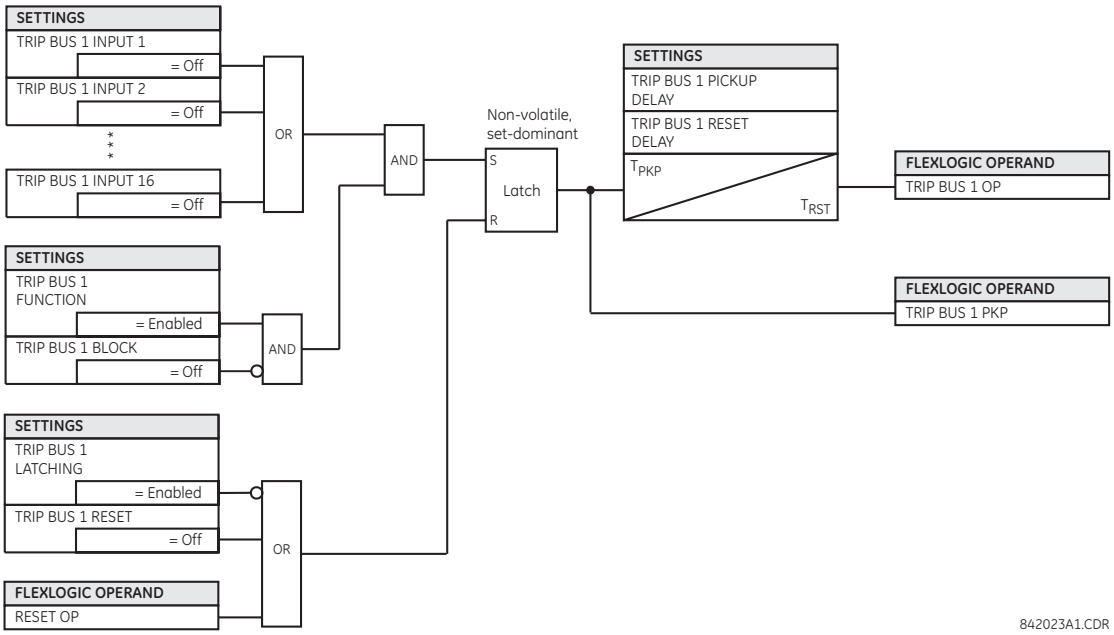

5.8.3 Setting groups

SETTINGS ⇨⇩ CONTROL ELEMENTS ⇨ SETTING GROUPS

■ SETTING GROUPS ■	⇔	**SETTING GROUPS FUNCTION: Enabled** — Range: Disabled, Enabled
	⇳	**SETTING GROUPS BLK: Off** — Range: FlexLogic operand
	⇳	**GROUP 2 ACTIVATE ON: Off** — Range: FlexLogic operand
	⇩	
	⇳	**GROUP 6 ACTIVATE ON: Off** — Range: FlexLogic operand
	⇳	**GROUP 1 NAME:** — Range: up to 16 alphanumeric characters
	⇩	
	⇳	**GROUP 6 NAME:** — Range: up to 16 alphanumeric characters
	⇧	**SETTING GROUP EVENTS: Disabled** — Range: Disabled, Enabled

The setting groups menu controls the activation and deactivation of up to six possible groups of settings in the **GROUPED ELEMENTS** settings menu. The active setting group can be indicated on the front display of the UR by configuring User-Programmable LEDs to display the state of the SETTING GROUP ACT FlexLogic operands.

On a setting group change, protection elements are blocked temporarily to allow the relay to re-initialize with the new settings. The duration of the block depends on relay configuration and can last up to four cycles. The actual block duration on the group switching can be verified by the PROTSUPV operand.

SETTING GROUPS FUNCTION — When Enabled, allows setting groups other than group 1 (the default active group) to be activated. The default setting group is forced active while the **SETTING GROUPS FUNCTION** setting is Disabled.

SETTING GROUPS BLK — Prevents the active setting group from changing when the selected FlexLogic operand is "On." This can be useful in applications where it is undesirable to change the settings under certain conditions, such as during a control sequence.

GROUP 2 ACTIVATE ON to **GROUP 6 ACTIVATE ON** — Selects a FlexLogic operand which, when set, makes the particular setting group active for use by any grouped element. A priority scheme ensures that only one group is active at a given time — the highest-numbered group that is activated by its **ACTIVATE ON** parameter takes priority over the lower-numbered groups. There is no activate on setting for group 1 (the default active group), because group 1 automatically becomes active if no other group is active.

SETTING GROUP 1 NAME to **SETTING GROUP 6 NAME** — Allows the user to assign a name to each of the six settings groups. Once programmed, this name appears on the second line of the **GROUPED ELEMENTS ⇨ SETTING GROUP 1(6)** menu display.

The relay can be set up via a FlexLogic equation to receive requests to activate or de-activate a particular non-default settings group. The following FlexLogic equation (see the following figure) illustrates requests via remote communications (for example, VIRTUAL INPUT 1 ON) or from a local contact input (for example, CONTACT IP 1 ON) to initiate the use of a particular settings group, and requests from several overcurrent pickup measuring elements to inhibit the use of the particular settings group. The assigned VIRTUAL OUTPUT 1 operand is used to control the "On" state of a particular settings group.

Figure 5-131: Example of FlexLogic control of a setting group

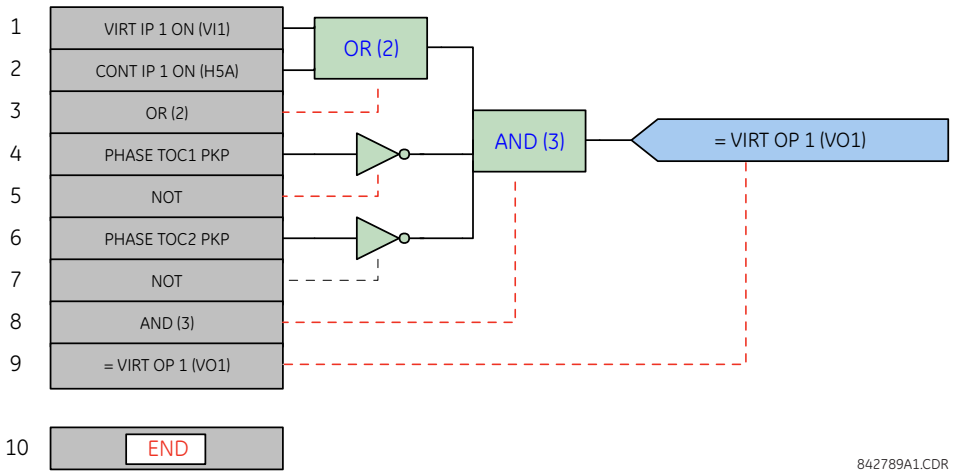

A setting group selection can also be made by the IEC 61850 MMS service SelectActiveSG to the control block @Master/LLN0.SGCB. The priority scheme mentioned makes active the highest numbered group selected by SelectActiveSG or the **GROUP ACTIVATE ON** settings. The SelectActiveSG selection has a default value of 1, so until a higher SelectActiveSG selection is received, the **GROUP ACTIVATE ON** settings control the active group.

The most recent SelectActiveSG selection is preserved while the UR is powered down or reset.

If it becomes necessary to cancel the SelectActiveSG selection without using a SelectActiveSG service request, change the **SETTING GROUPS FUNCTION** setting to Disabled. This resets the SelectActiveSG selection to 1.

5.8.4 Selector switch

SETTINGS ⇨⇩ CONTROL ELEMENTS ⇨ SELECTOR SWITCH ⇨ SELECTOR SWITCH 1(2)

■ **SELECTOR SWITCH 1** ■	⇔	**SELECTOR 1 FUNCTION: Disabled**	Range: Disabled, Enabled

⇳	**SELECTOR 1 FULL RANGE: 7**	Range: 1 to 7 in steps of 1
⇳	**SELECTOR 1 TIME-OUT: 5.0 s**	Range: 3.0 to 60.0 s in steps of 0.1
⇳	**SELECTOR 1 STEP-UP: Off**	Range: FlexLogic operand
⇳	**SELECTOR 1 STEP-UP MODE: Time-out**	Range: Time-out, Acknowledge
⇳	**SELECTOR 1 ACK: Off**	Range: FlexLogic operand
⇳	**SELECTOR 1 3BIT A0: Off**	Range: FlexLogic operand
⇳	**SELECTOR 1 3BIT A1: Off**	Range: FlexLogic operand
⇳	**SELECTOR 1 3BIT A2: Off**	Range: FlexLogic operand
⇳	**SELECTOR 1 3BIT MODE: Time-out**	Range: Time-out, Acknowledge
⇳	**SELECTOR 1 3BIT ACK: Off**	Range: FlexLogic operand
⇳	**SELECTOR 1 POWER-UP MODE: Restore**	Range: Restore, Synchronize, Sync/Restore
⇳	**SELECTOR 1 TARGETS: Self-reset**	Range: Self-reset, Latched, Disabled
⇧	**SELECTOR 1 EVENTS: Disabled**	Range: Disabled, Enabled

The selector switch element is intended to replace a mechanical selector switch. Typical applications include setting group control or control of multiple logic sub-circuits in user-programmable logic.

The element provides for two control inputs. The step-up control allows stepping through selector position one step at a time with each pulse of the control input, such as a user-programmable pushbutton. The three-bit control input allows setting the selector to the position defined by a three-bit word.

The element allows pre-selecting a new position without applying it. The pre-selected position gets applied either after time-out or upon acknowledgement via separate inputs (user setting). The selector position is stored in non-volatile memory. Upon power-up, either the previous position is restored or the relay synchronizes to the current three-bit word (user setting). Basic alarm functionality alerts the user under abnormal conditions; for example, the three-bit control input being out of range.

A selector switch runs every two power cycles.

SELECTOR 1 FULL RANGE — This setting defines the upper position of the selector. When stepping up through available positions of the selector, the upper position wraps up to the lower position (position 1). When using a direct three-bit control word for programming the selector to a desired position, the change would take place only if the control word is within the range of 1 to the **SELECTOR FULL RANGE**. If the control word is outside the range, an alarm is established by setting the SELECTOR ALARM FlexLogic operand for three seconds.

SELECTOR 1 TIME-OUT — This setting defines the time-out period for the selector. This value is used by the relay in the following two ways. When the **SELECTOR STEP-UP MODE** is "Time-out," the setting specifies the required period of inactivity of the control input after which the pre-selected position is automatically applied. When the **SELECTOR STEP-UP MODE** is "Acknowledge," the setting specifies the period of time for the acknowledging input to appear. The timer is re-started by any activity of the control input. The acknowledging input must come before the **SELECTOR 1 TIME-OUT** timer expires; otherwise, the change does not take place and an alarm is set.

SELECTOR 1 STEP-UP — This setting specifies a control input for the selector switch. The switch is shifted to a new position at each rising edge of this signal. The position changes incrementally, wrapping up from the last (**SELECTOR 1 FULL RANGE**) to the first (position 1). Consecutive pulses of this control operand must not occur faster than every 50 ms. After each rising edge of the assigned operand, the time-out timer is restarted and the SELECTOR SWITCH 1: POS Z CHNG INITIATED target message is displayed, where Z the pre-selected position. The message is displayed for the time specified by the **FLASH MESSAGE TIME** setting. The pre-selected position is applied after the selector times out ("Time-out" mode), or when the acknowledging signal appears before the element times out ("Acknowledge" mode). When the new position is applied, the relay displays the SELECTOR SWITCH 1: POSITION Z IN USE message. Typically, a user-programmable pushbutton is configured as the stepping up control input.

SELECTOR 1 STEP-UP MODE — This setting defines the selector mode of operation. When set to "Time-out," the selector changes its position after a pre-defined period of inactivity at the control input. The change is automatic and does not require any explicit confirmation of the intent to change the selector's position. When set to "Acknowledge," the selector changes its position only after the intent is confirmed through a separate acknowledging signal. If the acknowledging signal does not appear within a pre-defined period of time, the selector does not accept the change and an alarm is established by setting the SELECTOR STP ALARM output FlexLogic operand for three seconds.

SELECTOR 1 ACK — This setting specifies an acknowledging input for the stepping up control input. The pre-selected position is applied on the rising edge of the assigned operand. This setting is active only under "Acknowledge" mode of operation. The acknowledging signal must appear within the time defined by the **SELECTOR 1 TIME-OUT** setting after the last activity of the control input. A user-programmable pushbutton is typically configured as the acknowledging input.

SELECTOR 1 3BIT A0, **A1**, and **A2** — These settings specify a three-bit control input of the selector. The three-bit control word pre-selects the position using the following encoding convention:

A2	A1	A0	Position
0	0	0	rest
0	0	1	1
0	1	0	2
0	1	1	3
1	0	0	4
1	0	1	5
1	1	0	6
1	1	1	7

The "rest" position (0, 0, 0) does not generate an action and is intended for situations when the device generating the three-bit control word is having a problem. When **SELECTOR 1 3BIT MODE** is "Time-out," the pre-selected position is applied in **SELECTOR 1 TIME-OUT** seconds after the last activity of the three-bit input. When **SELECTOR 1 3BIT MODE** is "Acknowledge," the pre-selected position is applied on the rising edge of the **SELECTOR 1 3BIT ACK** acknowledging input.

The stepping up control input (**SELECTOR 1 STEP-UP**) and the three-bit control inputs (**SELECTOR 1 3BIT A0** through **A2**) lock-out mutually: once the stepping up sequence is initiated, the three-bit control input is inactive; once the three-bit control sequence is initiated, the stepping up input is inactive.

SELECTOR 1 3BIT MODE — This setting defines the selector mode of operation. When set to "Time-out," the selector changes its position after a pre-defined period of inactivity at the control input. The change is automatic and does not require explicit confirmation to change the selector position. When set to "Acknowledge," the selector changes its position only after confirmation via a separate acknowledging signal. If the acknowledging signal does not appear within a pre-defined period of time, the selector rejects the change and an alarm established by invoking the SELECTOR BIT ALARM FlexLogic operand for three seconds.

SELECTOR 1 3BIT ACK — This setting specifies an acknowledging input for the three-bit control input. The pre-selected position is applied on the rising edge of the assigned FlexLogic operand. This setting is active only under the "Acknowledge" mode of operation. The acknowledging signal must appear within the time defined by the **SELECTOR TIME-OUT** setting after the last activity of the three-bit control inputs. Note that the stepping up control input and three-bit control input have independent acknowledging signals (**SELECTOR 1 ACK** and **SELECTOR 1 3BIT ACK**, accordingly).

SELECTOR 1 POWER-UP MODE — This setting specifies the element behavior on power up of the relay.

When set to "Restore," the last position of the selector (stored in the non-volatile memory) is restored after powering up the relay. If the position restored from memory is out of range, position 0 (no output operand selected) is applied and an alarm is set (**SELECTOR 1 PWR ALARM**).

When set to "Synchronize," the selector switch acts as follows. For two power cycles, the selector applies position 0 to the switch and activates **SELECTOR 1 PWR ALARM**. After two power cycles expire, the selector synchronizes to the position dictated by the three-bit control input. This operation does not wait for time-out or the acknowledging input. When the synchronization attempt is unsuccessful (that is, the three-bit input is not available (0,0,0) or out of range), then the selector switch output is set to position 0 (no output operand selected) and an alarm is established (**SELECTOR 1 PWR ALARM**).

The operation of "Synch/Restore" mode is similar to the "Synchronize" mode. The only difference is that after an unsuccessful synchronization attempt, the switch attempts to restore the position stored in the relay memory. The "Synch/Restore" mode is useful for applications where the selector switch is employed to change the setting group in redundant (two relay) protection schemes.

SELECTOR 1 EVENTS — If enabled, the following events are logged:

Event name	Description
SELECTOR 1 POS Z	Selector 1 changed its position to Z
SELECTOR 1 STP ALARM	The selector position pre-selected via the stepping up control input has not been confirmed before the time out
SELECTOR 1 BIT ALARM	The selector position pre-selected via the three-bit control input has not been confirmed before the time out

The following figures illustrate the operation of the selector switch. In these diagrams, "T" represents a time-out setting.

Figure 5-132: Time-out mode

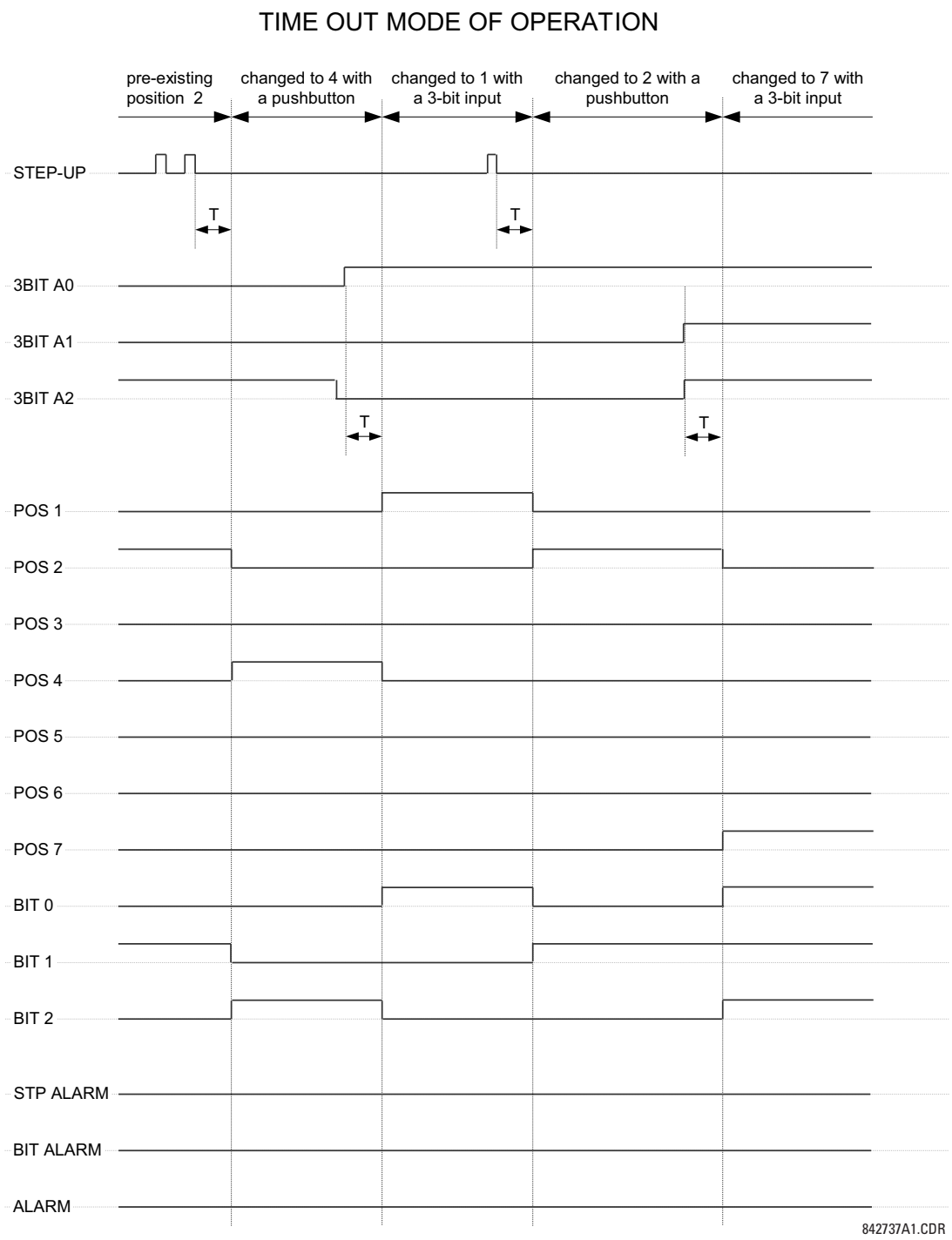

Figure 5-133: Acknowledge mode

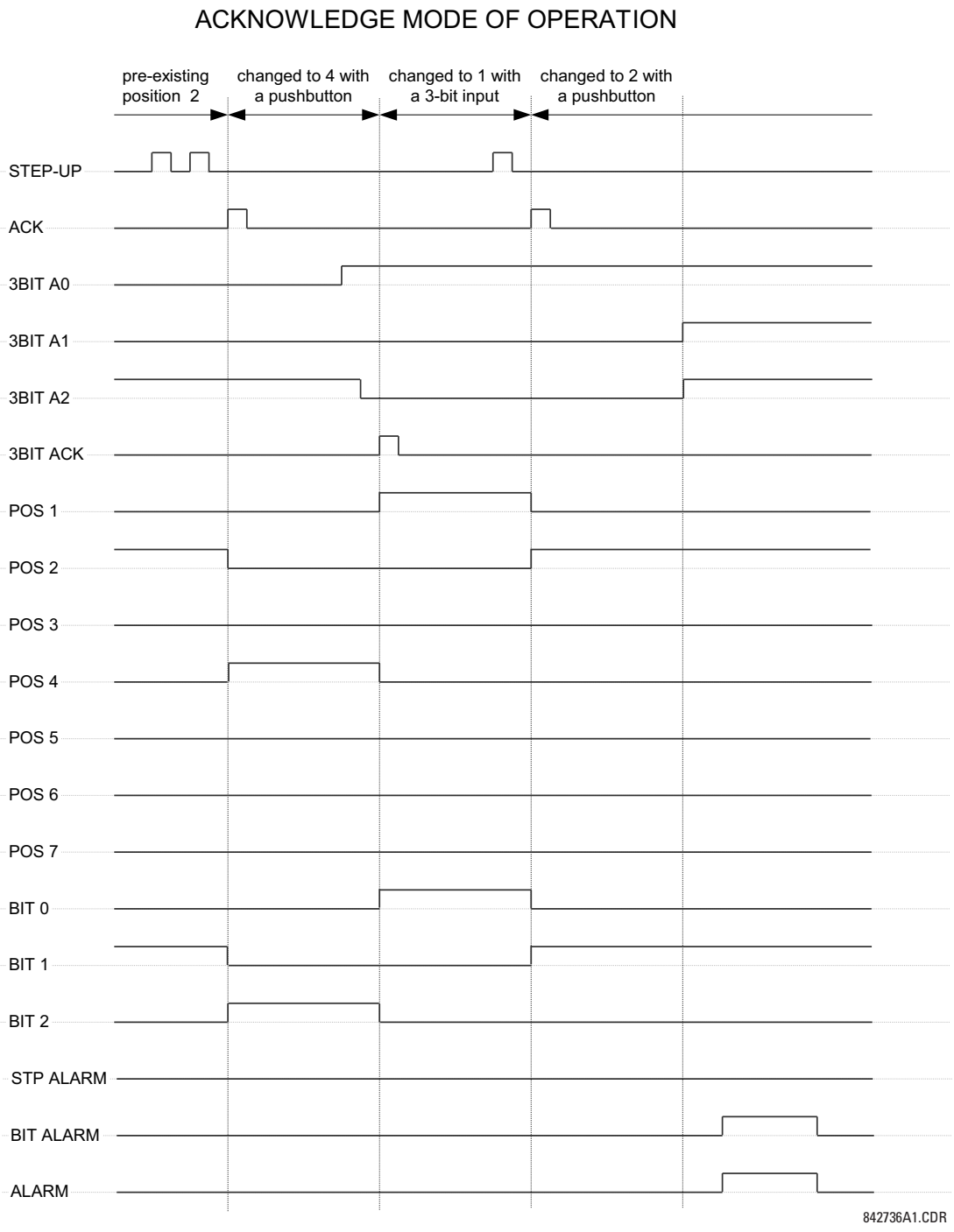

Application example

Consider an application where the selector switch is used to control setting groups 1 through 4 in the relay. The setting groups are to be controlled from both user-programmable pushbutton 1 and from an external device via contact inputs 1 through 3. The active setting group is to be available as an encoded three-bit word to the external device and SCADA via output contacts 1 through 3. The pre-selected setting group is to be applied automatically after five seconds of inactivity of the control inputs. When the relay powers up, it is to synchronize the setting group to the three-bit control input.

Make the following changes to setting group control in the **SETTINGS ⇨⇩ CONTROL ELEMENTS ⇨ SETTING GROUPS** menu:

SETTING GROUPS FUNCTION: "Enabled"
SETTING GROUPS BLK: "Off"
GROUP 2 ACTIVATE ON: "SELECTOR 1 POS 2"
GROUP 3 ACTIVATE ON: "SELECTOR 1 POS 3"
GROUP 4 ACTIVATE ON: "SELECTOR 1 POS 4"
GROUP 5 ACTIVATE ON: "Off"
GROUP 6 ACTIVATE ON: "Off"

Make the following changes to selector switch element in the **SETTINGS ⇨⇩ CONTROL ELEMENTS ⇨⇩ SELECTOR SWITCH ⇨ SELECTOR SWITCH 1** menu to assign control to user programmable pushbutton 1 and contact inputs 1 through 3:

SELECTOR 1 FUNCTION: "Enabled"
SELECTOR 1 FULL-RANGE: "4"
SELECTOR 1 STEP-UP MODE: "Time-out"
SELECTOR 1 TIME-OUT: "5.0 s"
SELECTOR 1 STEP-UP: "PUSHBUTTON 1 ON"
SELECTOR 1 ACK: "Off"
SELECTOR 1 3BIT A0: "CONT IP 1 ON"
SELECTOR 1 3BIT A1: "CONT IP 2 ON"
SELECTOR 1 3BIT A2: "CONT IP 3 ON"
SELECTOR 1 3BIT MODE: "Time-out"
SELECTOR 1 3BIT ACK: "Off"
SELECTOR 1 POWER-UP MODE: "Synchronize"

Now, assign the contact output operation (assume the H6E module) to the selector switch element by making the following changes in the **SETTINGS ⇨⇩ INPUTS/OUTPUTS ⇨⇩ CONTACT OUTPUTS** menu:

OUTPUT H1 OPERATE: "SELECTOR 1 BIT 0"
OUTPUT H2 OPERATE: "SELECTOR 1 BIT 1"
OUTPUT H3 OPERATE: "SELECTOR 1 BIT 2"

Finally, assign configure user-programmable pushbutton 1 by making the following changes in the **SETTINGS ⇨ PRODUCT SETUP ⇨⇩ USER-PROGRAMMABLE PUSHBUTTONS ⇨ USER PUSHBUTTON 1** menu:

PUSHBUTTON 1 FUNCTION: "Self-reset"
PUSHBUTTON 1 DROP-OUT TIME: "0.10 s"

The figure shows the logic for the selector switch.

Figure 5-134: Selector switch logic

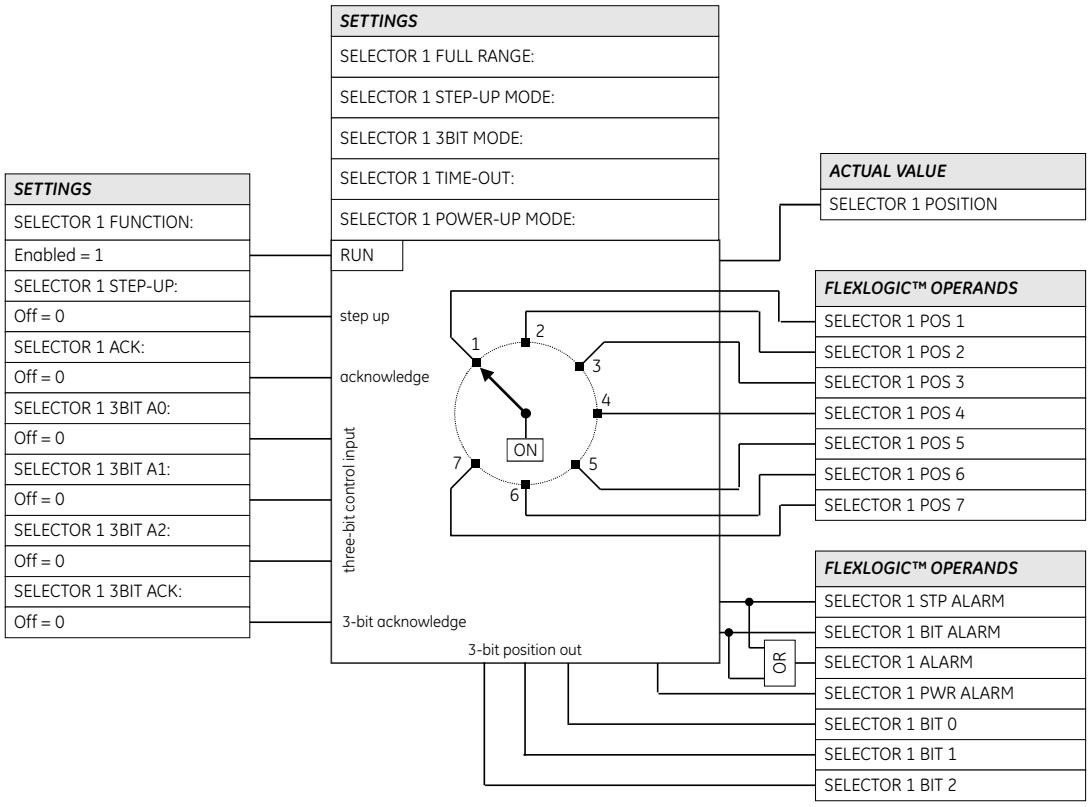

5.8.5 Underfrequency (ANSI 81U)

SETTINGS ⇨⇩ CONTROL ELEMENTS ⇨⇩ UNDERFREQUENCY ⇨⇩ UNDERFREQUENCY 1(6)

■ UNDERFREQUENCY 1 ■	⇔	**UNDFREQ 1 FUNCTION: Disabled**	Range: Disabled, Enabled
	⇳	**UNDERFREQ 1 BLOCK: Off**	Range: FlexLogic operand
	⇳	**UNDERFREQ 1 SOURCE: SRC 1**	Range: SRC 1, SRC 2, SRC 3, SRC 4
	⇳	**UNDERFREQ 1 MIN VOLT/AMP: 0.10 pu**	Range: 0.10 to 1.25 pu in steps of 0.01
	⇳	**UNDERFREQ 1 PICKUP: 59.50 Hz**	Range: 20.00 to 65.00 Hz in steps of 0.01
	⇳	**UNDERFREQ 1 PICKUP DELAY: 2.000 s**	Range: 0.000 to 65.535 s in steps of 0.001
	⇳	**UNDERFREQ 1 RESET DELAY : 2.000 s**	Range: 0.000 to 65.535 s in steps of 0.001
	⇳	**UNDERFREQ 1 TARGET: Self-reset**	Range: Self-reset, Latched, Disabled
	⇳	**UNDERFREQ 1 EVENTS: Disabled**	Range: Disabled, Enabled

There are six identical underfrequency elements, numbered 1 through 6.

The steady-state frequency of a power system is a certain indicator of the existing balance between the generated power and the load. Whenever this balance is disrupted through the loss of an important generating unit or the isolation of part of the system from the rest of the system, the effect is a reduction in frequency. If the control systems of the system generators do not respond fast enough, the system can collapse. A reliable method to quickly restore the balance between load and generation is to automatically disconnect selected loads, based on the actual system frequency. This technique, called "load-shedding," maintains system integrity and minimize widespread outages. After the frequency returns to normal, the load can be restored automatically or manually.

UNDERFREQ 1 SOURCE — This setting is used to select the source for the signal to be measured. The element first checks for a live phase voltage available from the selected source. If voltage is not available, the element attempts to use a phase current. If neither voltage nor current is available, the element does not operate, as it does not measure a parameter below the minimum voltage/current setting.

UNDERFREQ 1 MIN VOLT/AMP — Selects the minimum per unit voltage or current level required to allow the underfrequency element to operate. This threshold is used to prevent an incorrect operation because there is no signal to measure.

UNDERFREQ 1 PICKUP — Selects the level at which the underfrequency element is to pickup. For example, if the system frequency is 60 Hz and the load shedding is required at 59.5 Hz, the setting is 59.50 Hz.

Figure 5-135: Underfrequency logic

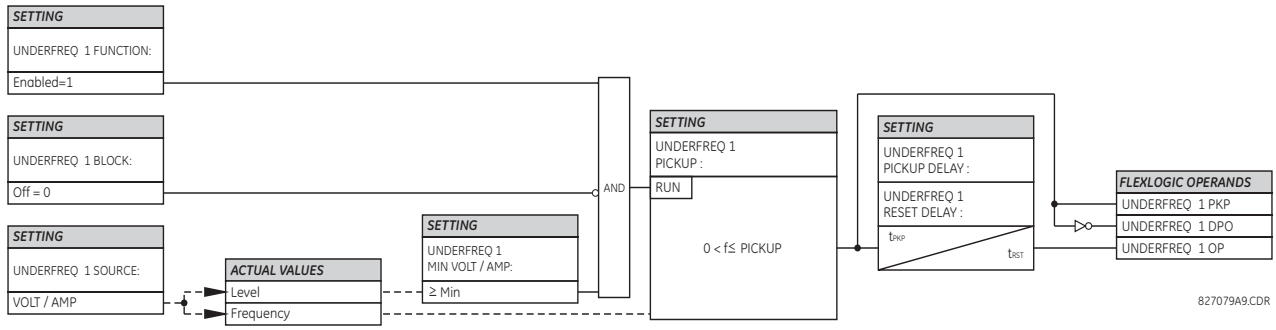

5.8.6 Overfrequency (ANSI 81O)

SETTINGS ⇨⇩ CONTROL ELEMENTS ⇨⇩ OVERFREQUENCY ⇨⇩ OVERFREQUENCY 1(4)

■ OVERFREQUENCY 1 ■	⇔	**OVERFREQ 1 FUNCTION: Disabled**	Range: Disabled, Enabled
	⇩	**OVERFREQ 1 BLOCK: Off**	Range: FlexLogic operand
	⇩	**OVERFREQ 1 SOURCE: SRC 1**	Range: SRC 1, SRC 2, SRC 3, SRC 4
	⇩	**OVERFREQ 1 PICKUP: 60.50 Hz**	Range: 20.00 to 65.00 Hz in steps of 0.01
	⇩	**OVERFREQ 1 PICKUP DELAY: 0.500 s**	Range: 0.000 to 65.535 s in steps of 0.001
	⇩	**OVERFREQ 1 RESET DELAY : 0.500 s**	Range: 0.000 to 65.535 s in steps of 0.001
	⇩	**OVERFREQ 1 TARGET: Self-reset**	Range: Self-reset, Latched, Disabled
	⇩	**OVERFREQ 1 EVENTS: Disabled**	Range: Disabled, Enabled

There are four overfrequency elements, numbered 1 through 4.

A frequency calculation for a given source is made on the input of a voltage or current channel, depending on which is available. The channels are searched for the signal input in the following order: voltage channel A, auxiliary voltage channel, current channel A, and ground current channel. The first available signal is used for frequency calculation.

The steady-state frequency of a power system is an indicator of the existing balance between the generated power and the load. Whenever this balance is disrupted through the disconnection of significant load or the isolation of a part of the system that has a surplus of generation, the effect is an increase in frequency. If the control systems of the generators do not respond fast enough, to quickly ramp the turbine speed back to normal, the overspeed can lead to the turbine trip. The overfrequency element can be used to control the turbine frequency ramp down at a generating location. This element can also be used for feeder reclosing as part of the "after load shedding restoration."

The **OVERFREQ 1 SOURCE** setting selects the source for the signal to be measured.

The **OVERFREQ 1 PICKUP** setting selects the level at which the overfrequency element is to pickup.

Figure 5-136: Overfrequency logic

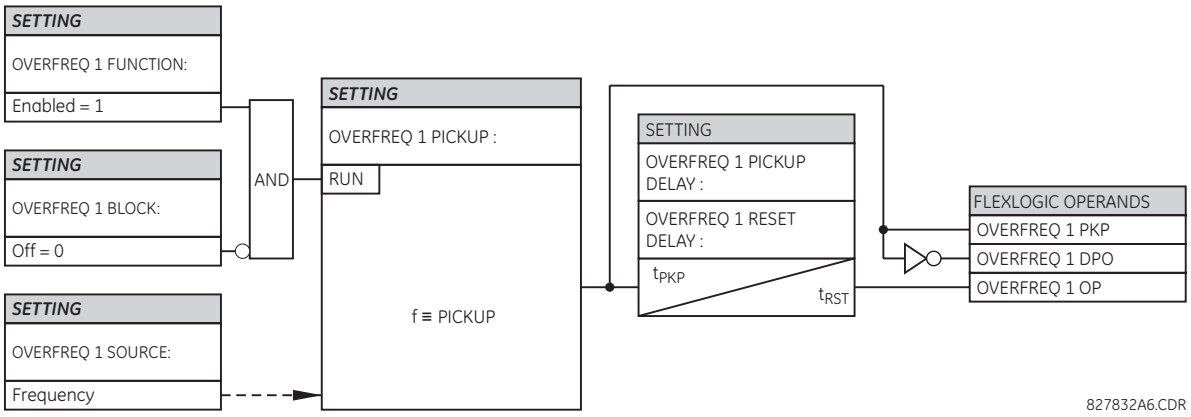

5.8.7 Frequency rate of change (ANSI 81R)

SETTINGS ⇨⇩ CONTROL ELEMENTS ⇨⇩ FREQUENCY RATE OF CHANGE ⇨ FREQUENCY RATE OF CHANGE 1(4)

■ **FREQUENCY RATE OF CHANGE 1**

⇔	**FREQ RATE 1 FUNCTION: Disabled**	Range: Disabled, Enabled
⇕	**FREQ RATE 1 SOURCE: SRC 1**	Range: SRC 1, SRC 2, SRC 3, SRC 4
⇕	**FREQ RATE 1 TREND: Increasing**	Range: Increasing, Decreasing, Bi-directional
⇕	**FREQ RATE 1 PICKUP: 0.50 Hz/sec**	Range: 0.10 to 15.00 Hz/sec in steps of 0.01
⇕	**FREQ RATE 1 OV SUPV PICKUP: 0.700 pu**	Range: 0.100 to 3.000 pu in steps of 0.001
⇕	**FREQ RATE 1 OC SUPV PICKUP: 0.200 pu**	Range: 0.000 to 30.000 pu in steps of 0.001
⇕	**FREQ RATE 1 MIN FREQUENCY: 45.00 Hz**	Range: 20.00 to 80.00 Hz in steps of 0.01
⇕	**FREQ RATE 1 MAX FREQUENCY: 65.00 Hz**	Range: 20.00 to 80.00 Hz in steps of 0.01
⇕	**FREQ RATE 1 PICKUP DELAY: 0.000 s**	Range: 0 to 65.535 s in steps of 0.001
⇕	**FREQ RATE 1 RESET DELAY: 0.000 s**	Range: 0 to 65.535 s in steps of 0.001

⇳	**FREQ RATE 1 BLOCK: Off**	Range: FlexLogic operand
⇳	**FREQ RATE 1 TARGET: Self-Reset**	Range: Self-Reset, Latched, Disabled
⇧	**FREQ RATE 1 EVENTS: Disabled**	Range: Disabled, Enabled

Four independent rate of change of frequency elements are available. The element responds to rate of change of frequency with voltage, current and frequency supervision.

FREQ RATE 1 TREND — This setting configures the element to respond to increasing or decreasing frequency, or to frequency change in either direction.

FREQ RATE 1 PICKUP — This setting specifies an intended df/dt pickup threshold. For applications monitoring a decreasing trend, set **FREQ RATE 1 TREND** to "Decreasing" and specify the pickup threshold accordingly. The operating condition is: $-df/dt > \text{Pickup}$.

For applications monitoring an increasing trend, set **FREQ RATE 1 TREND** to "Increasing" and specify the pickup threshold accordingly. The operating condition is: $df/dt > \text{Pickup}$.

For applications monitoring rate of change of frequency in any direction set **FREQ RATE 1 TREND** to "Bi-Directional" and specify the pickup threshold accordingly. The operating condition is: $\text{abs}(df/dt) > \text{Pickup}$.

FREQ RATE 1 OV SUPV PICKUP — This setting defines the minimum voltage level required for operation of the element. The supervising function responds to the positive-sequence voltage. Use overvoltage supervision to prevent operation under specific system conditions, such as faults.

FREQ RATE 1 OC SUPV PICKUP — This setting defines minimum current level required for operation of the element. The supervising function responds to the positive-sequence current. Typical application includes load shedding. Set the pickup threshold to zero if no overcurrent supervision is required.

FREQ RATE 1 MIN FREQUENCY — This setting defines the minimum frequency level required for operation of the element. The setting can be used to effectively block the feature based on frequency. For example, if the intent is to monitor an increasing trend but only if the frequency is already above certain level, set this setting to the required frequency level.

FREQ RATE 1 MAX FREQUENCY — This setting defines the maximum frequency level required for operation of the element. The setting can be used to effectively block the feature based on frequency. For example, if the intent is to monitor a decreasing trend but only if the frequency is already below a certain level (such as for load shedding), set this setting to the required frequency level.

NOTE

If the signal source assigned to the frequency rate of change element is only set to auxiliary VT, then the minimum voltage supervision is 3 V.

Figure 5-137: Frequency rate of change logic

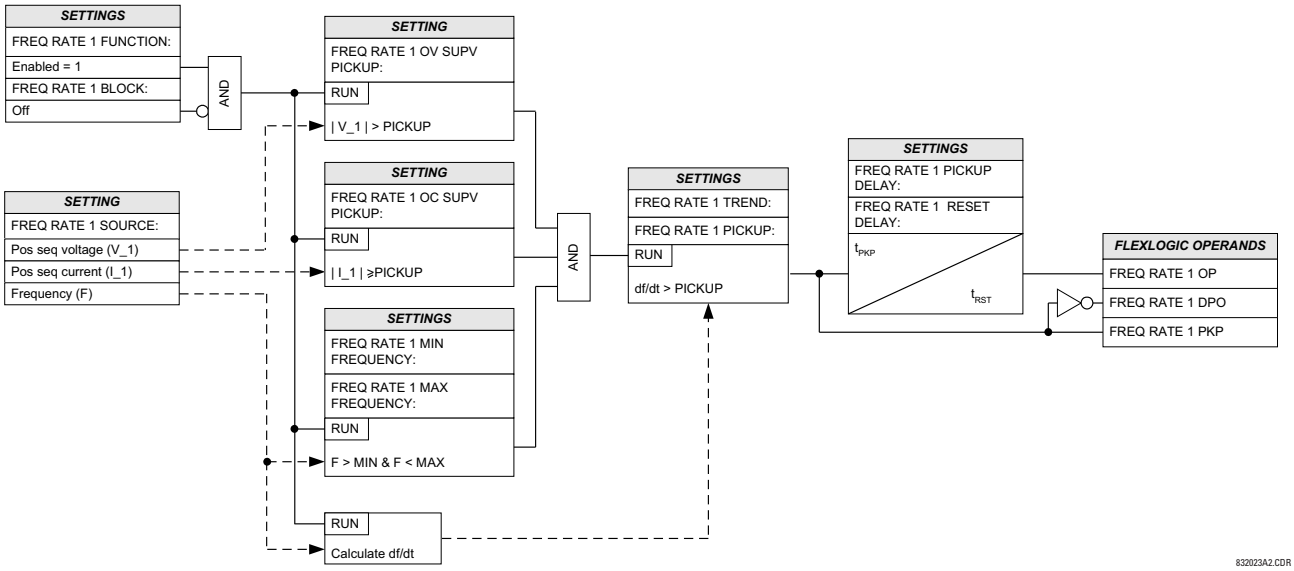

5.8.8 Synchrocheck (ANSI 25)

SETTINGS ⇨⇩ CONTROL ELEMENTS ⇨⇩ SYNCHROCHECK ⇨ SYNCHROCHECK 1(4)

■ SYNCHROCHECK 1 ■	⇔	**SYNCHK1 FUNCTION: Disabled**	Range: Disabled, Enabled
	⇕	**SYNCHK1 BLOCK: Off**	Range: FlexLogic operand
	⇕	**SYNCHK1 V1 SOURCE: SRC 1**	Range: SRC 1, SRC 2, SRC 3, SRC 4
	⇕	**SYNCHK1 V2 SOURCE: SRC 2**	Range: SRC 1, SRC 2, SRC 3, SRC 4
	⇕	**SYNCHK1 MAX VOLT DIFF: 10000 V**	Range: 0 to 400000 V in steps of 1
	⇕	**SYNCHK1 MAX ANGLE DIFF: 30**	Range: 0 to 100° in steps of 1
	⇕	**SYNCHK1 MAX FREQ DIFF: 1.00 Hz**	Range: 0.00 to 2.00 Hz in steps of 0.01
	⇕	**SYNCHK1 MAX FREQ HYSTERESIS: 0.06 Hz**	Range: 0.00 to 0.10 Hz in steps of 0.01
	⇕	**SYNCHK1 DEAD SOURCE SELECT: LV1 and DV2**	Range: None, LV1 and DV2, DV1 and LV2, DV1 or DV2, DV1 Xor DV2, DV1 and DV2
	⇕	**SYNCHK1 DEAD V1 MAX VOLT: 0.30 pu**	Range: 0.00 to 1.25 pu in steps of 0.01
	⇕	**SYNCHK1 DEAD V2 MAX VOLT: 0.30 pu**	Range: 0.00 to 1.25 pu in steps of 0.01
	⇕	**SYNCHK1 LIVE V1 MIN VOLT: 0.70 pu**	Range: 0.00 to 1.25 pu in steps of 0.01
	⇕	**SYNCHK1 LIVE V2 MIN VOLT: 0.70 pu**	Range: 0.00 to 1.25 pu in steps of 0.01

⇳ **SYNCHK1 TARGET: Self-reset** Range: Self-reset, Latched, Disabled

⇧ **SYNCHK1 EVENTS: Disabled** Range: Disabled, Enabled

There are four identical synchrocheck elements available, numbered 1 to 4.

The synchronism check function supervises the paralleling of two parts of a system that are to be joined by the closure of a circuit breaker. The synchrocheck elements are typically used at locations where the two parts of the system are interconnected through at least one other point in the system.

Synchrocheck verifies that the voltages (V1 and V2) on the two sides of the supervised circuit breaker are within set limits of magnitude, angle, and frequency differences. The time that the two voltages remain within the admissible angle difference is determined by the setting of the phase angle difference $\Delta\Phi$ and the frequency difference ΔF (slip frequency). It can be defined as the time it takes the voltage phasor V1 or V2 to traverse an angle equal to $2 \times \Delta\Phi$ at a frequency equal to the frequency difference ΔF. This time is calculated by:

$$T = \frac{1}{\frac{360°}{2 \times \Delta\Phi} \times \Delta F} \quad \textbf{Eq. 5-32}$$

where

$\Delta\Phi$ is phase angle difference in degrees
ΔF is frequency difference in Hz

If one or both sources are de-energized, the synchrocheck programming can allow for closing of the circuit breaker using undervoltage control to bypass the synchrocheck measurements (dead source function).

SYNCHK1 V1 SOURCE — This setting selects the source for voltage V1 (see the Notes section that follows).

SYNCHK1 V2 SOURCE — Selects the source for voltage V2, which must not be the same as used for the V1 (see Notes).

SYNCHK1 MAX VOLT DIFF — Selects the maximum primary voltage difference in volts between the two sources. A primary voltage magnitude difference between the two input voltages below this value is within the permissible limit for synchronism.

SYNCHK1 MAX ANGLE DIFF — Selects the maximum angular difference in degrees between the two sources. An angular difference between the two input voltage phasors below this value is within the permissible limit for synchronism.

SYNCHK1 MAX FREQ HYSTERESIS — Specifies the required hysteresis for the maximum frequency difference condition. The condition becomes satisfied when the frequency difference becomes lower than **SYNCHK1 MAX FREQ DIFF**. Once the Synchrocheck element has operated, the frequency difference must increase above the **SYNCHK1 MAX FREQ DIFF + SYNCHK1 MAX FREQ HYSTERESIS** sum to drop out (assuming the other two conditions, voltage and angle, remain satisfied).

SYNCHK1 DEAD SOURCE SELECT — Selects the combination of dead and live sources that bypass the synchronism check function and permit the breaker to be closed when one or both of the two voltages (V1 or/and V2) are below the maximum voltage threshold. A dead or live source is declared by monitoring the voltage level. Six options are available:

None — Dead Source function is disabled
LV1 and DV2 — Live V1 and Dead V2
DV1 and LV2 — Dead V1 and Live V2
DV1 or DV2 — Dead V1 or Dead V2
DV1 Xor DV2 — Dead V1 exclusive-or Dead V2 (one source is Dead and the other is Live)
DV1 and DV2 — Dead V1 and Dead V2

SYNCHK1 DEAD V1 MAX VOLT — Establishes a maximum voltage magnitude for V1 in 1 'pu'. Below this magnitude, the V1 voltage input used for synchrocheck is considered "Dead" or de-energized.

SYNCHK1 DEAD V2 MAX VOLT — Establishes a maximum voltage magnitude for V2 in 'pu'. Below this magnitude, the V2 voltage input used for synchrocheck is considered "Dead" or de-energized.

SYNCHK1 LIVE V1 MIN VOLT — Establishes a minimum voltage magnitude for V1 in 'pu'. Above this magnitude, the V1 voltage input used for synchrocheck is considered "Live" or energized.

SYNCHK1 LIVE V2 MIN VOLT — This setting establishes a minimum voltage magnitude for V2 in 'pu'. Above this magnitude, the V2 voltage input used for synchrocheck is considered "Live" or energized.

Notes on the synchrocheck function

1. The selected sources for synchrocheck inputs V1 and V2 (which must not be the same source) can include both a three-phase and an auxiliary voltage. The relay automatically selects the specific voltages to be used by the synchrocheck element in accordance with the following table.

Number	V1 or V2 (source Y)	V2 or V1 (source Z)	Auto-selected combination		Auto-selected voltage
			Source Y	Source Z	
1	Phase VTs and Auxiliary VT	Phase VTs and Auxiliary VT	Phase	Phase	VAB
2	Phase VTs and Auxiliary VT	Phase VT	Phase	Phase	VAB
3	Phase VT	Phase VT	Phase	Phase	VAB
4	Phase VT and Auxiliary VT	Auxiliary VT	Phase	Auxiliary	V auxiliary (as set for source Z)
5	Auxiliary VT	Auxiliary VT	Auxiliary	Auxiliary	V auxiliary (as set for selected sources)

The voltages V1 and V2 are matched automatically so that the corresponding voltages from the two sources are used to measure conditions. A phase to phase voltage is used if available in both sources; if one or both of the Sources have only an auxiliary voltage, this voltage is used. For example, if an auxiliary voltage is programmed to VAG, the synchrocheck element automatically selects VAG from the other source. If the comparison is required on a specific voltage, the user can externally connect that specific voltage to auxiliary voltage terminals and then use this "Auxiliary Voltage" to check the synchronism conditions.

If using a single CT/VT module with both phase voltages and an auxiliary voltage, ensure that only the auxiliary voltage is programmed in one of the sources to be used for synchrocheck. An exception is that synchronism cannot be checked between Delta connected phase VTs and a Wye connected auxiliary voltage.

2. The relay measures frequency and Volts/Hz from an input on a given source with priorities as established by the configuration of input channels to the source. The relay uses the phase channel of a three-phase set of voltages if programmed as part of that source. The relay uses the auxiliary voltage channel only if that channel is programmed as part of the Source and a three-phase set is not.

Figure 5-138: Synchrocheck logic

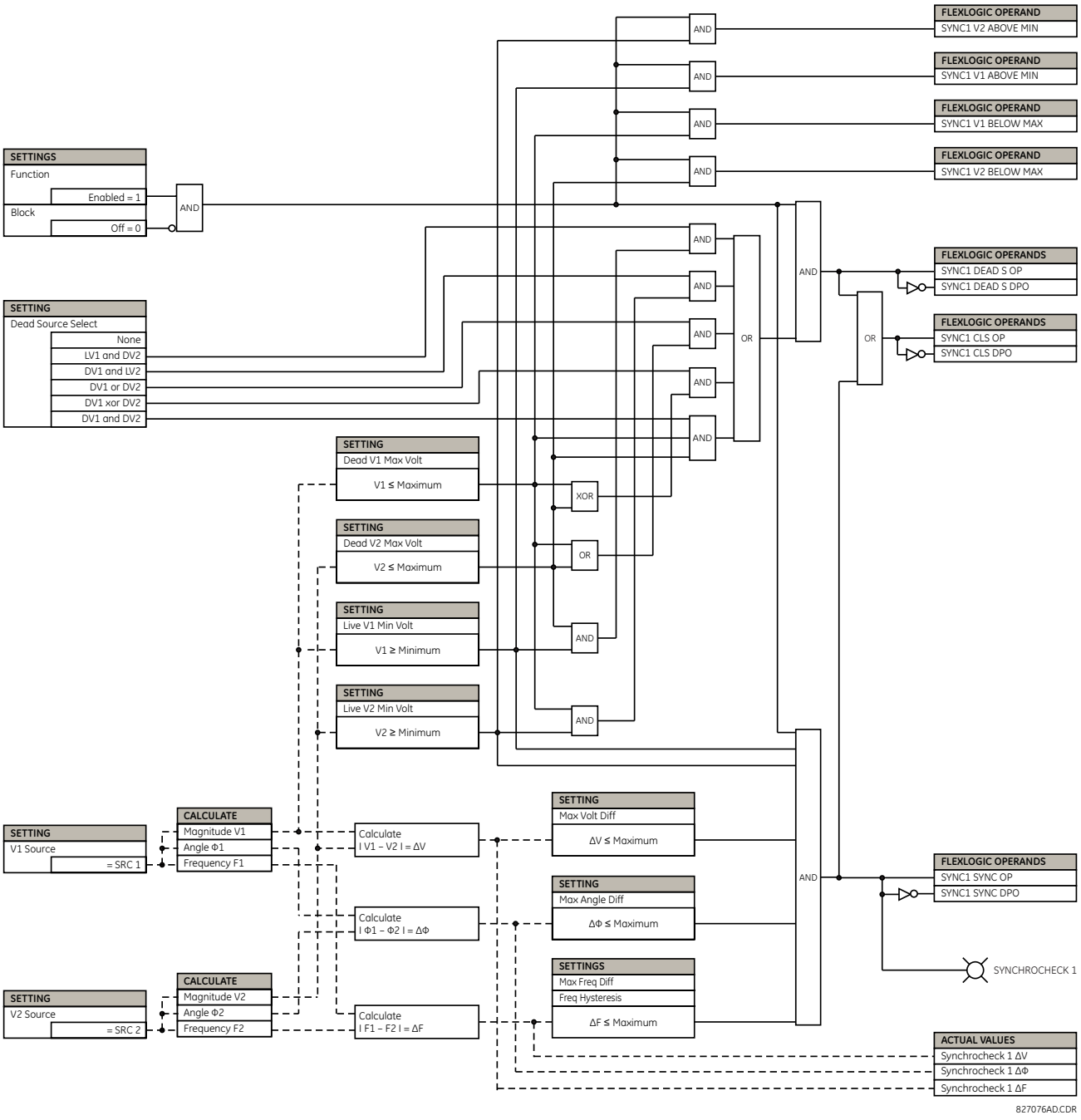

5.8.9 Autoreclose (ANSI 79)

SETTINGS ⇨⇩ CONTROL ELEMENTS ⇨⇩ AUTORECLOSE ⇨ AUTORECLOSE 1(2)

■ **AUTORECLOSE 1** ■	⇔	**AR1 FUNCTION: Disabled**	Range: Disabled, Enabled
	⇕	**AR1 INITIATE: Off**	Range: FlexLogic operand

⇳	**AR1 BLOCK: Off**	Range: FlexLogic operand
⇳	**AR1 MAX NUMBER OF SHOTS: 1**	Range: 1, 2, 3, 4
⇳	**AR1 REDUCE MAX TO 1: Off**	Range: FlexLogic operand
⇳	**AR1 REDUCE MAX TO 2: Off**	Range: FlexLogic operand
⇳	**AR1 REDUCE MAX TO 3: Off**	Range: FlexLogic operand
⇳	**AR1 MANUAL CLOSE: Off**	Range: FlexLogic operand
⇳	**AR1 MNL RST FRM LO: Off**	Range: FlexLogic operand
⇳	**AR1 RESET LOCKOUT IF BREAKER CLOSED: Off**	Range: Off, On
⇳	**AR1 RESET LOCKOUT ON MANUAL CLOSE: Off**	Range: Off, On
⇳	**AR1 BKR CLOSED: Off**	Range: FlexLogic operand
⇳	**AR1 BKR OPEN: Off**	Range: FlexLogic operand
⇳	**AR1 BLK TIME UPON MNL CLS: 10.000 s**	Range: 0.00 to 655.35 s in steps of 0.01
⇳	**AR1 DEAD TIME 1: 1.000 s**	Range: 0.00 to 655.35 s in steps of 0.01
⇳	**AR1 DEAD TIME 2: 2.000 s**	Range: 0.00 to 655.35 s in steps of 0.01
⇳	**AR1 DEAD TIME 3: 3.000 s**	Range: 0.00 to 655.35 s in steps of 0.01
⇳	**AR1 DEAD TIME 4: 4.000 s**	Range: 0.00 to 655.35 s in steps of 0.01
⇳	**AR1 ADD DELAY 1: Off**	Range: FlexLogic operand
⇳	**AR1 DELAY 1: 0.000 s**	Range: 0.00 to 655.35 s in steps of 0.01
⇳	**AR1 ADD DELAY 2: Off**	Range: FlexLogic operand
⇳	**AR1 DELAY 2: 0.000 s**	Range: 0.00 to 655.35 s in steps of 0.01
⇳	**AR1 RESET LOCKOUT DELAY: 60.000**	Range: 0.00 to 655.35 s in steps of 0.01
⇳	**AR1 RESET TIME: 60.000 s**	Range: 0.00 to 655.35 s in steps of 0.01
⇳	**AR1 INCOMPLETE SEQ TIME: 5.000 s**	Range: 0.00 to 655.35 s in steps of 0.01
⇧	**AR1 EVENTS: Disabled**	Range: Disabled, Enabled

The F60 is provided with this optional feature, specified as an option at the time of ordering. Using the order code for your device, see the order codes in chapter 2 for details.

The maximum number of autoreclosure elements available is equal to the number of installed CT banks.

The autoreclosure feature is intended for use with transmission and distribution lines, in three-pole tripping schemes for single breaker applications. Up to four selectable reclosures "shots" are possible prior to locking out. Each shot has an independently settable dead time. The protection settings can be changed between shots if required, using FlexLogic. Logic inputs are available for disabling or blocking the scheme.

Faceplate panel LEDs indicate the state of the autoreclose scheme as follows:

- Reclose Enabled — The scheme is enabled and can reclose if initiated
- Reclose Disabled — The scheme is disabled
- Reclose In Progress — An autoreclosure has been initiated but the breaker has not yet been signaled to close
- Reclose Locked Out — The scheme has generated the maximum number of breaker closures allowed and, as the fault persists, does not close the breaker again; known as "Lockout." The scheme can also be sent in "Lockout" when the incomplete sequence timer times out or when a block signal occurs while in "reclose in progress." The scheme must be reset from Lockout in order to perform reclose for further faults.

The reclosure scheme is considered enabled when all of the following conditions are true:

- The **AR1 FUNCTION** is set to “Enabled”
- The scheme is not in the "Lockout" state
- The "Block" input is not asserted
- The **AR1 BLK TIME UPON MNL CLS** timer is not active

The autoreclose scheme is initiated by a trip signal from any selected protection feature operand. The scheme is initiated provided the circuit breaker is in the closed state before protection operation.

The reclose-in-progress (RIP) is set when a reclosing cycle begins following a reclose initiate signal. Once the cycle is successfully initiated, the RIP signal seals-in and the scheme continues through its sequence until one of the following conditions is satisfied:

- The close signal is issued when the dead timer times out, or
- The scheme goes to lockout

While RIP is active, the scheme checks that the breaker is open and the shot number is below the limit, and then begins measuring the dead time.

Each of the four possible shots has an independently settable dead time. Two additional timers can be used to increase the initial set dead times 1 to 4 by a delay equal to **AR1 DELAY 1** or **AR1 DELAY 2** or the sum of these two delays depending on the selected settings. This offers enhanced setting flexibility using FlexLogic operands to turn the two additional timers “on” and “off.” These operands can possibly include AR1 SHOT CNT =n, SETTING GROUP ACT 1, and so on. The autoreclose provides up to maximum 4 selectable shots. Maximum number of shots can be dynamically modified through the settings **AR1 REDUCE MAX TO 1 (2, 3)**, using the appropriate FlexLogic operand.

Scheme lockout blocks all phases of the reclosing cycle, preventing automatic reclosure, if any of the following occurs:

- The maximum shot number was reached
- A "Block" input is in effect (for instance, Breaker Failure or bus differential protection operated)
- The "Incomplete Sequence" timer times out

The recloser is latched in the Lockout state until a "reset from lockout" signal is asserted, either from a manual close of the breaker or from a manual reset command (local or remote). The reset from lockout can be accomplished by operator command, by manually closing the breaker, or whenever the breaker has been closed and stays closed for a preset time.

After the dead time elapses, the scheme issues the close signal. The close signal is latched until the breaker closes or the scheme goes to Lockout.

A reset timer output resets the recloser following a successful reclosure sequence. The reset time is based on the breaker "reclaim time," which is the minimum time required between successive reclose sequences.

5.8.9.1 Settings

AR1 INITIATE — Selects the FlexLogic operand that initiates the scheme, typically the trip signal from protection.

AR1 BLOCK — Selects the FlexLogic operand that blocks the autoreclosure initiate (it can be from the breaker failure, bus differential protection, and so on).

AR1 MAX NUMBER OF SHOTS — Specifies the number of reclosures that can be attempted before reclosure goes to "Lockout" because the fault is permanent.

AR1 REDUCE MAX TO 1(3) — Selects the FlexLogic operand that changes the maximum number of shots from the initial setting to 1, 2, or 3, respectively.

AR1 MANUAL CLOSE — Selects the logic input set when the breaker is manually closed.

AR1 MNL RST FRM LO — Selects the FlexLogic operand that resets the autoreclosure from Lockout condition. Typically this is a manual reset from lockout, local or remote.

AR1 RESET LOCKOUT IF BREAKER CLOSED — This setting allows the autoreclose scheme to reset from Lockout if the breaker has been manually closed and stays closed for a preset time. In order for this setting to be effective, disable the next setting (**AR1 RESET LOCKOUT ON MANUAL CLOSE**).

AR1 RESET LOCKOUT ON MANUAL CLOSE — This setting allows the autoreclose scheme to reset from Lockout when the breaker is manually closed regardless if the breaker remains closed or not. This setting overrides the previous setting (**AR1 RESET LOCKOUT IF BREAKER CLOSED**).

AR1 BLK TIME UPON MNL CLS — The autoreclose scheme can be disabled for a programmable time delay after the associated circuit breaker is manually closed. This prevents reclosing onto a fault after a manual close. This delay must be longer than the slowest expected trip from any protection not blocked after manual closing. If no overcurrent trips occur after a manual close and this time expires, the autoreclose scheme is enabled.

AR1 DEAD TIME 1 to **AR1 DEAD TIME 4** — These are the intentional delays before first, second, third, and fourth breaker automatic reclosures (1st, 2nd, and 3rd shots), respectively. Set them longer than the estimated deionizing time following a three pole trip.

AR1 ADD DELAY 1 — This setting selects the FlexLogic operand that introduces an additional delay (Delay 1) to the initial set Dead Time (1 to 4). When this setting is "Off," Delay 1 is by-passed.

AR1 DELAY 1 — This setting establishes the extent of the additional dead time Delay 1.

AR1 ADD DELAY 2 — This setting selects the FlexLogic operand that introduces an additional delay (Delay 2) to the initial set Dead Time (1 to 4). When this setting is "Off", Delay 2 is by-passed.

AR1 DELAY 2 — This setting establishes the extent of the additional dead time Delay 2.

AR1 RESET LOCKOUT DELAY — This setting establishes how long the breaker stays closed after a manual close command, in order for the autorecloser to reset from Lockout.

AR1 RESET TIME — A reset timer output resets the recloser following a successful reclosure sequence. The setting is based on the breaker "reclaim time," which is the minimum time required between successive reclose sequences.

AR1 INCOMPLETE SEQ TIME — This timer defines the maximum time interval allowed for a single reclose shot. It is started whenever a reclosure is initiated and is active when the scheme is in the "reclose-in-progress" state. If all conditions allowing a breaker closure are not satisfied when this time expires, the scheme goes to Lockout.

This timer must be set to a delay less than the reset timer.

Figure 5-139: Autoreclosure logic (Sheet 1 of 2)

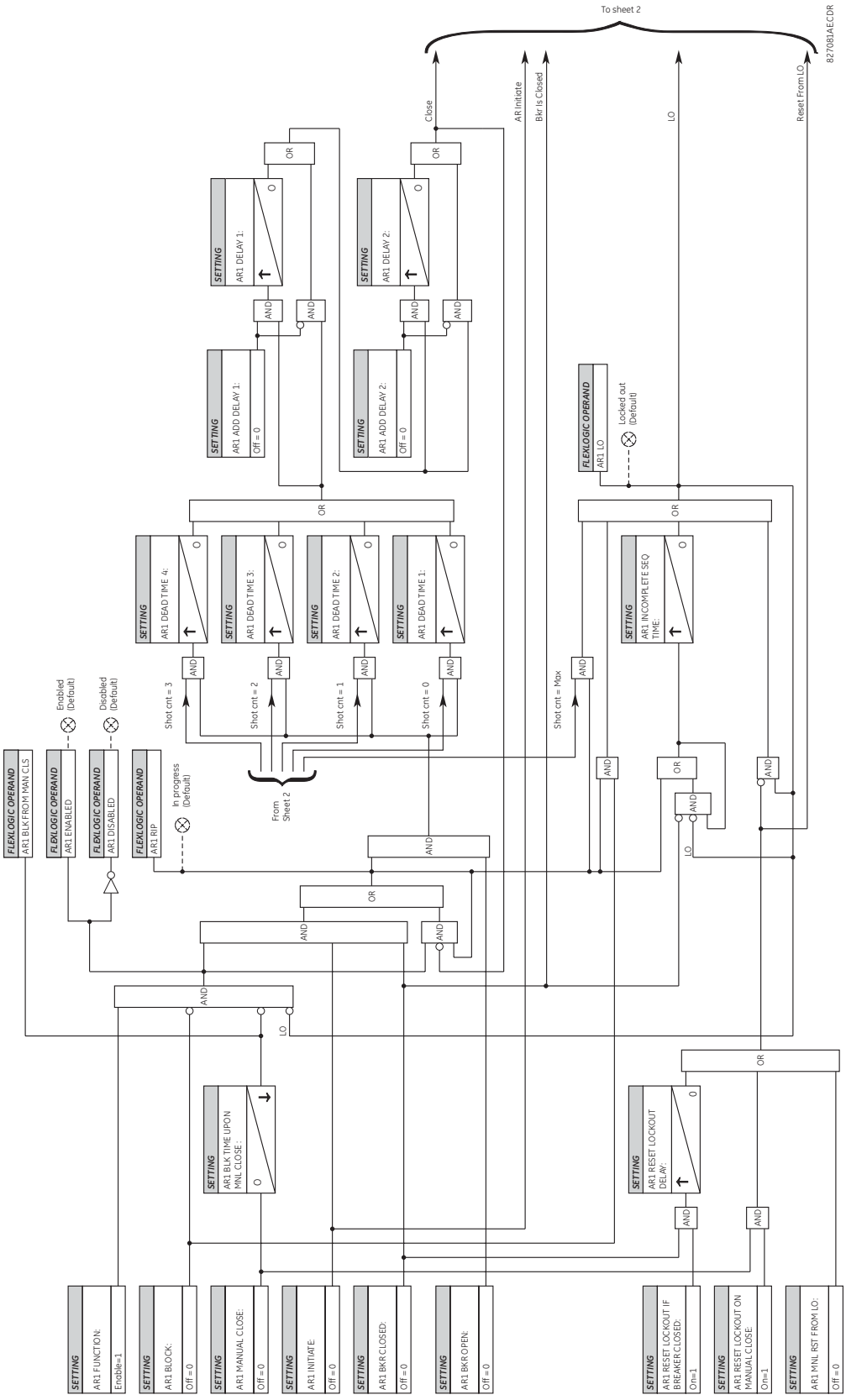

Figure 5-140: Autorecloser logic (Sheet 2 of 2)

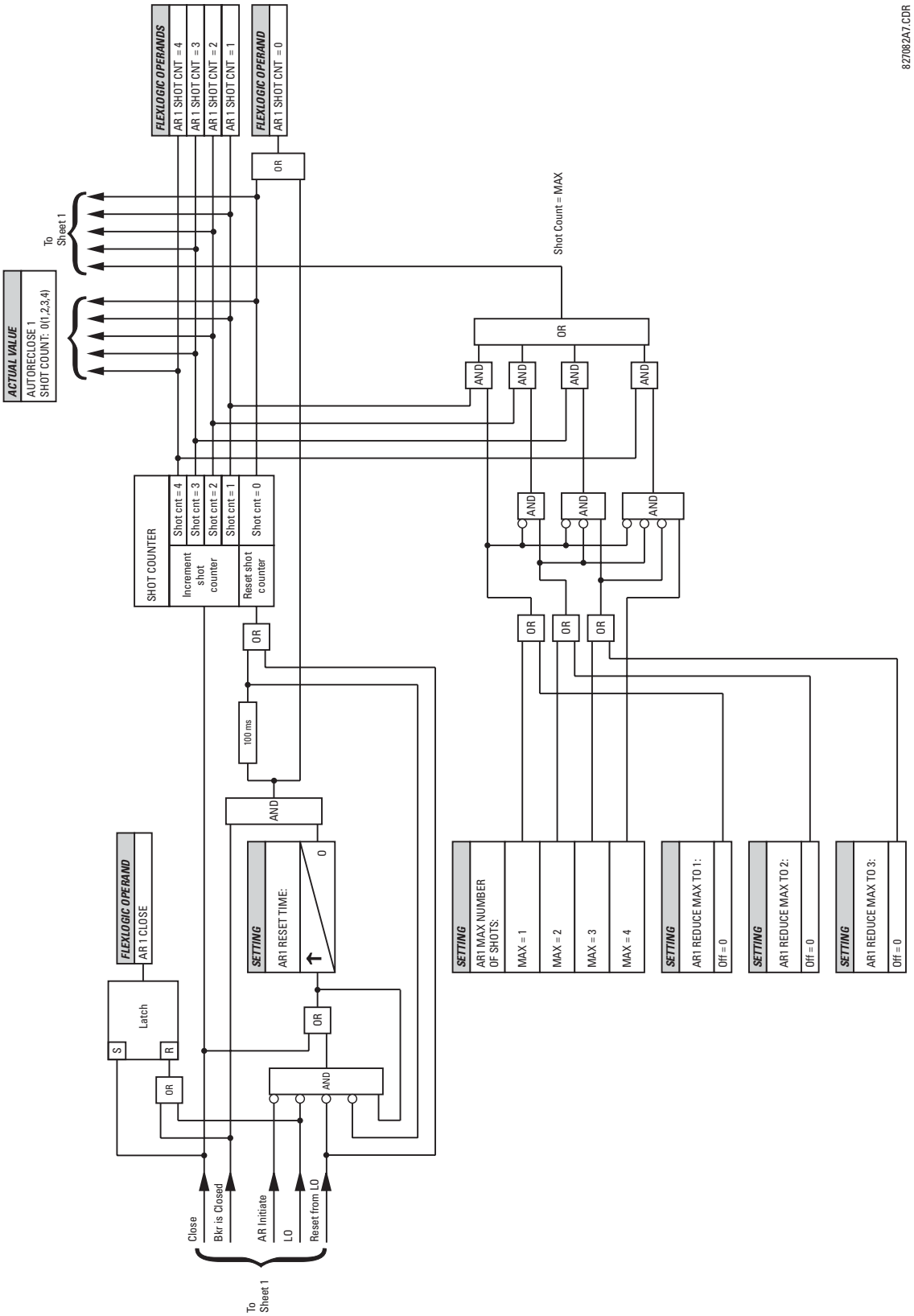

Figure 5-141: Single shot autoreclosing sequence - permanent fault

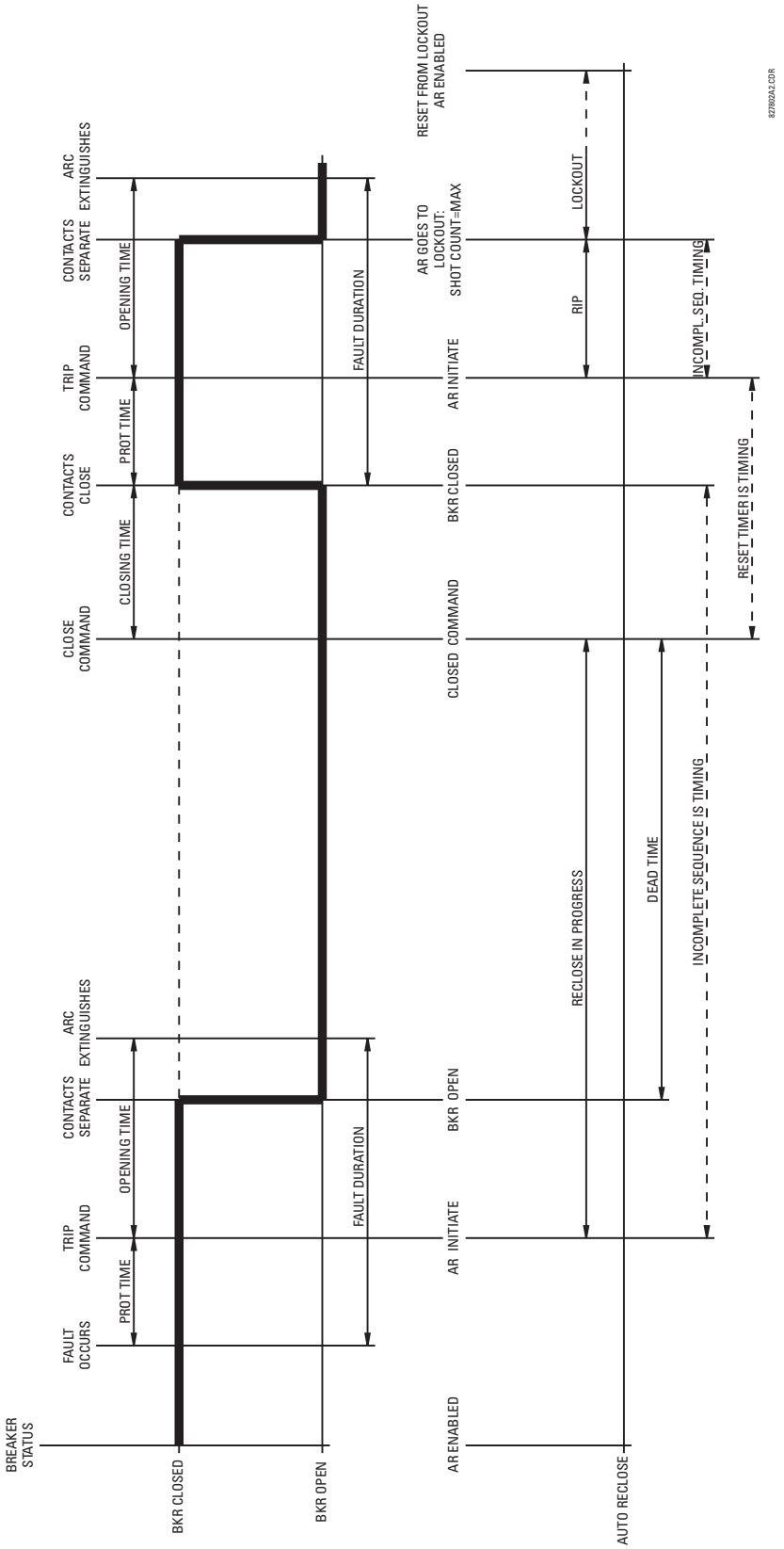

5.8.10 Digital elements

SETTINGS ⇨⇩ CONTROL ELEMENTS ⇨⇩ DIGITAL ELEMENTS ⇨ DIGITAL ELEMENT 1(48)

■ DIGITAL ELEMENT 1 ■	⇔	**DIGITAL ELEMENT 1 FUNCTION: Disabled** — Range: Disabled, Enabled
	⇩	**DIG ELEM 1 NAME: Dig Element 1** — Range: 16 alphanumeric characters
	⇩	**DIG ELEM 1 INPUT: Off** — Range: FlexLogic operand
	⇩	**DIG ELEM 1 PICKUP DELAY: 0.000 s** — Range: 0.000 to 999999.999 s in steps of 0.001
	⇩	**DIG ELEM 1 RESET DELAY: 0.000 s** — Range: 0.000 to 999999.999 s in steps of 0.001
	⇩	**DIGITAL ELEMENT 1 PICKUP LED: Enabled** — Range: Disabled, Enabled
	⇩	**DIG ELEM 1 BLOCK: Off** — Range: FlexLogic operand
	⇩	**DIGITAL ELEMENT 1 TARGET: Self-reset** — Range: Self-reset, Latched, Disabled
	⇩	**DIGITAL ELEMENT 1 EVENTS: Disabled** — Range: Disabled, Enabled

5

NOTE

Digital elements run once per power system cycle.

As such they can easily fail to react to an input signal or a block signal with a duration less than one power system cycle. This also means that digital element output can react up to one power system cycle later than the pickup and reset delay settings indicate.

Do not use digital elements with transient signals, such as communications commands. Do not use digital elements where random delays of up to one cycle cannot be tolerated, such as in high speed protection.

There are 48 identical digital elements available, numbered 1 to 48. A digital element can monitor any FlexLogic operand and present a target message and/or enable events recording depending on the output operand state. The digital element settings include a name to be referenced in any target message, a blocking input from any selected FlexLogic operand, and a timer for pickup and reset delays for the output operand.

DIGITAL ELEMENT 1 INPUT — Selects a FlexLogic operand to be monitored by the digital element.

DIGITAL ELEMENT 1 PICKUP DELAY — Sets the required time delay from element pickup to element operation. If a pickup delay is not required, set to "0," To avoid nuisance alarms, set the delay greater than the operating time of the breaker.

DIGITAL ELEMENT 1 RESET DELAY — Sets the time delay to reset. If a reset delay is not required, set to "0."

DIGITAL ELEMENT 1 PICKUP LED — This setting enables or disabled the digital element pickup LED. When set to "Disabled," the operation of the pickup LED is blocked.

Figure 5-142: Digital element logic

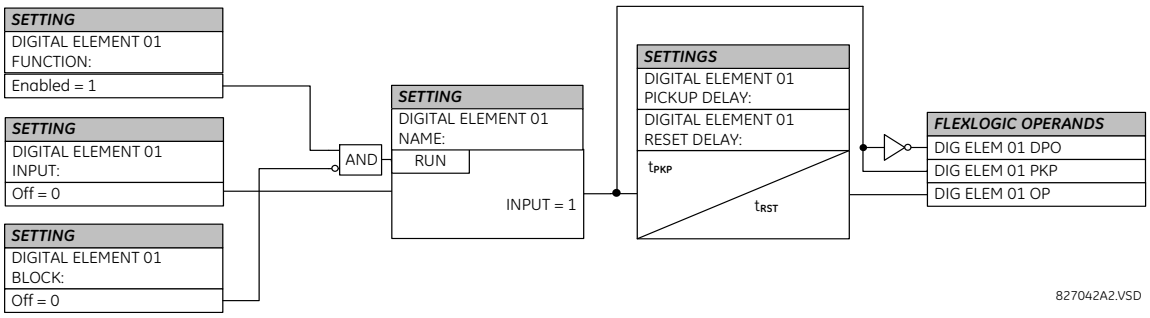

Circuit monitoring applications

Some versions of the digital input modules include an active voltage monitor circuit connected across form-A contacts. The voltage monitor circuit limits the trickle current through the output circuit (see technical specifications for form-A).

As long as the current through the voltage monitor is above a threshold (see technical specifications for form-A), the Cont Op 1 VOn FlexLogic operand is set (for contact input 1—corresponding operands exist for each contact output). If the output circuit has a high resistance or the DC current is interrupted, the trickle current drops below the threshold and the Cont Op 1 VOff FlexLogic operand is set. Consequently, the state of these operands can be used as indicators of the integrity of the circuits in which form-A contacts are inserted.

Example 1: Breaker trip circuit integrity monitoring

In many applications it is desired to monitor the breaker trip circuit integrity so that problems can be detected before a trip operation is required. The circuit is considered to be healthy when the voltage monitor connected across the trip output contact detects a low level of current, well below the operating current of the breaker trip coil. If the circuit presents a high resistance, the trickle current falls below the monitor threshold, and an alarm is declared.

In most breaker control circuits, the trip coil is connected in series with a breaker auxiliary contact that is open when the breaker is open (see figure). To prevent unwanted alarms in this situation, the trip circuit monitoring logic must include the breaker position.

Figure 5-143: Trip circuit example 1

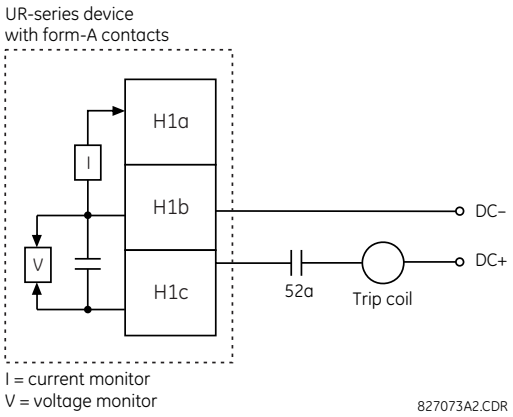

Assume the output contact H1 is a trip contact. Using the contact output settings, this output is given an ID name; for example, "Cont Op 1." Assume a 52a breaker auxiliary contact is connected to contact input H5a to monitor breaker status. Using the contact input settings, this input is given an ID name, for example, "Cont Ip 1," and is set "On" when the breaker is closed. The settings to use digital element 1 to monitor the breaker trip circuit are indicated (EnerVista example shown).

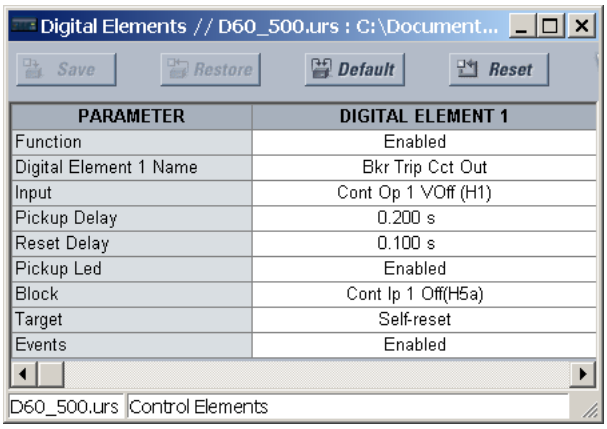

Example 2: Breaker trip circuit integrity monitoring

If it is required to monitor the trip circuit continuously, independent of the breaker position (open or closed), a method to maintain the monitoring current flow through the trip circuit when the breaker is open must be provided (as shown in the following figure). This can be achieved by connecting a suitable resistor (see figure) across the auxiliary contact in the trip circuit. In this case, it is not required to supervise the monitoring circuit with the breaker position – the **BLOCK** setting is selected to "Off." In this case, the settings are as follows (EnerVista example shown).

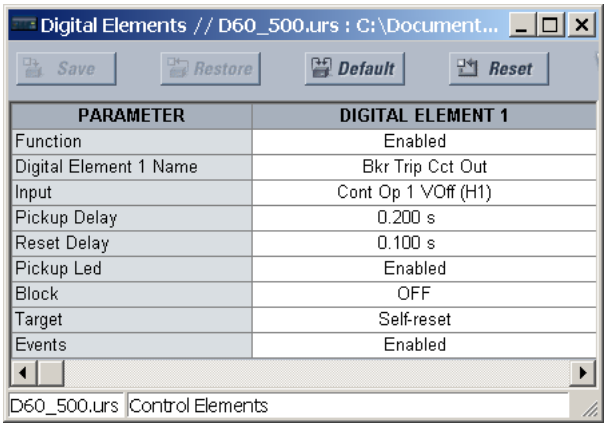

Figure 5-144: Trip circuit example 2

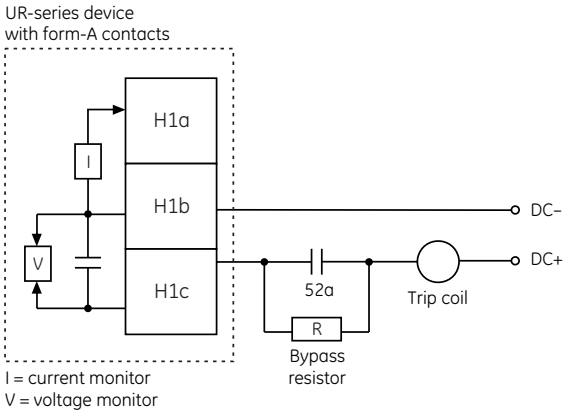

Values for resistor "R"

Power supply	Resistance	Power
24 V DC	1000 Ω	2 W
30 V DC	5000 Ω	2 W
48 V DC	10000 Ω	2 W
110 V DC	25000 Ω	5 W
125 V DC	25000 Ω	5 W
250 V DC	50000 Ω	5 W

NOTE

The wiring connection for two examples above is applicable to both form-A contacts with voltage monitoring and solid-state contact with voltage monitoring.

5.8.11 Digital counters

SETTINGS ⇨⇩ CONTROL ELEMENTS ⇨⇩ DIGITAL COUNTERS ⇨⇩ COUNTER 1(8)

■ COUNTER 1 ■	⇔	**COUNTER 1 FUNCTION: Disabled**	Range: Disabled, Enabled
	⇩	**COUNTER 1 NAME: Counter 1**	Range: 12 alphanumeric characters
	⇩	**COUNTER 1 UNITS:**	Range: six alphanumeric characters
	⇩	**COUNTER 1 PRESET: 0**	Range: –2,147,483,648 to +2,147,483,647
	⇩	**COUNTER 1 COMPARE: 0**	Range: –2,147,483,648 to +2,147,483,647
	⇩	**COUNTER 1 UP: Off**	Range: FlexLogic operand
	⇩	**COUNTER 1 DOWN: Off**	Range: FlexLogic operand
	⇩	**COUNTER 1 BLOCK: Off**	Range: FlexLogic operand
	⇩	**CNT1 SET TO PRESET: Off**	Range: FlexLogic operand
	⇩	**COUNTER 1 RESET: Off**	Range: FlexLogic operand
	⇩	**COUNT1 FREEZE/RESET: Off**	Range: FlexLogic operand
	⇩	**COUNT1 FREEZE/COUNT: Off**	Range: FlexLogic operand

There are eight identical digital counters, numbered from 1 to 8. A digital counter counts the number of state transitions from Logic 0 to Logic 1. The counter is used to count operations such as the pickups of an element, the changes of state of an external contact (for example, breaker auxiliary switch), or pulses from a watt-hour meter.

COUNTER 1 UNITS — Assigns a label to identify the unit of measure pertaining to the digital transitions to be counted. The units label appears in the corresponding actual values status.

COUNTER 1 PRESET — Sets the count to a required preset value before counting operations begin, as in the case where a substitute relay is to be installed in place of an in-service relay, or while the counter is running.

COUNTER 1 COMPARE — Sets the value to which the accumulated count value is compared. Three FlexLogic output operands are provided to indicate if the present value is 'more than (HI)', 'equal to (EQL)', or 'less than (LO)' the set value.

COUNTER 1 UP — Selects the FlexLogic operand for incrementing the counter. If an enabled UP input is received when the accumulated value is at the limit of +2,147,483,647 counts, the counter rolls over to –2,147,483,648.

COUNTER 1 DOWN — Selects the FlexLogic operand for decrementing the counter. If an enabled DOWN input is received when the accumulated value is at the limit of –2,147,483,648 counts, the counter rolls over to +2,147,483,647.

COUNTER 1 BLOCK — Selects the FlexLogic operand for blocking the counting operation. All counter operands are blocked.

CNT1 SET TO PRESET — Selects the FlexLogic operand used to set the count to the preset value. The counter sets to the preset value in the following situations:

- When the counter is enabled and the **CNT1 SET TO PRESET** operand has the value 1 (when the counter is enabled and **CNT1 SET TO PRESET** operand is 0, the counter sets to 0)
- When the counter is running and the **CNT1 SET TO PRESET** operand changes the state from 0 to 1 (**CNT1 SET TO PRESET** changing from 1 to 0 while the counter is running has no effect on the count)
- When a reset or reset/freeze command is sent to the counter and the **CNT1 SET TO PRESET** operand has the value 1 (when a reset or reset/freeze command is sent to the counter and the **CNT1 SET TO PRESET** operand has the value 0, the counter sets to 0)

COUNTER 1 RESET — Selects the FlexLogic operand for setting the count to either "0" or the preset value depending on the state of the **CNT1 SET TO PRESET** operand.

COUNTER 1 FREEZE/RESET — Selects the FlexLogic operand for capturing (freezing) the accumulated count value into a separate register with the date and time of the operation, and resetting the count to "0."

COUNTER 1 FREEZE/COUNT — Selects the FlexLogic operand for capturing (freezing) the accumulated count value into a separate register with the date and time of the operation, and continuing counting. The present accumulated value and captured frozen value with the associated date/time stamp are available as actual values. If control power is interrupted, the accumulated and frozen values are saved into non-volatile memory during the power-down operation.

Figure 5-145: Digital counter logic

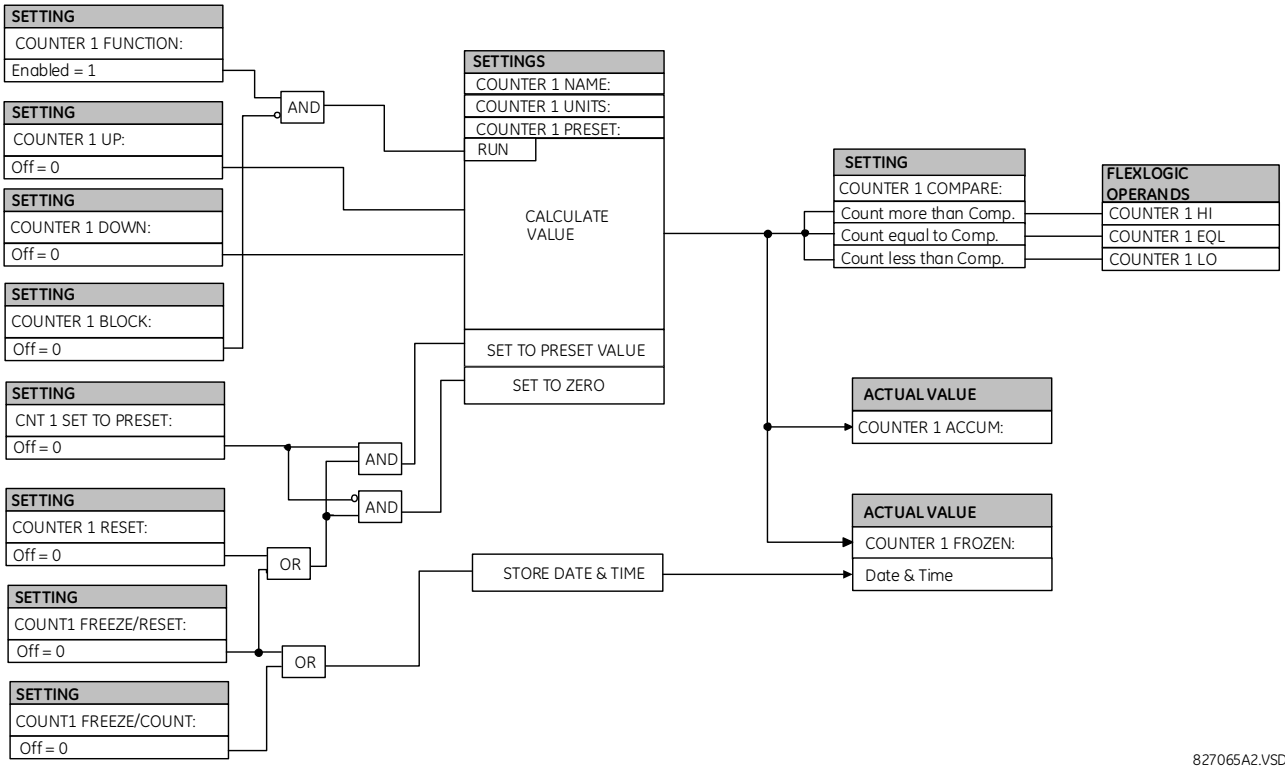

5.9 Monitoring elements

5.9.0.1 Menu

SETTINGS ⇨⇩ CONTROL ELEMENTS ⇨⇩ MONITORING ELEMENTS

■ MONITORING ■ ELEMENTS	⇔	■ HI-Z ■	See below
	⇳	■ BREAKER 1 ■ ARCING CURRENT	See page 5-277
	⇳	■ BREAKER 2 ■ ARCING CURRENT	
	⇳	■ BREAKER ■ FLASHOVER 1	See page 5-281
	⇳	■ BREAKER ■ FLASHOVER 2	
	⇳	■ BREAKER RESTRIKE 1 ■	See page 5-286
	⇳	■ INCIPIENT FAULT 1 ■	See page 5-288
	⇳	■ INCIPIENT FAULT 2 ■	

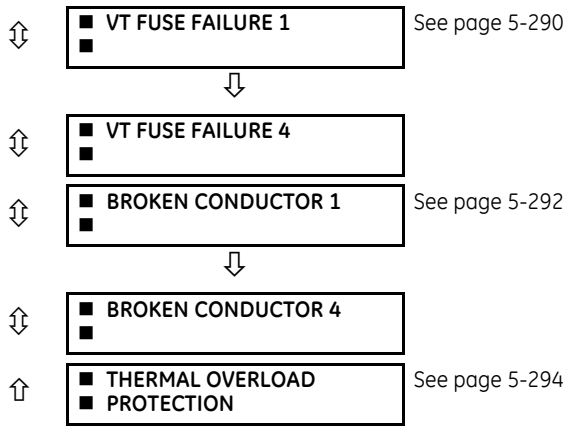

5.9.0.2 High-impedance fault detection

SETTINGS ⇨⇩ CONTROL ELEMENTS ⇨⇩ MONITORING ELEMENTS ⇨⇩ HI-Z

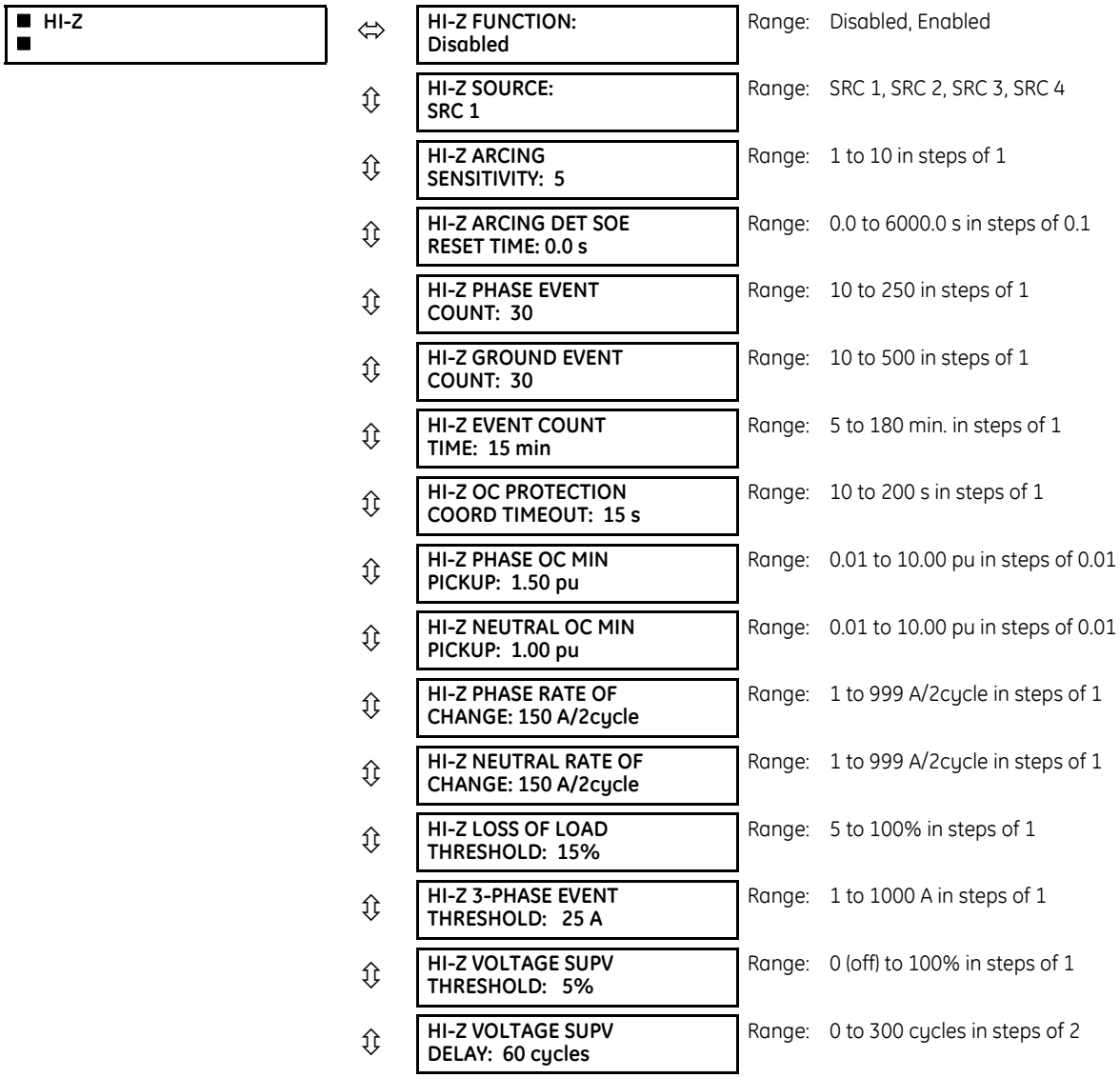

⇳	**HI-Z EVEN HARMONIC RESTRAINT: 20%**	Range: 0 to 100% in steps of 1
⇳	**HI-Z TARGET: Self-reset**	Range: Self-reset, Latched, Disabled
⇧	**HI-Z EVENTS: Disabled**	Range: Disabled, Enabled

Some faults in overhead distribution feeders are characterized by low fault current due to high ground resistance. If the fault current is in the order of expected unbalance load or less, it cannot be reliably detected by overcurrent protection. These faults are classified as high-impedance (Hi-Z) faults. Since a Hi-Z fault is not accompanied by excessive current, it is generally not dangerous to the electrical installation except for some damage to the overhead conductor at the fault location. However, an undetected Hi-Z fault is a risk to people and property as well as having a potential to evolve into a full-blown fault.

The following event types are associated with Hi-Z faults. It is assumed that for all cases that ground is involved.

- **High impedance fault** — A fault with fault impedance sufficiently high such that it is not detected by overcurrent protection
- **High impedance, downed conductor fault** — A high impedance fault for which the primary conductor is no longer intact on pole top insulators, but instead is in contact with earth or a grounded object
- **Arcing fault** — Any high impedance fault which exhibits arcing

Combinations of these events are possible: for example, an arcing high impedance, downed conductor fault. The Hi-Z element is intended to detect high impedance faults that arc and to differentiate those that are downed conductors from those that are not. It should be noted that no known technology can detect all Hi-Z faults.

The Hi-Z element was primarily designed for solidly grounded systems. The similar Hi-Z element in the DFM200 relay has been tested with some success on impedance grounded systems as well. However, there are no guarantees of certain operation of the high impedance fault detection element on non-solidly grounded systems.

The Hi-Z data collection consists of RMS Data Capture and Hi-Z Data capture:

- **RMS Data Capture** — The RMS data captures are triggered by two-cycle Hi-Z overcurrent conditions, loss of load conditions, and high arc confidence conditions. Captures triggered by loss of load and high arc confidence conditions are saved to a temporary capture table, and deleted if the event does not result in an Arcing or Downed Conductor condition. The relay maintains a history of four captures and utilizes a combination of age, priority and access for determining which capture to save.

  The RMS data capture contains the two-cycle RMS values for the voltage and current for each of the phases and current for the neutral channel. The capture frequency is half the system frequency. Each capture contains 1800 points.
- **High-Z Data Capture** — Hi-Z Data Captures are triggered and maintained in an identical manner as RMS Data Captures. The relay maintains four captures of 300 records each. The capture frequency is 1 Hz and the data collected is defined in the following two tables.

Table 5-41: Hi-Z specific data

#	Name	Description
0	EadCounts	Total number of EAD counts for the phase
1	ArcConfidence	ArcConfidence for the phase
2	AccumArcConf	Accumulated ArcConfidence for the phase
3	RmsCurrent	The 2-cycle RMS current for the phase
4	HighROC	Flag indicating a high rate of change was detected
5	IOC	Flag indicating an instantaneous 2-cycle overcurrent was detected
6	LossOfLoad	Flag indicating a loss of load was detected
7	EadZeroed	Flag indicating that this phase's EAD table was cleared
8	HighZArmed	Flag indicating that this phase is armed for a high-Z detection
9	VoltageDip	Flag indicating that a voltage dip was detected on this phase
10	HighEad	Flag indicating that a high arc confidence occurred on this phase

#	Name	Description
11	ArcBurst	Flag indicating that an arc burst was identified on this phase
12	VDisturbanceCc	Cycle-to-cycle voltage disturbance
13	VDisturbanceAbs	Absolute voltage disturbance
14	HarmonicRestraint	Harmonic Restraint

Table 5-42: Hi-Z capture data

#	Name	Description
1	StatusMask	Bit-mask of the algorithm state (16 bits) BIT_ARCING BIT_DOWNED_COND BIT_ARC_TREND BIT_PHASE_A BIT_PHASE_B BIT_PHASE_C BIT_PHASE_N BIT_IOC_A BIT_IOC_B BIT_IOC_C BIT_IOC_N BIT_LOL_A BIT_LOL_B BIT_LOL_C BIT_I_DISTURBANCE BIT_V_DISTURBANCE
2	AlgorithmState	Present value of the High-Z output state machine: Normal = 0, Coordination Timeout = 1, Armed = 2, Arcing = 5, Downed Conductor = 9
3	EadZeroedFlag	Flag indicating the EAD table was cleared
4	SpectralFlag	Flag indicating the Spectral algorithm has found a match
5	ThreePhaseFlag	Flag indicating a three phase event was detected
6	PhaseInfo[4]	Phase specific information for the three phase currents and the neutral (see table below)

The algorithm is in “Normal” state when it detects no abnormal activity on the power system. While in the “Normal” state, any one of several power system events (a high output of the Expert Arc Detector, a significant loss of load, or a Hi-Z overcurrent) cause the algorithm to move to the “Coordination Timeout” state, where it remains for the time specified by the OC Protection Coord Timeout setting. Following this interval, the algorithm moves into its “Armed” state. The criteria for detecting arcing or a downed conductor are:

- The Expert Arc Detector Algorithm's output reaches a high level enough times, and
- Its high level was last reached when the algorithm's state was “Armed”

The “Arcing Sensitivity” setting determines what level constitutes a “high” output from the Expert Arc Detector Algorithm, and the number that constitutes what “enough times” means. If these criteria are met, the algorithm temporarily moves to either the “Arcing” state or the “Downed Conductor” state, the difference being determined by whether or not there was a significant, precipitous loss of load (as determined by the **LOSS OF LOAD THRESHOLD** setting) or a Hi-Z overcurrent (as determined by the **PHASE OC MIN PICKUP** and **NEUTRAL OC MIN PICKUP** settings). If either of these caused the algorithm to move from its “Normal” state to its “Coordination Timeout” state, then the algorithm moves to the “Downed Conductor” state temporarily. Otherwise, it temporarily moves to the “Arcing” state. After pulsing either of these outputs, the algorithm's state returns to “Normal”. Also, if two minutes pass without high levels from the Expert Arc Detector Algorithm while the algorithm is in its Armed state, then it moves from the “Armed” state directly back to the “Normal” state.

Two FlexLogic operands, HI-Z ARMED and HI-Z DISARMED, are created to represent the armed state of the Hi-Z element. The HI-Z ARMED operand is on when the algorithm is in the armed state, whereas the HI-Z DISARMED operand is on when the algorithm is not in the armed state. When the algorithm is armed, this also includes the arcing and downed conductor states. When the algorithm is disarmed, this also includes the normal and coordination timeout states (as defined by Modbus format F187 as described in the Modbus memory map in the UR Series Communications Guide).

The Hi-Z settings are as follows.

HI-Z SOURCE — Selects the source for the RMS currents and voltages used in Hi-Z algorithms. The source should include currents from the 8F/8G CT module and appropriate voltages. If the source does not include voltages, Voltage Supervision is disabled.

HI-Z ARCING SENSITIVITY — Establishes the belief-in-arcing confidence level at which the Hi-Z element recognizes arcing and the number of times the algorithm must conform its belief in arcing before it produces an output. The range is 1 to 10, where 10 is the most sensitive and 1 is the least sensitive setting.

A higher setting is suitable for a very quiet, well-behaved power system. An initial setting of 5 is suggested if the user has no previous experience with the Hi-Z element.

HI-Z ARCING DET SOE RESET TIME — An ARCING DETECTED event is created upon the detection of arcing by the expert arc detector algorithm. This setting defines the amount of time to hold creation of any new arcing detected events. Any subsequent arcing detection during this time restarts the hold timer. An ARCING DETECTED DPO event is generated upon the expiration of this reset time. The state of the expert arc detector algorithm is unaffected by this timer. The HI-Z ARC DETECTED DPO operand is set to "On" when the ARCING DETECTED DPO event is created, and remains on until an ARCING DETECTED event is created.

HI-Z PHASE EVENT COUNT — Specifies how many individual belief-in-arcing indications for a phase current must be counted in a specified time period before it is determined that an arcing-suspected event exists. These belief-in-arcing indications are detected by arc detection algorithms (energy and randomness) for a specific set of non-fundamental frequency component energies. This setting affects only the Hi-Z Arcing Suspected outputs.

HI-Z GROUND EVENT COUNT — Specifies how many individual belief-in-arcing indications for a ground/neutral current must be counted in a specified time period before it is determined that an arcing-suspected event exists. These belief-in-arcing indications are detected by arc detection algorithms (energy and randomness) for a specific set of non-fundamental frequency component energies. This setting affects only the Hi-Z Arcing Suspected outputs.

HI-Z EVENT COUNT TIME — Specifies the time (in minutes) over which the relay monitors long-term, sporadic, arcing events for determination of an arcing-suspected event. This setting affects only the Hi-Z Arcing Suspected outputs.

HI-Z OC PROTECTION COORD TIMEOUT — Coordinates between the Hi-Z element and conventional feeder overcurrent protection. A downed conductor or an arcing, intact conductor is not indicated before the expiration of this timeout, which begins when the Hi-Z element detects a trigger condition (such as loss of load, high rate of change, overcurrent, breaker open, or high belief-in-arcing confidence). Note that this is a minimum operating time; the actual operating time depends on the fault characteristics and is likely significantly longer than this setting.

Set the value such that the conventional feeder overcurrent protection is given an opportunity to operate before the timeout expires. It is recommended that this timeout value not exceed 30 seconds, because arcing fault current often diminishes as the fault progresses, making the fault more difficult to detect with increasing time. After the timeout has expired, at least one additional arc burst must occur in order for the Hi-Z element to proceed with its analysis.

HI-Z PHASE OC MIN PICKUP — Phase overcurrent minimum pickup indicates the level at which the Hi-Z element considers a phase current to be an overcurrent condition. The Hi-Z detection algorithms ignore all data as long as an overcurrent condition exists on the system, because it is assumed that conventional feeder overcurrent protection clears an overcurrent fault. It is recommended that this setting be above the maximum load current.

HI-Z NEUTRAL OC MIN PICKUP — Neutral overcurrent minimum pickup indicates the level at which the Hi-Z element considers a neutral current to be an overcurrent condition. The Hi-Z detection algorithms ignore all data as long as an overcurrent condition exists on the system, because it is assumed that conventional feeder overcurrent protection clears an overcurrent fault. It is recommended that this setting is above the maximum 3I0 (residual) current due to unbalanced loading.

HI-Z PHASE RATE OF CHANGE — Establishes a threshold for determining when a high rate-of-change event occurs on a phase RMS current. An extremely high rate of change is not characteristic of most high impedance faults; it is more indicative of a low impedance fault or of the inrush of breaker closing. The inrush current produces substantial variations in the harmonics used by the high impedance algorithms. Therefore these algorithms ignore all data for several seconds following a high rate-of-change event that exceeds this setting.

The RMS currents in the Hi-Z algorithms are calculated over a two-cycle time window. The rate-of-change is calculated as the difference between two consecutive two-cycle RMS readings. The recommended setting is 150 A per two-cycle interval. The setting is given in primary amperes.

HI-Z NEUTRAL RATE OF CHANGE — Establishes a threshold for determining when a high rate-of-change event occurs on a neutral RMS current. An extremely high rate of change is not characteristic of most high impedance faults; it is more indicative of a breaker closing, causing associated inrush. The inrush current produces substantial variations in the harmonics used by the high impedance algorithms. Therefore, these algorithms ignore all data for several seconds following a high rate-of-change event exceeding this setting.

The RMS currents in the Hi-Z algorithms are calculated over a two-cycle time window. The rate-of-change is calculated as the difference between two consecutive two-cycle RMS readings. The recommended setting is 150 A per two-cycle interval. The setting is given in primary amperes.

HI-Z LOSS OF LOAD THRESHOLD — Establishes the loss of load level used as an indication of a downed conductor. A Loss of Load flag is set if the Hi-Z algorithms detect a percentage drop in phase current between two successive two-cycle RMS values that equals or exceeds the Loss of Load Threshold. The amount the phase current must decrease between successive two-cycle RMS values is based on this setting times the recent average phase current level. The range is 5 to 100%; 5% being the most sensitive.

HI-Z 3-PHASE EVENT THRESHOLD — Establishes the level at which the Hi-Z element characterizes a sudden three-phase current increase as a three-phase event. The Hi-Z detection algorithms ignore the data generated by a large three-phase event. The recommended setting is 25 A (primary).

HI-Z VOLTAGE SUPV THRESHOLD — In the event that a fault simultaneously occurs on two adjacent feeders (line voltage from the same bus), the drop in line voltage causes a subsequent drop in load current. This function blocks the Loss of Load flag from being set while the voltage is depressed. Thus, if the voltage level drops by a percentage greater than this threshold in successive two-cycle RMS samples, the Loss of Load flag is blocked. If the setting is "0", the voltage supervision function is disabled.

HI-Z VOLTAGE SUPV DELAY — This setting adds time delay to the voltage supervision function. Specifically, the Loss of Load flag continues to be blocked for the number of cycles specified by this setting.

HI-Z EVEN HARMONIC RESTRAINT — This setting determines the level of the even harmonic at which the setting of the overcurrent flags is inhibited. The even harmonic content is evaluated on each phase current as a percentage of that phase's RMS current. The intent is to inhibit the setting of the overcurrent flags if the overcurrent is simply a surge caused by cold-load pickup or other inrush event.

IMPORTANT NOTE REGARDING INSTALLATION — The F60 Hi-Z algorithm is adaptive in nature. The algorithm's internal thresholds gradually adapt to background "noise" on circuits with a moderate to high level of transient activity. For the first three to five days after installation (or after being out-of-service for a significant period), the F60 can identify some of this noise as arcing. Take this into account when responding to alarms during these operating periods.

Figure 5-146: Hi-Z logic

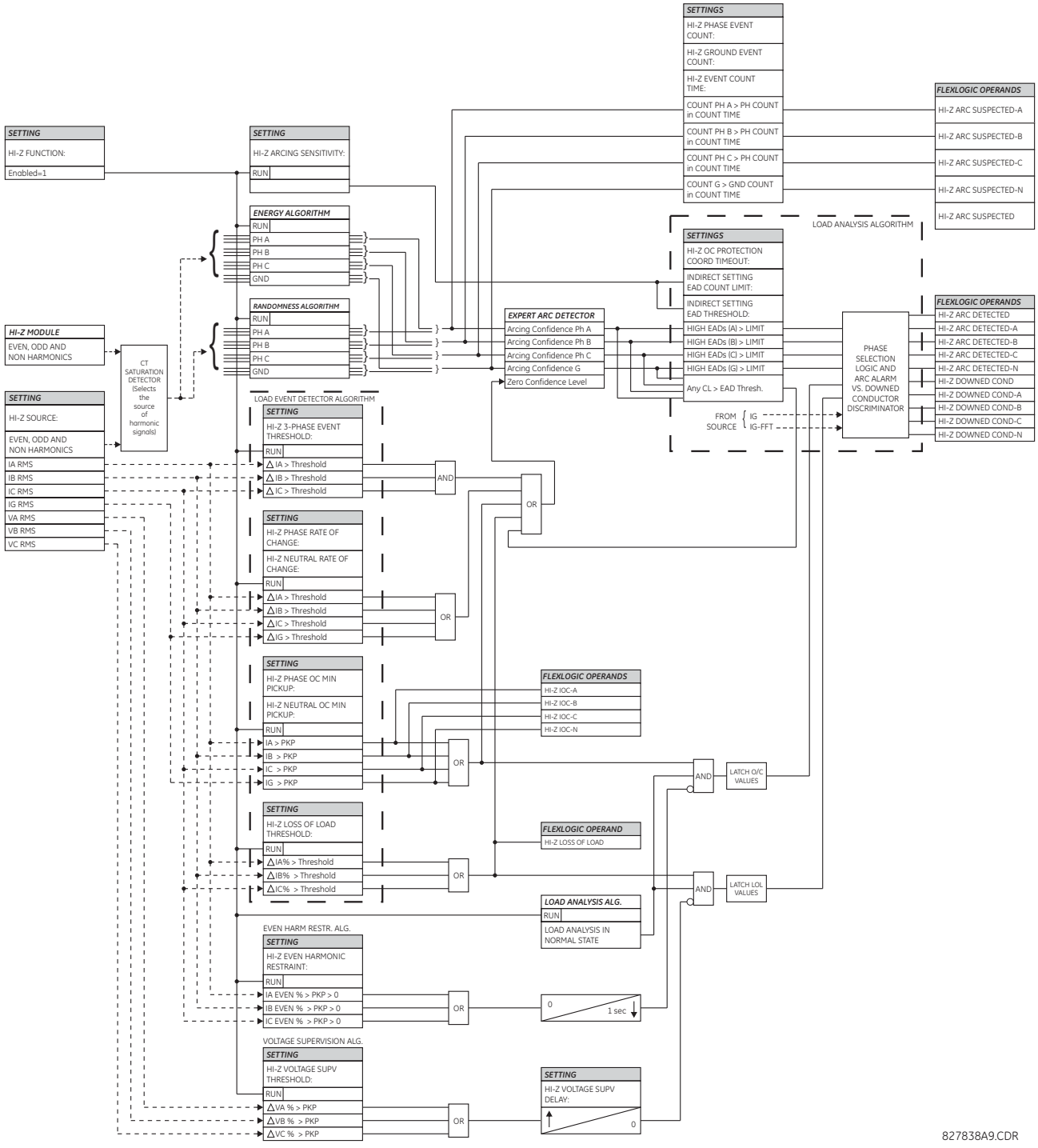

5.9.0.3 Breaker arcing current

SETTINGS ⇨⇩ CONTROL ELEMENTS ⇨⇩ MONITORING ELEMENTS ⇨ BREAKER 1(2) ARCING CURRENT

■ BREAKER 1 ■ ARCING CURRENT	⇔	BKR 1 ARC AMP FUNCTION: Disabled	Range: Disabled, Enabled

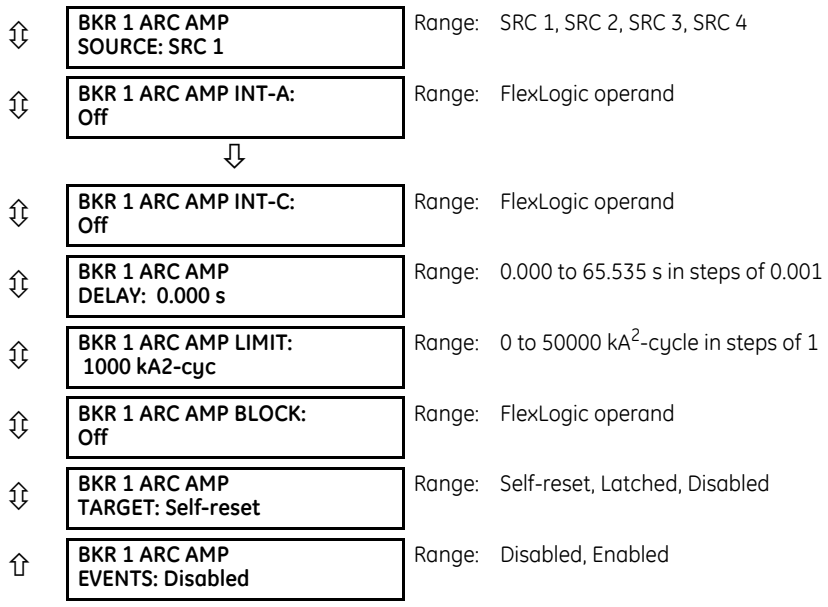

There is one breaker arcing current element available per CT bank, with a minimum of two elements. This element calculates an estimate of the per-phase wear on the breaker contacts by measuring and integrating the current squared passing through the breaker contacts as an arc. These per-phase values are added to accumulated totals for each phase and compared to a programmed threshold value. When the threshold is exceeded in any phase, the relay can set an output operand to "1." The accumulated value for each phase can be displayed as an actual value.

The operation of the scheme is shown in the following logic diagram. The same output operand that is selected to operate the output relay used to trip the breaker, indicating a tripping sequence has begun, is used to initiate this feature. A time delay is introduced between initiation and the starting of integration to prevent integration of current flow through the breaker before the contacts have parted. This interval includes the operating time of the output relay, any other auxiliary relays, and the breaker mechanism. For maximum measurement accuracy, measure the interval between change-of-state of the operand (from 0 to 1) and contact separation for the specific installation. Integration of the measured current continues for 100 ms, which is expected to include the total arcing period.

The feature is programmed to perform fault duration calculations. Fault duration is defined as a time between operation of the disturbance detector occurring before initiation of this feature, and reset of an internal low-set overcurrent function. Correction is implemented to account for a non-zero reset time of the overcurrent function.

Breaker arcing currents and fault duration values are available under the **ACTUAL VALUES ⇨⇩ RECORDS ⇨⇩ MAINTENANCE ⇨ BREAKER 1(2)** menus.

BKR 1 ARC AMP INT-A(C) — Select the same output operands that are configured to operate the output relays used to trip the breaker. In three-pole tripping applications, configure the same operand to initiate arcing current calculations for poles A, B, and C of the breaker. In single-pole tripping applications, configure per-pole tripping operands to initiate the calculations for the poles that are actually tripped.

BKR 1 ARC AMP DELAY — This setting is used to program the delay interval between the time the tripping sequence is initiated and the time the breaker contacts are expected to part, starting the integration of the measured current.

BKR 1 ARC AMP LIMIT — Selects the threshold value above which the output operand is set.

Figure 5-147: Arcing current measurement

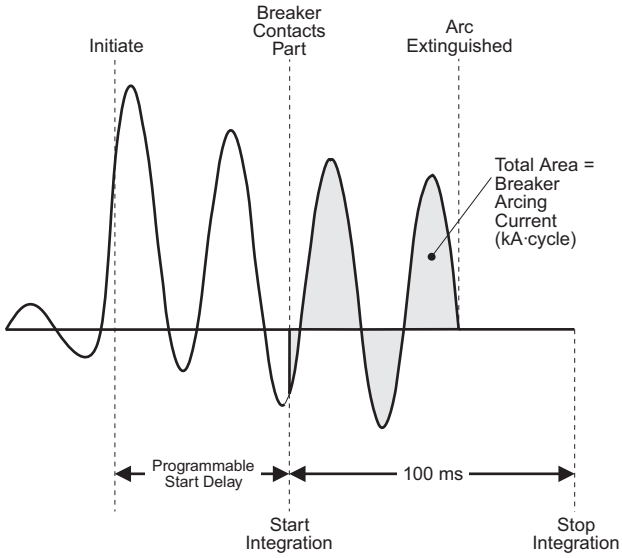

5

Figure 5-148: Breaker arcing current logic

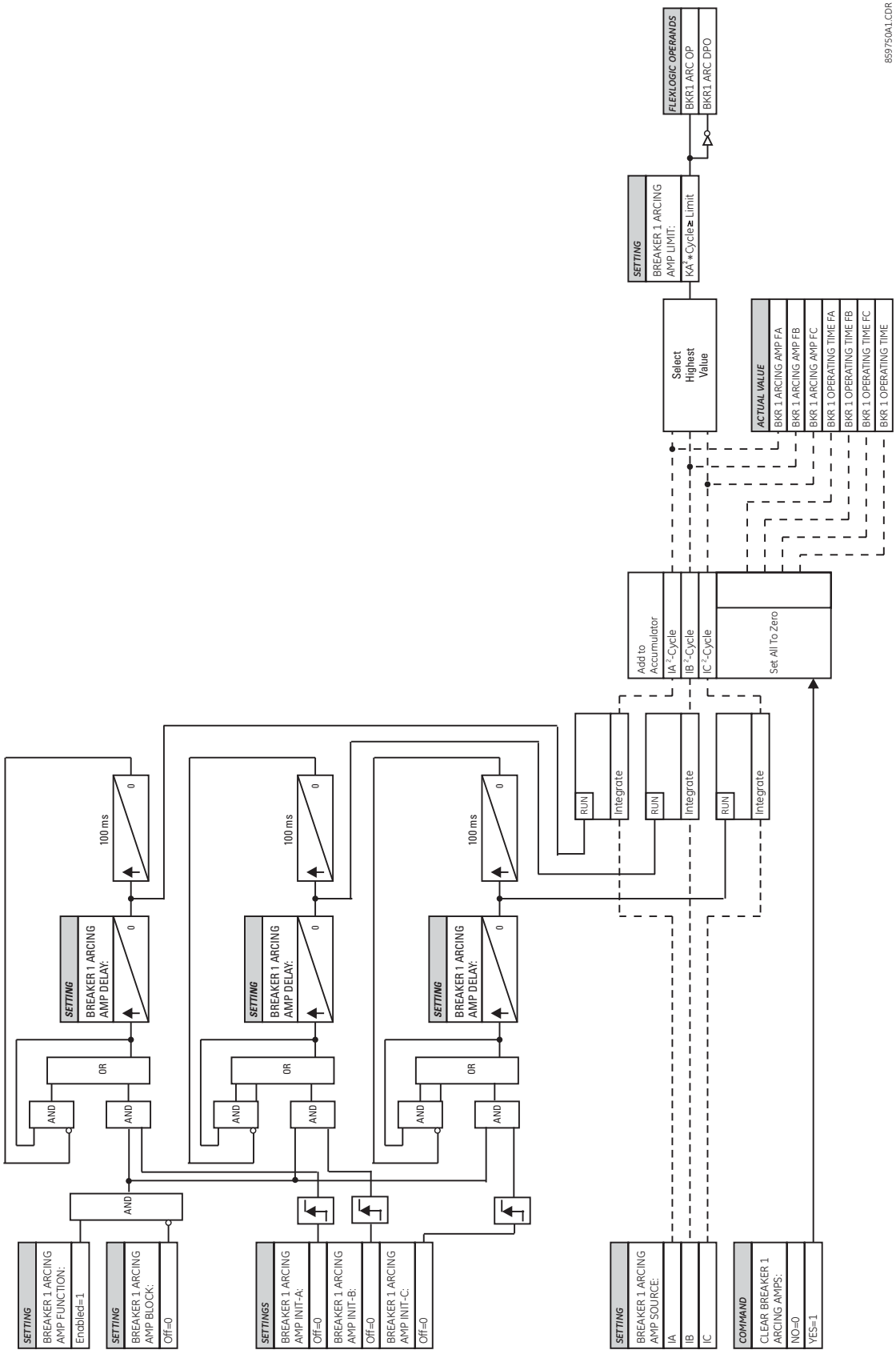

5.9.0.4 Breaker flashover

SETTINGS ⇨⇩ CONTROL ELEMENTS ⇨⇩ MONITORING ELEMENTS ⇨⇩ BREAKER FLASHOVER 1(2)

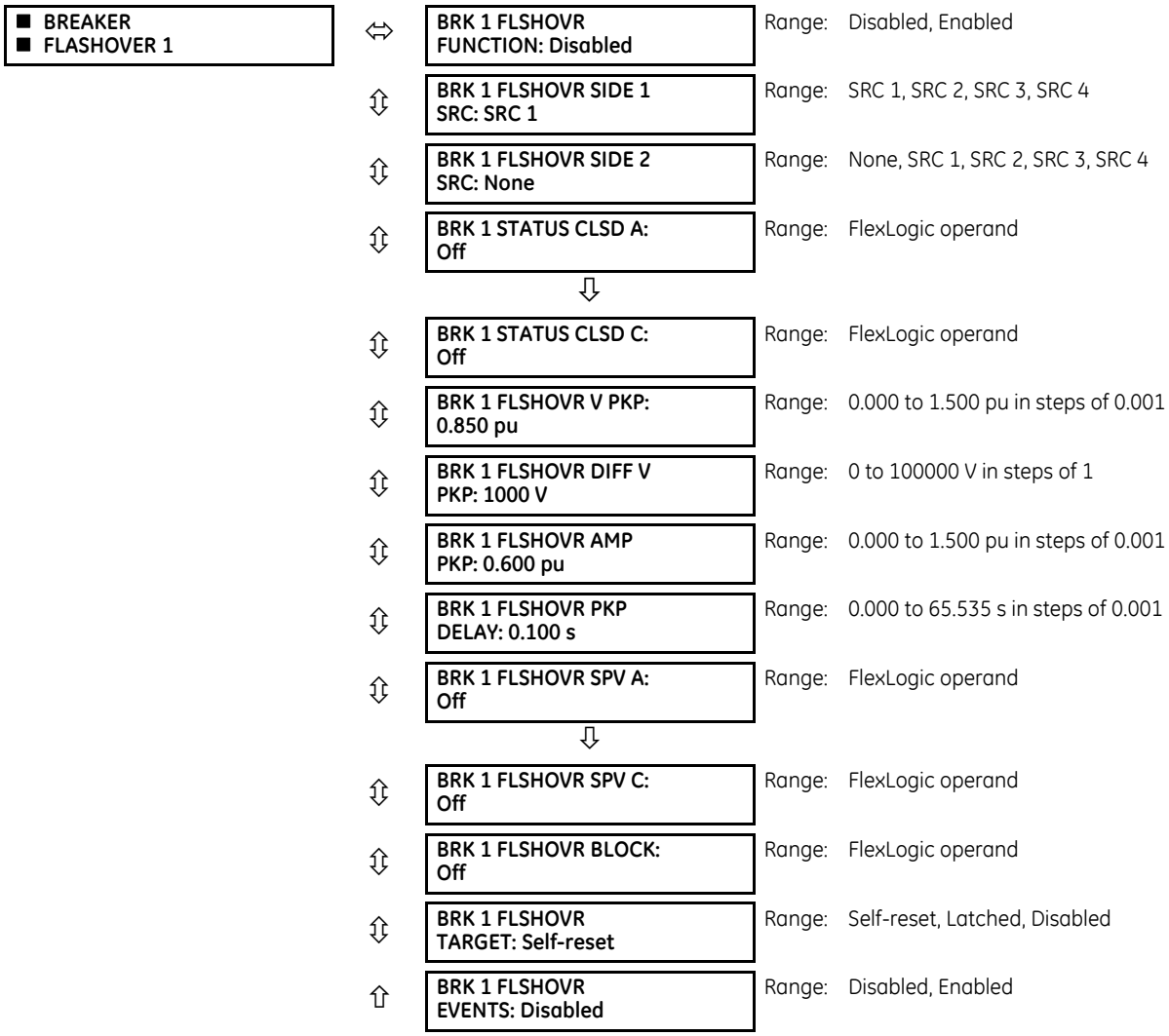

The detection of the breaker flashover is based on the following conditions:

- Breaker open,
- When phase voltage measured from either side of the breaker is greater than the setting,
- Measured current through the breaker is greater than the pickup setting, and
- Voltage difference across the breaker drops below the pickup setting (only applicable to six VTs application)

Furthermore, the scheme is applicable for cases where one or two sets of three-phase voltages are available across the breaker, as follows:

- One set of three-phase voltages is available across the breaker (three VTs application)
- Two sets of three-phase voltages are available across the breaker (six VTs application)

Three VT breaker flashover application

When only one set of VTs is available across the breaker, set the **BRK 1 FLSHOVR SIDE 2 SRC** setting to "None."

NOTE

Voltages must be present prior to flashover conditions. If the three VTs are placed after the breaker on the line (or feeder), and the downstream breaker is open, the measured voltage is zero and the flashover element is not initiated.

The flashover detection resets if the current drops below **BRK 1 FLSHOVR AMP PKP**, the breaker closes, or the FlexLogic operand selected by **BRK 1 FLSHOVR SPV A** changes to high. It is recommended to use the supervision **BRK 1 FLSHOVR SPV A** setting, and select a trip operand that does not allow the flashover element to pick up prior to the trip.

The flashover detection can be used for external alarm, re-tripping the breaker, or energizing the lockout relay.

Consider the following configuration:

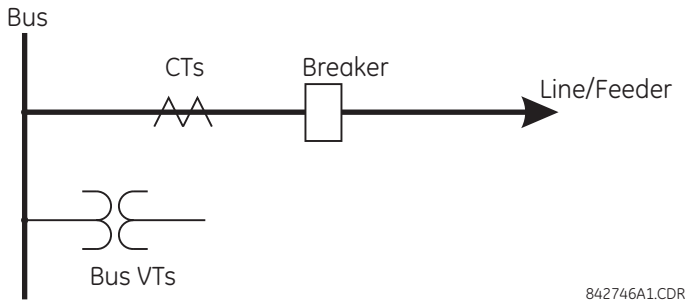

The source 1 (SRC1) phase currents are feeder CTs and phase voltages are bus VTs, and Contact Input 1 is set as Breaker 52a contact. The conditions prior to flashover detection are:

- 52a status = 0
- VAg is greater than the **BRK 1 FLSHOVR V PKP** setting
- IA is below **BRK 1 FLSHOVR AMP PKP** (ideally, IA = 0)

The conditions at flashover detection are:

- 52a status = 0
- VAg is greater or lesser than the **BRK 1 FLSHOVR V PKP** setting
- IA is greater than the **BRK 1 FLSHOVR AMP PKP** setting

Six VT breaker flashover application

In a six-VT application, the VTs located on both sides of a breaker are available. When the breaker is open, the voltage difference across the breaker is the rated voltage if the line is not energized from the remote end, or it can be two times the rated voltage at the time of synchronization if the line is energized from the remote. At the occurrence of breaker flashover, the voltage difference across breaker drops and current greater than **BRK 1 FLSHOVR AMP PKP** starts flowing through the breaker. These conditions are also true for a normal closed operation of a breaker where the voltage difference across breaker is practically zero and load current flows through the breaker. To distinguish between breaker flashover and normal closed operation of breaker, the Breaker Status is utilized.

In a six-VT configuration, if the voltages from VTs located on one of the sides of breaker disappear due to VT fuse failure or other reason, a three-VT configuration can provide the breaker flashover detection. If however, the blocking of breaker flashover detection is wanted under voltage loss on one side condition, then it can be done by applying the appropriate FlexLogic operand to the **BRK FLSHOVR BLOCK** setting.

Consider the following configuration:

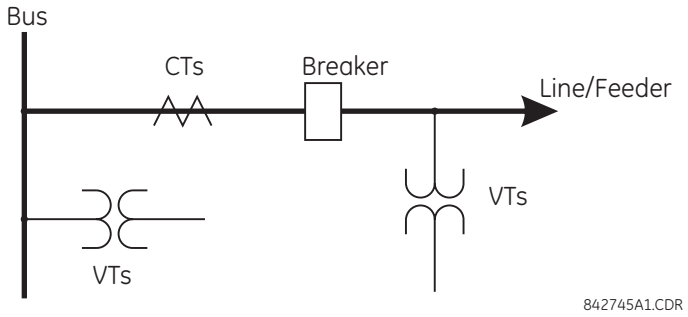

The source 1 (SRC1) phase currents are CTs and phase voltages are bus VTs. The source 2 (SRC2) phase voltages are line VTs. Contact input 1 is set as the breaker 52a contact (optional).

The conditions prior to flashover detection are:

- 52a status = 0
- VAg or Vag greater than the **BRK 1 FLSHOVR V PKP** setting
- IA is below **BRK 1 FLSHOVR AMP PKP** (ideally, IA = 0)
- ΔVA is greater than the **BRK 1 FLSHOVR DIFF V PKP** setting

The conditions at flashover detection are:

- 52a status = 0
- VAg or Vag greater or lesser than the **BRK 1 FLSHOVR V PKP** setting
- IA is greater than the **BRK 1 FLSHOVR AMP PKP** setting
- ΔVA is less than the **BRK 1 FLSHOVR DIFF V PKP** setting

NOTE

The element operates only when phase-to-ground voltages are connected to relay terminals. The flashover element does not operate if delta voltages are applied.

Settings

BRK 1 FLSHOVR SIDE 1 SRC — This setting specifies a signal source used to provide three-phase voltages and three-phase currents from one side of the current breaker. The source selected as a setting and must be configured with breaker phase voltages and currents, even if only three VTs are available across the breaker.

BRK 1 FLSHOVR SIDE 2 SRC — This setting specifies a signal source used to provide another set of three phase voltages whenever six VTs are available across the breaker. For a three-VT application, set this setting to "None."

BRK 1 STATUS CLSD A to **BRK 1 STATUS CLSD C** — These settings specify FlexLogic operands to indicate the closed status of the breaker. A separate FlexLogic operand can be selected to detect individual breaker pole status and provide flashover detection. The recommended setting is 52a breaker contact or another operand defining the breaker poles closed status.

NOTE

Leaving this setting off, meaning not configuring any FlexLogic to indicated Closed Breaker leads to maloperation of the element.

BRK 1 FLSHOVR V PKP — This setting specifies a pickup level for the phase voltages from one or both sides of the breaker. If six VTs are available, opening the breaker leads to two possible combinations – live voltages from only one side of the breaker, or live voltages from both sides of the breaker. The detection of voltage above the selected value on either side of the breaker sets the scheme ready for flashover detection. Set **BRK FLSHOVR V PKP** to 85 to 90% of the nominal voltage.

BRK 1 FLSHOVR DIFF V PKP — This setting specifies a pickup level for the phase voltage difference when two VTs per phase are available across the breaker. Set this setting to be lower than the monitored voltage difference that is observed when closed or opened breaker resistors are left in service. The setting is selected as primary volts difference between the sources.

BRK 1 FLSHOVR AMP PKP — This setting specifies the normal load current which can flow through the breaker. Depending on the flashover protection application, the flashover current can vary from levels of the charging current when the line is not loaded to well above the maximum line (feeder) load (line/feeder connected to load).

BRK 1 FLSHOVR SPV A to **BRK 1 FLSHOVR SPV C** — These settings specify FlexLogic operands (per breaker pole) that supervise the operation of the element per phase. Supervision can be provided by operation of other protection elements, breaker failure, and close and trip commands. A six-cycle time delay applies after the selected FlexLogic operand resets.

BRK FLSHOVR PKP DELAY — This setting specifies the time delay to operate after a pickup condition is detected. Do not set it too long else the flashover current can disappear before its detection.

Figure 5-149: Breaker flashover logic

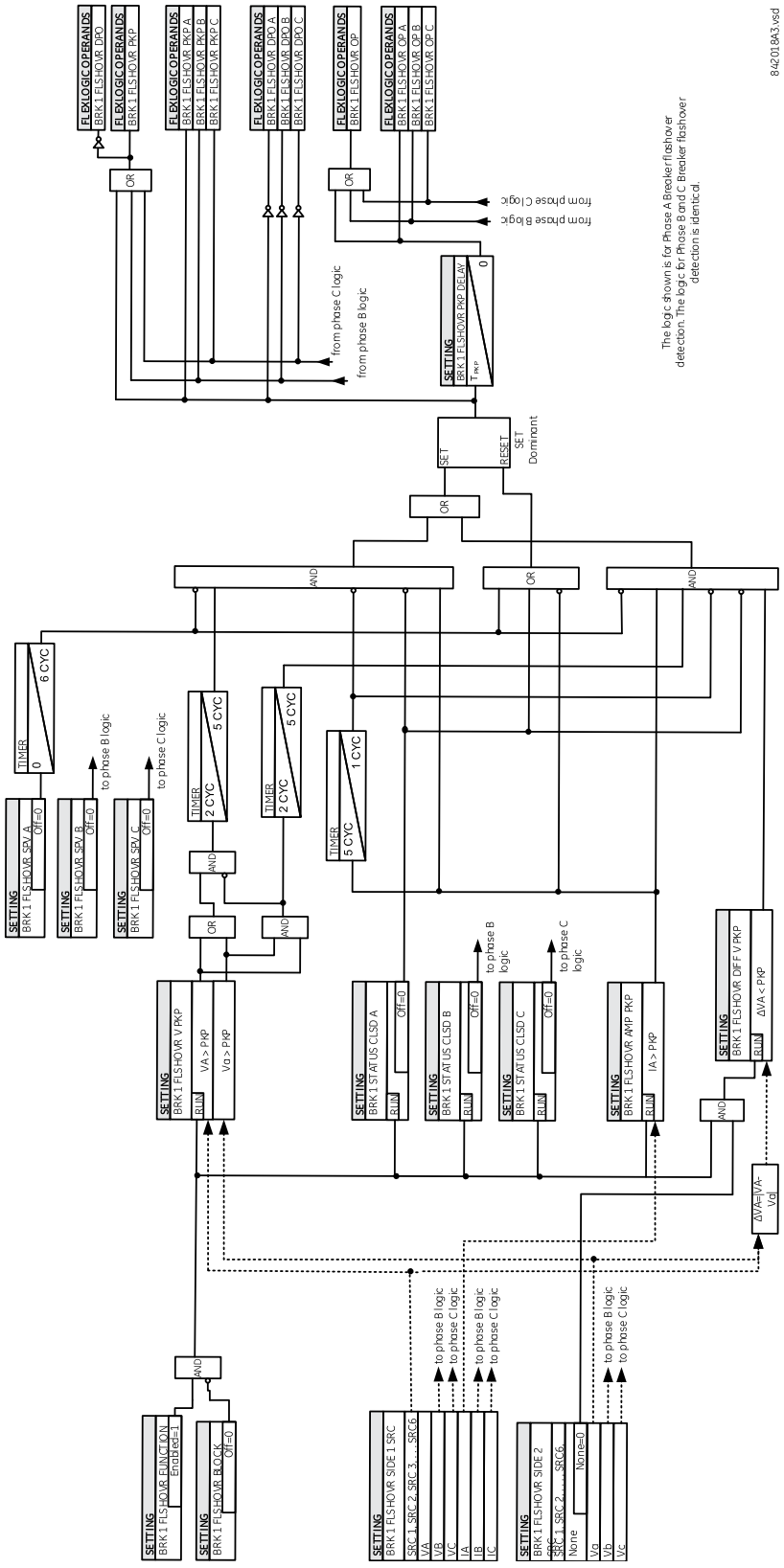

5.9.0.5 Breaker restrike

SETTINGS ⇨⇩ CONTROL ELEMENTS ⇨⇩ MONITORING ELEMENTS ⇨⇩ BREAKER RESTRIKE 1

■ BREAKER RESTRIKE 1 ■	⇔	**BREAKER RESTRIKE 1 FUNCTION: Disabled**	Range: Disabled, Enabled
	⇩	**BRK RESTRIKE 1 BLOCK: Off**	Range: FlexLogic operand
	⇩	**BREAKER RESTRIKE 1 SOURCE: SRC 1**	Range: SRC 1, SRC 2, SRC 3, SRC 4
	⇩	**BREAKER RESTRIKE 1 PICKUP: 0.50 pu**	Range: 0.10 to 2.00 pu in steps of 0.01
	⇩	**BREAKER RESTRIKE 1 RST DELAY: 0.100 s**	Range: 0.000 to 65.535 s in steps of 0.001
	⇩	**BREAKER RESTRIKE 1 HF DETECT: Enabled**	Range: Disabled, Enabled
	⇩	**BRK RSTR 1 BRK OPEN: Off**	Range: FlexLogic operand
	⇩	**BRK RSTR 1 OPEN CMD: Off**	Range: FlexLogic operand
	⇩	**BRK RSTR 1 CLS CMD: Off**	Range: FlexLogic operand
	⇩	**BREAKER RESTRIKE 1 TARGET: Self-reset**	Range: Self-reset, Latched, Disabled
	⇩	**BREAKER RESTRIKE 1 EVENTS: Disabled**	Range: Disabled, Enabled

One breaker restrike element is provided in the F60.

According to IEEE standard C37.100 entitled IEEE Standard Definitions for Power Switchgear, restrike is defined as "a resumption of current between the contacts of a switching device during an opening operation after an interval of zero current of ¼ cycle at normal frequency or longer."

Figure 5-150: Typical restrike waveform and detection flag

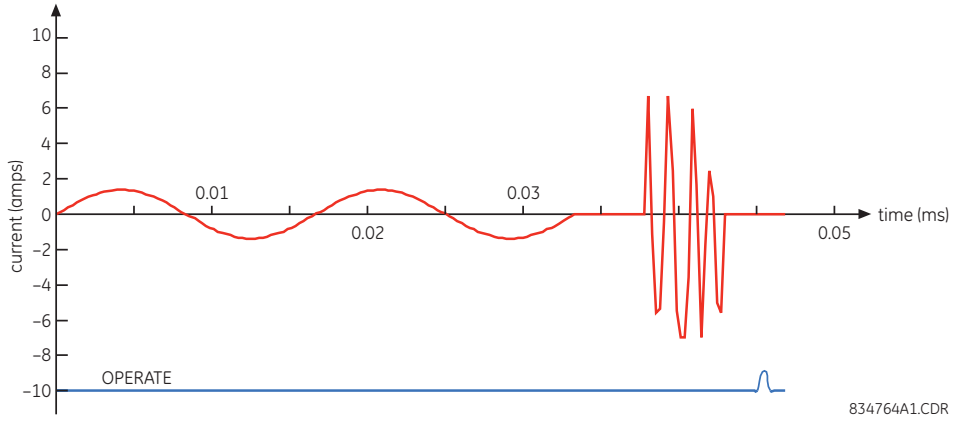

The breaker restrike algorithm responds to a successful interruption of the phase current following a declaration of capacitor bank offline as per the breaker pole indication. If a high-frequency or system frequency current with a magnitude greater than the threshold is resumed at least ¼ of a cycle later than the phase current interruption, then a breaker restrike condition is declared in the corresponding phase and the BRK RESTRIKE 1 OP operand asserts for a short period of time. The user can add counters and other logic to facilitate the decision making process as to the appropriate actions upon detecting a single restrike or a series of consecutive restrikes.

A restrike event (FlexLogic operand) is declared if all of the following hold:

- The current is initially interrupted
- The breaker status is open
- An elevated high frequency current condition occurs (if the **BREAKER RESTRIKE 1 HF DETECT** setting is Enabled, otherwise the condition is bypassed), and
- The current subsequently drops out again

The algorithm is illustrated in the following state machine diagram.

Figure 5-151: Algorithm illustration of state machine to detect restrike

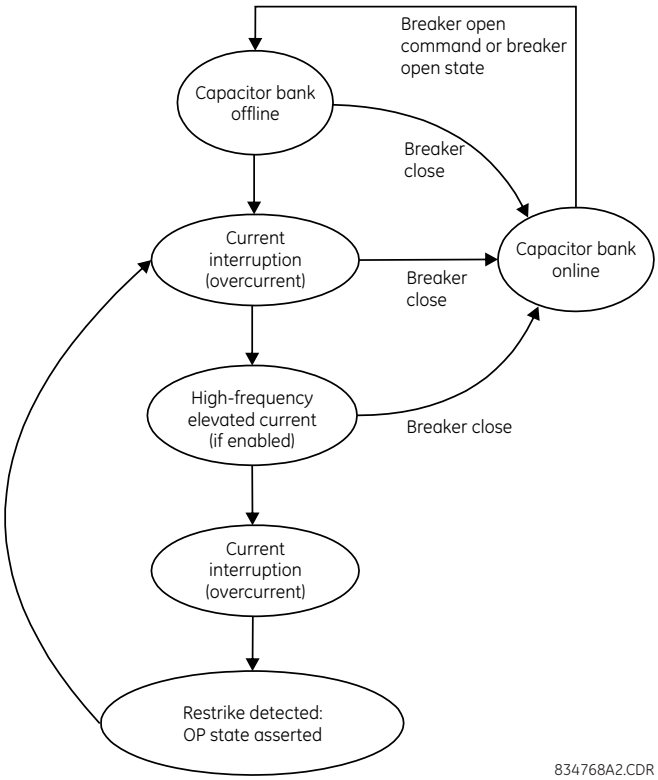

In this way, a distinction is made between a self-extinguishing restrike and permanent breaker failure condition. The latter can be detected by the breaker failure function or a regular instantaneous overcurrent element. Also, a fast succession of restrikes is picked up by breaker failure or instantaneous overcurrent protection.

The following settings are available for each element.

BREAKER RESTRIKE 1 FUNCTION — Enables and disables operation of the breaker restrike detection element.

BRK RESTRIKE 1 BLOCK — Blocks operation of the breaker restrike detection element.

BREAKER RESTRIKE 1 SOURCE — Selects the source of the current for this element. This source must have a valid CT bank assigned.

BREAKER RESTRIKE 1 PICKUP — Specifies the pickup level of the overcurrent detector in per-unit values of CT nominal current.

BREAKER RESTRIKE 1 RST DELAY — Specifies the reset delay for this element. When set to "0 ms," then FlexLogic operand is picked up for only 1/8th of the power cycle.

BREAKER RESTRIKE 1 HF DETECT — Enables/disables high-frequency (HF) pattern detection when breaker restrike occurs. High-frequency pattern is typical for capacitor bank, cables, and long transmission line applications.

BRK RSTR 1 BRK OPEN — Assigns a FlexLogic operand indicating the open position of the breaker. It must be logic "1" when the breaker is open. It is important to assign either 52 contact with this setting or breaker close command with **BRK RSTR 1 CLS CMD** setting to give clear indication to the relay about breaker status.

BRK RSTR 1 OPEN CMD — Assigns a FlexLogic operand indicating a breaker open command. It must be logic "1" when the breaker is opened, either manually or from protection logic.

BRK RSTR 1 CLS CMD — Assigns a FlexLogic operand indicating a breaker close command. It must be logic "1" when the breaker is closed.

Figure 5-152: Breaker restrike logic

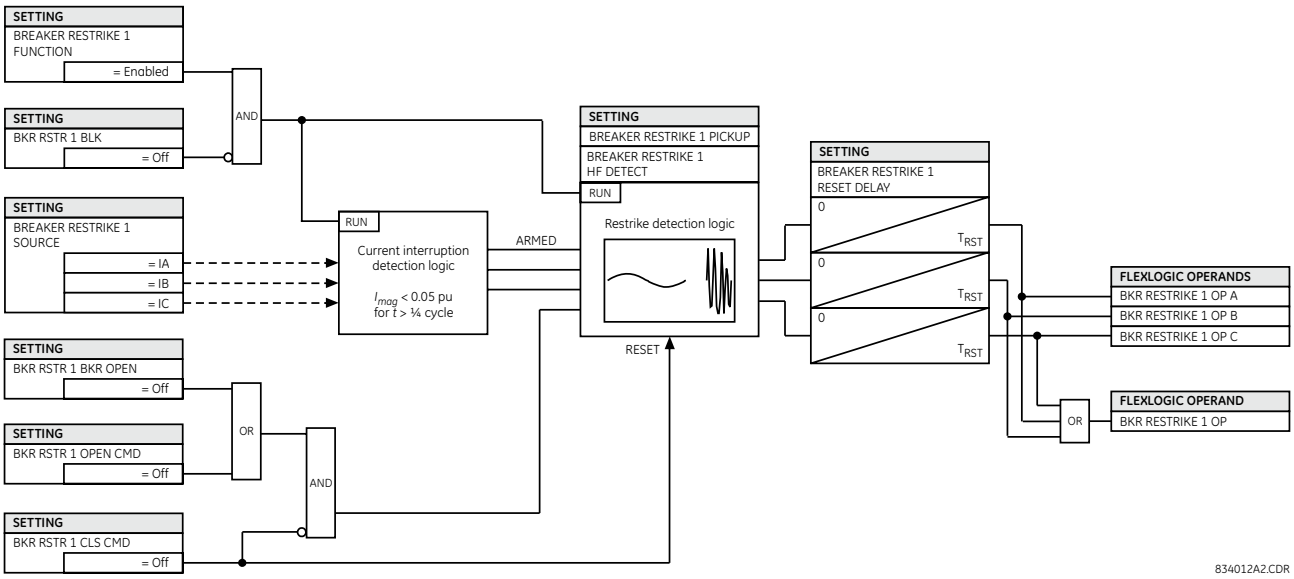

5.9.0.6 Incipient fault detector

SETTINGS ⇨⇩ CONTROL ELEMENTS ⇨⇩ MONITORING ELEMENTS ⇨⇩ INCIPIENT FAULT 1(2)

■ INCIPIENT FAULT 1 ■	⇔	**INCIPIENT FAULT 1 FUNCTION: Disabled**	Range: Disabled, Enabled
	⇕	**INCIPNT FLT 1 BLOCK: Off**	Range: FlexLogic operand
	⇕	**INCIPIENT FAULT 1 SOURCE: SRC 1**	Range: SRC 1, SRC 2, SRC 3, SRC 4
	⇕	**INCIPIENT FAULT 1 PICKUP: 0.50 pu**	Range: 0.10 to 10.00 pu in steps of 0.01
	⇕	**INCIPNT FLT 1 MODE: Number of counts**	Range: Number of counts, Counts per window
	⇕	**INCIPIENT FLT 1 TRIP COUNTS NUMBER: 2**	Range: 1 to 10 in steps of 1
	⇕	**INCIPNT FLT 1 DETECT WINDOW: 10.00 s**	Range: 0.00 to 1000.00 s in steps of 0.01
	⇕	**INCIPIENT FAULT 1 RESET DELAY: 0.100 s**	Range: 0.000 to 65.535 s in steps of 0.001
	⇕	**INCIPIENT FAULT 1 TARGET: Self-reset**	Range: Self-reset, Latched, Disabled
	⇧	**INCIPIENT FAULT 1 EVENTS: Disabled**	Range: Disabled, Enabled

There are two incipient cable fault detection elements in the relay.

Before a permanent cable fault occurs, there are usually signs of degrading insulation manifesting itself as a short, mostly half-cycle spikes asserting at the phase voltage peak. Due to shortness of such spikes, they are not usually detected by the instantaneous protection of the feeder, which operates on the RMS or fundamental component of the phase current with a relatively high pickup.

The number of detected incipient faults in each phase is counted and available in the **ACTUAL VALUES ⇨ STATUS ⇨⇩ INCIPIENT FAULT** menus. The counters can be reset with the **COMMANDS ⇨⇩ CLEAR RECORDS ⇨⇩ CLEAR INCIPENT FAULT COUNTERS** command.

NOTE

Changes to any of the incipient cable fault detector settings resets of the number of the incipient faults detected to zero.

To provide a clear timing indication when the incipient fault occurred, the incipient fault event is time-stamped with the time the fault actually occurred. However, the FlexLogic operand is asserted four cycles later, when the incipient fault pattern is confirmed and therefore detected.

The figure illustrates a recorded field case of an incipient phase B fault. The top portion of the figure shows the raw A, B, and C currents. The bottom portion shows the neutral current (blue) and reveals the fault period from under the load and the superimposed phase B current (red). The superimposed current shows two fault current blips as the data slides through the two-cycle memory window. During the actual fault, the neutral current and the superimposed phase B currents closely correspond, confirming the incipient fault hypothesis and identifying the affected phase.

Figure 5-153: Illustration of the incipient fault detector algorithm

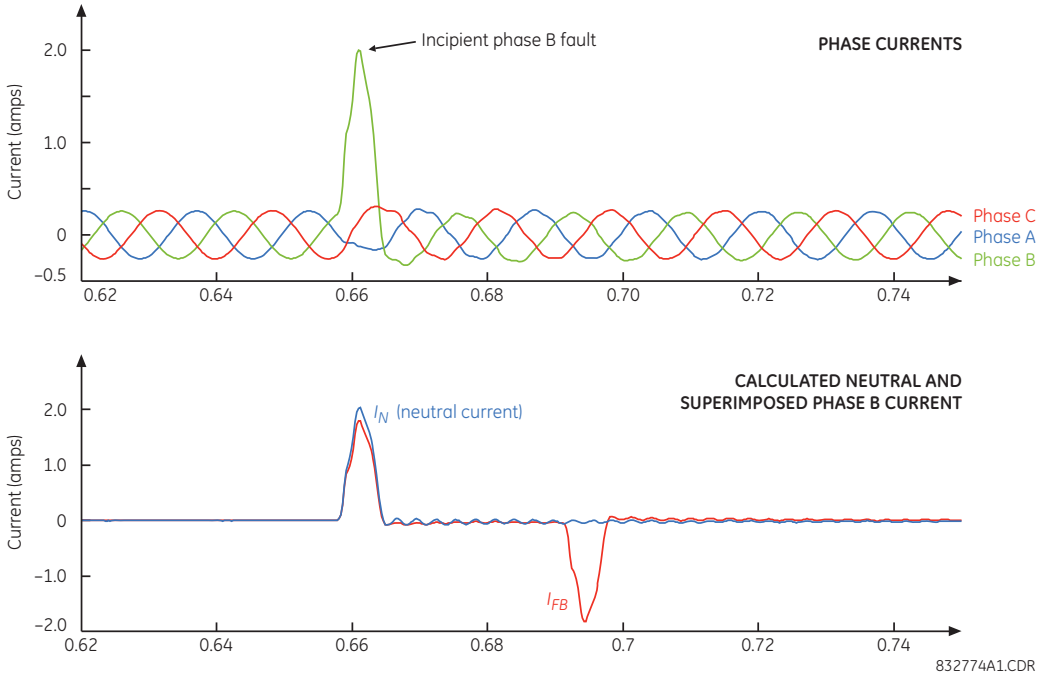

The following settings are available for each incipient cable fault detector.

INCIPIENT FAULT 1 FUNCTION — This setting enables and disables operation of the incipient fault detection element.

INCIPNT FLT 1 BLOCK — Blocks operation of the incipient cable fault detector element. Assertion of the FlexLogic operand assigned to this setting blocks operation.

INCIPIENT FAULT 1 SOURCE — Selects a current source for the incipient cable fault detector element. This source must be assigned a valid CT bank.

INCIPIENT FAULT 1 PICKUP — Specifies the pickup level of the overcurrent detector in per-unit values of the CT nominal current.

INCIPNT FLT 1 MODE — There are two modes of operation available for the incipient cable fault detector element. In the "Number of counts" mode, a trip is initiated only after the selected number of faults is detected. In the "Counts per window" mode, a trip is initiated only after the selected number of faults is detected within the time specified by the **INCIPNT FLT 1 DETECT WINDOW** setting.

INCIPIENT FLT 1 TRIP COUNTS NUMBER — Selects the number of faults required to initiate a trip.

INCIPNT FLT 1 DETECT WINDOW — Specifies a time window for "Counts per window" mode of operation.

INCIPIENT FAULT 1 RESET DELAY — Specifies a reset time for the output after the trip is initiated.

Figure 5-154: Incipient cable fault detector logic

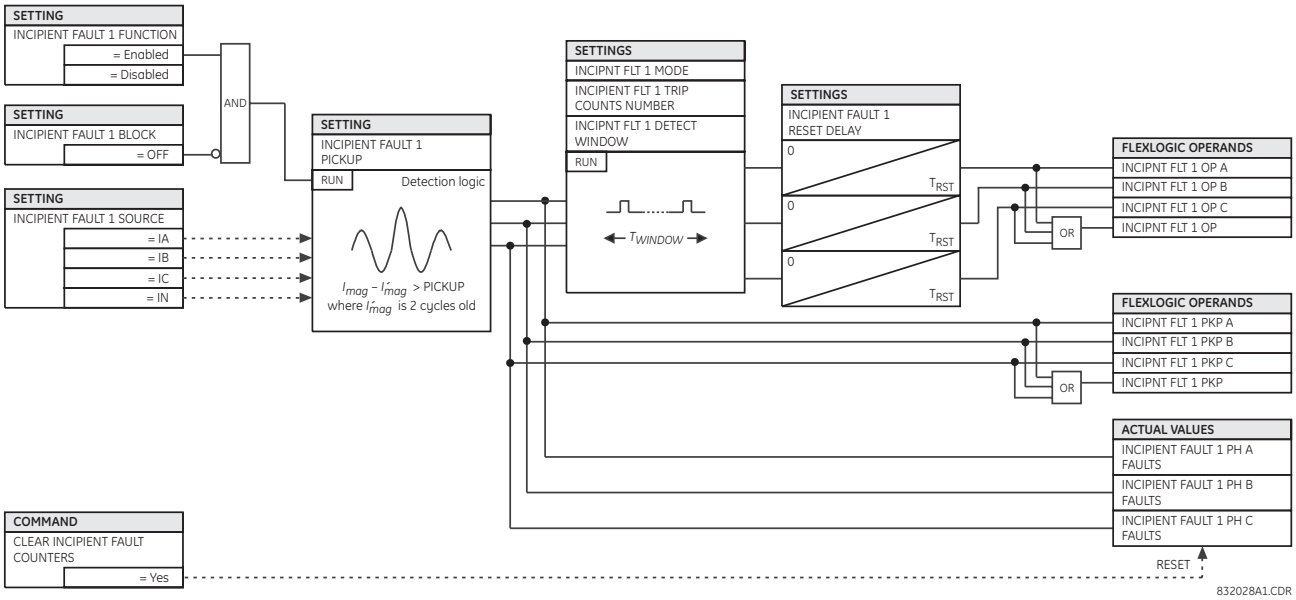

5.9.0.7 VT fuse failure

SETTINGS ⇨⇩ CONTROL ELEMENTS ⇨⇩ MONITORING ELEMENTS ⇨⇩ VT FUSE FAILURE 1(4)

■ VT FUSE FAILURE 1 ■	⇔	VT FUSE FAILURE 1 FUNCTION: Disabled	Range: Disabled, Enabled
	⇩	VT FUSE FAILURE 1 ALARM DELAY: 1.000 s	Range: 0.000 to 65.535 s in steps of 0.001
	⇩	NEUTRAL WIRE OPEN 1 DETECTION: Disabled	Range: Disabled, Enabled
	⇩	NEUTRAL WIRE OPEN 1 3 HARM PKP: 0.100 pu	Range: 0.000 to 3.000 pu in steps of 0.001

Every signal source includes a fuse failure scheme. A signal source must have a three-phase VT bank and a three-phase CT bank assigned to it, in order for the fuse failure scheme to operate.

The VT fuse failure detector is used to raise an alarm and/or block elements that operate incorrectly for a full or partial loss of AC potential caused by one or more blown fuses. Some elements that can be blocked (via the BLOCK input) are distance, voltage restrained overcurrent, and directional current.

There are two classes of fuse failure that occur:

- Class A — Loss of one or two phases
- Class B — Loss of all three phases

Different means of detection are required for each class. An indication of class A failures is a significant level of negative-sequence voltage, whereas an indication of class B failures is when positive sequence current is present and there is an insignificant amount of positive sequence voltage. Also, a rapid decrease in the phase voltages magnitude from a healthy

voltage level without disturbance in current can indicate VT fuse fail conditions. These noted indications of fuse failure can also be present when faults are present on the system, so a means of detecting faults and inhibiting fuse failure declarations during these events is provided.

Once the fuse failure condition is declared, it is sealed-in until the cause that generated it disappears.

An additional condition is introduced to inhibit a fuse failure declaration when the monitored circuit is de-energized; positive-sequence voltage and current are both below threshold levels.

VT FUSE FAILURE 1 FUNCTION — Enables and disables the fuse failure feature for Source 1 VT Fuse Fail.

NEUTRAL WIRE OPEN 1 DETECTION — Enables and disables the VT neutral wire open detection function. When the VT is connected in Delta, do not enable this function because there is no neutral wire for Delta connected VT.

NEUTRAL WIRE OPEN 1 3 HRAM PKP — Specifies the pickup level of 3rd harmonic of 3V0 signal for the **NEUTRAL WIRE OPEN DETECTION** logic to pick up.

Base voltage for this element is **PHASE VT SECONDARY** setting in the case of WYE VTs and (**PHASE VT SECONDARY**)/ $\sqrt{3}$ in case of DELTA VTs. The setting is found under **SETTINGS ⇨⇩ SYSTEM SETUP ⇨ AC INPUTS ⇨⇩ VOLTAGE BANK ⇨ PHASE VT SECONDARY**.

Figure 5-155: VT fuse fail logic

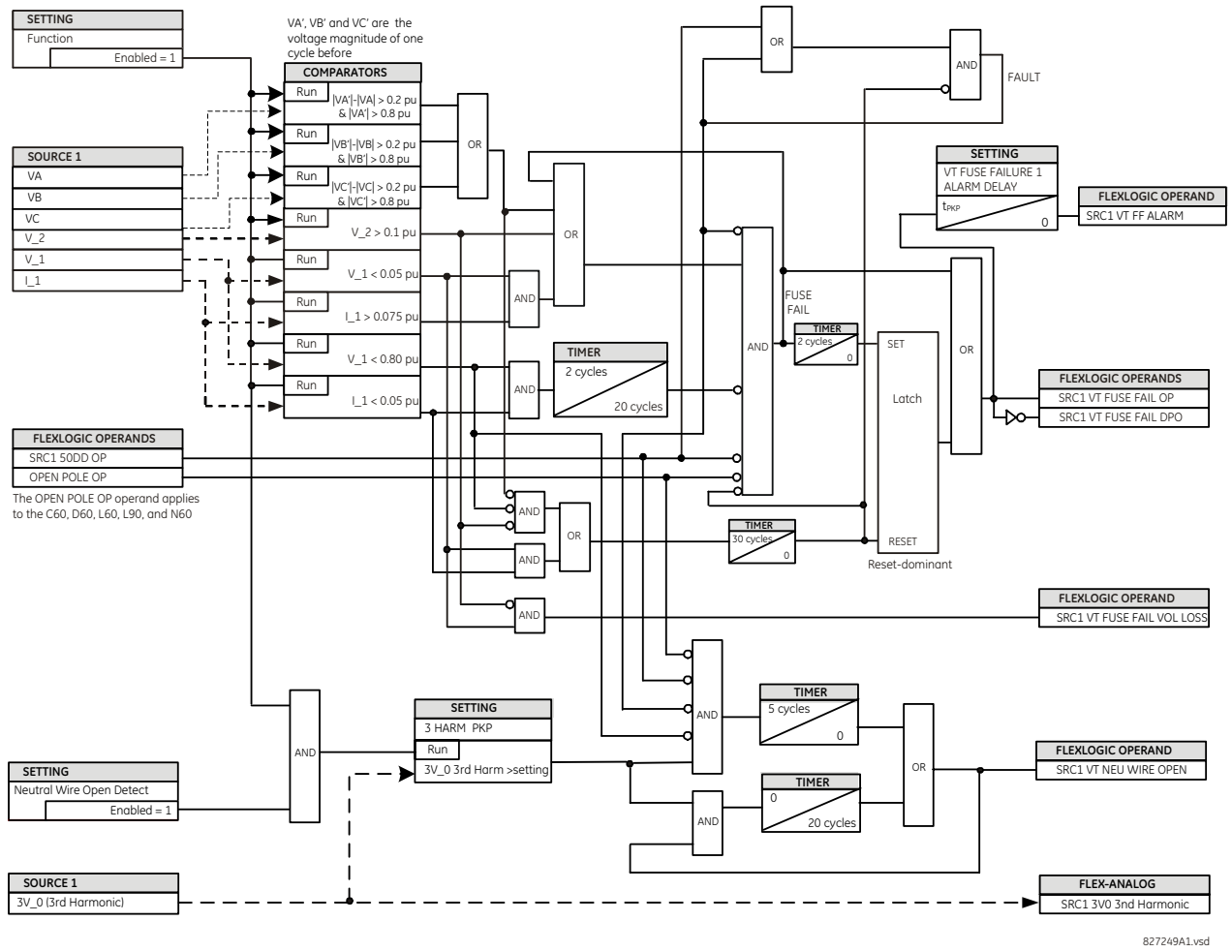

5.9.0.8 Broken conductor detection

SETTINGS ⇨⇩ CONTROL ELEMENTS ⇨⇩ MONITORING ELEMENTS ⇨⇩ BROKEN CONDUCTOR 1(4)

■ BROKEN CONDUCTOR 1 ■	⇔	**BROKEN CONDUCTOR 1 FUNCTION: Disabled**	Range: Disabled, Enabled
	⇩	**BROKEN CONDUCTOR 1 SOURCE: SRC 1**	Range: SRC 1, SRC 2, SRC 3, SRC 4
	⇩	**BROKEN CONDUCTOR 1 I2/I1 RATIO: 20%**	Range: 20.0% to 100.0% in steps of 0.1%
	⇩	**BROKEN CONDUCTOR 1 I1 MIN: 0.10 pu**	Range: 0.05 to 1.00 pu in steps of 0.01
	⇩	**BROKEN CONDUCTOR 1 I1 MAX: 1.50 pu**	Range: 0.05 to 5.00 pu in steps of 0.01
	⇩	**BROKEN CONDUCTOR 1 PKP DELAY: 20.000 s**	Range: 0.000 to 65.535 s in steps of 0.001
	⇩	**BROKEN CONDCT 1 BLK: Off**	Range: FlexLogic operand
	⇩	**BROKEN CONDUCT 1 TARGET: Self-reset**	Range: Self-reset, Latched, Disabled
	⇩	**BROKEN CONDUCT 1 EVENTS: Disabled**	Range: Disabled, Enabled

5

The broken conductor function detects a transmission line broken conductor condition or a single-pole breaker malfunction condition by checking the phase current input signals and the I_2 / I_1 ratio. The intent is to detect a single-phase broken conductor only. As such, two-phase or three-phase broken conductors cannot be detected.

To distinguish between single-phase disappearance and system disturbance in all three phases (such as load change and switching), the broken conductor element monitors the change in all three phase currents at the present instance and at four cycles previous. It also monitors changes in the I_2 / I_1 ratio, I_1 minimum, and I_1 maximum.

Do not use the broken conductor function to respond to fault transients and single-pole tripping/reclosing conditions. Therefore, program the time delay to a sufficient length to ensure coordination with the breaker dead time of the recloser function.

BROKEN CONDUCTOR 1 FUNCTION — This setting enables and disables the broken conductor function.

BROKEN CONDUCTOR 1 SOURCE — Selects a signal source used to provide three-phase current inputs to this function.

BROKEN CONDUCTOR 1 I2/I1 RATIO — This setting specifies the ratio of negative-sequence current to positive-sequence current. When one phase conductor is broken, the I_2 / I_1 ratio with a balanced remaining two phases is 50%. So normally you this setting below 50% (for example, to 30%).

BROKEN CONDUCTOR 1 I1 MIN — This setting specifies the minimum positive-sequence current supervision level. Ensure this setting is programmed to a sufficient level to prevent I_2 / I_1 from erratic pickup due to a low I_1 signal. However, do not set this setting too high, since the broken conductor condition cannot be detected under light load conditions when I_1 is less than the value specified by this setting.

BROKEN CONDUCTOR 1 I1 MAX — This setting specifies the maximum I_1 level allowed for the broken conductor function to operate. When I_1 exceeds this setting, this it is considered a fault. In order for this function to not respond to any fault conditions, set this setting to less than the maximum load current.

BROKEN CONDUCTOR 1 PKP DELAY — This setting specifies the pickup time delay for this function to operate after assertion of the broken conductor pickup FlexLogic operand.

Figure 5-156: Broken conductor detection logic

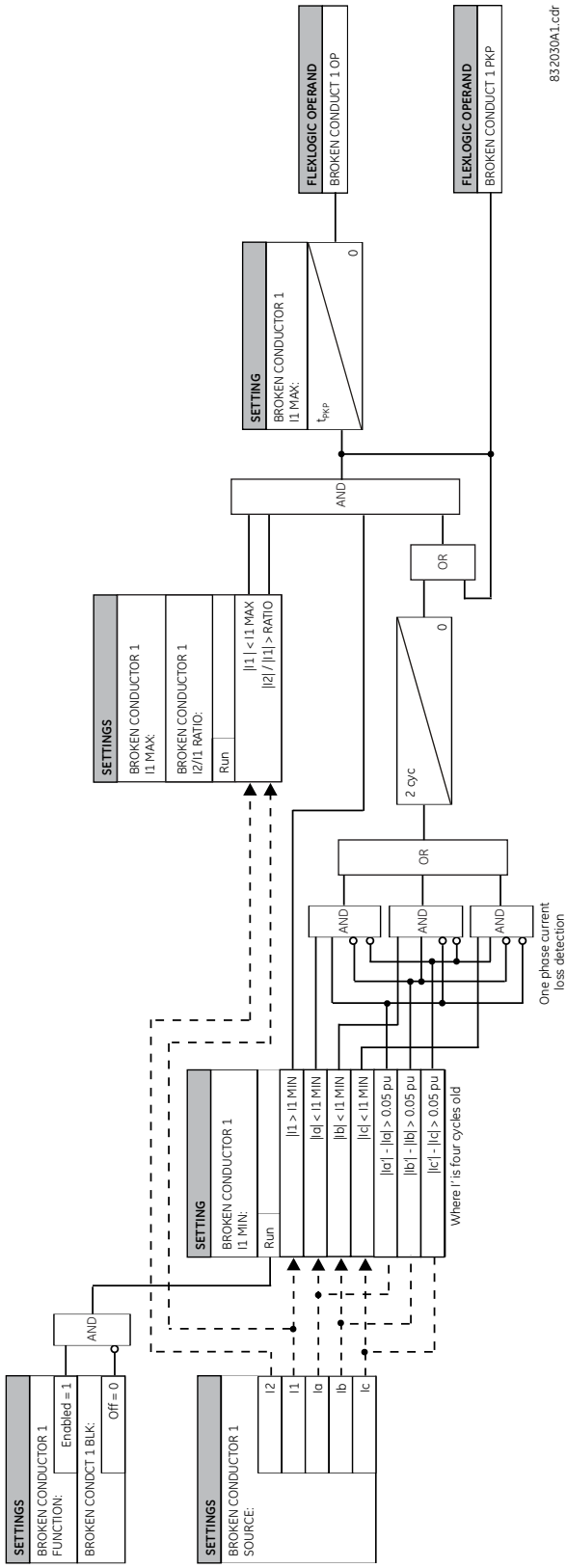

5.9.0.9 Thermal overload protection (ANSI 49)

SETTINGS ⇨⇩ CONTROL ELEMENTS ⇨⇩ MONITORING ELEMENTS ⇨⇩ THERMAL OVERLOAD PROTECTION ⇨⇩ THERMAL PROTECTION 1(2)

■ THERMAL ■ PROTECTION 1	⇔	**THERMAL PROTECTION 1 FUNCTION: Disabled**	Range: Disabled, Enabled
	⇩	**THERMAL PROTECTION 1 SOURCE: SRC1**	Range: SRC 1, SRC 2, SRC 3, SRC 4
	⇩	**THERMAL PROTECTION 1 BASE CURR: 0.80 pu**	Range: 0.20 to 3.00 pu in steps of 0.01
	⇩	**THERMAL PROTECTION 1 k FACTOR: 1.10**	Range: 1.00 to 1.20 in steps of 0.05
	⇩	**THERM PROT 1 TRIP TIME CONST: 45 min.**	Range: 0 to 1000 min. in steps of 1
	⇩	**THERM PROT 1 RESET TIME CONST: 45 min.**	Range: 0 to 1000 min. in steps of 1
	⇩	**THERM PROT 1 MINIM RESET TIME: 20 min.**	Range: 0 to 1000 min. in steps of 1
	⇩	**THERM PROT 1 RESET: Off**	Range: FlexLogic operand
	⇩	**THERM PROT 1 BLOCK: Off**	Range: FlexLogic operand
	⇩	**THERMAL PROTECTION 1 TARGET: Self-reset**	Range: Self-reset, Latched, Disabled
	⇩	**THERMAL PROTECTION 1 EVENTS: Disabled**	Range: Disabled, Enabled

The thermal overload protection element corresponds to the IEC 255-8 standard and is used to detect thermal overload conditions in protected power system elements. Choosing an appropriate time constant element can be used to protect different elements of the power system. The cold curve characteristic is applied when the estimated I_p current is less than 10% of the base current. If I_p current is greater or equal than 10% than the base current, then the hot curve characteristic is applied. I_p current is estimated with a fixed time constant for both cooling and heating that reaches to the final value in two seconds on a step change (either step up or step down) signal.

The IEC255-8 cold curve is defined as follows:

$$t_{op} = \tau_{op} \times \ln\left(\frac{I^2}{I^2 - (k \times I_B)^2}\right) \quad \textbf{Eq. 5-33}$$

The IEC255-8 hot curve is defined as follows:

$$t_{op} = \tau_{op} \times \ln\left(\frac{I^2 - I_p^2}{I^2 - (k \times I_B)^2}\right) \quad \textbf{Eq. 5-34}$$

where

t_{op} = time to operate
τ_{op} = thermal protection trip time constant
I = measured overload RMS current
I_p = measured load RMS current before overload occurs
k = IEC 255-8 k-factor applied to I_B, defining maximum permissible current above nominal current
I_B = protected element base (nominal) current

To ensure element accuracy for high overcurrent conditions, the maximum value of $I/(k \times I_B)$ is limited to 8, even when realistically it is exceeding this value.

The reset time of the thermal overload protection element is also time delayed using following formula:

$$t_{rst} = \tau_{rst} \times \ln\left(\frac{(k \times I_B)^2}{\left|I^2 - (k \times I_B)^2\right|}\right) + T_{min} \qquad \text{Eq. 5-35}$$

where

τ_{rst} = thermal protection trip time constant
T_{min} = a minimum reset time setting

Figure 5-157: IEC 255-8 sample operate and reset curves

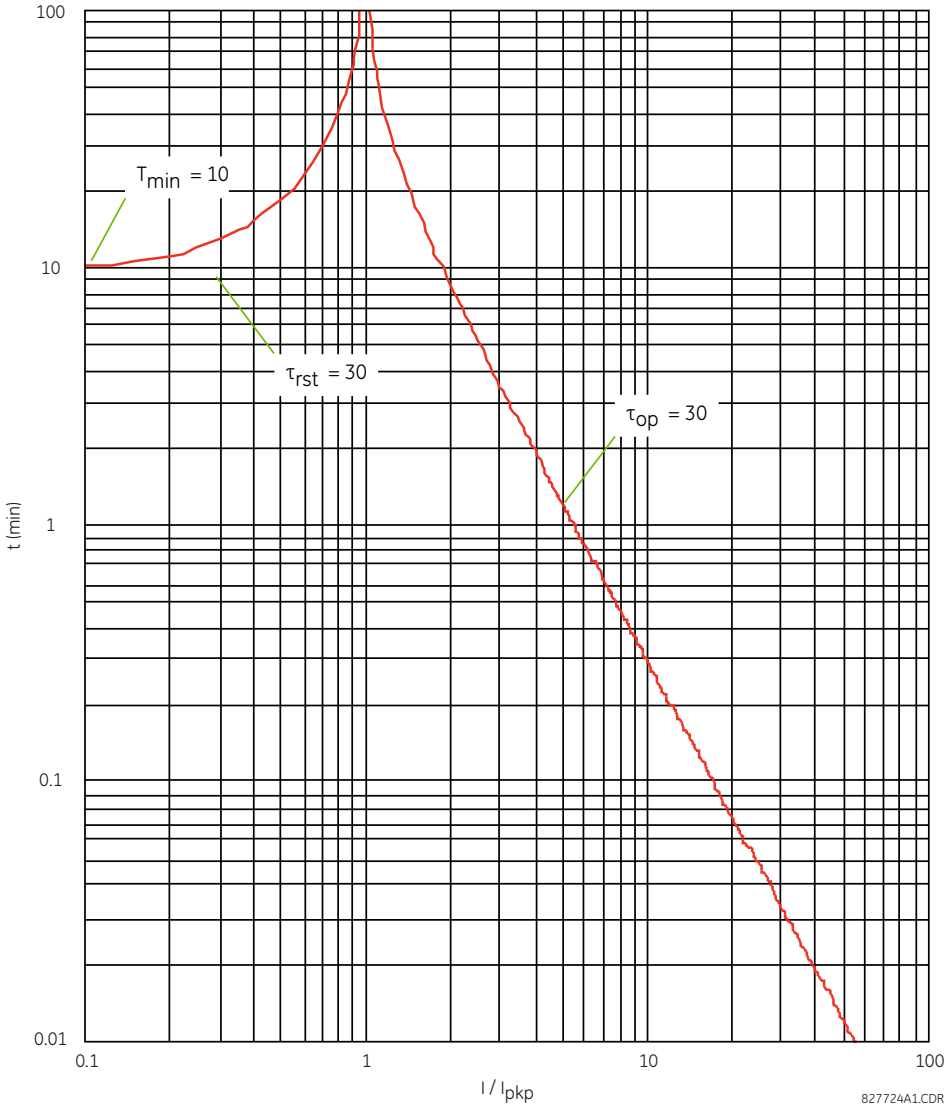

The thermal overload protection element estimates accumulated thermal energy E using the following equations calculated each power cycle. When current is greater than the pickup level, $I_n > k \times I_B$, element starts increasing the thermal energy:

$$E_n = E_{n-1} + \frac{\Delta t}{t_{op(In)}} \qquad \text{Eq. 5-36}$$

When current is less than the dropout level, $I_n > 0.97 \times k \times I_B$, the element starts decreasing the thermal energy:

$$E_n = E_{n-1} - \frac{\Delta t}{t_{rst(In)}} \quad \textbf{Eq. 5-37}$$

where

Δt is the power cycle duration
n is the power cycle index
$t_{op(In)}$ is the trip time calculated at index n as per the IEC255-8 cold curve or hot curve equations
$t_{rst(In)}$ is the reset time calculated at index n as per the reset time equation
I_n is the measured overload RMS current at index n
E_n is the accumulated energy at index n
E_{n-1} is the accumulated energy at index n – 1

The thermal overload protection element removes the **THERMAL PROT 1 OP** output operand when E < 0.05. In case of emergency, the thermal memory and **THERMAL PROT 1 OP** output operand can be reset using **THERM PROT 1 RESET** setting. All calculations are performed per phase. If the accumulated energy reaches value 1 in any phase, the thermal overload protection element operates and only resets when energy is less than 0.05 in all three phases.

Table 5-43: Typical time constants

Protected equipment	Time constant	Minimum reset time
Capacitor bank	10 minutes	30 minutes
Overhead line	10 minutes	20 minutes
Air-core reactor	40 minutes	30 minutes
Busbar	60 minutes	20 minutes
Underground cable	20 to 60 minutes	60 minutes

The figure shows the logic for the thermal overload protection element.

Figure 5-158: Thermal overload protection logic

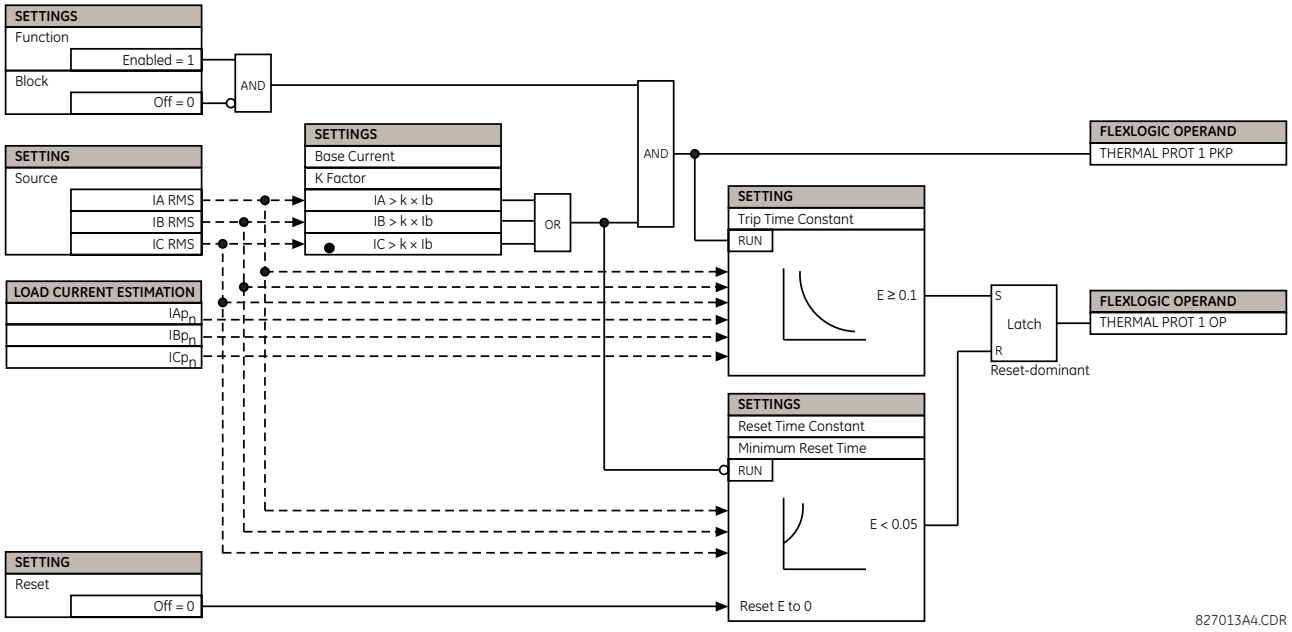

5.9.1 Cold load pickup

SETTINGS ⇨⇩ CONTROL ELEMENTS ⇨⇩ COLD LOAD PICKUP ⇨ COLD LOAD PICKUP 1(2)

■ COLD LOAD PICKUP 1 ■	⇔	**COLD LOAD 1 FUNCTION: Disabled**	Range: Disabled, Enabled
	⇳	**COLD LOAD 1 PICKUP SOURCE: SRC 1**	Range: SRC 1, SRC 2, SRC 3, SRC 4
	⇳	**COLD LOAD 1 INIT: Off**	Range: FlexLogic operand
	⇳	**COLD LOAD 1 BLK: Off**	Range: FlexLogic operand
	⇳	**OUTAGE TIME BEFORE COLD LOAD1: 1000 s**	Range: 0 to 1000 s in steps of 1
	⇧	**ON-LOAD TIME BEFORE RESET1: 100.000**	Range: 0.000 to 1000 000.000 s in steps of 0.001

Cold load is the restoration of current into the system after being off. A cold load condition can be caused by a prolonged outage of the load, by opening of the circuit breaker, or by a loss of supply even if the breaker remains closed. Upon the return of the source, the circuit experiences inrush current into connected transformers, accelerating currents into motors, and simultaneous demand from many other loads because the normal load diversity has been lost.

There are two identical Cold Load Pickup features available, numbered 1 and 2.

This feature can be used to change protection element settings when (by changing to another settings group) a cold load condition is expected to occur. During the cold load condition, the current level can be above the pickup setting of some protection elements, so this feature can be used to prevent the tripping that is otherwise caused by the normal settings.

Without historical data on a particular feeder, some utilities assume an initial cold load current of about 500% of normal load, decaying to 300% after 1 second, 200% after 2 seconds, and 150% after 3 seconds.

Figure 5-159: Typical cold load pickup characteristics

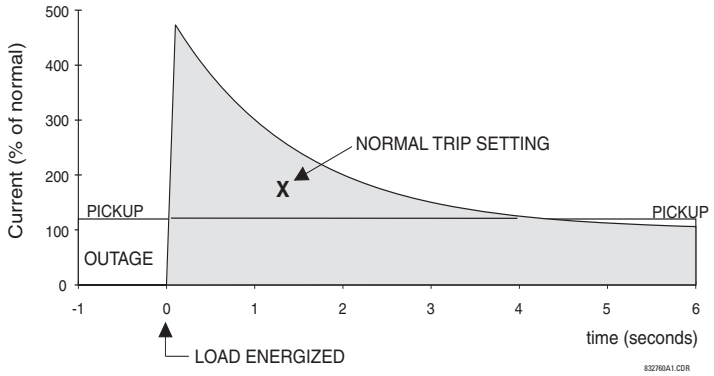

There are two methods to initiate operation of this feature.

The first initiation method is automatic response to a loss of the source to the feeder, by detecting that all phase currents have declined to zero for some time. When zero current on all phases has been detected, a timer starts. This timer is set to an interval after which it is expected the normal load diversity has been lost, so setting groups are not changed for short duration outages. After the delay interval, the output operand is set.

The second initiation method is automatic response to an event that sets an operand, such as an operator-initiated virtual input. This second method of initiation sets the output operand immediately.

Both initiating inputs can be inhibited by a blocking input. Once cold load pickup is in operation, the output operand remains set until at least one phase of the load has returned to a level above 2% of CT nominal for the interval programmed by the **ON-LOAD TIME BEFORE RESET** setting has expired. The reset delay interval is intended to be set to a period until the feeder load has decayed to normal levels, after which other features can be used to switch setting groups.

Figure 5-160: Cold load pickup logic

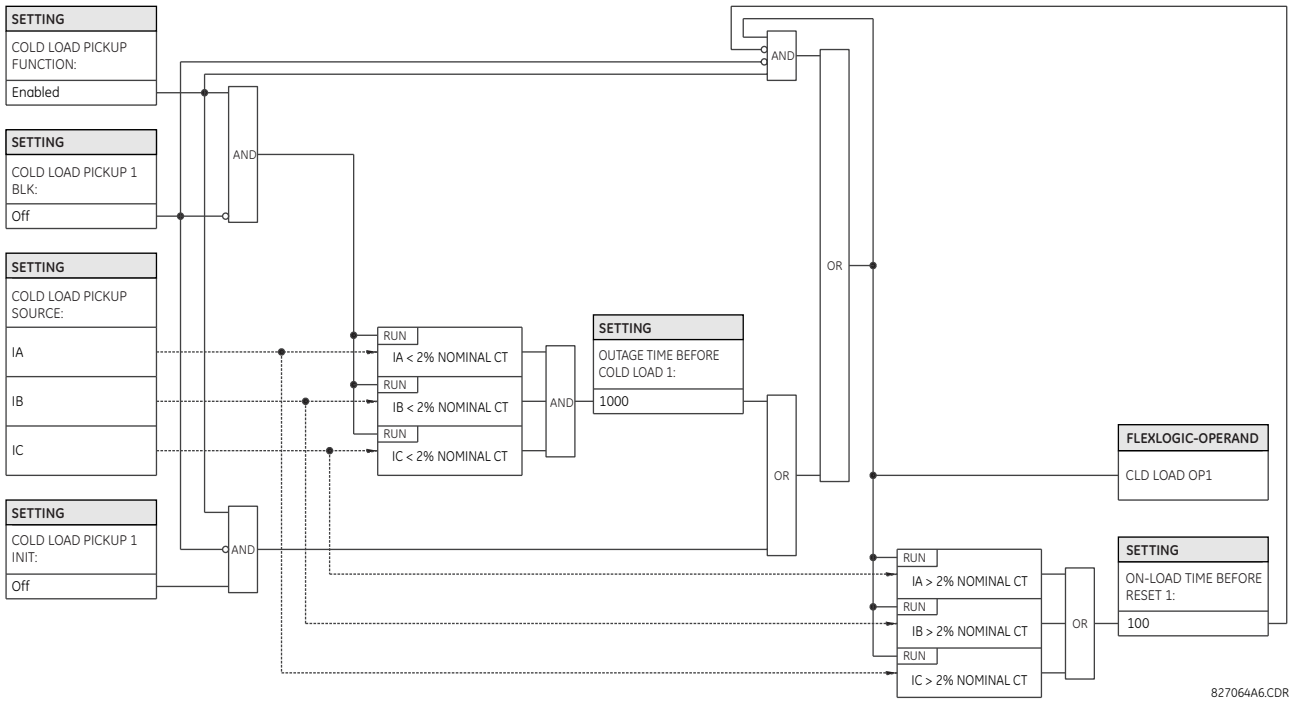

5.10 Inputs/outputs

5.10.1 Contact inputs

SETTINGS ⇨⇩ INPUTS/OUTPUTS ⇨ CONTACT INPUTS

■ CONTACT INPUTS ■

⇔ **■ CONTACT INPUT H5a ■**

⇔ **CONTACT INPUT H5a ID: Cont Ip 1** Range: up to 12 alphanumeric characters

⇩ **CONTACT INPUT H5a DEBNCE TIME: 6.0 ms** Range: 0.0 to 16.0 ms in steps of 0.5

⇧ **CONTACT INPUT H5a EVENTS: Disabled** Range: Disabled, Enabled

↓

⇩ **■ CONTACT INPUT xxx ■**

⇧ **■ CONTACT INPUT ■ THRESHOLDS**

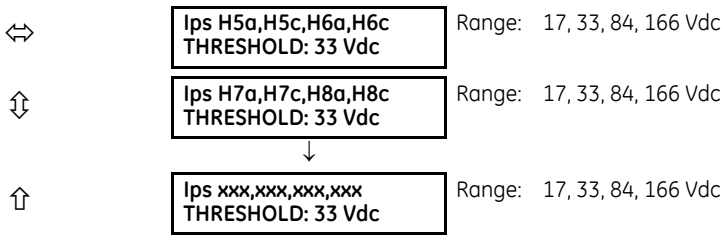

Contact inputs and outputs are digital signals associated with connections to hard-wired contacts. Wet and dry contacts are supported.

The contact inputs menu contains configuration settings for each contact input as well as voltage thresholds for each group of four contact inputs. Upon startup, the relay processor determines (from an assessment of the installed modules) which contact inputs are available and then display settings for only those inputs.

An alphanumeric ID can be assigned to a contact input for diagnostic, setting, and event recording purposes. The CONTACT IP X On (Logic 1) FlexLogic operand corresponds to contact input "X" being closed, while CONTACT IP X Off corresponds to contact input "X" being open. The **CONTACT INPUT DEBNCE TIME** defines the time required for the contact to overcome 'contact bouncing' conditions. As this time differs for different contact types and manufacturers, set it as a maximum contact debounce time (per manufacturer specifications) plus some margin to ensure proper operation. If **CONTACT INPUT EVENTS** is set to "Enabled," every change in the contact input state triggers an event.

A raw status is scanned for all Contact Inputs synchronously at the constant rate of 0.5 ms as shown in the following figure. The DC input voltage is compared to a user-settable threshold. A new contact input state must be maintained for a user-settable debounce time in order for the F60 to validate the new contact state. In the following figure, the debounce time is set at 2.5 ms; thus the 6th sample in a row validates the change of state (mark no. 1 in the diagram). Once validated (de-bounced), the contact input asserts a corresponding FlexLogic operand and logs an event as per user setting.

A time stamp of the first sample in the sequence that validates the new state is used when logging the change of the contact input into the Event Recorder (mark no. 2 in the figure).

Protection and control elements, as well as FlexLogic equations and timers, are executed eight times in a power system cycle. The protection pass duration is controlled by the frequency tracking mechanism. The FlexLogic operand reflecting the debounced state of the contact is updated at the protection pass following the validation (marks no. 3 and 4 on the figure that follows). The update is performed at the beginning of the protection pass so all protection and control functions, as well as FlexLogic equations, are fed with the updated states of the contact inputs.

The FlexLogic operand response time to the contact input change is equal to the debounce time setting plus up to one protection pass (variable and depending on system frequency if frequency tracking enabled). If the change of state occurs just after a protection pass, the recognition is delayed until the subsequent protection pass; that is, by the entire duration of the protection pass. If the change occurs just prior to a protection pass, the state is recognized immediately. Statistically a delay of half the protection pass is expected. Owing to the 0.5 ms scan rate, the time resolution for the input contact is below 1 ms.

For example, eight protection passes per cycle on a 60 Hz system correspond to a protection pass every 2.1 ms. With a contact debounce time setting of 3.0 ms, the FlexLogic operand-assert time limits are: 3.0 + 0.0 = 3.0 ms and 3.0 + 2.1 = 5.1 ms. These time limits depend on how soon the protection pass runs after the debouncing time.

Regardless of the contact debounce time setting, the contact input event is time-stamped with a 1 μs accuracy using the time of the first scan corresponding to the new state (mark no. 2 shown). Therefore, the time stamp reflects a change in the DC voltage across the contact input terminals that was not accidental as it was subsequently validated using the debounce timer. Keep in mind that the associated FlexLogic operand is asserted/de-asserted later, after validating the change.

The debounce algorithm is symmetrical: the same procedure and debounce time are used to filter the LOW-HIGH (marks no.1, 2, 3, and 4 in the figure) and HIGH-LOW (marks no. 5, 6, 7, and 8) transitions.

Figure 5-161: Input contact debouncing mechanism and time-stamping sample timing

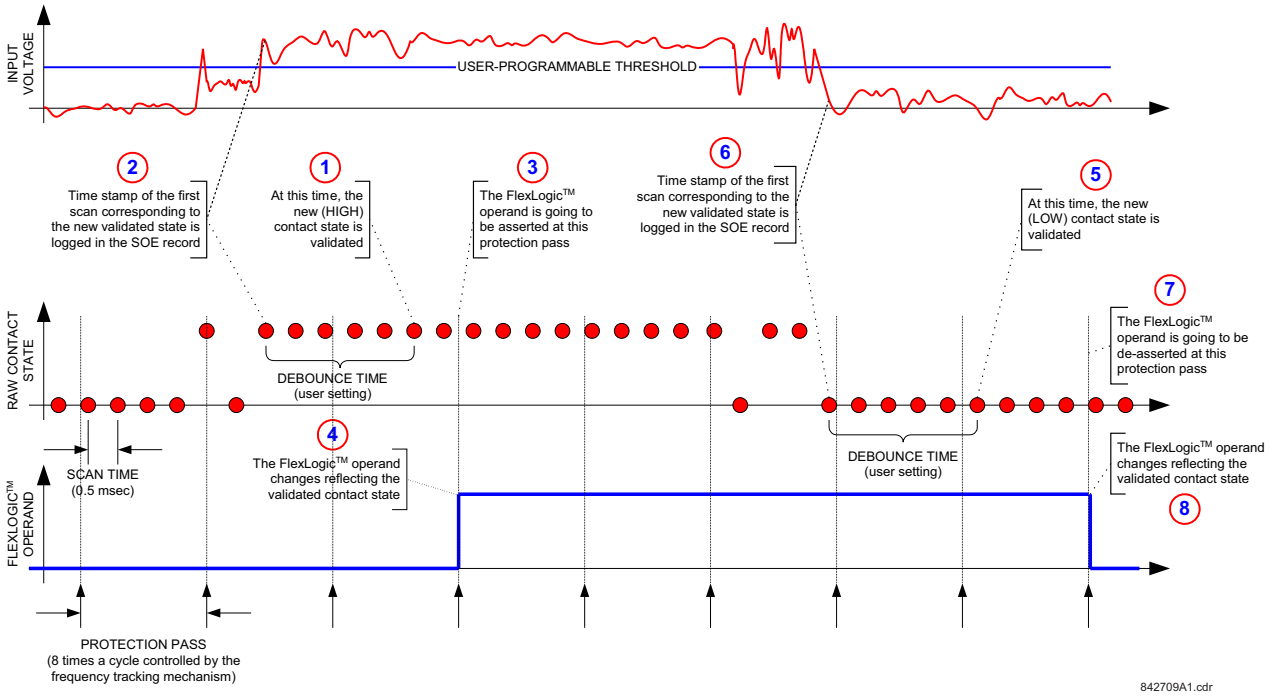

Contact inputs are isolated in groups of four to allow connection of wet contacts from different voltage sources for each group. The **CONTACT INPUT THRESHOLDS** determine the minimum voltage required to detect a closed contact input. This value is selected according to the following criteria: 17 for 24 V sources, 33 for 48 V sources, 84 for 110 to 125 V sources and 166 for 250 V sources.

For example, to use contact input H5a as a status input from the breaker 52b contact to seal-in the trip relay and record it in the Event Records menu, make the following settings changes:

CONTACT INPUT H5a ID: "Breaker Closed (52b)"
CONTACT INPUT H5a EVENTS: "Enabled"

Note that the 52b contact is closed when the breaker is open and open when the breaker is closed.

5.10.2 Virtual inputs

SETTINGS ⇨⇩ INPUTS/OUTPUTS ⇨⇩ VIRTUAL INPUTS ⇨ VIRTUAL INPUT 1(64)

■ VIRTUAL INPUT 1 ■	⇔	VIRTUAL INPUT 1 FUNCTION: Disabled	Range: Disabled, Enabled
	⇩	VIRTUAL INPUT 1 ID: Virt Ip 1	Range: up to 12 alphanumeric characters
	⇩	VIRTUAL INPUT 1 TYPE: Latched	Range: Self-Reset, Latched
	⇩	VIRTUAL INPUT 1 EVENTS: Disabled	Range: Disabled, Enabled

The virtual inputs and outputs are digital signals associated with UR-series internal logic signals. Virtual inputs include signals generated by the local user interface. The virtual outputs are outputs of FlexLogic™ equations used to customize the device. Virtual outputs can also serve as virtual inputs to FlexLogic equations.

There are 64 virtual inputs that can be individually programmed to respond to input signals from the keypad (via the **COMMANDS** menu) and communications protocols. All virtual input operands are defaulted to "Off" (logic 0) unless the appropriate input signal is received.

If the **VIRTUAL INPUT x FUNCTION** is to "Disabled," the input is forced to off (logic 0) regardless of any attempt to alter the input. If set to "Enabled," the input operates as shown on the logic diagram and generates output FlexLogic operands in response to received input signals and the applied settings.

There are two types of operation: self-reset and latched. If **VIRTUAL INPUT x type** is "Self-Reset," when the input signal transits from off to on, the output operand is set to on for only one evaluation of the FlexLogic equations and then return to off. If set to "Latched," the virtual input sets the state of the output operand to the same state as the most recent received input.

The self-reset operating mode generates the output operand for a single evaluation of the FlexLogic equations. If the operand is to be used anywhere other than internally in a FlexLogic equation, it likely needs to be lengthened in time. A FlexLogic timer with a delayed reset can perform this function.

Figure 5-162: Virtual inputs logic

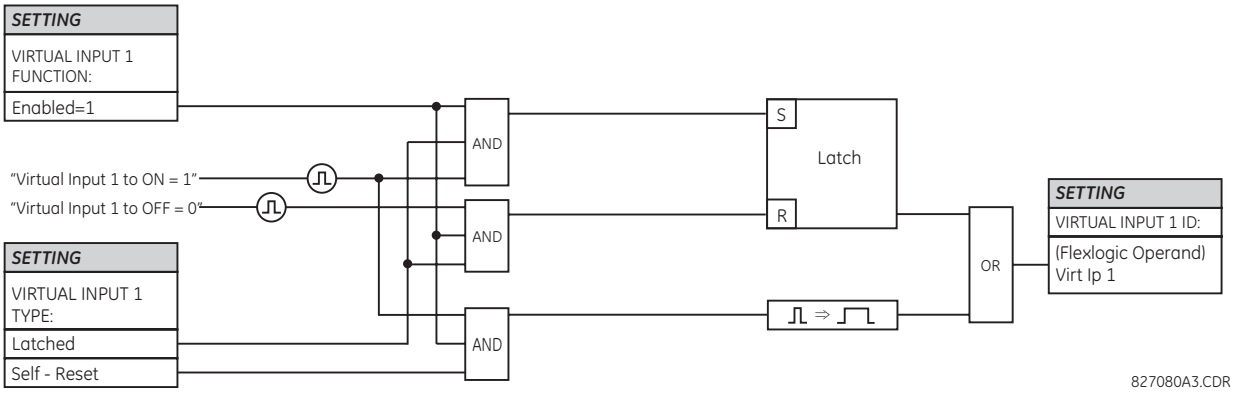

5.10.3 Contact outputs

5.10.3.1 Digital outputs

SETTINGS ⇨⇩ INPUTS/OUTPUTS ⇨⇩ CONTACT OUTPUTS ⇨⇩ CONTACT OUTPUT H1

■ **CONTACT OUTPUT H1** ■	⇔	**CONTACT OUTPUT H1 ID Cont Op 1**	Range: up to 12 alphanumeric characters
	⇩	**OUTPUT H1 OPERATE: Off**	Range: FlexLogic operand
	⇩	**OUTPUT H1 SEAL-IN: Off**	Range: FlexLogic operand
	⇧	**CONTACT OUTPUT H1 EVENTS: Enabled**	Range: Disabled, Enabled

A contact inputs and outputs are digital signals associated with connections to hard-wired contacts. Wet and dry contacts are supported.

Upon startup of the relay, the main processor determines from an assessment of the modules installed in the chassis which contact outputs are available and then presents the settings for only these outputs. Where the contact input is non-latching, the settings are as shown.

An ID can be assigned to each contact output. The signal that can **OPERATE** a contact output can be any FlexLogic operand (virtual output, element state, contact input, or virtual input). An additional FlexLogic operand can be used to **SEAL-IN** the relay. Any change of state of a contact output can be logged as an Event if programmed to do so.

For example, the trip circuit current is monitored by providing a current threshold detector in series with some Form-A contacts (see the trip circuit example in the Digital Elements section). The monitor sets a flag (see the specifications for Form-A). The name of the FlexLogic operand set by the monitor, consists of the output relay designation, followed by the name of the flag; for example, Cont OP 1 IOn.

In most breaker control circuits, the trip coil is connected in series with a breaker auxiliary contact used to interrupt current flow after the breaker has tripped, to prevent damage to the less robust initiating contact. This can be done by monitoring an auxiliary contact on the breaker which opens when the breaker has tripped, but this scheme is subject to incorrect operation caused by differences in timing between breaker auxiliary contact change-of-state and interruption of current in the trip circuit. The most dependable protection of the initiating contact is provided by directly measuring current in the tripping circuit, and using this parameter to control resetting of the initiating relay. This scheme is often called trip seal-in.

This can be realized using the Cont OP 1 IOn FlexLogic operand to seal-in the contact output as follows:

CONTACT OUTPUT H1 ID: "Cont Op 1"
OUTPUT H1 OPERATE: any suitable FlexLogic operand
OUTPUT H1 SEAL-IN: "Cont Op 1 IOn"
CONTACT OUTPUT H1 EVENTS: "Enabled"

Figure 5-163: Contact input/output module type 6A contact 1 logic

5.10.3.2 Latching outputs

SETTINGS ⇨⇩ INPUTS/OUTPUTS ⇨⇩ CONTACT OUTPUTS ⇨ CONTACT OUTPUT H1a

CONTACT OUTPUT H1a	⇔	**OUTPUT H1a ID** **L-Cont Op 1**	Range: up to 12 alphanumeric characters
	⇳	**OUTPUT H1a OPERATE:** **Off**	Range: FlexLogic operand
	⇳	**OUTPUT H1a RESET:** **Off**	Range: FlexLogic operand
	⇳	**OUTPUT H1a TYPE:** **Operate-dominant**	Range: Operate-dominant, Reset-dominant
	⇧	**OUTPUT H1a EVENTS:** **Disabled**	Range: Disabled, Enabled

The latching output contacts are mechanically bi-stable and controlled by two separate (open and close) coils. As such they retain their position even if the relay is not powered up. The relay recognizes all latching output contact cards and populates the setting menu accordingly. On power up, the relay reads positions of the latching contacts from the hardware before executing any other functions of the relay (such as protection and control features or FlexLogic).

The latching output modules, either as a part of the relay or as individual modules, are shipped from the factory with all latching contacts opened. It is highly recommended to double-check the programming and positions of the latching contacts when replacing a module.

Since the relay asserts the output contact and reads back its position, it is possible to incorporate self-monitoring capabilities for the latching outputs. If any latching outputs exhibits a discrepancy, the LATCHING OUTPUT ERROR self-test error is declared. The error is signaled by the LATCHING OUT ERROR FlexLogic operand, event, and target message.

OUTPUT H1a OPERATE — This setting specifies a FlexLogic operand to operate the 'close coil' of the contact. The relay seals-in this input to safely close the contact. Once the contact is closed and the **RESET** input is logic 0 (off), any activity of the **OPERATE** input, such as subsequent chattering, does not have any effect. With both the **OPERATE** and **RESET** inputs active (logic 1), the response of the latching contact is specified by the **OUTPUT H1a TYPE** setting.

OUTPUT H1a RESET — This setting specifies a FlexLogic operand to operate the 'trip coil' of the contact. The relay seals-in this input to safely open the contact. Once the contact is opened and the **OPERATE** input is logic 0 (off), any activity of the **RESET** input, such as subsequent chattering, does not have any effect. With both the **OPERATE** and **RESET** inputs active (logic 1), the response of the latching contact is specified by the **OUTPUT H1a TYPE** setting.

OUTPUT H1a TYPE — This setting specifies the contact response under conflicting control inputs; that is, when both the **OPERATE** and **RESET** signals are applied. With both control inputs applied simultaneously, the contact closes if set to "Operate-dominant" and opens if set to "Reset-dominant."

Figure 5-164: Contact input/output module type 4L contact 1 logic

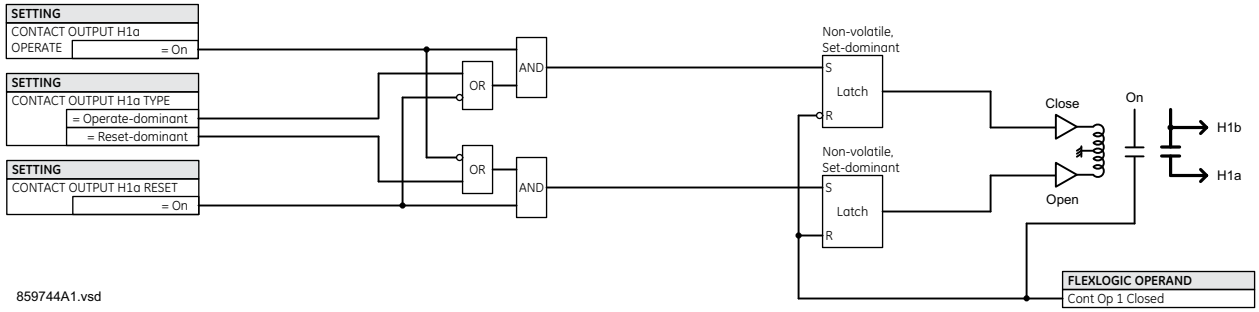

Application example 1

A latching output contact H1a is to be controlled from two user-programmable pushbuttons (buttons number 1 and 2). The following settings are applied.

Program the Latching Outputs by making the following changes in the **SETTINGS ⇨⇩ INPUTS/OUTPUTS ⇨⇩ CONTACT OUTPUTS ⇨ CONTACT OUTPUT H1a** menu (assuming an H4L module):

OUTPUT H1a OPERATE: "PUSHBUTTON 1 ON"
OUTPUT H1a RESET: "PUSHBUTTON 2 ON"

Program the pushbuttons by making the following changes in the **PRODUCT SETUP ⇨⇩ USER-PROGRAMMABLE PUSHBUTTONS ⇨⇩ USER PUSHBUTTON 1** and **USER PUSHBUTTON 2** menus:

PUSHBUTTON 1 FUNCTION: "Self-reset"
PUSHBTN 1 DROP-OUT TIME: "0.00 s"
PUSHBUTTON 2 FUNCTION: "Self-reset"
PUSHBTN 2 DROP-OUT TIME: "0.00 s"

Application example 2

A relay, having two latching contacts H1a and H1c, is to be programmed. The H1a contact is to be a Type-a contact, while the H1c contact is to be a Type-b contact (Type-a means closed after exercising the operate input; Type-b means closed after exercising the reset input). The relay is to be controlled from virtual outputs: VO1 to operate and VO2 to reset.

Program the Latching Outputs by making the following changes in the **SETTINGS ⇨⇩ INPUTS/OUTPUTS ⇨⇩ CONTACT OUTPUTS ⇨ CONTACT OUTPUT H1a** and **CONTACT OUTPUT H1c** menus (assuming an H4L module):

OUTPUT H1a OPERATE: "VO1"
OUTPUT H1a RESET: "VO2"
OUTPUT H1c OPERATE: "VO2"
OUTPUT H1c RESET: "VO1"

Since the two physical contacts in this example are mechanically separated and have individual control inputs, they do not operate at exactly the same time. A discrepancy in the range of a fraction of a maximum operating time can occur. Therefore, a pair of contacts programmed to be a multi-contact relay do not guarantee any specific sequence of operation (such as make before break). If required, the sequence of operation must be programmed explicitly by delaying some of the control inputs as shown in the next application example.

Application example 3

A make before break functionality must be added to the preceding example. An overlap of 20 ms is required to implement this functionality.

Write the following FlexLogic equation (EnerVista example shown).

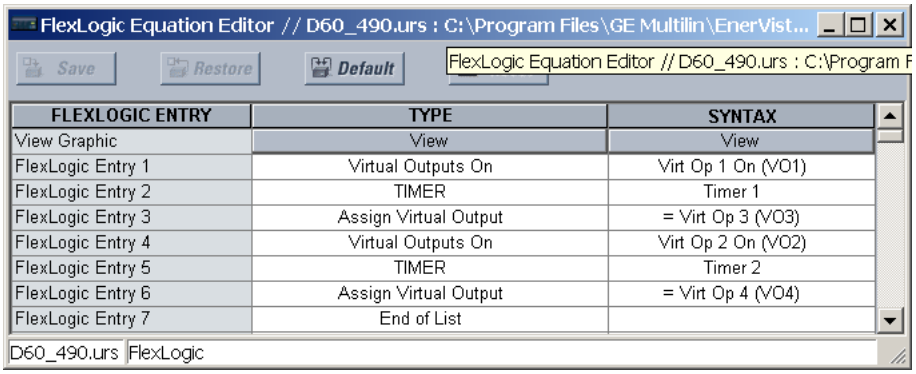

Set both timers (Timer 1 and Timer 2) to 20 ms pickup and 0 ms dropout.

Program the Latching Outputs by making the following changes in the **SETTINGS ⇨⇩ INPUTS/OUTPUTS ⇨⇩ CONTACT OUTPUTS ⇨ CONTACT OUTPUT H1a** and **CONTACT OUTPUT H1c** menus (assuming an H4L module):

OUTPUT H1a OPERATE: "VO1"
OUTPUT H1a RESET: "VO4"
OUTPUT H1c OPERATE: "VO2"
OUTPUT H1c RESET: "VO3"

Application example 4

A latching contact H1a is to be controlled from a single virtual output VO1. The contact is to remain closed as long as VO1 is high, and is to remain opened when VO1 is low. Program the relay as follows.

Write the following FlexLogic equation (EnerVista example shown).

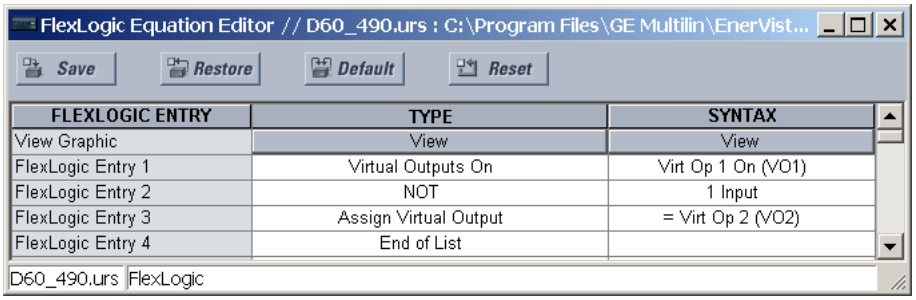

Program the Latching Outputs by making the following changes in the **SETTINGS ⇨⇩ INPUTS/OUTPUTS ⇨⇩ CONTACT OUTPUTS ⇨ CONTACT OUTPUT H1a** menu (assuming an H4L module):

OUTPUT H1a OPERATE: "VO1"
OUTPUT H1a RESET: "VO2"

5.10.4 Virtual outputs

SETTINGS ⇨⇩ INPUTS/OUTPUTS ⇨⇩ VIRTUAL OUTPUTS ⇨ VIRTUAL OUTPUT 1(96)

■ VIRTUAL OUTPUT 1 ■	⇔	VIRTUAL OUTPUT 1 ID Virt Op 1	Range: up to 12 alphanumeric characters
	⇧	VIRTUAL OUTPUT 1 EVENTS: Disabled	Range: Disabled, Enabled

The virtual inputs and outputs are digital signals associated with UR-series internal logic signals. Virtual inputs include signals generated by the local user interface. The virtual outputs are outputs of FlexLogic™ equations used to customize the device. Virtual outputs can also serve as virtual inputs to FlexLogic equations.

There are 96 virtual outputs that can be assigned using FlexLogic. If not assigned, the output is forced to 'OFF' (Logic 0). An ID also can be assigned to each virtual output. Virtual outputs are resolved in each pass through the evaluation of the FlexLogic equations. Any change of state of a virtual output can be logged as an event if programmed to do so.

For example, if Virtual Output 1 is the trip signal from FlexLogic and the trip relay is used to signal events, the settings is programmed as follows:

VIRTUAL OUTPUT 1 ID: "Trip"
VIRTUAL OUTPUT 1 EVENTS: "Disabled"

5.10.5 Resetting

SETTINGS ⇨⇩ INPUTS/OUTPUTS ⇨⇩ RESETTING

■ RESETTING ■	⇔	RESET OPERAND: Off	Range: FlexLogic operand

Some events can be programmed to latch the faceplate LED event indicators, target messages, and/or graphical panel annunciator windows. Once set, the latching mechanism holds all of the latched indicators or messages in the set state after the initiating condition has cleared until a **RESET** command is received to return these latches (not including FlexLogic latches) to the reset state where the initiating condition has cleared. The **RESET** command can be sent from the faceplate **RESET** button, a remote device via a communications channel, or any selected operand.

The three sources of **RESET** commands each activates the RESET OP FlexLogic operand. Each individual source of a **RESET** command also creates its individual operand RESET OP (PUSHBUTTON), RESET OP (COMMS), or RESET OP (OPERAND) to identify the source of the command. Each of these three operands generates an event in the event record when activated. The **RESET OPERAND** setting here selects the operand that activates the RESET OP (OPERAND) operand.

5.10.6 Direct inputs and outputs

5.10.6.1 Direct inputs

SETTINGS ⇨⇩ INPUTS/OUTPUTS ⇨⇩ DIRECT INPUTS ⇨ DIRECT INPUT 1(32)

■ DIRECT INPUT 1 ■	⇔	DIRECT INPUT 1 NAME: Dir Ip 1	Range: up to 12 alphanumeric characters
	⇳	DIRECT INPUT 1 DEVICE ID: 0	Range: 0 to 16
	⇳	DIRECT INPUT 1 BIT NUMBER: 0	Range: 0 to 32
	⇳	DIRECT INPUT 1 DEFAULT: Off	Range: On, Off, Latest/On, Latest/Off
	⇧	DIRECT INPUT 1 EVENTS: Disabled	Range: Enabled, Disabled

These settings specify how the direct input information is processed.

DIRECT INPUT 1 NAME — This setting allows the user to assign a descriptive name to the direct input.

DIRECT INPUT 1 DEVICE ID — Represents the source of direct input 1. The specified direct input is driven by the device identified here.

DIRECT INPUT 1 BIT NUMBER — The bit number to extract the state for direct input 1. Direct Input 1 is driven by the bit identified as **DIRECT INPUT 1 BIT NUMBER**. This corresponds to the direct output number of the sending device.

DIRECT INPUT 1 DEFAULT — Represents the state of the direct input when the associated direct device is offline. The following choices are available:

- On — Defaults the input to Logic 1
- Off — Defaults the input to Logic 0
- Latest/On — Freezes the input in case of lost communications. When the latest state is not known, such as after relay power-up but before the first communication exchange, the input defaults to Logic 1. When communication resumes, the input becomes fully operational.
- Latest/Off — Freezes the input in case of lost communications. When the latest state is not known, such as after relay power-up but before the first communication exchange, the input defaults to Logic 0. When communication resumes, the input becomes fully operational.

5.10.6.2 Direct outputs

SETTINGS ⇨⇩ INPUTS/OUTPUTS ⇨⇩ DIRECT OUTPUTS ⇨ DIRECT OUTPUT 1(32)

■ DIRECT OUTPUT 1 ■	⇔	DIRECT OUT 1 NAME: Dir Out 1	Range: up to 12 alphanumeric characters
	⇩	DIRECT OUT 1 OPERAND: Off	Range: FlexLogic operand
	⇧	DIRECT OUTPUT 1 EVENTS: Disabled	Range: Enabled, Disabled

DIRECT OUT 1 NAME — This setting allows the user to assign a descriptive name to the direct output.

DIR OUT 1 OPERAND — This sets the FlexLogic operand that determines the state of this direct output.

5.10.6.3 Application examples

The examples introduced in the earlier Direct Inputs and Outputs section (part of the Product Setup section) are continued here to illustrate usage of the direct inputs and outputs.

Example 1: Extending input/output capabilities of a UR relay

Consider an application that requires additional quantities of contact inputs or output contacts or lines of programmable logic that exceed the capabilities of a single UR-series chassis. The problem is solved by adding an extra UR-series IED, such as the C30, to satisfy the additional inputs/outputs and programmable logic requirements. The figure shows that two IEDs are connected via single-channel digital communication cards.

Figure 5-165: Input and output extension via direct inputs and outputs

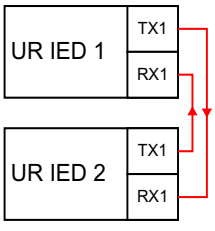

Assume that contact input 1 from UR IED 2 is to be used by UR IED 1. The following settings are applied (Direct Input 5 and bit number 12 are used, as an example).

UR IED 1:

DIRECT INPUT 5 DEVICE ID = "2"
DIRECT INPUT 5 BIT NUMBER = "12"

UR IED 2:

DIRECT OUT 12 OPERAND = "Cont Ip 1 On"

The Cont Ip 1 On operand of UR IED 2 is now available in UR IED 1 as DIRECT INPUT 5 ON.

Example 2: Interlocking busbar protection

A simple interlocking busbar protection scheme can be accomplished by sending a blocking signal from downstream devices, say 2, 3 and 4, to the upstream device that monitors a single incomer of the busbar, as shown in the figure.

Figure 5-166: Sample interlocking busbar protection scheme

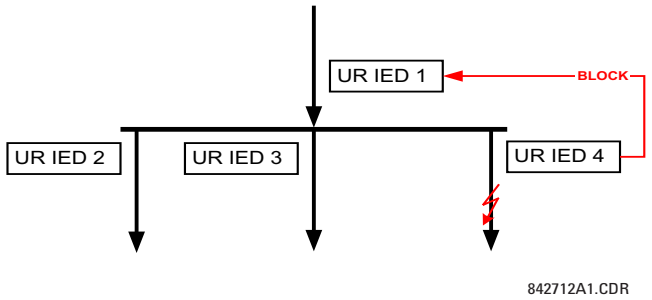

Assume that Phase Instantaneous Overcurrent 1 is used by Devices 2, 3, and 4 to block Device 1. If not blocked, Device 1 trips the bus upon detecting a fault and applying a short coordination time delay.

The following settings are applied (assume Bit 3 is used by all 3 devices to send the blocking signal and Direct Inputs 7, 8, and 9 are used by the receiving device to monitor the three blocking signals).

UR IED 2:

DIRECT OUT 3 OPERAND: "PHASE IOC1 OP"

UR IED 3:

DIRECT OUT 3 OPERAND: "PHASE IOC1 OP"

UR IED 4:

DIRECT OUT 3 OPERAND: "PHASE IOC1 OP"

UR IED 1:

DIRECT INPUT 7 DEVICE ID: "2"
DIRECT INPUT 7 BIT NUMBER: "3"
DIRECT INPUT 7 DEFAULT STATE: select "On" for security, select "Off" for dependability

DIRECT INPUT 8 DEVICE ID: "3"
DIRECT INPUT 8 BIT NUMBER: "3"
DIRECT INPUT 8 DEFAULT STATE: select "On" for security, select "Off" for dependability

DIRECT INPUT 9 DEVICE ID: "4"
DIRECT INPUT 9 BIT NUMBER: "3"
DIRECT INPUT 9 DEFAULT STATE: select "On" for security, select "Off" for dependability

Now the three blocking signals are available in UR IED 1 as DIRECT INPUT 7 ON, DIRECT INPUT 8 ON, and DIRECT INPUT 9 ON. Upon losing communications or a device, the scheme is inclined to block (if any default state is set to "On"), or to trip the bus on any overcurrent condition (all default states set to "Off").

Example 3: Pilot-aided schemes

Consider a three-terminal line protection application shown in the following figure.

Figure 5-167: Three-terminal line application

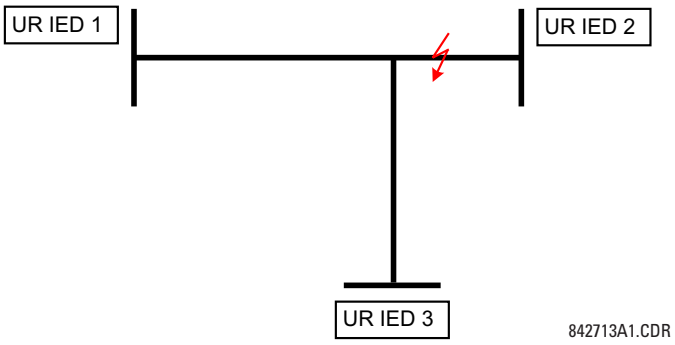

Assume the Hybrid Permissive Overreaching Transfer Trip (Hybrid POTT) scheme is applied using the architecture shown as follows. The scheme output operand HYB POTT TX1 is used to key the permission.

Figure 5-168: Single-channel open-loop configuration

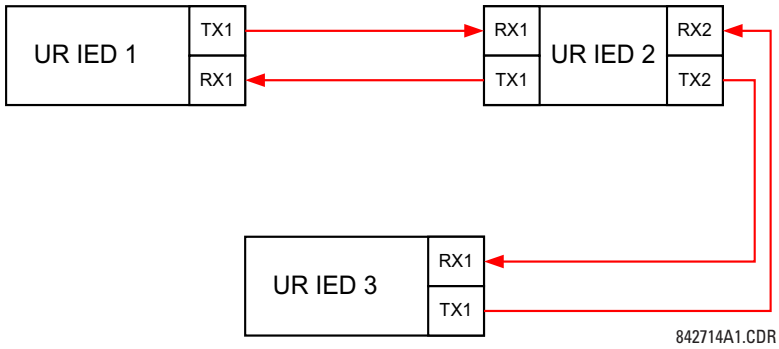

In this architecture, Devices 1 and 3 do not communicate directly. Therefore, Device 2 must act as a 'bridge'. The following settings are applied:

UR IEC 1:

DIRECT OUT 2 OPERAND: "HYB POTT TX1"
DIRECT INPUT 5 DEVICE ID: "2"
DIRECT INPUT 5 BIT NUMBER: "2" (this is a message from IED 2)
DIRECT INPUT 6 DEVICE ID: "2"
DIRECT INPUT 6 BIT NUMBER: "4" (effectively, this is a message from IED 3)

UR IED 3:

DIRECT OUT 2 OPERAND: "HYB POTT TX1"
DIRECT INPUT 5 DEVICE ID: "2"
DIRECT INPUT 5 BIT NUMBER: "2" (this is a message from IED 2)
DIRECT INPUT 6 DEVICE ID: "2"
DIRECT INPUT 6 BIT NUMBER: "3" (effectively, this is a message from IED 1)

UR IED 2:

DIRECT INPUT 5 DEVICE ID: "1"
DIRECT INPUT 5 BIT NUMBER: "2"
DIRECT INPUT 6 DEVICE ID: "3"
DIRECT INPUT 6 BIT NUMBER: "2"

DIRECT OUT 2 OPERAND: "HYB POTT TX1"
DIRECT OUT 3 OPERAND: "DIRECT INPUT 5" (forward a message from 1 to 3)
DIRECT OUT 4 OPERAND: "DIRECT INPUT 6" (forward a message from 3 to 1)

The figure shows the signal flow among the three IEDs.

Figure 5-169: Signal flow for direct input and output

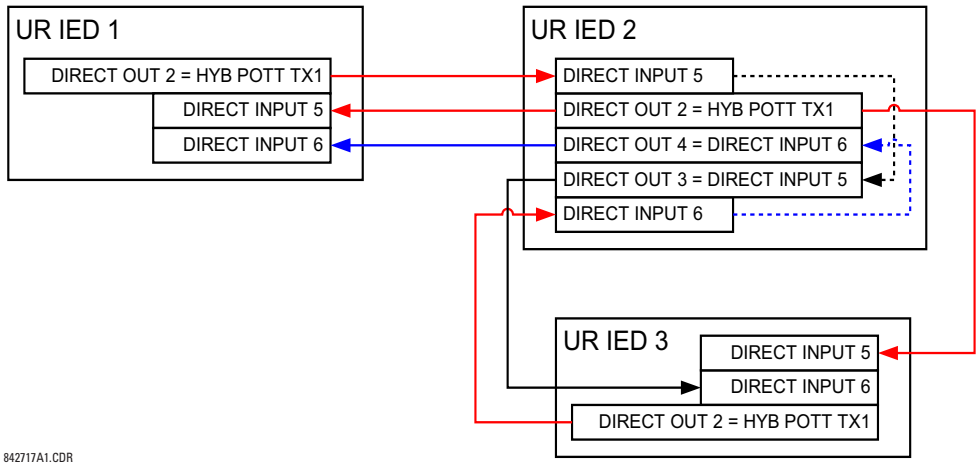

In three-terminal applications, both the remote terminals must grant permission to trip. Therefore, at each terminal, direct inputs 5 and 6 are ANDed in FlexLogic and the resulting operand configured as the permission to trip (**HYB POTT RX1** setting).

5.10.7 Teleprotection

5.10.7.1 Overview

The relay provides 16 teleprotection inputs on communications channel 1 (numbered 1-1 through 1-16) and 16 teleprotection inputs on communications channel 2 (on two-terminals two-channel and three-terminal systems only, numbered 2-1 through 2-16). The remote relay connected to channels 1 and 2 of the local relay is programmed by assigning FlexLogic operands to be sent via the selected communications channel. This allows the user to create distributed protection and control schemes via dedicated communications channels. Some examples are directional comparison pilot schemes and direct transfer tripping. Note that failures of communications channels affect teleprotection functionality. The teleprotection function must be enabled to utilize the inputs.

5.10.7.2 Teleprotection inputs

SETTINGS ⇨⇩ INPUTS/OUTPUTS ⇨⇩ TELEPROTECTION ⇨ TELEPROT INPUTS

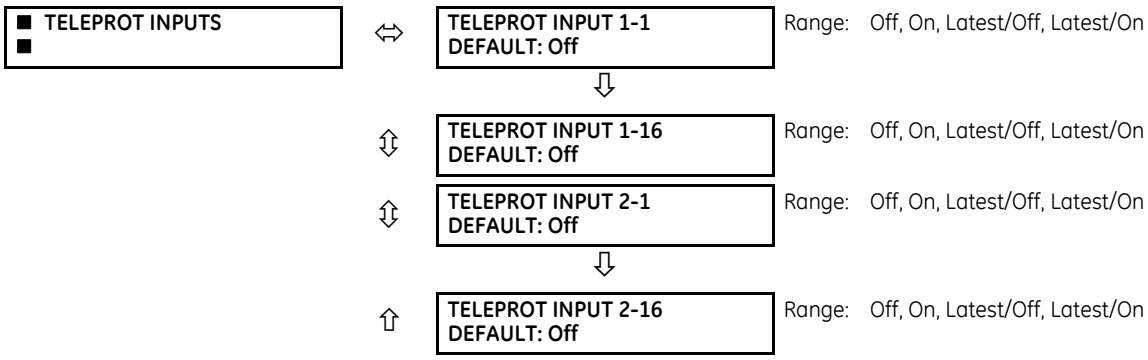

Setting the **TELEPROT INPUT ~~ DEFAULT** setting to "On" defaults the input to logic 1 when the channel fails. A value of "Off" defaults the input to logic 0 when the channel fails.

The "Latest/On" and "Latest/Off" values freeze the input in case of lost communications. If the latest state is not known, such as after relay power-up but before the first communication exchange, then the input defaults to logic 1 for "Latest/On" and logic 0 for "Latest/Off."

5.10.7.3 Teleprotection outputs

SETTINGS ⇨⇩ INPUTS/OUTPUTS ⇨⇩ TELEPROTECTION ⇨⇩ TELEPROT OUTPUTS

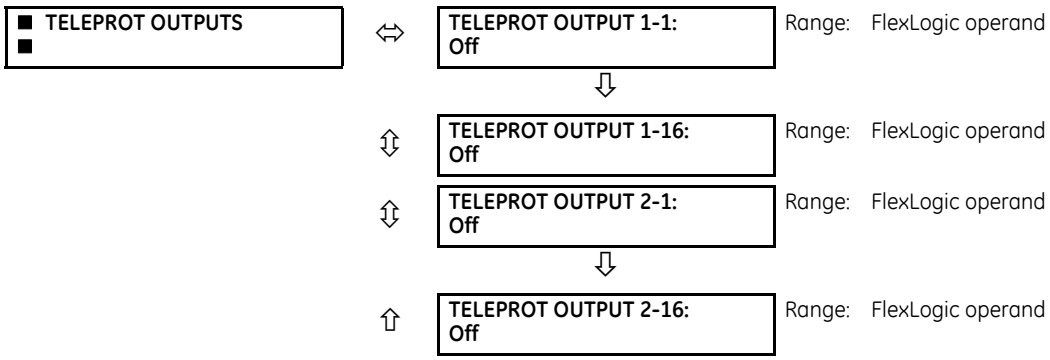

As the following figure demonstrates, processing of the teleprotection inputs/outputs is dependent on the number of communication channels and terminals. On two-terminal two-channel systems, they are processed continuously on each channel and mapped separately per channel. Therefore, to achieve redundancy, the user must assign the same operand on both channels (teleprotection outputs at the sending end or corresponding teleprotection inputs at the receiving end). On three-terminal two-channel systems, redundancy is achieved by programming signal re-transmittal in the case of channel failure between any pair of relays.

Figure 5-170: Teleprotection input/output processing

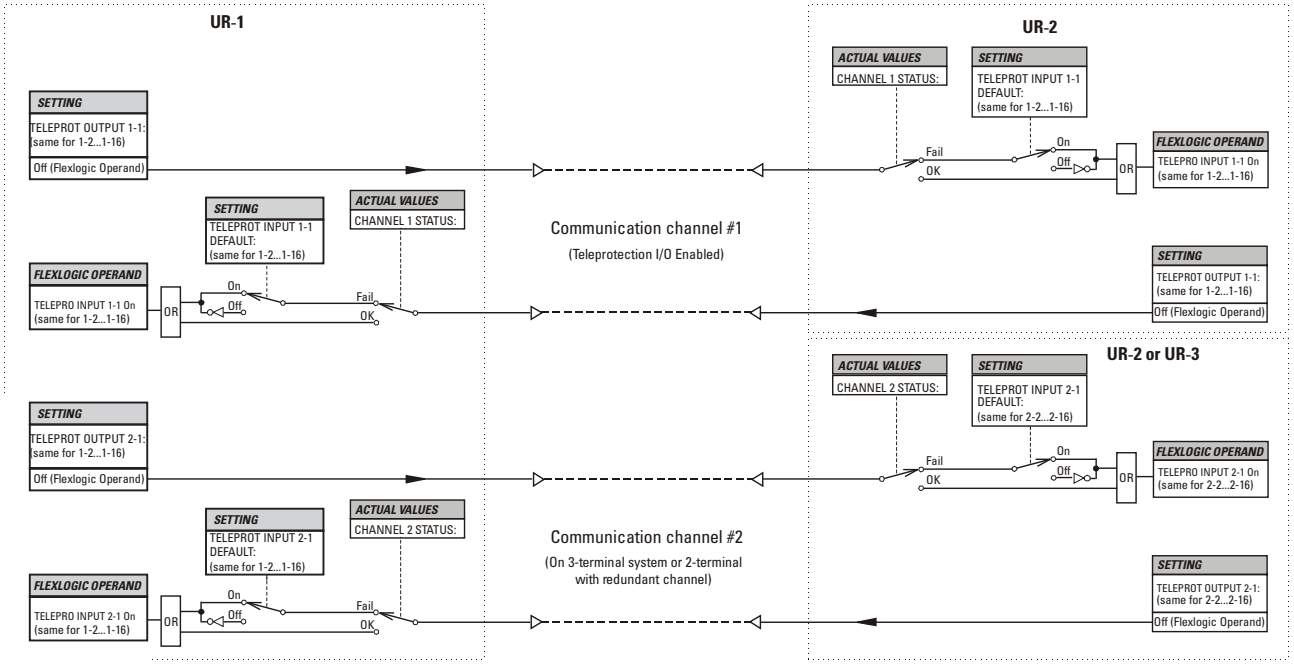

842750A2.CDR

5.11 Transducer inputs/outputs

5.11.1 DCmA inputs

SETTINGS ⇨⇩ TRANSDUCER I/O ⇨⇩ DCMA INPUTS ⇨ DCMA INPUT H1(W8)

■ DCMA INPUT H1 ■	⇔	**DCMA INPUT H1 FUNCTION: Disabled**	Range: Disabled, Enabled
	⇩	**DCMA INPUT H1 ID: DCMA Ip 1**	Range: up to 20 alphanumeric characters
	⇩	**DCMA INPUT H1 UNITS: μA**	Range: six alphanumeric characters
	⇩	**DCMA INPUT H1 RANGE: 0 to -1 mA**	Range: 0 to –1 mA, 0 to +1 mA, –1 to +1 mA, 0 to 5 mA, 0 to 10mA, 0 to 20 mA, 4 to 20 m
	⇩	**DCMA INPUT H1 MIN VALUE: 0.000**	Range: –9999.999 to +9999.999 in steps of 0.001
	⇧	**DCMA INPUT H1 MAX VALUE: 0.000**	Range: –9999.999 to +9999.999 in steps of 0.001

The F60 is provided with optional DCmA capability. This feature is specified as an option at the time of ordering. See the Order Codes section in chapter 2 for details.

Hardware and software are provided to receive signals from external transducers and to convert these signals into a digital format for use as required. The relay accepts inputs in the range of –1 to +20 mA DC, suitable for use with most common transducer output ranges; all inputs are assumed to be linear over the complete range. Hardware details are contained in chapter 3.

Before the DCmA input signal can be used, the value of the signal measured by the relay must be converted to the range and quantity of the external transducer primary input parameter, such as DC voltage or temperature. The relay simplifies this process by internally scaling the output from the external transducer and displaying the actual primary parameter.

DCmA input channels are arranged in a manner similar to CT and VT channels. Configure the individual channels with the settings shown here.

The channels are arranged in sub-modules of two channels, numbered from 1 through 8 from top to bottom. On power-up, the relay automatically generates configuration settings for every channel, based on the order code, in the same general manner that is used for CTs and VTs. Each channel is assigned a slot letter followed by the row number, 1 through 8 inclusive, which is used as the channel number. The relay generates an actual value for each available input channel.

Settings are generated automatically for every channel available in the specific relay as shown above for the first channel of a type 5F transducer module installed in slot H.

The function of the channel can be "Enabled" or "Disabled." If "Disabled," no actual values are created for the channel. An alphanumeric "ID" is assigned to each channel; this ID is included in the channel actual value, along with the programmed units associated with the parameter measured by the transducer, such as volts, °C, megawatts, and so on. This ID is also used to reference the channel as the input parameter to features designed to measure this type of parameter. The **DCMA INPUT H1 RANGE** setting specifies the mA DC range of the transducer connected to the input channel.

The **DCMA INPUT H1 MIN VALUE** and **DCMA INPUT H1 MAX VALUE** settings are used to program the span of the transducer in primary units. For example, a temperature transducer might have a span from 0 to 250 °C; in this case the **DCMA INPUT H1 MIN VALUE** value is "0" and the **DCMA INPUT H1 MAX VALUE** value is "250." Another example is a watts transducer with a span from –20 to +180 MW; in this case the **DCMA INPUT H1 MIN VALUE** value is "–20" and the **DCMA INPUT H1 MAX VALUE** value is "180." Intermediate values between the minimum and maximum values are scaled linearly.

5.11.2 RTD inputs

SETTINGS ⇨⇩ TRANSDUCER I/O ⇨⇩ RTD INPUTS ⇨ RTD INPUT H1(W8)

■ RTD INPUT H1 ■	⇔	**RTD INPUT H1 FUNCTION: Disabled**	Range: Disabled, Enabled
	⇳	**RTD INPUT H1 ID: RTD Ip 1**	Range: up to 20 alphanumeric characters
	⇧	**RTD INPUT H1 TYPE: 100Ω Platinum**	Range: 100Ω Nickel, 10Ω Copper, 100Ω Platinum, 120Ω Nickel

Hardware and software is provided to receive signals from external resistance temperature detectors and convert these signals into a digital format for use as required. These channels are intended to be connected to any of the RTD types in common use. Specific hardware details are contained in chapter 3.

RTD input channels are arranged in a manner similar to CT and VT channels. The user configures individual channels with the settings shown here.

The channels are arranged in sub-modules of two channels, numbered from 1 through 8 from top to bottom. On power-up, the relay automatically generates configuration settings for every channel, based on the order code, in the same general manner that is used for CTs and VTs. Each channel is assigned a slot letter followed by the row number, 1 through 8 inclusive, which is used as the channel number. The relay generates an actual value for each available input channel.

Settings are automatically generated for every channel available in the specific relay as shown above for the first channel of a type 5C transducer module installed in the first available slot.

The function of the channel can be either "Enabled" or "Disabled." If "Disabled," there is not an actual value created for the channel. An alphanumeric ID is assigned to the channel; this ID is included in the channel actual values. It is also used to reference the channel as the input parameter to features designed to measure this type of parameter. Selecting the type of RTD connected to the channel configures the channel.

Actions based on RTD overtemperature, such as trips or alarms, are done in conjunction with the FlexElements feature. In FlexElements, the operate level is scaled to a base of 100°C. For example, a trip level of 150°C is achieved by setting the operate level at 1.5 pu. FlexElement operands are available to FlexLogic for further interlocking or to operate an output contact directly.

See the following table for reference temperature values for each RTD type.

Table 5-44: RTD temperature vs. resistance

Temperature		Resistance (in ohms)			
°C	°F	100 Ω Pt (DIN 43760)	120 Ω Ni	100 Ω Ni	10 Ω Cu
–50	–58	80.31	86.17	71.81	7.10
–40	–40	84.27	92.76	77.30	7.49
–30	–22	88.22	99.41	82.84	7.88
–20	–4	92.16	106.15	88.45	8.26
–10	14	96.09	113.00	94.17	8.65
0	32	100.00	120.00	100.00	9.04
10	50	103.90	127.17	105.97	9.42
20	68	107.79	134.52	112.10	9.81
30	86	111.67	142.06	118.38	10.19
40	104	115.54	149.79	124.82	10.58
50	122	119.39	157.74	131.45	10.97
60	140	123.24	165.90	138.25	11.35
70	158	127.07	174.25	145.20	11.74
80	176	130.89	182.84	152.37	12.12
90	194	134.70	191.64	159.70	12.51
100	212	138.50	200.64	167.20	12.90
110	230	142.29	209.85	174.87	13.28
120	248	146.06	219.29	182.75	13.67
130	266	149.82	228.96	190.80	14.06
140	284	153.58	238.85	199.04	14.44
150	302	157.32	248.95	207.45	14.83
160	320	161.04	259.30	216.08	15.22
170	338	164.76	269.91	224.92	15.61
180	356	168.47	280.77	233.97	16.00
190	374	172.46	291.96	243.30	16.39
200	392	175.84	303.46	252.88	16.78
210	410	179.51	315.31	262.76	17.17
220	428	183.17	327.54	272.94	17.56
230	446	186.82	340.14	283.45	17.95
240	464	190.45	353.14	294.28	18.34
250	482	194.08	366.53	305.44	18.73

5.11.3 DCmA outputs

SETTINGS ⇨⇩ TRANSDUCER I/O ⇨⇩ DCMA OUTPUTS ⇨ DCMA OUTPUT H1(W8)

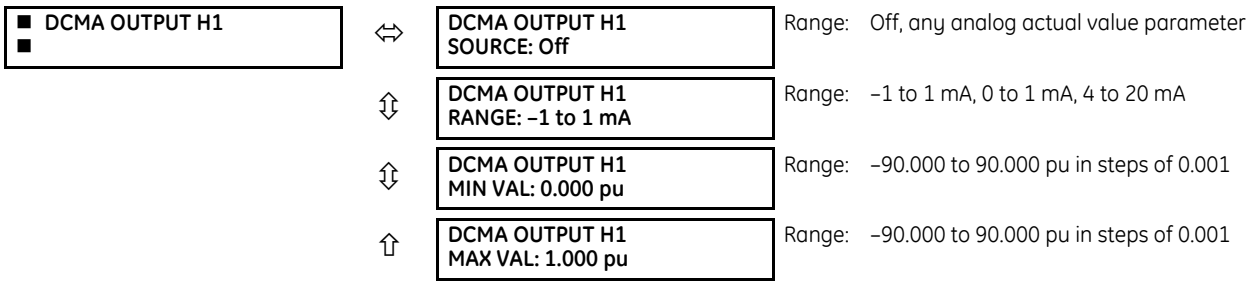

Hardware and software is provided to generate DCmA signals that allow interfacing with external equipment. Hardware details are contained in chapter 3. The DCmA output channels are arranged in a manner similar to transducer input or CT and VT channels. The user configures individual channels with the settings as follows.

The channels are arranged in sub-modules of two channels, numbered 1 through 8 from top to bottom. On power-up, the relay automatically generates configuration settings for every channel, based on the order code, in the same manner used for CTs and VTs. Each channel is assigned a slot letter followed by the row number, 1 through 8 inclusive, which is used as the channel number.

Both the output range and a signal driving a given output are user-programmable via the following settings menu (an example for channel M5 is shown).

The relay checks the driving signal (*x* in equations below) for the minimum and maximum limits, and subsequently re-scales so the limits defined as **MIN VAL** and **MAX VAL** match the output range of the hardware defined as **RANGE**. The following equation is applied:

$$I_{out} = \begin{cases} I_{min} & \text{if } x < \textbf{MIN VAL} \\ I_{max} & \text{if } x > \textbf{MAX VAL} \\ k(x - \textbf{MIN VAL}) + I_{min} & \text{otherwise} \end{cases} \quad \textbf{Eq. 5-38}$$

where

x is a driving signal specified by the **SOURCE** setting
I_{min} and I_{max} are defined by the **RANGE** setting
k is a scaling constant calculated as:

$$k = \frac{I_{max} - I_{min}}{\textbf{MAX VAL} - \textbf{MIN VAL}} \quad \textbf{Eq. 5-39}$$

The feature is intentionally inhibited if the **MAX VAL** and **MIN VAL** settings are entered incorrectly, for example when **MAX VAL** – **MIN VAL** < 0.1 pu. The resulting characteristic is illustrated in the following figure.

Figure 5-171: DCmA output characteristic

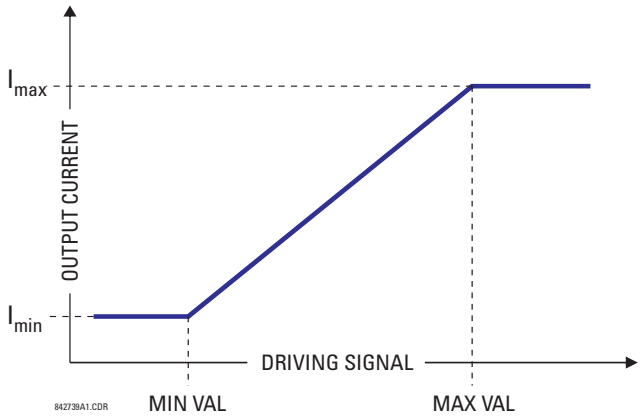

Settings

DCMA OUTPUT H1 SOURCE — This setting specifies an internal analog value to drive the analog output. Actual values (FlexAnalog parameters) such as power, current amplitude, voltage amplitude, power factor, etc. can be configured as sources driving DCmA outputs. See Appendix A for a list of FlexAnalog parameters.

DCMA OUTPUT H1 RANGE — This setting allows selection of the output range. Each DCmA channel can be set independently to work with different ranges. The three most commonly used output ranges are available.

DCMA OUTPUT H1 MIN VAL — This setting allows setting the minimum limit for the signal that drives the output. This setting is used to control the mapping between an internal analog value and the output current. The setting is entered in per-unit values. The base units are defined in the same manner as the FlexElement base units.

DCMA OUTPUT H1 MAX VAL — This setting allows setting the maximum limit for the signal that drives the output. This setting is used to control the mapping between an internal analog value and the output current. The setting is entered in per-unit values. The base units are defined in the same manner as the FlexElement base units.

NOTE

The **DCMA OUTPUT H1 MIN VAL** and **DCMA OUTPUT H1 MAX VAL** settings are ignored for power factor base units (i.e. if the **DCMA OUTPUT H1 SOURCE** is set to FlexAnalog value based on power factor measurement).

Three application examples follow.

Example: Power monitoring

A three phase active power on a 13.8 kV system measured via UR-series relay source 1 is to be monitored by the DCmA H1 output of the range of –1 to 1 mA. The following settings are applied on the relay: CT ratio = 1200:5, VT secondary 115, VT connection is delta, and VT ratio = 120. The nominal current is 800 A primary and the nominal power factor is 0.90. The power is to be monitored in both importing and exporting directions and allow for 20% overload compared to the nominal.

The nominal three-phase power is:

$$P = \sqrt{3} \times 13.8\ \text{kV} \times 0.8\ \text{kA} \times 0.9 = 17.21\ \text{MW} \quad \textbf{Eq. 5-40}$$

The three-phase power with 20% overload margin is:

$$P_{max} = 1.2 \times 17.21\ \text{MW} = 20.65\ \text{MW} \quad \textbf{Eq. 5-41}$$

The base unit for power (refer to the FlexElements section in this chapter for additional details) is:

$$P_{BASE} = 115\ \text{V} \times 120 \times 1.2\ \text{kA} = 16.56\ \text{MW} \quad \textbf{Eq. 5-42}$$

The minimum and maximum power values to be monitored (in pu) are:

$$\text{minimum power} = \frac{-20.65\ \text{MW}}{16.56\ \text{MW}} = -1.247\ \text{pu}, \quad \text{maximum power} = \frac{20.65\ \text{MW}}{16.56\ \text{MW}} = 1.247\ \text{pu} \quad \textbf{Eq. 5-43}$$

The following settings are entered:

DCMA OUTPUT H1 SOURCE: "SRC 1 P"
DCMA OUTPUT H1 RANGE: "–1 to 1 mA"
DCMA OUTPUT H1 MIN VAl: "–1.247 pu"
DCMA OUTPUT H1 MAX VAL: "1.247 pu"

With the above settings, the output will represent the power with the scale of 1 mA per 20.65 MW. The worst-case error for this application can be calculated by superimposing the following two sources of error:

- ±0.5% of the full scale for the analog output module, or $\pm 0.005 \times (1 - (-1)) \times 20.65\ \text{MW} = \pm 0.207\ \text{MW}$
- ±1% of reading error for the active power at power factor of 0.9

For example at the reading of 20 MW, the worst-case error is 0.01 × 20 MW + 0.207 MW = 0.407 MW.

Example: Current monitoring

The phase A current (true RMS value) is to be monitored via the H2 current output working with the range from 4 to 20 mA. The CT ratio is 5000:5 and the maximum load current is 4200 A. The current is to be monitored from 0 A upwards, allowing for 50% overload.

The phase current with the 50% overload margin is:

$$I_{max} = 1.5 \times 4.2\ \text{kA} = 6.3\ \text{kA} \quad \textbf{Eq. 5-44}$$

The base unit for current (see the FlexElements section in this chapter for additional details) is:

$$I_{BASE} = 5\ \text{kA} \quad \textbf{Eq. 5-45}$$

The minimum and maximum power values to be monitored (in pu) are:

$$\text{minimum current} = \frac{0\ \text{kA}}{5\ \text{kA}} = 0\ \text{pu}, \quad \text{maximum current} = \frac{6.3\ \text{kA}}{5\ \text{kA}} = 1.26\ \text{pu} \quad \textbf{Eq. 5-46}$$

The following settings are entered:

DCMA OUTPUT H2 SOURCE: "SRC 1 Ia RMS"
DCMA OUTPUT H2 RANGE: "4 to 20 mA"
DCMA OUTPUT H2 MIN VAL: "0.000 pu"
DCMA OUTPUT H2 MAX VAL: "1.260 pu"

The worst-case error for this application can be calculated by superimposing the following two sources of error:

- ±0.5% of the full scale for the analog output module, or $\pm 0.005 \times (20 - 4) \times 6.3 \text{ kA} = \pm 0.504 \text{ kA}$
- ±0.25% of reading or ±0.1% of rated (whichever is greater) for currents between 0.1 and 2.0 of nominal

For example, at the reading of 4.2 kA, the worst-case error is max(0.0025 × 4.2 kA, 0.001 × 5 kA) + 0.504 kA = 0.515 kA.

Example: Voltage monitoring

A positive-sequence voltage on a 400 kV system measured via source 2 is to be monitored by the DCmA H3 output with a range of 0 to 1 mA. The VT secondary setting is 66.4 V, the VT ratio setting is 6024, and the VT connection setting is "Delta." The voltage is to be monitored in the range from 70% to 110% of nominal.

The minimum and maximum positive-sequence voltages to be monitored are:

$$V_{min} = 0.7 \times \frac{400 \text{ kV}}{\sqrt{3}} = 161.66 \text{ kV}, \quad V_{max} = 1.1 \times \frac{400 \text{ kV}}{\sqrt{3}} = 254.03 \text{ kV} \qquad \textbf{Eq. 5-47}$$

The base unit for voltage (see the FlexElements section in this chapter for additional details) is:

$$V_{BASE} = 0.0664 \text{ kV} \times 6024 = 400 \text{ kV} \qquad \textbf{Eq. 5-48}$$

The minimum and maximum voltage values to be monitored (in pu) are:

$$\text{minimum voltage} = \frac{161.66 \text{ kV}}{400 \text{ kV}} = 0.404 \text{ pu}, \quad \text{maximum voltage} = \frac{254.03 \text{ kV}}{400 \text{ kV}} = 0.635 \text{ pu} \qquad \textbf{Eq. 5-49}$$

The following settings are entered:

DCMA OUTPUT H3 SOURCE: "SRC 2 V_1 mag"
DCMA OUTPUT H3 RANGE: "0 to 1 mA"
DCMA OUTPUT H3 MIN VAL: "0.404 pu"
DCMA OUTPUT H3 MAX VAL: "0.635 pu"

The limit settings differ from the expected 0.7 pu and 1.1 pu because the relay calculates the positive-sequence quantities scaled to the phase-to-ground voltages, even if the VTs are connected in "Delta" (see the Metering Conventions section in chapter 6), while at the same time the VT nominal voltage is 1 pu for the settings. Consequently the settings required in this example differ from naturally expected by the factor of $\sqrt{3}$.

The worst-case error for this application could be calculated by superimposing the following two sources of error:

- ±0.5% of the full scale for the analog output module, or $\pm 0.005 \times (1 - 0) \times 254.03 \text{ kV} = \pm 1.27 \text{ kV}$
- ±0.5% of reading

For example, under nominal conditions, the positive-sequence reads 230.94 kV and the worst-case error is 0.005 × 230.94 kV + 1.27 kV = 2.42 kV.

5.12 Testing

5.12.1 Test mode function

SETTINGS ⇨⇩ TESTING ⇨ TEST MODE FUNCTION

■ TESTING ■	⇔	TEST MODE FUNCTION: Disabled	Range: Disabled, Test-Blocked, Test

The F60 provides a test facility to verify the functionality of contact inputs and outputs, some communication functions and the phasor measurement unit (where applicable), using simulated conditions. It is accessible in the software.

The test mode can be in any of three states: Disabled, Test-Blocked, or Test.

The Disabled mode is intended for normal in service operation; relay protection, control and communication function is normal. Test features are disabled, except channel tests and phasor measurement unit tests remain usable when provided.

The Test-Blocked mode is intended to allow the relay to be quickly placed in a state where the relay cannot negatively impact the power system or other parts of the substation automation system. This is to allow changing settings, loading new firmware, changing hardware modules, and changing communication connections. As far as practical all relay output signals are blocked. Contact outputs are de-energized, latching outputs are frozen. Commands to HardFiber Bricks are blocked. GOOSE transmissions have their "simulation" flag (also known as "test" flag) set, which results in the messages not being accepted by compliant receiving devices that do not have a "Sim" data attribute set. The quality attribute of values that can be output via IEC 61850 MMS services are set to "invalid," which results in the values not being used for operational purposes by compliant receiving devices. Direct I/O channel tests and PMU tests are usable on applicable models.

The Test mode is intended for testing involving forcing relay operation by test signal injection and verifying correct relay output. This mode is also for tests to verify the relay outputs (both contact and communications) have the intended impact on specific power system devices or on specific other substation automation devices. Contact outputs can be selectively enabled or forced as described in the following two sections. Shared outputs to Bricks have their test mode flag raised, which results in their value only being accepted by relays also in forcible/test mode. GOOSE transmissions have the "simulation" flag set, which results in these only being accepted by other devices that have their "Sim" data attribute set. The "Sim" data attribute in the relay is set, so that if GOOSE messages are received with the "simulation" flag set, these are used in place of the normal messages. The quality attribute of values that are output via IEC 61850 MMS services are set to "valid" + "test," which signals that the values are not to be used for operational purposes.

Otherwise, the UR remains fully operational while in Test mode, allowing for various testing procedures. In particular, the protection and control elements, and FlexLogic function normally. Other than the IEC 61850 protocol, communications based inputs and outputs remain fully operational. The test procedure must take this into account. Direct I/O channel tests and PMU tests are usable on applicable models.

The test mode can be selected either through the front panel, through EnerVista UR Setup, or through IEC 61850 control to LLN0.Mod. LLN0.Mod.ctlVal "on" selects Disabled, "test/blocked" selects Test-Blocked, and "test" selects Test. The **TEST MODE FUNCTION** setting can only be changed by a direct user command. Following a restart, power up, settings upload, or firmware upgrade, the test mode remains at the last programmed value. This allows a UR that has been placed in test-blocked mode to remain isolated during testing and maintenance activities.

5.12.2 Test mode forcing

SETTINGS ⇨⇩ TESTING ⇨ TEST MODE FORCING

■ TESTING ■	⇔	TEST MODE FORCING: On	Range: FlexLogic operand

When in Test mode, the operand selected by the **TEST MODE FORCING** setting dictates further response of the UR to testing conditions, as described in the following two sections.

The test mode state is indicated on the relay faceplate by a combination of the Test Mode LED indicator, the In-Service LED indicator, and by the critical fail relay, as shown in the following table.

Table 5-45: Test mode operation

TEST MODE FUNCTION	In-service LED	Test mode LED	Critical fail relay	TEST MODE FORCING	Contact input and output behavior
Disabled	Unaffected	Off	Normal	No effect	Normal
Test-Blocked	Off	On	De-energized	No effect	Contact outputs disabled
Test	Off	Flashing	De-energized	Off	Normal
				On	Controlled by forcing features

NOTE

On restart, the **TEST MODE FORCING** setting and the force contact input and force contact output settings revert to their default states.

5.12.3 Force contact inputs

SETTINGS ⇨⇩ TESTING ⇨⇩ FORCE CONTACT INPUTS

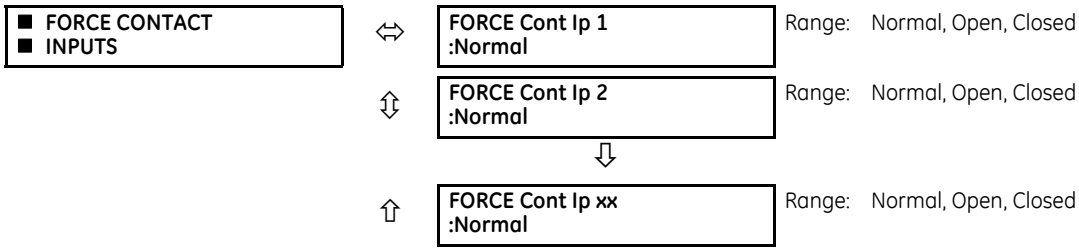

The force contact inputs feature provides a method of performing checks on the function of all contact inputs.

While in Test mode, the relay contact inputs can be pre-programmed to respond in the following ways:

- If set to "Normal," the input remains fully operational. It is controlled by the voltage across its input terminals and can be turned on and off by external circuitry. Select this value if a given input must be operational during the test. This includes, for example, an input initiating the test, or being a part of a user pre-programmed test sequence.
- If set to "Open," the input is forced to report as opened (Logic 0) while the operand selected by **TEST MODE FORCING** setting is On, regardless of the voltage across the input terminals. While the selected operand is Off, the input behaves as it does when in service.
- If set to "Closed," the input is forced to report as closed (Logic 1) while the operand selected by **TEST MODE FORCING** setting is On regardless of the voltage across the input terminals. While the selected operand is Off, the input behaves as it does when in service.

NOTE

On restart, the **TEST MODE FORCING** setting and the force contact input and force contact output settings revert to their default states.

5.12.4 Force contact outputs

SETTINGS ⇨⇩ TESTING ⇨⇩ FORCE CONTACT OUTPUTS

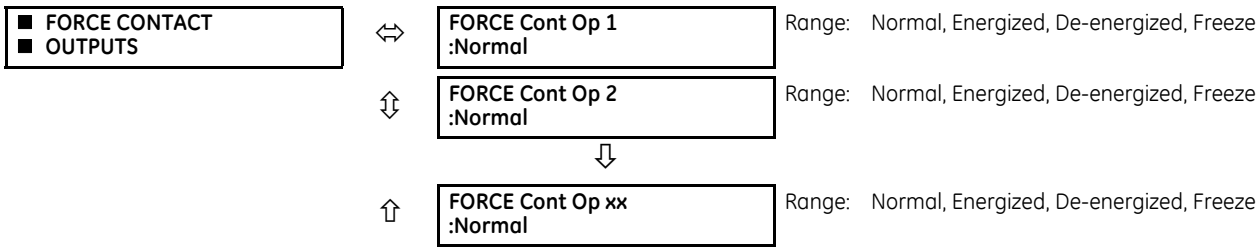

The force contact outputs feature provides a method of performing checks on the function of all contact outputs.

While in Test mode, the relay contact outputs can be pre-programmed to respond in the following ways:

- If set to "Normal," the contact output remains fully operational. It operates when its control operand is logic 1 and resets when its control operand is logic 0.
- If set to "Energized," the output closes and remains closed while the operand selected by the **TEST MODE FORCING** setting is On, regardless of the status of the operand configured to control the output contact. While the selected operand is Off, the output behaves as it does when in service.

- If set to "De-energized," the output opens and remains opened while the operand selected by the **TEST MODE FORCING** setting is On, regardless of the status of the operand configured to control the output contact. While the selected operand is Off, the output behaves as it does when in service.
- If set to "Freeze," the output retains its position at the instant before the **TEST MODE FUNCTION** was Test and the operand selected by the **TEST MODE FORCING** setting was On, regardless of later changes in the status of the operand configured to control the output contact. While the selected operand is Off, the output behaves as it does when in service.

NOTE

On restart, the **TEST MODE FORCING** setting and the force contact input and force contact output settings revert to their default states.

5.12.5 Phasor Measurement Unit test values

SETTINGS ⇨⇩ TESTING ⇨⇩ PMU TEST VALUES ⇨ PMU 1 TEST VALUES

■ PMU 1 ■ TEST VALUES	⇔	PMU 1 TEST FUNCTION: Disabled	Range: Enabled, Disabled
	⇕	PMU 1 VA TEST MAGNITUDE: 500.00 kV	Range: 0.00 to 700.00 kV in steps of 0.01
	⇕	PMU 1 VA TEST ANGLE: 0.00°	Range: –180.00 to 180.00° in steps of 0.05
	⇕	PMU 1 VB TEST MAGNITUDE: 500.00 kV	Range: 0.00 to 700.00 kV in steps of 0.01
	⇕	PMU 1 VB TEST ANGLE: –120.00°	Range: –180.00 to 180.00° in steps of 0.05
	⇕	PMU 1 VC TEST MAGNITUDE: 500.00 kV	Range: 0.00 to 700.00 kV in steps of 0.01
	⇕	PMU 1 VC TEST ANGLE: 120.00°	Range: –180.00 to 180.00° in steps of 0.05
	⇕	PMU 1 VX TEST MAGNITUDE: 500.00 kV	Range: 0.00 to 700.00 kV in steps of 0.01
	⇕	PMU 1 VX TEST ANGLE: 0.00°	Range: –180.00 to 180.00° in steps of 0.05
	⇕	PMU 1 IA TEST MAGNITUDE: 1.000 kA	Range: 0.000 to 9.999 kA in steps of 0.001
	⇕	PMU 1 IA TEST ANGLE: –10.00°	Range: –180.00 to 180.00° in steps of 0.05
	⇕	PMU 1 IB TEST MAGNITUDE: 1.000 kA	Range: 0.000 to 9.999 kA in steps of 0.001
	⇕	PMU 1 IB TEST ANGLE: –130.00°	Range: –180.00 to 180.00° in steps of 0.05
	⇕	PMU 1 IC TEST MAGNITUDE: 1.000 kA	Range: 0.000 to 9.999 kA in steps of 0.001
	⇕	PMU 1 IC TEST ANGLE: 110.00°	Range: –180.00 to 180.00° in steps of 0.05
	⇕	PMU 1 IG TEST MAGNITUDE: 0.000 kA	Range: 0.000 to 9.999 kA in steps of 0.001
	⇕	PMU 1 IG TEST ANGLE: 0.00°	Range: –180.00 to 180.00° in steps of 0.05

⇳ **PMU 1 TEST FREQUENCY: 60.000 Hz** Range: 20.000 to 60.000 Hz in steps of 0.001

⇧ **PMU 1 TEST df/dt: 0.000 Hz/s** Range: –10.000 to 10.000 Hz/s in steps of 0.001

The relay must be in test mode to use the PMU test mode. That is, the **TESTING ⇨ TEST MODE FUNCTION** setting must be "Enabled," and the **TESTING ⇨⇩ TEST MODE INITIATE** initiating signal must be "On."

During the PMU test mode, the physical channels (VA, VB, VC, VX, IA, IB, IC, and IG), frequency, and rate of change of frequency are substituted with user values, while the symmetrical components are calculated from the physical channels. The test values are not explicitly marked in the outgoing data frames. When required, it is recommended to use the user-programmable digital channels to signal the IEEE C37.118 client that test values are being sent in place of the real measurements.

The UR Synchrophasor Implementation defines a test mode that sends a pre-defined set of synchrophasors out over the communication channel when the test mode function setting is enabled. In test mode, the following actions take place:

- The Data Invalid / Test Mode bit (bit 15 in the STAT word) is set
- The Sim bit in all output datasets is set

F60 Feeder Protection System

Chapter 6: Actual values

This chapter outlines viewing of data on the front panel and in the software.

6.1 Actual Values menu

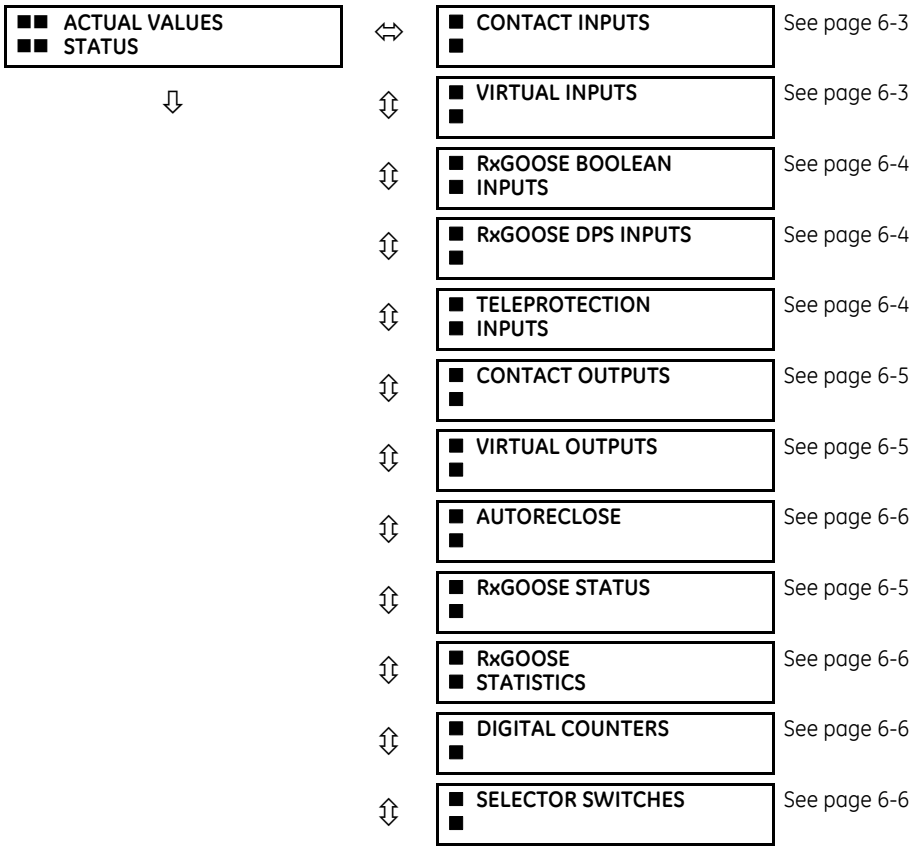

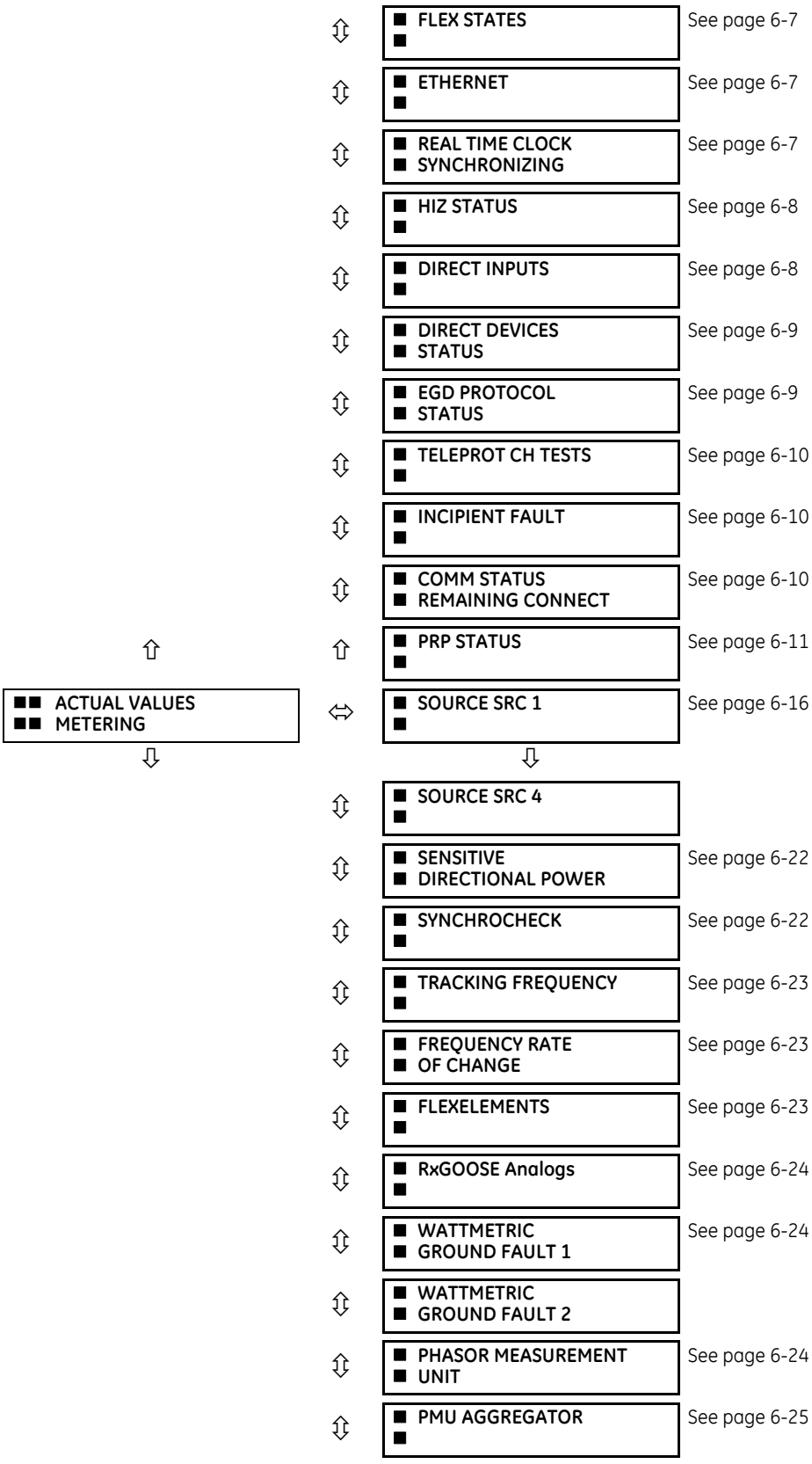
ACTUAL VALUES
METERING
FLEX STATES
ETHERNET
REAL TIME CLOCK
SYNCHRONIZING
HIZ STATUS
DIRECT INPUTS
DIRECT DEVICES
STATUS
EGD PROTOCOL
STATUS
TELEPROT CH TESTS
INCIPIENT FAULT
COMM STATUS
REMAINING CONNECT
PRP STATUS
SOURCE SRC 1
SOURCE SRC 4
SENSITIVE
DIRECTIONAL POWER
SYNCHROCHECK
TRACKING FREQUENCY
FREQUENCY RATE
OF CHANGE
FLEXELEMENTS
RxGOOSE Analogs
WATTMETRIC
GROUND FAULT 1
WATTMETRIC
GROUND FAULT 2
PHASOR MEASUREMENT
UNIT
PMU AGGREGATOR
See page 6-7
See page 6-7
See page 6-7
See page 6-8
See page 6-8
See page 6-9
See page 6-9
See page 6-10
See page 6-10
See page 6-10
See page 6-11
See page 6-16
See page 6-22
See page 6-22
See page 6-23
See page 6-23
See page 6-23
See page 6-24
See page 6-24
See page 6-24
See page 6-25

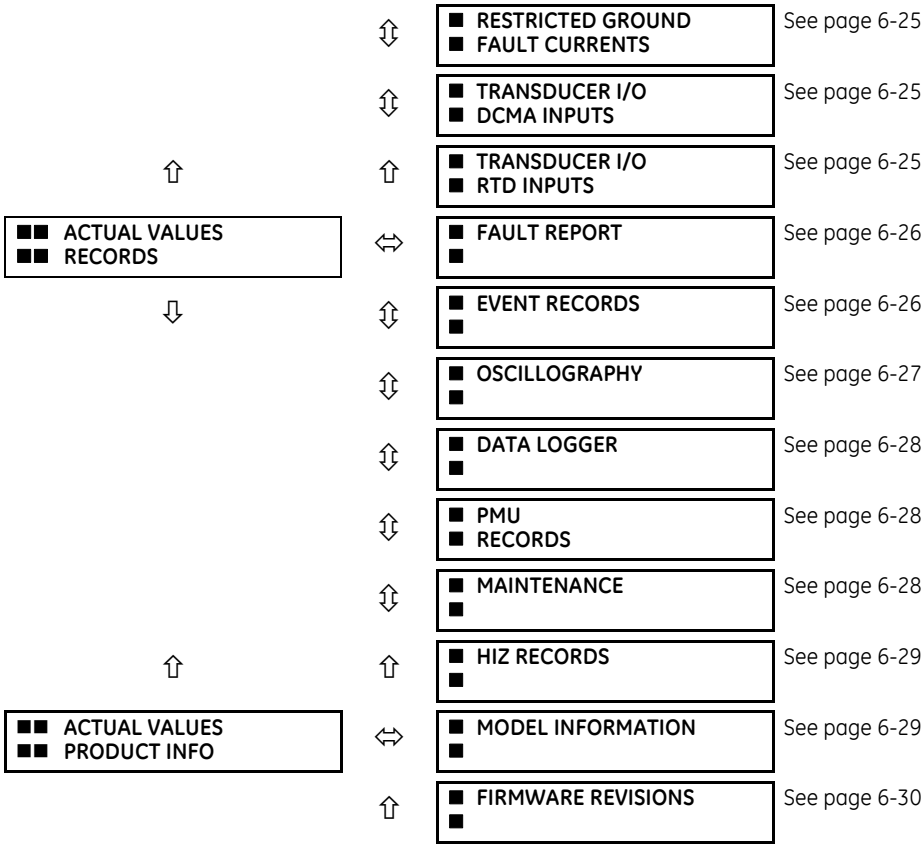

For status reporting, 'On' represents Logic 1 and 'Off' represents Logic 0.

6.2 Status

6.2.1 Contact inputs

ACTUAL VALUES ⇨ STATUS ⇨ CONTACT INPUTS

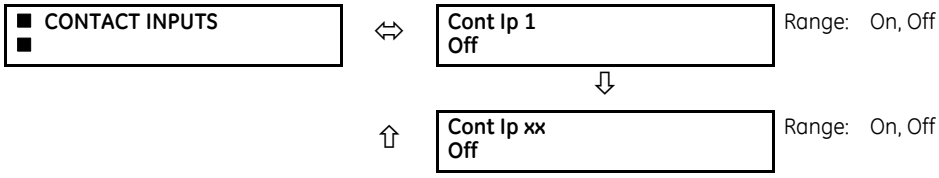

The present status of the contact inputs is shown here. The first line of a message display indicates the ID of the contact input. For example, 'Cont Ip 1' refers to the contact input in terms of the default name-array index. The second line of the display indicates the logic state of the contact input.

6.2.2 Virtual inputs

ACTUAL VALUES ⇨ STATUS ⇨⇩ VIRTUAL INPUTS

⇧ **Virt Ip 64**
Off
Range: On, Off

The present status of the 64 virtual inputs is shown here. The first line of a message display indicates the ID of the virtual input. For example, 'Virt Ip 1' refers to the virtual input in terms of the default name. The second line of the display indicates the logic state of the virtual input.

6.2.3 RxGOOSE boolean inputs

ACTUAL VALUES ⇨ STATUS ⇨⇩ RxGOOSE BOOLEANS

■ **RxGOOSE BOOLEANS**
■

⇔ **RxGOOSE BOOLEAN 1** Range: On, Off

⇩

⇧ **RxGOOSE BOOLEAN 128** Range: On, Off

The F60 is provided with optional IEC 61850 capability. This feature is specified as a software option at the time of ordering. See the Order Codes section of chapter 2 for details.

6.2.4 RxGOOSE DPS inputs

ACTUAL VALUES ⇨ STATUS ⇨⇩ RxGOOSE DPS

■ **RxGOOSE DPS**
■

⇔ **RxGOOSE DPS 1**
Status: intermediate Range: On, Off, Intermediate, Bad

⇩

⇧ **RxGOOSE DPS 5**
Status: intermediate Range: On, Off, Intermediate, Bad

The F60 is provided with optional IEC 61850 capability. This feature is specified as a software option at the time of ordering. See the Order Codes section of chapter 2 for details.

6.2.5 Teleprotection inputs

ACTUAL VALUES ⇨ STATUS ⇨⇩ TELEPROTECTION INPUTS

■ **TELEPROTECTION**
■ **INPUTS**

⇔ **TELEPROTECTION**
INPUT 1-1: Off Range: On, Off

⇩

⇳ **TELEPROTECTION**
INPUT 1-16: Off Range: On, Off

⇳ **TELEPROTECTION**
INPUT 2-1: Off Range: On, Off

⇩

⇧ **TELEPROTECTION**
INPUT 2-16: Off Range: On, Off

The present state of teleprotection inputs from communication channels 1 and 2 are shown here. The state displayed is that of corresponding remote output unless the channel is declared failed.

6.2.6 Contact outputs

ACTUAL VALUES ⇨ STATUS ⇨⇩ CONTACT OUTPUTS

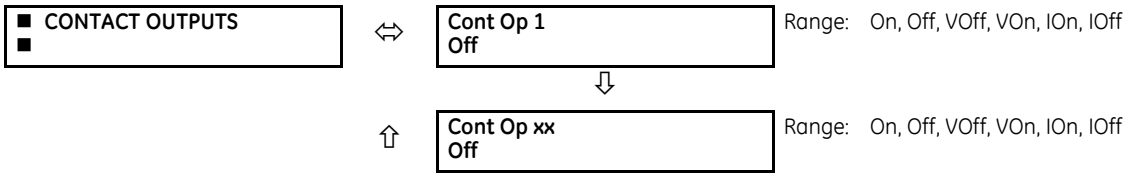

The present state of the contact outputs is shown here. The first line of a message display indicates the ID of the contact output. For example, 'Cont Op 1' refers to the contact output in terms of the default name-array index. The second line of the display indicates the logic state of the contact output.

For form-A contact outputs, the state of the voltage and current detectors is displayed as Off, VOff, IOff, On, IOn, and VOn. For form-C contact outputs, the state is displayed as Off or On.

6.2.7 Virtual outputs

ACTUAL VALUES ⇨ STATUS ⇨⇩ VIRTUAL OUTPUTS

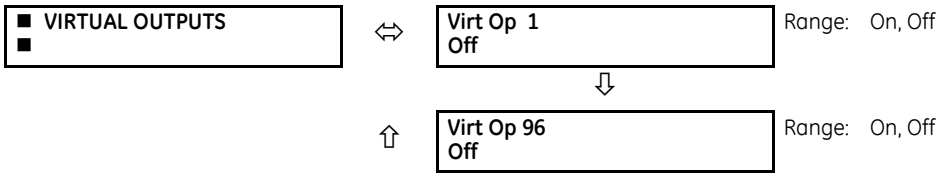

The present state of up to 96 virtual outputs is shown here. The first line of a message display indicates the ID of the virtual output. For example, 'Virt Op 1' refers to the virtual output in terms of the default name-array index. The second line of the display indicates the logic state of the virtual output, as calculated by the FlexLogic equation for that output.

6.2.8 RxGOOSE status

ACTUAL VALUES ⇨ STATUS ⇨⇩ RxGOOSE STATUS

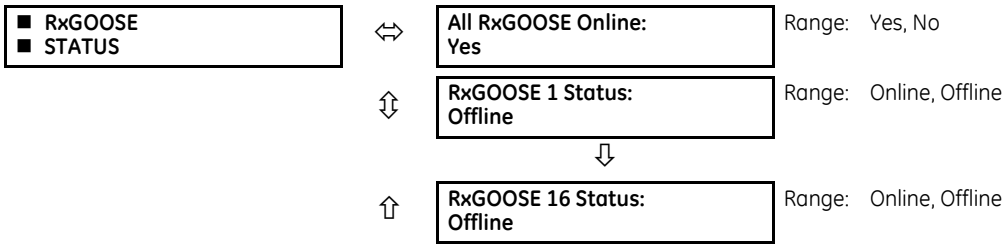

The F60 is provided with optional IEC 61850 capability. This feature is specified as a software option at the time of ordering. See the Order Codes section of chapter 2 for details.

The **All RxGOOSE Online** actual value does not consider RxGOOSE that are not configured or are not used by any RxGOOSE Input.

6.2.9 RxGOOSE statistics

ACTUAL VALUES ⇨ STATUS ⇨⇩ RxGOOSE STATISTICS ⇨⇩ RxGOOSE 1(16)

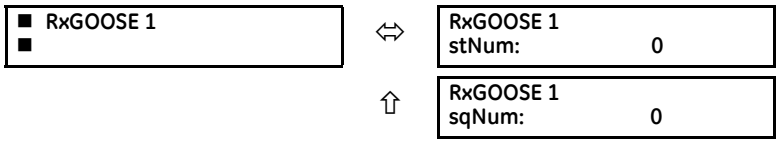

The F60 is provided with optional IEC 61850 capability. This feature is specified as a software option at the time of ordering. See the Order Codes section of chapter 2 for details.

stNum — State number. The most recently received value in GOOSE message field stNum. The publisher increments stNum each time that the state of one or more of the GOOSE message members is sent with a revised value.

sqNum — Sequence number. The most recently received value in GOOSE message field sqNum. The publisher sets sqNum to zero each time the state of one or more of the GOOSE message members is sent with a new value, and it increments it whenever a GOOSE message is resent without any member value change.

6.2.10 Autoreclose

ACTUAL VALUES ⇨ STATUS ⇨⇩ AUTORECLOSE ⇨ AUTORECLOSE 1(2)

Range: 0, 1, 2, 3, 4

This menu displays the reclosure shot count.

6.2.11 Digital counters

ACTUAL VALUES ⇨ STATUS ⇨⇩ DIGITAL COUNTERS ⇨ DIGITAL COUNTERS Counter 1(8)

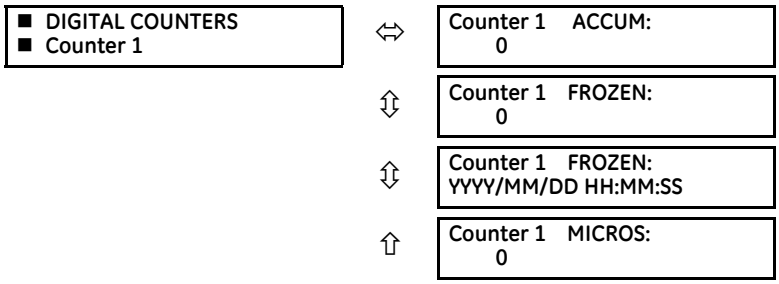

The present status of the eight digital counters displays here. The status of each counter, with the user-defined counter name, includes the accumulated and frozen counts (the count units label also appears). Also included, is the date and time stamp for the frozen count. The **COUNTER 1 MICROS** value refers to the microsecond portion of the time stamp.

6.2.12 Selector switches

ACTUAL VALUES ⇨ STATUS ⇨⇩ SELECTOR SWITCHES

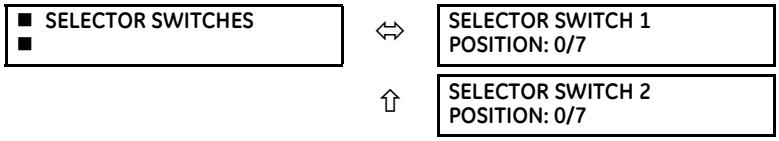

Range: Current Position / 7

Range: Current Position / 7

The display shows both the current position and the full range. The current position only (an integer from 0 through 7) is the actual value.

6.2.13 Flex States

ACTUAL VALUES ⇨ STATUS ⇨⇩ FLEX STATES

■ FLEX STATES ■	⇔	PARAM 1: Off Off — Range: On, Off
	⇧	PARAM 256: Off Off — Range: On, Off

There are 256 FlexState™ bits available. The second line value indicates the state of the given FlexState bit.

6.2.14 Ethernet

ACTUAL VALUES ⇨ STATUS ⇨⇩ ETHERNET

■ ETHERNET ■	⇔	ETHERNET PRI LINK STATUS: Fail — Range: Fail, OK
	⇳	ETHERNET SEC LINK STATUS: Fail — Range: Fail, OK
	⇧	ETHERNET TER LINK STATUS: Fail — Range: Fail, OK

These values indicate the status of the first, second, and third Ethernet links.

6.2.15 Real time clock synchronizing

ACTUAL VALUES ⇨ STATUS ⇨⇩ REAL TIME CLOCK SYNCHRONIZING

■ REAL TIME CLOCK ■ SYNCHRONIZING	⇔	RTC SYNC SOURCE: None — Range: see below
	⇳	GRANDMASTER ID: 0X0000000000000000 — Range: any 8 octet value
	⇳	ACCURACY: 999,999,999 ns — Range: 0 to 999, 999, 999 ns
	⇳	PORT 1 PTP STATE: NO SIGNAL — Range: Disabled, No Signal, Calibrating, Synch'd (No Pdelay), Synchronized
	⇳	PORT 2 PTP STATE: NO SIGNAL — Range: Disabled, No Signal, Calibrating, Synch'd (No Pdelay), Synchronized
	⇳	PORT 3 PTP STATE: NO SIGNAL — Range: Disabled, No Signal, Calibrating, Synch'd (No Pdelay), Synchronized
	⇧	PTP - IRIG-B DELTA: 500,000,000 ns — Range: -500,000,000 to +500,000,000 ns

This item displays when the product includes an IEEE 1588 software option.

RTC SYNC SOURCE actual value is the time synchronizing source the relay is using at present. Possible sources are: Port 1 PTP Clock, Port 2 PTP Clock, Port 3 PTP Clock, IRIG-B, SNTP, and None. An actual value displays when the relay includes the IEEE 1588 software option.

The **GRANDMASTER ID** is the grandmasterIdentity code being received from the present PTP grandmaster, if any. When the relay is not using any PTP grandmaster, this actual value is zero. The grandmasterIdentity code is specified by PTP to be globally unique, so one can always know which clock is grandmaster in a system with multiple grandmaster-capable clocks.

ACCURACY is the estimated maximum time error at present in the RTC, considering the quality information imbedded in the received time signal. The value 999,999,999 indicates that the magnitude of the estimated error is one second or more, or that the error cannot be estimated.

PORT 1...3 PTP STATE is the present state of the port's PTP clock. The PTP clock state is:

- **DISABLED** is the port's function setting is Disabled
- **NO SIGNAL** if enabled but no signal from an active master has been found and selected
- **CALIBRATING** if an active master has been selected but lock is not at present established
- **SYNCH'D (NO PDELAY)** if the port is synchronized, but the peer delay mechanism is non-operational
- **SYNCHRONIZED** if synchronized

PTP - IRIG-B DELTA is the time difference, measured in nanoseconds, between the fractional seconds portion of the time being received via PTP and that being received via IRIG-B. A positive value indicates that PTP time is fast compared to IRIG-B time.

6.2.16 Hi-Z status

ACTUAL VALUES ⇨ STATUS ⇨⇩ HIZ STATUS

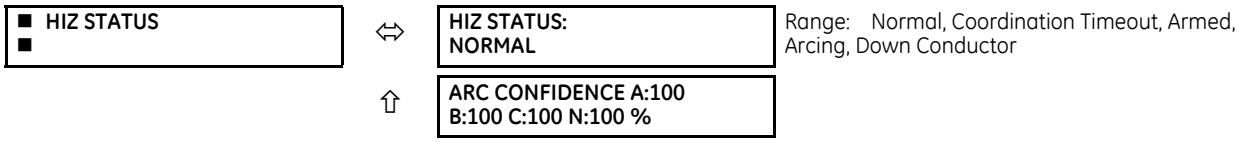

The current status of high-impedance fault detection element displayS here. The arc fault detection confidence also displays.

6.2.17 Direct inputs

ACTUAL VALUES ⇨ STATUS ⇨⇩ DIRECT INPUTS

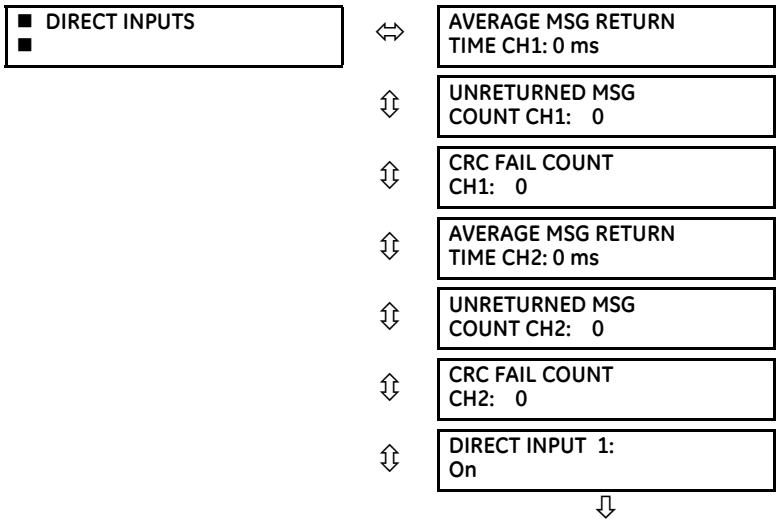

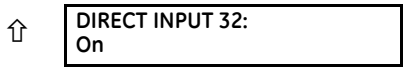

The **AVERAGE MSG RETURN TIME** is the time taken for direct output messages to return to the sender in a direct input/output ring configuration (this value is not applicable for non-ring configurations). This is a rolling average calculated for the last ten messages. There are two return times for dual-channel communications modules.

The **UNRETURNED MSG COUNT** values (one per communications channel) count the direct output messages that do not make the trip around the communications ring. The **CRC FAIL COUNT** values (one per communications channel) count the direct output messages that have been received but fail the CRC check. High values for either of these counts can indicate on a problem with wiring, the communication channel, or one or more relays. The **UNRETURNED MSG COUNT** and **CRC FAIL COUNT** values can be cleared using the **CLEAR DIRECT I/O COUNTERS** command.

The **DIRECT INPUT 1** to **DIRECT INPUT (32)** values represent the state of each direct input.

6.2.18 Direct devices status

ACTUAL VALUES ⇨ STATUS ⇨⇩ DIRECT DEVICES STATUS

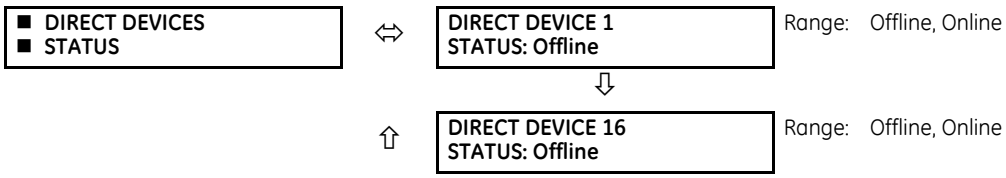

These actual values represent the state of direct devices 1 through 16.

6.2.19 EGD protocol status

6.2.19.1 Fast exchange

ACTUAL VALUES ⇨ STATUS ⇨⇩ EGD PROTOCOL STATUS ⇨ PRODUCER STATUS ⇨ FAST EXCHANGE 1

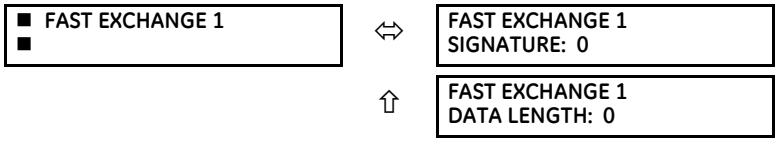

These values provide information for debugging an Ethernet Global Data (EGD) network. The EGD signature and packet size for the fast EGD exchange display.

6.2.19.2 Slow exchange

ACTUAL VALUES ⇨ STATUS ⇨⇩ EGD PROTOCOL STATUS ⇨ PRODUCER STATUS ⇨ SLOW EXCHANGE 1(2)

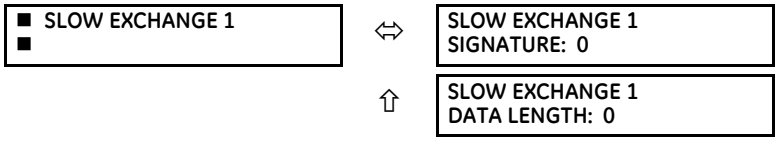

These values provide information for debugging an EGD network. The EGD signature and packet size for the slow EGD exchanges display.

6.2.20 Teleprotection channel tests

ACTUAL VALUES ⇨ STATUS ⇨⇩ TELEPROT CH TESTS

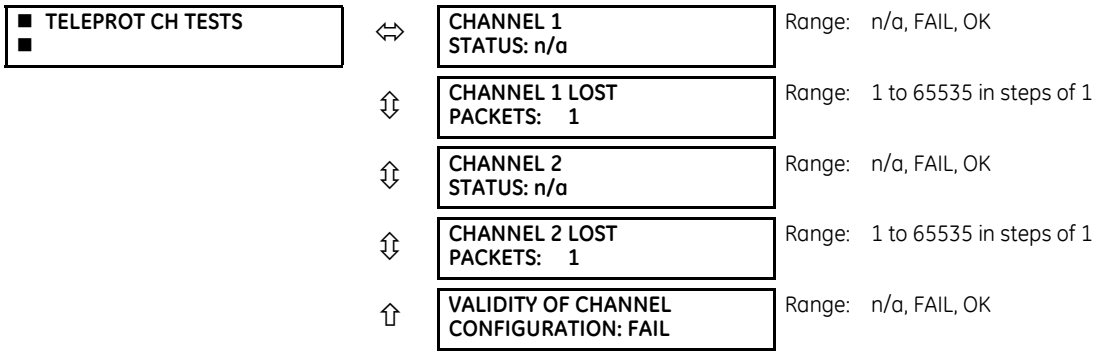

The status information for two channels is shown here.

CHANNEL 1 STATUS — This represents the receiver status of each channel. If the value is "OK," teleprotection is enabled and data is being received from the remote terminal; If the value is "FAIL," teleprotection enabled and data is not being received from the remote terminal. If "n/a," teleprotection is disabled.

CHANNEL 1 LOST PACKETS — Data is transmitted to the remote terminals in data packets at a rate of two packets per cycle. The number of lost packets represents data packets lost in transmission; this count can be reset to 0 through the **COMMANDS ⇨⇩ CLEAR RECORDS** menu.

VALIDITY OF CHANNEL CONFIGURATION — This value displays the current state of the communications channel identification check, and hence validity. If a remote relay ID does not match the programmed ID at the local relay, the "FAIL" message displays. The "N/A" value appears if the local relay ID is set to a default value of "0," the channel is failed, or if the teleprotection inputs/outputs are not enabled.

6.2.21 Incipient fault detector

ACTUAL VALUES ⇨ STATUS ⇨⇩ INCIPIENT FAULT ⇨ INCIPIENT FAULT 1(2)

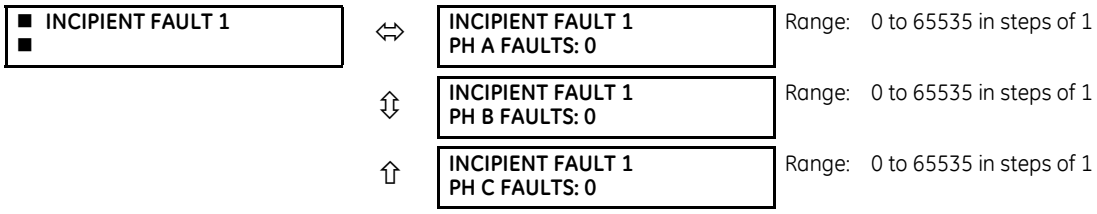

The number of detected incipient faults for each incipient fault element are displayed here for each phase. These values can be reset to zero with the **COMMANDS ⇨⇩ CLEAR RECORDS ⇨⇩ CLEAR INCIPENT FAULT COUNTERS** command.

6.2.22 Remaining connection status

ACTUAL VALUES ⇨ STATUS ⇨⇩ COMM STATUS REMAINING CONNECT

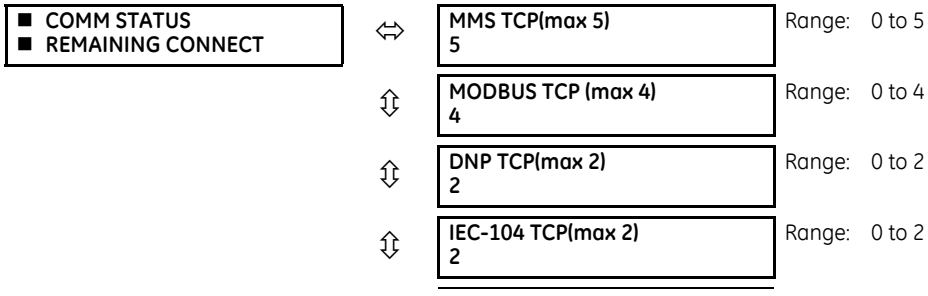

⇳	**PMU TCP** **1**	Range: 1 to 4
⇧	**SFTP (max 4)** **4**	Range: 0 to 4

These values specify the remaining number of TCP connections still available for each protocol. The display depends on the options applicable to your device. Each time a connection is used, the remaining number of connections decrements. When released, the remaining number of connections increments. If no connection is made over the specific protocol, the number equals the maximum number available for the specific protocol.

For example, the maximum number of Modbus TCP connections is 4. Once an EnerVista session is opened on a computer connected to the UR over Ethernet, the Modbus TCP status shows 3. If the EnerVista application is closed, the Modbus TCP status shows 4.

MMS TCP — The number of IEC 61850 connections remaining.

PMU TCP — The maximum number of PMU TCP connections matches the number of aggregators. The maximum number of aggregators for the N60 is 4. The maximum number for the C60 is 2. The maximum number is 1 for other products with a PMU. The remaining number of aggregators displays here.

6.2.23 Parallel Redundancy Protocol (PRP)

The Parallel Redundancy Protocol (PRP) defines a redundancy protocol for high availability in substation automation networks.

ACTUAL VALUES ⇨ STATUS ⇨⇳ PRP

■ **PRP STATUS** ■	⇔	**Total Rx Port A:** **0**	Range: 0 to 4G, blank if PRP disabled
	⇳	**Total Rx Port B:** **0**	Range: 0 to 4G, blank if PRP disabled
	⇳	**Mismatches Port A:** **0**	Range: 0 to 4G, blank if PRP disabled
	⇳	**Mismatches Port B:** **0**	Range: 0 to 4G, blank if PRP disabled
	⇧	**Total Errors:** **0**	Range: 0 to 4G, blank if PRP disabled

The F60 is provided with optional PRP capability. This feature is specified as a software option at the time of ordering. See the Order Codes section in chapter 2 for details.

Total Received Port A is a counter for total messages received (either from DANPs or from SANs) on Port A.

Total Received Port B is a counter for total messages received (either from DANPs or from SANs) on Port B.

Total Errors is a counter for total messages received with an error (bad port code, frame length too short).

Mismatches Port A is a counter for total messages received with an error on Port A (PRP frame, but port received through and LAN ID in the frame do not match).

Mismatches Port B is a counter for total messages received with an error on Port B (PRP frame, but port received through and LAN ID in the frame do not match).

6.3 Metering

6.3.1 Metering conventions

6.3.1.1 UR convention for measuring power and energy

The figure illustrates the conventions established for use in UR devices.

Figure 6-1: Flow direction of signed values for watts and VARs

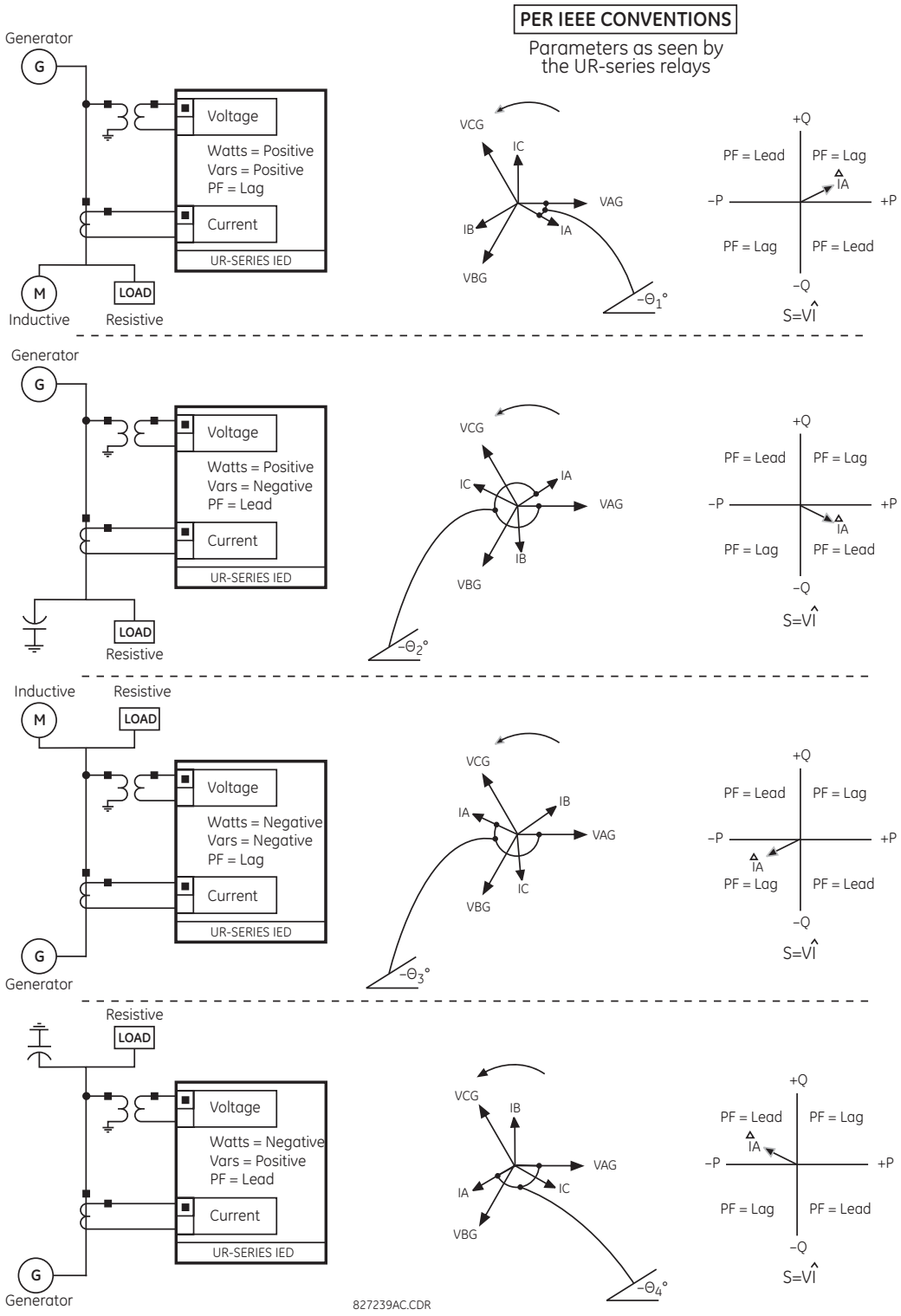

6.3.1.2 UR convention for measuring phase angles

All phasors calculated by URs and used for protection, control and metering functions are rotating phasors that maintain the correct phase angle relationships with each other at all times.

For display and oscillography purposes, all phasor angles in a given relay are referred to an AC input channel pre-selected by the **SETTINGS ⇨⇩ SYSTEM SETUP ⇨⇩ POWER SYSTEM ⇨⇩ FREQUENCY AND PHASE REFERENCE** setting. This setting defines a particular AC signal source to be used as the reference.

The relay first determines if any "Phase VT" bank is indicated in the source. If it is, voltage channel VA of that bank is used as the angle reference. Otherwise, the relay determines if any "Aux VT" bank is indicated; if it is, the auxiliary voltage channel of that bank is used as the angle reference. If neither of the two conditions is satisfied, then two more steps of this hierarchical procedure to determine the reference signal include "Phase CT" bank and "Ground CT" bank.

If the AC signal pre-selected by the relay upon configuration is not measurable, the phase angles are not referenced. The phase angles are assigned as positive in the leading direction, and are presented as negative in the lagging direction, to more closely align with power system metering conventions. The figure illustrates this.

Figure 6-2: UR phase angle measurement convention

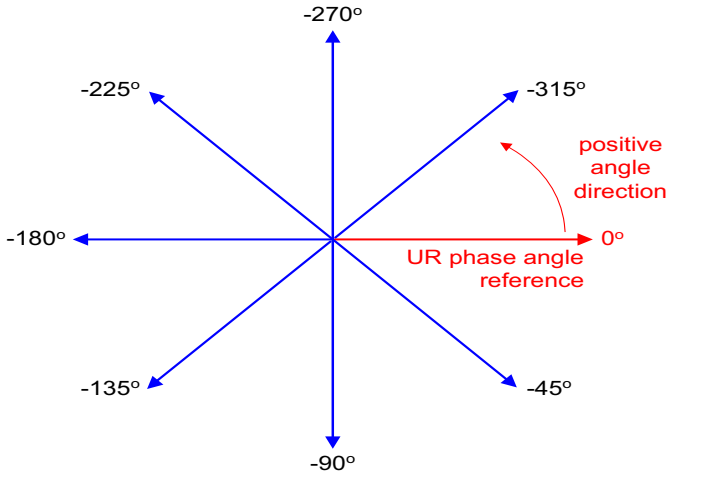

6

6.3.1.3 UR convention for symmetrical components

The URs calculate voltage symmetrical components for the power system phase A line-to-neutral voltage, and symmetrical components of the currents for the power system phase A current. Owing to the above definition, phase angle relations between the symmetrical currents and voltages stay the same irrespective of the connection of instrument transformers. This is important for setting directional protection elements that use symmetrical voltages.

For display and oscillography purposes the phase angles of symmetrical components are referenced to a common reference as described in the previous sub-section.

WYE-connected instrument transformers

- ABC phase rotation:

$$V\_0 = \frac{1}{3}(V_{AG} + V_{BG} + V_{CG})$$

$$V\_1 = \frac{1}{3}(V_{AG} + aV_{BG} + a^2V_{CG})$$

$$V\_2 = \frac{1}{3}(V_{AG} + a^2V_{BG} + aV_{CG})$$

- ACB phase rotation:

$$V\_0 = \frac{1}{3}(V_{AG} + V_{BG} + V_{CG})$$

$$V\_1 = \frac{1}{3}(V_{AG} + a^2V_{BG} + aV_{CG})$$

$$V\_2 = \frac{1}{3}(V_{AG} + aV_{BG} + a^2V_{CG})$$

The above equations apply to currents as well.

DELTA-connected instrument transformers

- ABC phase rotation:

$$V\_0 = N/A$$
$$V\_1 = \frac{1\angle -30°}{3\sqrt{3}}(V_{AB} + aV_{BC} + a^2V_{CA})$$
$$V\_2 = \frac{1\angle 30°}{3\sqrt{3}}(V_{AB} + a^2V_{BC} + aV_{CA})$$

- ACB phase rotation:

$$V\_0 = N/A$$
$$V\_1 = \frac{1\angle 30°}{3\sqrt{3}}(V_{AB} + a^2V_{BC} + aV_{CA})$$
$$V\_2 = \frac{1\angle -30°}{3\sqrt{3}}(V_{AB} + aV_{BC} + a^2V_{CA})$$

The zero-sequence voltage is not measurable under the Delta connection of instrument transformers and is defaulted to zero. The table below shows an example of symmetrical components calculations for the ABC phase rotation.

Table 6-1: Symmetrical components calculation example

SYSTEM VOLTAGES, sec. V *						VT conn.	relay INPUTS, sec. V			SYMM. COMP, sec. V		
V_{AG}	V_{BG}	V_{CG}	V_{AB}	V_{BC}	V_{CA}		F5ac	F6ac	F7ac	V_0	V_1	V_2
13.9 ∠0°	76.2 ∠–125°	79.7 ∠–250°	84.9 ∠–313°	138.3 ∠–97°	85.4 ∠–241°	WYE	13.9 ∠0°	76.2 ∠–125°	79.7 ∠–250°	19.5 ∠–192°	56.5 ∠–7°	23.3 ∠–187°
UNKNOWN (only V_1 and V_2 can be determined)			84.9 ∠0°	138.3 ∠–144°	85.4 ∠–288°	DELTA	84.9 ∠0°	138.3 ∠–144°	85.4 ∠–288°	N/A	56.5 ∠–54°	23.3 ∠–234°

* The power system voltages are phase-referenced – for simplicity – to V_{AG} and V_{AB}, respectively. This, however, is a relative matter. It is important to remember that the F60 displays are always referenced as specified under **SETTINGS ⇨⇩ SYSTEM SETUP ⇨⇩ POWER SYSTEM ⇨⇩ FREQUENCY AND PHASE REFERENCE**.

The example above is illustrated in the following figure.

Figure 6-3: Measurement convention for symmetrical components

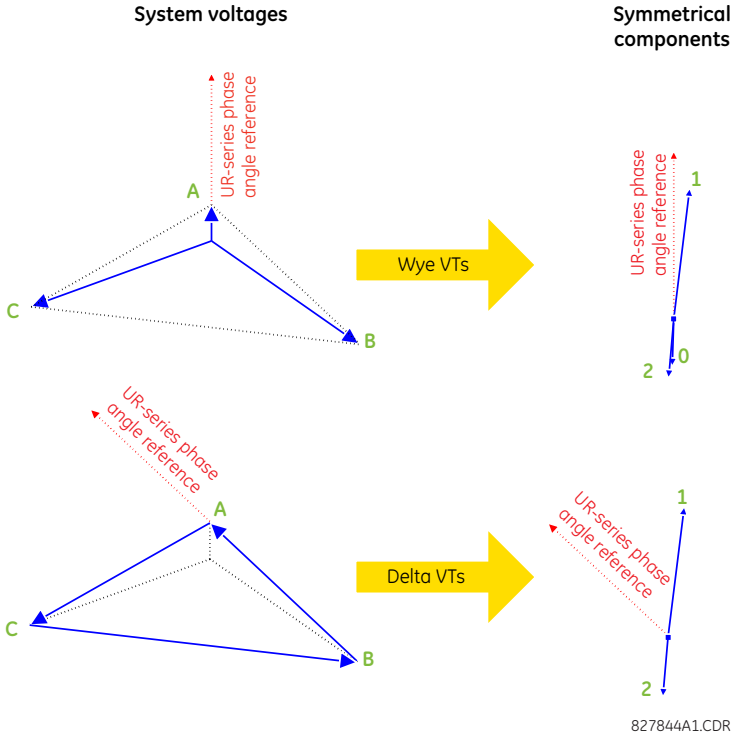

6.3.2 Sources

6.3.2.1 Menu

ACTUAL VALUES ⇨⇩ METERING ⇨⇩ SOURCE SRC 1

■ SOURCE SRC 1 ■	⇔	■ PHASE CURRENT ■ SRC 1 — See below
	⇩	■ GROUND CURRENT ■ SRC 1 — See page 6-17
	⇩	■ PHASE VOLTAGE ■ SRC 1 — See page 6-17
	⇩	■ AUXILIARY VOLTAGE ■ SRC 1 — See page 6-18
	⇩	■ POWER ■ SRC 1 — See page 6-18
	⇩	■ ENERGY ■ SRC 1 — See page 6-19
	⇩	■ DEMAND ■ SRC 1 — See page 6-19
	⇩	■ FREQUENCY ■ SRC 1 — See page 6-20
	⇩	■ CURRENT HARMONICS ■ SRC 1 — See page 6-21
	⇧	■ VOLTAGE HARMONICS ■ SRC 1 — See page 6-21

This menu displays the metered values available for each source.

Metered values presented for each source depend on the phase and auxiliary VTs and phase and ground CTs assignments for this particular source. For example, if no phase VT is assigned to this source, then any voltage, energy, and power values are unavailable.

6.3.2.2 Phase current metering

ACTUAL VALUES ⇨⇩ METERING ⇨ SOURCE SRC 1 ⇨ PHASE CURRENT

■ PHASE CURRENT ■ SRC 1	⇔	SRC 1 RMS Ia: 0.000 b: 0.000 c: 0.000 A
	⇩	SRC 1 RMS Ia: 0.000 A
	⇩	SRC 1 RMS Ib: 0.000 A
	⇩	SRC 1 RMS Ic: 0.000 A
	⇩	SRC 1 RMS In: 0.000 A
	⇩	SRC 1 PHASOR Ia: 0.000 A 0.0°
	⇩	SRC 1 PHASOR Ib: 0.000 A 0.0°
	⇩	SRC 1 PHASOR Ic: 0.000 A 0.0°

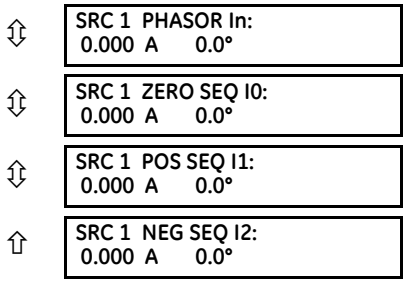

The metered phase current values are displayed in this menu. The "SRC 1" text gets replaced by whatever name was programmed by the user for the associated source (see **SETTINGS ⇨⇩ SYSTEM SETUP ⇨⇩ SIGNAL SOURCES**).

6.3.2.3 Ground current metering

ACTUAL VALUES ⇨⇩ METERING ⇨ SOURCE SRC 1 ⇨ GROUND CURRENT

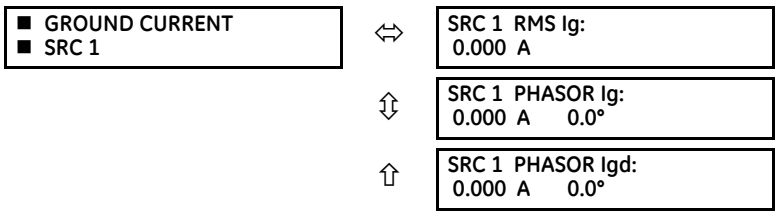

The metered ground current values are displayed in this menu. The "SRC 1" text is replaced by the name programmed by the user for the associated source (see **SETTINGS ⇨⇩ SYSTEM SETUP ⇨⇩ SIGNAL SOURCES**).

6.3.2.4 Phase voltage metering

ACTUAL VALUES ⇨⇩ METERING ⇨ SOURCE SRC 1 ⇨ PHASE VOLTAGE

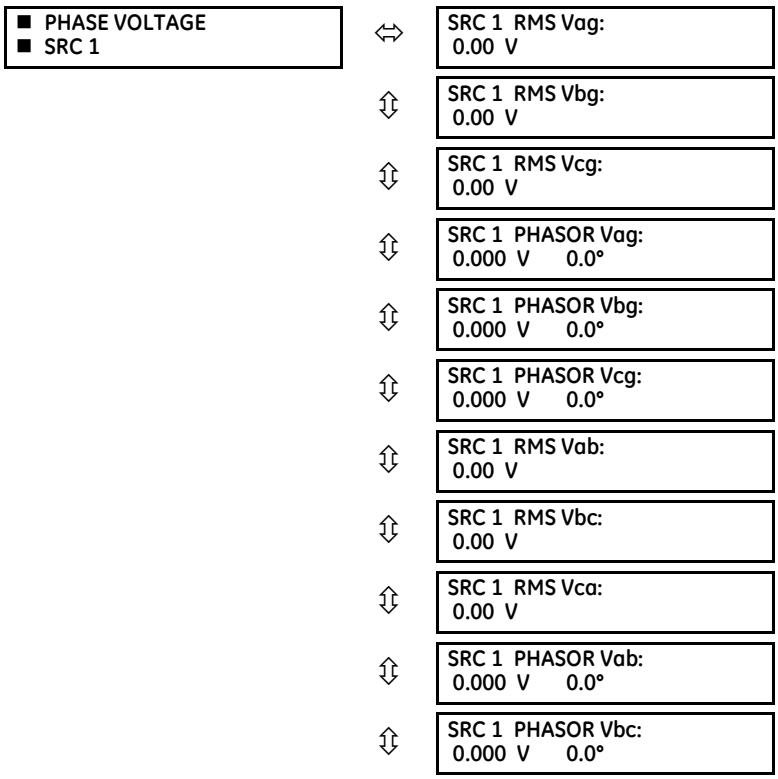

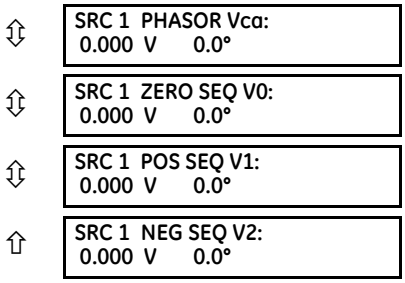

The metered phase voltage values are displayed in this menu. The "SRC 1" text is replaced by the name programmed by the user for the associated source (see **SETTINGS ⇨⇩ SYSTEM SETUP ⇨⇩ SIGNAL SOURCES**).

6.3.2.5 Auxiliary voltage metering

ACTUAL VALUES ⇨⇩ METERING ⇨ SOURCE SRC 1 ⇨⇩ AUXILIARY VOLTAGE

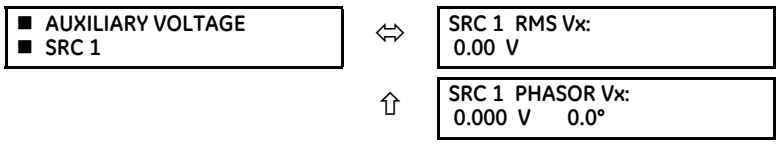

The metered auxiliary voltage values are displayed in this menu. The "SRC 1" text is replaced by the name programmed by the user for the associated source (see **SETTINGS ⇨⇩ SYSTEM SETUP ⇨⇩ SIGNAL SOURCES**).

6.3.2.6 Power metering

ACTUAL VALUES ⇨⇩ METERING ⇨ SOURCE SRC 1 ⇨⇩ POWER

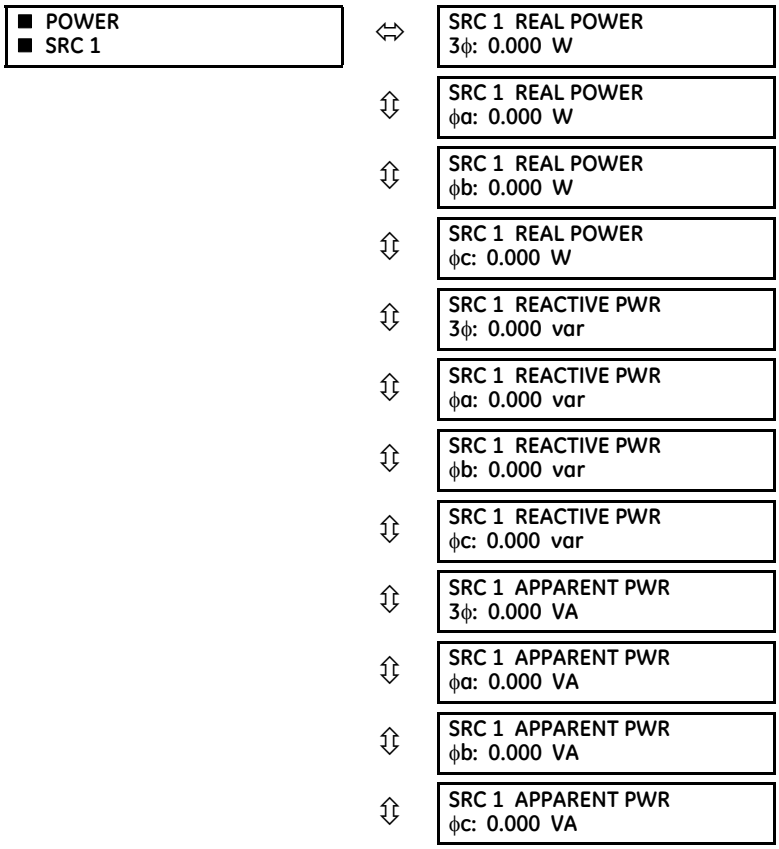

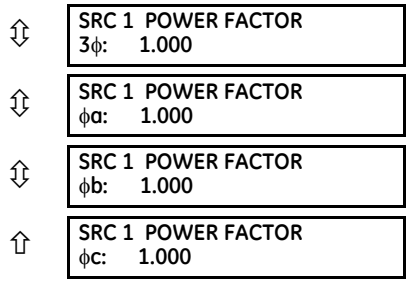

This menu displays metered values for real, reactive, and apparent power, as well as power factor. The "SRC 1" text is replaced by the name programmed by the user for the associated source (see **SETTINGS ⇨⇩ SYSTEM SETUP ⇨⇩ SIGNAL SOURCES**).

When VTs are configured in wye, the F60 calculates power in each phase and three-phase power is measured as

$$S = V_A \times \hat{I}_A + V_B \times \hat{I}_B + V_C \times \hat{I}_C \quad \textbf{Eq. 6-1}$$

When VTs are configured in delta, the F60 does not calculate power in each phase and three-phase power is measured as

$$S = V_{AB} \times \hat{I}_A + V_{CB} \times \hat{I}_C \quad \textbf{Eq. 6-2}$$

where

S is the apparent power

V_A, V_B, V_C, I_A, I_B, I_C are phase voltage and phase current phasors

V_{AB} and V_{CB} are phase-to-phase voltage phasors

$\hat{I}$ is the conjugate of I

6.3.2.7 Energy metering

ACTUAL VALUES ⇨⇩ METERING ⇨ SOURCE SRC 1 ⇨⇩ ENERGY

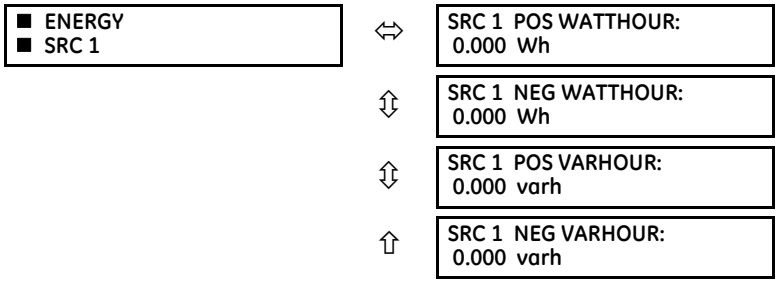

This menu displays metered values for real and reactive energy. The "SRC 1" text is replaced by the name programmed by the user for the associated source (see **SETTINGS ⇨⇩ SYSTEM SETUP ⇨⇩ SIGNAL SOURCES**). Because energy values are accumulated, record them and then reset them immediately prior to changing CT or VT characteristics.

6.3.2.8 Demand metering

ACTUAL VALUES ⇨⇩ METERING ⇨ SOURCE SRC 1 ⇨⇩ DEMAND

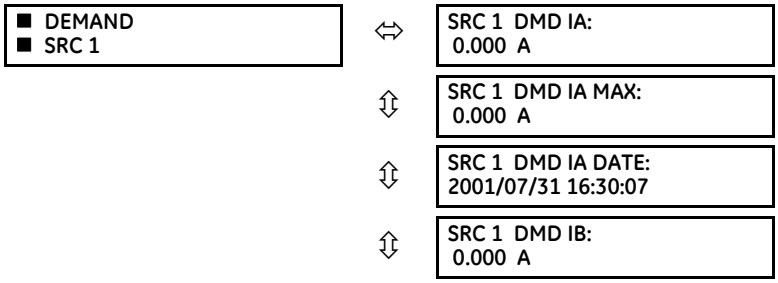

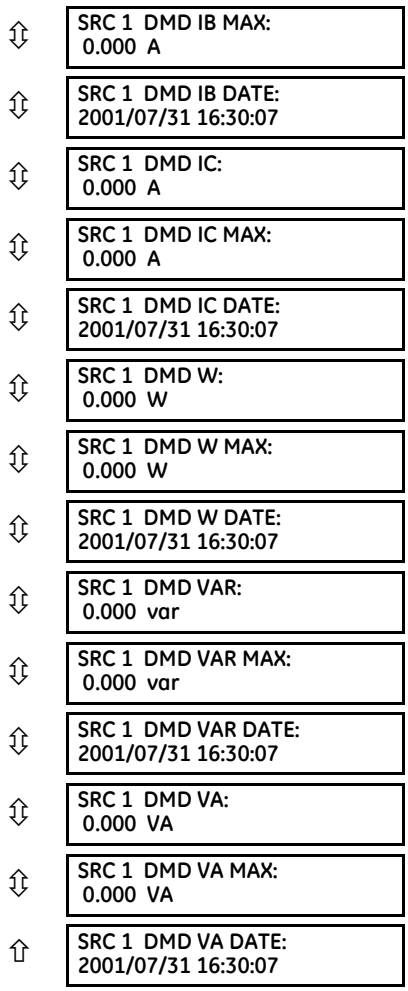

This menu displays metered values for current and power demand. The "SRC 1" text is replaced by the name programmed by the user for the associated source (see **SETTINGS ⇨⇩ SYSTEM SETUP ⇨⇩ SIGNAL SOURCES**).

The relay measures (absolute values only) the source demand on each phase and average three phase demand for real, reactive, and apparent power. These parameters can be monitored to reduce supplier demand penalties or for statistical metering purposes. Demand calculations are based on the measurement type selected in the **SETTINGS ⇨ PRODUCT SETUP ⇨⇩ DEMAND** menu. For each quantity, the relay displays the demand over the most recent demand time interval, the maximum demand since the last maximum demand reset, and the time and date stamp of this maximum demand value. Maximum demand quantities can be reset to zero with the **CLEAR RECORDS ⇨⇩ CLEAR DEMAND RECORDS** command.

6.3.2.9 Frequency metering

ACTUAL VALUES ⇨⇩ METERING ⇨ SOURCE SRC 1 ⇨⇩ FREQUENCY

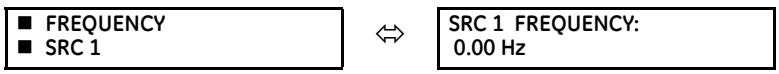

The metered frequency values are displayed in this menu. The "SRC 1" text is replaced by the name programmed by the user for the associated source (see **SETTINGS ⇨⇩ SYSTEM SETUP ⇨⇩ SIGNAL SOURCES**).

SOURCE FREQUENCY is measured via software-implemented zero-crossing detection of an AC signal. The signal is either a Clarke transformation of three-phase voltages or currents, auxiliary voltage, or ground current as per source configuration (see the **SYSTEM SETUP ⇨⇩ POWER SYSTEM** settings). The signal used for frequency estimation is low-pass filtered. The final frequency measurement is passed through a validation filter that eliminates false readings due to signal distortions and transients.

6.3.2.10 Current harmonics and THD metering

ACTUAL VALUES ⇨⇩ METERING ⇨ SOURCE SRC 1 ⇨⇩ CURRENT HARMONICS

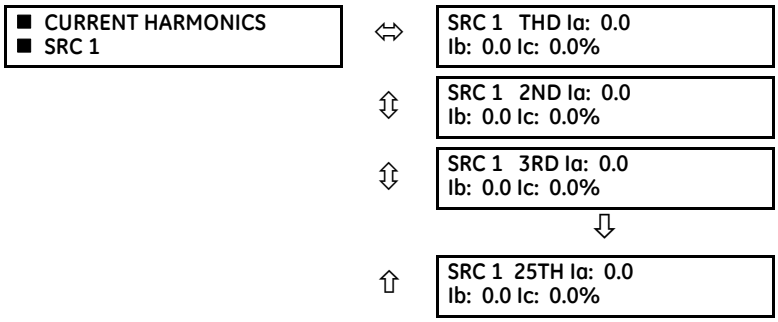

This menu displays metered current harmonics values. The "SRC 1" text is replaced by the name was programmed for the associated source (see **SETTINGS ⇨⇩ SYSTEM SETUP ⇨⇩ SIGNAL SOURCES**). Current harmonics are measured for each source for the total harmonic distortion (THD) and 2nd to 25th harmonics per phase.

6.3.2.11 Voltage harmonics and THD metering

ACTUAL VALUES ⇨⇩ METERING ⇨ SOURCE SRC 1 ⇨⇩ VOLTAGE HARMONICS

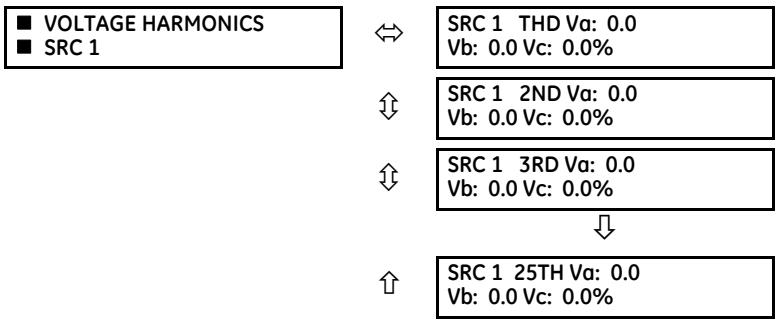

This menu displays metered voltage harmonics values. The "SRC 1" text is replaced by the programmed name for the associated source (see the **SETTINGS ⇨⇩ SYSTEM SETUP ⇨⇩ SIGNAL SOURCES** menu).

To extract the 2nd to 25th voltage harmonics, each harmonic is computed on a per-phase basis, where:

N = 64 is the number of samples per cycle
$\omega_0 = 2\pi f$ is the angular frequency based on the system frequency (50 or 60 Hz)
k = 1, 2,..., N – 1 is the index over one cycle for the Fast Fourier Transform (FFT)
m is the last sample number for the sliding window
h = 1, 2,..., 25 is the harmonic number

The short-time Fourier transform is applied to the unfiltered signal:

$$F_{real}(m,h) = \frac{2}{N}\sum_{k}(f(m-k)\cdot\cos(h\cdot\omega_0\cdot t(k)))$$

$$F_{imag}(m,h) = \frac{2}{N}\sum_{k}(f(m-k)\cdot\sin(h\cdot\omega_0\cdot t(k))) \qquad \textbf{Eq. 6-3}$$

$$F_{ampl}(m,h) = \sqrt{F_{real}(m,h)^2 + F_{imag}(m,h)^2}$$

The harmonics are a percentage of the fundamental signal obtained as a ratio of harmonic amplitude to fundamental amplitude multiplied by 100%. The total harmonic distortion (THD) is the ratio of the total harmonic content to the fundamental:

$$THD = \sqrt{F_2^2 + F_3^2 + \ldots + F_{25}^2} \qquad \textbf{Eq. 6-4}$$

NOTE

Voltage harmonics are not available on F60 relays configured with the high-impedance fault detection (Hi-Z) feature.

NOTE

Voltage harmonics are calculated only for Wye connected phase VTs. Ensure that the **SYSTEM SETUP** ⇨ **AC INPUTS** ⇨⇩ **VOLTAGE BANK F5** ⇨⇩ **PHASE VT XX CONNECTION** setting is "Wye" to enable voltage harmonics metering.

6.3.3 Sensitive directional power

ACTUAL VALUES ⇨⇩ METERING ⇨⇩ SENSITIVE DIRECTIONAL POWER

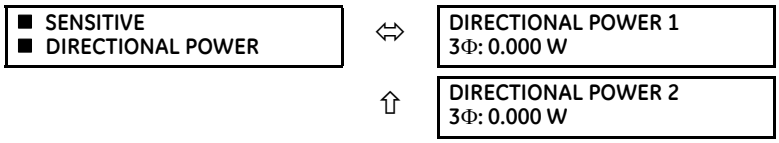

The effective operating quantities of the sensitive directional power elements display here. The display is useful to calibrate the feature by compensating the angular errors of the CTs and VTs with the use of the **RCA** and **CALIBRATION** settings.

6.3.4 Synchrocheck

ACTUAL VALUES ⇨⇩ METERING ⇨ SYNCHROCHECK ⇨⇩ SYNCHROCHECK 1(4)

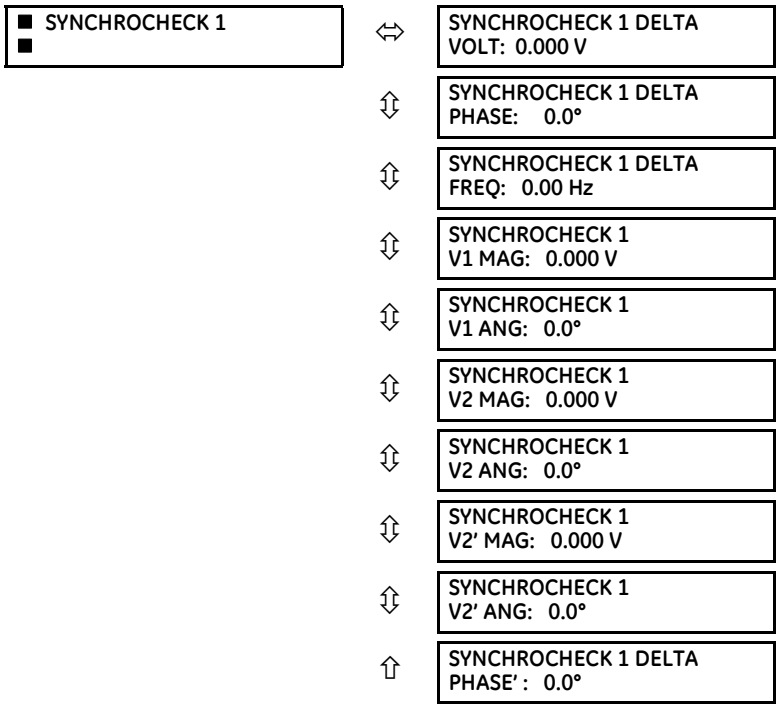

If a synchrocheck function setting is "Disabled," the corresponding actual values menu item does not display.

6.3.5 Tracking frequency

ACTUAL VALUES ⇨⇩ METERING ⇨⇩ TRACKING FREQUENCY

The tracking frequency displays here. The frequency is tracked based on the selection of the reference source with the **FREQUENCY AND PHASE REFERENCE** setting in the **SETTINGS ⇨⇩ SYSTEM SETUP ⇨⇩ POWER SYSTEM** menu. See the Power System section of chapter 5 for details.

6.3.6 Frequency rate of change

ACTUAL VALUES ⇨⇩ METERING ⇨⇩ FREQUENCY RATE OF CHANGE

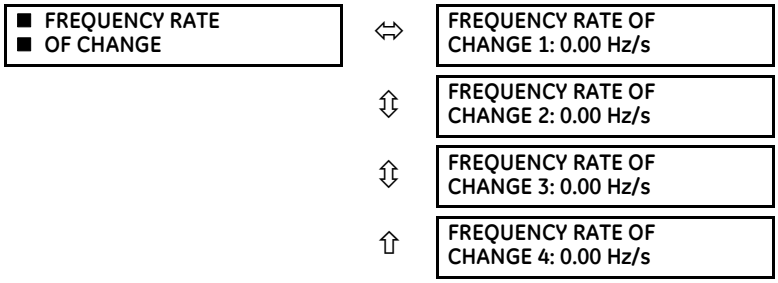

The metered frequency rate of change for the frequency rate of change elements is shown here.

6.3.7 FlexElements

ACTUAL VALUES ⇨⇩ METERING ⇨⇩ FLEXELEMENTS ⇨ FLEXELEMENT 1(8)

The operating signals for the FlexElements are displayed in pu values using the following definitions of the base units.

Table 6-2: FlexElement base units

Base unit	Description
BREAKER ACC ARCING AMPS (Brk X Acc Arc Amp A, B, and C)	BASE = 2000 kA^2 × cycle
BREAKER ARCING AMPS (Brk X Arc Amp A, B, and C)	BASE = 1 kA^2 × cycle
DCmA	BASE = maximum value of the **DCMA INPUT MAX** setting for the two transducers configured under the +IN and –IN inputs.
FAULT LOCATION	BASE = Line Length as specified in Fault Report
FREQUENCY	f_{BASE} = 1 Hz
FREQUENCY RATE OF CHANGE	df/dt_{BASE} = 1 Hz/s
PHASE ANGLE	φ_{BASE} = 360 degrees (see the UR angle referencing convention)
POWER FACTOR	PF_{BASE} = 1.00
RTDs	BASE = 100°C
SENSITIVE DIR POWER (Sns Dir Power)	P_{BASE} = maximum value of 3 × V_{BASE} × I_{BASE} for the +IN and –IN inputs of the sources configured for the sensitive power directional element(s).
SOURCE CURRENT	I_{BASE} = maximum nominal primary RMS value of the +IN and –IN inputs
SOURCE ENERGY (Positive and Negative Watthours, Positive and Negative Varhours)	E_{BASE} = 10000 MWh or MVAh, respectively
SOURCE POWER	P_{BASE} = maximum value of V_{BASE} × I_{BASE} for the +IN and –IN inputs

Base unit	Description
SOURCE THD & HARMONICS	BASE = 1%
SOURCE VOLTAGE	V_{BASE} = maximum nominal primary RMS value of the +IN and –IN inputs
SYNCHROCHECK (Max Delta Volts)	V_{BASE} = maximum primary RMS value of all the sources related to the +IN and –IN inputs

6.3.8 RxGOOSE analogs

ACTUAL VALUES ⇨⇩ METERING ⇨⇩ RxGOOSE Analogs

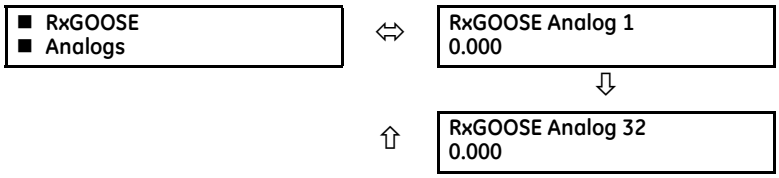

The F60 is provided with optional GOOSE communications capability. This feature is specified as a software option at the time of ordering. See the Order Codes section of chapter 2 for details.

The RxGOOSE Analog values display in this menu. The RxGOOSE Analog values are received via IEC 61850 GOOSE messages sent from other devices.

6.3.9 Wattmetric ground fault

ACTUAL VALUES ⇨⇩ METERING ⇨⇩ WATTMETRIC GROUND FAULT 1(2)

This menu displays the wattmetric zero-sequence directional element operating power values.

6.3.10 Phasor Measurement Unit

ACTUAL VALUES ⇨⇩ METERING ⇨⇩ PHASOR MEASURMENT UNIT ⇨⇩ PMU 1

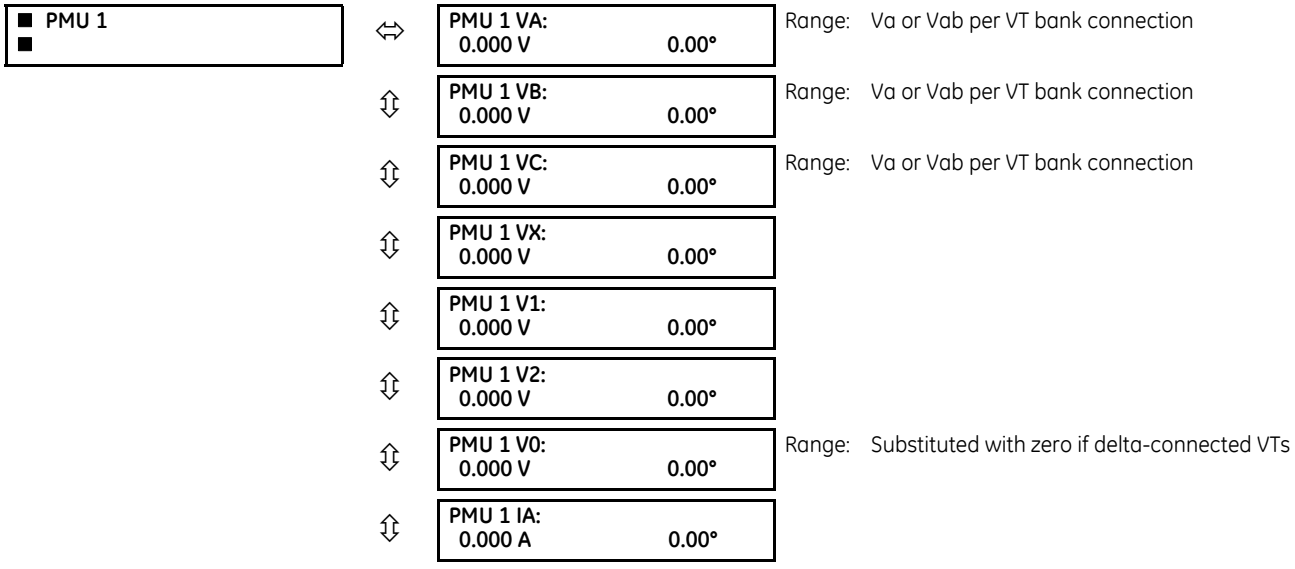

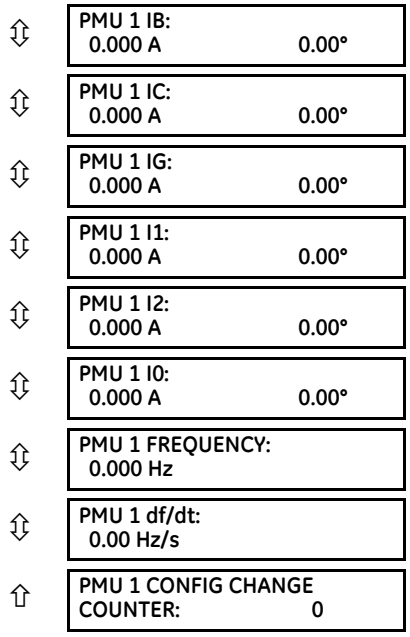

Range: 0 to 65535

These actual values display without the corresponding time stamp as they become available per the recording rate setting. Also, the recording post-filtering setting is applied to these values.

6.3.11 PMU aggregator

ACTUAL VALUES ⇨⇩ METERING ⇨⇩ PHASOR MEASURMENT UNIT ⇨ PMU AGGREGATOR 1

Actual values for the IEC 61850-90-5 PDU size are provided. These values allow you to know the approximate Ethernet frame size for the data streams from each aggregator. This can help to estimate network loading. The PDU size shown in the displays does not include the Ethernet, UDP, or IP layers. PDU sizes approaching approximately 1500 bytes result in fragmented data frames, causing increased network traffic.

6.3.12 Restricted ground fault

ACTUAL VALUES ⇨⇩ METERING ⇨⇩ RESTRICTED GROUND FAULT CURRENTS ⇨ RESTRICTED GROUND FAULT 1(6)

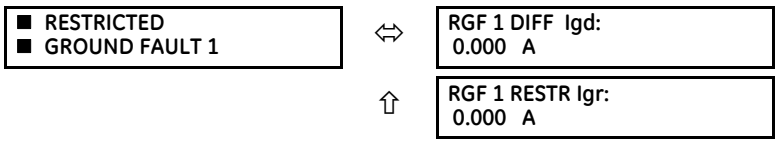

This menu displays the differential and restraint current values for the restricted ground fault element.

6.3.13 Transducer inputs and outputs

ACTUAL VALUES ⇨⇩ METERING ⇨⇩ TRANSDUCER I/O DCMA INPUTS ⇨ DCMA INPUT xx

Actual values for each DCmA input channel that is enabled are displayed with the top line as the programmed channel ID and the bottom line as the value followed by the programmed units.

ACTUAL VALUES ⇨⇩ METERING ⇨⇩ TRANSDUCER I/O RTD INPUTS ⇨ RTD INPUT xx

■ RTD INPUT xx ■	⇔	RTD INPUT xx -50 °C

Actual values for each RTD input channel that is enabled are displayed with the top line as the programmed channel ID and the bottom line as the value.

6.4 Records

6.4.1 Fault reports

ACTUAL VALUES ⇨⇩ RECORDS ⇨ FAULT REPORTS ⇨ FAULT REPORT 1(15)

NO FAULTS TO REPORT

or

■ FAULT REPORT 1 ■	⇔	FAULT 1 LINE ID: SRC 1	Range: SRC 1, SRC 2
	⇩	FAULT 1 DATE: 2000/08/11	Range: YYYY/MM/DD
	⇩	FAULT 1 TIME: 00:00:00.000000	Range: HH:MM:SS.ssssss
	⇩	FAULT 1 TYPE: ABG	Range: not available if the source VTs are in the "Delta" configuration
	⇩	FAULT 1 LOCATION 00.0 km	Range: not available if the source VTs are in the "Delta" configuration
	⇧	FAULT 1 RECLOSE SHOT: 0	Range: where applicable

The latest 15 fault reports can be stored. The most recent fault location calculation (when applicable) is displayed in this menu, along with the date and time stamp of the event which triggered the calculation. See the **SETTINGS ⇨ PRODUCT SETUP ⇨⇩ FAULT REPORTS** menu for assigning the source and trigger for fault calculations. See the **COMMANDS ⇨⇩ CLEAR RECORDS** menu for manual clearing of the fault reports and to the **SETTINGS ⇨ PRODUCT SETUP ⇨⇩ CLEAR RELAY RECORDS** menu for automated clearing of the fault reports.

6.4.2 Event records

ACTUAL VALUES ⇨⇩ RECORDS ⇨⇩ EVENT RECORDS

■ EVENT RECORDS ■	⇔	EVENT: XXXX RESET OP(PUSHBUTTON)		
		⇩		Date and time stamps
	⇩	EVENT: 3 POWER ON	⇔ ⇩	EVENT 3 DATE: 2000/07/14
	⇩	EVENT: 2 POWER OFF	⇧	EVENT 3 TIME: 14:53:00.03405
	⇧	EVENT: 1 EVENTS CLEARED		

The event records menu shows the contextual data associated with up to the last 1024 events, listed in chronological order from most recent to oldest. When all 1024 event records have been filled, the oldest record is removed as a new record is added. Each event record shows the event identifier/sequence number, cause, and date/time stamp associated with the event trigger. See the **COMMANDS ⇨⇩ CLEAR RECORDS** menu for clearing event records.

Only major output operands generate events, not every operand. Elements that assert output per phase, for example, log operating phase output only without asserting the common three-phase operand event.

The event records are also viewable in the software and in a web browser. The figure shows the event records in the software. To view them in a web browser, enter the IP address of the device.

Figure 6-4: Event records viewed in EnerVista software

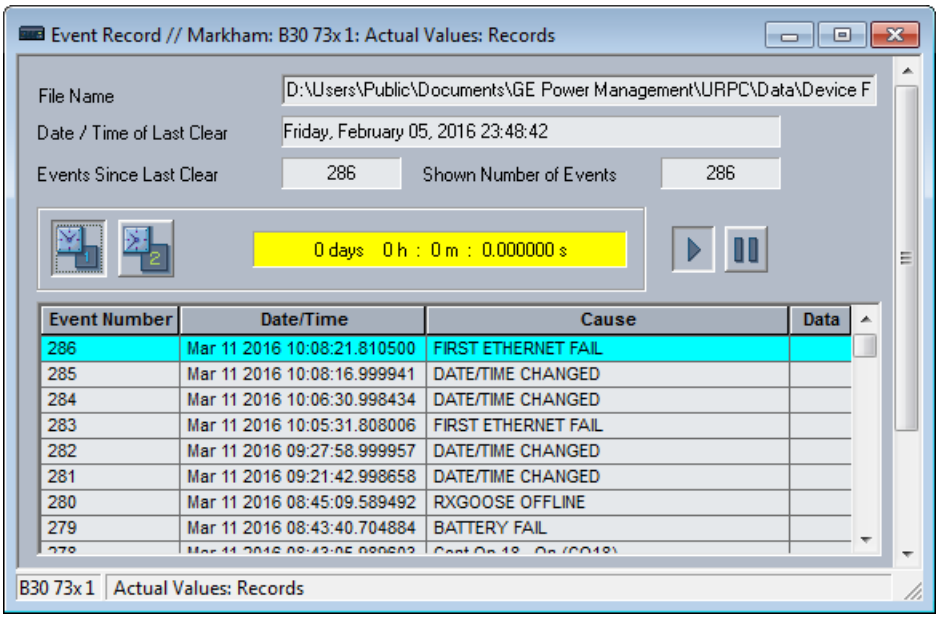

6.4.3 Oscillography

ACTUAL VALUES ⇨⇩ RECORDS ⇨⇩ OSCILLOGRAPHY

■ OSCILLOGRAPHY
■

⇔ **FORCE TRIGGER?**
No
Range: No, Yes

⇳ **NUMBER OF TRIGGERS:**
0

⇳ **AVAILABLE RECORDS:**
0

⇳ **CYCLES PER RECORD:**
0

⇧ **LAST CLEARED DATE:**
2000/07/14 15:40:16

This menu allows the user to view the number of triggers involved and number of oscillography traces available. The cycles per record value is calculated to account for the fixed amount of data storage for oscillography. See the Oscillography section of chapter 5 for details.

A trigger can be forced here at any time by setting "Yes" to the FORCE TRIGGER? command. See the **COMMANDS ⇨⇩ CLEAR RECORDS** menu for information on clearing the oscillography records.

6.4.4 Data logger

ACTUAL VALUES ⇨⇩ RECORDS ⇨⇩ DATA LOGGER

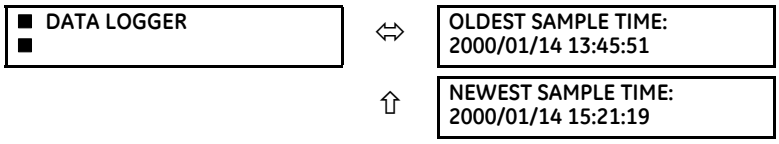

The **OLDEST SAMPLE TIME** represents the time at which the oldest available samples were taken. It is static until the log gets full, at which time it starts counting at the defined sampling rate.

The **NEWEST SAMPLE TIME** represents the time the most recent samples were taken. It counts up at the defined sampling rate. If the data logger channels are defined, then both values are static.

See the **COMMANDS ⇨⇩ CLEAR RECORDS** menu for clearing data logger records.

6.4.5 Phasor Measurement Unit records

ACTUAL VALUES ⇨ RECORDS ⇨⇩ PMU RECORDS

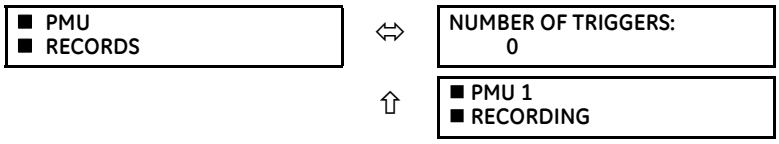

Range: 0 to 65535 in steps of 1

See below

The number of triggers applicable to the Phasor Measurement Unit recorder is indicated by the **NUMBER OF TRIGGERS** value. The status of the phasor measurement unit recorder is indicated as follows.

ACTUAL VALUES ⇨ RECORDS ⇨⇩ PMU RECORDS ⇨ PMU 1 RECORDING

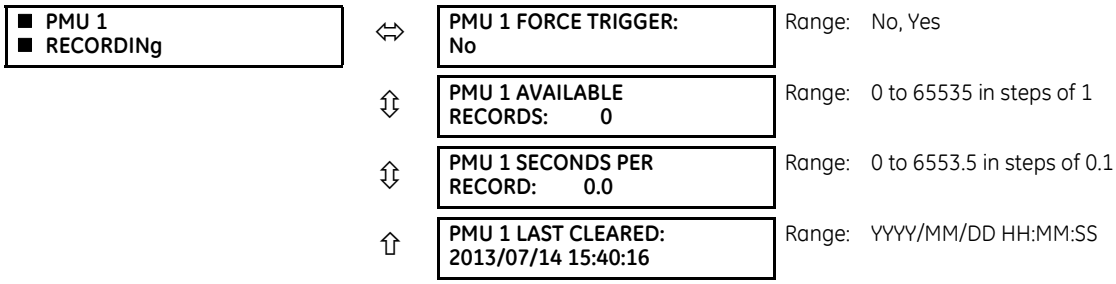

Range: No, Yes

Range: 0 to 65535 in steps of 1

Range: 0 to 6553.5 in steps of 0.1

Range: YYYY/MM/DD HH:MM:SS

6.4.6 Breaker maintenance

ACTUAL VALUES ⇨⇩ RECORDS ⇨⇩ MAINTENANCE ⇨ BREAKER 1(2)

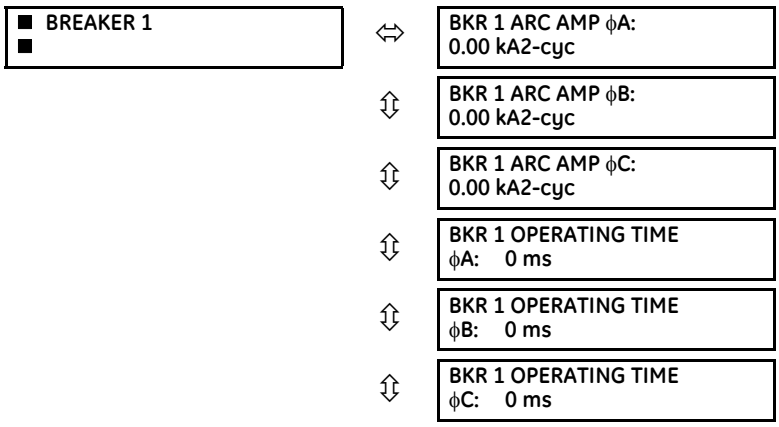

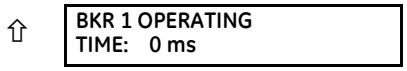

There is an identical menu for each of the breakers.

The **BKR 1 ARC AMP** values are in units of kA^2-cycles. See the **COMMANDS ⇨⇩ CLEAR RECORDS** menu for clearing breaker arcing current records.

The **BREAKER OPERATING TIME** is defined as the slowest operating time of breaker poles that were initiated to open.

6.4.7 Hi-Z records

ACTUAL VALUES ⇨⇩ RECORDS ⇨⇩ HIZ RECORDS

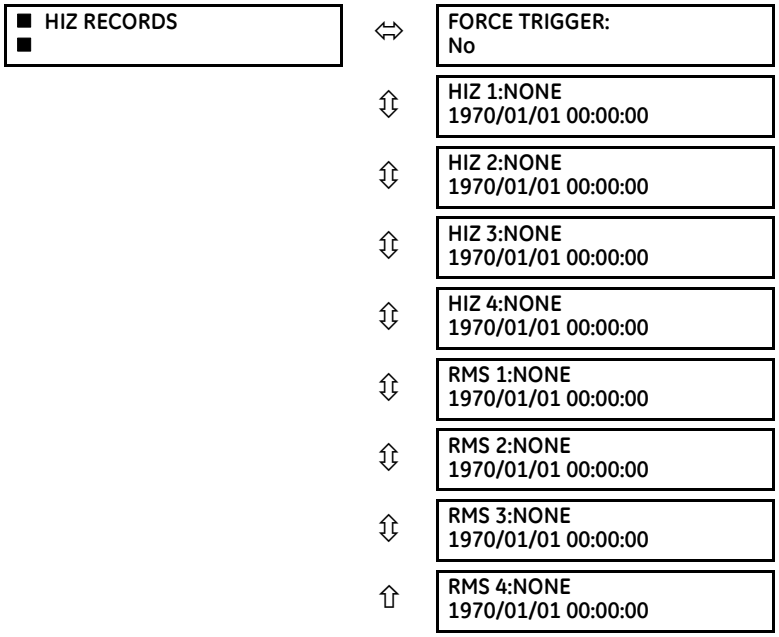

Two types of high impedance fault detection element records are stored in non-volatile memory and available from this menu. If the element is triggered by a high impedance overcurrent condition, then the records display in the RMS 1 to RMS 4 actual values. If the element is triggered by high impedance fault detection arcing algorithm, then the records display in the HIZ 1 to HIZ 4 actual values. See the High-Impedance Fault Detection (Hi-Z) section near the end of chapter 5 for information.

6.5 Product information

6.5.1 Model information

ACTUAL VALUES ⇨⇩ PRODUCT INFO ⇨ MODEL INFORMATION

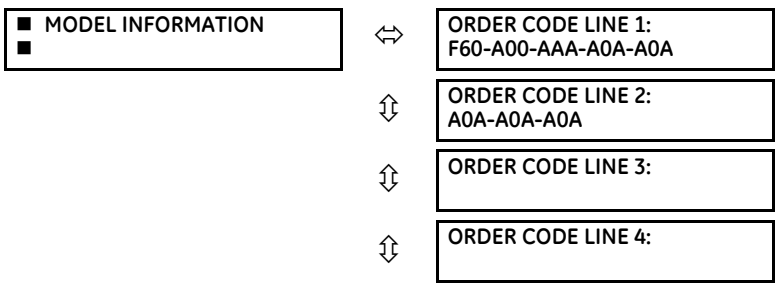

Range: standard GE order code format (lines 1 to 4)

Range: up to 20 alphanumeric characters

Range: up to 20 alphanumeric characters

Range: up to 20 alphanumeric characters

⇳	**SERIAL NUMBER:**	Range: standard GE serial number format
⇳	**ETHERNET MAC ADDRESS 000000000000**	Range: standard Ethernet MAC address format
⇳	**MANUFACTURING DATE:**	Range: YYYY/MM/DD HH:MM:SS
⇳	**OPERATING TIME: 0:00:00**	Range: operating time in HH:MM:SS
⇳	**PMU FEATURE ACTIVE: No**	Range: Yes, No
⇳	**CT/ VT ADVANCED DIAG ACTIVE: No**	Range: Yes, No
⇧	**LAST SETTING CHANGE: 1970/01/01 23:11:19**	Range: YYYY/MM/DD HH:MM:SS

The order code, serial number, Ethernet MAC address, date and time of manufacture, and operating time are shown here. The rear panel on the device contains similar information.

ETHERNET MAC ADDRESS — UR devices with firmware 7.0x and above have three Ethernet ports that can be used on three networks. The MAC address displays for port 1. The MAC address for port 2 is one higher. The MAC address for port 3 is one higher than port 2. In redundant mode, the MAC addresses for ports 2 and 3 are the same as port 2.

6.5.2 Firmware revisions

ACTUAL VALUES ⇨⇩ PRODUCT INFO ⇨ FIRMWARE REVISIONS

■ **FIRMWARE REVISIONS** ■	⇔	**F60 Relay REVISION: 7.3x**	Range: 0.00 to 655.35 Revision number of the application firmware.
	⇳	**MODIFICATION FILE NUMBER: 0**	Range: 0 to 65535 (ID of the MOD FILE) Value is 0 for each standard firmware release.
	⇳	**BOOT PROGRAM REVISION: 7.01**	Range: 0.00 to 655.35 Revision number of the boot program firmware.
	⇳	**FRONT PANEL PROGRAM REVISION: 2.01**	Range: 0.00 to 655.35 Revision number of faceplate program firmware.
	⇳	**COMPILE DATE: 2013/09/15 04:55:16**	Range: YYYY/MM/DD HH:MM:SS Date and time when product firmware was built.
	⇳	**BOOT DATE: 2013/09/15 16:41:32**	Range: YYYY/MM/DD HH:MM:SS Date and time when the boot program was built.
	⇳	**FPGA PROGRAM: REVISION: 01.05**	Range: 0.00 to 655.35 Revision number for FPGA.
	⇧	**FPGA DATA: 2013/09/15 16:41:32**	Range: YYYY/MM/DD HH:MM:SS Date and time when the FPGA was built.

The shown data is illustrative only. A modification file number of 0 indicates that, currently, no modifications have been installed.

F60 Feeder Protection System

Chapter 7: Commands and targets

This chapter outlines the Commands and Targets menus and self-tests/error messages. Commands related to the IEC 61850 protocol are outlined in the IEC 61850 section of the Settings chapter. Log/error messages for IEC 61850 are outlined in the UR Series Communications Guide.

7.1 Commands menu

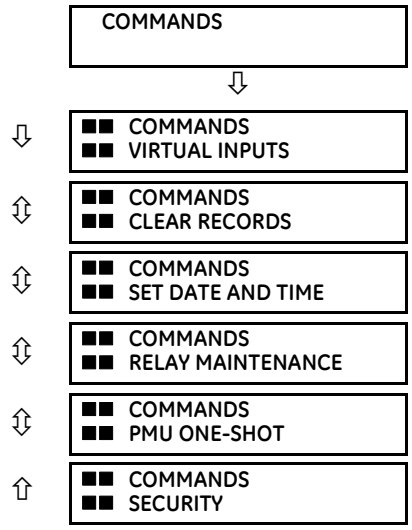

The commands menu contains relay directives intended for operations personnel. All commands can be protected from unauthorized access via the command password; see the Security section of chapter 5 for details. The following flash message appears after successfully command entry.

7.1.1 Virtual inputs

COMMANDS ⇨ VIRTUAL INPUTS

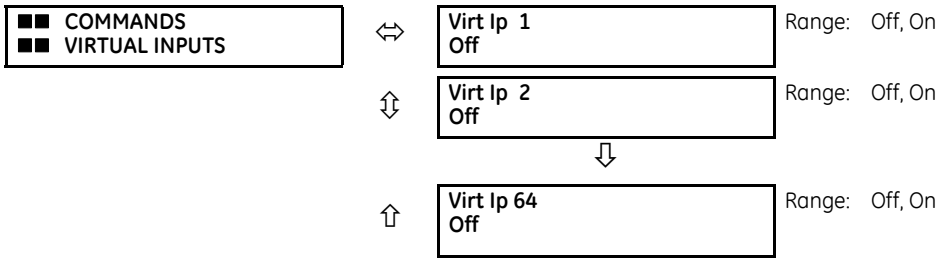

The states of up to 64 virtual inputs are changed here. The first line of the display indicates the ID of the virtual input. The second line indicates the current or selected status of the virtual input. This status is a state off (logic 0) or on (logic 1).

7.1.2 Clear records

COMMANDS ⇨ CLEAR RECORDS

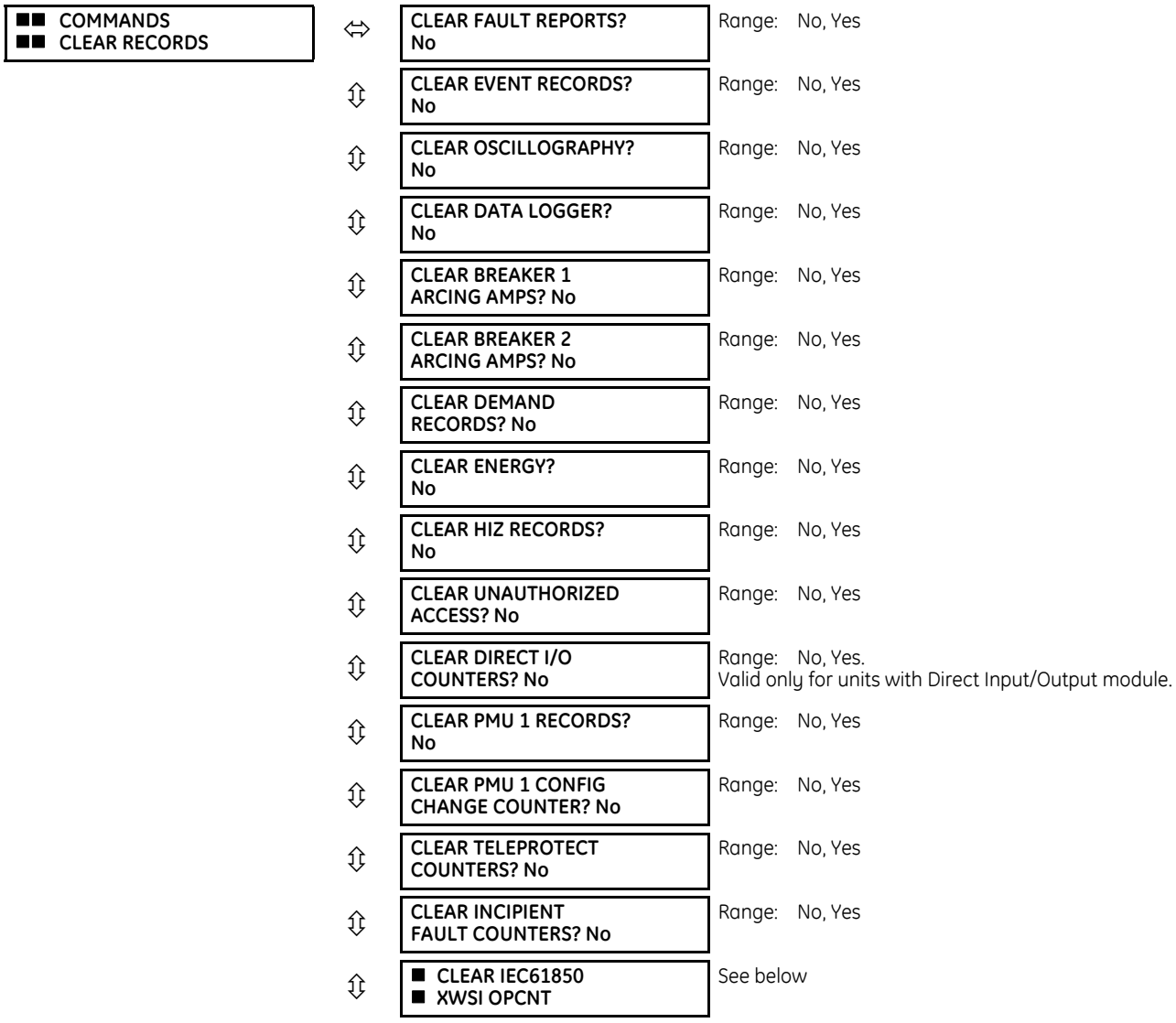

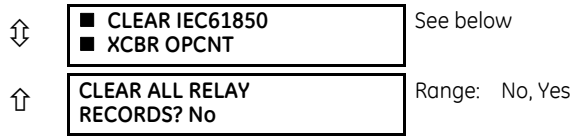

This menu contains commands for clearing historical data such as the event records. Data is cleared by changing a command setting to "Yes" and pressing the **ENTER** key. After clearing data, the command setting automatically reverts to "No."

COMMANDS ⇨ CLEAR RECORDS ⇨⇩ CLEAR IEC61850 XWSI OPCNT

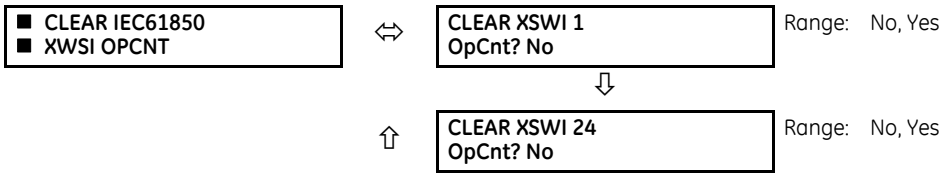

COMMANDS ⇨ CLEAR RECORDS ⇨⇩ CLEAR IEC61850 XCBR OPCNT

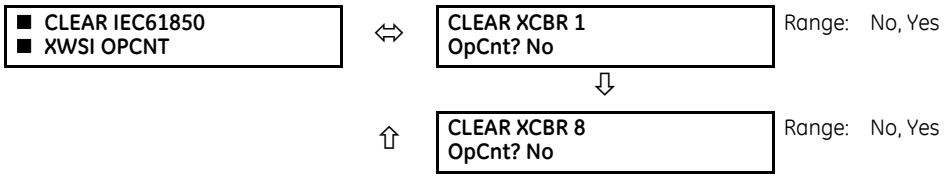

The Clear XSWI commands clear the disconnect operation counters for each phase and the three-phase counter. Similarly, the Clear XCBR commands clear the circuit breaker operation counters for each phase and the three-phase counter.

7.1.3 Set date and time

COMMANDS ⇨⇩ SET DATE AND TIME

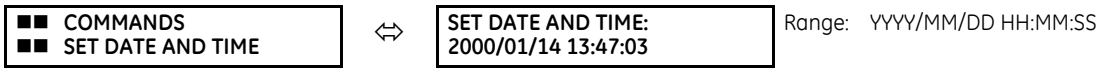

The date and time can be entered on the faceplate keypad. The time setting is based on the 24-hour clock. The complete date, as a minimum, must be entered to allow execution of this command. The new time and date take effect when the **ENTER** key is pressed.

When the relay is synchronizing to an external time source such as PTP, IRIG-B, or SNTP, the manually entered time is over-written.

The timescale of the entered time is local time, including daylight savings time where and when applicable.

7.1.4 Relay maintenance

COMMANDS ⇨⇩ RELAY MAINTENANCE

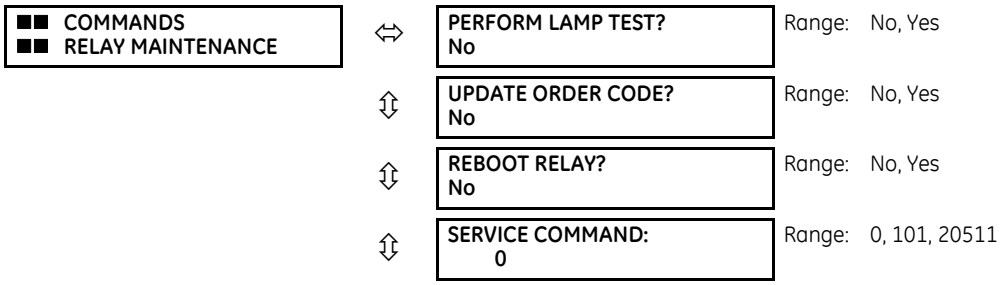

⇧ **SAVE VOLATILE DATA?: No** Range: No, Yes

This menu contains commands for relay maintenance purposes. Commands for the lamp test and order code are activated by changing a command setting to "Yes" and pressing the **ENTER** key. The command setting then automatically reverts to "No." The service command is activated by entering a numerical code and pressing the **ENTER** key.

PERFORM LAMP TEST — Turns on all faceplate LEDs and display pixels for a short duration.

UPDATE ORDER CODE — This command causes the relay to scan the backplane for the hardware modules and update the order code to match. If an update occurs, the following message displays.

UPDATING...
PLEASE WAIT

There is no impact if there have been no changes to the hardware modules. When an update does not occur, the ORDER CODE NOT UPDATED message displays.

REBOOT RELAY — Restarts the relay so that changes to configuration settings can take effect. In most cases, if changes are made to the configuration settings these changes do not take effect unless the relay is rebooted.

NOTE

With the CyberSentry option, the Administrator or Operator role can initiate the Reboot Relay command.

SERVICE COMMAND — Performs specific F60 service actions. Presently, there are two service actions available. Code "20511" returns all settings to their factory default value and restarts the relay (you then re-enter IP addresses, restart, set unit to "Programmed"). Code "101" is used to clear factory diagnostic information stored in the non-volatile memory. If a code other than these two is entered, the command is ignored and no action is taken. Various self-checking diagnostics are performed in the background while the F60 is running, and diagnostic information is stored on the non-volatile memory from time to time based on the self-checking result. Although the diagnostic information is cleared before the F60 is shipped from the factory, the user can want to clear the diagnostic information for themselves under certain circumstances. For example, you clear diagnostic information after replacement of hardware. Once the diagnostic information is cleared, all self-checking variables are reset to their initial state and diagnostics restart from scratch.

SAVE VOLATILE DATA — Saves this data to compact flash memory prior to shutdown. This allows the saved data to be as recent as possible instead of relying on the periodic timer to save the data.

7.1.5 Phasor Measurement Unit one-shot

COMMANDS ⇨⇩ PMU ONE-SHOT

■■ COMMANDS
■■ PMU ONE-SHOT

⇔ **PMU ONE-SHOT FUNCTION: Disabled** Range: Enabled, Disabled

⇳ **PMU ONE-SHOT SEQUENCE NUMBER: 0** Range: 0 to nominal frequency – 1 in steps of 1

⇧ **PMU ONE-SHOT TIME: 2013/06/14 7:58:35** Range: YYYY/MM/DD HH:MM:SS

This feature allows pre-scheduling of a PMU measurement at a specific point in time. It can be used to test for accuracy of the PMU and for manual collection of synchronized measurements through the system, as explained here.

When enabled, the function continuously compares the present time with the pre-set **PMU ONE-SHOT TIME**. When the two times match, the function compares the present sequence number of the measured synchrophasors with the pre-set **PMU ONE-SHOT SEQUENCE NUMBER**. When the two numbers match, the function freezes the synchrophasor actual values and the corresponding protocol data items for 30 seconds. This allows manual read-out of the synchrophasor values for the pre-set time and pre-set sequence number (via the faceplate display, supported communication protocols such as Modbus or DNP, and the EnerVista UR Setup software).

When freezing the actual values, the function also asserts a PMU ONE-SHOT OP FlexLogic operand. This operand can be configured to drive an output contact and trigger an external measuring device such as a digital scope with the intent to verify the accuracy of the PMU under test.

With reference to the following figure, the PMU one-shot function (when enabled) controls three FlexLogic operands:

- The PMU ONE-SHOT EXPIRED operand indicates that the one-shot operation has been executed, and the present time is at least 30 seconds past the scheduled one-shot time
- The PMU ONE-SHOT PENDING operand indicates that the one-shot operation is pending; that is, the present time is before the scheduled one-shot time
- The PMU ONE-SHOT OP operand indicates the one-shot operation and remains asserted for 30 seconds afterwards

When the function is disabled, all three operands are de-asserted.

The one-shot function applies to all logical PMUs of a given F60 relay.

Figure 7-1: PMU one-shot FlexLogic operands

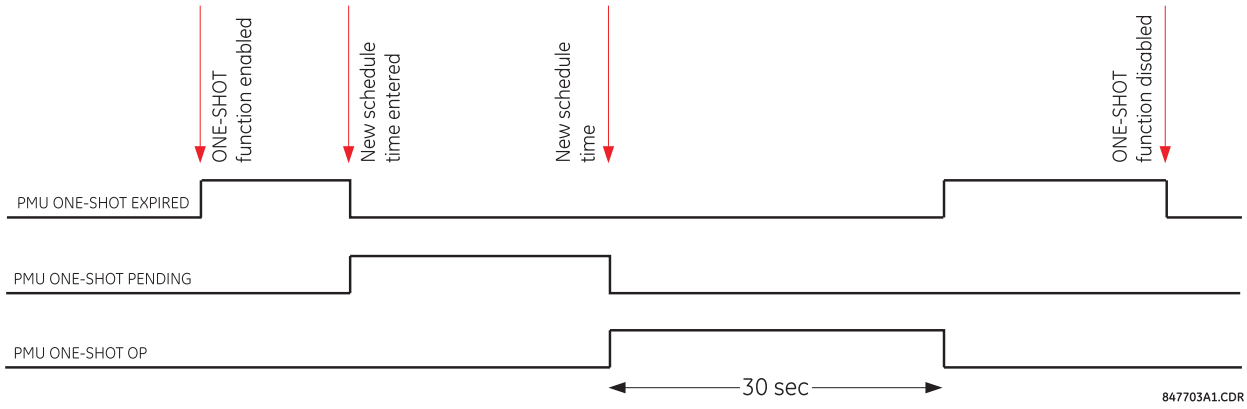

7.1.5.1 Testing accuracy of the PMU

The one-shot feature is used to test accuracy of the synchrophasor measurement. GPS-synchronized tests sets perform a similar function to PMUs; instead of measuring the phasor from physical signals with respect to the externally provided time reference, they produce the physical signals with respect to the externally provided time reference, given the desired phasor values. Therefore the GPS-synchronized test sets cannot be automatically assumed more accurate than the PMUs under test. This calls for a method to verify both the measuring device (PMU) and the source of signal (test set).

With reference to the following figure, the one-shot feature can be configured to trigger a high-accuracy scope to capture both the time reference signal (rising edge of the 1 pps signal of the IRIG-B time reference) and the measured waveform. The high-accuracy high-sampling rate record of the two signals captured by the scope can be processed using digital tools to verify the magnitude and phase angle with respect to the time reference signal. As both the time reference and the measured signals are raw inputs to the PMU under test, their independently captured record, processed using third-party software, is a good reference point for accuracy calculations. Such a record proves useful when discussing the test results, and can be retained as a part of the testing documentation.

Figure 7-2: Using the PMU one-shot feature to test synchrophasor measurement accuracy

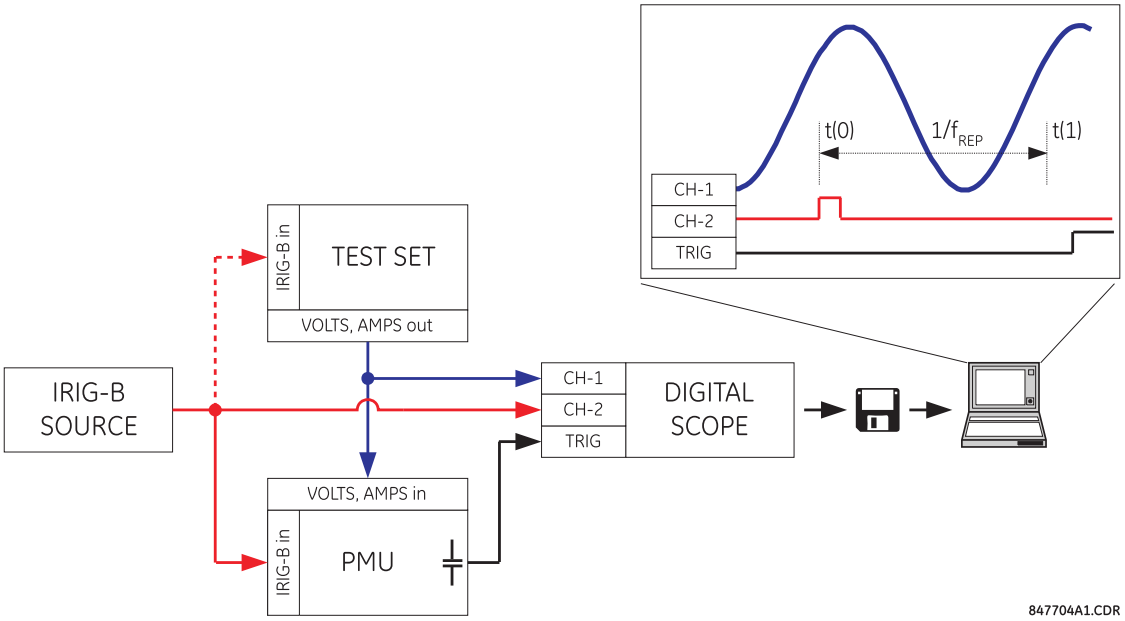

7.1.5.2 Collecting synchronized measurements ad hoc

The one-shot feature can be used for ad hoc collection of synchronized measurements in the network. Two or more PMUs can be pre-scheduled to freeze their measurements at the same time. When frozen, the measurements can be collected using the EnerVista software or a protocol client.

7.1.6 Security

COMMANDS ⇨⇩ SECURITY

■■ SECURITY ■■	⇔	**ADMINISTRATOR LOGOFF: No**	Range: Yes, No
	⇩	**ENGINEER LOGOFF: No**	Range: Yes, No
	⇩	**OPERATOR LOGOFF: No**	Range: Yes, No
	⇧	**CLEAR SECURITY DATA: No**	Range: Yes, No

With the CyberSentry option, this setting is available to enable or disable the following commands.

ADMINISTRATOR LOGOFF — Selecting 'Yes' allows the Supervisor to forcefully logoff an administrator session.

ENGINEER LOGOFF — Selecting 'Yes' allows the Supervisor to forcefully logoff an engineer session.

OPERATOR LOGOFF — Selecting 'Yes' allows the Supervisor to forcefully logoff an operator session.

CLEAR SECURITY DATA — Selecting 'Yes' allows the Supervisor to forcefully clear all the security logs and clears all the operands associated with the self-tests.

7.2 Targets menu

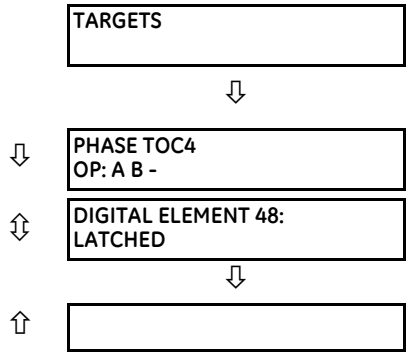

A target enables the EnerVista UR Setup software to monitor automatically and display the status of any active target messages of all the devices inserted into that site.

Each F60 element with a TARGET setting has a target message that when activated by its element is displayed in sequence with any other currently active target messages in the **TARGETS** menu. In the example shown, the Phase TOC4 and Digital Element 48 target settings are active and so have their targets displayed. The down arrow below the two elements indicates that there can be other active elements beyond these two.

For more information, see the description of target messages in the next section, and the Introduction to Elements section in the Settings chapter for instructions on TARGET setting.

When no targets are active, the display reads **NO ACTIVE TARGETS**.

7.2.1 Target messages

When there are no active targets, the first target to become active causes the display to immediately default to that message. If there are active targets and the user is navigating through other messages, and when the default message timer times out (i.e. the keypad has not been used for a determined period of time), the display again defaults back to the target message.

The range of variables for the target messages is described below. Phase information is included if applicable. If a target message status changes, the status with the highest priority displays.

Table 7-1: Target message priority status

Priority	Active status	Description
1	OP	element operated and still picked up
2	PKP	element picked up and timed out
3	LATCHED	element had operated but has dropped out

If a self test error is detected, a message appears indicating the cause of the error. For example UNIT NOT PROGRAMMED indicates that the minimal relay settings have not been programmed.

7.2.2 Relay self-tests

7.2.2.1 Description

The relay performs a number of self-test diagnostic checks to ensure device integrity. The two types of self-tests (major and minor) are listed in the following tables. When either type of error occurs, the Trouble LED Indicator turns on and a target message displays. All errors record an event in the event recorder. Latched errors can be cleared by pressing the **RESET** key, providing the condition is no longer present.

Major self-test errors also result in the following:

- The critical fail relay on the power supply module de-energizes
- All other output relays de-energize and are prevented from further operation
- The faceplate In Service LED indicator turns off
- A RELAY OUT OF SERVICE event is recorded

7.2.2.2 Major self-test error messages

The major self-test errors are outlined in this section.

INCOMPATIBLE H/W:
Contact Factory (xxx)

- *Latched target message*: Yes.
- *Description of problem*: One or more installed hardware modules is not compatible with the F60 order code.
- *How often the test is performed*: Module dependent.
- *What to do*: Contact the factory and supply the failure code noted in the display. The "xxx" text identifies the failed module (for example, F8L).

EQUIPMENT MISMATCH:
with 2nd line detail

- *Latched target message*: No.
- *Description of problem*: The configuration of modules does not match the order code stored in the F60. For example, "Card F8L Missing" means that hardware module 8L is missing from slot F inside the UR device.
- *How often the test is performed*: On power up. Afterwards, the backplane is checked for missing cards every five seconds.
- *What to do*: Check all modules against the order code, ensure they are inserted properly, and cycle control power. If the problem persists, contact the factory.

FLEXLOGIC ERROR:
with 2nd line detail

- *Latched target message*: No.
- *Description of problem*: A FlexLogic equation is incorrect.
- *How often the test is performed*: The test is event driven, performed whenever FlexLogic equations are modified.
- *What to do*: Finish all equation editing and use self tests to debug any errors.

UNIT NOT PROGRAMMED:
Check Settings

- *Latched target message*: No.
- *Description of problem*: The **PRODUCT SETUP ⇨⇩ INSTALLATION ⇨ RELAY SETTINGS** setting indicates the F60 is not programmed.
- *How often the test is performed*: On power up and whenever the **PRODUCT SETUP ⇨⇩ INSTALLATION ⇨ RELAY SETTINGS** setting is altered.
- *What to do*: Program all settings and then set **PRODUCT SETUP ⇨⇩ INSTALLATION ⇨ RELAY SETTINGS** to "Programmed."

MODULE FAILURE___:
Contact Factory (xxx)

- *Latched target message*: Yes.
- *Description of problem*: Module hardware failure detected. Module Failures 1 to 11 are major. The system can reboot for four of these, as follows.

MODULE FAILURE 06 — Event message reads SYSTEM INTEGRITRY RECOVERY 06 when a reboot was required and otherwise MODULE FAILURE 06 when a failure was detected

MODULE FAILURE 07 — Event message reads SYSTEM INTEGRITRY RECOVERY 07 when a reboot was required and otherwise MODULE FAILURE 07 when a failure was detected

MODULE FAILURE 08 — Event message reads SYSTEM INTEGRITRY RECOVERY 08 when a reboot was required and otherwise MODULE FAILURE 08 when a failure was detected

MODULE FAILURE 11 — Event message reads SYSTEM INTEGRITRY RECOVERY 11 when a reboot was required and otherwise MODULE FAILURE 11 when a failure was detected

- *How often the test is performed*: Module dependent.
- *What to do*: Contact the factory and supply the failure code noted in the display. The "xxx" text identifies the failed module (for example, F8L).

7.2.2.3 Minor self-test error messages

Most of the minor self-test errors can be disabled. See the settings in the User-programmable Self-tests section in chapter 5.

MODULE FAILURE___:
Contact Factory (xxx)

- *Latched target message*: Yes.
- *Description of problem*: Module hardware failure detected. Module Failures 12 and 31 to 33 are minor.
- *How often the test is performed*: Module dependent.
- *What to do*: Contact the factory and supply the failure code noted in the display. The "xxx" text identifies the failed module (for example, F8L).

  For Module Failure 31, a new process card hardware is available. The process card hardware has been enhanced to support new features, such as fast distance protection, Synchrophasors Frequency, and Rate of Change of Frequency calculations to conform to C37.118 - 2005 standard. The new functionality leveraging the hardware is supported with firmware revision 7.25 and above. When using an older revision of the process card with a new firmware revision (7.25), Module Failure 31 indicates the limited functionality. If your application requires the new functionality, then new process card hardware is required and otherwise you can continue using the existing hardware. To know the revision of your hardware, contact the factory.

MAINTENANCE ALERT:
Replace Battery

- *Latched target message*: Yes.
- *Description of problem*: The battery is weak or not functioning. It powers the real time clock. This message displays as Battery Fail in the event records. When the battery weakness reaches a critical level, the message displays persistently on the front panel and no front panel key navigation is possible.
- *How often the test is performed*: The battery is monitored every five seconds. The error message displays after 60 seconds if the problem persists.
- *What to do*: Replace the battery as outlined in the Maintenance chapter.

MAINTENANCE ALERT:
Direct I/O Ring Break

- *Latched target message*: No.
- *Description of problem*: Direct input and output settings are configured for a ring, but the connection is not in a ring.
- *How often the test is performed*: Every second.
- *What to do*: Check direct input and output configuration and wiring.

MAINTENANCE ALERT:
Bad IRIG-B Signal

- *Latched target message*: No.
- *Description of problem*: A bad IRIG-B input signal has been detected.
- *How often the test is performed*: Monitored whenever an IRIG-B signal is received.
- *What to do*: Ensure the following:
  - The IRIG-B cable is properly connected.
  - Proper cable functionality (that is, check for physical damage or perform a continuity test).
  - The IRIG-B receiver is functioning.
  - Check the input signal level (it can be less than specification).

  If none of these apply, then contact the factory.

MAINTENANCE ALERT:
****Bad PTP Signal****

- *Latched target message*: No.
- *Description of problem*: No PTP enabled port has good PTP signal input.
- *How often the test is performed*: Activated when no acceptable signal is being received.
- *What to do*: Ensure the following:
  - The Ethernet cable(s) are properly connected.
  - At least one PTP grandmaster-capable clock is functioning.
  - If a strict power profile (PP) is enabled, that entire network is PP compliant.
  - The network is delivering PTP messages to the relay.

MAINTENANCE ALERT:
SNTP Failure

- *Latched target message*: No.
- *Description of problem*: The SNTP server is not responding.
- *How often the test is performed*: Every 10 to 60 seconds.
- *What to do*: Check that Ethernet cable(s) are properly connected. Check that configuration for the SNTP server corresponds to the actual server settings. Check connectivity to the server (ping the server IP address).

MAINTENANCE ALERT:
4L Discrepancy

- *Latched target message*: No.
- *Description of problem*: A discrepancy has been detected between the actual and desired state of a latching contact output of an installed type "4L" module.
- *How often the test is performed*: Upon initiation of a contact output state change.
- *What to do*: Verify the state of the output contact and contact the factory if the problem persists.

MAINTENANCE ALERT:
GGIO Ind xxx oscill

- *Latched target message*: No.
- *Description of problem*: A data item in a configurable GOOSE data set is oscillating.
- *How often the test is performed*: Upon scanning of each configurable GOOSE data set.
- *What to do*: The "xxx" text denotes the data item that has been detected as oscillating. Evaluate all logic pertaining to this item.

DIRECT I/O FAILURE:
COMM Path Incomplete

- *Latched target message*: No.
- *Description of problem*: A direct device is configured but not connected.
- *How often the test is performed*: Every second.
- *What to do*: Check direct input and output configuration and wiring.

RxGOOSE FAIL:
Missing messages

- *Latched target message*: No.
- *Description of problem*: One or more RxGOOSE messages are not being received.
- *How often the test is performed*: The self-test is activated when no message is received within the expected time interval, which is the time-to-live time in the previous message. This time can be from milliseconds to minutes.
- *What to do*: Check GOOSE setup.

RXGOOSE OFFLINE:
COMM Path Incomplete

- *Latched target message*: No.
- *Description of problem*: One or more GOOSE devices are not responding.
- *How often the test is performed*: Event driven. The test is performed when a device programmed to receive GOOSE messages stops receiving. This can be from 1 to 60 seconds, depending on GOOSE packets.
- *What to do*: Check GOOSE setup.

AGGREGATOR ERROR:

- *Latched target message*: No.
- *Description of problem*: The second line of this self-test error indicates the problem with the PMU Aggregator.
- *How often the test is performed*: Each time a PMU's related settings is changed.
- *What to do*: Correct the problem indicated in the second line or contact the factory.

TEMP MONITOR:
OVER TEMPERATURE

- *Latched target message*: Yes.
- *Description of problem*: The ambient temperature is greater than the maximum operating temperature (+80°C).
- *How often the test is performed*: Every hour.
- *What to do*: Remove the F60 from service and install in a location that meets operating temperature standards.

SYSTEM EXCEPTION:
Press RESET Key

- *Latched target message*: Yes.
- *Description of problem*: Abnormal restart from modules being removed or inserted while the F60 is powered-up, when there is an abnormal DC supply, or as a result of internal relay failure.
- *How often the test is performed*: Event driven.
- *What to do*: Contact the factory.

FIRST ETHERNET FAIL

SECOND ETHERNET FAIL

THIRD ETHERNET FAIL

- *Latched target message*: Yes.
- *Description of problem*: A link loss detection on an Ethernet port. The link loss is due to unplugging the cable or the switch port being down.
- *How often the test is performed*:
- *What to do*: Check the connection.

WRONG TRANSCEIVER

- *Latched target message*: Yes.
- *Description of problem*: The type of SFP does not match the CPU type.

  T-type CPU = All ports support fiber SFPs only

  U-type CPU = Maintenance port needs RJ45 SFP and the other two ports fiber SFPs

  V-type CPU = All ports support RJ45 SFPs only
- *What to do*: A web page "SFP Transceiver Information" is provided. This page displays the type of the SFP in it. This data is to be used with the CPU type to know the cause of the problem.

SFP MODULE x FAIL

- *Latched target message*: No.
- *Description of problem*: A faulty SFP or unplugging the SFP would generate this self test.
- *What to do*: The web page "SFP Transceiver Information" described in the previous section applies for this self test as well. The "SFP Module Fail" has higher priority and it suppresses the "Ethernet Fail" target message. The "SFP MODULE FAIL FUNCTION" setting enables/disables this self test. The target for this self test is priority-based, with the third one being the highest priority. For example, if all three SFP modules fail, then the third SFP target is activated. If the third SFP module failure resolves, then the second SFP target is activated.

AUTHENTICATION FAIL

- *Latched target message*: No.
- *Description of problem*: The number of failures threshold was exceeded.
- *What to do*: Wait for the lockout interval and try to authenticate again.

FIRMWARE LOCK

- *Message*: "Unauthorized firmware attempt"
- *Latched target message*: No.
- *Description of problem*: A firmware upgrade operation was attempted while the lock relay setting was enabled.
- *What to do*: Ask the Supervisor to unlock the relay and try again.

SETTING LOCK

- *Message*: "Unauthorized setting write"
- *Latched target message*: No.
- *Description of problem*: A setting write was attempted while the lock relay setting was enabled.
- *What to do*: Ask the Supervisor to unlock the settings and try again.

SERVER UNAVAILABLE

- *Message*: "An attempt to contact the Radius server has failed"
- *Latched target message*: No.
- *Description of problem*: The RADIUS authentication server is unavailable.
- *What to do*: Verify network connectivity and try again.

STORAGE MEDIA ALARM:
Self Test Error

- *Description of problem*: The CPU module fails to read from or write to the Compact Flash (CF) card inside the module. The CF card stores certain non-volatile data, such as event records, oscillography and datalogger records, fault report values, and non-volatile actual values. Settings are not stored in CF and hence are unaffected by this self-test.
- *Latched target message*: No.
- *How often the test is performed*: On power up. Afterwards, every time the CPU accesses the CF card for reading or writing.
- *What to do*: Contact the factory.

RRTD COMM FAIL:
Self Test Error

- *Description of problem*: Communications with remote RTD unit (RRTD) or GPM-F failed for longer than 10 seconds.
- *Latched target message*: No.
- *How often the test is performed*: Runs only if "Com2 Usage" is set to RRTD or RRTD&GPM-F. Checked every five seconds.
- *What to do*: Check COM2 port settings, check RS485 cables.

VOLTAGE MONITOR:
with 2nd line detail

- *Description of problem*: The relay detected a problem with the internal voltage rails for longer than 25 seconds.
- *Latched target message*: Yes.
- *How often the test is performed*: Every five seconds.
- *What to do*: Contact GE customer service.

7.2.2.4 HardFiber self-test error messages

In addition to those provided by the standard UR-series devices, the UR devices implement HardFiber self-tests. These are listed here. Any abnormal diagnostic condition indicated by the LEDs or the critical failure relay also results in a self-test message, so troubleshooting is described here. For other relays, such at the B95^{Plus}, see that product's instruction manual.

Equipment mismatch major self-test

- *Description of problem*: The number or type of installed hardware modules does not match the order code stored in the CPU. The standard UR-series Equipment Mismatch self-test is extended to cover the possible presence of a Process Card.
- *Severity*: Protection is not available and all contact outputs and shared outputs are de-asserted.
- *What to do*: Check all modules against the order code. Ensure they are inserted properly, and cycle the control power. If a module has intentionally been added or removed use the Update Order Code command to notify the relay that the current module configuration is correct.

Module failure major self-test

- *Description of problem*: UR-series device module hardware failure detected.

- *Severity*: Protection is not available and all contact outputs and shared outputs are de-asserted.
- *What to do*: Contact the factory and supply the failure code noted in the display. Text in the message identifies the failed module (for example, H81). If operated on a Process Card failure, the Module Fail self-test seals-in (latches) till the UR-series device is restarted.

Process bus failure major self-test

- *Description of problem*: Mission critical data is not available via the process bus. An AC quantity is considered critical if both AC bank origins and the crosschecking settings are other than none. This self-test is also initiated by an AC input discrepancy being detected. See the description of the crosschecking setting in this manual for further information. In addition, this self-test can be initiated by user logic responding to loss of critical contact input/output or other data using the Process Bus Failure Operand user-programmable self-test setting. This setting is located in the **Settings > Product Setup > User-Programmable Self Test** menu.
- *Severity*: Protection is not available and all contact outputs and shared outputs are de-asserted.
- *What to do*: First rectify any Process Bus Trouble and Brick Trouble self-test errors. Check the actual value of the operand referenced by the Process Bus Failure Operand setting, and if "On," determine the cause and rectify.

  If the problem persists with the foregoing all clear, the cause must be an AC input discrepancy, which is typically the result of problems in the input signals to the Bricks, or faults in the Brick input conditioning hardware. If the error was annunciated the first time significant signal was encountered, suspect the former cause and check the copper connections external to the Brick. Where multiple UR-series devices have self-test errors, look for common causes.

  To further isolate AC input discrepancy errors, put the relay in test-isolated mode, then one by one, temporally change an AC bank crosschecking setting to none, until the Process Bus Failure clears. Once the problem AC bank has been identified, the values from each of the two Bricks can be examined individually by temporarily mapping each to an AC bank with a single origin.

Process bus trouble minor self-test

- *Description of problem*: Communications problems with one or more Bricks. The text of the message identifies the affected field units. This self-test is initiated by low received signal levels at either the Brick or Process Card end, and by the sustained failure to receive poll responses from the proper Brick.
- *Severity*: This self-test error does not directly inhibit protection. However, the affected Brick inputs/outputs may not be available to the UR-series device.
- *What to do*: Check the field unit actual values. An indication of equipment mismatch means that messages are being received from a Brick, but there is a discrepancy between the settings and the actual Brick serial number, order code, and/or core number. Check that the correct core on the correct Brick is patched through to the correct Process Card port, and that the field unit settings are correct. An indication of communications loss means that no messages are being received. Check that the patching is correct, and that the Brick has power. If that is not the problem, use a professional optical fiber connector cleaning kit to clean both sides of all optical fiber connections from the Process Card through to the affected Brick. If the problem continues after cleaning, consult the factory.

Brick trouble minor self-test

- *Description of problem*: Brick internal self-testing has detected a trouble internal to the Brick.
- *Severity*: This self-test error does not directly inhibit protection. However, some or all of the affected Brick inputs/outputs may not be available to the UR-series device.
- *What to do*: Check the Brick environment for over/under temperatures and the voltage of its power source. If the ambient temperature and supply voltage are within Brick specifications, consult the factory. Troubles resulting from a Brick output failing to respond to an output command can only be detected while the command is active, and so in this case the target is latched. A latched target can be unlatched by pressing the faceplate reset key if the command has ended, however the output can still be non-functional.

F60 Feeder Protection System

Chapter 8: Commissioning

This chapter outlines how to test frequency timing.

8.1 Testing

8.1.1 Testing underfrequency and overfrequency elements

Underfrequency and overfrequency protection requires techniques with subtle testing implications. Whereas most protection is designed to detect changes from normal to fault conditions that occur virtually instantaneously, power system inertia requires frequency protection to pick up while the frequency is changing slowly. Frequency measurement is inherently sensitive to noise, making high precision in combination with high speed challenging for both relays and test equipment.

Injection to a particular F60 frequency element must be to its configured source and to the channels that the source uses for frequency measurement. For frequency measurement, a source uses the first quantity configured in the following order:

1. Phase voltages
2. Auxiliary voltage
3. Phase currents
4. Ground current

For example, if auxiliary voltage and phase currents are configured, the source uses the auxiliary voltage, not the phase voltages or any of the currents.

When phase voltages or phase currents are used, the source applies a filter that rejects the zero-sequence component. As such, the same signal must not be injected to all three phases, or the injected signal is completely filtered out. For an underfrequency element using phase quantities, the phase A signal must be above the **MIN VOLT/AMP** setting value. Therefore, either inject into phase A only, or inject a balanced three-phase signal.

Figure 8-1: Typical underfrequency element test timing

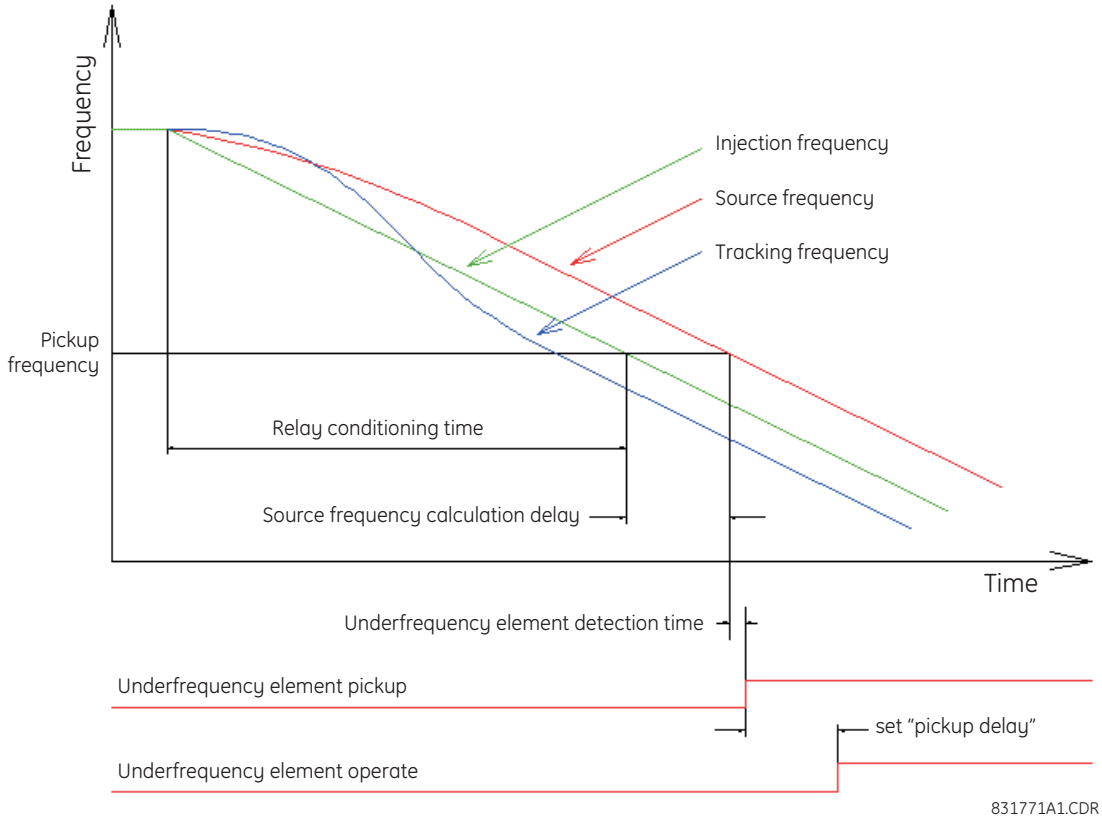

The static accuracy of the frequency threshold is determined by slowly adjusting the frequency of the injected signal about the set pickup. If the F60 frequency metering feature is used to determine the injected frequency, verify the metering accuracy by checking it against a known standard (for example, the power system).

To accurately measure the time delay of a frequency element, a test emulating realistic power system dynamics is required. Let the injected frequency ramp smoothly through the set threshold, with the ramp starting frequency sufficiently outside the threshold so that the relay becomes conditioned to the trend before operation. For typical interconnected power systems, the recommended testing ramp rate is 0.20 Hz/s.

The required delay time is the interval from the point the frequency crosses the set threshold to the point that the element operates. Some test sets can measure only the time from the ramp start to element operation, necessitating the subtraction of the pre-threshold ramp time from the reading. For example, with a ramp rate of 0.20 Hz/s, start the ramp 0.20 Hz before the threshold and subtract 1 second from the test set time reading of ramp start to relay operation.

Note that the F60 event records only show the "pickup delay" component, a definite time timer. This is exclusive of the time taken by the frequency responding component to pickup.

F60 oscillography can be used to measure the time between the calculated source frequency crossing the threshold and element operation; however, this method omits the delay in the calculated source frequency. The security features of the source frequency measurement algorithm result in the calculated frequency being delayed by two to four cycles (or longer with noise on the input). In addition, oscillography resolution is 0.004 Hz, which at 0.20 Hz/s corresponds to a delay of 20 ms. Do not use the tracking frequency in timing measurements, as its algorithm involves phase locking, which purposely sets its frequency high or low to allow the F60 sample clock to catch-up or wait as necessary to reach synchronism with the power system.

F60 Feeder Protection System

Chapter 9: Theory of operation

This chapter outlines advanced information on operation.

9.1 High-impedance (Hi-Z) fault detection

9.1.1 Description

The Hi-Z element accomplishes high-impedance fault detection using a variety of algorithms, all coordinated by an expert system. At the heart of the high-impedance fault-detection system is the identification of arcing on a feeder. If the Hi-Z element detects arcing, it then determines whether or not the arcing persists for a significant period of time. If it does, the Hi-Z element determines whether the persistent arcing is from a downed conductor or from an intact conductor and then generates an output to indicate either the detection of a downed conductor or the detection of arcing, respectively.

Distinction between an arcing intact conductor and an arcing downed conductor is determined by looking at patterns in the load current at the beginning of the fault. A downed conductor is indicated when a precipitous loss of load or an overcurrent condition precedes arcing detection. Otherwise, the Hi-Z element assumes that the line is intact, even if arcing is present. In such a case, if the detected arcing can be classified as persistent, and an output contact is configured for 'arcing detected,' the Hi-Z element closes that contact.

In some cases, arcing is determined to be present, but not persistent. For example, when it is caused by tree limb contact or insulator degradation, arcing typically is present intermittently with relatively long periods of inactivity (such as minutes) interspersed. In such cases, arcing can be affected by such factors as the motion of a tree limb or the moisture and contamination on an insulator. Conditions such as these, characterized by a high number of brief occurrences of arcing over an extended period of time (for example from a fraction of an hour to one or two hours), lead the Hi-Z element to recognize and flag an “arcing suspected” event. None of these brief occurrences of arcing, if taken individually, are sufficient to indicate detection of a downed conductor or to set off an alarm indicating that persistent arcing has been detected. When considered cumulatively, however, they do indicate a need for attention. If an output contact is configured to indicate 'arcing suspected,' the Hi-Z element recognition of such sporadic arcing closes that contact and appropriate actions can be taken.

If the Hi-Z element determines that a downed conductor exists, oscillography and fault data are captured. In addition, target messages and appropriate LEDs are activated on the relay faceplate.

The detection of a downed conductor or arcing condition is accomplished through the following algorithms:

- Energy algorithm
- Randomness algorithm
- Expert Arc Detector algorithm

- Load Event Detector algorithm
- Load Analysis algorithm
- Load Extraction algorithm
- Arc Burst Pattern Analysis algorithm
- Spectral Analysis algorithm
- Arcing-Suspected Identifier algorithm
- Even Harmonic Restraint algorithm
- Voltage Supervision algorithm

The following sections explain the algorithms.

9.1.2 Energy algorithm

The Energy algorithm monitors a specific set of non-fundamental frequency component energies of phase and neutral current. After establishing an average value for a given component energy, the algorithm indicates arcing if it detects a sudden, sustained increase in the value of that component. The Hi-Z element runs the Energy algorithm on each of the following parameters for each phase current and for the neutral:

- Even harmonics
- Odd harmonics
- Non-harmonics

On a 60 Hz system, the non-harmonic component consists of a sum of the 30, 90, 150,..., 750 Hz components, while on a 50 Hz system, it consists of a sum of the 25, 75, 125,..., 625 Hz components. If the Energy algorithm detects a sudden, sustained increase in one of these component energies, it reports this to the Expert Arc Detector algorithm, resets itself, and continues to monitor for another sudden increase.

9.1.3 Randomness algorithm

The Randomness algorithm monitors the same set of component energies as the Energy algorithm but differs slightly. Rather than checking for a sudden, sustained increase in the value of the monitored component energy, it looks for a sudden increase in a component followed by highly erratic behavior. This type of highly erratic behavior is indicative of many arcing faults. Just as with the Energy algorithm, if the Randomness algorithm detects a suspicious event in one of its monitored components, it reports it to the Expert Arc Detector algorithm, resets itself, and continues to monitor for another suspicious event.

9.1.4 Expert Arc Detector algorithm

The Expert Arc Detector algorithm assimilates the outputs of the basic arc detection algorithms into one "arcing confidence" level per phase. Note that there are actually 24 independent basic arc detection algorithms, since both the Energy algorithm and the Randomness algorithm are run for the even harmonics, odd harmonics, and non-harmonics for each phase current and for the neutral. The assimilation performed by the Expert Arc Detector algorithm, then, is accomplished by counting the number of arcing indications determined by any one of the 24 algorithms over a short period of time (for example the last 30 seconds). Also taken into account is the number of different basic algorithms that indicate arcing.

In the Expert Arc Detector algorithm, the arcing confidence level for each phase increases as the number of basic algorithms that indicate arcing (per phase) increases. It also increases with increasing numbers of indications from any one basic algorithm. These increases in confidence levels occur because multiple, consecutive indications from a given algorithm and indications from multiple independent algorithms are more indicative of the presence of arcing than a single algorithm giving a single indication.

9.1.5 Spectral Analysis algorithm

The Spectral Analysis algorithm is the third and final confirmation algorithm performed only when a high impedance condition is suspected.

The Spectral Analysis algorithm receives five seconds of averaged non-harmonic residual current spectrum data and compares it to an ideal 1 / f curve. Depending on the result, three percent can be added to the arcing confidence level generated by the Expert Arc Detector algorithm.

9.1.6 Load Event Detector algorithm

The Load Event Detector algorithm examines, on a per-phase basis, one reading of RMS values per two-cycle interval for each phase current and the neutral. It then sets flags for each phase current and for the neutral based on the following events:

- An overcurrent condition
- A precipitous loss of load
- A high rate-of-change
- A significant three-phase event
- A breaker open condition

These flags are examined by the Load Analysis algorithm. Their states contribute to that algorithm's differentiation between arcing downed conductors and arcing intact conductors, and inhibit the Expert Arc Detector algorithm from indicating the need for an arcing alarm for a limited time following an overcurrent or breaker open condition.

Any of these five flags zero the Expert Arc Detector buffer, since the power system is in a state of change and the values being calculated for use by the Energy and Randomness algorithms are probably not valid.

An extremely high rate of change is not characteristic of most high impedance faults and is more indicative of a breaker closing, causing associated inrush. Since this type of inrush current causes substantial variations in the harmonics used by the high impedance algorithms, these algorithms ignore all data for several seconds following a high rate-of-change event that exceeds the associated rate-of-change threshold, in order to give the power system a chance to stabilize.

9.1.7 Load Analysis algorithm

The Load Analysis algorithm differentiates between arcing downed conductors and arcing intact conductors by looking for a precipitous loss of load and/or an overcurrent disturbance at the beginning of an arcing episode. The presence of arcing on the system is determined based on the output of the Expert Arc Detector algorithm. If the Hi-Z element finds persistent arcing on the power system, the Load Analysis algorithm then considers the type of incident that initiated the arcing and classifies the arcing conductor as either downed or intact. Another function of the algorithm is to provide coordination between the Hi-Z element and the power system's conventional overcurrent protection by observing a timeout, via the **HI-Z OC PROTECTION COORD TIMEOUT** setting from the beginning of the arcing before giving an indication of arcing.

If the Load Analysis algorithm determines that a downed conductor or arcing exists, it attempts to determine the phase on which the high impedance fault condition exists. It does this in a hierarchical manner. First, if a significant loss of load triggered the Load Analysis algorithm, and if there was a significant loss on only one phase, that phase is identified. If there was not a single phase loss of load, and if an overcurrent condition on only one phase triggered the algorithm, that phase is identified. If both of these tests fail to identify the phase, the phase with a significantly higher confidence level (for example higher than the other two phases by at least 25%) is identified. Finally, if none of these tests provides phase identification, the result of the Arc Burst Pattern Analysis algorithm is checked. If that test fails, the phase is not identified.

9.1.8 Load Extraction algorithm

The Load Extraction algorithm attempts to find a quiescent period during an arcing fault so that it can determine the background load current level in the neutral current. If it is successful in doing so, it then removes the load component from the total measured current, resulting in a signal that consists only of the fault component of the neutral current. This information is then provided as input to the Arc Burst Pattern Analysis algorithm.

9.1.9 Arc Burst Pattern Analysis algorithm

The Arc Burst Pattern Analysis algorithm attempts to provide faulted phase identification information based on a correlation between the fault component of the measured neutral current and the phase voltages. The phase identified is the one whose phase voltage peak lines up with the neutral current burst. The fault component is received from the Load Extraction algorithm. The result of the analysis is checked by the Load Analysis algorithm if its other phase identification methods prove unsuccessful.

9.1.10 Arcing Suspected algorithm

The purpose of the Arcing Suspected algorithm is to detect multiple, sporadic arcing events. If taken individually, such events are not sufficient to warrant an arcing alarm. When taken cumulatively, however, these events do warrant an alarm to system operators so that the cause of the recurrent arcing can be investigated.

9.1.11 Overcurrent disturbance monitoring

This function is part of High Impedance Fault Detection and is not be confused with conventional overcurrent protection. The Hi-Z element monitors for an overcurrent condition on the feeder by establishing overcurrent thresholds for the phases and for the neutral and then checking for a single two-cycle RMS current that exceeds those thresholds. Oscillography and fault data are captured if it is determined that an overcurrent condition exists.

9.1.12 Hi-Z Even Harmonic Restraint algorithm

Every two-cycle interval, the algorithm evaluates the even harmonic content of each phase current. The even harmonic content is evaluated as a percentage of the phase RMS current. If for any phase the percentage is greater than the **HI-Z EVEN HARMONIC RESTRAINT** setting, the algorithm inhibits setting of the overcurrent flags. This is to prevent a cold-load pickup event from starting the Hi-Z logic sequence (which requires the overcurrent flag or the loss-of-load flag to be set at the beginning of an arcing event). The duration over which the algorithm inhibits the setting of the overcurrent flag(s) is from the time the even-harmonic level (as a percentage of RMS) increases above the threshold until one second after it falls back below the threshold.

9.1.13 Hi-Z Voltage Supervision algorithm

This algorithm was implemented to minimize the probability of a false Hi-Z indication due to bus voltage dips, for example from parallel feeder faults. A fault on a parallel line can cause voltage dips that produce a decrease in the line load that can be mistaken by the Hi-Z element as Loss of Load.

Every two cycles, the voltage on each phase is checked against the **HI-Z V SUPV THRESHOLD**. If the voltage on any phase has dropped by a percentage greater than or equal to this setting, the Loss of Load flag is blocked. The blocking is not done on a per-phase basis. If one phase voltage shows a dip, the block is applied for all phases. Also the High Impedance Oscillography records that a voltage dip was experienced. The Oscillography record is phase-specific.

9.2 Fault locator

9.2.1 Fault type determination

Fault type determination is required for calculation of fault location. The algorithm uses the angle between the negative and positive sequence components of the relay currents. To improve accuracy and speed of operation, the fault components of the currents are used; that is, the pre-fault phasors are subtracted from the measured current phasors. In addition to the angle relationships, certain extra checks are performed on magnitudes of the negative and zero-sequence currents.

The single-ended fault location method assumes that the fault components of the currents supplied from the local (A) and remote (B) systems are in phase. The figure shows an equivalent system for fault location.

Figure 9-1: Equivalent system for fault location

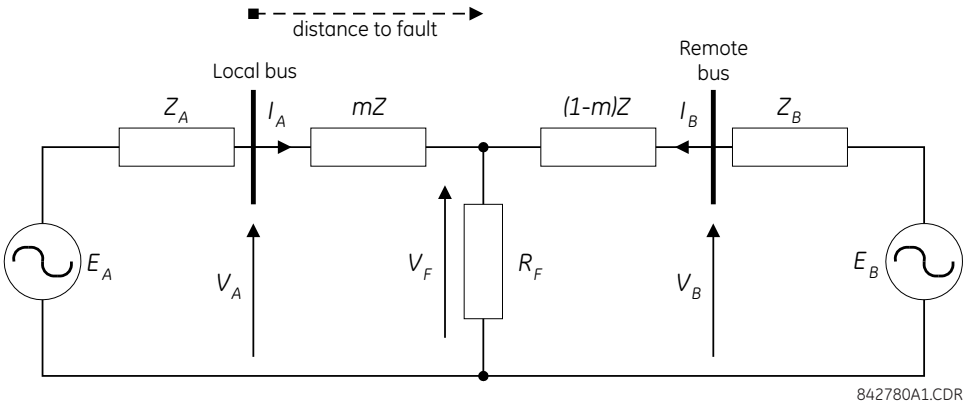

The following equations hold true for this equivalent system.

$$V_A = m \cdot Z \cdot I_A + R_F \cdot (I_A + I_B) \quad \textbf{Eq. 9-1}$$

where

m = sought pu distance to fault
Z = positive sequence impedance of the line

The currents from the local and remote systems can be parted between their fault (F) and pre-fault load (pre) components:

$$I_A = I_{AF} + I_{Apre} \quad \textbf{Eq. 9-2}$$

and neglecting shunt parameters of the line:

$$I_B = I_{BF} - I_{Apre} \quad \textbf{Eq. 9-3}$$

Inserting the I_A and I_B equations into the V_A equation and solving for the fault resistance yields:

$$R_F = \frac{V_A - m \cdot Z \cdot I_A}{I_{AF} \cdot \left(1 + \frac{I_{BF}}{I_{AF}}\right)} \quad \textbf{Eq. 9-4}$$

Assuming the fault components of the currents, I_{AF} and I_{BF} are in phase, and observing that the fault resistance, as impedance, does not have any imaginary part gives:

$$\mathrm{Im}\left(\frac{V_A - m \cdot Z \cdot I_A}{I_{AF}}\right) = 0 \quad \textbf{Eq. 9-5}$$

where Im() represents the imaginary part of a complex number. Solving this equation for the unknown m creates the following fault location algorithm:

$$m = \frac{\mathrm{Im}(V_A \cdot I_{AF}^*)}{\mathrm{Im}(Z \cdot I_A \cdot I_{AF}^*)} \quad \textbf{Eq. 9-6}$$

where * denotes the complex conjugate and $I_{AF} = I_A - I_{Apre}$.

Depending on the fault type, appropriate voltage and current signals are selected from the phase quantities before applying the preceding two equations (the superscripts denote phases, the subscripts denote stations).

For AG faults:

$$V_A = V_A^A, \quad I_A = I_A^A + K_0 \cdot I_{0A}, \quad I_{AF} = I_A^A - I_{Apre}^A \quad \textbf{Eq. 9-7}$$

For BG faults:

$$V_A = V_A^B, \quad I_A = I_A^B + K_0 \cdot I_{0A}, \quad I_{AF} = I_A^B - I_{Apre}^B \quad \textbf{Eq. 9-8}$$

For CG faults:

$$V_A = V_A^C, \quad I_A = I_A^C + K_0 \cdot I_{0A}, \quad I_{AF} = I_A^C - I_{Apre}^C \qquad \textbf{Eq. 9-9}$$

For AB and ABG faults:

$$V_A = V_A^A - V_A^B, \quad I_A = I_A^A - I_A^B \qquad \textbf{Eq. 9-10}$$

For BC and BCG faults:

$$V_A = V_A^B - V_A^C, \quad I_A = I_A^B - I_A^C \qquad \textbf{Eq. 9-11}$$

For CA and CAG faults:

$$V_A = V_A^C - V_A^A, \quad I_A = I_A^C - I_A^A \qquad \textbf{Eq. 9-12}$$

where K_0 is the zero sequence compensation factor (for the first six equations).

For ABC faults, all three AB, BC, and CA loops are analyzed and the final result is selected based upon consistency of the results.

The element calculates the distance to the fault (with m in miles or kilometers) and the phases involved in the fault.

The relay allows locating faults from delta-connected VTs. If the **FAULT REPORT 1 VT SUBSTITUTION** setting is set to "None," and the VTs are connected in wye, the fault location is performed based on the actual phase to ground voltages. If the VTs are connected in delta, fault location is suspended.

If the **FAULT REPORT 1 VT SUBSTITUTION** setting value is "V0" and the VTs are connected in a wye configuration, the fault location is performed based on the actual phase to ground voltages. If the VTs are connected in a delta configuration, fault location is performed based on the delta voltages and externally supplied neutral voltage:

$$\begin{aligned} V_A &= \frac{1}{3}(V_N + V_{AB} - V_{CA}) \\ V_B &= \frac{1}{3}(V_N + V_{BC} - V_{AB}) \\ V_B &= \frac{1}{3}(V_N + V_{CA} - V_{BC}) \end{aligned} \qquad \textbf{Eq. 9-13}$$

If the **FAULT REPORT 1 VT SUBSTITUTION** setting value is "I0" and the VTs are connected in a wye configuration, the fault location is performed based on the actual phase to ground voltages. If the VTs are connected in a delta configuration, fault location is performed based on the delta voltages and zero-sequence voltage approximated based on the zero-sequence current:

$$\begin{aligned} V_A &= \frac{1}{3}(V_{AB} - V_{CA}) - Z_{SYS0} I_0 \\ V_B &= \frac{1}{3}(V_{BC} - V_{AB}) - Z_{SYS0} I_0 \\ V_B &= \frac{1}{3}(V_{CA} - V_{BC}) - Z_{SYS0} I_0 \end{aligned} \qquad \textbf{Eq. 9-14}$$

where Z_{SYS0} is the equivalent zero-sequence impedance behind the relay as entered under the fault report setting menu.

Figure 9-2: Fault locator scheme

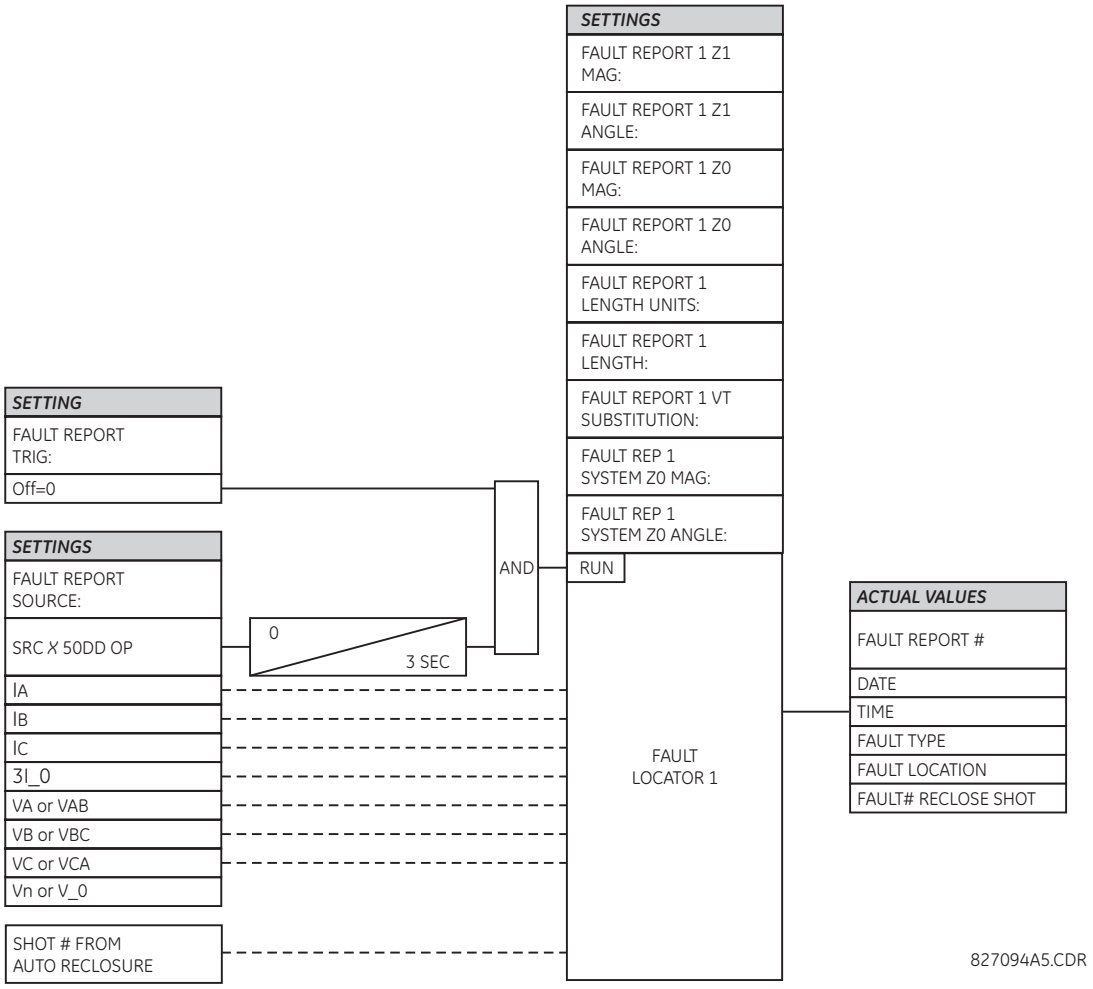

F60 Feeder Protection System

Chapter 10: Maintenance

This chapter outlines maintenance, repair, storage, and disposal of the hardware and software.

10.1 General maintenance

The F60 requires minimal maintenance. As a microprocessor-based relay, its characteristics do not change over time. Expected service life is 20 years for UR devices manufactured June 2014 or later when applied in a controlled indoors environment and electrical conditions within specification.

While the F60 performs continual self-tests, it is recommended that maintenance be scheduled with other system maintenance. This maintenance can involve in-service, out-of-service, or unscheduled maintenance.

10.1.1 In-service maintenance

1. Visual verification of the analog values integrity, such as voltage and current (in comparison to other devices on the corresponding system).
2. Visual verification of active alarms, relay display messages, and LED indications.
3. LED test.
4. Visual inspection for any damage, corrosion, dust, or loose wires.
5. Event recorder file download with further events analysis.

10.1.2 Out-of-service maintenance

1. Check wiring connections for firmness.
2. Analog values (currents, voltages, RTDs, analog inputs) injection test and metering accuracy verification. Calibrated test equipment is required.
3. Protection elements setting verification (analog values injection or visual verification of setting file entries against relay settings schedule).
4. Contact inputs and outputs verification. This test can be conducted by direct change of state forcing or as part of the system functional testing.
5. Visual inspection for any damage, corrosion, or dust.
6. Event recorder file download with further events analysis.
7. LED Test and pushbutton continuity check.

NOTICE To avoid deterioration of electrolytic capacitors, power up units that are stored in a de-energized state once per year, for one hour continuously.

10.1.3 Unscheduled maintenance (system interruption)

1. View the event recorder and oscillography or fault report for correct operation of inputs, outputs, and elements.

10.2 Back up and restore settings

Back up a copy of the in-service settings for each commissioned UR device, so as to revert to the commissioned settings after inadvertent, unauthorized, or temporary setting changes are made, after the settings defaulted due to firmware upgrade, or when the device has to be replaced. This section describes how to backup settings to a file and how to use that file to restore the settings to the original relay or to a replacement relay.

10.2.1 Back up settings

UR device settings can be saved in a backup URS file using the EnerVista UR Setup software. The URS file is the standard UR settings file. For an introduction to settings files in the URS format, see the beginning of the Interfaces chapter. When the IEC 61850 option is present, the settings can alternatively be saved in a backup IID file either using the EnerVista UR Setup software in online mode or by using any of the supported file transfer protocols. The IID file is one of several IEC 61850 Substation Configuration Language (SCL) file types; see the IEC 61850 chapter in the UR Series Communications Guide for an introduction to SCL.

"TBD" displays when a setting in a modeled element is configured with a non-modeled operand. For example, Phase IOC is modeled in a firmware release, while the LED operands are not modeled. If the block setting of the Phase IOC is configured with LED operands, its displays as TBD in IID and CID files, the web interface, or in an MMS client.

The options that display in the EnerVista software when right-clicking depend on device options.

To save a settings file in the URS format:

1. In EnerVista, connect to the device in the Online Window area.
2. Right-click the device name in the Online Window area and select **Read Device Settings**. A window opens.
3. Select or enter a file name and location, and click the **Receive** button. A .urs file is created in the Offline Window area.

To save settings in the IID format in EnerVista:

1. In EnerVista, connect to the device in the Online Window area.
2. Right-click the device name in the Online Window area and select **Read IID File**. The option is not present when the device does not have the IEC 61850 option. A window opens when successful.
3. Select or enter a file name and location, and click the **Receive** button. A .iid file is created.

To save settings in the IID format using TFTP:

1. On a computer on the same subnetwork as the UR device, open a command window.
2. Enter

   ```
   TFTP <IP address> GET ur.iid <destination>
   ```

   where

   <IP address> is the IP address of the UR device
   ur.iid is the internal name of the IID file in the UR device
   <destination> is the path and file name of the IID file. If omitted, the file is saved as ur.iid in the command window default directory.

   An example is

```
TFTP 192.168.1.101 GET ur.iid Feeder1.iid
```

10.2.2 Restore settings

UR device settings can be restored to the values they were at when a URS backup file was created using the EnerVista UR Setup software. When the IEC 61850 option is present, the settings can alternatively be to the values they were at when an IID type backup was created either using the EnerVista UR Setup software in online mode or by using any of the supported file transfer protocols. Note that TFTP cannot be used here, as TFTP "put" mode is disabled for security reasons.

To restore completely, a few settings need to be entered manually either via EnerVista UR Setup or via the UR device front panel. If the restore operation is to be via Ethernet, first the UR device must have its IP address settings entered via the front panel. These are located at **SETTINGS ⇨ PRODUCT SETUP ⇨⇩ COMMUNICATIONS ⇨⇩ NETWORK 1(3)** and **SETTINGS ⇨ PRODUCT SETUP ⇨⇩ COMMUNICATIONS ⇨⇩ IPv4 ROUTE TABLE 1(6) ⇨ DEFAULT IPv4 ROUTE ⇨ GATEWAY ADDRESS**.

When importing a file, it cannot have a blank numeric value. All numeric values must be non-blank, otherwise the file is rejected.

To restore settings from a URS file:

1. In EnerVista, connect to the device in the Online Window area.
2. Right-click the .urs file in the Offline Window area and select **Add Existing Settings File** to locate a file, and/or drag-and-drop the file from the Offline Window area to the device in the Online Window area.

Figure 10-1: Restoring a URS settings file

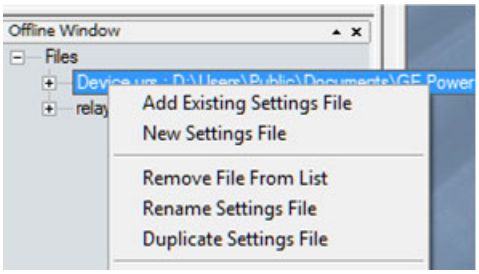

3. Manually copy the remaining settings, outlined as follows.

To restore settings from an IID file using EnerVista software:

1. In Windows, make a copy of the .iid backup file, and change the extension to .cid on the new copy.
2. In the Online Window area of the UR EnerVista Setup software, connect to the device to establish communication.
3. In the Offline Window area, right-click **Files** and select **Import Contents From SCD/CID**.

Figure 10-2: Importing a CID file

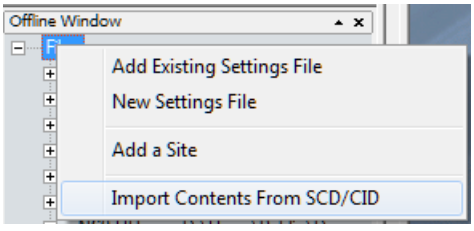

4. Navigate to and select the file with .cid extension. When prompted, enter a file name to give to an intermediate URS file. The URS file is added to the Offline Window area.
5. Drag the imported file in the Offline Window to the device in the Online Window.
6. Manually copy the remaining settings, outlined as follows.

To restore settings from an IID using SFTP:

1. Close EnerVista UR Setup software.
2. In Windows, make a copy of the .iid backup file, and change the extension to .cid on the new copy.
3. On a computer on the same subnetwork as the UR device, open an SFTP client application, such as WinSCP. Note that TFTP cannot be used here.
4. Use the device's IP address as the host name.
5. If the device has the CyberSentry option, use the User Name of "Administrator" or "Engineer," and the password programmed for the selected role. The default password is "ChangeMe1#" (without quotation marks). Log in to the device.
6. If the device does not have the CyberSentry option, use the User Name of "Setting," and the password programmed for the Setting role. The default password is "ChangeMe1#" (without quotation marks). Log in to the device.
7. Upload the backup file copy with the .cid extension. WinSCP uses drag-and-drop or copy-and-paste for this file transfer.
8. Manually copy the remaining settings, outlined as follows.

To manually copy remaining settings:

1. Settings listed in section 4.1.2 Settings Files are not transferred to the UR device with settings files. Enter them manually either via the front panel or via EnerVista UR Setup software. The values that these settings had at the time the backup was created are contained within the backup file, accessed through EnerVista UR Setup software.

10.3 Upgrade firmware

The firmware of the F60 device can be upgraded, locally or remotely, using the EnerVista software. Instructions are outlined here and in the Help file under the topic “Upgrading Firmware.”

Upgrades are possible for the same release (such as 7.01 to 7.02) and from one firmware version to another (such as 7.2 to 7.3). When upgrading to another firmware version, check the release notes on the GE Multilin website for compatibility.

If you are upgrading from version 7.0 or 7.1 to 7.2 or later, some CPU modules require a new boot version. Update this first.

To upgrade the firmware:

1. If required, download the boot file and/or firmware from http://www.gegridsolutions.com/app/ViewFiles.aspx?prod=urfamily&type=7
   The boot file is a .bin file.
2. Navigate to **Settings > Product Setup > Security** and ensure that the **Remote Setting Authorized** and **Local Setting Authorized** settings are "ON." On the front panel of the device, the path is **Settings ⇨ Product Setup ⇨ Security ⇨⇩ Dual Permission Security Access**.

   If using CyberSentry security, also ensure that the relay and firmware are not locked under the **Settings > Product Setup > Security > Supervisory** settings. A Supervisor role is required for these settings.
3. In EnerVista, back up the device settings by right-clicking the device and selecting **Read Device Settings**. In the window that displays, select an existing file to overwrite, or enter a name for a new settings file and optionally a location for the new file. Click the **Receive** button to start the backup.

   If an "Incompatible device order codes or versions" message displays, it means that you are trying to overwrite a file for another product. You access the **Convert Settings File** option by right-clicking the file in the **Offline Window** area at the lower left.
4. In EnerVista, navigate to **Maintenance > Update Firmware**.

   First select the boot file if applicable, locating the .bin file, and proceed. Restart the device, the EnerVista software, and refresh the order code in EnerVista under the **Device Setup** button.

   To update the firmware, click **Maintenance > Update Firmware**, select the firmware update by locating the file, and proceed with the update.

When asked if upgrading over the Internet, the difference is the flash memory buffer size each time the software sends data to the relay. Yes means that the flash memory buffer size is 256 bytes. No means that it is 1024 bytes, which is faster.

If an "Unable to put relay in flash mode" message displays, set the **Settings > Product Setup > Security > Dual Permission Security Access > Remote Setting Authorized** and **Local Setting Authorized** settings to "ON" and try again.

When the update is finished, restart the device by clicking **Maintenance > Reboot Relay Command**, restart the EnerVista software, and refresh the order code in EnerVista under the **Device Setup** button. As the device is starting up, verify the boot and firmware version, or in EnerVista check them under **Actual Values > Product Info > Firmware Revisions**. The boot version is not the same as the firmware revision, and the firmware revision reflects the UR release, for example firmware revision 7.3 is UR release 7.3.

5. Set the device to "programmed" under **Settings > Product Setup > Installation**.
6. If you changed the **Remote Setting Authorized**, the **Local Setting Authorized** settings, or relay lock settings, return them to their previous settings.
7. To apply any previously saved settings, right-click the saved settings file in the **Offline Window** area and select **Write to Device**.

NOTE

Modbus addresses assigned to firmware modules, features, settings, and corresponding data items (that is, default values, minimum/maximum values, data type, and item size) can change slightly from version to version of firmware. The addresses are rearranged when new features are added or existing features are enhanced or modified. The EEPROM DATA ERROR message displayed after upgrading/downgrading the firmware is a resettable, self-test message intended to inform users that the Modbus addresses have changed with the upgraded firmware. This message does not signal any problems when appearing after firmware upgrades.

10.4 Upgrade software

The latest EnerVista software and firmware can be downloaded from http://www.gegridsolutions.com/app/ViewFiles.aspx?prod=urfamily&type=7

After upgrading, check the version number under **Help > About**. If the new version does not display, try uninstalling the software and reinstalling the new versions.

A message can display in the EnerVista software upon launch that "a device from the environment was not recognized." This means that a device is online and its firmware version conflicts with the software version. In the example shown, a C60 with firmware version 7.5x is online, but the software version is 7.3x. Updating removed incompatible files and changes the device to version 7.3x, after which you need to make the order codes consistent as outlined next.

Figure 10-3: Mismatch in order code between software and device

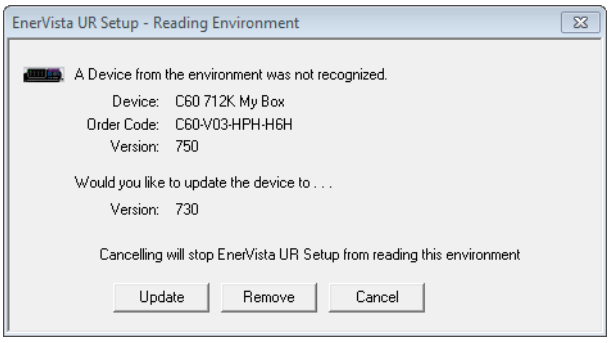

To make the order codes consistent:

1. In EnerVista, click the **Device Setup** button. The window opens.

2. Expand the entry for the UR device.
3. Click the **Read Order Code** button. The order code and version of the device are populated to the software.
4. Click the **OK** button to save the change.

10.5 Replace module

This section outlines how to replace a module.

⚠WARNING **Withdraw or insert a module only when control power has been removed from the unit, and be sure to insert only the correct module type into a slot, else personal injury, damage to the unit or connected equipment, or undesired operation can result.**

NOTICE To avoid damage to the equipment, use proper electrostatic discharge protection (for example, a static strap) when coming in contact with modules while the relay is energized.

The relay, being modular in design, allows for the withdrawal and insertion of modules. Replace modules only with like modules in their original factory configured slots.

To replace a module:

1. Open the enhanced faceplate to the left once the thumb screw has been removed. This allows for easy access of the modules for withdrawal. The new wide-angle hinge assembly in the enhanced front panel opens completely and allows easy access to all modules in the F60.

Figure 10-4: Modules inside relay with front cover open (enhanced faceplate)

842812A1.CDR

The basic faceplate can be opened to the left once the black plastic sliding latch on the right side has been pushed up, as shown below.

Figure 10-5: Removing module (basic faceplate)

842760A1.CDR

2. With power to the unit off, disconnect individually the connections at the front and back of the module before removing the module from the chassis.

   For any Process Card/process bus module in slot H for use with a HardFiber Brick, also remove the two screws at the back that attach the module to the chassis.

3. To properly remove a module, pull simultaneously the ejector/inserter clips, located at the top and bottom of the module. Record the original location of the module to ensure that the same or replacement module is inserted into the correct slot. While modules with current input provide automatic shorting of external CT circuits, for CT/VT modules it is recommended to short/isolate external circuits accordingly for maximum safety.

4. To properly insert a module, ensure that the correct module type is inserted into the correct slot position. The ejector/inserter clips located at the top and at the bottom of each module must be in the disengaged position as the module is smoothly inserted into the slot. Once the clips have cleared the raised edge of the chassis, engage the clips simultaneously. When the clips have locked into position, the module is fully inserted.

NOTE

The new CT/VT modules can only be used with new CPUs; similarly, old CT/VT modules can only be used with old CPUs. In the event that there is a mismatch between the CPU and CT/VT module, the relay does not function and a DSP ERROR or HARDWARE MISMATCH error displays.

10.6 Battery

A battery powers the real time clock on startup of the device.

When required, the battery can be replaced. The battery type is 3 V cylindrical.

The power supply module contains the battery. The power supply modules were upgraded in 2014 to SH/SL from RH/RL, but the order code when purchasing a UR with redundant power supply remained as RH/RL so that customers can continue to use the same order codes. The order code can read RH or RL, while the module inside the unit reads SH or SL. The order code for replacement redundant power supply modules was changed to SH/SL. To determine which procedure to use, see the power supply module or use the photographs here.

10.6.1 Replace battery for RH/RL power supply

When required, the battery can be replaced. The power supply module contains the battery.

⚠CAUTION **To avoid injury, ensure that the unit has been powered off for a minimum of three minutes before replacing the battery.**

Risk of fire if battery is replaced with incorrect type or polarity.

To replace the battery:

1. Turn off the power to the unit.
2. Wait a minimum of three minutes to ensure that there is no power to the battery.
3. As outlined in the previous section, open the unit by sliding up the plastic latch on the right side of the front panel (basic front panel) or unscrewing the panel (enhanced front panel).
4. For the basic front panel, it needs to be removed in order to access the power supply module, which is typically in the first slot on the left side and blocked by the hinge of the front panel. To remove the front panel, unscrew its bracket on the front left side of the unit.
5. Simultaneously pull the ejector clips at the top and bottom of the power supply module and remove the module.
6. Unscrew the screw that attaches the metal cover to the module.
7. Slide the metal cover away from the clips about 1 cm (1/4 inch) and remove the cover.
8. Unclip the black plastic holder that keeps the battery in place. The plastic clips into the socket at the bottom on both sides. Use a flat-head screwdriver if you cannot unclip the plastic with your fingers.
9. Observe the + and - polarity of the battery and replace it with the same polarity as marked on the battery holder. Replace the battery with the identical make and model. For example, do not use a rechargeable battery.

Figure 10-6: Battery location on RH/RL power supply module

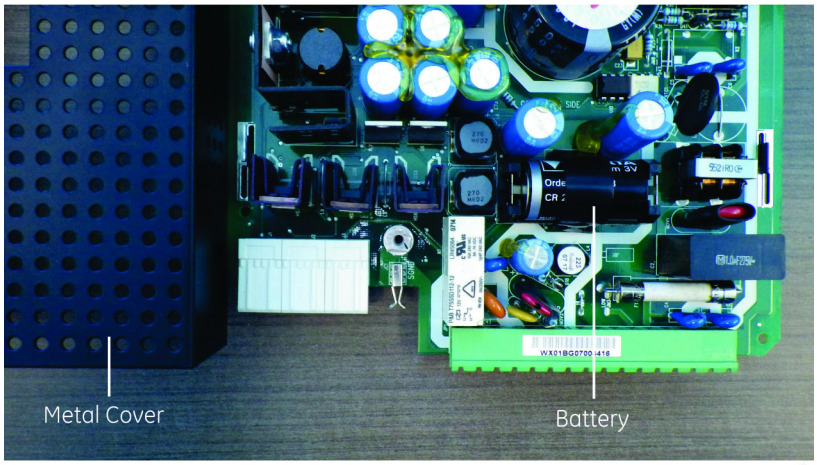

859718A1.cdr

10. Reinstall the battery clip and the metal cover, and reinsert the power supply module into the unit.
11. Power on the unit.
12. Dispose of the old battery as outlined in the next section.

10.6.2 Replace battery for SH/SL power supply

When required, the battery can be replaced. The power supply module contains the battery.

⚠CAUTION **To avoid injury, ensure that the unit has been powered off for a minimum of three minutes before replacing the battery.**

Risk of fire if battery is replaced with incorrect type or polarity.

To replace the battery:

1. Turn off the power to the unit.

2. Wait a minimum of three minutes to ensure that there is no power to the battery.
3. As outlined in the previous section, open the unit by sliding up the plastic latch on the right side of the front panel (basic front panel) or unscrewing the panel (enhanced front panel).
4. For the basic front panel, it needs to be removed in order to access the power supply module, which is typically in the first slot on the left side and blocked by the hinge of the front panel. To remove the front panel, unscrew the bracket on the left side of the unit.
5. Remove the power supply module by simultaneously pulling the ejector clips at the top and bottom of the module and sliding it out.
6. Unscrew all four screws (not three) that attach the metal cover to the module. The fourth screw is at the back end of the module, on the opposite side from the clips, beside the white electronics part (see figure).
7. Slide the metal cover away from the clips about 0.5 cm (1/8 inch) and remove the cover.
8. Unclip the black plastic holder that keeps the battery in place. The plastic clips into the socket at the bottom on both sides—pull the plastic away from the battery. Use a flat-head screwdriver if you cannot unclip the plastic with your fingers.
9. Replace the battery with the identical make and model. For example, do not use a rechargeable battery. Observe the + and - polarity of the battery and replace it with the same polarity as marked on the battery holder.

Figure 10-7: Battery location on SH/SL power supply module

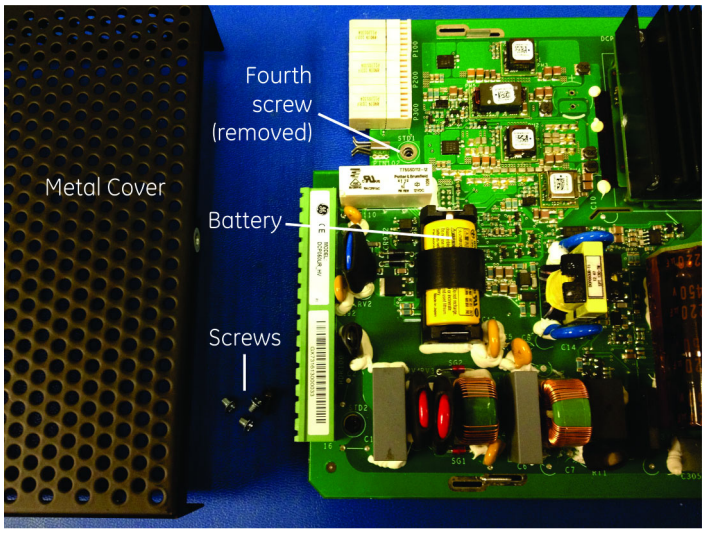

859717A1.cdr

10. Reinstall the battery holder and the metal cover, and reinsert the power supply module into the unit.
11. Power on the unit.
12. Dispose of the old battery as outlined in the next section.

10.6.3 Dispose of battery

10.6.3.1 EN Battery disposal

This product contains a battery that cannot be disposed of as unsorted municipal waste in the European Union. See the product documentation for specific battery information. The battery is marked with this symbol, which may include lettering to indicate cadmium (Cd), lead (Pb), or mercury (Hg). For proper recycling return the battery to your supplier or to a designated collection point. For more information see: www.recyclethis.info.

10.6.3.2 CS Nakládání s bateriemi

Tento produkt obsahuje baterie, které nemohou být zneškodněny v Evropské unii jako netříděný komunální odpadu. Viz dokumentace k produktu pro informace pro konkrétní baterie. Baterie je označena tímto symbolem, který může zahrnovat i uvedena písmena, kadmium (Cd), olovo (Pb), nebo rtuť (Hg). Pro správnou recyklaci baterií vraťte svémudodavateli nebo na určeném sběrném místě. Pro více informací viz: www.recyclethis.info.

10.6.3.3 DA Batteri affald

Dette produkt indeholder et batteri som ikke kan bortskaffes sammen med almindeligt husholdningsaffald i Europa. Se produktinformation for specifikke informationer om batteriet. Batteriet er forsynet med indgraveret symboler for hvad batteriet indeholder: kadmium (Cd), bly (Pb) og kviksølv (Hg). Europæiske brugere af elektrisk udstyr skal aflevere kasserede produkter til genbrug eller til leverandøren. Yderligere oplysninger findes på webstedet www.recyclethis.info.

10.6.3.4 DE Entsorgung von Batterien

Dieses Produkt beinhaltet eine Batterie, die nicht als unsortierter städtischer Abfall in der europäischen Union entsorgt werden darf. Beachten Sie die spezifischen Batterie-informationen in der Produktdokumentation. Die Batterie ist mit diesem Symbol gekennzeichnet, welches auch Hinweise auf möglicherweise enthaltene Stoffe wie Kadmium (Cd), Blei (Pb) oder Quecksilber (Hektogramm) darstellt. Für die korrekte Wiederverwertung bringen Sie diese Batterie zu Ihrem lokalen Lieferanten zurück oder entsorgen Sie das Produkt an den gekennzeichneten Sammelstellen. Weitere Informationen hierzu finden Sie auf der folgenden Website: www.recyclethis.info.

10.6.3.5 EL Απόρριψη μπαταριών

Αυτό το προϊόν περιέχει μια μπαταρία που δεν πρέπει να απορρίπτεται σε δημόσια συστήματα απόρριψης στην Ευρωπαϊκή Κοινότητα. Δείτε την τεκμηρίωση του προϊόντος για συγκεκριμένες πληροφορίες που αφορούν τη μπαταρία. Η μπαταρία είναι φέρει σήμανση με αυτό το σύμβολο, το οποίο μπορεί να περιλαμβάνει γράμματα για να δηλώσουν το κάδμιο (Cd), τον μόλυβδο (Pb), ή τον υδράργυρο (Hg). Για την κατάλληλη ανακύκλωση επιστρέψτε την μπαταρία στον προμηθευτή σας ή σε καθορισμένο σημείο συλλογής. Για περισσότερες πληροφορίες δείτε: www.recyclethis.info.

10.6.3.6 ES Eliminacion de baterias

Este producto contiene una batería que no se pueda eliminar como basura normal sin clasificar en la Unión Europea. Examine la documentación del producto para la información específica de la batería. La batería se marca con este símbolo, que puede incluir siglas para indicar el cadmio (Cd), el plomo (Pb), o el mercurio (Hg). Para el reciclaje apropiado, devuelva este producto a su distribuidor ó deshágase de él en los puntos de reciclaje designados. Para mas información : wwwrecyclethis.info.

10.6.3.7 ET Patareide kõrvaldamine

Käesolev toode sisaldab patareisid, mida Euroopa Liidus ei tohi kõrvaldada sorteerimata olmejäätmetena. Andmeid patareide kohta vaadake toote dokumentatsioonist. Patareid on märgistatud käesoleva sümboliga, millel võib olla kaadmiumi (Cd), pliid (Pb) või elavhõbedat (Hg) tähistavad tähed. Nõuetekohaseks ringlusse võtmiseks tagastage patarei tarnijale või kindlaksmääratud vastuvõtupunkti. Lisainformatsiooni saab Internetist aadressil: www.recyclethis.info.

10.6.3.8 FI Paristoje ja akkujen hävittäminen

Tuote sisältää pariston, jota ei saa hävittää Euroopan Unionin alueella talousjätteen mukana. Tarkista tuoteselosteesta tuotteen tiedot. Paristo on merkitty tällä symbolilla ja saattaa sisältää cadmiumia (Cd), lyijyä (Pb) tai elohopeaa (Hg). Oikean kierrätystavan varmistamiseksi palauta tuote paikalliselle jälleenmyyjälle tai palauta se paristojen keräyspisteeseen. Lisätietoja sivuilla www.recyclethis.info.

10.6.3.9 FR Élimination des piles

Ce produit contient une batterie qui ne peuvent être éliminés comme déchets municipaux non triés dans l'Union européenne. Voir la documentation du produit au niveau des renseignements sur la pile. La batterie est marqué de ce symbole, qui comprennent les indications cadmium (Cd), plomb (Pb), ou mercure (Hg). Pour le recyclage, retourner la batterie à votre fournisseur ou à un point de collecte. Pour plus d'informations, voir: www.recyclethis.info.

10.6.3.10 HU Akkumulátor hulladék kezelése

Ezen termék akkumulátort tartalmaz, amely az Európai Unión belül csak a kijelölt módon és helyen dobható ki. A terméken illetve a mellékelt ismertetőn olvasható a kadmium (Cd), ólom (Pb) vagy higany (Hg) tartalomra utaló betűjelzés. A hulladék akkumulátor leadható a termék forgalmazójánál új akkumulátor vásárlásakor, vagy a kijelölt elektronikai hulladékudvarokban. További információ a www.recyclethis.info oldalon.

10.6.3.11 IT Smaltimento batterie

Questo prodotto contiene una batteria che non può essere smaltita nei comuni contenitori per lo smaltimento rifiuti, nell' Unione Europea. Controllate la documentazione del prodotto per le informazioni specifiche sulla batteria. La batteria è contrassegnata con questo simbolo e può includere alcuni caratteri ad indicare la presenza di cadmio (Cd), piombo (Pb) oppure mercurio (Hg). Per il corretto smaltimento, potete restituirli al vostro fornitore locale, oppure rivolgervi e consegnarli presso i centri di raccolta preposti. Per maggiori informazioni vedere: ww.recyclethis.info.

10.6.3.12 LT Baterijų šalinimas

Šios įrangos sudėtyje yra baterijų, kurias draudžiama šalinti Europos Sąjungos viešose nerūšiuotų atliekų šalinimo sistemose. Informaciją apie baterijas galite rasti įrangos techninėje dokumentacijoje. Baterijos žymimos šiuo simboliu, papildomai gali būti nurodoma kad baterijų sudėtyje yra kadmio (Cd), švino (Pb) ar gyvsidabrio (Hg). Eksploatavimui nebetinkamas baterijas pristatykite į tam skirtas surinkimo vietas arba grąžinkite jas tiesioginiam tiekėjui, kad jos būtų tinkamai utilizuotos. Daugiau informacijos rasite šioje interneto svetainėje: www.recyclethis.info.

10.6.3.13 LV Bateriju likvidēšana

Šis produkts satur bateriju vai akumulatoru, kuru nedrīkst izmest Eiropas Savienībā esošajās sadzīves atkritumu sistēmās. Sk. produkta dokumentācijā, kur ir norādīta konkrēta informācija par bateriju vai akumulatoru. Baterijas vai akumulatora marķējumā ir šis simbols, kas var ietvert burtus, kuri norāda kadmiju (Cd), svinu (Pb) vai dzīvsudrabu (Hg). Pēc ekspluatācijas laika beigām baterijas vai akumulatori jānodod piegādātājam vai specializētā bateriju savākšanas vietā. Sīkāku informāciju var iegūt vietnē: www.recyclethis.info.

10.6.3.14 NL Verwijderen van baterijen

Dit product bevat een batterij welke niet kan verwijdert worden via de gemeentelijke huisvuilscheiding in de Europese Gemeenschap. Gelieve de product documentatie te controleren voor specifieke batterij informatie. De batterijen met deze label kunnen volgende indictaies bevatten cadium (Cd), lood (Pb) of kwik (Hg). Voor correcte vorm van kringloop, geef je de producten terug aan jou locale leverancier of geef het af aan een gespecialiseerde verzamelpunt. Meer informatie vindt u op de volgende website: www.recyclethis.info.

10.6.3.15 NO Retur av batteri

Dette produkt inneholder et batteri som ikke kan kastes med usortert kommunalt søppel i den Europeiske Unionen. Se produktdokumentasjonen for spesifikk batteriinformasjon. Batteriet er merket med dette symbolet som kan inkludere symboler for å indikere at kadmium (Cd), bly (Pb), eller kvikksølv (Hg) forekommer. Returner batteriet til leverandøren din eller til et dedikert oppsamlingspunkt for korrekt gjenvinning. For mer informasjon se: www.recyclethis.info.

10.6.3.16 PL Pozbywanie się zużytych baterii

Ten produkt zawiera baterie, które w Unii Europejskiej mogą być usuwane tylko jako posegregowane odpady komunalne. Dokładne informacje dotyczące użytych baterii znajdują się w dokumentacji produktu. Baterie oznaczone tym symbolem mogą zawierać dodatkowe oznaczenia literowe wskazujące na zawartość kadmu (Cd), ołowiu (Pb) lub rtęci (Hg). Dla zapewnienia właściwej utylizacji, należy zwrócić baterie do dostawcy albo do wyznaczonego punktu zbiórki. Więcej informacji można znaleźć na stronie internetowej www.recyclethis.info.

10.6.3.17 PT Eliminação de Baterias

Este produto contêm uma bateria que não pode ser considerado lixo municipal na União Europeia. Consulte a documentação do produto para obter informação específica da bateria. A bateria é identificada por meio de este símbolo, que pode incluir a rotulação para indicar o cádmio (Cd), chumbo (Pb), ou o mercúrio (hg). Para uma reciclagem apropriada envie a bateria para o seu fornecedor ou para um ponto de recolha designado. Para mais informação veja: www.recyclethis.info.

10.6.3.18 RU Утилизация батарей

Согласно европейской директиве об отходах электрического и электронного оборудования, продукты, содержащие батареи, нельзя утилизировать как обычные отходы на территории ЕС. Более подробную информацию вы найдете в документации к продукту. На этом символе могут присутствовать буквы, которые означают, что батарея собержит кадмий (Cd), свинец (Pb) или ртуть (Hg). Для надлежащей утилизации по окончании срока эксплуатации пользователь должен возвратить батареи локальному поставщику или сдать в специальный пункт приема. Подробности можно найти на веб-сайте: www.recyclethis.info.

10.6.3.19 SK Zaobchádzanie s batériami

Tento produkt obsahuje batériu, s ktorou sa v Európskej únii nesmie nakladať ako s netriedeným komunálnym odpadom. Dokumentácia k produktu obsahuje špecifické informácie o batérii. Batéria je označená týmto symbolom, ktorý môže obsahovať písmená na označenie kadmia (Cd), olova (Pb), alebo ortuti (Hg). Na správnu recykláciu vráťte batériu vášmu lokálnemu dodávateľovi alebo na určené zberné miesto. Pre viac informácii pozrite: www.recyclethis.info.

10.6.3.20 SL Odlaganje baterij

Ta izdelek vsebuje baterijo, ki je v Evropski uniji ni dovoljeno odstranjevati kot nesortiran komunalni odpadek. Za posebne informacije o bateriji glejte dokumentacijo izdelka. Baterija je označena s tem simbolom, ki lahko vključuje napise, ki označujejo kadmij (Cd), svinec (Pb) ali živo srebro (Hg). Za ustrezno recikliranje baterijo vrnite dobavitelju ali jo odstranite na določenem zbirališču. Za več informacij obiščite spletno stran: www.recyclethis.info.

10.6.3.21 SV Kassering av batteri

Denna produkt innehåller ett batteri som inte får kastas i allmänna sophanteringssytem inom den europeiska unionen. Se produktdokumentationen för specifik batteriinformation. Batteriet är märkt med denna symbol, vilket kan innebära att det innehåller kadmium (Cd), bly (Pb) eller kvicksilver (Hg). För korrekt återvinning skall batteriet returneras till leverantören eller till en därför avsedd deponering. För mer information, se: www.recyclethis.info.

10.6.3.22 TR Pil Geri Dönüşümü

Bu ürün Avrupa Birliği genel atık sistemlerine atılmaması gereken pil içermektedir. Daha detaylı pil bilgisi için ürünün kataloğunu inceleyiniz. Bu sembolle işaretlenmiş piller Kadmiyum(Cd), Kurşun(Pb) ya da Civa(Hg) içerebilir. Doğru geri dönüşüm için ürünü yerel tedarikçinize geri veriniz ya da özel işaretlenmiş toplama noktlarına atınız. Daha fazla bilgi için: www.recyclethis.info.

10.6.3.23 Global contacts

North America	905-294-6222
Latin America	+55 11 3614 1700
Europe, Middle East, Africa	+(34) 94 485 88 00
Asia	+86-21-2401-3208
India	+91 80 41314617

From GE Part Number 1604-0021-A1, GE Publication Number GEK-113574

10.7 Clear files and data after uninstall

The unit can be decommissioned by turning off power to the unit and disconnecting the wires to it.

To clear files and settings in the UR:

1. On the UR front panel, navigate to **COMMANDS** ⇨⇩ **RELAY MAINTENANCE** ⇨⇩ **SERVICE COMMAND**, enter the value 20511, and press the **ENTER** key. The relay restarts and clears the UR.
2. Clear the flash memory using the **SETTINGS** ⇨ **PRODUCT SETUP** ⇨⇩ **CLEAR RELAY RECORDS** command.

To clear files and settings on the computer:

1. Uninstall the EnerVista UR Setup software.
2. Find and delete the following UR files:
   - .URS, .CID, and .ICD settings
   - .EVT event records
   - .CFG and .DAT COMTRADE

10.8 Repairs

The battery and modules inside the case can be replaced without return of the device to the factory. The firmware and software can be upgraded without return of the device to the factory.

Fuses in the power supply module are not field-replaceable.

Files can be requested for use by technical support staff, for example the Service Report (click the icon in the software) or under **Maintenance > Retrieve File**, as outlined elsewhere in this document.

For issues not solved by troubleshooting, the process to return the device to the factory for repair is as follows:

- Contact a GE Grid Solutions Technical Support Center. Contact information is found in the first chapter.
- Obtain a Return Materials Authorization (RMA) number from the Technical Support Center.
- Verify that the RMA and Commercial Invoice received have the correct information.
- Tightly pack the unit in a box with bubble wrap, foam material, or styrofoam inserts or packaging peanuts to cushion the item(s). You may also use double boxing whereby you place the box in a larger box that contains at least 5 cm of cushioning material.
- Ship the unit by courier or freight forwarder, along with the Commercial Invoice and RMA, to the factory.

  GE GRID SOLUTIONS
  650 MARKLAND STREET
  MARKHAM, ONTARIO
  CANADA L6C 0M1
  ATTN: SERVICE DEPT.

RMA# : _____

Customers are responsible for shipping costs to the factory, regardless of whether the unit is under warranty.

- Fax a copy of the shipping information to the GE Grid Solutions service department in Canada at +1 905 927 5098.

Use the detailed return procedure outlined at

https://www.gegridsolutions.com/multilin/support/ret_proc.htm

The current warranty and return information are outlined at

https://www.gegridsolutions.com/multilin/warranty.htm

10.9 Storage

Store the unit indoors in a cool, dry place. If possible, store in the original packaging. Follow the storage temperature range outlined in the Specifications.

NOTICE To avoid deterioration of electrolytic capacitors, power up units that are stored in a de-energized state once per year, for one hour continuously.

10.10 Disposal

Other than the battery, there are no special requirements for disposal of the unit at the end its service life. For customers located in the European Union, dispose of the battery as outlined earlier. To prevent non-intended use of the unit, remove the modules as outlined earlier, dismantle the unit, and recycle the metal when possible.

F60 Feeder Protection System

Appendix A: FlexAnalog operands

This appendix outlines FlexAnalog parameters.

A.1 FlexAnalog items

A FlexAnalog parameter is an analog parameter.

FlexAnalog items are also viewable in a web browser. Enter the IP address of the UR, access the **Device Information Menu** option, then the **FlexAnalog Parameter Listing** option. Entries displayed online depend on order code.

Table A-1: FlexAnalog data items

Decimal address	FlexAnalog name	Units	Description
5760	Sns Dir Power 1	Watts	Sensitive directional power 1 actual value
5762	Sns Dir Power 2	Watts	Sensitive directional power 2 actual value
5792	RGF 1 Igd Mag	Amps	Restricted ground fault 1 differential ground current magnitude
5794	RGF 1 Igr Mag	Amps	Restricted ground fault 1 restricted ground current magnitude
5796	RGF 2 Igd Mag	Amps	Restricted ground fault 2 differential ground current magnitude
5798	RGF 2 Igr Mag	Amps	Restricted ground fault 2 restricted ground current magnitude
5800	RGF 3 Igd Mag	Amps	Restricted ground fault 3 differential ground current magnitude
5802	RGF 3 Igr Mag	Amps	Restricted ground fault 3 restricted ground current magnitude
5804	RGF 4 Igd Mag	Amps	Restricted ground fault 4 differential ground current magnitude
5806	RGF 4 Igr Mag	Amps	Restricted ground fault 4 restricted ground current magnitude
5808	RGF 5 Igd Mag	Amps	Restricted ground fault 5 differential ground current magnitude
5810	RGF 5 Igr Mag	Amps	Restricted ground fault 5 restricted ground current magnitude
5812	RGF 6 Igd Mag	Amps	Restricted ground fault 6 differential ground current magnitude
5814	RGF 6 Igr Mag	Amps	Restricted ground fault 6 restricted ground current magnitude
5824	Field RTD 1 Value	---	Field RTD 1 value
5825	Field RTD 2 Value	---	Field RTD 2 value
5826	Field RTD 3 Value	---	Field RTD 3 value
5827	Field RTD 4 Value	---	Field RTD 4 value
5828	Field RTD 5 Value	---	Field RTD 5 value
5829	Field RTD 6 Value	---	Field RTD 6 value

A

Decimal address	FlexAnalog name	Units	Description
5830	Field RTD 7 Value	---	Field RTD 7 value
5831	Field RTD 8 Value	---	Field RTD 8 value
5832	Field TDR 1 Value	---	Field TDR 1 value
5834	Field TDR 2 Value	---	Field TDR 2 value
5836	Field TDR 3 Value	---	Field TDR 3 value
5838	Field TDR 4 Value	---	Field TDR 4 value
5840	Field TDR 5 Value	---	Field TDR 5 value
5842	Field TDR 6 Value	---	Field TDR 6 value
5844	Field TDR 7 Value	---	Field TDR 7 value
5846	Field TDR 8 Value	---	Field TDR 8 value
5856	Freq Rate 1 Value	Hz/s	Frequency rate of change 1 actual value
5860	Freq Rate 2 Value	Hz/s	Frequency rate of change 2 actual value
5864	Freq Rate 3 Value	Hz/s	Frequency rate of change 3 actual value
5868	Freq Rate 4 Value	Hz/s	Frequency rate of change 4 actual value
6144	SRC 1 Ia RMS	Amps	Source 1 phase A current RMS
6146	SRC 1 Ib RMS	Amps	Source 1 phase B current RMS
6148	SRC 1 Ic RMS	Amps	Source 1 phase C current RMS
6150	SRC 1 In RMS	Amps	Source 1 neutral current RMS
6152	SRC 1 Ia Mag	Amps	Source 1 phase A current magnitude
6154	SRC 1 Ia Angle	Degrees	Source 1 phase A current angle
6155	SRC 1 Ib Mag	Amps	Source 1 phase B current magnitude
6157	SRC 1 Ib Angle	Degrees	Source 1 phase B current angle
6158	SRC 1 Ic Mag	Amps	Source 1 phase C current magnitude
6160	SRC 1 Ic Angle	Degrees	Source 1 phase C current angle
6161	SRC 1 In Mag	Amps	Source 1 neutral current magnitude
6163	SRC 1 In Angle	Degrees	Source 1 neutral current angle
6164	SRC 1 Ig RMS	Amps	Source 1 ground current RMS
6166	SRC 1 Ig Mag	Amps	Source 1 ground current magnitude
6168	SRC 1 Ig Angle	Degrees	Source 1 ground current angle
6169	SRC 1 I_0 Mag	Amps	Source 1 zero-sequence current magnitude
6171	SRC 1 I_0 Angle	Degrees	Source 1 zero-sequence current angle
6172	SRC 1 I_1 Mag	Amps	Source 1 positive-sequence current magnitude
6174	SRC 1 I_1 Angle	Degrees	Source 1 positive-sequence current angle
6175	SRC 1 I_2 Mag	Amps	Source 1 negative-sequence current magnitude
6177	SRC 1 I_2 Angle	Degrees	Source 1 negative-sequence current angle
6178	SRC 1 Igd Mag	Amps	Source 1 differential ground current magnitude
6180	SRC 1 Igd Angle	Degrees	Source 1 differential ground current angle
6208	SRC 2 Ia RMS	Amps	Source 2 phase A current RMS
6210	SRC 2 Ib RMS	Amps	Source 2 phase B current RMS
6212	SRC 2 Ic RMS	Amps	Source 2 phase C current RMS
6214	SRC 2 In RMS	Amps	Source 2 neutral current RMS
6216	SRC 2 Ia Mag	Amps	Source 2 phase A current magnitude
6218	SRC 2 Ia Angle	Degrees	Source 2 phase A current angle
6219	SRC 2 Ib Mag	Amps	Source 2 phase B current magnitude
6221	SRC 2 Ib Angle	Degrees	Source 2 phase B current angle
6222	SRC 2 Ic Mag	Amps	Source 2 phase C current magnitude

A

Decimal address	FlexAnalog name	Units	Description
6224	SRC 2 Ic Angle	Degrees	Source 2 phase C current angle
6225	SRC 2 In Mag	Amps	Source 2 neutral current magnitude
6227	SRC 2 In Angle	Degrees	Source 2 neutral current angle
6228	SRC 2 Ig RMS	Amps	Source 2 ground current RMS
6230	SRC 2 Ig Mag	Amps	Source 2 ground current magnitude
6232	SRC 2 Ig Angle	Degrees	Source 2 ground current angle
6233	SRC 2 I_0 Mag	Amps	Source 2 zero-sequence current magnitude
6235	SRC 2 I_0 Angle	Degrees	Source 2 zero-sequence current angle
6236	SRC 2 I_1 Mag	Amps	Source 2 positive-sequence current magnitude
6238	SRC 2 I_1 Angle	Degrees	Source 2 positive-sequence current angle
6239	SRC 2 I_2 Mag	Amps	Source 2 negative-sequence current magnitude
6241	SRC 2 I_2 Angle	Degrees	Source 2 negative-sequence current angle
6242	SRC 2 Igd Mag	Amps	Source 2 differential ground current magnitude
6244	SRC 2 Igd Angle	Degrees	Source 2 differential ground current angle
6272	SRC 3 Ia RMS	Amps	Source 3 phase A current RMS
6274	SRC 3 Ib RMS	Amps	Source 3 phase B current RMS
6276	SRC 3 Ic RMS	Amps	Source 3 phase C current RMS
6278	SRC 3 In RMS	Amps	Source 3 neutral current RMS
6280	SRC 3 Ia Mag	Amps	Source 3 phase A current magnitude
6282	SRC 3 Ia Angle	Degrees	Source 3 phase A current angle
6283	SRC 3 Ib Mag	Amps	Source 3 phase B current magnitude
6285	SRC 3 Ib Angle	Degrees	Source 3 phase B current angle
6286	SRC 3 Ic Mag	Amps	Source 3 phase C current magnitude
6288	SRC 3 Ic Angle	Degrees	Source 3 phase C current angle
6289	SRC 3 In Mag	Amps	Source 3 neutral current magnitude
6291	SRC 3 In Angle	Degrees	Source 3 neutral current angle
6292	SRC 3 Ig RMS	Amps	Source 3 ground current RMS
6294	SRC 3 Ig Mag	Amps	Source 3 ground current magnitude
6296	SRC 3 Ig Angle	Degrees	Source 3 ground current angle
6297	SRC 3 I_0 Mag	Amps	Source 3 zero-sequence current magnitude
6299	SRC 3 I_0 Angle	Degrees	Source 3 zero-sequence current angle
6300	SRC 3 I_1 Mag	Amps	Source 3 positive-sequence current magnitude
6302	SRC 3 I_1 Angle	Degrees	Source 3 positive-sequence current angle
6303	SRC 3 I_2 Mag	Amps	Source 3 negative-sequence current magnitude
6305	SRC 3 I_2 Angle	Degrees	Source 3 negative-sequence current angle
6306	SRC 3 Igd Mag	Amps	Source 3 differential ground current magnitude
6308	SRC 3 Igd Angle	Degrees	Source 3 differential ground current angle
6336	SRC 4 Ia RMS	Amps	Source 4 phase A current RMS
6338	SRC 4 Ib RMS	Amps	Source 4 phase B current RMS
6340	SRC 4 Ic RMS	Amps	Source 4 phase C current RMS
6342	SRC 4 In RMS	Amps	Source 4 neutral current RMS
6344	SRC 4 Ia Mag	Amps	Source 4 phase A current magnitude
6346	SRC 4 Ia Angle	Degrees	Source 4 phase A current angle
6347	SRC 4 Ib Mag	Amps	Source 4 phase B current magnitude
6349	SRC 4 Ib Angle	Degrees	Source 4 phase B current angle
6350	SRC 4 Ic Mag	Amps	Source 4 phase C current magnitude

A

Decimal address	FlexAnalog name	Units	Description
6352	SRC 4 Ic Angle	Degrees	Source 4 phase C current angle
6353	SRC 4 In Mag	Amps	Source 4 neutral current magnitude
6355	SRC 4 In Angle	Degrees	Source 4 neutral current angle
6356	SRC 4 Ig RMS	Amps	Source 4 ground current RMS
6358	SRC 4 Ig Mag	Amps	Source 4 ground current magnitude
6360	SRC 4 Ig Angle	Degrees	Source 4 ground current angle
6361	SRC 4 I_0 Mag	Amps	Source 4 zero-sequence current magnitude
6363	SRC 4 I_0 Angle	Degrees	Source 4 zero-sequence current angle
6364	SRC 4 I_1 Mag	Amps	Source 4 positive-sequence current magnitude
6366	SRC 4 I_1 Angle	Degrees	Source 4 positive-sequence current angle
6367	SRC 4 I_2 Mag	Amps	Source 4 negative-sequence current magnitude
6369	SRC 4 I_2 Angle	Degrees	Source 4 negative-sequence current angle
6370	SRC 4 Igd Mag	Amps	Source 4 differential ground current magnitude
6372	SRC 4 Igd Angle	Degrees	Source 4 differential ground current angle
6656	SRC 1 Vag RMS	Volts	Source 1 phase AG voltage RMS
6658	SRC 1 Vbg RMS	Volts	Source 1 phase BG voltage RMS
6660	SRC 1 Vcg RMS	Volts	Source 1 phase CG voltage RMS
6662	SRC 1 Vag Mag	Volts	Source 1 phase AG voltage magnitude
6664	SRC 1 Vag Angle	Degrees	Source 1 phase AG voltage angle
6665	SRC 1 Vbg Mag	Volts	Source 1 phase BG voltage magnitude
6667	SRC 1 Vbg Angle	Degrees	Source 1 phase BG voltage angle
6668	SRC 1 Vcg Mag	Volts	Source 1 phase CG voltage magnitude
6670	SRC 1 Vcg Angle	Degrees	Source 1 phase CG voltage angle
6671	SRC 1 Vab RMS	Volts	Source 1 phase AB voltage RMS
6673	SRC 1 Vbc RMS	Volts	Source 1 phase BC voltage RMS
6675	SRC 1 Vca RMS	Volts	Source 1 phase CA voltage RMS
6677	SRC 1 Vab Mag	Volts	Source 1 phase AB voltage magnitude
6679	SRC 1 Vab Angle	Degrees	Source 1 phase AB voltage angle
6680	SRC 1 Vbc Mag	Volts	Source 1 phase BC voltage magnitude
6682	SRC 1 Vbc Angle	Degrees	Source 1 phase BC voltage angle
6683	SRC 1 Vca Mag	Volts	Source 1 phase CA voltage magnitude
6685	SRC 1 Vca Angle	Degrees	Source 1 phase CA voltage angle
6686	SRC 1 Vx RMS	Volts	Source 1 auxiliary voltage RMS
6688	SRC 1 Vx Mag	Volts	Source 1 auxiliary voltage magnitude
6690	SRC 1 Vx Angle	Degrees	Source 1 auxiliary voltage angle
6691	SRC 1 V_0 Mag	Volts	Source 1 zero-sequence voltage magnitude
6693	SRC 1 V_0 Angle	Degrees	Source 1 zero-sequence voltage angle
6694	SRC 1 V_1 Mag	Volts	Source 1 positive-sequence voltage magnitude
6696	SRC 1 V_1 Angle	Degrees	Source 1 positive-sequence voltage angle
6697	SRC 1 V_2 Mag	Volts	Source 1 negative-sequence voltage magnitude
6699	SRC 1 V_2 Angle	Degrees	Source 1 negative-sequence voltage angle
6720	SRC 2 Vag RMS	Volts	Source 2 phase AG voltage RMS
6722	SRC 2 Vbg RMS	Volts	Source 2 phase BG voltage RMS
6724	SRC 2 Vcg RMS	Volts	Source 2 phase CG voltage RMS
6726	SRC 2 Vag Mag	Volts	Source 2 phase AG voltage magnitude
6728	SRC 2 Vag Angle	Degrees	Source 2 phase AG voltage angle

Decimal address	FlexAnalog name	Units	Description
6729	SRC 2 Vbg Mag	Volts	Source 2 phase BG voltage magnitude
6731	SRC 2 Vbg Angle	Degrees	Source 2 phase BG voltage angle
6732	SRC 2 Vcg Mag	Volts	Source 2 phase CG voltage magnitude
6734	SRC 2 Vcg Angle	Degrees	Source 2 phase CG voltage angle
6735	SRC 2 Vab RMS	Volts	Source 2 phase AB voltage RMS
6737	SRC 2 Vbc RMS	Volts	Source 2 phase BC voltage RMS
6739	SRC 2 Vca RMS	Volts	Source 2 phase CA voltage RMS
6741	SRC 2 Vab Mag	Volts	Source 2 phase AB voltage magnitude
6743	SRC 2 Vab Angle	Degrees	Source 2 phase AB voltage angle
6744	SRC 2 Vbc Mag	Volts	Source 2 phase BC voltage magnitude
6746	SRC 2 Vbc Angle	Degrees	Source 2 phase BC voltage angle
6747	SRC 2 Vca Mag	Volts	Source 2 phase CA voltage magnitude
6749	SRC 2 Vca Angle	Degrees	Source 2 phase CA voltage angle
6750	SRC 2 Vx RMS	Volts	Source 2 auxiliary voltage RMS
6752	SRC 2 Vx Mag	Volts	Source 2 auxiliary voltage magnitude
6754	SRC 2 Vx Angle	Degrees	Source 2 auxiliary voltage angle
6755	SRC 2 V_0 Mag	Volts	Source 2 zero-sequence voltage magnitude
6757	SRC 2 V_0 Angle	Degrees	Source 2 zero-sequence voltage angle
6758	SRC 2 V_1 Mag	Volts	Source 2 positive-sequence voltage magnitude
6760	SRC 2 V_1 Angle	Degrees	Source 2 positive-sequence voltage angle
6761	SRC 2 V_2 Mag	Volts	Source 2 negative-sequence voltage magnitude
6763	SRC 2 V_2 Angle	Degrees	Source 2 negative-sequence voltage angle
6784	SRC 3 Vag RMS	Volts	Source 3 phase AG voltage RMS
6786	SRC 3 Vbg RMS	Volts	Source 3 phase BG voltage RMS
6788	SRC 3 Vcg RMS	Volts	Source 3 phase CG voltage RMS
6790	SRC 3 Vag Mag	Volts	Source 3 phase AG voltage magnitude
6792	SRC 3 Vag Angle	Degrees	Source 3 phase AG voltage angle
6793	SRC 3 Vbg Mag	Volts	Source 3 phase BG voltage magnitude
6795	SRC 3 Vbg Angle	Degrees	Source 3 phase BG voltage angle
6796	SRC 3 Vcg Mag	Volts	Source 3 phase CG voltage magnitude
6798	SRC 3 Vcg Angle	Degrees	Source 3 phase CG voltage angle
6799	SRC 3 Vab RMS	Volts	Source 3 phase AB voltage RMS
6801	SRC 3 Vbc RMS	Volts	Source 3 phase BC voltage RMS
6803	SRC 3 Vca RMS	Volts	Source 3 phase CA voltage RMS
6805	SRC 3 Vab Mag	Volts	Source 3 phase AB voltage magnitude
6807	SRC 3 Vab Angle	Degrees	Source 3 phase AB voltage angle
6808	SRC 3 Vbc Mag	Volts	Source 3 phase BC voltage magnitude
6810	SRC 3 Vbc Angle	Degrees	Source 3 phase BC voltage angle
6811	SRC 3 Vca Mag	Volts	Source 3 phase CA voltage magnitude
6813	SRC 3 Vca Angle	Degrees	Source 3 phase CA voltage angle
6814	SRC 3 Vx RMS	Volts	Source 3 auxiliary voltage RMS
6816	SRC 3 Vx Mag	Volts	Source 3 auxiliary voltage magnitude
6818	SRC 3 Vx Angle	Degrees	Source 3 auxiliary voltage angle
6819	SRC 3 V_0 Mag	Volts	Source 3 zero-sequence voltage magnitude
6821	SRC 3 V_0 Angle	Degrees	Source 3 zero-sequence voltage angle
6822	SRC 3 V_1 Mag	Volts	Source 3 positive-sequence voltage magnitude

A

Decimal address	FlexAnalog name	Units	Description
6824	SRC 3 V_1 Angle	Degrees	Source 3 positive-sequence voltage angle
6825	SRC 3 V_2 Mag	Volts	Source 3 negative-sequence voltage magnitude
6827	SRC 3 V_2 Angle	Degrees	Source 3 negative-sequence voltage angle
6848	SRC 4 Vag RMS	Volts	Source 4 phase AG voltage RMS
6850	SRC 4 Vbg RMS	Volts	Source 4 phase BG voltage RMS
6852	SRC 4 Vcg RMS	Volts	Source 4 phase CG voltage RMS
6854	SRC 4 Vag Mag	Volts	Source 4 phase AG voltage magnitude
6856	SRC 4 Vag Angle	Degrees	Source 4 phase AG voltage angle
6857	SRC 4 Vbg Mag	Volts	Source 4 phase BG voltage magnitude
6859	SRC 4 Vbg Angle	Degrees	Source 4 phase BG voltage angle
6860	SRC 4 Vcg Mag	Volts	Source 4 phase CG voltage magnitude
6862	SRC 4 Vcg Angle	Degrees	Source 4 phase CG voltage angle
6863	SRC 4 Vab RMS	Volts	Source 4 phase AB voltage RMS
6865	SRC 4 Vbc RMS	Volts	Source 4 phase BC voltage RMS
6867	SRC 4 Vca RMS	Volts	Source 4 phase CA voltage RMS
6869	SRC 4 Vab Mag	Volts	Source 4 phase AB voltage magnitude
6871	SRC 4 Vab Angle	Degrees	Source 4 phase AB voltage angle
6872	SRC 4 Vbc Mag	Volts	Source 4 phase BC voltage magnitude
6874	SRC 4 Vbc Angle	Degrees	Source 4 phase BC voltage angle
6875	SRC 4 Vca Mag	Volts	Source 4 phase CA voltage magnitude
6877	SRC 4 Vca Angle	Degrees	Source 4 phase CA voltage angle
6878	SRC 4 Vx RMS	Volts	Source 4 auxiliary voltage RMS
6880	SRC 4 Vx Mag	Volts	Source 4 auxiliary voltage magnitude
6882	SRC 4 Vx Angle	Degrees	Source 4 auxiliary voltage angle
6883	SRC 4 V_0 Mag	Volts	Source 4 zero-sequence voltage magnitude
6885	SRC 4 V_0 Angle	Degrees	Source 4 zero-sequence voltage angle
6886	SRC 4 V_1 Mag	Volts	Source 4 positive-sequence voltage magnitude
6888	SRC 4 V_1 Angle	Degrees	Source 4 positive-sequence voltage angle
6889	SRC 4 V_2 Mag	Volts	Source 4 negative-sequence voltage magnitude
6891	SRC 4 V_2 Angle	Degrees	Source 4 negative-sequence voltage angle
7168	SRC 1 P	Watts	Source 1 three-phase real power
7170	SRC 1 Pa	Watts	Source 1 phase A real power
7172	SRC 1 Pb	Watts	Source 1 phase B real power
7174	SRC 1 Pc	Watts	Source 1 phase C real power
7176	SRC 1 Q	Vars	Source 1 three-phase reactive power
7178	SRC 1 Qa	Vars	Source 1 phase A reactive power
7180	SRC 1 Qb	Vars	Source 1 phase B reactive power
7182	SRC 1 Qc	Vars	Source 1 phase C reactive power
7184	SRC 1 S	VA	Source 1 three-phase apparent power
7186	SRC 1 Sa	VA	Source 1 phase A apparent power
7188	SRC 1 Sb	VA	Source 1 phase B apparent power
7190	SRC 1 Sc	VA	Source 1 phase C apparent power
7192	SRC 1 PF	---	Source 1 three-phase power factor
7193	SRC 1 Phase A PF	---	Source 1 phase A power factor
7194	SRC 1 Phase B PF	---	Source 1 phase B power factor
7195	SRC 1 Phase C PF	---	Source 1 phase C power factor

Decimal address	FlexAnalog name	Units	Description
7200	SRC 2 P	Watts	Source 2 three-phase real power
7202	SRC 2 Pa	Watts	Source 2 phase A real power
7204	SRC 2 Pb	Watts	Source 2 phase B real power
7206	SRC 2 Pc	Watts	Source 2 phase C real power
7208	SRC 2 Q	Vars	Source 2 three-phase reactive power
7210	SRC 2 Qa	Vars	Source 2 phase A reactive power
7212	SRC 2 Qb	Vars	Source 2 phase B reactive power
7214	SRC 2 Qc	Vars	Source 2 phase C reactive power
7216	SRC 2 S	VA	Source 2 three-phase apparent power
7218	SRC 2 Sa	VA	Source 2 phase A apparent power
7220	SRC 2 Sb	VA	Source 2 phase B apparent power
7222	SRC 2 Sc	VA	Source 2 phase C apparent power
7224	SRC 2 PF	---	Source 2 three-phase power factor
7225	SRC 2 Phase A PF	---	Source 2 phase A power factor
7226	SRC 2 Phase B PF	---	Source 2 phase B power factor
7227	SRC 2 Phase C PF	---	Source 2 phase C power factor
7232	SRC 3 P	Watts	Source 3 three-phase real power
7234	SRC 3 Pa	Watts	Source 3 phase A real power
7236	SRC 3 Pb	Watts	Source 3 phase B real power
7238	SRC 3 Pc	Watts	Source 3 phase C real power
7240	SRC 3 Q	Vars	Source 3 three-phase reactive power
7242	SRC 3 Qa	Vars	Source 3 phase A reactive power
7244	SRC 3 Qb	Vars	Source 3 phase B reactive power
7246	SRC 3 Qc	Vars	Source 3 phase C reactive power
7248	SRC 3 S	VA	Source 3 three-phase apparent power
7250	SRC 3 Sa	VA	Source 3 phase A apparent power
7252	SRC 3 Sb	VA	Source 3 phase B apparent power
7254	SRC 3 Sc	VA	Source 3 phase C apparent power
7256	SRC 3 PF	---	Source 3 three-phase power factor
7257	SRC 3 Phase A PF	---	Source 3 phase A power factor
7258	SRC 3 Phase B PF	---	Source 3 phase B power factor
7259	SRC 3 Phase C PF	---	Source 3 phase C power factor
7424	SRC 1 Pos Watthour	kWh	Source 1 positive Watthour
7426	SRC 1 Neg Watthour	Wh	Source 1 negative Watthour
7428	SRC 1 Pos varh	varh	Source 1 positive varhour
7430	SRC 1 Neg varh	varh	Source 1 negative varhour
7440	SRC 2 Pos Watthour	kWh	Source 2 positive Watthour
7442	SRC 2 Neg Watthour	Wh	Source 2 negative Watthour
7444	SRC 2 Pos varh	varh	Source 2 positive varhour
7446	SRC 2 Neg varh	varh	Source 2 negative varhour
7456	SRC 3 Pos Watthour	kWh	Source 3 positive Watthour
7458	SRC 3 Neg Watthour	kWh	Source 3 negative Watthour
7460	SRC 3 Pos varh	varh	Source 3 positive varhour
7462	SRC 3 Neg varh	varh	Source 3 negative varhour
7552	SRC 1 Frequency	Hz	Source 1 frequency
7554	SRC 2 Frequency	Hz	Source 2 frequency

A

Decimal address	FlexAnalog name	Units	Description
7556	SRC 3 Frequency	Hz	Source 3 frequency
7680	SRC 1 Demand Ia	Amps	Source 1 phase A current demand
7682	SRC 1 Demand Ib	Amps	Source 1 phase B current demand
7684	SRC 1 Demand Ic	Amps	Source 1 phase C current demand
7686	SRC 1 Demand Watt	Watts	Source 1 real power demand
7688	SRC 1 Demand var	Vars	Source 1 reactive power demand
7690	SRC 1 Demand Va	VA	Source 1 apparent power demand
7696	SRC 2 Demand Ia	Amps	Source 2 phase A current demand
7698	SRC 2 Demand Ib	Amps	Source 2 phase B current demand
7700	SRC 2 Demand Ic	Amps	Source 2 phase C current demand
7702	SRC 2 Demand Watt	Watts	Source 2 real power demand
7704	SRC 2 Demand var	Vars	Source 2 reactive power demand
7706	SRC 2 Demand Va	VA	Source 2 apparent power demand
7712	SRC 3 Demand Ia	Amps	Source 3 phase A current demand
7714	SRC 3 Demand Ib	Amps	Source 3 phase B current demand
7716	SRC 3 Demand Ic	Amps	Source 3 phase C current demand
7718	SRC 3 Demand Watt	Watts	Source 3 real power demand
7720	SRC 3 Demand var	Vars	Source 3 reactive power demand
7722	SRC 3 Demand Va	VA	Source 3 apparent power demand
8064	SRC 1 Va THD	%	Source 1 phase A voltage total harmonic distortion (THD)
8065	SRC 1 Va Harm[2]	%	Source 1 phase A voltage second harmonic
8066	SRC 1 Va Harm[3]	%	Source 1 phase A voltage third harmonic
8067	SRC 1 Va Harm[4]	%	Source 1 phase A voltage fourth harmonic
8068	SRC 1 Va Harm[5]	%	Source 1 phase A voltage fifth harmonic
8069	SRC 1 Va Harm[6]	%	Source 1 phase A voltage sixth harmonic
8070	SRC 1 Va Harm[7]	%	Source 1 phase A voltage seventh harmonic
8071	SRC 1 Va Harm[8]	%	Source 1 phase A voltage eighth harmonic
8072	SRC 1 Va Harm[9]	%	Source 1 phase A voltage ninth harmonic
8073	SRC 1 Va Harm[10]	%	Source 1 phase A voltage tenth harmonic
8074	SRC 1 Va Harm[11]	%	Source 1 phase A voltage eleventh harmonic
8075	SRC 1 Va Harm[12]	%	Source 1 phase A voltage twelfth harmonic
8076	SRC 1 Va Harm[13]	%	Source 1 phase A voltage thirteenth harmonic
8077	SRC 1 Va Harm[14]	%	Source 1 phase A voltage fourteenth harmonic
8078	SRC 1 Va Harm[15]	%	Source 1 phase A voltage fifteenth harmonic
8079	SRC 1 Va Harm[16]	%	Source 1 phase A voltage sixteenth harmonic
8080	SRC 1 Va Harm[17]	%	Source 1 phase A voltage seventeenth harmonic
8081	SRC 1 Va Harm[18]	%	Source 1 phase A voltage eighteenth harmonic
8082	SRC 1 Va Harm[19]	%	Source 1 phase A voltage nineteenth harmonic
8083	SRC 1 Va Harm[20]	%	Source 1 phase A voltage twentieth harmonic
8084	SRC 1 Va Harm[21]	%	Source 1 phase A voltage twenty-first harmonic
8085	SRC 1 Va Harm[22]	%	Source 1 phase A voltage twenty-second harmonic
8086	SRC 1 Va Harm[23]	%	Source 1 phase A voltage twenty-third harmonic
8087	SRC 1 Va Harm[24]	%	Source 1 phase A voltage twenty-fourth harmonic
8088	SRC 1 Va Harm[25]	%	Source 1 phase A voltage twenty-fifth harmonic
8089	SRC 1 Vb THD	%	Source 1 phase B voltage total harmonic distortion (THD)
8090	SRC 1 Vb Harm[2]	%	Source 1 phase B voltage second harmonic

Decimal address	FlexAnalog name	Units	Description
8091	SRC 1 Vb Harm[3]	%	Source 1 phase B voltage third harmonic
8092	SRC 1 Vb Harm[4]	%	Source 1 phase B voltage fourth harmonic
8093	SRC 1 Vb Harm[5]	%	Source 1 phase B voltage fifth harmonic
8094	SRC 1 Vb Harm[6]	%	Source 1 phase B voltage sixth harmonic
8095	SRC 1 Vb Harm[7]	%	Source 1 phase B voltage seventh harmonic
8096	SRC 1 Vb Harm[8]	%	Source 1 phase B voltage eighth harmonic
8097	SRC 1 Vb Harm[9]	%	Source 1 phase B voltage ninth harmonic
8098	SRC 1 Vb Harm[10]	%	Source 1 phase B voltage tenth harmonic
8099	SRC 1 Vb Harm[11]	%	Source 1 phase B voltage eleventh harmonic
8100	SRC 1 Vb Harm[12]	%	Source 1 phase B voltage twelfth harmonic
8101	SRC 1 Vb Harm[13]	%	Source 1 phase B voltage thirteenth harmonic
8102	SRC 1 Vb Harm[14]	%	Source 1 phase B voltage fourteenth harmonic
8103	SRC 1 Vb Harm[15]	%	Source 1 phase B voltage fifteenth harmonic
8104	SRC 1 Vb Harm[16]	%	Source 1 phase B voltage sixteenth harmonic
8105	SRC 1 Vb Harm[17]	%	Source 1 phase B voltage seventeenth harmonic
8106	SRC 1 Vb Harm[18]	%	Source 1 phase B voltage eighteenth harmonic
8107	SRC 1 Vb Harm[19]	%	Source 1 phase B voltage nineteenth harmonic
8108	SRC 1 Vb Harm[20]	%	Source 1 phase B voltage twentieth harmonic
8109	SRC 1 Vb Harm[21]	%	Source 1 phase B voltage twenty-first harmonic
8110	SRC 1 Vb Harm[22]	%	Source 1 phase B voltage twenty-second harmonic
8111	SRC 1 Vb Harm[23]	%	Source 1 phase B voltage twenty-third harmonic
8112	SRC 1 Vb Harm[24]	%	Source 1 phase B voltage twenty-fourth harmonic
8113	SRC 1 Vb Harm[25]	%	Source 1 phase B voltage twenty-fifth harmonic
8114	SRC 1 Vc THD	%	Source 1 phase C voltage total harmonic distortion (THD)
8115	SRC 1 Vc Harm[2]	%	Source 1 phase C voltage second harmonic
8116	SRC 1 Vc Harm[3]	%	Source 1 phase C voltage third harmonic
8117	SRC 1 Vc Harm[4]	%	Source 1 phase C voltage fourth harmonic
8118	SRC 1 Vc Harm[5]	%	Source 1 phase C voltage fifth harmonic
8119	SRC 1 Vc Harm[6]	%	Source 1 phase C voltage sixth harmonic
8120	SRC 1 Vc Harm[7]	%	Source 1 phase C voltage seventh harmonic
8121	SRC 1 Vc Harm[8]	%	Source 1 phase C voltage eighth harmonic
8122	SRC 1 Vc Harm[9]	%	Source 1 phase C voltage ninth harmonic
8123	SRC 1 Vc Harm[10]	%	Source 1 phase C voltage tenth harmonic
8124	SRC 1 Vc Harm[11]	%	Source 1 phase C voltage eleventh harmonic
8125	SRC 1 Vc Harm[12]	%	Source 1 phase C voltage twelfth harmonic
8126	SRC 1 Vc Harm[13]	%	Source 1 phase C voltage thirteenth harmonic
8127	SRC 1 Vc Harm[14]	%	Source 1 phase C voltage fourteenth harmonic
8128	SRC 1 Vc Harm[15]	%	Source 1 phase C voltage fifteenth harmonic
8129	SRC 1 Vc Harm[16]	%	Source 1 phase C voltage sixteenth harmonic
8130	SRC 1 Vc Harm[17]	%	Source 1 phase C voltage seventeenth harmonic
8131	SRC 1 Vc Harm[18]	%	Source 1 phase C voltage eighteenth harmonic
8132	SRC 1 Vc Harm[19]	%	Source 1 phase C voltage nineteenth harmonic
8133	SRC 1 Vc Harm[20]	%	Source 1 phase C voltage twentieth harmonic
8134	SRC 1 Vc Harm[21]	%	Source 1 phase C voltage twenty-first harmonic
8135	SRC 1 Vc Harm[22]	%	Source 1 phase C voltage twenty-second harmonic
8136	SRC 1 Vc Harm[23]	%	Source 1 phase C voltage twenty-third harmonic

A

Decimal address	FlexAnalog name	Units	Description
8137	SRC 1 Vc Harm[24]	%	Source 1 phase C voltage twenty-fourth harmonic
8138	SRC 1 Vc Harm[25]	%	Source 1 phase C voltage twenty-fifth harmonic
8139	SRC 2 Va THD	%	Source 2 phase A voltage total harmonic distortion (THD)
8140	SRC 2 Va Harm[2]	%	Source 2 phase A voltage second harmonic
8141	SRC 2 Va Harm[3]	%	Source 2 phase A voltage third harmonic
8142	SRC 2 Va Harm[4]	%	Source 2 phase A voltage fourth harmonic
8143	SRC 2 Va Harm[5]	%	Source 2 phase A voltage fifth harmonic
8144	SRC 2 Va Harm[6]	%	Source 2 phase A voltage sixth harmonic
8145	SRC 2 Va Harm[7]	%	Source 2 phase A voltage seventh harmonic
8146	SRC 2 Va Harm[8]	%	Source 2 phase A voltage eighth harmonic
8147	SRC 2 Va Harm[9]	%	Source 2 phase A voltage ninth harmonic
8148	SRC 2 Va Harm[10]	%	Source 2 phase A voltage tenth harmonic
8149	SRC 2 Va Harm[11]	%	Source 2 phase A voltage eleventh harmonic
8150	SRC 2 Va Harm[12]	%	Source 2 phase A voltage twelfth harmonic
8151	SRC 2 Va Harm[13]	%	Source 2 phase A voltage thirteenth harmonic
8152	SRC 2 Va Harm[14]	%	Source 2 phase A voltage fourteenth harmonic
8153	SRC 2 Va Harm[15]	%	Source 2 phase A voltage fifteenth harmonic
8154	SRC 2 Va Harm[16]	%	Source 2 phase A voltage sixteenth harmonic
8155	SRC 2 Va Harm[17]	%	Source 2 phase A voltage seventeenth harmonic
8156	SRC 2 Va Harm[18]	%	Source 2 phase A voltage eighteenth harmonic
8157	SRC 2 Va Harm[19]	%	Source 2 phase A voltage nineteenth harmonic
8158	SRC 2 Va Harm[20]	%	Source 2 phase A voltage twentieth harmonic
8159	SRC 2 Va Harm[21]	%	Source 2 phase A voltage twenty-first harmonic
8160	SRC 2 Va Harm[22]	%	Source 2 phase A voltage twenty-second harmonic
8161	SRC 2 Va Harm[23]	%	Source 2 phase A voltage twenty-third harmonic
8162	SRC 2 Va Harm[24]	%	Source 2 phase A voltage twenty-fourth harmonic
8163	SRC 2 Va Harm[25]	%	Source 2 phase A voltage twenty-fifth harmonic
8164	SRC 2 Vb THD	%	Source 2 phase B voltage total harmonic distortion (THD)
8165	SRC 2 Vb Harm[2]	%	Source 2 phase B voltage second harmonic
8166	SRC 2 Vb Harm[3]	%	Source 2 phase B voltage third harmonic
8167	SRC 2 Vb Harm[4]	%	Source 2 phase B voltage fourth harmonic
8168	SRC 2 Vb Harm[5]	%	Source 2 phase B voltage fifth harmonic
8169	SRC 2 Vb Harm[6]	%	Source 2 phase B voltage sixth harmonic
8170	SRC 2 Vb Harm[7]	%	Source 2 phase B voltage seventh harmonic
8171	SRC 2 Vb Harm[8]	%	Source 2 phase B voltage eighth harmonic
8172	SRC 2 Vb Harm[9]	%	Source 2 phase B voltage ninth harmonic
8173	SRC 2 Vb Harm[10]	%	Source 2 phase B voltage tenth harmonic
8174	SRC 2 Vb Harm[11]	%	Source 2 phase B voltage eleventh harmonic
8175	SRC 2 Vb Harm[12]	%	Source 2 phase B voltage twelfth harmonic
8176	SRC 2 Vb Harm[13]	%	Source 2 phase B voltage thirteenth harmonic
8177	SRC 2 Vb Harm[14]	%	Source 2 phase B voltage fourteenth harmonic
8178	SRC 2 Vb Harm[15]	%	Source 2 phase B voltage fifteenth harmonic
8179	SRC 2 Vb Harm[16]	%	Source 2 phase B voltage sixteenth harmonic
8180	SRC 2 Vb Harm[17]	%	Source 2 phase B voltage seventeenth harmonic
8181	SRC 2 Vb Harm[18]	%	Source 2 phase B voltage eighteenth harmonic
8182	SRC 2 Vb Harm[19]	%	Source 2 phase B voltage nineteenth harmonic

Decimal address	FlexAnalog name	Units	Description
8183	SRC 2 Vb Harm[20]	%	Source 2 phase B voltage twentieth harmonic
8184	SRC 2 Vb Harm[21]	%	Source 2 phase B voltage twenty-first harmonic
8185	SRC 2 Vb Harm[22]	%	Source 2 phase B voltage twenty-second harmonic
8186	SRC 2 Vb Harm[23]	%	Source 2 phase B voltage twenty-third harmonic
8187	SRC 2 Vb Harm[24]	%	Source 2 phase B voltage twenty-fourth harmonic
8188	SRC 2 Vb Harm[25]	%	Source 2 phase B voltage twenty-fifth harmonic
8189	SRC 2 Vc THD	%	Source 2 phase C voltage total harmonic distortion (THD)
8190	SRC 2 Vc Harm[2]	%	Source 2 phase C voltage second harmonic
8191	SRC 2 Vc Harm[3]	%	Source 2 phase C voltage third harmonic
8192	SRC 2 Vc Harm[4]	%	Source 2 phase C voltage fourth harmonic
8193	SRC 2 Vc Harm[5]	%	Source 2 phase C voltage fifth harmonic
8194	SRC 2 Vc Harm[6]	%	Source 2 phase C voltage sixth harmonic
8195	SRC 2 Vc Harm[7]	%	Source 2 phase C voltage seventh harmonic
8196	SRC 2 Vc Harm[8]	%	Source 2 phase C voltage eighth harmonic
8197	SRC 2 Vc Harm[9]	%	Source 2 phase C voltage ninth harmonic
8198	SRC 2 Vc Harm[10]	%	Source 2 phase C voltage tenth harmonic
8199	SRC 2 Vc Harm[11]	%	Source 2 phase C voltage eleventh harmonic
8200	SRC 2 Vc Harm[12]	%	Source 2 phase C voltage twelfth harmonic
8201	SRC 2 Vc Harm[13]	%	Source 2 phase C voltage thirteenth harmonic
8202	SRC 2 Vc Harm[14]	%	Source 2 phase C voltage fourteenth harmonic
8203	SRC 2 Vc Harm[15]	%	Source 2 phase C voltage fifteenth harmonic
8204	SRC 2 Vc Harm[16]	%	Source 2 phase C voltage sixteenth harmonic
8205	SRC 2 Vc Harm[17]	%	Source 2 phase C voltage seventeenth harmonic
8206	SRC 2 Vc Harm[18]	%	Source 2 phase C voltage eighteenth harmonic
8207	SRC 2 Vc Harm[19]	%	Source 2 phase C voltage nineteenth harmonic
8208	SRC 2 Vc Harm[20]	%	Source 2 phase C voltage twentieth harmonic
8209	SRC 2 Vc Harm[21]	%	Source 2 phase C voltage twenty-first harmonic
8210	SRC 2 Vc Harm[22]	%	Source 2 phase C voltage twenty-second harmonic
8211	SRC 2 Vc Harm[23]	%	Source 2 phase C voltage twenty-third harmonic
8212	SRC 2 Vc Harm[24]	%	Source 2 phase C voltage twenty-fourth harmonic
8213	SRC 2 Vc Harm[25]	%	Source 2 phase C voltage twenty-fifth harmonic
8672	Brk 1 Arc Amp A	kA2-cyc	Breaker 1 arcing amp phase A
8674	Brk 1 Arc Amp B	kA2-cyc	Breaker 1 arcing amp phase B
8676	Brk 1 Arc Amp C	kA2-cyc	Breaker 1 arcing amp phase C
8678	Brk 1 Op Time A	ms	Breaker 1 operating time phase A
8679	Brk 1 Op Time B	ms	Breaker 1 operating time phase B
8680	Brk 1 Op Time C	ms	Breaker 1 operating time phase C
8681	Brk 1 Op Time	ms	Breaker 1 operating time
8682	Brk 2 Arc Amp A	kA2-cyc	Breaker 2 arcing amp phase A
8684	Brk 2 Arc Amp B	kA2-cyc	Breaker 2 arcing amp phase B
8686	Brk 2 Arc Amp C	kA2-cyc	Breaker 2 arcing amp phase C
8688	Brk 2 Op Time A	ms	Breaker 2 operating time phase A
8689	Brk 2 Op Time B	ms	Breaker 2 operating time phase B
8690	Brk 2 Op Time C	ms	Breaker 2 operating time phase C
8691	Brk 2 Op Time	ms	Breaker 2 operating time
8784	HIZ Status	---	High impedance fault detection status

A

Decimal address	FlexAnalog name	Units	Description
8785	HIZ Phase A Arc Conf	---	High impedance fault detection phase A arc confidence
8786	HIZ Phase B Arc Conf	---	High impedance fault detection phase B arc confidence
8787	HIZ Phase C Arc Conf	---	High impedance fault detection phase C arc confidence
8788	HIZ Neutral Arc Conf	---	High impedance fault detection neutral arc confidence
9024	Prefault Ia Mag [0]	Amps	Fault 1 pre-fault phase A current magnitude
9026	Prefault Ia Ang [0]	Degrees	Fault 1 pre-fault phase A current angle
9027	Prefault Ib Mag [0]	Amps	Fault 1 pre-fault phase B current magnitude
9029	Prefault Ib Ang [0]	Degrees	Fault 1 pre-fault phase B current angle
9030	Prefault Ic Mag [0]	Amps	Fault 1 pre-fault phase C current magnitude
9032	Prefault Ic Ang [0]	Degrees	Fault 1 pre-fault phase C current angle
9033	Prefault Va Mag [0]	Volts	Fault 1 pre-fault phase A voltage magnitude
9035	Prefault Va Ang [0]	Degrees	Fault 1 pre-fault phase A voltage angle
9036	Prefault Vb Mag [0]	Volts	Fault 1 pre-fault phase B voltage magnitude
9038	Prefault Vb Ang [0]	Degrees	Fault 1 pre-fault phase B voltage angle
9039	Prefault Vc Mag [0]	Volts	Fault 1 pre-fault phase C voltage magnitude
9041	Prefault Vc Ang [0]	Degrees	Fault 1 pre-fault phase C voltage angle
9042	Postfault Ia Mag [0]	Amps	Fault 1 post-fault phase A current magnitude
9044	Postfault Ia Ang [0]	Degrees	Fault 1 post-fault phase A current angle
9045	Postfault Ib Mag [0]	Amps	Fault 1 post-fault phase B current magnitude
9047	Postfault Ib Ang [0]	Degrees	Fault 1 post-fault phase B current angle
9048	Postfault Ic Mag [0]	Amps	Fault 1 post-fault phase C current magnitude
9050	Postfault Ic Ang [0]	Degrees	Fault 1 post-fault phase C current angle
9051	Postfault Va Mag [0]	Volts	Fault 1 post-fault phase A voltage magnitude
9053	Postfault Va Ang [0]	Degrees	Fault 1 post-fault phase A voltage angle
9054	Postfault Vb Mag [0]	Volts	Fault 1 post-fault phase B voltage magnitude
9056	Postfault Vb Ang [0]	Degrees	Fault 1 post-fault phase B voltage angle
9057	Postfault Vc Mag [0]	Volts	Fault 1 post-fault phase C voltage magnitude
9059	Postfault Vc Ang [0]	Degrees	Fault 1 post-fault phase C voltage angle
9060	Fault Type [0]	---	Fault 1 type
9061	Fault Location [0]	---	Fault 1 location
9216	Synchchk 1 Delta V	Volts	Synchrocheck 1 delta voltage
9218	Synchchk 1 Delta F	Hz	Synchrocheck 1 delta frequency
9219	Synchchk 1 Delta Phs	Degrees	Synchrocheck 1 delta phase
9220	Synchchk 2 Delta V	Volts	Synchrocheck 2 delta voltage
9222	Synchchk 2 Delta F	Hz	Synchrocheck 2 delta frequency
9223	Synchchk 2 Delta Phs	Degrees	Synchrocheck 2 delta phase
9224	Synchchk 3 Delta V	Volts	Synchrocheck 3 delta voltage
9226	Synchchk 3 Delta F	Hz	Synchrocheck 3 delta frequency
9227	Synchchk 3 Delta Phs	Degrees	Synchrocheck 3 delta phase
9228	Synchchk 4 Delta V	Volts	Synchrocheck 4 delta voltage
9230	Synchchk 4 Delta F	Hz	Synchrocheck 4 delta frequency
9231	Synchchk 4 Delta Phs	Degrees	Synchrocheck 4 delta phase
9581	PMU 1 Va Mag	Volts	Phasor measurement unit 1 phase A voltage magnitude
9583	PMU 1 Va Angle	Degrees	Phasor measurement unit 1 phase A voltage angle
9584	PMU 1 Vb Mag	Volts	Phasor measurement unit 1 phase B voltage magnitude
9586	PMU 1 Vb Angle	Degrees	Phasor measurement unit 1 phase B voltage angle

A

Decimal address	FlexAnalog name	Units	Description
9587	PMU 1 Vc Mag	Volts	Phasor measurement unit 1 phase C voltage magnitude
9589	PMU 1 Vc Angle	Degrees	Phasor measurement unit 1 phase C voltage angle
9590	PMU 1 Vx Mag	Volts	Phasor measurement unit 1 auxiliary voltage magnitude
9592	PMU 1 Vx Angle	Degrees	Phasor measurement unit 1 auxiliary voltage angle
9593	PMU 1 V1 Mag	Volts	Phasor measurement unit 1 positive-sequence voltage magnitude
9595	PMU 1 V1 Angle	Degrees	Phasor measurement unit 1 positive-sequence voltage angle
9596	PMU 1 V2 Mag	Volts	Phasor measurement unit 1 negative-sequence voltage magnitude
9598	PMU 1 V2 Angle	Degrees	Phasor measurement unit 1 negative-sequence voltage angle
9599	PMU 1 V0 Mag	Volts	Phasor measurement unit 1 zero-sequence voltage magnitude
9601	PMU 1 V0 Angle	Degrees	Phasor measurement unit 1 zero-sequence voltage angle
9602	PMU 1 Ia Mag	Amps	Phasor measurement unit 1 phase A current magnitude
9604	PMU 1 Ia Angle	Degrees	Phasor measurement unit 1 phase A current angle
9605	PMU 1 Ib Mag	Amps	Phasor measurement unit 1 phase B current magnitude
9607	PMU 1 Ib Angle	Degrees	Phasor measurement unit 1 phase B current angle
9608	PMU 1 Ic Mag	Amps	Phasor measurement unit 1 phase C current magnitude
9610	PMU 1 Ic Angle	Degrees	Phasor measurement unit 1 phase C current angle
9611	PMU 1 Ig Mag	Amps	Phasor measurement unit 1 ground current magnitude
9613	PMU 1 Ig Angle	Degrees	Phasor measurement unit 1 ground current angle
9614	PMU 1 I1 Mag	Amps	Phasor measurement unit 1 positive-sequence current magnitude
9616	PMU 1 I1 Angle	Degrees	Phasor measurement unit 1 positive-sequence current angle
9617	PMU 1 I2 Mag	Amps	Phasor measurement unit 1 negative-sequence current magnitude
9619	PMU 1 I2 Angle	Degrees	Phasor measurement unit 1 negative-sequence current angle
9620	PMU 1 I0 Mag	Amps	Phasor measurement unit 1 zero-sequence current magnitude
9622	PMU 1 I0 Angle	Degrees	Phasor measurement unit 1 zero-sequence current angle
9623	PMU 1 Freq	Hz	Phasor measurement unit 1 frequency
9625	PMU 1 df dt	Hz/s	Phasor measurement unit 1 rate of change of frequency
9626	PMU 1 Conf Ch	---	Phasor measurement unit 1 configuration change counter
10240	SRC 1 Ia THD	%	Source 1 phase A current total harmonic distortion
10241	SRC 1 Ia Harm[2]	%	Source 1 phase A current second harmonic
10242	SRC 1 Ia Harm[3]	%	Source 1 phase A current third harmonic
10243	SRC 1 Ia Harm[4]	%	Source 1 phase A current fourth harmonic
10244	SRC 1 Ia Harm[5]	%	Source 1 phase A current fifth harmonic
10245	SRC 1 Ia Harm[6]	%	Source 1 phase A current sixth harmonic
10246	SRC 1 Ia Harm[7]	%	Source 1 phase A current seventh harmonic
10247	SRC 1 Ia Harm[8]	%	Source 1 phase A current eighth harmonic
10248	SRC 1 Ia Harm[9]	%	Source 1 phase A current ninth harmonic
10249	SRC 1 Ia Harm[10]	%	Source 1 phase A current tenth harmonic
10250	SRC 1 Ia Harm[11]	%	Source 1 phase A current eleventh harmonic
10251	SRC 1 Ia Harm[12]	%	Source 1 phase A current twelfth harmonic
10252	SRC 1 Ia Harm[13]	%	Source 1 phase A current thirteenth harmonic
10253	SRC 1 Ia Harm[14]	%	Source 1 phase A current fourteenth harmonic
10254	SRC 1 Ia Harm[15]	%	Source 1 phase A current fifteenth harmonic
10255	SRC 1 Ia Harm[16]	%	Source 1 phase A current sixteenth harmonic
10256	SRC 1 Ia Harm[17]	%	Source 1 phase A current seventeenth harmonic
10257	SRC 1 Ia Harm[18]	%	Source 1 phase A current eighteenth harmonic
10258	SRC 1 Ia Harm[19]	%	Source 1 phase A current nineteenth harmonic

A

Decimal address	FlexAnalog name	Units	Description
10259	SRC 1 Ia Harm[20]	%	Source 1 phase A current twentieth harmonic
10260	SRC 1 Ia Harm[21]	%	Source 1 phase A current twenty-first harmonic
10261	SRC 1 Ia Harm[22]	%	Source 1 phase A current twenty-second harmonic
10262	SRC 1 Ia Harm[23]	%	Source 1 phase A current twenty-third harmonic
10263	SRC 1 Ia Harm[24]	%	Source 1 phase A current twenty-fourth harmonic
10264	SRC 1 Ia Harm[25]	%	Source 1 phase A current twenty-fifth harmonic
10273	SRC 1 Ib THD	%	Source 1 phase B current total harmonic distortion
10274	SRC 1 Ib Harm[2]	%	Source 1 phase B current second harmonic
10275	SRC 1 Ib Harm[3]	%	Source 1 phase B current third harmonic
10276	SRC 1 Ib Harm[4]	%	Source 1 phase B current fourth harmonic
10277	SRC 1 Ib Harm[5]	%	Source 1 phase B current fifth harmonic
10278	SRC 1 Ib Harm[6]	%	Source 1 phase B current sixth harmonic
10279	SRC 1 Ib Harm[7]	%	Source 1 phase B current seventh harmonic
10280	SRC 1 Ib Harm[8]	%	Source 1 phase B current eighth harmonic
10281	SRC 1 Ib Harm[9]	%	Source 1 phase B current ninth harmonic
10282	SRC 1 Ib Harm[10]	%	Source 1 phase B current tenth harmonic
10283	SRC 1 Ib Harm[11]	%	Source 1 phase B current eleventh harmonic
10284	SRC 1 Ib Harm[12]	%	Source 1 phase B current twelfth harmonic
10285	SRC 1 Ib Harm[13]	%	Source 1 phase B current thirteenth harmonic
10286	SRC 1 Ib Harm[14]	%	Source 1 phase B current fourteenth harmonic
10287	SRC 1 Ib Harm[15]	%	Source 1 phase B current fifteenth harmonic
10288	SRC 1 Ib Harm[16]	%	Source 1 phase B current sixteenth harmonic
10289	SRC 1 Ib Harm[17]	%	Source 1 phase B current seventeenth harmonic
10290	SRC 1 Ib Harm[18]	%	Source 1 phase B current eighteenth harmonic
10291	SRC 1 Ib Harm[19]	%	Source 1 phase B current nineteenth harmonic
10292	SRC 1 Ib Harm[20]	%	Source 1 phase B current twentieth harmonic
10293	SRC 1 Ib Harm[21]	%	Source 1 phase B current twenty-first harmonic
10294	SRC 1 Ib Harm[22]	%	Source 1 phase B current twenty-second harmonic
10295	SRC 1 Ib Harm[23]	%	Source 1 phase B current twenty-third harmonic
10296	SRC 1 Ib Harm[24]	%	Source 1 phase B current twenty-fourth harmonic
10297	SRC 1 Ib Harm[25]	%	Source 1 phase B current twenty-fifth harmonic
10306	SRC 1 Ic THD	%	Source 1 phase C current total harmonic distortion
10307	SRC 1 Ic Harm[2]	%	Source 1 phase C current second harmonic
10308	SRC 1 Ic Harm[3]	%	Source 1 phase C current third harmonic
10309	SRC 1 Ic Harm[4]	%	Source 1 phase C current fourth harmonic
10310	SRC 1 Ic Harm[5]	%	Source 1 phase C current fifth harmonic
10311	SRC 1 Ic Harm[6]	%	Source 1 phase C current sixth harmonic
10312	SRC 1 Ic Harm[7]	%	Source 1 phase C current seventh harmonic
10313	SRC 1 Ic Harm[8]	%	Source 1 phase C current eighth harmonic
10314	SRC 1 Ic Harm[9]	%	Source 1 phase C current ninth harmonic
10315	SRC 1 Ic Harm[10]	%	Source 1 phase C current tenth harmonic
10316	SRC 1 Ic Harm[11]	%	Source 1 phase C current eleventh harmonic
10317	SRC 1 Ic Harm[12]	%	Source 1 phase C current twelfth harmonic
10318	SRC 1 Ic Harm[13]	%	Source 1 phase C current thirteenth harmonic
10319	SRC 1 Ic Harm[14]	%	Source 1 phase C current fourteenth harmonic
10320	SRC 1 Ic Harm[15]	%	Source 1 phase C current fifteenth harmonic

Decimal address	FlexAnalog name	Units	Description
10321	SRC 1 Ic Harm[16]	%	Source 1 phase C current sixteenth harmonic
10322	SRC 1 Ic Harm[17]	%	Source 1 phase C current seventeenth harmonic
10323	SRC 1 Ic Harm[18]	%	Source 1 phase C current eighteenth harmonic
10324	SRC 1 Ic Harm[19]	%	Source 1 phase C current nineteenth harmonic
10325	SRC 1 Ic Harm[20]	%	Source 1 phase C current twentieth harmonic
10326	SRC 1 Ic Harm[21]	%	Source 1 phase C current twenty-first harmonic
10327	SRC 1 Ic Harm[22]	%	Source 1 phase C current twenty-second harmonic
10328	SRC 1 Ic Harm[23]	%	Source 1 phase C current twenty-third harmonic
10329	SRC 1 Ic Harm[24]	%	Source 1 phase C current twenty-fourth harmonic
10330	SRC 1 Ic Harm[25]	%	Source 1 phase C current twenty-fifth harmonic
10339	SRC 2 Ia THD	%	Source 2 phase A current total harmonic distortion
10340	SRC 2 Ia Harm[2]	%	Source 2 phase A current second harmonic
10341	SRC 2 Ia Harm[3]	%	Source 2 phase A current third harmonic
10342	SRC 2 Ia Harm[4]	%	Source 2 phase A current fourth harmonic
10343	SRC 2 Ia Harm[5]	%	Source 2 phase A current fifth harmonic
10344	SRC 2 Ia Harm[6]	%	Source 2 phase A current sixth harmonic
10345	SRC 2 Ia Harm[7]	%	Source 2 phase A current seventh harmonic
10346	SRC 2 Ia Harm[8]	%	Source 2 phase A current eighth harmonic
10347	SRC 2 Ia Harm[9]	%	Source 2 phase A current ninth harmonic
10348	SRC 2 Ia Harm[10]	%	Source 2 phase A current tenth harmonic
10349	SRC 2 Ia Harm[11]	%	Source 2 phase A current eleventh harmonic
10350	SRC 2 Ia Harm[12]	%	Source 2 phase A current twelfth harmonic
10351	SRC 2 Ia Harm[13]	%	Source 2 phase A current thirteenth harmonic
10352	SRC 2 Ia Harm[14]	%	Source 2 phase A current fourteenth harmonic
10353	SRC 2 Ia Harm[15]	%	Source 2 phase A current fifteenth harmonic
10354	SRC 2 Ia Harm[16]	%	Source 2 phase A current sixteenth harmonic
10355	SRC 2 Ia Harm[17]	%	Source 2 phase A current seventeenth harmonic
10356	SRC 2 Ia Harm[18]	%	Source 2 phase A current eighteenth harmonic
10357	SRC 2 Ia Harm[19]	%	Source 2 phase A current nineteenth harmonic
10358	SRC 2 Ia Harm[20]	%	Source 2 phase A current twentieth harmonic
10359	SRC 2 Ia Harm[21]	%	Source 2 phase A current twenty-first harmonic
10360	SRC 2 Ia Harm[22]	%	Source 2 phase A current twenty-second harmonic
10361	SRC 2 Ia Harm[23]	%	Source 2 phase A current twenty-third harmonic
10362	SRC 2 Ia Harm[24]	%	Source 2 phase A current twenty-fourth harmonic
10363	SRC 2 Ia Harm[25]	%	Source 2 phase A current twenty-fifth harmonic
10372	SRC 2 Ib THD	%	Source 2 phase B current total harmonic distortion
10373	SRC 2 Ib Harm[2]	%	Source 2 phase B current second harmonic
10374	SRC 2 Ib Harm[3]	%	Source 2 phase B current third harmonic
10375	SRC 2 Ib Harm[4]	%	Source 2 phase B current fourth harmonic
10376	SRC 2 Ib Harm[5]	%	Source 2 phase B current fifth harmonic
10377	SRC 2 Ib Harm[6]	%	Source 2 phase B current sixth harmonic
10378	SRC 2 Ib Harm[7]	%	Source 2 phase B current seventh harmonic
10379	SRC 2 Ib Harm[8]	%	Source 2 phase B current eighth harmonic
10380	SRC 2 Ib Harm[9]	%	Source 2 phase B current ninth harmonic
10381	SRC 2 Ib Harm[10]	%	Source 2 phase B current tenth harmonic
10382	SRC 2 Ib Harm[11]	%	Source 2 phase B current eleventh harmonic

A

Decimal address	FlexAnalog name	Units	Description
10383	SRC 2 Ib Harm[12]	%	Source 2 phase B current twelfth harmonic
10384	SRC 2 Ib Harm[13]	%	Source 2 phase B current thirteenth harmonic
10385	SRC 2 Ib Harm[14]	%	Source 2 phase B current fourteenth harmonic
10386	SRC 2 Ib Harm[15]	%	Source 2 phase B current fifteenth harmonic
10387	SRC 2 Ib Harm[16]	%	Source 2 phase B current sixteenth harmonic
10388	SRC 2 Ib Harm[17]	%	Source 2 phase B current seventeenth harmonic
10389	SRC 2 Ib Harm[18]	%	Source 2 phase B current eighteenth harmonic
10390	SRC 2 Ib Harm[19]	%	Source 2 phase B current nineteenth harmonic
10391	SRC 2 Ib Harm[20]	%	Source 2 phase B current twentieth harmonic
10392	SRC 2 Ib Harm[21]	%	Source 2 phase B current twenty-first harmonic
10393	SRC 2 Ib Harm[22]	%	Source 2 phase B current twenty-second harmonic
10394	SRC 2 Ib Harm[23]	%	Source 2 phase B current twenty-third harmonic
10395	SRC 2 Ib Harm[24]	%	Source 2 phase B current twenty-fourth harmonic
10396	SRC 2 Ib Harm[25]	%	Source 2 phase B current twenty-fifth harmonic
10405	SRC 2 Ic THD	%	Source 2 phase C current total harmonic distortion
10406	SRC 2 Ic Harm[2]	%	Source 2 phase C current second harmonic
10407	SRC 2 Ic Harm[3]	%	Source 2 phase C current third harmonic
10408	SRC 2 Ic Harm[4]	%	Source 2 phase C current fourth harmonic
10409	SRC 2 Ic Harm[5]	%	Source 2 phase C current fifth harmonic
10410	SRC 2 Ic Harm[6]	%	Source 2 phase C current sixth harmonic
10411	SRC 2 Ic Harm[7]	%	Source 2 phase C current seventh harmonic
10412	SRC 2 Ic Harm[8]	%	Source 2 phase C current eighth harmonic
10413	SRC 2 Ic Harm[9]	%	Source 2 phase C current ninth harmonic
10414	SRC 2 Ic Harm[10]	%	Source 2 phase C current tenth harmonic
10415	SRC 2 Ic Harm[11]	%	Source 2 phase C current eleventh harmonic
10416	SRC 2 Ic Harm[12]	%	Source 2 phase C current twelfth harmonic
10417	SRC 2 Ic Harm[13]	%	Source 2 phase C current thirteenth harmonic
10418	SRC 2 Ic Harm[14]	%	Source 2 phase C current fourteenth harmonic
10419	SRC 2 Ic Harm[15]	%	Source 2 phase C current fifteenth harmonic
10420	SRC 2 Ic Harm[16]	%	Source 2 phase C current sixteenth harmonic
10421	SRC 2 Ic Harm[17]	%	Source 2 phase C current seventeenth harmonic
10422	SRC 2 Ic Harm[18]	%	Source 2 phase C current eighteenth harmonic
10423	SRC 2 Ic Harm[19]	%	Source 2 phase C current nineteenth harmonic
10424	SRC 2 Ic Harm[20]	%	Source 2 phase C current twentieth harmonic
10425	SRC 2 Ic Harm[21]	%	Source 2 phase C current twenty-first harmonic
10426	SRC 2 Ic Harm[22]	%	Source 2 phase C current twenty-second harmonic
10427	SRC 2 Ic Harm[23]	%	Source 2 phase C current twenty-third harmonic
10428	SRC 2 Ic Harm[24]	%	Source 2 phase C current twenty-fourth harmonic
10429	SRC 2 Ic Harm[25]	%	Source 2 phase C current twenty-fifth harmonic
12306	Oscill Num Triggers	---	Oscillography number of triggers
13504	DCmA Inputs 1 Value	mA	DCmA input 1 actual value
13506	DCmA Inputs 2 Value	mA	DCmA input 2 actual value
13508	DCmA Inputs 3 Value	mA	DCmA input 3 actual value
13510	DCmA Inputs 4 Value	mA	DCmA input 4 actual value
13512	DCmA Inputs 5 Value	mA	DCmA input 5 actual value
13514	DCmA Inputs 6 Value	mA	DCmA input 6 actual value

Decimal address	FlexAnalog name	Units	Description
13516	DCmA Inputs 7 Value	mA	DCmA input 7 actual value
13518	DCmA Inputs 8 Value	mA	DCmA input 8 actual value
13520	DCmA Inputs 9 Value	mA	DCmA input 9 actual value
13522	DCmA Inputs 10 Value	mA	DCmA input 10 actual value
13524	DCmA Inputs 11 Value	mA	DCmA input 11 actual value
13526	DCmA Inputs 12 Value	mA	DCmA input 12 actual value
13528	DCmA Inputs 13 Value	mA	DCmA input 13 actual value
13530	DCmA Inputs 14 Value	mA	DCmA input 14 actual value
13532	DCmA Inputs 15 Value	mA	DCmA input 15 actual value
13534	DCmA Inputs 16 Value	mA	DCmA input 16 actual value
13536	DCmA Inputs 17 Value	mA	DCmA input 17 actual value
13538	DCmA Inputs 18 Value	mA	DCmA input 18 actual value
13540	DCmA Inputs 19 Value	mA	DCmA input 19 actual value
13542	DCmA Inputs 20 Value	mA	DCmA input 20 actual value
13544	DCmA Inputs 21 Value	mA	DCmA input 21 actual value
13546	DCmA Inputs 22 Value	mA	DCmA input 22 actual value
13548	DCmA Inputs 23 Value	mA	DCmA input 23 actual value
13550	DCmA Inputs 24 Value	mA	DCmA input 24 actual value
13552	RTD Inputs 1 Value	---	RTD input 1 actual value
13553	RTD Inputs 2 Value	---	RTD input 2 actual value
13554	RTD Inputs 3 Value	---	RTD input 3 actual value
13555	RTD Inputs 4 Value	---	RTD input 4 actual value
13556	RTD Inputs 5 Value	---	RTD input 5 actual value
13557	RTD Inputs 6 Value	---	RTD input 6 actual value
13558	RTD Inputs 7 Value	---	RTD input 7 actual value
13559	RTD Inputs 8 Value	---	RTD input 8 actual value
13560	RTD Inputs 9 Value	---	RTD input 9 actual value
13561	RTD Inputs 10 Value	---	RTD input 10 actual value
13562	RTD Inputs 11 Value	---	RTD input 11 actual value
13563	RTD Inputs 12 Value	---	RTD input 12 actual value
13564	RTD Inputs 13 Value	---	RTD input 13 actual value
13565	RTD Inputs 14 Value	---	RTD input 14 actual value
13566	RTD Inputs 15 Value	---	RTD input 15 actual value
13567	RTD Inputs 16 Value	---	RTD input 16 actual value
13568	RTD Inputs 17 Value	---	RTD input 17 actual value
13569	RTD Inputs 18 Value	---	RTD input 18 actual value
13570	RTD Inputs 19 Value	---	RTD input 19 actual value
13571	RTD Inputs 20 Value	---	RTD input 20 actual value
13572	RTD Inputs 21 Value	---	RTD input 21 actual value
13573	RTD Inputs 22 Value	---	RTD input 22 actual value
13574	RTD Inputs 23 Value	---	RTD input 23 actual value
13575	RTD Inputs 24 Value	---	RTD input 24 actual value
13576	RTD Inputs 25 Value	---	RTD input 25 actual value
13577	RTD Inputs 26 Value	---	RTD input 26 actual value
13578	RTD Inputs 27 Value	---	RTD input 27 actual value
13579	RTD Inputs 28 Value	---	RTD input 28 actual value

A

Decimal address	FlexAnalog name	Units	Description
13580	RTD Inputs 29 Value	---	RTD input 29 actual value
13581	RTD Inputs 30 Value	---	RTD input 30 actual value
13582	RTD Inputs 31 Value	---	RTD input 31 actual value
13583	RTD Inputs 32 Value	---	RTD input 32 actual value
13584	RTD Inputs 33 Value	---	RTD input 33 actual value
13585	RTD Inputs 34 Value	---	RTD input 34 actual value
13586	RTD Inputs 35 Value	---	RTD input 35 actual value
13587	RTD Inputs 36 Value	---	RTD input 36 actual value
13588	RTD Inputs 37 Value	---	RTD input 37 actual value
13589	RTD Inputs 38 Value	---	RTD input 38 actual value
13590	RTD Inputs 39 Value	---	RTD input 39 actual value
13591	RTD Inputs 40 Value	---	RTD input 40 actual value
13592	RTD Inputs 41 Value	---	RTD input 41 actual value
13593	RTD Inputs 42 Value	---	RTD input 42 actual value
13594	RTD Inputs 43 Value	---	RTD input 43 actual value
13595	RTD Inputs 44 Value	---	RTD input 44 actual value
13596	RTD Inputs 45 Value	---	RTD input 45 actual value
13597	RTD Inputs 46 Value	---	RTD input 46 actual value
13598	RTD Inputs 47 Value	---	RTD input 47 actual value
13599	RTD Inputs 48 Value	---	RTD input 48 actual value
13600	Ohm Inputs 1 Value	Ohms	Ohm inputs 1 value
13601	Ohm Inputs 2 Value	Ohms	Ohm inputs 2 value
14189	PTP–IRIG-B Delta	ns	PTP time minus IRIG-B time
24432	Communications Group	---	Groups communications group
24447	Active Setting Group	---	Current setting group
32768	Tracking Frequency	Hz	Tracking frequency
39168	FlexElement 1 Value	---	FlexElement 1 actual value
39170	FlexElement 2 Value	---	FlexElement 2 actual value
39172	FlexElement 3 Value	---	FlexElement 3 actual value
39174	FlexElement 4 Value	---	FlexElement 4 actual value
39176	FlexElement 5 Value	---	FlexElement 5 actual value
39178	FlexElement 6 Value	---	FlexElement 6 actual value
39180	FlexElement 7 Value	---	FlexElement 7 actual value
39182	FlexElement 8 Value	---	FlexElement 8 actual value
41138	V0 3rd Harmonic 1	Volts	VTFF 1 V0 3rd Harmonic
41140	V0 3rd Harmonic 2	Volts	VTFF 2 V0 3rd Harmonic
41142	V0 3rd Harmonic 3	Volts	VTFF 3 V0 3rd Harmonic
45584	RxGOOSE Analog1	---	RxGOOSE analog input 1
45586	RxGOOSE Analog2	---	RxGOOSE analog input 2
45588	RxGOOSE Analog3	---	RxGOOSE analog input 3
45590	RxGOOSE Analog4	---	RxGOOSE analog input 4
45592	RxGOOSE Analog5	---	RxGOOSE analog input 5
45594	RxGOOSE Analog6	---	RxGOOSE analog input 6
45596	RxGOOSE Analog7	---	RxGOOSE analog input 7
45598	RxGOOSE Analog8	---	RxGOOSE analog input 8
45600	RxGOOSE Analog9	---	RxGOOSE analog input 9

Decimal address	FlexAnalog name	Units	Description
45602	RxGOOSE Analog10	---	RxGOOSE analog input 10
45604	RxGOOSE Analog11	---	RxGOOSE analog input 11
45606	RxGOOSE Analog12	---	RxGOOSE analog input 12
45608	RxGOOSE Analog13	---	RxGOOSE analog input 13
45610	RxGOOSE Analog14	---	RxGOOSE analog input 14
45612	RxGOOSE Analog15	---	RxGOOSE analog input 15
45614	RxGOOSE Analog16	---	RxGOOSE analog input 16
45616	RxGOOSE Analog17	---	RxGOOSE analog input 17
45618	RxGOOSE Analog18	---	RxGOOSE analog input 18
45620	RxGOOSE Analog19	---	RxGOOSE analog input 19
45622	RxGOOSE Analog20	---	RxGOOSE analog input 20
45624	RxGOOSE Analog21	---	RxGOOSE analog input 21
45626	RxGOOSE Analog22	---	RxGOOSE analog input 22
45628	RxGOOSE Analog23	---	RxGOOSE analog input 23
45630	RxGOOSE Analog24	---	RxGOOSE analog input 24
45632	RxGOOSE Analog25	---	RxGOOSE analog input 25
45634	RxGOOSE Analog26	---	RxGOOSE analog input 26
45636	RxGOOSE Analog27	---	RxGOOSE analog input 27
45638	RxGOOSE Analog28	---	RxGOOSE analog input 28
45640	RxGOOSE Analog29	---	RxGOOSE analog input 29
45642	RxGOOSE Analog30	---	RxGOOSE analog input 30
45644	RxGOOSE Analog31	---	RxGOOSE analog input 31
45646	RxGOOSE Analog32	---	RxGOOSE analog input 32
61439	PMU Num Triggers	---	Phasor measurement unit recording number of triggers
63236	HZ Ia RMS	Volts	HIZ Ia RMS current
63238	HZ Ib RMS	Volts	HIZ Ib RMS current
63240	HZ Ic RMS	Volts	HIZ Ic RMS current
63242	HZ In RMS	Volts	HIZ In RMS current
63244	HZ Ia Odd Harmonics	Volts	HIZ Ia odd harmonics
63246	HZ Ib Odd Harmonics	Volts	HIZ Ib odd harmonics
63248	HZ Ic Odd Harmonics	Volts	HIZ Ic odd harmonics
63250	HZ Ig Odd Harmonics	Volts	HIZ Ig odd harmonics
63252	HZ Ia Even Harmonics	Volts	HIZ Ia even harmonics
63254	HZ Ib Even Harmonics	Volts	HIZ Ib even harmonics
63256	HZ Ic Even Harmonics	Volts	HIZ Ic even harmonics
63258	HZ Ig Even Harmonics	Volts	HIZ Ig even harmonics
63260	HZ Ia Non Harmonics	Volts	HIZ Ia non harmonics
63262	HZ Ib Non Harmonics	Volts	HIZ Ib non harmonics
63264	HZ Ic Non Harmonics	Volts	HIZ Ic non harmonics
63266	HZ Ig Non Harmonics	Volts	HIZ Ig non harmonics
63268	HZ Ig Harmonics[1]	Volts	HIZ Ig harmonics 1
63269	HZ Ig Harmonics[2]	Volts	HIZ Ig harmonics 2
63270	HZ Ig Harmonics[3]	Volts	HIZ Ig harmonics 3
63271	HZ Ig Harmonics[4]	Volts	HIZ Ig harmonics 4
63272	HZ Ig Harmonics[5]	Volts	HIZ Ig harmonics 5
63273	HZ Ig Harmonics[6]	Volts	HIZ Ig harmonics 6

A

Decimal address	FlexAnalog name	Units	Description
63274	HZ Ig Harmonics[7]	Volts	HIZ Ig harmonics 7
63275	HZ Ig Harmonics[8]	Volts	HIZ Ig harmonics 8
63276	HZ Ig Harmonics[9]	Volts	HIZ Ig harmonics 9
63277	HZ Ig Harmonics[10]	Volts	HIZ Ig harmonics 10
63278	HZ Ig Harmonics[11]	Volts	HIZ Ig harmonics 11
63279	HZ Ig Harmonics[12]	Volts	HIZ Ig harmonics 12
63280	HZ Ig Harmonics[13]	Volts	HIZ Ig harmonics 13
63281	HZ Ig Harmonics[14]	Volts	HIZ Ig harmonics 14
63282	HZ Ig Harmonics[15]	Volts	HIZ Ig harmonics 15
63283	HZ Ig Harmonics[16]	Volts	HIZ Ig harmonics 16
63284	HZ Ig Harmonics[17]	Volts	HIZ Ig harmonics 17
63285	HZ Ig Harmonics[18]	Volts	HIZ Ig harmonics 18
63286	HZ Ig Harmonics[19]	Volts	HIZ Ig harmonics 19
63287	HZ Ig Harmonics[20]	Volts	HIZ Ig harmonics 20
63288	HZ Ig Harmonics[21]	Volts	HIZ Ig harmonics 21
63289	HZ Ig Harmonics[22]	Volts	HIZ Ig harmonics 22
63290	HZ Ig Harmonics[23]	Volts	HIZ Ig harmonics 23
63291	HZ Ig Harmonics[24]	Volts	HIZ Ig harmonics 24
63292	HZ Ig Harmonics[25]	Volts	HIZ Ig harmonics 25
63293	HZ Ig Harmonics[26]	Volts	HIZ Ig harmonics 26
63294	HZ Ig Harmonics[27]	Volts	HIZ Ig harmonics 27
63295	HZ Ig Harmonics[28]	Volts	HIZ Ig harmonics 28
63296	HZ Ig Harmonics[29]	Volts	HIZ Ig harmonics 29
63297	HZ Ig Harmonics[30]	Volts	HIZ Ig harmonics 30
63298	HZ Ig Harmonics[31]	Volts	HIZ Ig harmonics 31
63299	HZ Ig Harmonics[32]	Volts	HIZ Ig harmonics 32
63300	HZ Ig Harmonics[33]	Volts	HIZ Ig harmonics 33
63301	HZ Ig Harmonics[34]	Volts	HIZ Ig harmonics 34
63302	HZ Ig Harmonics[35]	Volts	HIZ Ig harmonics 35
63303	HZ Ig Harmonics[36]	Volts	HIZ Ig harmonics 36
63304	HZ Ig Harmonics[37]	Volts	HIZ Ig harmonics 37
63305	HZ Ig Harmonics[38]	Volts	HIZ Ig harmonics 38
63306	HZ Ig Harmonics[39]	Volts	HIZ Ig harmonics 39
63307	HZ Ig Harmonics[40]	Volts	HIZ Ig harmonics 40
63308	HZ Ig Harmonics[41]	Volts	HIZ Ig harmonics 41
63309	HZ Ig Harmonics[42]	Volts	HIZ Ig harmonics 42
63310	HZ Ig Harmonics[43]	Volts	HIZ Ig harmonics 43
63311	HZ Ig Harmonics[44]	Volts	HIZ Ig harmonics 44
63312	HZ Ig Harmonics[45]	Volts	HIZ Ig harmonics 45
63313	HZ Ig Harmonics[46]	Volts	HIZ Ig harmonics 46
63314	HZ Ig Harmonics[47]	Volts	HIZ Ig harmonics 47
63315	HZ Ig Harmonics[48]	Volts	HIZ Ig harmonics 48
63316	HZ Ig Harmonics[49]	Volts	HIZ Ig harmonics 49
63317	HZ Ig Harmonics[50]	Volts	HIZ Ig harmonics 50
63318	HZ Ig Harmonics[51]	Volts	HIZ Ig harmonics 51
63319	HZ Ig Harmonics[52]	Volts	HIZ Ig harmonics 52

Decimal address	FlexAnalog name	Units	Description
63320	HZ Ig Harmonics[53]	Volts	HIZ Ig harmonics 53
63321	HZ Ig Harmonics[54]	Volts	HIZ Ig harmonics 54
63322	HZ Ig Harmonics[55]	Volts	HIZ Ig harmonics 55
63323	HZ Ig Harmonics[56]	Volts	HIZ Ig harmonics 56
63324	HZ Ig Harmonics[57]	Volts	HIZ Ig harmonics 57
63325	HZ Ig Harmonics[58]	Volts	HIZ Ig harmonics 58
63326	HZ Ig Harmonics[59]	Volts	HIZ Ig harmonics 59
63327	HZ Ig Harmonics[60]	Volts	HIZ Ig harmonics 60
63328	HZ Ig Harmonics[61]	Volts	HIZ Ig harmonics 61
63329	HZ Ig Harmonics[62]	Volts	HIZ Ig harmonics 62
63330	HZ Ig Harmonics[63]	Volts	HIZ Ig harmonics 63
63331	HZ Ig Harmonics[64]	Volts	HIZ Ig harmonics 64

A

F60 Feeder Protection System

Appendix B: RADIUS server configuration

B.1 RADIUS server configuration

The following procedure is an example of how to set up a simple RADIUS server. You install the RADIUS server software on a separate computer. In this example, we use FreeRADIUS third-party software.

1. Download and install FreeRADIUS from www.freeradius.org as the RADIUS server. This is a Windows 32-bit installation that is known to work. If you try another third-party tool and it does not work, use the FreeRADIUS software from freeradius.net.
2. Open the radiusd.conf file in the <Path_to_Radius>\etc\raddb folder, locate the "bind_address" field, and enter your RADIUS server IP address. An example is

   ```
   bind_address = 10.14.61.122
   ```

   Text editor software that supports direct editing and saving of UNIX text encodings and line breaks, such as EditPad Lite, is needed for this editing.
3. In the users.conf file in the <Path_to_Radius>\etc\raddb folder, add the following text to configure a user "Tester" with an Administrator role.

   ```
   Tester              User-Password == "TesterPw1#"
                       GE-UR-Role = Administrator
   ```
4. In the clients.conf file in the <Path_to_Radius>\etc\raddb folder, add the following text to define the UR as a RADIUS client, where in this example the client IP address is 10.14.61.132, the shared secret specified here is also configured on the UR device for successful authentication, and the shortname is a short, optional alias that can be used in place of the IP address.

   ```
   client 10.14.61.132 {
   secret = Testing!123
   shortname = ur1-test
   }
   ```

   Alternatively, you may specify one secret for a network of clients, where in the example below the clients are all within the 10.14.61.0/24 subnet and the shared secret specified here is also configured on all the UR devices in the subnet for successful authentication.

   ```
   client 10.14.61.0/24 {
   secret = Testing!123
   shortname = net1-test
   }
   ```
5. In the <Path_to_Radius>\etc\raddb folder, create a file called dictionary.ge and add the following content.

B

```
# ############################################################
#  GE VSAs
############################################################

VENDOR                          GE              2910

# Management authorization
BEGIN-VENDOR                    GE

# Role ID
ATTRIBUTE                       GE-UR-Role      1           integer

# GE-UR-ROLE values
VALUE GE-UR-Role                Administrator   1
VALUE GE-UR-Role                Supervisor      2
VALUE GE-UR-Role                Engineer        3
VALUE GE-UR-Role                Operator        4
VALUE GE-UR-Role                Observer        5

END-VENDOR                      GE
############################################################
```

6. In the dictionary file in the <Path_to_Radius>\etc\raddb folder, add the following line.

   ```
   $INCLUDE dictionary.ge
   ```

   For example, the file can look like the following:

   ```
   $INCLUDE ../share/freeradius/dictionary
   $INCLUDE dictionary.ge
   ```

7. For the first start, run the RADIUS server in debug mode to ensure that there are no compiling errors.

   ```
   <Path_to_Radius>/start_radiusd_debug.bat
   ```

8. Set up the RADIUS parameters on the UR as follows.

   8.1. If logging in, select **Device** for the **Authentication Type**, and use Administrator for the **User Name**. The default password is "ChangeMe1#".

   8.2. Access **Settings > Product Setup > Security**. Configure the IP address (10.14.61.122 in this example) and ports (default values in this example) for the RADIUS server. Leave the GE vendor ID field at the default of 2910. Update the RADIUS shared secret (Testing!123 in this example) as specified in the clients.conf file. Restart the relay for the IP address and port changes to take effect.

9. Verify operation. Log in to the UR software as follows. In the login window, select **Server** as the **Authentication Type**, enter the user name entered (for example user name Tester and password "TesterPw1#"). Check that the RADIUS server log file shows the access with an "Access-Accept" entry.

   Recall that if you tried another third-party tool and it did not work, you can use the FreeRADIUS software from freeradius.net.

F60 Feeder Protection System

Appendix C: Command line interface

C.1 Command line interface

SetupCLI is a command line interface to communicate with the EnerVista UR Setup software. Commands can be sent from a DOS prompt or a Windows batch file.

The interface is installed with the EnerVista software. Its default location is similar to C:\Program Files\EnerVista\Tools\SetupCLI

The EnerVista software needs to be installed on a computer to run the command line interface. The command line interface does not provide a remote connection to a computer running the EnerVista software.

Items to note are as follows:

- Works with EnerVista UR Setup version 6.10 and later
- Available in English only
- The graphical user interface of the software is not available concurrently with the command line interface
- It does not support concurrent commands
- It has limited functionality with CyberSentry
- It does not interface with Engineer
- It does not work when EnerVista UR Setup security is enabled, meaning when login is required

Command syntax is as follows:

- Options enclosed in [ ] are optional
- Values enclosed in < > are replaced with your own values
- <Application> is replaced with the EnerVista software to receive the command. Use "URPC" for EnerVista UR Setup.
- <device> is the UR device name, as displayed in the **Device Name** field of the Device Setup window and listed in the Online Window. Use quotes with spaces, such as "B30 Belfort".
- "-s" can be used with any command to suppress error messages
- All commands, their return codes, and error description are logged in the All Users > Application Data folder
- When the Supervisor account is enabled, the 'Lock Relay' setting must first be changed to No before the putsettings, inservice, or reboot command can be used. This setting cannot be changed using the command line interface.
- Use quotes ("") to enclose any parameter containing a space
- Commands, options, and parameters are case sensitive

- All commands have a return code of 0-255. 0 indicates success and 1-255 indicate different errors
- If SetupCLI is automated (in a batch file), make sure that only a single batch is running at a time. SetupCLI does not support concurrent operations.

To run the command line interface:

1. In Windows, click the **Start** button, enter `cmd`, and press the **Enter** key. After prompting for permission, the Windows command window opens.
2. Enter `SetupCLI` followed by the action to execute. An example of use is to enter "SetupCLI -h" to display help, specifically the commands and explanations outlined here.

Figure C-1: Command line interface run in the command window

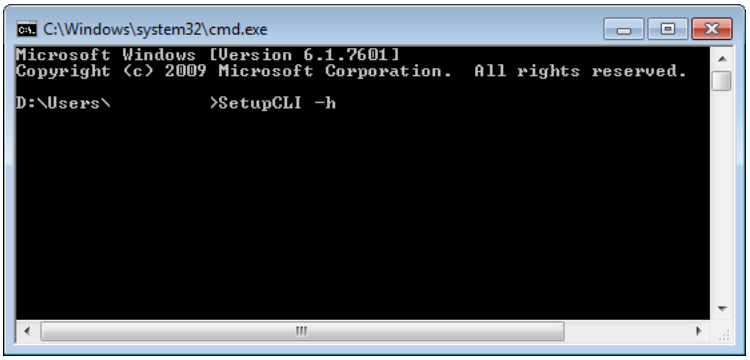

SetupCLI -h

Display help.

It displays the content outline here.

SetupCLI <Application> start [-c] [-s]

Launch application with name <Application>.

To start in client mode, which is the graphical user interface, include option '-c'. Before use, the software must be idle without any windows open. Any activity or open windows can cause unexpected behavior. When in client mode, do not use Launchpad's Site Management feature.

To suppress errors, include option -s.

Example: SetupCLI URPC start -c

SetupCLI <Application> exit [-s]

Exit application with name <Application>.

Example: SetupCLI URPC exit

SetupCLI <Application> login -d <device> [-A <authentication type>] [-a <account>] -w <password> [-s]

Authenticate with device <device> using password <password>.

For non-CyberSentry devices — Set <authentication type> to "traditional". Note that <authentication type> defaults to "traditional" if not specified. Set <account> to "COMMANDS" or "SETTINGS". If not specified, the SETTINGS account is used.

Example: SetupCLI URPC login -d "C30 Melbourne" -A traditional -a SETTINGS -w 1password1

Example of a batch file that checks for an error (this batch file uses standard batch file operations to check the return code (ERRORLEVEL) and jump to an error handler):

SetupCLI URPC start

```
SetupCLI URPC login -d demoDevice -a SETTINGS -w WrongPassword -A traditional
IF NOT ERRORLEVEL 0 GOTO FAILED
SetupCLI URPC putsettings -d demoDevice  -f "example file.urs"
SetupCLI URPC inservice -d demoDevice
SetupCLI URPC reboot -d demoDevice
SetupCLI URPC exit
exit

:FAILED
echo Please try again
exit
```

For CyberSentry devices with local authentication — Set <authentication type> to "local" . Set <account> to "Supervisor", "Administrator", "Engineer", "Operator", or "Observer".

For CyberArmor devices with RADIUS authentication — Set <authentication type> to "radius". Set <account> to the user's account on the radius server.

SetupCLI <Application> logout -d <device> [-s]

Log out of device <device>.

Example: SetupCLI URPC logout -d C30

SetupCLI <Application> getsettings -d <device> -f <File> [-s]

Read settings from device <device> and save them to the .urs file <File>. The <File> must not already exist. The default path to the output file is C:\Users\Public\Public Documents\GE Power Management\URPC\Data

Example: SetupCLI URPC getsettings -d C30 -f "C30 Markham.urs"

Example of a batch file to retrieve a settings file:

```
SetupCLI URPC start
SetupCLI URPC getsettings -d demoDevice -f C:\example.urs
SetupCLI URPC exit
```

Example of a batch file to retrieve a settings file from a relay that requires RADIUS authentication:

```
SetupCLI URPC start
SetupCLI URPC login -d demoDevice -a %1 -w %2 -A radius
SetupCLI URPC getsettings -d demoDevice -f "example file.urs"
SetupCLI URPC logout -d demoDevice
SetupCLI URPC exit
```

Although a user name and password could have been entered in this batch file, it would have created a security risk. Batch files allow you to pass in runtime parameters and refer to them in your script as %1, %2, and so on. For example, if this file is called example.bat, one calls it as follows: "example.bat MyUserName MyPassword"

SetupCLI <Application> putsettings -d <device> -f <File> [-s]

Write the settings file <File> to the device <device>.

For CyberSentry devices, putsettings is only supported for users with the "Administrator" role.

Example: SetupCLI URPC putsettings -d C30 -f "C30 Markham.urs"

SetupCLI <Application> compare -f <File1> -r <File2> -o <OutputFile> [-s]

Compare settings files <File1> and <File2>, and save output to <OutputFile>.

Example: SetupCLI URPC compare -f may.urs -r september.urs -o compared.txt

Batch file example that retrieves a settings file, compares it with an existing settings file, and opens the resulting comparison file:

```
SetupCLI URPC start
SetupCLI URPC getsettings -d demoDevice  -f devicefile.urs
SetupCLI URPC compare -f existingfile.urs -r devicefile.urs -o output.txt
```

The output is similar to the following:

```
Comparing settings file aaa.urs : C:\Users\Public\Public Documents\GE Power Management\URPC\Data\ with bbb.urs
: C:\Users\Public\Public Documents\GE Power Management\URPC\Data\

#    Setting Name              (Group,Module,Item)   Value

1 + Default Message Timeout          (1,1,1) = 299 s
2 - Default Message Timeout          (1,1,1) = 300 s
3 + Flash Message Time               (1,1,1) = 0.9 s
4 - Flash Message Time               (1,1,1) = 1.0 s
```

SetupCLI <Application> inservice -d <device> [-n] [-s]

Put the device in service. Include option -n to take the device out of service.

Example: SetupCLI URPC inservice -d C30

SetupCLI <Application> reboot -d <device> [-s]

Reboot the relay <device>. This is necessary after changing IEC 61850 settings and aggregator source settings.

Example: SetupCLI URPC reboot -d "C30_Instanbul"

SetupCLI <Application> adddevice -I <IP Address> -S <Slave Address> -P <Modbus Port>

Connect to a device using its IP address, slave address, and Modbus port. Show the device in the EnerVista interface under the SetupCLI Site as DEV@SETUP_CLI.

EnerVista UR Setup 7.30 or higher supports this command.

Figure C-2: Device added using IP address

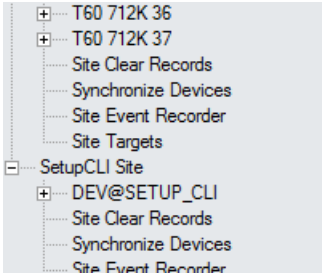

The device is named as DEV@SETUP_CLI, which is used as the device name required by the <device> parameter of other SetupCLI commands.

The device name DEV@SETUP_CLI is always assigned to the device that is connected most recently by performing 'adddevice' command. It means that the Application only keeps up to one device named as DEV@SETUP_CLI, the 'adddevice' command disconnects/deletes the device DEV@SETUP _CLI that was connected previously by performing 'adddevice' command.

The device name DEV@SETUP_CLI is never used to configure/connect to a device through the graphical user interface.

Example of a batch file using a device IP address to retrieve its settings file:

```
SetupCLI URPC start
SetupCLI URPC adddevice -I 192.168.140.113 -S 113 -P 502
SetupCLI URPC getsettings -d DEV@SETUP_CLI -f C:\example.urs
SetupCLI URPC exit
```

After connecting the device using IP address, the device name DEV@SETUP_CLI is used to identify this device in 'getsettings' command.

Example of a batch file using a device IP address to retrieve a settings file when RADIUS authentication is required:

```
SetupCLI URPC start
SetupCLI URPC adddevice -I 192.168.140.113 -S 113 -P 502
SetupCLI URPC login -d DEV@SETUP_CLI -a %1 -w %2 -A radius
SetupCLI URPC getsettings -d DEV@SETUP_CLI -f "example file.urs"
SetupCLI URPC logout -d DEV@SETUP_CLI
SetupCLI URPC exit
```

DEV@SETUP_CLI has to be used as the device name in the commands followed by the 'adddevice' command.

C

F60 Feeder Protection System

Appendix D: Miscellaneous

This chapter provides the warranty and revision history.

D.1 Warranty

For products shipped as of 1 October 2013, GE Grid Solutions warrants most of its GE manufactured products for 10 years. For warranty details including any limitations and disclaimers, see the Terms and Conditions at

https://www.gegridsolutions.com/multilin/warranty.htm

For products shipped before 1 October 2013, the standard 24-month warranty applies.

D.2 Revision history

The tables outline the releases and revision history of this document.

Table D-1: Revision history (English)

Manual P/N	F60 revision	Release date	ECO
1601-0093-A1	1.5x	23 March 1999	N/A
1601-0093-A2	1.6x	10 August 1999	URF-012
1601-0093-A3	1.8x	29 October 1999	URF-014
1601-0093-A4	1.8x	15 November 1999	URF-015
1601-0093-A5	2.0x	17 December 1999	URF-016
1601-0093-A6	2.2x	12 May 2000	URF-017
1601-0093-A7	2.2x	14 June 2000	URF-020
1601-0093-A7a	2.2x	28 June 2000	URF-020a
1601-0093-B1	2.4x	08 September 2000	URF-022
1601-0093-B2	2.4x	03 November 2000	URF-024
1601-0093-B3	2.6x	09 March 2001	URF-025
1601-0093-B4	2.8x	28 September 2001	URF-027
1601-0093-B5	2.9x	03 December 2001	URF-030
1601-0093-B6	2.6x	27 February 2004	URX-120
1601-0093-C1	3.0x	02 July 2002	URF-032

Manual P/N	F60 revision	Release date	ECO
1601-0093-C2	3.1x	30 August 2002	URF-034
1601-0093-C3	3.0x	18 November 2002	URF-036
1601-0093-C4	3.1x	18 November 2002	URF-038
1601-0093-C5	3.0x	11 February 2003	URF-040
1601-0093-C6	3.1x	11 February 2003	URF-042
1601-0093-D1	3.2x	11 February 2003	URF-044
1601-0093-D2	3.2x	02 June 2003	URX-084
1601-0093-E1	3.3x	01 May 2003	URX-080
1601-0093-E2	3.3x	29 May 2003	URX-083
1601-0093-F1	3.4x	10 December 2003	URX-111
1601-0093-F2	3.4x	09 February 2004	URX-115
1601-0093-G1	4.0x	23 March 2004	URX-123
1601-0093-G2	4.0x	17 May 2004	URX-136
1601-0093-H1	4.2x	30 June 2004	URX-145
1601-0093-H2	4.2x	23 July 2004	URX-151
1601-0093-J1	4.4x	15 September 2004	URX-156
1601-0093-K1	4.6x	15 February 2005	URX-176
1601-0093-L1	4.8x	05 August 2005	URX-202
1601-0093-M1	4.9x	15 December 2005	URX-208
1601-0093-M2	4.9x	27 February 2006	URX-214
1601-0093-N1	5.0x	31 March 2006	URX-217
1601-0093-N2	5.0x	26 May 2006	URX-220
1601-0093-P1	5.2x	23 October 2006	URX-230
1601-0093-P2	5.2x	24 January 2007	URX-232
1601-0093-R1	5.4x	26 June 2007	URX-242
1601-0093-R2	5.4x	31 August 2007	URX-246
1601-0093-R3	5.4x	17 October 2007	URX-251
1601-0093-S1	5.5x	7 December 2007	URX-253
1601-0093-S2	5.5x	22 February 2008	URX-258
1601-0093-S3	5.5x	12 March 2008	URX-260
1601-0093-T1	5.6x	27 June 2008	08-0390
1601-0093-U1	5.7x	29 May 2009	09-0938
1601-0093-U2	5.7x	30 September 2009	09-1165
1601-0093-V1	5.8x	29 May 2010	09-1457
1601-0093-V2	5.8x	04 January 2011	11-2237
1601-0093-W1	5.9x	12 January 2011	11-2227
1601-0093-X1	6.0x	21 December 2011	11-2840
1601-0093-X2	6.0x	5 April 2012	12-3254
1601-0093-Y1	7.0x	30 September 2012	12-3529
1601-0093-Y2	7.0x	11 November 2012	12-3601
1601-0093-Z1	7.1x	30 March 2013	13-0126
1601-0093-AA1	7.2x	1 August 2013	13-0401
1601-0093-AB1	7.3x	7 November 2014	14-1408
1601-0093-AB2	7.3x	1 September 2015	15-2215
1601-0093-AB3	7.3x	1 March 2021	21-6255

Table D-2: Major changes for F60 manual version AB3 (English)

Page	Description
---	Updated document throughout, including branding from GE Digital Energy to GE Grid Solutions
---	Deleted EAC logo from title page and deleted EAC certification from Approvals specifications because document not translated into Russian
---	Added 8L compatibility with 8Z module to Order Codes and Replacement Modules sections
2-	Updated Dropout Level specification for several elements, changing percent range to a number
2-	Deleted end-of-manufacturing modules 2G, 74, 75, 7E, 7L from order code tables
2-7	Updated order codes from SH / SL to RH / RL for the redundant power supply for horizontal units. The power supply modules were upgraded in 2014 to SH and SL, but the order codes when purchasing a UR remain as RH and RL so that customers do not need to change order codes. The order codes for the power supply replacement modules are correct as SH and SL.
2-7	Added order codes for Inter-relay communication modules in U column for horizontal unit
3-	Updated Typical Wiring Diagram at CPU module, CPU Module Communications Wiring figure, and Options for IRIG-B Connection figure
3-14	Updated Figure 3-12 Typical Wiring Diagram with High-Impedance Detection, removing Power Supply Critical Failure connection to ground
3-37	Updated RS422 and Fiber Interface Connection figure for the clock channels (from 7a and 7b to 1a and 1b)
B-	Updated RADIUS chapter
C-	Added Command Line Interface appendix

Table D-3: Major changes for F60 manual version AB2 (English)

Page	Description
---	Updated document throughout, including numbers of elements and FlexLogic operands table
---	Added EAC compliance information throughout, including logo on title page, rear panel, added specifications, added life expectancy and decommissioning, added sections on Repairs, Storage, and Disposal
---	Updated several figures for consistency
2-17	Added UR Signal Processing section
5-	Updated IEC 61850 content
A-	Updated FlexAnalog table

Table D-4: Major changes for F60 manual version AB1 (English)

Page	Description
---	Updated document throughout and put into new template. Major revision.
---	Added 87G restricted ground fault functionality throughout document, including feature table, specifications, settings, FlexLogic table, and Modbus memory map. Not added to single line diagram.
---	Updated references to digital inputs/outputs to contact inputs/outputs for consistency
---	Added content for advanced IEC 61850, for example in the Settings and Actual Values chapters
2-	Updated Order Codes and Specifications
5-28	Added RS232 Baud Rate setting to Serial Ports section. Baud rate is now configurable, with two options.
5-32	Added Far-End Fault Indication (FEFI) section
9-2	Added Software Upgrade section to the Maintenance chapter
---	Moved communications appendices B through F to new UR Series Communications Guide for UR 7.3x AB1
C-1	Updated product warranty from 24 months to 10 years

D

F60 Feeder Protection System

Abbreviations

A	Ampere
AC	Alternating Current
A/D	Analog to Digital
AE	Accidental Energization, Application Entity
AMP	Ampere
ANG	Angle
ANSI	American National Standards Institute
AR	Automatic Reclosure
ASDU	Application-layer Service Data Unit
ASYM	Asymmetry
AUTO	Automatic
AUX	Auxiliary
AVG	Average
AWG	American Wire Gauge
BCS	Best Clock Selector
BER	Bit Error Rate
BF	Breaker Fail
BFI	Breaker Failure Initiate
BKR	Breaker
BLK	Block
BLKG	Blocking
BNC	Bayonet Neill-Concelman
BPNT	Breakpoint of a characteristic
BRKR	Breaker
CAP	Capacitor
CC	Coupling Capacitor
CCVT	Coupling Capacitor Voltage Transformer
CFG	Configure / Configurable
.CFG	Filename extension for oscillography files
CHK	Check
CHNL	Channel
CID	Configured IED Description
CLS	Close
CLSD	Closed
CMND	Command
CMPRSN	Comparison
CO	Contact Output
COM	Communication
COMM	Communications
COMP	Compensated, Comparison
CONN	Connection
CONT	Continuous, Contact
CO-ORD	Coordination
CPU	Central Processing Unit
CRC	Cyclic Redundancy Code/Check
CRT, CRNT	Current
CSA	Canadian Standards Association
CT	Current Transformer
CVT	Capacitive Voltage Transformer
D/A	Digital to Analog
DC (dc)	Direct Current
DCE	Data Communications Equipment
DCS	Distributed Control System
DD	Disturbance Detector
DFLT	Default
DGNST	Diagnostics
DIFF	Differential
DIR	Directional
DISCREP	Discrepancy
DIST	Distance
DMD	Demand
DNP	Distributed Network Protocol
DPO	Dropout
DPS	Double-Point Status
DSP	Digital Signal Processor
DST	Daylight Savings Time
dt	Rate of Change
DTT	Direct Transfer Trip
DUTT	Direct Under-reaching Transfer Trip
EGD	Ethernet Global Data
ENCRMNT	Encroachment
EPRI	Electric Power Research Institute
.EVT	Filename extension for event recorder files
EXT	Extension, External
F	Field
FAIL	Failure
FD	Fault Detector
FDH	Fault Detector high-set
FDL	Fault Detector low-set
FLA	Full Load Current
FO	Fiber Optic
FREQ	Frequency
FSK	Frequency-Shift Keying
FTP	File Transfer Protocol
FxE	FlexElement™
FWD	Forward
G	Generator
GE	General Electric
GND	Ground

GNTR	Generator
GOOSE	General Object Oriented Substation Event
GPS	Global Positioning System
GSU	Generator Step-Up
HARM	Harmonic / Harmonics
HCT	High Current Time
HGF	High-Impedance Ground Fault (CT)
HIZ	High-Impedance and Arcing Ground
HMI	Human-Machine Interface
HTTP	Hyper Text Transfer Protocol
HV	High Voltage
HYB	Hybrid
Hz	Hertz
I	Instantaneous
I_0	Zero Sequence current
I_1	Positive Sequence current
I_2	Negative Sequence current
IA	Phase A current
IAB	Phase A minus B current
IB	Phase B current
IBC	Phase B minus C current
IC	Phase C current
ICA	Phase C minus A current
ID	Identification
IED	Intelligent Electronic Device
IEC	International Electrotechnical Commission
IEEE	Institute of Electrical and Electronic Engineers
IG	Ground (not residual) current
Igd	Differential Ground current
IN	CT Residual Current (3I0) or Input
INC SEQ	Incomplete Sequence
INIT	Initiate
INST	Instantaneous
INV	Inverse
I/O	Input/Output
IOC	Instantaneous Overcurrent
IOV	Instantaneous Overvoltage
IRIG	Inter-Range Instrumentation Group
ISO	International Standards Organization
IUV	Instantaneous Undervoltage
K0	Zero Sequence Current Compensation
kA	kiloAmpere
kV	kiloVolt
LED	Light Emitting Diode
LEO	Line End Open
LFT BLD	Left Blinder
LOOP	Loopback
LPU	Line Pickup
LRA	Locked-Rotor Current
LTC	Load Tap-Changer
LV	Low Voltage
M	Machine
mA	MilliAmpere
MAG	Magnitude
MAN	Manual / Manually
MAX	Maximum
MIC	Model Implementation Conformance
MIN	Minimum, Minutes
MMI	Man Machine Interface
MMS	Manufacturing Message Specification
MRT	Minimum Response Time
MSG	Message
MTA	Maximum Torque Angle
MTR	Motor
MVA	MegaVolt-Ampere (total 3-phase)
MVA_A	MegaVolt-Ampere (phase A)
MVA_B	MegaVolt-Ampere (phase B)
MVA_C	MegaVolt-Ampere (phase C)
MVAR	MegaVar (total 3-phase)
MVAR_A	MegaVar (phase A)
MVAR_B	MegaVar (phase B)
MVAR_C	MegaVar (phase C)
MVARH	MegaVar-Hour
MW	MegaWatt (total 3-phase)
MW_A	MegaWatt (phase A)
MW_B	MegaWatt (phase B)
MW_C	MegaWatt (phase C)
MWH	MegaWatt-Hour
N	Neutral
N/A, n/a	Not Applicable
NEG	Negative
NMPLT	Nameplate
NOM	Nominal
NTR	Neutral
O	Over
OC, O/C	Overcurrent
O/P, Op	Output
OP	Operate
OPER	Operate
OPERATG	Operating
O/S	Operating System
OSI	Open Systems Interconnect
OSB	Out-of-Step Blocking
OUT	Output
OV	Overvoltage
OVERFREQ	Overfrequency
OVLD	Overload
P	Phase
PC	Phase Comparison, Personal Computer
PCNT	Percent
PF	Power Factor (total 3-phase)
PF_A	Power Factor (phase A)
PF_B	Power Factor (phase B)
PF_C	Power Factor (phase C)
PFLL	Phase and Frequency Lock Loop
PHS	Phase
PICS	Protocol Implementation & Conformance Statement
PKP	Pickup
PLC	Power Line Carrier
POS	Positive
POTT	Permissive Over-reaching Transfer Trip
PP	Power Profile
PRESS	Pressure
PRI	Primary
PRP	Parallel Redundancy Protocol
PROT	Protection
PSEL	Presentation Selector
pu	Per Unit
PUIB	Pickup Current Block
PUIT	Pickup Current Trip
PUSHBTN	Pushbutton
PUTT	Permissive Under-reaching Transfer Trip
PWM	Pulse Width Modulated
PWR	Power
QUAD	Quadrilateral
R	Rate, Reverse
RCA	Reach Characteristic Angle
REF	Reference
REM	Remote
REV	Reverse
RI	Reclose Initiate
RIP	Reclose In Progress
RGT BLD	Right Blinder

RMA	Return Materials Authorization
RMS	Root Mean Square
ROCOF	Rate of Change of Frequency
ROD	Remote Open Detector
RST	Reset
RSTR	Restrained
RTD	Resistance Temperature Detector
RTU	Remote Terminal Unit
RX (Rx)	Receive, Receiver
s	second
S	Sensitive
SA	Security Association
SAT	CT Saturation
SBO	Select Before Operate
SCADA	Supervisory Control and Data Acquisition
SCC	Serial Communication Controller
SCL	Substation Configuration Language
SEC	Secondary
SEL	Select / Selector / Selection
SENS	Sensitive
SEQ	Sequence
SFTP	Secure Shell (SSH) File Transfer Protocol, Secure File Transfer Protocol
SIR	Source Impedance Ratio
SNTP	Simple Network Time Protocol
SRC	Source
SSB	Single Side Band
SSEL	Session Selector
STATS	Statistics
SUPN	Supervision
SUPV	Supervise / Supervision
SV	Supervision, Service
SYNC	Synchrocheck
SYNCHCHK	Synchrocheck
T	Time, transformer
TC	Thermal Capacity
TCP	Transmission Control Protocol
TCU	Thermal Capacity Used
TD MULT	Time Dial Multiplier
TEMP	Temperature
TFTP	Trivial File Transfer Protocol
THD	Total Harmonic Distortion
TMR	Timer
TOC	Time Overcurrent
TOV	Time Overvoltage
TRANS	Transient
TRANSF	Transfer
TSEL	Transport Selector
TUC	Time Undercurrent
TUV	Time Undervoltage
TX (Tx)	Transmit, Transmitter
U	Under
UC	Undercurrent
UCA	Utility Communications Architecture
UDP	User Datagram Protocol
UL	Underwriters Laboratories
UNBAL	Unbalance
UR	Universal Relay
URC	Universal Recloser Control
.URS	Filename extension for settings files
UV	Undervoltage
V/Hz	Volts per hertz
V_0	Zero Sequence voltage
V_1	Positive Sequence voltage
V_2	Negative Sequence voltage
VA	Phase A voltage
VAB	Phase A to B voltage
VAG	Phase A to Ground voltage
VARH	Var-hour voltage
VB	Phase B voltage
VBA	Phase B to A voltage
VBG	Phase B to Ground voltage
VC	Phase C voltage
VCA	Phase C to A voltage
VCG	Phase C to Ground voltage
VF	Variable Frequency
VIBR	Vibration
VT	Voltage Transformer
VTFF	Voltage Transformer Fuse Failure
VTLOS	Voltage Transformer Loss Of Signal
WDG	Winding
WH	Watt-hour
w/ opt	With Option
WGS	World Geodetic System
WRT	With Respect To
X	Reactance
XDUCER	Transducer
XFMR	Transformer
Z	Impedance, Zone

F60 Feeder Protection System

Index

Numerics

10BASE-F settings 5-32

A

AC current input specifications 2-28
AC current inputs 5-117
AC inputs 3-17
AC voltage input specifications 2-28
Access Violation message 3-61
Activate relay 3-53
Active setting group 5-181
Actual values 6-1
Add relay 3-57
Administrator
  add user account 5-14
  command to force logoff 7-6
  no automatic logout from front panel 5-20
  role for CyberSentry 2-4
Aggregator
  actual values 6-25
  settings 5-154
Aggregator error message 7-11
Alarm LEDs 5-97
ANSI device numbers 2-2
Apparent power 6-18
  specifications 2-27
Application examples
  breaker trip circuit integrity 5-268
  contact inputs 5-300
  direct inputs and outputs 5-306
  latching outputs 5-303
  sensitive directional power 5-240
Approvals 2-37
Arc Burst Pattern Analysis algorithm for Hi-Z 9-4
Architecture, relay 5-158
Arcing current 5-277
Arcing Suspected algorithm for Hi-Z 9-4
Attempt to contact RADIUS server failed message 7-13
Audit list of port numbers 5-32
Authentication by device or server 5-16
Authentication fail message 7-12
Automatic discovery of UR devices 3-60
Autoreclose
  actual values 6-6
  FlexLogic operands 5-160
  logic diagram 5-263
  settings 5-259
  single shot sequence 5-265
Auxiliary overvoltage
  FlexLogic operands 5-160
  logic 5-239
  settings 5-238
  specifications 2-22
Auxiliary undervoltage
  FlexLogic operands 5-160
  logic diagram 5-238
  settings 5-237
  specifications 2-21
Auxiliary voltage channel 3-17
Auxiliary voltage metering 6-18
AWG wire size 3-16, 3-40, 3-44, 3-46, 3-47

B

Back up settings 5-45, 10-2
Banks 5-7, 5-117, 5-118
Battery
  disposal 10-10
  failure message 7-9
  replace 10-7

Baud rate 5-29
BLOCK setting 5-5
Breaker arcing current
  actual values 6-28
  clearing 5-27, 7-2
  FlexLogic operands 5-161
  logic diagram 5-280
  measurement 5-279
  settings 5-277
  specifications 2-23
Breaker control
  control of two breakers 4-26
  dual breaker logic 5-125
  FlexLogic operands 5-161
  settings 5-122
Breaker failure
  description 5-224
  determination 5-225
  FlexLogic operands 5-161
  logic diagram 5-228, 5-229
  main path sequence 5-225
  settings 5-223, 5-226
  specifications 2-23
Breaker flashover
  FlexLogic operands 5-161
  logic diagram 5-285
  settings 5-281
  specifications 2-23
Breaker restrike
  FlexLogic operands 5-161
  logic diagram 5-288
  settings 5-286
Breaker-and-a-half scheme 5-6
Brightness 5-26
Broken conductor
  FlexLogic operands 5-162
  settings 5-292

C

C37.94 communications 3-48, 3-51
CE certification 2-37
Certification 2-37
Changes D-1
Channel
  banks 5-117, 5-118
  tests 6-10
CID files 5-45
Circuit monitoring applications 5-267
Cleaning 2-37
Clear
  files and records 10-13
  LEDs 5-305
  relay records using settings 5-27
  security logs 7-6
Clock
  actual values 6-7
  IRIG-B 3-35
  PTP 5-84
  set on front panel 7-3
  settings 5-83
Close
  HTTP port 5-74
  IEC 60870-5-104 port 5-76
  Modbus port 5-38
  SNTP port 5-87
  TFTP port 5-75
  Web access 5-74
  Web access port 5-74
Cold load pickup
  explained 5-297
  Flexlogic operands 5-162
  logic diagram 5-298
  settings 5-297
Comm status remaining connections 6-10
Command line interface to software C-1
Command password 4-27, 5-10
Commands
  control user accounts 5-14
  menu 7-1
Commissioning 8-1
Communications
  10BASE-F 5-32
  connecting to the UR 3-59, 3-61
  DNP 5-38
  EGD 5-77
  HTTP 5-74
  IEC 60870-5-10 5-78
  IEC 60870-5-104 5-75
  inter-relay specifications 2-34
  Modbus registers 5-83
  Modbus settings 5-37
  RS232 ..... 3-33, 5-29
  RS485 ..... 3-34, 5-29
  settings 5-32, 5-38
  specifications 2-32, 2-34
  web server 5-74
Compliance 2-37
Conducted RFI specifications 2-36
Contact inputs
  actual values 6-3
  FlexLogic operands 5-167
  settings 5-298
  specifications 2-28
  thresholds 5-298
  wet and dry connections 3-26
Contact outputs
  actual values 6-5
  explained 5-301
  FlexLogic operands 5-167
  settings 5-301
Control elements 5-242

Control power
description ... 3-15
specifications ... 2-32
Control pushbuttons
FlexLogic operands ... 5-160
logic diagram ... 5-100
settings ... 5-99
specifications ... 2-25
Counters
actual values ... 6-6
settings ... 5-269
CRC alarm ... 5-114
Critical failure relay specifications ... 2-31
CSA certification ... 2-37
CT bank settings ... 5-117
CT inputs ... 3-16, 5-7, 5-117
CT wiring ... 3-17
Current bank ... 5-117
Current demand ... 5-93
Current harmonics specifications ... 2-27
Current metering actual values ... 6-16
Curves
definite time ... 5-189, 5-232
FlexCurves ... 5-130, 5-189
IAC ... 5-187
IEC ... 5-186
IEEE ... 5-185
inverse time undervoltage ... 5-232
types ... 5-184
Cutout, panel ... 3-2, 3-6
CyberSentry
FlexLogic operands ... 5-160
installation ... 3-68, 5-23
RS485 port limitation ... 5-17
security commands ... 7-6
security overview ... 2-4
system logs ... 5-24

D

Data logger
actual values ... 6-28
clearing ... 5-27, 7-2
settings ... 5-92
specifications ... 2-26
Data, reading values ... 6-1
Date, set ... 7-3
DCmA inputs ... 6-25
actual values ... 6-25
settings ... 5-311
specifications ... 2-29
DCmA outputs
description ... 3-31
settings ... 5-313
specifications ... 2-32
Decommission ... 10-13
Default password ... 5-14
Default settings ... 10-2
Definite time curve ... 5-189, 5-232
Delete files and records ... 5-27, 10-13
Demand metering
actual values ... 6-19
specifications ... 2-28
Demand records, clearing ... 5-27, 7-2
Demand, current ... 5-93
Deploy ... 8-1
Device authentication ... 5-16
Device setup ... 3-60
Dielectric strength ... 3-14
Digital counters
actual values ... 6-6
FlexLogic operands ... 5-162
logic diagram ... 5-271
settings ... 5-269
Digital elements
application example ... 5-268
FlexLogic operands ... 5-162
logic diagram ... 5-267
settings ... 5-266
Digital outputs
see Contact outputs
Dimensions ... 3-2, 3-6
Direct devices
settings ... 5-305
status ... 6-9
Direct I/O
application example ... 5-306
configuration examples ... 5-110
settings ... 5-305
Direct inputs
actual values ... 6-8
application example ... 5-306
clearing counters ... 7-2
error messages ... 7-9
FlexLogic operands ... 5-167
settings ... 5-305
specifications ... 2-29
Direct outputs
application example ... 5-306
clearing counters ... 7-2
error messages ... 7-9
settings ... 5-306
Directional overcurrent
see Phase, Ground, and Neutral directional
Directional polarization ... 5-192
Directional power, sensitive actual values ... 6-22
Directional power, sensitive specifications ... 2-21
Disconnect switch
FlexLogic operands ... 5-166
logic ... 5-129
settings ... 5-127
Discover button ... 3-60
Display settings ... 5-25
Disposal ... 10-14

Dispose of battery 10-10
Disturbance detector
  FlexLogic operands 5-166
  internal 5-121
DNP
  connections remaining 6-10
  settings 5-38
Downed conductor 2-27, 6-8, 9-1
Drag and drop files 4-3

E

EGD protocol
  actual values 6-9
  settings 5-77
Electrostatic discharge specifications 2-36
Elements 5-4
End of life 10-14
Energy algorithm for Hi-Z 9-2
Energy metering
  actual values 6-19
  clearing 5-27, 7-2
  specifications 2-27
Energy metering, clearing 5-27, 7-2
EnerVista UR setup
  command line interface C-1
  drag and drop files 4-3
  event recorder 4-2
  firmware upgrades 10-4
  installation 3-56
  oscillography 4-2
  requirements 3-55
  restart relay 5-45
Engineer
  command to force user logoff 7-6
Enhanced front panel
  Rev. 1 and 2 explained 3-2
Equations
  definite time curve 5-189, 5-232
  FlexCurves 5-189
  FlexLogic 5-176
  FlexLogic, protect 4-9
  IAC curves 5-187
  IEC curves 5-186
  IEEE curves 5-185
Equipment mismatch error 7-8
Error messages 7-7
  device not recognized 10-5
Ethernet
  actual values 6-7
  configuration 3-59
  Quick Connect 3-63
  settings 5-32
Ethernet Global Data settings 5-77
Event cause indicators 4-18
Event Cause LEDs 4-20
Event recorder
  actual values 6-26
  clearing 5-27, 7-2
  records explained 4-2
  specifications 2-26
  via EnerVista software 4-2
Events
  syslog 5-25
EVENTS setting 5-5
Expert Arc Detector algorithm for Hi-Z 9-2
Export settings to file 10-2

F

F485 3-55
Faceplate 3-2, 4-16
Factory default reset 5-8, 5-21
Far-End Fault Indication 5-33
Fast form-C relay specifications 2-31
Fast transient testing specifications 2-36
Fault locator
  logic diagram 9-7
  operation 9-4
Fault locator specifications 2-26
Fault report
  actual values 6-26
  clearing 5-27, 7-2
  settings 5-88
Features 2-1
Fiber signal loss detection 5-33
File transfer by IEC 61850 5-74
File transfer by TFTP 5-75
Files
  delete 10-13
  drag and drop 4-3
  protect FlexLogic with password 4-9
  protect with password 4-6
  transfer to relay 4-1
Firmware lock self-test 7-12
Firmware revision 6-30
Firmware upgrades 10-4
Firmware version does not match EnerVista 10-5
Flash memory 10-13
Flash memory data storage 3-16
Flash messages 5-26
Flex State parameters
  actual values 6-7
  settings 5-105
  specifications 2-25
FlexAnalog parameters A-1
FlexCurves
  equation 5-189
  settings 5-130
  specifications 2-24
  table 5-130

FlexElements
actual values ... 6-23
direction ... 5-178
FlexLogic operands ... 5-162
hysteresis ... 5-178
logic diagram ... 5-177
pickup ... 5-178
settings ... 5-176
specifications ... 2-25
FlexLogic
edit with equation editor ... 5-176
equation editor ... 5-176
equation example ... 5-245
error messages ... 7-8
evaluation ... 5-170
example ... 5-171
gate characteristics ... 5-169
lock equations ... 4-9
lock equations to serial number ... 4-10
operands ... 5-160
operators ... 5-169
rules ... 5-170
security ... 4-9
specifications ... 2-24
timer settings ... 5-176
worksheet ... 5-173
Force contact inputs ... 5-318
Force contact outputs ... 5-318
Form-A relay
actual values ... 6-5
high-impedance circuits ... 3-21
outputs ... 3-20
specifications ... 2-31
Form-C
actual values ... 6-5
critical failure relay ... 3-15
order codes ... 2-7
outputs ... 3-20
replacement modules ... 2-14
specifications ... 2-31
Frequency metering
actual values ... 6-20
specifications ... 2-28
Frequency rate of change
actual values ... 6-23
FlexLogic operands ... 5-162
logic diagram ... 5-256
settings ... 5-254
specifications ... 2-22
Frequency testing ... 8-1
Frequency tracking ... 6-23
Frequency, nominal ... 5-119
Front panel
clear ... 5-305
custom labels ... 4-21
interface ... 4-13
LEDs ... 4-18
password change ... 4-27
use ... 4-13
variations ... 4-16
FUNCTION setting ... 5-5
Fuse failure ... 5-290
Fuse specifications ... 2-30
Fuses not field-replaceable ... 10-13

G

G.703 ... 3-40
wire size ... 3-40
Gateway address ... 5-35
GE type IAC curves ... 5-187
Getting help ... 1-2
GOOSE
actual values ... 6-24
error messages ... 7-11
routable, explained ... 5-48
settings ... 5-48
Ground current metering ... 6-17
Ground IOC
FlexLogic operands ... 5-162
logic diagram ... 5-210
settings ... 5-209
Ground TOC
FlexLogic operands ... 5-162
logic diagram ... 5-209
settings ... 5-208
specifications ... 2-19
Group 1 switch after powerup ... 5-182
Grouped elements ... 5-181
Guarantee ... D-1

H

HardFiber
interface module described ... 3-19
order codes for compatible URs ... 2-7
self-test errors ... 7-13
Harmonic content ... 6-21
Harmonics
actual values ... 6-21
specifications ... 2-28
Heartbeat messages ... 5-49, 5-50, 5-52
Help, getting ... 1-2

Hi-Z
actual values ... 6-8, 6-29
Arc Burst Pattern Analysis ... 9-4
Arcing Suspected algorithm ... 9-4
CT/VT module ... 3-18
data collection ... 5-273
Energy algorithm ... 9-2
Even Harmonic Restraint algorithm ... 9-4
Expert Arc Detector algorithm ... 9-2
explained ... 9-1
Load Analysis algorithm ... 9-3
Load Event Detector algorithm ... 9-3
Load Extraction algorithm ... 9-3
logic diagram ... 5-277
Randomness algorithm ... 9-2
settings ... 5-272
specifications ... 2-27
Spectral Analysis algorithm ... 9-3
Voltage Supervision algorithm ... 9-4
HTTP ... 5-74
port, close ... 5-74
Humidity specifications ... 2-35
Hysteresis ... 5-178

I

IAC curves ... 5-187
IEC 60870-5-103 protocol
explained ... 5-78
settings ... 5-78
IEC 60870-5-104 protocol
connections remaining ... 6-10
port, close ... 5-76
settings ... 5-75
IEC 61850 protocol
compatibility with previous release ... 5-43
error messages ... 7-10
explained ... 5-43
file transfer ... 5-74
heartbeat messages ... 5-49, 5-50, 5-52
IID file ... 10-2
settings in EnerVista ... 5-43
specifications ... 2-32
IEC 61850-90-5
actual values ... 6-25
IEC 61850-90-5 protocol
explained ... 5-137
settings ... 5-142
IEC CID files ... 5-45
IED setup ... 3-56
IEEE C37.94 communications ... 3-48, 3-51
IEEE curves ... 5-185
IID file ... 10-2
In service indicator ... 7-7
In Service LED ... 3-53
Incipient cable fault detector
actual values ... 6-10
FlexLogic operands ... 5-163
logic diagram ... 5-290
settings ... 5-288
Incompatible hardware error ... 7-8
Inputs
AC current specifications ... 2-28
AC currents ... 5-117
AC voltage ... 5-118
AC voltage specifications ... 2-28
contact input specifications ... 2-28
contact inputs ... 5-298, 5-318
DCmA input specifications ... 2-29
DCmA inputs ... 3-31
direct input specifications ... 2-29
IRIG-B ... 3-35
IRIG-B specifications ... 2-29
RTD input specifications ... 2-29
RTD inputs ... 3-31
virtual ... 5-300
Installation ... 3-2, 3-6
activate relay ... 3-53
add UR devices with auto discovery ... 3-60
communications ... 3-33
CT inputs ... 3-17
RS485 ... 3-34
set relay to Programmed ... 3-53
settings ... 5-116
Instantaneous overcurrent
see Phase, Ground, and Neutral IOCs
Interface
front panel ... 4-13
software ... 4-1
Internet access ... 5-74
Inter-relay communication specifications ... 2-34
Inverse time undervoltage ... 5-232
IOC
see Phase, Ground, and Neutral IOCs
IP address ... 3-57, 5-32
enter on front panel ... 4-13
gateway ... 5-35
IP rating ... 2-35
IP54 for enhanced front panel ... 3-2
IRIG-B
connection ... 3-35
error messages ... 7-9, 7-10
specifications ... 2-29
ISO standards ... 2-37

K

Keypad ... 4-13

L

Lamp test ... 7-3

Language setting 5-25
Laser module 3-39
Latching outputs
application examples 5-303
error messages 7-10
settings 5-302
specifications 2-31
LED test
commands 7-3
FlexLogic operand 5-168
settings 5-95
specifications 2-25
LEDs
clear 5-305
custom labels 4-21
explained 4-18
In Service 3-53
settings 5-97
Trouble 3-53
Link power budget 2-34
Load Analysis algorithm for Hi-Z 9-3
Load encroachment
FlexLogic operands 5-163
logic diagram 5-183
settings 5-182
specifications 2-24
Load Event Detector algorithm for Hi-Z 9-3
Load Extraction algorithm for Hi-Z 9-3
Load shedding 5-253, 5-255
Local access, explained 5-8
Local Setting Authorization 10-5
Lockout from software 5-14
Log in with password 3-68, 5-10
Log out
Administrator manually from front panel 5-20
Logic diagram explained 4-29
Logic gates, FlexLogic 5-170
Logout users forcefully 7-3
Logs, system 5-24
Lost password 5-8

M

MAC address
actual values 6-29
examples 5-30
RxGOOSE 5-53
settings for redundancy 5-32
TxGOOSE 5-51
Maintenance
actual values 6-28
alert to replace battery 7-9
battery replacement 10-7
cleaning 2-37
commands 7-3
module replacement 10-6
upgrades 10-4
Manufacturing date 6-29
Maximum CT/VT wire size 3-16
Menu navigation 4-14
Message about upgrade over Internet 10-5
Messages
clear front panel 5-305
error 7-7
Metering
conventions 6-12, 6-13
demand specifications 2-28
frequency specifications 2-28
power specifications 2-27
THD specifications 2-28
voltage specifications 2-27
MMS
connections remaining 6-10
TCP port number, setting 5-48
Modbus
connections remaining 6-10
Flex State parameters 5-105
port, close 5-38
register entry 5-83
settings 5-37
user map 5-83
Model information, view 6-29
Model number 3-1
Modification file number 6-30
Module failure error 7-8, 7-9
Module replacement 10-6
Modules
communications 3-33
CT/VT 3-16, 5-7
Hi-Z 3-18
order codes 2-14
power supply 3-15
transducer I/O 3-32
Mounting 3-2, 3-6

N

Nameplate, rear 3-1
Negative sequence directional overcurrent
characteristics 5-221
FlexLogic operands 5-163
logic diagram 5-222
settings 5-219
specifications 2-20
Negative sequence IOC
FlexLogic operands 5-163
logic diagram 5-219
settings 5-218
specifications 2-20
Negative sequence overvoltage
FlexLogic operands 5-163
logic diagram 5-237
settings 5-236
specifications 2-22

Negative sequence TOC
FlexLogic operands 5-163
logic diagram 5-218
settings 5-217
specifications 2-19
Neutral directional overcurrent
FlexLogic operands 5-164
logic diagram 5-203
polarization 5-201
settings 5-198
specifications 2-20
Neutral IOC
FlexLogic operands 5-163
logic diagram 5-198
settings 5-197
specifications 2-19
Neutral overvoltage
FlexLogic operands 5-164
logic diagram 5-236
settings 5-235
specifications 2-22
Neutral TOC
FlexLogic operands 5-164
logic diagram 5-197
settings 5-196
specifications 2-19
Non-volatile data storage 3-16
Non-volatile latches
FlexLogic operands 5-163
settings 5-180
specifications 2-25

O

Obtain list of port numbers 5-32
One-shot
commands menu, PMU 7-4
FlexLogic operators 5-170
Operating temperature 2-35
Operating times 2-19
Operator command to force logoff 7-6
Order codes 2-7
actual values 6-29
update 7-3
Oscillatory transient testing specifications 2-36
Oscillography
actual values 6-27
clearing 5-27, 7-2
settings 5-90
specifications 2-26
via EnerVista software 4-2
Out of service 5-1
Outputs
contact outputs 5-301
control power specifications 2-32
critical failure relay specifications 2-31
Fast form-C relay specifications 2-31
Form-A relay 2-30, 3-20
Form-C relay 3-20
Form-C relay specifications 2-31
latching output specifications 2-31
latching outputs 5-302
virtual outputs 5-305
Overcurrent curve types 5-184
Overcurrent curves
FlexCurves 5-189
IAC 5-187
IEC 5-186
Overfrequency
FlexLogic operands 5-164
logic diagram 5-254
settings 5-253
specifications 2-22
testing 8-1
Overvoltage
auxiliary 2-22, 5-238
negative sequence 5-236
negative-sequence 2-22
neutral 2-22, 5-235
phase 2-21, 5-234

P

Panel cutout 3-2, 3-6
Parallel Redundancy Protocol
actual values 6-11
explained 5-33
settings 5-32
specifications 2-33
parity 5-29
Part numbering 2-7
Passwords
authentication by device or server 5-16
bypass authentication 5-22
change 4-27
change after installation 3-68
change does not take relay out of service 5-1
command 4-27, 5-10
default 5-14
explained 2-3
FlexLogic operands 5-168
lockout 4-28, 5-14
lost password 5-8
requirements 5-8
reset to factory defaults 5-8
rules 5-8
settings 4-27, 5-10
settings templates 4-6
wrong entry 4-28
Permissive functions 5-232

Per-unit quantity 5-4
Phase angle metering 6-13
Phase current metering 6-16
Phase directional overcurrent
  FlexLogic operands 5-164
  logic diagram 5-195
  phase A polarization 5-193
  settings 5-192
  specifications 2-20
Phase IOC
  FlexLogic operands 5-164
  logic diagram 5-192
  settings 5-191
  specifications 2-19
Phase overvoltage
  FlexLogic operands 5-164
  logic diagram 5-235
  settings 5-234
  specifications 2-21
Phase rotation 5-119
Phase TOC
  FlexLogic operands 5-165
  logic diagram 5-191
  settings 5-189
  specifications 2-19
Phase undervoltage
  FlexLogic operands 5-165
  logic diagram 5-234
  settings 5-233
  specifications 2-21
Phasor explained 5-137
PMU
  actual values 6-24, 6-25, 6-28
  connections remaining 6-11
  explained 5-137
  number in UR device 5-138
  see Synchrophasor
  settings, aggregator 5-154
  settings, recording 5-153
  settings, tests 5-319
  status of activation 6-30
Port
  HTTP, close 5-74
  IEC 60870-5-104, close 5-76
  Modbus, close 5-38
  SNTP, close 5-87
  TFTP, close 5-75
Port number
  combinations with protocols 5-38
  DNP 5-38
  HTTP 5-74
  IEC 60870-5-104 5-75
  list of 5-32
  Modbus 5-37
  Modbus during installation 3-60
  RADIUS 5-18
  SNTP 5-87
  system log 5-19, 5-20
  TFTP 5-75
Power metering
  specifications 2-27
  values 6-18
Power off, save data first 3-16
Power supply
  description 3-15
  removal to replace battery 10-7
  RH/RL vs SH/SL 10-7
  specifications 2-30
Power system settings 5-119
Precision Time Protocol
  settings 5-84
Process bus
  order codes for compatible URs 2-7
  overview 3-19
Product information
  actual values 6-29
  firmware revision 6-30
Programmed mode 3-53
Protection elements 5-4
PRP
  actual values 6-11
  explained 5-33
  settings 5-32
  specifications 2-33
PTP
  settings 5-84
pu quantity 5-4
Pushbuttons
  control FlexLogic 5-160
  control logic diagram 5-100
  control settings 5-99
  control specifications 2-25
  user-programmable FlexLogic 5-169
  user-programmable logic diagrams 5-104
  user-programmable settings 5-100
  user-programmable specifications 2-25

Q

Quick Connect 3-62, 3-63

R

RADIUS server
  authentication 5-16
  setup B-1
Randomness algorithm for Hi-Z 9-2
Reactive power 6-18
Reactive power specifications 2-27
Real power 6-18
Real power specifications 2-27
Real-time clock
  actual values for synchronization 6-7
  settings 5-83
Reboot relay
  using EnerVista 5-45
  using relay 7-3
Recloser curves 5-132, 5-189
Redundancy
  power supply 10-7
  PRP actual values 6-11
  PRP explained 5-33
  settings 5-32
  specifications 2-33
Relay architecture 5-158
Relay maintenance 7-3
Relay name 5-116
Remote access, explained 5-8
Remote Setting Authorization 10-5
Repair 1-2, 10-13, D-1
Replace battery 10-7
Replace battery message 7-9
Replace module 10-6
Replacement modules 2-14
Requirements for installation 3-55
Reset to factory defaults 5-8, 5-21
Resetting
  FlexLogic operands 5-168
  setting to clear LEDs and messages 5-305
  to factory defaults 5-8
Restart relay
  using EnerVista 5-45
  using relay 7-3
Restore settings 10-2
Restricted ground fault
  actual values 6-25
  FlexLogic operands 5-165
  logic diagram 5-216
  settings 5-210
  specifications 2-19
Revision history D-1
RF immunity specifications 2-36
RFI, conducted specifications 2-36
R-GOOSE description 5-48
RH/RL power supply module 10-7
RMS voltage specifications 2-27
Rolling demand 5-95
Routable GOOSE
  explained 5-48
RRTD COMM FAIL error 7-13
RS232
  baud rate 5-29
  configuration 3-62
  specifications 2-32
  wiring 3-33
RS422
  configuration 3-44
  timing 3-45
  two-channel application 3-44
  with fiber interface 3-46
RS485
  description 3-34
  limitation with CyberSentry 5-17
  settings 5-29
  specifications 2-32
RTD inputs
  actual values 6-26
  settings 5-312
  specifications 2-29
Rules for passwords 5-8
RxGOOSE
  actual values 6-24
  error messages 7-11
  settings 5-52
RxGOOSE Offline error 7-11

S

Save settings 4-1
Saving setting does not take relay out of service 5-1
Security
  commands 7-6
  delete files and records 10-13
  forceful user logout 7-3
  lock FlexLogic equations 4-9
  password for settings template 4-6
  passwords for settings and commands 4-27, 5-10
  settings 5-20
Security audit list of port numbers 5-32
Selector switch
  actual values 6-6
  application example 5-250
  FlexLogic operands 5-165
  logic diagram 5-252
  settings 5-245
  specifications 2-25
  timing 5-249
Self-tests
  description 7-7
  error messages 7-9
  FlexLogic operands 5-169
  user-programmable 5-98

Sensitive directional power
  actual values 6-22
  characteristic 5-240
  FlexLogic operands 5-162
  logic diagram 5-242
  settings 5-239
  specifications 2-21
Serial number 3-1, 4-10, 6-29
Serial ports
  settings 5-29
  specifications 2-32
Server authentication 5-16
Server unavailable self-test 7-13
Service life expected 10-1
Setting groups 5-181, 5-182, 5-244
  active setting group 5-181
  FlexLogic operands 5-165
  troubleshooting 5-182
Setting lock self-test 7-12
Settings 5-1
  back up 5-45, 10-2
  change 4-15
  change does not take relay out of service 5-1
  control user accounts 5-14
  edit 4-15
  export 10-2
  not udpated automatically among computers 3-61
  restore 10-2
Settings file 5-45
  takes relay out of service when loaded 4-2
Settings files 4-1, 4-11
Settings password 4-27, 5-10
Settings templates
  description 4-4
  edit 4-5
  enable 4-4
  password protection 4-6
  remove 4-8
  view 4-7
SFP module fail message 7-12
SH/SL power supply module 10-7
Signal loss detection for fiber 5-33
Signal sources
  description 5-6
  metering 6-16
  settings 5-120
Simulation bit 5-316
Single-line diagram 2-2
Smart defaults 5-90
SNTP protocol
  accuracy specifications 2-33
  error messages 7-10
  port, close 5-87
  settings 5-87
Software
  installation 3-56
  interface explained 4-1
  system requirements 3-55
Source frequency 6-20
Source transfer schemes 5-232
Sources
  description 5-6
  example of use 5-121
  metering 6-16
  settings 5-120
Specifications 2-18
Spectral Analysis algorithm for Hi-Z 9-3
Standards, certification 2-37
Status LEDs 4-20
Storage 10-14
Storage media alarm 7-13
Support, technical 1-2
Surge immunity specifications 2-36
Synchrocheck
  actual values 6-22
  FlexLogic operands 5-166
  logic diagram 5-259
  settings 5-256
  specifications 2-23
Synchrophasors
  actual values 6-24, 6-28
  clearing PMU records 7-2
  commands 7-4
  explained 5-137
  FlexLogic operands 5-164, 5-165
  phasor measurement configuration 5-142, 5-154, 5-156
  phasor measurement unit calibration 5-146
  phasor measurement unit recording 5-153
  test values 5-319
Syslog 5-24
System Exception message 7-11
System frequency 5-119
System logs 5-24
System requirements 3-55
System setup 5-117

T

Target messages 7-7
TARGET setting 5-5
Targets menu 7-7
TBD 10-2
TCP port number for web access 5-74
Technical support 1-2
Teleprotection
  actual values 6-4
  clearing counters 7-2
  FlexLogic operands 5-166, 5-167
  logic diagram 5-310
  overview 5-309
  settings 5-115, 5-309, 5-310
  specifications 2-30

Temperature
FlexLogic monitor operand 5-169
monitor 7-11
operating 2-35
Test voltages 3-14
Testing
force contact inputs 5-318
force contact outputs 5-318
lamp test 7-3
LEDs 7-3
over/underfrequency 8-1
self-test error messages 7-7
settings 5-316, 5-317
synchrophasors 5-319
TFTP
port, close 5-75
put cannot be done 5-75
settings 5-75
THD metering 6-21
analog channel correspondence 5-92
THD metering specifications 2-28
Thermal demand characteristic 5-94
Thermal overload protection
logic diagram 5-296
settings 5-294
specifications 2-24
Time
actual values 6-7, 6-28
FlexLogic timer settings 5-176
operating 6-29
overwritten by external source 7-3
set 7-3
settings 5-83
Time overcurrent
see Phase, Neutral, and Ground TOCs
TOC
ground 5-208
neutral 5-196
phase 5-189
specifications 2-19
Torque for screws 2-37, 3-12
Traceability
data 4-12
overview 4-11
rules 4-13
view data 4-13
Tracking frequency 6-23
Transducer I/O
actual values 6-25
settings 5-311
specifications 2-29
wiring 3-32
Trip bus
FlexLogic operands 5-167
logic diagram 5-244
settings 5-242
Trip LEDs 5-97
Trouble indicator 7-7
Trouble LED 3-53
Troubleshooting
access to device 3-61
breaker not working 5-266
error messages 7-7
setting not working 5-266
unit not programmed error 5-116
TxGOOSE
settings 5-49

U

UDP for TFTP 5-75
UL certification 2-37
Unable to access device 3-61
Unable to put relay in flash mode 10-5
Unauthorized access
commands 5-28
resetting 7-2, 7-3
Unauthorized firmware attempt message 7-12
Unauthorized setting write message 7-12
Underfrequency
FlexLogic operands 5-167
logic diagram 5-253
settings 5-252
specifications 2-22
testing 8-1
Undervoltage
auxiliary 2-21
characteristics 5-232
phase 2-21, 5-233
settings 5-233
Uninstall 10-13
Unit not programmed 5-116
Unit not programmed message 7-8
Unpacking the relay 3-1
Unreturned messages alarm 5-114
Updates
device not recognized 10-5
firmware 10-4
instruction manual 3-1
order code 7-3
Upgrade over Internet message 10-5
URS settings file 5-45, 10-2
User accounts
add 5-14
authentication by device or server 5-16
passwords for settings and commands 4-27, 5-10
User-definable displays
example 5-107
invoking and scrolling 5-106
settings 5-106
specifications 2-25

User-programmable LEDs
custom labels 4-21
defaults 4-21
settings 5-97
specifications 2-25
User-programmable pushbuttons
FlexLogic operands 5-169
logic diagrams 5-104
settings 5-100
specifications 2-25
User-programmable self-tests
settings 5-98

V

VAR hour
actual values 6-19
specifications 2-27
Vibration testing specifications 2-36
Virtual inputs
actual values 6-3
commands 7-2
explained 5-300
FlexLogic operands 5-167
logic diagram 5-301
settings 5-300
Virtual outputs
actual values 6-5
explained 5-305
FlexLogic operands 5-168
settings 5-305
Voltage banks 5-118
Voltage deviation specifications 2-36
Voltage elements 5-232
FlexElement is phase to ground 5-179
Voltage metering
actual values 6-17
specifications 2-27
Voltage Monitor error 7-13
Voltage restraint characteristic 5-190
VT fuse failure
FlexLogic operands 5-166
logic diagram 5-291
settings 5-290
VT inputs 3-16, 3-17, 5-7, 5-118
VT wiring 3-17
VTFF 5-290

W

Warranty D-1
Watt-hour specifications 2-27
Watt-hours 6-19
Wattmetric zero-sequence directional
actual values 6-24
FlexLogic operands 5-167
logic diagram 5-207
settings 5-203
specifications 2-21
Web server protocol 5-74
Wire size
CT/VT 3-16
G.703 and fiber interface 3-47
G.703 interface 3-40
RS422 and fiber interface 3-46
RS422 interface 3-44
Wiring diagram 3-13
Withdrawal from operation 10-13
Wrong transceiver message 7-12

Z

Zero-sequence core balance 3-17

GE VERNOVA

GE Vernova
650 Markland Street
Markham, Ontario
Canada L6C 0M1
Worldwide telephone: +1 905 927 7070
Europe/Middle East/Africa telephone: +34 94 485 88 54
North America toll-free: 1 800 547 8629
Fax: +1 905 927 5098
Worldwide e-mail: GA.support@gevernova.com
Website: https://www.gevernova.com/grid-solutions/multilin/