GE Industrial Systems

# FM2

## Feeder Manager 2

## INSTRUCTION MANUAL

Firmware Revision: 1.1x
Software Revision: 1.1x

Manual P/N: 1601-0154-A4
Manual Order Code: GEK-106559C

Copyright © 2014 GE Multilin




**GE Digital Energy**
650 Markland Street
Markham, Ontario
Canada L6C 0M1
Tel: +1 905 927 7070 Fax: +1 905 927 5098
Internet: http://www.gedigitalenergy.com

GE Multilin's Quality Management System is registered to ISO9001:2000

QMI # 005094
UL # A3775




# Table of Contents


## INTRODUCTION

### Overview
Description ..... 1-1
Features ..... 1-1

### Ordering
Order Codes ..... 1-2
Accessories ..... 1-2
Special Order ..... 1-2

### Specifications
FM2 Specifications ..... 1-3

## INSTALLATION

### Mounting
Description ..... 2-1

### Inputs and Outputs
Phase CT Inputs ..... 2-4
Earth Fault CT Input ..... 2-4
Supply Voltage ..... 2-4
Surge Earthing ..... 2-5
External Connections ..... 2-5
ESD Coil ..... 2-5
Output Relays ..... 2-5
Switch Inputs ..... 2-5
Programmable Switch Inputs ..... 2-5
Serial Communication Port ..... 2-5
Open ..... 2-6
Close A/B ..... 2-6
Test Status N/O ..... 2-6
Contactor Status ..... 2-6
Switch Common ..... 2-7
Dielectric Strength Testing ..... 2-7

## HARDWARE

### Faceplate Functions
Description ..... 3-1
Message Display ..... 3-1
Indicator LEDs ..... 3-1

### Keypad
Setpoints Key ..... 3-2
Actual Values Key ..... 3-2

Store Key ..... 3-3
Open Key ..... 3-3
Reset Key ..... 3-3
Close A Key ..... 3-3
Close B Key ..... 3-3
Message Up/Down Keys ..... 3-3
Message Left/Right Keys ..... 3-4
Value Up/Down Keys ..... 3-4
Auto/Manual Keys ..... 3-4

**SOFTWARE**

**Introduction**
Overview ..... 4-1
Hardware ..... 4-1
Installing the EnerVista FM2 setup software ..... 4-2

**Configuring Serial Communications**
Description ..... 4-3

**Using the EnerVista FM2 setup software**
Entering Setpoints ..... 4-4
Saving Setpoints To A File ..... 4-5
Loading Saved Setpoints ..... 4-5
Viewing Actual Values ..... 4-5
Setpoint Files ..... 4-5
Getting Help ..... 4-5

**Trending**
Description ..... 4-6

**Upgrading Relay Firmware**
Description ..... 4-8
Saving Setpoints ..... 4-8
Loading New Firmware ..... 4-8

**SETPOINTS**

**Overview**
Setpoints Main Menu ..... 5-1
Overview ..... 5-2
Abbreviations ..... 5-3

**S1 Configuration**
Communications ..... 5-3
Feeder Identification ..... 5-4
Feeder ..... 5-4
CT/VT Inputs ..... 5-4
Fault Mode ..... 5-5
Statistics ..... 5-5

**S2 Protection**
IEC Overload Curves ..... 5-6
Thermal Protection ..... 5-10
Earth Fault Protection ..... 5-10

**S3 Process**
Configurable Inputs ..... 5-11
Process Interlock Names ..... 5-14
Open Configuration ..... 5-14

**S4 Control**
Undervoltage Autoreclose ..... 5-15
Prog Relay 1 Config ..... 5-16

**S5 Monitoring**
Plant Condition ..... 5-17

**S6 Factory Data**
Product Firmware ..... 5-18
Product Model ..... 5-18
Factory Service Data ..... 5-18

## MONITORING

**Actual Values Viewing**
Actual Values Menu ..... 6-1
Description ..... 6-2
Default Message Selection ..... 6-2
Abbreviations ..... 6-2

**A1 Data**
Feeder Data ..... 6-3

**A2 Status**
Trip Data ..... 6-4
Alarm Data ..... 6-5
Feeder Status ..... 6-6

**A3 Inputs**
Input Contacts Status ..... 6-7

**A4 Statistics**
Timers ..... 6-7
Counters ..... 6-8

## COMMUNICATIONS

**FM2 Modbus Protocol**
Overview ..... 7-1
Electrical Interface ..... 7-1
Data Frame Format and Data Rate ..... 7-1
Data Packet Format ..... 7-2
Error Checking ..... 7-2
CRC-16 Algorithm ..... 7-3
Timing ..... 7-3

**Modbus Functions**
FM2 Supported Functions ..... 7-3
Function Code 01h ..... 7-4
Function Code 03h ..... 7-4
Function Code 04h ..... 7-5
Function Code 05h ..... 7-6
Function Code 06h ..... 7-6
Function Code 07h ..... 7-7
Function Code 08h ..... 7-7
Function Code 10h ..... 7-8
Error Responses ..... 7-8

**Applications**
Performing Commands with Function Code 10h ..... 7-9
Storing Communications Addresses via the Broadcast Command ..... 7-10

**Memory Map**
Description ..... 7-11
Data Formats ..... 7-21

## TESTING

**Injection Testing**
Primary Injection Testing ..... 8-1
Secondary Injection Testing ..... 8-1

**Functional Tests**
Phase Current Functions ..... 8-3

Earth Fault Current Functions....8-3
Input Functions....8-4
Power Fail Test....8-4

**FEEDER TYPES**

**Contactor Type**
Description....9-1
FM2 Sequences for Contactor A....9-2
FM2 Sequences for Contactor B....9-2

**Circuit Breaker Feeder**
Description....9-4
FM2 Sequences....9-4

**CONTROL WIRE**

**Two Wire Control**
Description....10-1
Control Operation....10-1

**Hand/Off/Auto Configuration**
2-Wire Hand / 2-Wire Auto Description....10-2
2-Wire Hand / 2-Wire Auto Control Operation....10-2
3-Wire Hand / 2-Wire Auto Description....10-4
3-Wire Hand / 2-Wire Auto Control Operation....10-4
3 Wire Hand / 3 Wire Auto Description....10-5
3 Wire Hand / 3 Wire Auto Control Operation....10-5

**Hand/Auto Configuration**
3-Wire Hand / 2-Wire Auto....10-7
Control Operation....10-7

**APPENDIX**

**Frequently Asked Questions**
Questions and Answers....11-1

**DOs and DON'Ts Checklist**
FM2 Earthing....11-3
Earthing of Phase and Earth Fault CTs....11-3
RS485 Communications Port....11-3
Switch Inputs....11-4
Open Switch Input....11-4
Contactor Status Feedback....11-4

**CT Isolation**
FM2 CT Withstand....11-4
CT Size and Saturation....11-4

**Revision History**
Release Dates....11-7

**GE Multilin Warranty**
Warranty Statement....11-7




# 1 Introduction

## Overview

### Description

The FM2 combines control functions normally found in a low voltage power control center (PCC) with feeder protection. This compact, microprocessor-based device provides sophisticated control and protective relaying at significant cost savings over a PCC design using discrete devices.

Standard features in every FM2 simplify maintenance and plant expansion. One FM2 is required for every contactor/breaker unit in the PCC. The contactor can be energised and de-energised using the FM2's direct-wired inputs, or via the serial port.

Feeder protection is included for the basic causes of failure to prevent costly shutdowns. These include 3 phase thermal overload and earth fault protection.

A two wire RS485 Modbus protocol communications port is provided for high-speed communications with a complete line-up of PCCs. Any FM2 may be interrogated on demand, to determine both Actual and Setpoint operating parameters. Fast response time to a request for alarm or trip status makes real time control of a complete process possible. Statistical recording of running hours and number of contactor operations and trips assists with predictive maintenance scheduling.

### Features

The FM2 has been developed with economy in mind. The customer is able to choose from different options to achieve maximum benefit from the relay when integrated into the process environment.

The basic FM2 comes with 3 phase thermal overload protection (49/51), earth fault protection (50G), six control inputs (Close A, Close B, Open, Test Mode, Contactor A status, and Contactor B status), 10 programmable inputs, two fixed outputs (relay A and relay B), and one programmable output relay. The following additional features are available:

- 20 × 2 alphanumeric display (Option PD)
- 1 additional electromechanical relay: ESD Relay
- programmable undervoltage reclose of feeders following an undervoltage condition
- diagnostics which includes pretrip data and historical statistics
- single phase voltage input which allows the FM2 to calculate and display kW and kWh

# Ordering

## Order Codes

**TABLE 1–1: Selection Guide**

| | FM2 | * | * | |
|---|---|---|---|---|
| **Base Unit** | FM2 | \| | \| | Product Family |
| **Model** | | 712 | \| | 120 V AC VT and switch input voltage |
| | | 722 | \| | 240 V AC VT and switch input voltage |
| **Mounting** | | | PD | Panel mount with display |
| | | | C | Chassis mount (black box) |

NOTE

All models contain three phase thermal overload protection (49/51), earth fault protection (50G), undervoltage reclose, current, voltage, power and energy metering, timers and counters, 6 control inputs (Close A, Close B, Open, Test Mode, Contactor A status, Contactor B Status), plus 10 programmable inputs, two output relays, one programmable relay, and ESD (emergency shutdown) relay. The relay unit can be powered up by 120/240 V AC, 50 or 60 Hz. The selection of control voltage shall be made by shifting the slide switch on back of the relay to the desired voltage.

**MODEL:**

- **712:** VT input and switch inputs are rated for 120 V AC, 50 or 60 Hz.
- **722:** VT input and switch inputs are rated for 240 V AC, 50 or 60 Hz.

**MOUNTING:**

- **Chassis mount:** "Black box" version of the FM2 mounted inside the PCC panel.
- **Panel mount and display:** Mounted on a panel with a 20 × 2 display, LEDs, and keypad.

## Accessories

- **EnerVista FM2 Setup software:** No-charge software package to aid in setting up FM2 operating parameters.
- **RS232/485:** RS232 to RS485 converter box designed for harsh industrial environments.
- **5 A Phase CT:** 50, 75, 100, 150, 200, 250, 300, 350, 400, 500, 600, 750, and 1000.
- **1 A Phase CT:** 50, 75, 100, 150, 200, 250, 300, 350, 400, 500, 600, 750, and 1000.
- **50:0.025 Earth Fault CT:** For sensitive earth fault detection on high resistance earthing systems.
- **Collar:** For reduced depth mounting.
- **Open key cover:** To prevent accidental pressing of the OPEN key.
- **Control key cover:** Full cover on control keys

## Special Order

- **Mod 610:** provides protection in harsh environments

# Specifications

## FM2 Specifications

**Design and specifications are subject to change without notice.**

### PHASE CURRENT INPUTS

Conversion: true RMS, sampling time of 12 samples/cycle for 50 Hz and 10 samples/cycle for 60 Hz

Range: 0.1 to 8 × **PHASE CT PRIMARY AMPS** setpoint

Full scale: 8 × **PHASE CT PRIMARY AMPS** setpoint

Accuracy: ±2% of **PHASE CT PRIMARY AMPS** setpoint or ±2% of reading, whichever is greater

### EARTH FAULT CURRENT INPUT

Conversion: true RMS, sampling time of 12 samples/cycle for 50 Hz and 10 samples/cycle for 60 Hz

Range: 0.1 to 1.0 × **PHASE CT PRIMARY AMPS** setpoint (for 5 A secondary CT)
0.5 to 15.0 A (for 50:0.025 CT)

Full scale: 1.5 × **PHASE CT PRIMARY AMPS** (for 5 A secondary CT)
15 A (for 50:0.025 CT)

Accuracy:
5 A CT: ±2% of full scale
50:0.025 CT: ±0.20 A (0.5 to 15.00 A)

### VOLTAGE INPUT / POWER READING

Conversion: true RMS, sampling time of 12 samples/cycle for 50 Hz and 10 samples/cycle for 60 Hz

Voltage full scale: 1.5 × VT Primary

Voltage accuracy: ±2% of VT Primary or ±2% of reading, whichever is greater

Power accuracy: ±5% of nominal or ±5% of reading, whichever is greater

Range: –12500 to 12500 kW

Nominal input voltage: 120 V AC or 240 V AC

Maximum input voltage:
150 V AC for FM-712-*-*
300 V AC for FM-722-*-*

VT burden: 0.01 VA

### OVERLOAD CURVES

Trip time accuracy:
±200 ms up to 10 seconds
±2% of trip time over 10 seconds

Detection level: ±1% of primary CT amps

### EARTH FAULT TRIP TIME

Accuracy: –0 ms / +50 ms,
0.0 = less than 50 ms

### CURRENT IMBALANCE

Calculation Method:

if $I_{AV} \geq I_{FLC}$: Imbalance $= \frac{|I_M - I_{AV}|}{I_{AV}} \times 100\%$

if $I_{AV} < I_{FLC}$: Imbalance $= \frac{|I_M - I_{AV}|}{I_{FLC}} \times 100\%$

where: $I_{AV}$ = average phase current
$I_M$ = current in a phase with maximum deviation from $I_{AV}$
$I_{FLC}$ = **FEEDER RATING** setpoint

### COMMUNICATIONS

Type: RS485 2 wire, half duplex

Baud rate: 1200 to 19200 baud

Protocol: Modbus RTU

Functions: Read/write setpoints, Read coil status, Read actual values, Read device status, Execute commands, Loopback Test

### DIGITAL INPUTS

Inputs: 6 fixed and 10 configurable inputs, optically isolated

Input type: dry contact

### RELAY A & B AND ESD RELAY CONTACTS

Break:

| VOLTAGE | | BREAK |
|---|---|---|
| Resistive | 30 V DC | 10 A |
| | 125 V DC | 0.5 A |
| | 250 V DC | 0.3 A |
| Inductive (L/R = 7 ms) | 30 V DC | 5 A |
| | 125 V DC | 0.25 A |
| | 250 V DC | 0.15 A |
| Resistive | 120 V AC | 10 A |
| | 240 V AC | |
| Inductive (PF = 0.4) | 120 V AC | 10 A |
| | 225 V AC | 8 A |

Make/carry: 10 A continuous
30 A for 0.2 seconds

Configuration: Relay A and B: Form-A
ESD Relay: Form-C

Contact material: silver alloy (AgCdO)

Max. operating voltage: 280 V AC, 250 V DC

Maximum permissible load: 5 V DC, 100 mA

### PROGRAMMABLE RELAY OUTPUT CONTACTS

Break:

| VOLTAGE | | BREAK |
|---|---|---|
| Resistive | 30 V DC | 5 A |
| | 125 V DC | 0.25 A |
| Inductive (L/R = 7 ms) | 30 V DC | 2.5 A |
| | 125 V DC | 0.1 A |
| Resistive | 120 V AC | 5 A |
| | 240 V AC | |
| Inductive (PF = 0.4) | 120 V AC | 5 A |
| | 225 V AC | 3 A |

Make/carry: 5 A continuous
15 A for 0.2 seconds

Configuration: dual Form C

Contact material: silver alloy (AgCdO)

Max. operating voltage: 280 V AC, 125 V DC

### UNDERVOLTAGE/SUPPLY VOLTAGE

Undervoltage: 65% of nominal (120 V AC or 240 V AC)

Reclose: immediate reclose for maximum dip time of 0.1 to 0.5 seconds or OFF;

Delay 1 Reclose: delayed reclose for maximum dip time of 0.1 to 10.0 seconds or UNLIMITED

Delay 2 Reclose: delayed reclose for maximum dip time of 0.5 to 60.0 minutes or OFF

Delay reclose range: 0.2 to 300 seconds

Delay reclose accuracy: ±0.2 seconds

### CT BURDEN

| CT INPUT | CURRENT | BURDEN | |
|---|---|---|---|
| | | VA | OHMS |
| 1 A Phase CT | 1 A | 0.009 | 0.01 |
| | 5 A | 0.2 | |
| | 20 A | 3.5 | |
| 5 A Phase CT | 5 A | 0.04 | 0.002 |
| | 25 A | 0.9 | |
| | 100 A | 16 | |
| 5 A Earth Fault CT | 5 A | 0.04 | 0.002 |
| | 25 A | 1.1 | |
| | 100 A | 17 | |
| 50:0.025 Earth Fault CT | 0.025 A | 0.07 | 116 |
| | 0.1 A | 1.19 | 119 |
| | 0.5 A | 30.5 | 122 |

### CT WITHSTAND

Phase CTs: 100 × CT for 1 sec.
40 × CT for 5 sec.
3 × CT continuous

Earth Fault CT: 100 × CT for 1 sec.
40 × CT for 5 sec.
3 × CT continuous

50:0.025A CT: 150 mA continuous
12 A for 3 cycles maximum

### SUPPLY VOLTAGE

AC nominal: 120 V AC, range 108 to 135 V AC; 240 V AC, range 216 to 250 V AC

Frequency: 50/60 Hz

Power consumption: 25 VA (maximum)
7 VA (nominal)

### TYPE TESTS

Transients: ANSI/IEEE C37.90.1 Oscillatory/Fast Risetime Transients; IEC 255-22-4 Electrical Fast Transient/Burst Requirements

Impulse: IEC 255-5 5 kV Impulse Voltage Test

RFI: IEC 255-22-3, 5 V/m with portable transmitter

Static: IEC 255-22-2 Electrostatic Discharge

Hi-Pot: 1500 V, 1 minute; all inputs > 30 V

### PRODUCTION TESTS

Dielectric strength: 2200 VAC for 1 second (per UL & CE)

### ENVIRONMENT/GENERAL INFORMATION

Pollution degree: 2

Overvoltage category: 2

Insulation voltage: 300 V

Operating temperature range: 0°C to 60°C

Dust and moisture rating: NEMA Type 12 and 12K

IP class: IEC 529 - IP30

### PHYSICAL

Max. weight: 4 lbs. (1.8 kg)

Shipping box: 8.30" (211 mm) × 5.625" (143 mm) × 5.80" (147 mm)

### FUSE

Type: 0.5 A; 250 V Fast Blow, High breaking capacity

### INSTALLATION

Warning: HAZARD may result if the product is not used for its intended purpose

Ventilation requirements: None

Cleaning requirements: None

### CERTIFICATION/COMPLIANCE

CE: IEC 61010-1

cULus: E83849 UL listed for the USA and Canada

NOTE

**It is recommended that all FM2 relays are powered up at least once per year to avoid deterioration of electrolytic capacitors in the power supply.**




# 2 Installation



## Mounting

**Description**

Cut the panel as shown below to mount the FM2. Use either #8-32 or #6 × ½" mounting screws provided to mount the FM2 to the panel.

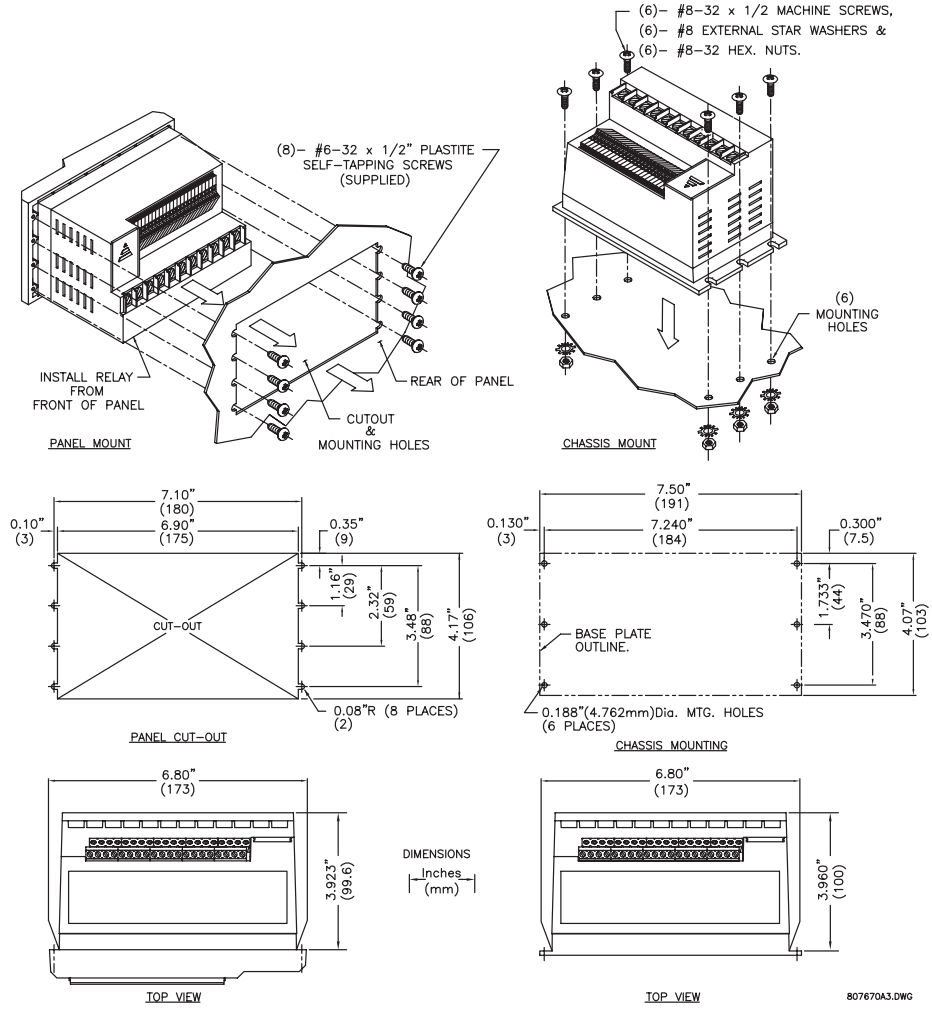


**FIGURE 2–1: FM2 Mounting Instructions**

The dimensions for the standard FM2 and the FM2 with reduced mounting collar are shown below:

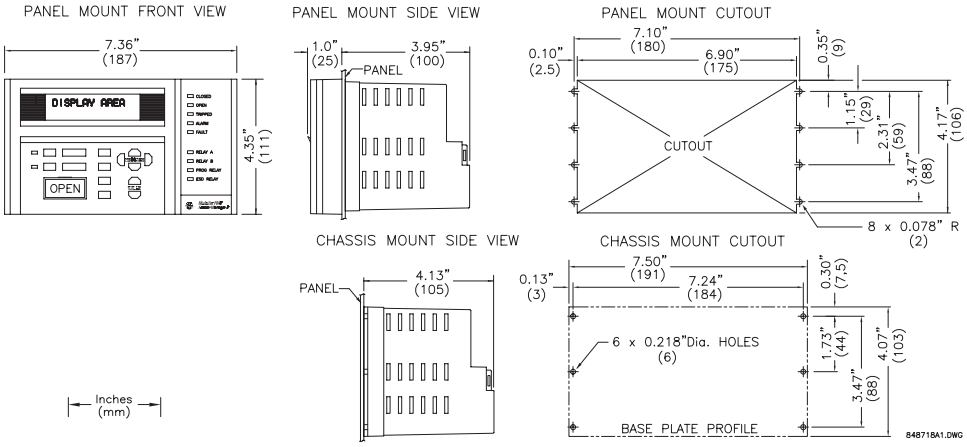


**FIGURE 2–2: FM2 Dimensions**

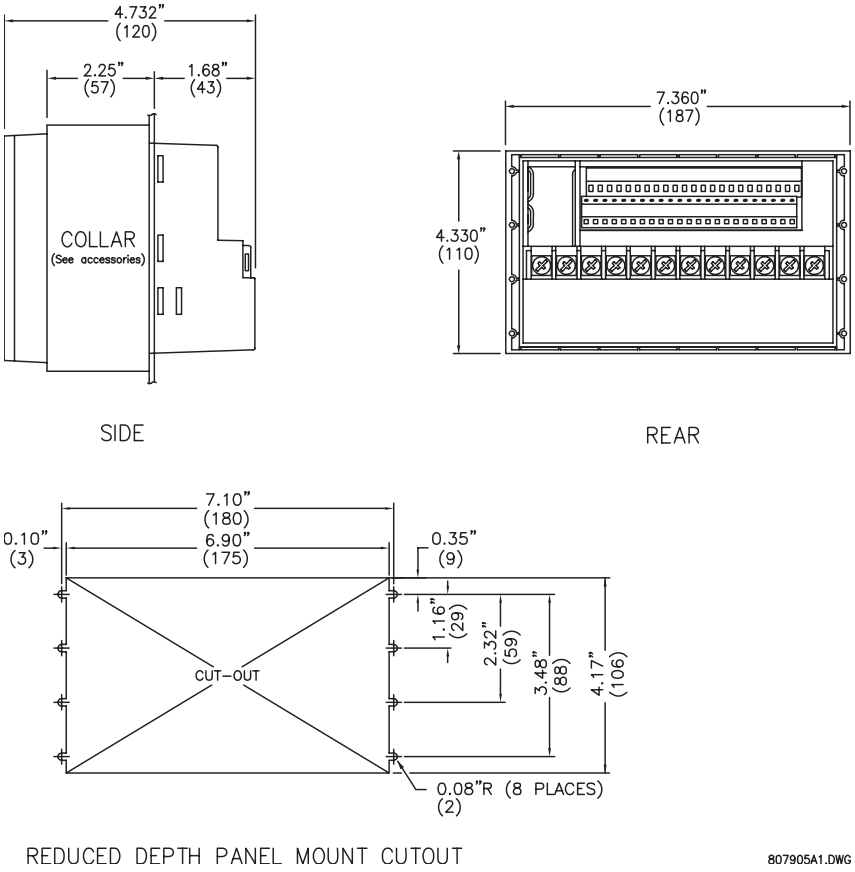


**FIGURE 2–3: FM2 with Depth Reduction Collar Dimensions**

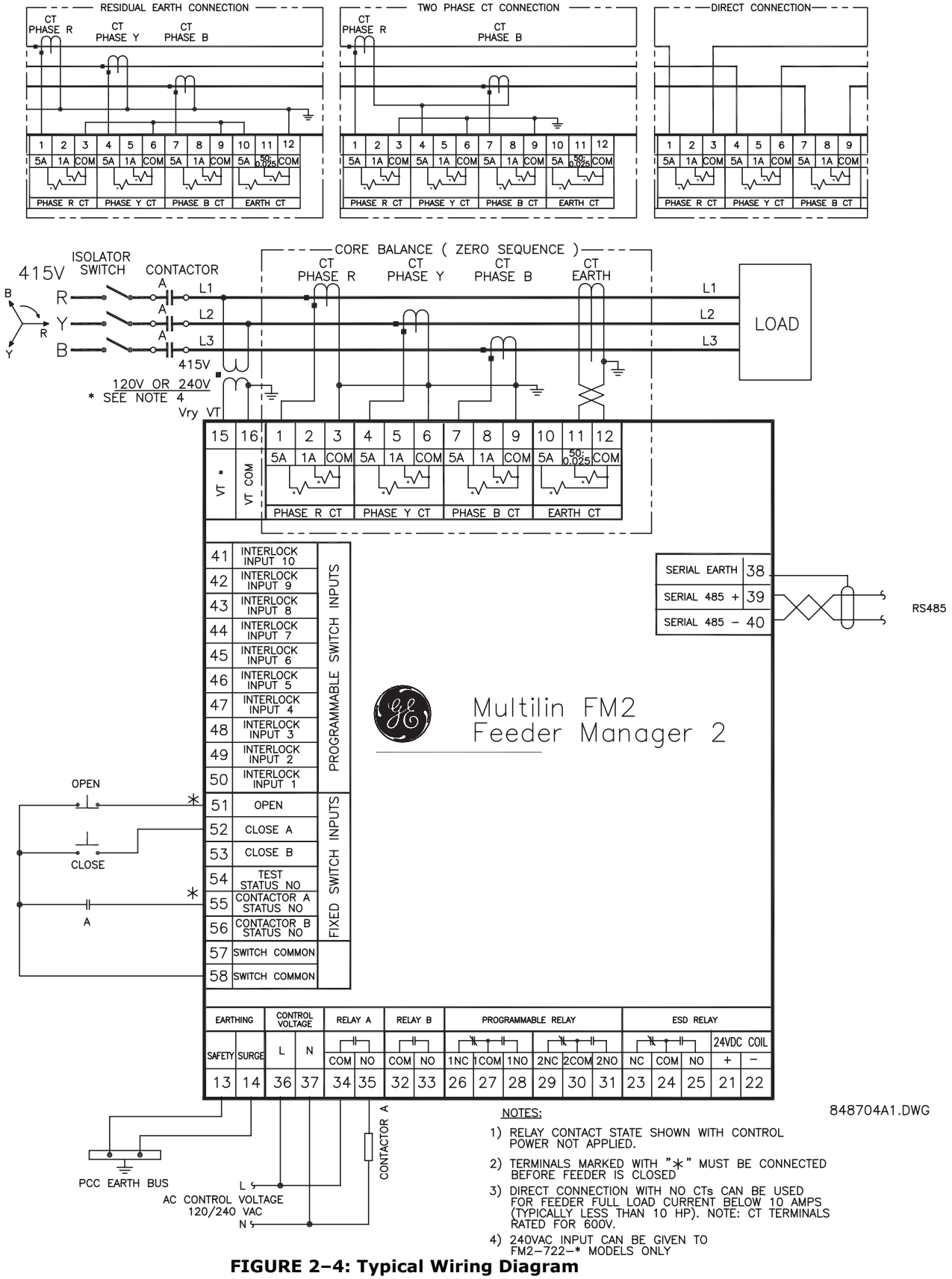


**FIGURE 2–4: Typical Wiring Diagram**

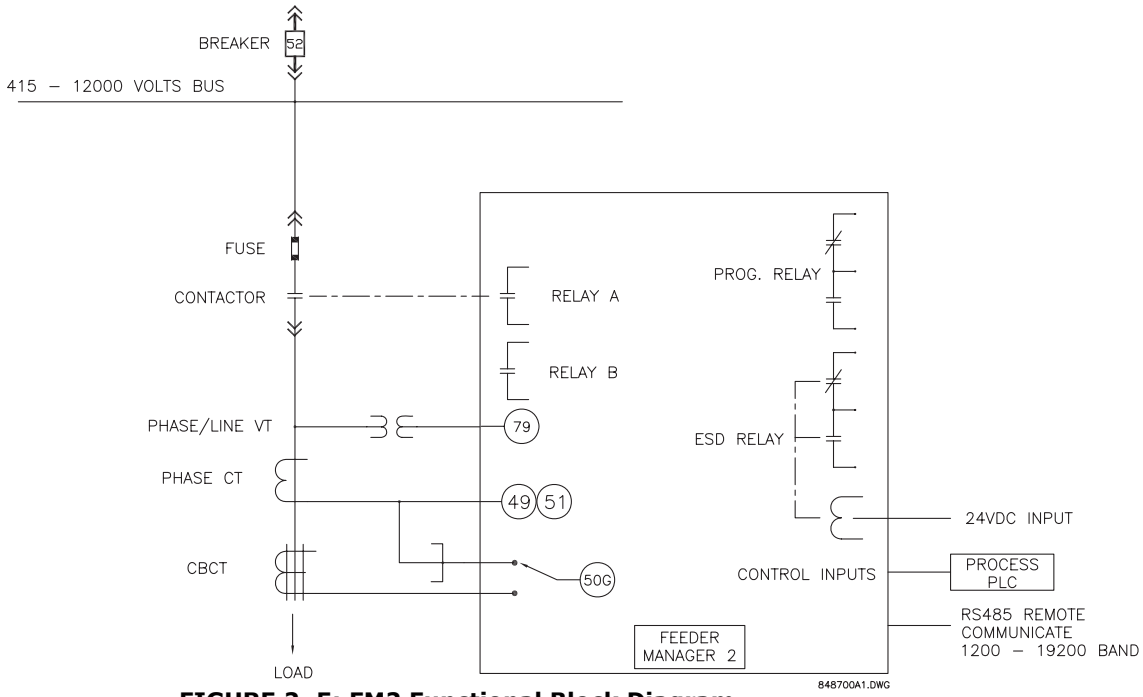


**FIGURE 2–5: FM2 Functional Block Diagram**

# Inputs and Outputs

### Phase CT Inputs

Both 5 A and 1 A current transformer secondaries are accommodated by the FM2. Each phase current input to the FM2 has 3 terminals: 5 A input, 1 A input, and the common input. For example, if the phase CTs are 200:5, connect phase R, Y, and B CT secondaries to terminals 1/3, 4/6, and 7/9, respectively. For load currents up to 10 A, the phase conductors can be directly connected to the FM2 with no phase CTs required providing that the voltage at the CT terminals does not exceed 600 V RMS.

CTs should be selected to be capable of supplying the required current to the total secondary load which includes the FM2 relay burden of 0.1 VA at rated secondary current and the connection wiring burden. The CT must not saturate under maximum current conditions which can be up to 8 times for a motor feeder (i.e. motor starting current can be 8 times motor full-load current).

### Earth Fault CT Input

The earth fault CT has a 5 A input, a 50:0.025 input, and a common input. The 5 A input on the earth fault CT is used for 5 A secondary CTs or for residual connection of phase CTs. Residual earth fault protection provides a sensitivity of 10% of feeder Phase CT Primary. The 50:0.025 core balance (zero-sequence) CT input can be used for improved sensitivity when measuring the earth fault current.

NOTE

Care must be taken when turning ON the Earth Fault Trip feature. If the interrupting device (contactor or circuit breaker) is not rated to break earth fault current (low resistance or solidly earthed systems), the feature should be disabled. The 50:0.025 CT input is only recommended to be used on resistance earthed systems. Where the system is solidly earthed or high levels of current are to be detected use the 5 A earth fault input.

### Supply Voltage

A supply voltage of 120/240 V AC, 50 or 60 Hz, is required to power the FM2. The label on the back of the unit will specify the voltage which has been internally set inside the FM2. To change the voltage setting, open the sliding door on the back of

the FM2 and locate the supply voltage selector slide switch. The selector slide switch has a label affixed to show the 120/240 V AC positions. Set the slide switch to the desired voltage.

WARNING

**Set the supply voltage slide switch to the desired voltage position before the unit is powered up. Improper setting could cause non-functioning or damage to the relay.**



### Surge Earthing

This is an additional earthing terminal provided for dissipating transient signals and surges. This must be connected by a thick wire or braid to the system earthing for reliable operation.

### External Connections

Signal wiring is to box terminals that can accommodate wire as large as 12 gauge. CT connections are made using #8 screw ring terminals that can accept wire as large as 8 gauge. Consult the *Typical Wiring Diagram* on page 2–3. Other features can be wired as required.

### ESD Coil

The ESD Relay can be externally energised by applying a 24 V DC signal to these terminals. Correct polarity is required (Terminal 21 = +24 V DC, Terminal 22 = 0 V DC). The ESD Relay is not directly operated by the FM2 via the front panel, PC software, or any logic.

### Output Relays

There are up to 4 output relays on the FM2. Contact switching rating for the output relays as well can be found in *Specifications* on page 1–3.

- Relay A (34/35)
- Relay B (32/33)
- Programmable Relay (26/27/28, 29/30/31): field programmable
- ESD Relay (23/24/25): hard-wired 24 V DC coil

### Switch Inputs

All switch inputs are opto-isolated and operate at a voltage of 120 V AC for 712 models and 240 V AC for 722 models. The switch will read closed when 120/240 V AC is applied to the switch terminal. This 120 V AC can be supplied from the switch common terminals (57, 58) or from an external source providing that the source is in phase with the supply voltage of the FM2.

CAUTION

**SWITCH INPUT COMMON TERMINALS 57 AND 58 ARE LIVE 120 V AC.**

### Programmable Switch Inputs

These 10 inputs can be programmed to one of a number of different functions. Some of the available functions are: Setpoint Access, Lockout Reset, Plant Interlock, Auto Close, Remote Permissive, and Test. See the **S3 PROCESS ⇨⇩ CONFIGURABLE INPUTS** page for complete list of available functions.

### Serial Communication Port

A serial port provides communication capabilities to the FM2. Multiple FM2s can be connected together with a 24 AWG stranded, shielded twisted pair with a characteristic impedance of 120 Ω such as Belden 9841 or equivalent. The total length of communications wiring should not exceed 1500 meters. Care should be used when routing the communications wiring to keep away from high power AC lines and other sources of electrical noise.

Correct polarity is essential for the communications port to operate. Terminal 39 ("+") of every FM2 in a serial communication link must be connected together. Similarly, Terminal 40 ("–") of every FM2 must also be connected together. The shield wire must be connected to Terminal 38 (485 SERIAL EARTHING) on every unit in the link to provide a common earthing potential for all units. Each relay should be "daisy chained" to the next one. Avoid star or stub connected configurations if possible to avoid potential communication problems.

A terminating resistor and capacitor network is required to prevent communication errors. Only the last FM2 and the master computer driver should have the terminating network to ensure proper matching. Using terminating resistors and capacitors on all the FM2s would load down the communication network while omitting them at the ends could cause reflections resulting in communication errors.

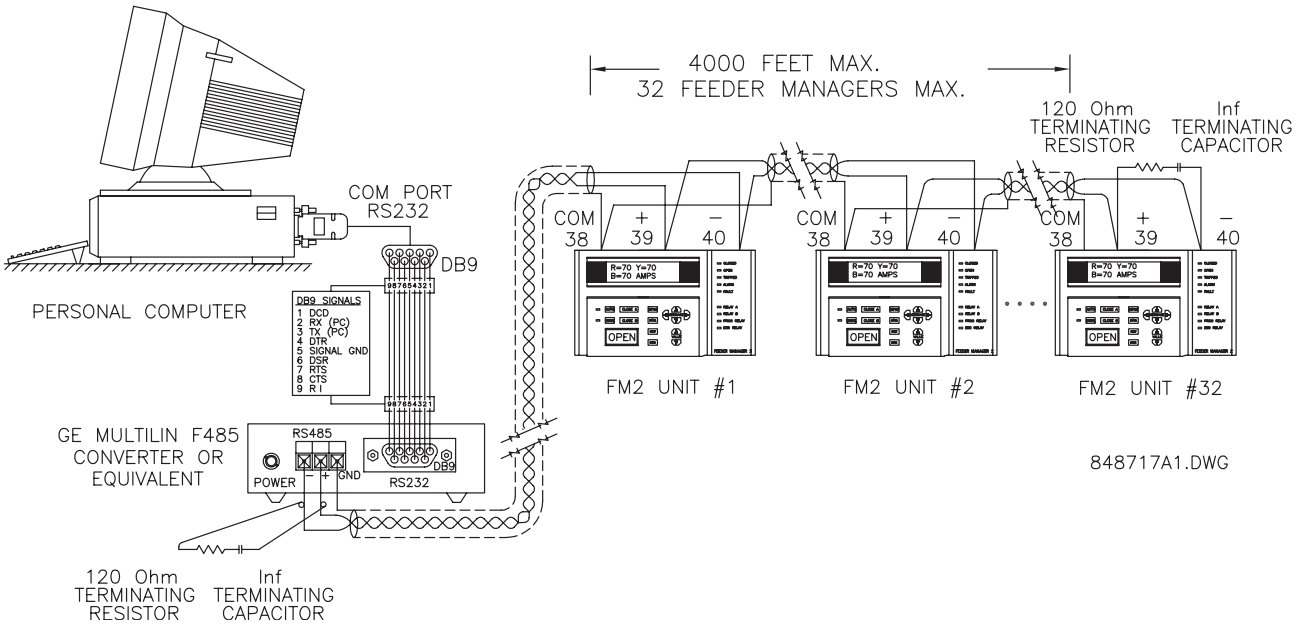


**FIGURE 2–6: RS485 Termination**

**Open** When relay is used for contactor feeder, if this terminal is unhealthy, both output relays will open causing the contactor coils to de-energise. When relay is used for Circuit Breaker applications, if this terminal is de-energised then output relay A will open (if already in closed state) and output relay B will close. The Open input must be energised before the FM2 will process any close commands. Refer to Chapter 9: *Feeder Types* for additional details.

**Close A/B** When relay is used for contactor feeder, either of the relays can be used for the feeder circuit. When the close input terminal is energised, the corresponding output relay will be energised. If relay is used for Circuit Breaker feeder, close B input is ignored and it doesn't perform any operation. Close inputs are usually momentary unless two-wire control is selected. Close A and B may also be initiated via the serial link. Refer to Chapter 9: *Feeder Types* for additional details.

**Test Status N/O** This contact is used when control tests on the contactor/breaker are being performed. When the test switch input is healthy, the statistical counters are not incremented for any contactor/breaker operations.

**Contactor Status** The FM2 **must** know the state of the contactor/breaker at all times in order to detect discrepancies in contactor/breaker close/open commands and also to display the state of the contactor/breaker. There are two contactor status inputs on the FM2, one for contactor A, the other for contactor B.

Auxiliary contacts mechanically linked to the contactor/breaker itself are used to feedback to the contactor status inputs. No status change following a "close" command indicates an open contactor control circuit and no status change following "open" command indicates a welded contactor. Appropriate messages and alarms are displayed for these conditions and the status can be read via the serial port.

If the feeder contactor is externally energised, the FM2 will seal in the output relay and display an "EXTERNAL CLOSE" message. If the feeder contactor is externally de-energised, the FM2 will drop out the output relay and display an "EXTERNAL OPEN" message. Refer to *Circuit Breaker Feeder* on page 9–4 for additional details.

### Switch Common

These two terminals serve as the common for all switches. The FM2 switch inputs operate at 120 VAC which is supplied from these terminals (for the FM2-722 models, external 240 V is required to energise the switch inputs).

### Dielectric Strength Testing

It may be required to test a complete PCC with FM2s installed for dielectric strength. This is also known as "flash" or "hi-pot" testing. The FM2 is rated for 1500 V AC for 1 minute or 1800 V AC for 1 second isolation between switch inputs, relay outputs, VT voltage input, supply voltage inputs and earth terminal 13.

When performing dielectric tests, the connection to the surge earthing terminal (14) must be removed. A filter network is used on the AC input to filter out RF and EMI noise. The filter capacitors and transient absorbers could be damaged by the high voltages relative to earth surge on the AC input.




**Under no circumstances should any inputs other than switches, relays, supply voltage, VT input, and CT inputs be dielectric tested.**




# 3 Hardware



## Faceplate Functions

### Description

Once the FM2 has been wired and powered on, it is ready to be programmed for a specific application. Local programming is done using the front panel keypad and the 40 character alphanumeric display. Remote programming via the serial port is also possible using the EnerVista FM2 Setup software.

### Message Display

A 40-character display is used to communicate all information about the system to the user. Trip and alarm messages will automatically override the currently-displayed message. If no key is pressed for 2 minutes, a user-selected default message will be displayed. If the feeder is currently open, the Feeder Status message will be the default message. Once the feeder is closed, the user-selected message will appear.

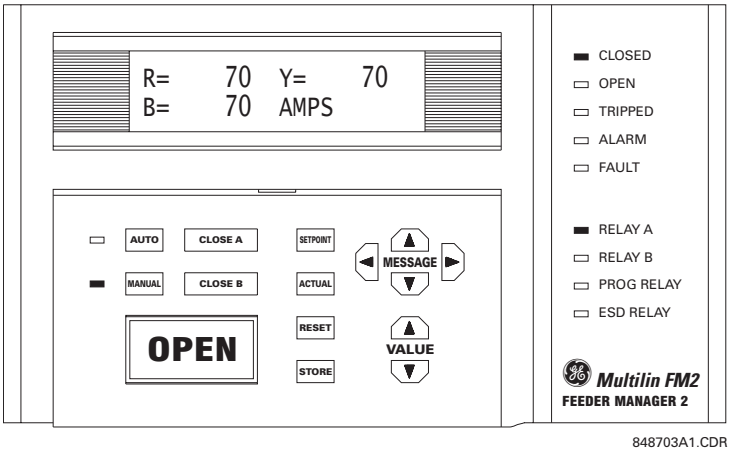


848703A1.CDR

**FIGURE 3–1: Front Panel**

### Indicator LEDs

- **CLOSED**: The CLOSED indicator will be on when the following occurs:
  - For a contactor feeder: whenever the output relays A or B are closed and the contactor status inputs acknowledge the correct state.
  - For a circuit breaker feeder: whenever output relay A is closed and the contactor A status input acknowledges the correct state.

  Current flow does not affect the indicator for feeder status, only contactor status is monitored for the feeder status.

- **OPEN**: The OPEN indicator will be ON when the following occurs:
  - For a contactor feeder: if both the Contactor Status A and Contactor Status B inputs are unhealthy.
  - For a circuit breaker feeder: if the Contactor Status A input is unhealthy
- **TRIPPED**: If a trip condition causes the output relays to de-energise, this indicator will glow. As long as this indicator is on, the feeder cannot be closed. It is cleared using the reset key, lockout reset facility or serial port reset, dependent on the type of trip.
- **ALARM**: If an alarm condition is present this indicator will be ON. Use the **A2 ALARM DATA** actual values to view current alarm status.
- **FAULT**: If an internal fault within the FM2 is detected by self-checking, this indicator will be on. The FM2 must be replaced or repaired.
- **RELAY A**: If Output Relay A is energised, this indicator will be ON.
- **RELAY B**: If Output Relay B is energised, this indicator will be ON.
- **PROG RELAY**: If the Programmable Relay is ON, this indicator will be ON.
- **ESD RELAY**: If the ESD Relay is ON, this indicator will be ON.
- **AUTO**: If the FM2 is in Auto control mode or the Hard-Wired Auto mode, this indicator will be ON. In Auto mode the Close A / Close B switch inputs and CLOSE A/B keys are non-operational but serial port close commands are operational. In the Hard-wired Auto Mode, the Auto Close A and Auto Close B switch inputs are functional in conjunction with the Auto Permissive switch input. Serial, faceplate and remote closes are disabled. OPEN commands from any location are always operational.
- **MANUAL**: If the FM2 is in Manual control mode, this indicator will be on. In Manual mode the Close A / Close B switch inputs and CLOSE A / CLOSE B keys are operational but serial port close commands are ignored. All open commands are operational.

# Keypad

### Setpoints Key

The SETPOINT key allows the user to examine and alter all trip, alarm, and other FM2 setpoints. There are 6 pages of setpoints: configuration, protection, process, control, monitoring, and factory data.

This key displays the beginning of the next page of setpoints data. If actual values data is displayed while pressing the SETPOINT key, setpoints page S1 will appear:

```
■ SETPOINTS
■ S1 CONFIGURATION
```

This key can be pressed at any time to view FM2 setpoints. To scroll through the setpoint pages, press the SETPOINT key. To go from section to section within a page, press the MESSAGE UP / DOWN keys. To go from line to line within a section, press the MESSAGE LEFT / RIGHT keys.

To alter a setpoint, the VALUE UP / DOWN keys can be used. All setpoints can be incremented or decremented to pre-determined limits. When the desired value is reached, the STORE key must be used to save the new setpoint. If an altered setpoint is not stored, the previous value will still be in effect. All control and protection features continue to operate while setpoints data is displayed.

### Actual Values Key

The ACTUAL key allows the user to examine all of the actual feeder operating parameters. There are 4 pages of actual values data: data, status, inputs, and statistics.

This key displays the beginning of the next page of actual values. If setpoints data is displayed while pressing the ACTUAL key, page A1 of actual values will be shown:

```
■ ACTUAL VALUES
■ A1 DATA
```

This key can be pressed at any time to view FM2 actual values. To scroll through the actual values pages, press the ACTUAL key. To go from section to section within a page, press the MESSAGE UP / DOWN keys. To go from line to line within a section, press the MESSAGE LEFT / RIGHT keys.

The VALUE UP / DOWN keys have no effect when actual values data is displayed.

**Store Key**

The STORE key allows the user to store new setpoints into the FM2 internal memory.

When this key is pressed the currently displayed setpoint will be stored in non-volatile memory and will immediately come into effect. When a Setpoint is stored, the following flash message will appear on the display:

```
NEW SETPOINT
STORED
```

The STORE key can be used only in setpoints mode to store new setpoints, or in actual values mode to select a new default message.

**Open Key**

The OPEN key will allow the user to open the breaker/contactor from the faceplate of the FM2. Pressing this key has the following effects:

- For contactor feeders: output relays A and B will de-energise, therefore dropping out the feeder contactor.
- For circuit breaker feeders: output relay B will energise, therefore tripping the feeder breaker.

The OPEN key is used to open the feeder circuit.

**Reset Key**

The RESET key allows the user to reset FM2 trips. Pressing this key will reset a tripped state on the FM2. A message indicating that a reset is not possible will be displayed if the condition causing the trip is still present.

The RESET key can be used to reset all trip conditions from the faceplate of the FM2, except for earth faults or thermal overloads. A Thermal Overload Trip can be assigned to the Lockout Reset feature on one of the programmable switch inputs for added safety. The factory default does not allow for the resetting of lockout trips using the front panel reset key.

**Close A Key**

The CLOSE A key can be used to close the feeder contactor/breaker. Pressing this key will cause Relay A to close.

The CLOSE A key is used to close the feeder/contactor from the faceplate of the FM2. Close A can also be initiated from the close switch inputs at the back of the FM2 or from the serial port.

**Close B Key**

The CLOSE B key can be used to close Relay B. For a contactor feeder, pressing this key will cause Relay B to close.

The CLOSE B key is used if Relay B is used to control the feeder contactor. It is used to close the feeder contactor from the faceplate of the FM2. Close B can also be initiated from the close switch input at the back of the FM2 or from the serial port.

**Message Up/Down Keys**

The MESSAGE UP / DOWN keys allow the user to move to the next or previous section of the currently selected page.

Pressing the MESSAGE DOWN key will cause the display to move to the next section of the current page. Pressing the MESSAGE UP key will cause the display to move to the previous section of the current page. Note: If either key is held for more than 1 sec-

ond, the next or previous sections will be selected at a fast rate. When the current display is at a page heading, the MESSAGE UP key has no effect. When the current display is at the end of the page, the MESSAGE DOWN key has no effect.

These keys are used to move through the sections of the currently selected page.

### Message Left/Right Keys

The MESSAGE LEFT / RIGHT keys allow the user to scan the next or previous line of the currently selected section.

Pressing the MESSAGE RIGHT key displays the next line of the current section. Pressing the MESSAGE LEFT key displays the previous line of the current section. If either key is held for more than 1 second, the next or previous line will be selected at a faster rate. If the display shows a section heading, the MESSAGE LEFT key has no effect. If the message right key has no effect, the display is showing the last line of a section.

These keys are used to move through the lines of the currently selected section.



### Value Up/Down Keys

The VALUE UP / DOWN keys allow the user to change setpoint values prior to pressing the STORE key.

Pressing the VALUE UP key will increment the currently displayed setpoint value. Pressing the VALUE DOWN key will decrement the currently displayed setpoint value. If the display shows an actual value, these keys will have no effect

These keys can be used any time to change the value of setpoint messages.

### Auto/Manual Keys

The AUTO/MANUAL keys allow the user to toggle between the auto and manual mode of operation.




# 4 Software

## Introduction

### Overview

Although setpoints can be manually entered using the front panel keys, it is far more efficient and easier to use a computer to download values through the communications port. The no-charge EnerVista FM2 Setup software included with the FM2 makes this a quick and convenient process. With the EnerVista FM2 Setup software running on your PC, it is possible to:

- Program and modify setpoints
- Load/save setpoint files from/to disk
- Read actual values and monitor status
- Log data (trending)
- Get help on any topic

The EnerVista FM2 Setup software allows immediate access to all the features of the FM2 through pull-down menus in the familiar Windows environment. The software can also run without a FM2 connected. This allows you to edit and save setpoint files for later use. If a FM2 is connected to a serial port on a computer and communication is enabled, the FM2 can be programmed from the setpoint screens. In addition, measured values, status and alarm messages can be displayed with the actual screens.

### Hardware

Communications from the EnerVista FM2 Setup software to the FM2 can be accomplished two ways: RS485 and Ethernet (requires the MultiNET adapter). The following figure illustrates typical connections for RS485 communications. For details on Ethernet communications, please see the MultiNET manual.

## Installing the EnerVista FM2 Setup software

The following minimum requirements must be met for the EnerVista FM2 Setup software to operate on your computer.

- Microsoft Windows 95 or higher operating system
- 64 MB of RAM (256 MB recommended)
- Minimum of 50 MB hard disk space (200 MB recommended)

After ensuring these minimum requirements, use the following procedure to install the EnerVista FM2 Setup software from the enclosed GE EnerVista CD.

1. Insert the GE EnerVista CD into your CD-ROM drive.
2. Click the **Install Now** button and follow the installation instructions to install the no-charge EnerVista software on the local PC.
3. When installation is complete, start the EnerVista Launchpad application.
4. Click the **IED Setup** section of the **Launch Pad** window.




5. In the EnerVista Launch Pad window, click the **Add Product** button and select the "FM2 Feeder Manager 2" from the Add Product window as shown below. Select the "Web" option to ensure the most recent software release, or select "CD" if you do not have a web connection, then click the **Check Now** button to list software items for the FM2.

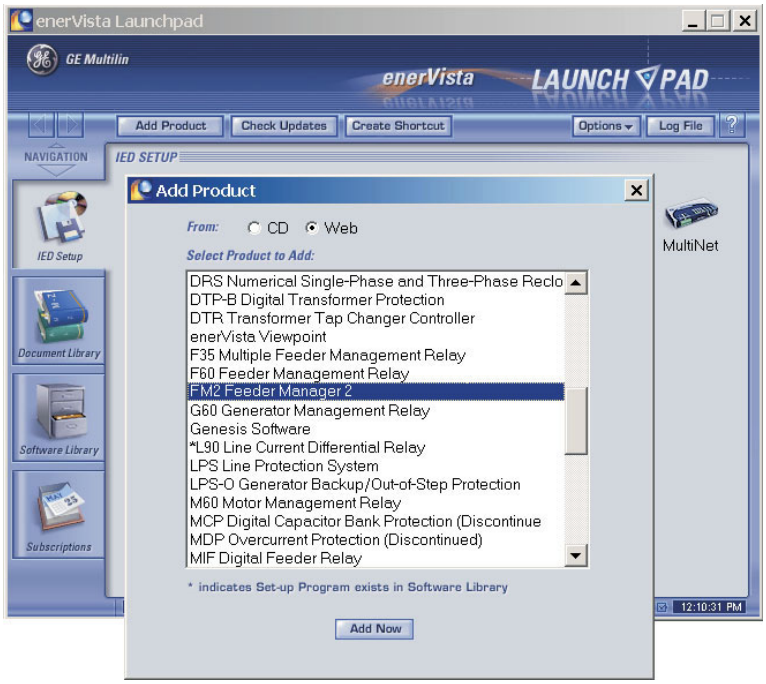


6. EnerVista Launchpad will obtain the installation program from the Web or CD. Once the download is complete, double-click the installation program to install the EnerVista FM2 Setup software.

7. The program will request the user to create a backup 3.5" floppy-disk set. If this is desired, click on the **Start Copying** button; otherwise, click on the **CONTINUE WITH FM2 VERSION 1.00 INSTALLATION** button.
8. Select the complete path, including the new directory name, where the EnerVista FM2 Setup software will be installed.
9. Click on **Next** to begin the installation. The files will be installed in the directory indicated and the installation program will automatically create icons and add EnerVista FM2 Setup software to the Windows start menu.
10. Click **Finish** to end the installation. The FM2 device will be added to the list of installed IEDs in the EnerVista Launchpad window, as shown below.

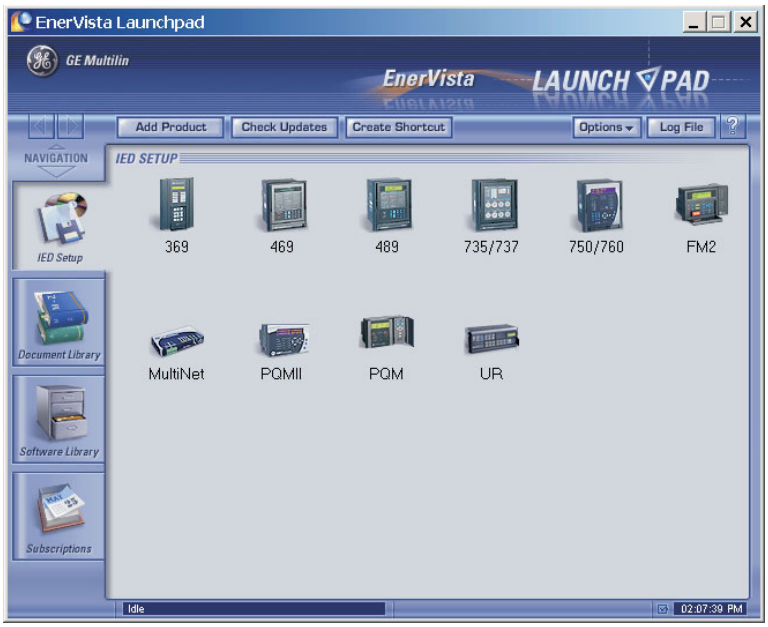


# Configuring Serial Communications

## Description

Before starting, verify that the serial cable is properly connected to the RS485 terminals on the back of the device. See *Hardware* on page 4–1 for connection details.

1. Install and start the latest version of the EnerVista FM2 Setup software (available from the GE EnerVista CD). See the previous section for the installation procedure.
2. Click on the **Device Setup** button to open the Device Setup window and click the **Add Site** button to define a new site.
3. Enter the desired site name in the **Site Name** field. If desired, a short description of site can also be entered along with the display order of devices defined for the site. Click the **OK** button when complete.
4. The new site will appear in the upper-left list in the EnerVista FM2 Setup software window.
5. Click the **Add Device** button to define the new device.
6. Enter the desired name in the **Device Name** field and a description (optional) of the site.
7. Select "Serial" from the Interface drop-down list. This will display a number of interface parameters that must be entered for proper RS232 functionality.

Enter the relay slave address and COM port values (from the **S1 FM2 CONFIGURATION ⇨⇩ COMMUNICATIONS** setpoints menu) in the Slave Address and COM Port fields.

Enter the physical communications parameters (baud rate and parity settings) in their respective fields.

8. Click the **Read Order Code** button to connect to the FM2 device and upload the order code. If an communications error occurs, ensure that the FM2 serial communications values entered in the previous step correspond to the relay setting values.
9. Click **OK** when the relay order code has been received. The new device will be added to the Site List window (or Online window) located in the top left corner of the main EnerVista FM2 Setup software window.
10. The FM2 Site Device has now been configured for serial communications.

# Using the EnerVista FM2 Setup software



## Entering Setpoints

The System Setup page will be used as an example to illustrate the entering of setpoints.

1. Select the **Setpoint > S1 Configuration > CT/VT Inputs** menu item. The following window will appear:

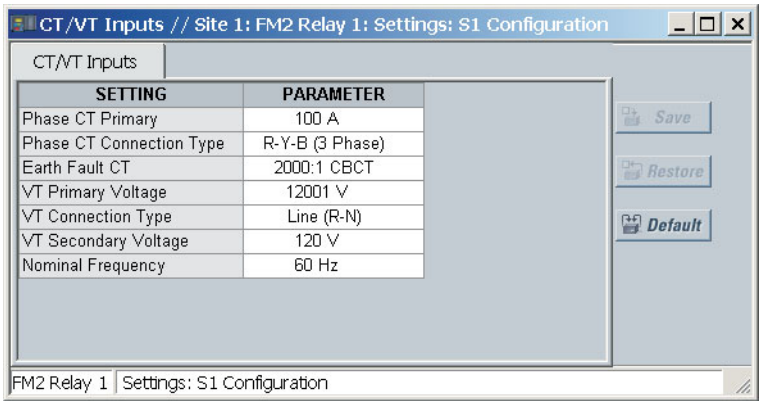


2. When a non-numeric setpoint such as **PHASE CT CONNECTION TYPE** is selected, the EnerVista FM2 Setup software displays a drop-down menu:

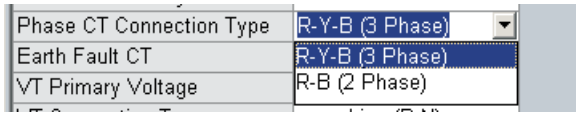


3. When a numeric setpoint such as **PHASE CT PRIMARY** is selected, EnerVista FM2 Setup software displays a keypad that allows the user to enter a value within the setpoint range displayed near the top of the keypad:

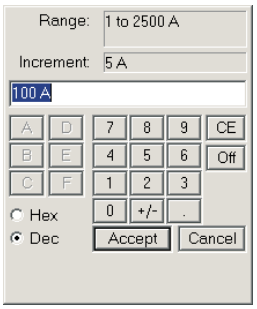

Click **Accept** to exit from the keypad and keep the new value. Click on **Cancel** to exit from the keypad and retain the old value.

4. In the Setpoint / System Setup dialog box, click on **Store** to save the values into the FM2. Click **OK** to accept any changes and exit the window. Click **Cancel** to retain previous values and exit.

### Saving Setpoints To A File

It is important to save the current FM2 settings to a file on your PC. After the firmware has been upgraded, it may be required to load this file back into the FM2.

1. To save setpoints to a file, select the **File > Read Device Settings** menu item.
2. The EnerVista FM2 Setup software will read the device settings and prompt the user to save the setpoints file. Select an appropriate name and location for the setpoint file and click **OK**.
3. The saved file will be added to the "Files" pane of the EnerVista FM2 Setup software main window.

### Loading Saved Setpoints

1. Select the previously saved setpoints file from the File pane of the EnerVista FM2 Setup software main window.
2. Select the setpoint file to be loaded into the FM2 and click **OK**.
3. Select the **File > Edit Settings File Properties** menu item and change the file version of the setpoint file to match the firmware version of the FM2.
4. With the updated setpoint file selected in the File pane, select the **File > Write Settings to Device** menu item and select the target FM2 to receive the previously saved settings file.
5. A dialog box will appear to confirm the request to download setpoints. Click **Yes** to send the setpoints to the FM2 or **No** to end the process.

### Viewing Actual Values

If a FM2 is connected to a computer via the serial port, any measured value, status and alarm information can be displayed. Use the Actual pull-down menu to select various measured value screens. Monitored values will be displayed and continuously updated.

### Setpoint Files

To print and save all the setpoints to a file follow the steps outlined in *Saving Setpoints To A File* on page 4–5.

To load an existing setpoints file to a FM2 and/or send the setpoints to the FM2 follow the steps outlined in *Loading Saved Setpoints* on page 4–5.

### Getting Help

A detailed Help file is included with the EnerVista FM2 Setup software.

Select the **Help > Contents** menu item to obtain an explanation of any feature, specifications, setpoint, actual value, etc. Context-sensitive help can also be activated by clicking on the desired function.

For easy reference, any topic can be printed by selecting **File > Print Topic** item from the Help file menu bar.

# Trending

## Description

The trending feature is used to sample and record up to eight actual values at an interval defined by the user. Several parameters can be trended and graphed at sampling periods ranging from 1 second up to 1 hour. The parameters which can be trended by the EnerVista FM2 Setup software are:

- Phase Currents R, Y, and B, and Earth leakage current
- Imbalance phase current %
- VT Primary Voltage, Power (kW), Energy (kWhr)

The following procedure describes the trending function:

1. With the EnerVista FM2 Setup software running and communications established, select the **Actual Values > Trending** menu item to open the trending window. The following window will appear.

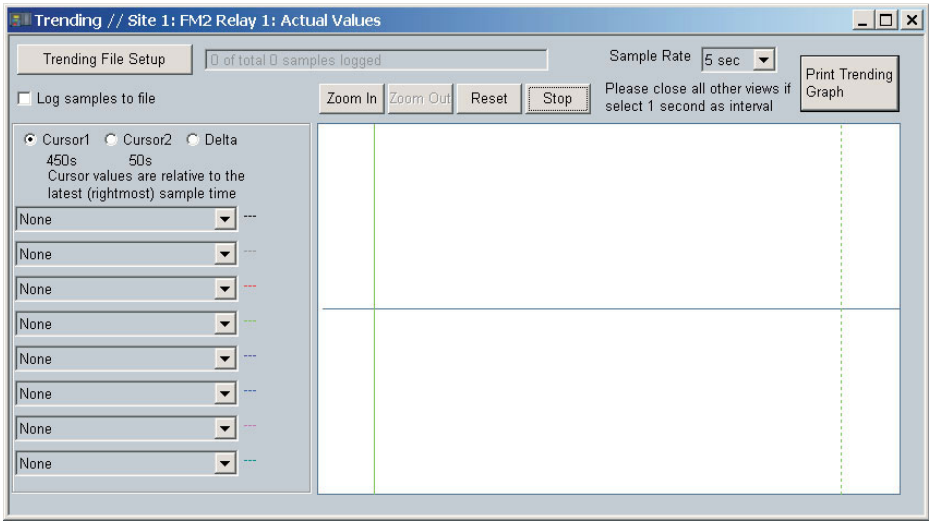


2. To prepare for new trending, select **Stop** to stop the trending and **Reset** to clear the screen.
3. Select the graphs to be displayed through the pull-down menu beside each channel description.
4. Select the Sample Rate through the pull-down menu.
5. To save the information captured by trending, check the box beside **Log Samples to File** or click on **Trending File Setup**. The following dialog box will appear requesting for filename and path. The file is saved as a CSV (comma delimited values) file, which can be viewed and manipulated with compatible third-party software. Ensure that the sample rate not less than 5 seconds; otherwise, some data may not get written to the file.
6. To limit the size of the saved file, enter a number in the **Limit File Capacity To** box. The minimum number of samples is 1000. At a sampling rate of 5 seconds (or 1 sample every 5 seconds), the file will contain data collected during the past 5000 seconds. The EnerVista FM2 Setup software will automatically estimate the size of the trending file.
7. Press **Run** to start the data logger. If the **Log Samples to File** item is selected, the EnerVista FM2 Setup software will begin collecting data at the selected sampling rate and will display it on the screen. The data log will continue until the **Stop** button is pressed or until the selected number of samples is reached, whichever occurs first.

8. During the process of data logging, the trending screen appears as shown below.

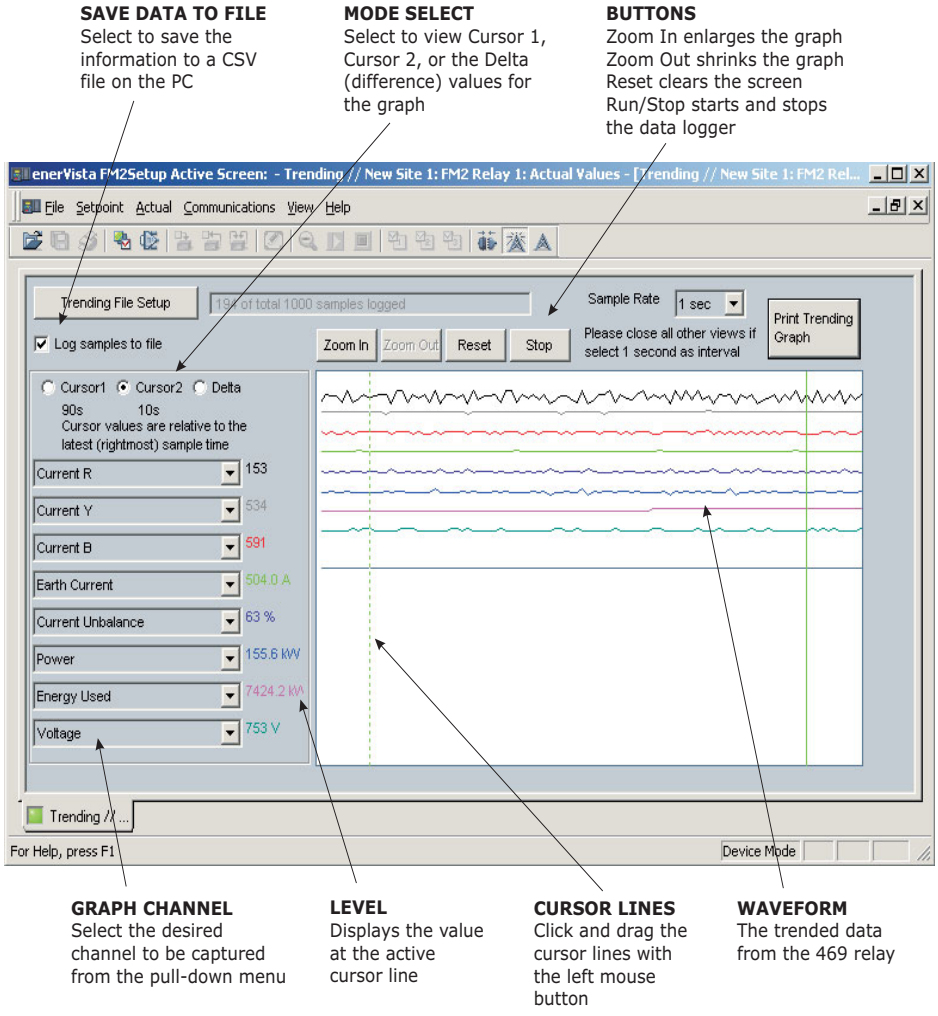


**FIGURE 4–1: Trending Details**

# Upgrading Relay Firmware

## Description

To upgrade the FM2 firmware, follow the procedures listed in this section. Upon successful completion of this procedure, the FM2 will have new firmware installed with the original setpoints.

The latest firmware files are available from the GE Multilin website at http://www.GEmultilin.com.

## Saving Setpoints

Before upgrading firmware, it is very important to save the current FM2 settings to a file on your PC. After the firmware has been upgraded, it will be necessary to load this file back into the FM2.

Refer to *Saving Setpoints To A File* on page 4–5 for details on saving relay setpoints to a file.

## Loading New Firmware

Loading new firmware into the FM2 flash memory is accomplished as follows:

1. Connect the relay to the local PC and save the setpoints to a file as shown in *Saving Setpoints To A File* on page 4–5.
2. Select the **Commands > Update Firmware** menu item.
3. The following warning message will appear. Select **Yes** to proceed or **No** the cancel the process. *Do not proceed unless you have saved the current setpoints*.

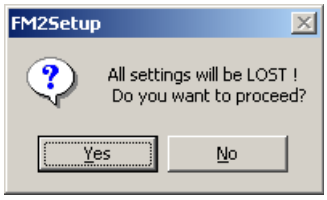


4. The EnerVista FM2 Setup software software will request the new firmware file. Locate the firmware file to load into the FM2. The firmware filename has the following format:

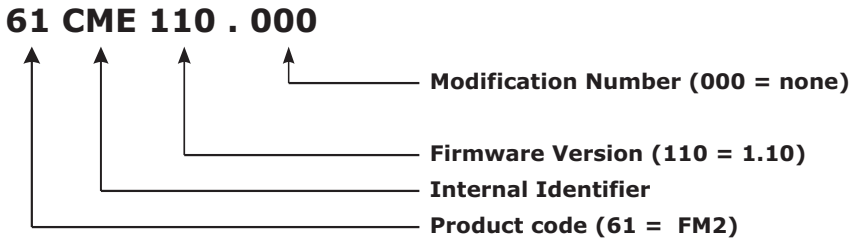


5. The EnerVista FM2 Setup software software automatically lists all filenames beginning with '61'. Select the appropriate file and click **OK** to continue.
6. The software will prompt with another Upload Firmware Warning window. This will be the final chance to cancel the firmware upgrade before the flash memory is erased. Click **Yes** to continue or **No** to cancel the upgrade.
7. The EnerVista FM2 Setup software software now prepares the FM2 to receive the new firmware file. The FM2 will display a message indicating that it is in Upload Mode. While the file is being loaded into the FM2, a status box appears indicating how much of the new firmware file has been transferred and how much is remaining, as well as the upgrade status. The entire transfer process takes approximately five minutes.
8. The EnerVista FM2 Setup software software will notify the user when the FM2 has finished loading the file. Carefully read any displayed messages and click **OK** to return the main screen.




Cycling power to the relay is highly recommended after a firmware upgrade.

After successfully updating the FM2 firmware, the relay will not be in service and will require setpoint programming. To communicate with the relay, the following settings will have to me manually programmed.

**SLAVE ADDRESS**
**BAUD RATE**

When communications is established, the saved setpoints must be reloaded back into the relay. See *Loading Saved Setpoints* on page 4–5 for details.

Modbus addresses assigned to firmware modules, features, settings, and corresponding data items (i.e. default values, minimum/maximum values, data type, and item size) may change slightly from version to version of firmware.

The addresses are rearranged when new features are added or existing features are enhanced or modified. The **EEPROM DATA ERROR** message displayed after upgrading/downgrading the firmware is a resettable, self-test message intended to inform users that the Modbus addresses have changed with the upgraded firmware. This message does not signal any problems when appearing after firmware upgrades.




# 5 Setpoints

## Overview

### Setpoints Main Menu

The FM2 has a considerable number of programmable setpoints. These setpoints are grouped into six main pages with corresponding sub-pages as shown below. Each sub-page of setpoints (e.g. **S1 CONFIGURATION ⇩ COMMUNICATIONS**) has corresponding manual section which describes in detail the setpoints found on that page.

| | | | |
|---|---|---|---|
| ■ SETPOINTS<br>■ S1 CONFIGURATION | ⇩ | ■ COMMUNICATIONS<br>■ | See page 5–3. |
| MESSAGE | ⇩⇧ | ■ FEEDER<br>■ IDENTIFICATION | See page 5–4. |
| MESSAGE | ⇩⇧ | ■ FEEDER<br>■ | See page 5–4. |
| MESSAGE | ⇩⇧ | ■ CT/VT INPUTS<br>■ | See page 5–4. |
| MESSAGE | ⇩⇧ | ■ FAULT MODE<br>■ | See page 5–5. |
| MESSAGE | ⇩⇧ | ■ STATISTICS<br>■ | See page 5–5. |
| MESSAGE | ⇧ | END OF PAGE | |

SETPOINT

| | | | |
|---|---|---|---|
| ■ SETPOINTS<br>■ S2 PROTECTION | ⇩ | ■ FEEDER PROTECTION<br>■ THERMAL | See page 5–10. |
| MESSAGE | ⇩⇧ | ■ FEEDER PROTECTION<br>■ EARTH FAULT | See page 5–10. |
| MESSAGE | ⇧ | END OF PAGE | |

SETPOINT

| | | | |
|---|---|---|---|
| ■ SETPOINTS<br>■ S3 PROCESS | ⇩ | ■ CONFIGURABLE INPUTS<br>■ | See page 5–11. |
| MESSAGE | ⇩⇧ | ■ PROCESS INTERLOCK<br>■ NAMES | See page 5–14. |

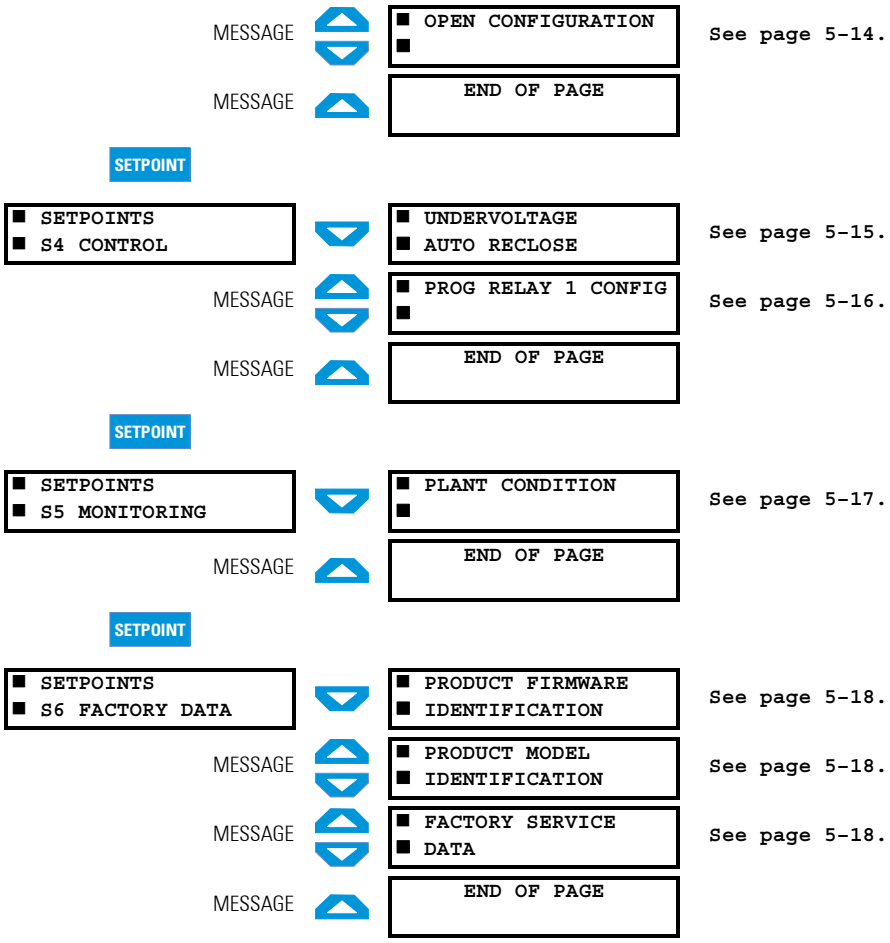




## Overview

By pressing the SETPOINT key, any of the relay setpoints may be viewed or altered. The setpoints are divided into six pages. Information about the feeder configuration and other connected devices is entered in **S1 CONFIGURATION**. Information for programming the protection features is located in **S2 PROTECTION**. Information describing the process control functions is in **S3 PROCESS**. Information for programming the control functions is in **S4 CONTROL**. Information to aid with contactor/breaker maintenance is contained in **S5 MONITORING**. Information about the internal configuration of the FM2 is contained in **S6 FACTORY DATA**.

To scroll through the setpoint pages, press the SETPOINT key. When this key is pressed for the first time the following message will appear on the display:




This is the first page of setpoints. The MESSAGE keys may be used to view all of the setpoints data.

The setpoint values themselves are changed with the VALUE keys. When a setpoint is adjusted to its proper value, the STORE key must be pressed to save the setpoint into non-volatile memory. Once the STORE key is pressed, the following flash message is displayed and the new setpoint value will be permanently saved.

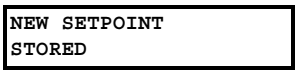

**Setpoints may be changed while the feeder contactor/breaker is closed; however it is not recommended to change important protection parameters without first opening the feeder contactor/breaker.**

Setpoints will remain stored indefinitely in the FM2 internal non-volatile memory even when control power to the unit is removed. Protection parameters are based on the entered data. This data must be complete and accurate for the given system for reliable protection of the feeder.

All setpoint messages shown in this chapter reflect the factory default settings.

### Abbreviations

The following abbreviations are used in the messages in the setpoints pages.

- A, AMPS: Amperes
- CBCT: Core Balance Current Transformer
- COM, COMM, COMMS: Communication
- CT: Current Transformer
- FLC: Full Load Current (Feeder Rating)
- E/F: Earth Fault
- Hz: Hertz
- KOHMS: kΩ
- MAX: Maximum
- MIN: Minimum
- PROG: Programmable
- SEC, s: Seconds
- UV: Undervoltage
- VT: Voltage Transformer



# S1 Configuration

### Communications

**PATH: SETPOINTS ⇩ S1 CONFIGURATION ⇨ COMMUNICATIONS**

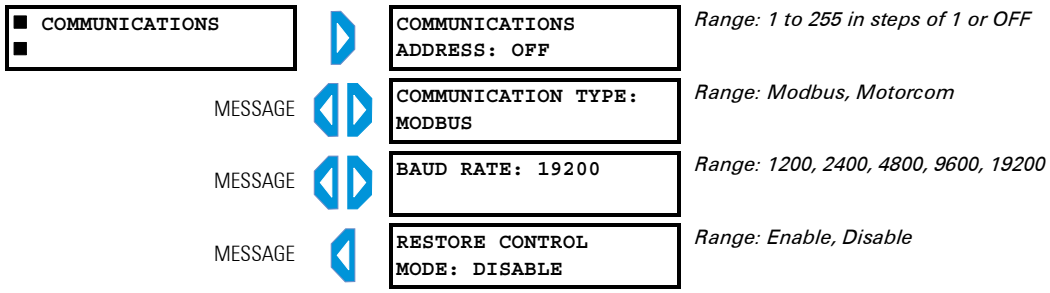


Each FM2 relay on the same serial communication network must have a unique address in the range of 1 to 255. Computer software driving the serial network must be configured to recognise each separate address.

The communications protocol used with the FM2 is selected via the **COMMUNICATIONS TYPE** setpoint. The **BAUD RATE** setpoint selects the data transfer rate for Modbus serial communications. The **RESTORE CONTROL MODE** setpoint overrides a serial 'Local Control Disable' command.

## Feeder Identification

**PATH: SETPOINTS ⇩ S1 CONFIGURATION ⇨⇨ FEEDER IDENTIFICATION**

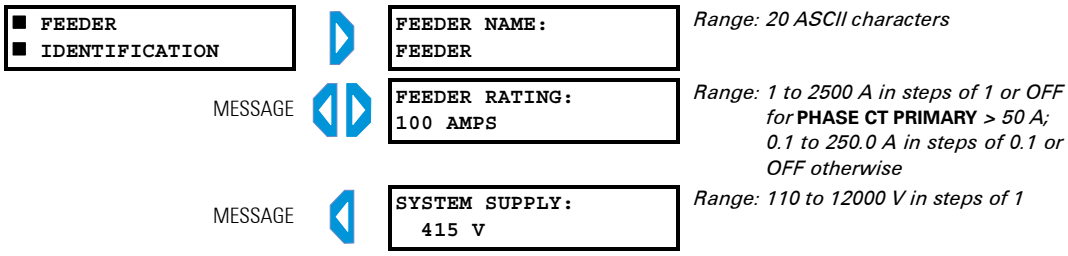


The feeder name that will appear in the **A1 DATA ⇩ FEEDER DATA ⇨ FEEDER STATUS** actual value message is entered via the **FEEDER NAME** setpoint.

Enter the full-load current of the feeder in **FEEDER RATING**. This rating is used for thermal overload and earth fault protection. When configuring through software, a value of 2501 A (or 250.1 A) indicates "OFF".

The **SYSTEM SUPPLY** setpoint indicates the system supply voltage on this line. This setpoint is for reference only and does not affect operation of the FM2 relay.

## Feeder

**PATH: SETPOINTS ⇩ S1 CONFIGURATION ⇨⇨⇨ FEEDER**

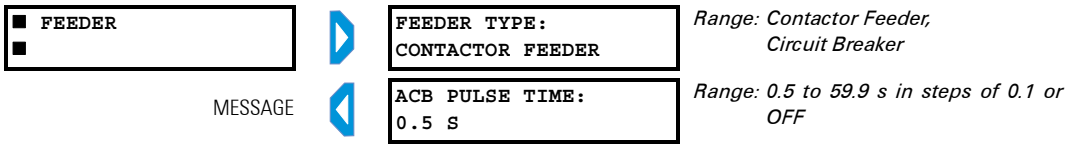


The **FEEDER TYPE** setting selects the type of power switching device used for the feeder. This determines the control logic used for output relay A and B operation. The **ACB PULSE TIME** setpoint is applicable if the **FEEDER TYPE** is selected as "Circuit Breaker". Set the pulse time for breaker close and open commands. Refer to *Feeder Types* on page 9–1 for details on feeder operation.

If the **ACB PULSE TIME** is set to "OFF", a maximum pulse time of 60.0 seconds is set in the relay. When configuring through software, a value of 60.0 s indicates "OFF".

## CT/VT Inputs

**PATH: SETPOINTS ⇩ S1 CONFIGURATION ⇨⇨⇨⇨ CT/VT INPUTS**

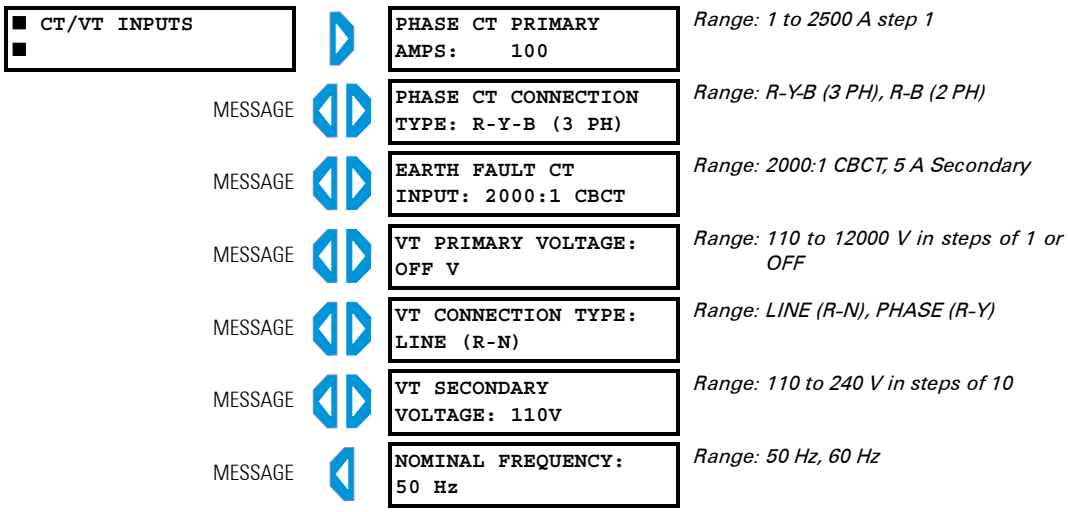


Enter the phase CT rated primary current with **PHASE CT PRIMARY AMPS**. For example, if the phase CTs are rated 500:5, enter "500". The CT secondary must be connected to the correct input, i.e. 1 A or 5 A. Select the **PHASE CT CONNECTION TYPE** as per actual CT connections.

Enter the earth fault sensing CT used for the **EARTH FAULT CT INPUT** setting. This value is either sensitive 2000:1 core-balanced earth fault CT or 5 A Secondary for residual earth fault current sensing from the 5 A phase CT secondaries.

The **VT PRIMARY VOLTAGE** setting enables/disables the voltage/power features and sets VT primary volts. The **VT CONNECTION TYPE** setting appears only if the VT **PRIMARY VOLTAGE** setpoint is not set to "OFF"; enter the VT connection type, either Line R-N ($V_{rn}$) or Phase R-Y ($V_{ry}$). The **VT SECONDARY VOLTAGE** setting appears only if **VT PRIMARY VOLTAGE** is not "OFF". The setting range is 110 to 240 V. When configuring through software, a value of 12001 V for **VT PRIMARY VOLTAGE** indicates "OFF".

Enter the system frequency for the **NOMINAL FREQUENCY** setting.

## Fault Mode

**PATH: SETPOINTS ⇩ S1 CONFIGURATION ⇨⇨⇨⇨⇨ FAULT MODE**

```
■ FAULT MODE
■
```

```
INTERNAL FAULT TRIP:
ENABLE
```

*Range: Enable, Disable*

MESSAGE

```
SERIAL COMM FAILURE
TRIP: OFF s
```

*Range: 5 to 25 s in steps of 5 or OFF*

An internal fault during self-checking will cause an alarm. Since operation may be erratic depending on the fault condition, it may be desirable to trip the feeder by setting the **INTERNAL FAULT TRIP** setpoint to "Enable". The FM2 continues to supply the feeder with an internal fault present if set to "Disable".

If using serial communications to control a process with several feeders working together, it may be desirable to shut down the feeder if communication control is lost. When no activity occurs on the communications port for 5 to 25 seconds, the relay will trip if the **SERIAL COMM FAILURE TRIP** setpoint is enabled. When configuring through software, a value of 30 s indicates "OFF".

## Statistics

**PATH: SETPOINTS ⇩ S1 CONFIGURATION ⇨⇨⇨⇨⇨ STATISTICS**

```
■ STATISTICS
■
```

```
CLEAR TIMERS:
DISABLE
```

*Range: ENABLE, DISABLE*

MESSAGE

```
CLEAR COUNTERS:
DISABLE
```

*Range: ENABLE, DISABLE*

MESSAGE

```
CLEAR ENERGY USED:
DISABLE
```

*Range: ENABLE, DISABLE*

Enabling and storing the **CLEAR TIMERS** setpoint clears the operating time, the operating time since last closed, and the opened time timers (see **A4 STATISTICS ⇩ TIMERS**). Enabling and storing the **CLEAR COUNTERS** setpoint clears the number of operations and trip counters values (see **A4 STATISTICS ⇩⇩ COUNTERS**). Enabling and storing the **CLEAR ENERGY USED** setpoint clears the energy used (kWhr) values seen on page **A1 DATA ⇩ FEEDER**.

# S2 Protection

## IEC Overload Curves

The relay offers three standard curves defined in IEC 255-4 and British Standard BS142. These are defined as IEC Curve A, IEC Curve B, and IEC Curve C. The formulas for these curves are:

$$T = M \times \left( \frac{K}{(I/I_{pu})^{E} - 1} \right) \quad \textbf{(EQ 5.1)}$$

where $T$ is the trip time in seconds, $M$ is the curve multiplier, $I$ is the input current, $I_{pickup}$ is the feeder rating, and $K$ and $E$ are constants.

**TABLE 5–1: IEC (BS) Inverse Time Curve Constants**

| IEC (BS) Curve Shape | K | E |
|---|---|---|
| IEC Curve A (BS142) | 0.140 | 0.020 |
| IEC Curve B (BS142) | 13.500 | 1.000 |
| IEC Curve C (BS142) | 80.000 | 2.000 |

**TABLE 5–2: IEC Curve Trip Times (in seconds)**

| Multiplier (TDM) | Current ( $I$ / $I_{pickup}$) | | | | | | | | | |
|---|---|---|---|---|---|---|---|---|---|---|
| | 1.5 | 2.0 | 3.0 | 4.0 | 5.0 | 6.0 | 7.0 | 8.0 | 9.0 | 10.0 |
| **IEC Curve A** | | | | | | | | | | |
| 0.05 | 0.860 | 0.501 | 0.315 | 0.249 | 0.214 | 0.192 | 0.176 | 0.165 | 0.156 | 0.149 |
| 0.10 | 1.719 | 1.003 | 0.630 | 0.498 | 0.428 | 0.384 | 0.353 | 0.330 | 0.312 | 0.297 |
| 0.20 | 3.439 | 2.006 | 1.260 | 0.996 | 0.856 | 0.767 | 0.706 | 0.659 | 0.623 | 0.594 |
| 0.40 | 6.878 | 4.012 | 2.521 | 1.992 | 1.712 | 1.535 | 1.411 | 1.319 | 1.247 | 1.188 |
| 0.60 | 10.317 | 6.017 | 3.781 | 2.988 | 2.568 | 2.302 | 2.117 | 1.978 | 1.870 | 1.782 |
| 0.80 | 13.755 | 8.023 | 5.042 | 3.984 | 3.424 | 3.070 | 2.822 | 2.637 | 2.493 | 2.376 |
| 1.00 | 17.194 | 10.029 | 6.302 | 4.980 | 4.280 | 3.837 | 3.528 | 3.297 | 3.116 | 2.971 |
| **IEC Curve B** | | | | | | | | | | |
| 0.05 | 1.350 | 0.675 | 0.338 | 0.225 | 0.169 | 0.135 | 0.113 | 0.096 | 0.084 | 0.075 |
| 0.10 | 2.700 | 1.350 | 0.675 | 0.450 | 0.338 | 0.270 | 0.225 | 0.193 | 0.169 | 0.150 |
| 0.20 | 5.400 | 2.700 | 1.350 | 0.900 | 0.675 | 0.540 | 0.450 | 0.386 | 0.338 | 0.300 |
| 0.40 | 10.800 | 5.400 | 2.700 | 1.800 | 1.350 | 1.080 | 0.900 | 0.771 | 0.675 | 0.600 |
| 0.60 | 16.200 | 8.100 | 4.050 | 2.700 | 2.025 | 1.620 | 1.350 | 1.157 | 1.013 | 0.900 |
| 0.80 | 21.600 | 10.800 | 5.400 | 3.600 | 2.700 | 2.160 | 1.800 | 1.543 | 1.350 | 1.200 |
| 1.00 | 27.000 | 13.500 | 6.750 | 4.500 | 3.375 | 2.700 | 2.250 | 1.929 | 1.688 | 1.500 |
| **IEC Curve C** | | | | | | | | | | |
| 0.05 | 3.200 | 1.333 | 0.500 | 0.267 | 0.167 | 0.114 | 0.083 | 0.063 | 0.050 | 0.040 |
| 0.10 | 6.400 | 2.667 | 1.000 | 0.533 | 0.333 | 0.229 | 0.167 | 0.127 | 0.100 | 0.081 |
| 0.20 | 12.800 | 5.333 | 2.000 | 1.067 | 0.667 | 0.457 | 0.333 | 0.254 | 0.200 | 0.162 |
| 0.40 | 25.600 | 10.667 | 4.000 | 2.133 | 1.333 | 0.914 | 0.667 | 0.508 | 0.400 | 0.323 |
| 0.60 | 38.400 | 16.000 | 6.000 | 3.200 | 2.000 | 1.371 | 1.000 | 0.762 | 0.600 | 0.485 |
| 0.80 | 51.200 | 21.333 | 8.000 | 4.267 | 2.667 | 1.829 | 1.333 | 1.016 | 0.800 | 0.646 |
| 1.00 | 64.000 | 26.667 | 10.000 | 5.333 | 3.333 | 2.286 | 1.667 | 1.270 | 1.000 | 0.808 |

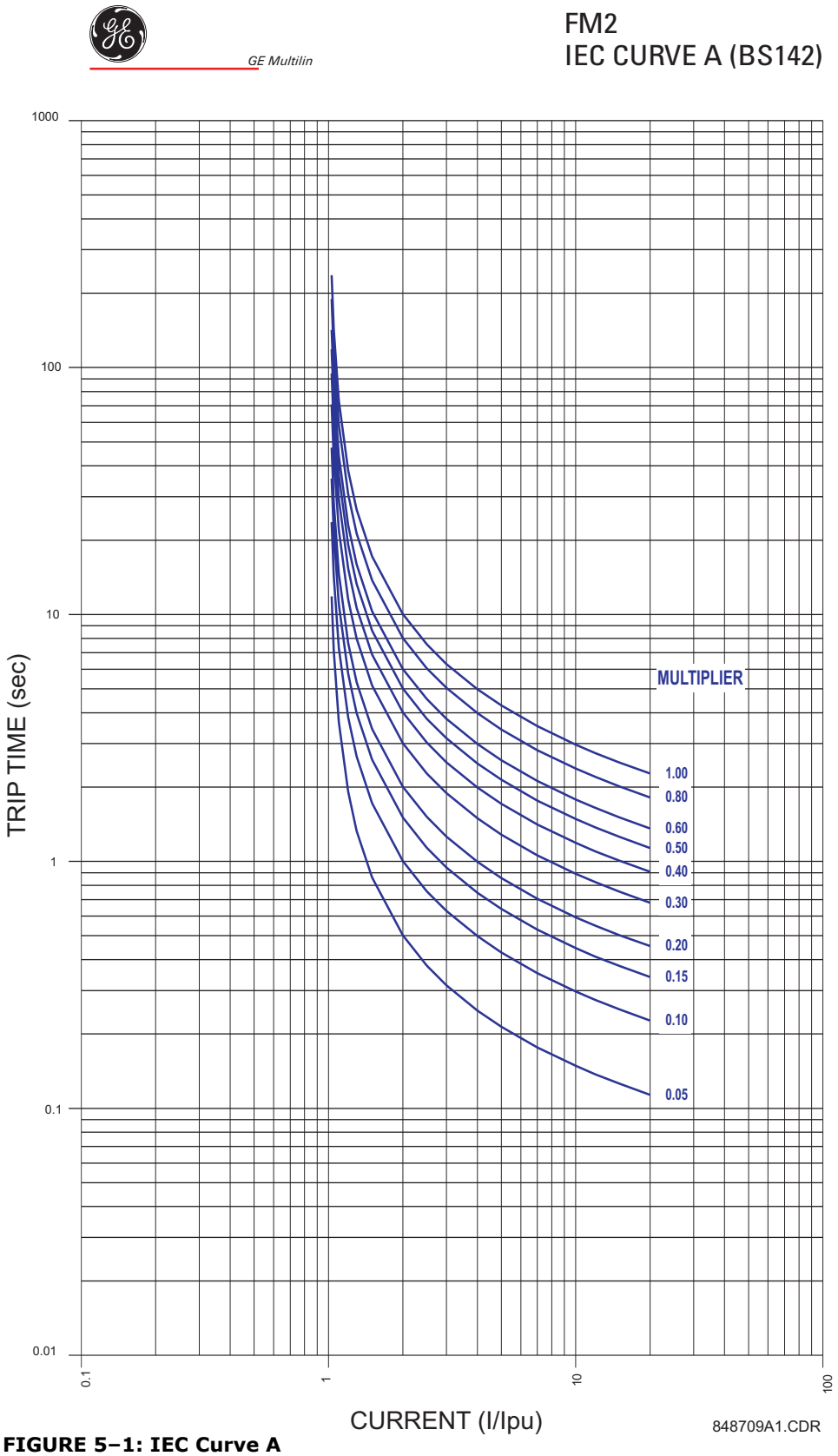


**FIGURE 5–1: IEC Curve A**

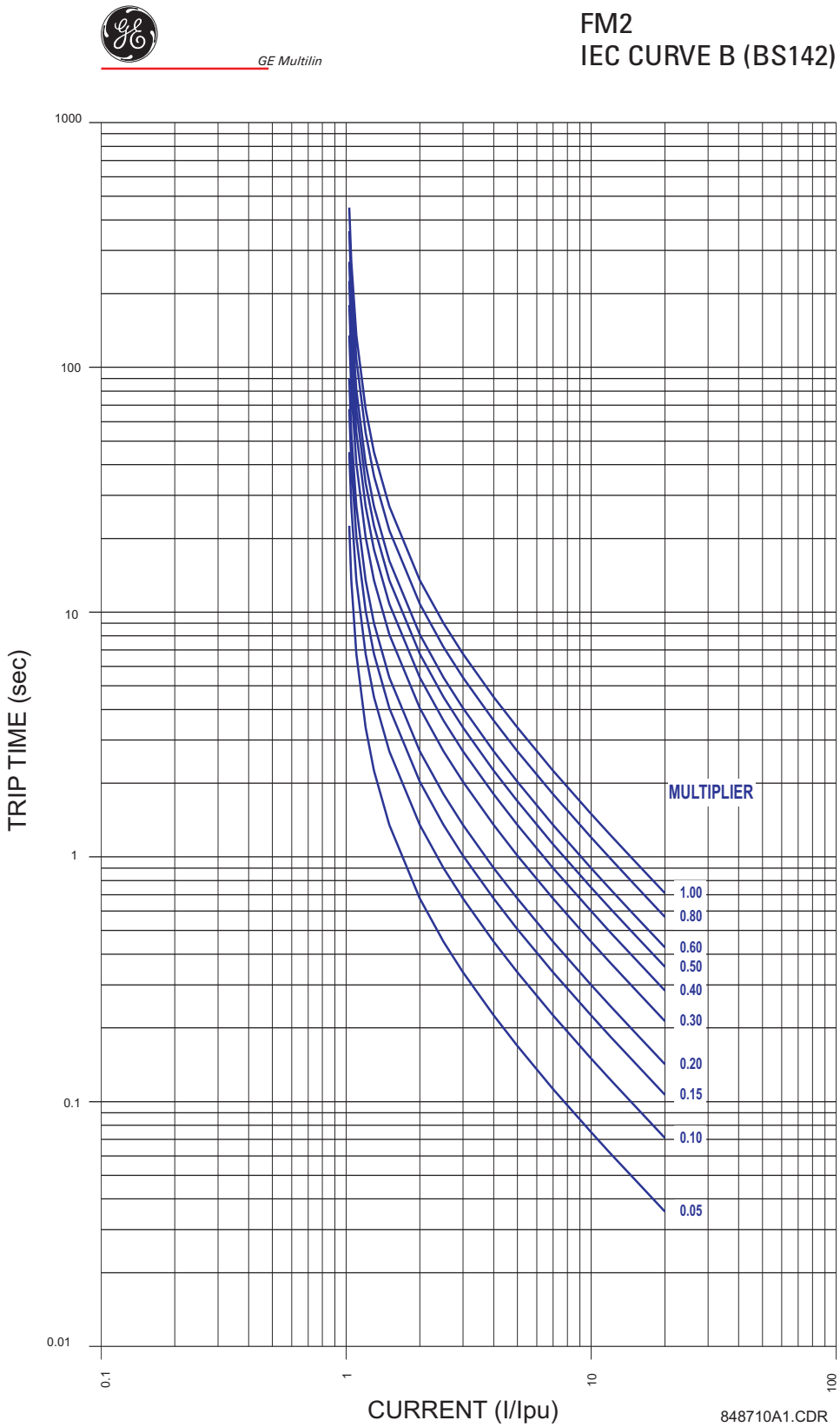


**FIGURE 5–2: IEC Curve B**

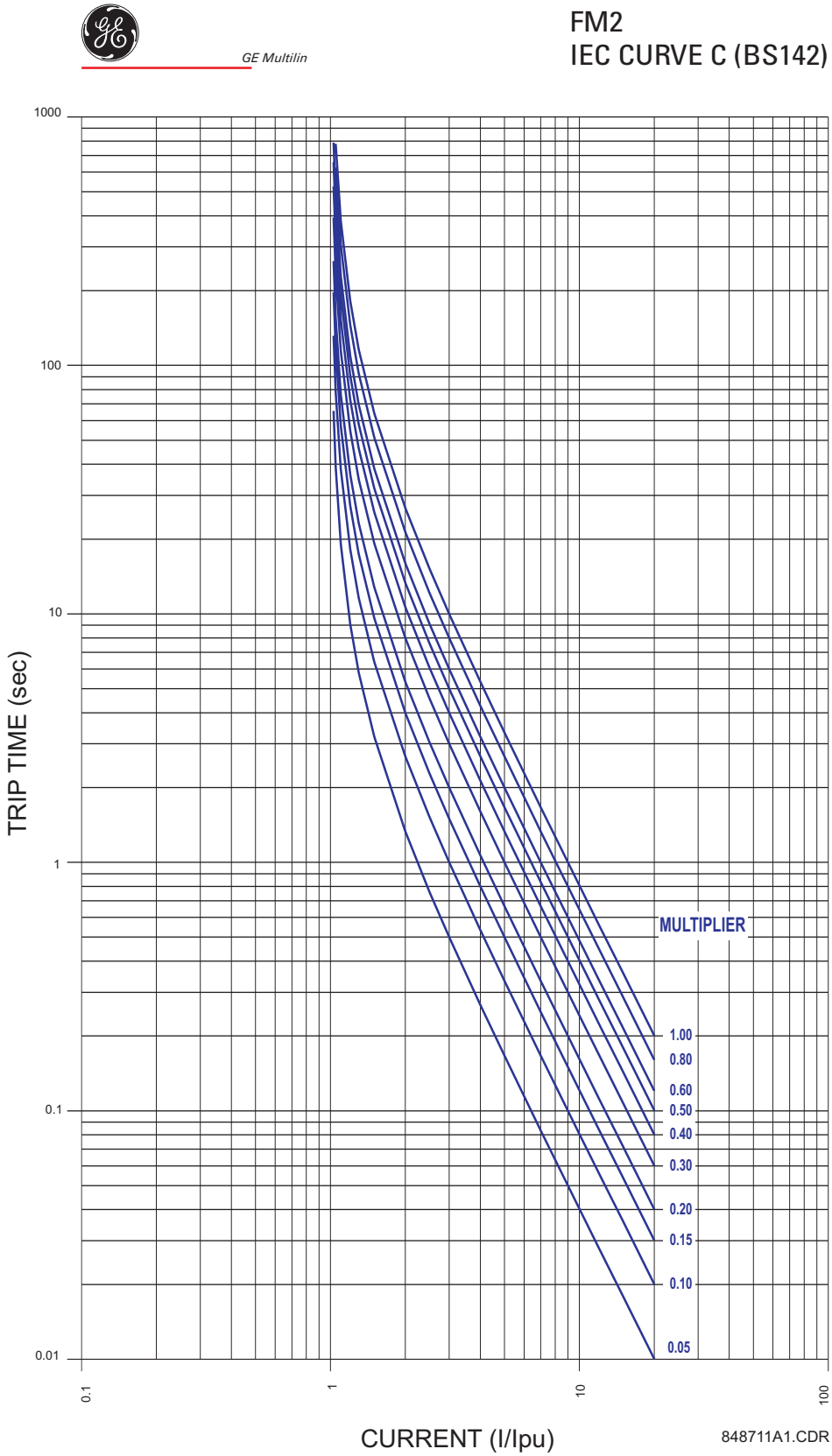


**FIGURE 5–3: IEC Curve C**

## Thermal Protection

PATH: SETPOINTS ⇩⇩ S2 PROTECTION ⇨ FEEDER PROTECTION THERMAL

```
■ FEEDER PROTECTION
■ THERMAL
```

```
OVERLOAD CURVE
NUMBER: OFF
```

*Range: IEC A, IEC B, IEC C, OFF*

MESSAGE

```
CURVE MULTIPLIER:
1.0
```

*Range: 0.5 to 1.0 in steps of 0.1*

Set the **OVERLOAD CURVE NUMBER** to "OFF" to disable the thermal protection function. Select one of the curves to enable the function. Refer to *IEC Overload Curves* on page 5–6 for details on the IEC curves.

This **CURVE MULTIPLIER** setpoint allows shifting of the selected base curve in the vertical time direction. Unlike the electromechanical time dial equivalent, trip times are directly proportional to the value of the time multiplier setpoint. For example, all trip times for a multiplier of 0.5 are 0.5 times the multiplier 1 or base curve values.

## Earth Fault Protection

PATH: SETPOINTS ⇩⇩ S2 PROTECTION ⇨⇨ FEEDER PROTECTION EARTH FAULT

```
■ FEEDER PROTECTION
■ EARTH FAULT
```

```
EARTH FAULT ALARM
LEVEL:  OFF A
```

*Range: 10 to 100% FLC or OFF in steps of 5 or 0.5 to 15.0 A in steps of 0.5 or OFF (see details below)*

MESSAGE

```
EARTH FAULT ALARM
DELAY: 10 s
```

*Range: 1 to 60 s in steps of 1*

MESSAGE

```
EARTH FAULT TRIP
LEVEL:  OFF A
```

*Range: 10 to 100% FLC or OFF in steps of 5 or 0.5 to 15.0 A in steps of 0.5 or OFF (see details below)*

MESSAGE

```
EARTH FAULT TRIP
DELAY: 1.0s
```

*Range: 0.0 to 5.0 s in steps of 0.1*

WARNING

**Care must be taken when turning ON the Earth Fault Trip feature. If the interrupting device (contactor or circuit breaker) is not rated to break earth fault current (low resistance or solidly earthed systems), the feature should be disabled. Alternately, the feature may be assigned to the programmable relay and connected such that it trips an upstream device that is capable of breaking the fault current. Be aware that the FM2 will energise the programmable relay and de-energise relay A at the same time when the earth fault trip occurs. Unless a contactor trip delay setting has been chosen (see PROG RELAY 1 CONFIG for details).**

Set the **EARTH FAULT ALARM LEVEL** to some arbitrary amount below the **EARTH FAULT TRIP LEVEL** to get an early warning of insulation breakdown. For maximum sensitivity, the value selected should be just high enough to prevent nuisance alarms. If the **EARTH FAULT CT INPUT** is set to "5 A Secondary", the level is calculated as a percentage of the **FEEDER RATING** setting; if the **EARTH FAULT CT INPUT** is set to "2000:1 CBCT", the level is calculated in amps. When configuring through software, a value of 101% or 15.5 A for **EARTH FAULT ALARM LEVEL** indicates "OFF".

For residual CT connection, the earth fault trip and alarm levels are set as a percentage of full-load current (feeder rating). For example, given the following:

feeder rating = 250 A
CT primary = 500 A
earth fault alarm level = 25 A
earth fault trip level = 50 A

the relay settings are calculated as shown below.

$$\text{EARTH FAULT ALARM LEVEL} = \frac{25}{\text{feeder rating}} \times 100 = \frac{25}{250} \times 100 = 10\%\ \text{FLC} \quad \textbf{(EQ 5.2)}$$

$$\text{EARTH FAULT TRIP LEVEL} = \frac{50}{\text{feeder rating}} \times 100 = \frac{25}{250} \times 100 = 20\%\ \text{FLC} \quad \textbf{(EQ 5.3)}$$

If the earth current is equal to or above the **EARTH FAULT ALARM LEVEL** setpoint value and remains this way for the time delay programmed in **EARTH FAULT ALARM DELAY**, the alarm relay will activate and the EARTH ALARM message will be displayed.

Some leakage current will always flow between the three phases and earth due to capacitance, insulation, resistance, etc. On resistance limited earth systems, the value selected must be below the maximum resistance limited current that can flow or a trip will never occur. If no optimum value is known, monitor actual leakage current then enter a current somewhat above this value. Earth fault trips at a later time would indicate a deterioration in the system and insulation integrity should be verified. Persistent, high values of leakage current pose a threat to personnel and equipment and should not be left unchecked. If the **EARTH FAULT CT INPUT** is "5 A Secondary", the level is calculated as a percentage of the **FEEDER RATING** setting; if the **EARTH FAULT CT INPUT** is "2000:1 CBCT", the level is calculated in amps.

If the earth fault current is equal to or greater than the **EARTH FAULT TRIP LEVEL** value and remains this way for the **EARTH FAULT TRIP DELAY** time delay, the trip relay will activate and the CAUSE OF TRIP: EARTH FAULT message is displayed.

# S3 Process

## Configurable Inputs

**PATH: SETPOINTS ⇩⇩⇩ S3 PROCESS ⇨ CONFIGURABLE INPUTS**

```
■ CONFIGURABLE INPUTS
■
```

```
INTERLOCK INPUT 1:
NOT USED
```

*Range: Not Used, Process Interlock A to J, Plant Interlock, Lockout Reset, Setpoint Access, Auto Permissive, Auto Close A, Auto Close B, Reset Emergency Open Trip, Two Wire Control, Test, Remote Permissive, Serial Permissive, Open A, Open B, Non-lockout Reset, Local Isolator, Switch Input Monitor*

MESSAGE

```
STARTUP OVERRIDE
DELAY:  0 s  IL1
```

*Range: 0 to 125 s in steps of 1 or OFF*

MESSAGE

```
RUNNING OVERRIDE
DELAY:  0 s
```

*Range: 0 to 125 s in steps of 1 or OFF*

MESSAGE

```
OPERATION:
INTERLOCK STOP
```

*Range: Interlock Stop, Latched Trip*

MESSAGE

```
INSTANTANEOUS ALARM:
DISABLE
```

*Range: Enable, Disable*

MESSAGE

```
TEST MODE:
DISABLE
```

*Range: Enable, Disable*

NOTE

**Interlock input functions are active when the applicable switch input is closed and energised. The first five messages are repeated for all ten interlock outputs.**

The FM2 has 10 configurable switch inputs. Each input can have one of many functions assigned to it. Once a function is assigned to one Interlock input, that function cannot be assigned to any other Interlock input. The Interlock functions are:

- **NOT USED:** This is stored if this Interlock switch input is not used.
- **PROCESS INTERLOCK A(J):** The Process Interlock functions are used to provide time dependent trip/alarm/stop features based on a switch input. This function is used together with the **STARTUP OVERRIDE DELAY**, **RUNNING OVERRIDE DELAY**, **OPERATION**, and **INSTANTANEOUS ALARM** setpoints. The **STARTUP OVERRIDE DELAY** setpoint sets the amount of time that the Process Interlock switch can remain open after the feeder is closed. If the switch remains unhealthy for

longer than this time, a Process Interlock Trip will occur. If the **STARTUP OVERRIDE DELAY** is set to "0", the Process Interlock switch must be healthy in order for the FM2 to allow the feeder to close. If the **STARTUP OVERRIDE DELAY** is set to "OFF" this timer is disabled. The **RUNNING OVERRIDE DELAY** setpoint sets the amount of time that the Process interlock switch can be unhealthy during normal operation. If the Process Interlock switch goes unhealthy after a feeder close and remains unhealthy for longer than the **RUNNING OVERRIDE DELAY**, a Process Interlock Trip will occur. If the **RUNNING OVERRIDE DELAY** is set to "OFF", and the Process Interlock switch goes unhealthy after the feeder is in normal operation, no Process Interlock Trip or Process Interlock Stop will occur. The **OPERATION** setpoint determines whether the Process Interlock feature is a Process Interlock Trip (reset required to reclose the feeder) or a Process Interlock Stop (no reset required). The **INSTANTANEOUS ALARM** setpoint is used to create an alarm whenever the Process Interlock switch is unhealthy. There is no time delay associated with this alarm feature.

When configuring through software, a value of 126 s for the **STARTUP OVERRIDE DELAY** and **RUNNING OVERRIDE DELAY** indicates "OFF".


NOTE

The names of the Process Interlock features can be changed to any 20 ASCII character sequence. See *Process Interlock Names* on page 5–14 for additional details.

- **PLANT INTERLOCK:** This function is used to provide a switch input trip feature. When this switch is unhealthy a Plant Interlock Trip will occur. The Plant Interlock Trip is automatically cleared when the Plant Interlock switch goes healthy.
- **LOCKOUT RESET:** This function is used to provide a separate reset facility for lockout trips (i.e. Thermal Overload and Earth Fault). These trips are considered to be more serious than other FM2 trips. When used, this switch will reset Thermal Overload Trips (regardless of Lockout Time) and Earth Fault Trips only. All other trips must be reset using the RESET key.
- **SETPOINT ACCESS:** This function is used to provide security against unauthorised changing of FM2 setpoints. When this switch is unhealthy setpoints cannot be changed from the FM2 keypad. When this switch is healthy setpoints can be changed from the keypad. If this feature is not used, setpoints can always be changed from the keypad.
- **AUTO PERMISSIVE:** This function is used together with the Auto Close A/B functions. If the Auto Permissive Switch is healthy, close commands can come from the Auto Close A/B switches. When the Auto Permissive Switch is unhealthy the Auto Close A/B switches are ignored. When the Auto Permissive Switch is healthy, close commands via the Close A and B switch inputs and from the faceplate are blocked.
- **AUTO CLOSE A:** This function is used in conjunction with the Auto Permissive function described above. When the Auto Permissive switch is healthy, the Auto Close A switch can be used to close the feeder.
- **AUTO CLOSE B:** This function is used together with the Auto Permissive function. When the Auto Permissive switch is healthy, the Auto Close B switch can be used to close the feeder contactor B in applications where Relay B is used.
- **RESET EMERGENCY OPEN TRIP:** This function is used when a separate Emergency Open Trip Reset switch is required. When this switch is healthy and an Emergency Open Trip is present, the trip will be reset.
- **TWO WIRE CONTROL:** This function is used to switch from normal pulsed three-wire close/open control to maintained two-wire close/open control. For contactor feeders, when this switch is healthy, close commands (Close A/B switch inputs, Auto Close A/B switch inputs) must be maintained in the closed state for the FM2 to keep the feeder contactor closed. When the Close input is opened, the FM2 sees this as an OPEN command and both output relays will open. For a breaker feeder, when this switch is healthy, close commands (Close A switch input, Auto Close switch input) must be maintained in the closed state for the FM2 to keep the breaker feeder closed. When the Close input is opened,

the FM2 sees this as an OPEN command and will open the breaker by closing Relay B.

This is useful in applications with limit switches, PLC control, or Hand/Off/Auto control.

- **TEST:** This function is used to create a Test switch facility. When the Test input is healthy statistical counters (see actual values **A4 STATISTICS ⇨⇨ COUNTERS**) are not incremented. This is used when control tests on the contactor/breaker are being performed and counters should not be updated.

  If the feeder is closed and the switch becomes unhealthy, this function will issue a command to open the feeder.




- **REMOTE PERMISSIVE:** This function provides a means to interlock between the keypad CLOSE keys and the Close A / B switch inputs. When a Remote Permissive switch is not used both of these close command sources will operate when the FM2 is in Manual mode (Manual LED on). If the Remote Permissive switch is healthy, the Close A / B switch inputs are functional but the CLOSE keys are disabled. When the Remote Permissive switch is unhealthy, the CLOSE keys are functional but the Close A / B switch inputs are disabled. Note: Auto mode or Hardwired Auto mode (Auto LED on) disables both the Close A / B switches and the CLOSE keys.
- **OPEN A:** This function is used for end of travel applications. When an interlock configured for Open A opens the corresponding output relay will open. When the Open A input is open the feeder cannot be closed using Close A commands or switch inputs.
- **OPEN B:** This function is used for end of travel applications. When an interlock configured for Open B opens the corresponding output relay will open. When the Open B input is open the feeder cannot be closed using Close B commands or switch inputs.
- **SWITCH INPUT MONITOR**: When assigned, the application of the switch input monitor feature requires an input to be permanently wired closed via a hardware jumper. When the Switch Input Monitor feature is assigned to an Interlock, the FM2 continually reads the switches as it normally would and then checks the switch monitor input to check if it is still healthy. If so, the FM2 updates the switch data with the new switch read and performs any necessary functions. If not, the FM2 assumes the unit is in an undervoltage situation and disregards the switch data until the Switch Input Monitor becomes healthy again. This feature improves the reliability of the Undervoltage Reclose element to successfully close the feeder under very specific voltage dips and durations (approximately 56 to 62% of nominal 100 ms duration).
- **LOCAL ISOLATOR**: The local isolator NO auxiliary contacts are used to prevent feeder closing in the event of the Local Isolator being in the "open" position. To prevent closing, the FM2 produces a trip when the Local Isolator input is open. A Local Isolator Trip is automatically reset when the Local Isolator is reclosed.
- **NON-LOCKOUT RESET**: This function provides a separate reset facility for non-lockout trips (i.e. trips other than Earth Fault and Thermal Overload).
- **SERIAL PERMISSIVE**: This function provides a facility to override the keypad auto/manual keys. When this switch is healthy, the FM2 is forced to the auto serial mode (Auto LED on). When the switch is unhealthy, the FM2 reverts to the mode present before the switch was closed (manual mode with Manual LED on or hand-wired auto mode with Auto LED on).

The **TEST MODE** setting is used with the "TEST" function for interlock inputs. With **TEST MODE** set as "Enabled", the feeder status is changed to test mode. When enabled, the relay will not allow any setting changes from the keypad. To return the relay to normal mode, one of the configurable inputs must be programmed to "Setpoint Access" and should be healthy.

## Process Interlock Names

**PATH: SETPOINTS ⇩⇩⇩ S3 PROCESS ⇨⇨ PROCESS INTERLOCK NAMES**

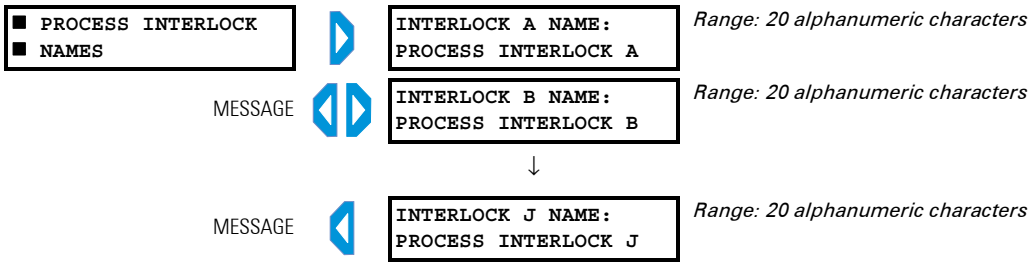


The FM2 allows programming of user-defined names for the process interlock functions. To store a name, use the VALUE keys to change the cursor to the desired letter or number. Press the STORE key. This stores the character and moves the cursor to the next position. Repeat until the entire message has been entered. A space can be used to replace characters if no new character is required. If the cursor is at the end of the message, pressing STORE wraps around to the first position. This message now appears on any actual values message relating to Process Interlock A.

## Open Configuration

**PATH: SETPOINTS ⇩⇩⇩ S3 PROCESS ⇨⇨⇨ OPEN CONFIGURATION**

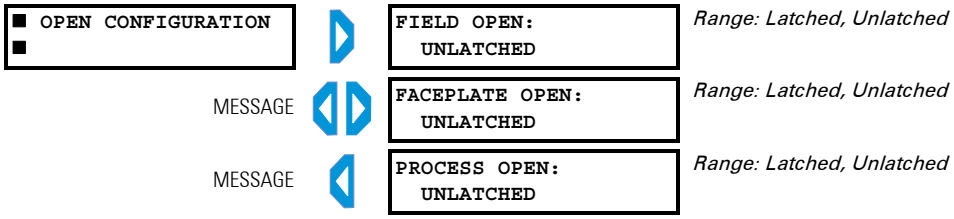


If the FM2 detects that either Contactor Status A or Contactor Status B has become unhealthy without receiving a Open command, an External Open sequence has occurred. If the **FIELD OPEN** setpoint is set to "Unlatched" the **EXTERNAL OPEN** message will be displayed. If the **FIELD OPEN** setpoint is set to "Latched", the FM2 will initiate an Emergency Open Trip. This trip condition must be reset before the feeder can be reclosed.

When the **FACEPLATE OPEN** setpoint is "Latched", pressing the OPEN button causes a latched trip. Pressing RESET allows the feeder to reclose. If the FM2 is receiving a constant close signal, the feeder will close as soon as reset is pressed.

When the **PROCESS OPEN** setpoint is "Latched", a momentary opening of a contact connected to Terminal 51 will cause a latched trip condition. Pressing the reset key will allow the feeder to close. If the FM2 is receiving a constant close signal the feeder will close as soon as reset is pressed.

# S4 Control

## Undervoltage Autoreclose

**PATH: SETPOINTS ⇩⇩⇩⇩ S4 CONTROL ⇨ UNDERVOLTAGE AUTO RECLOSE**

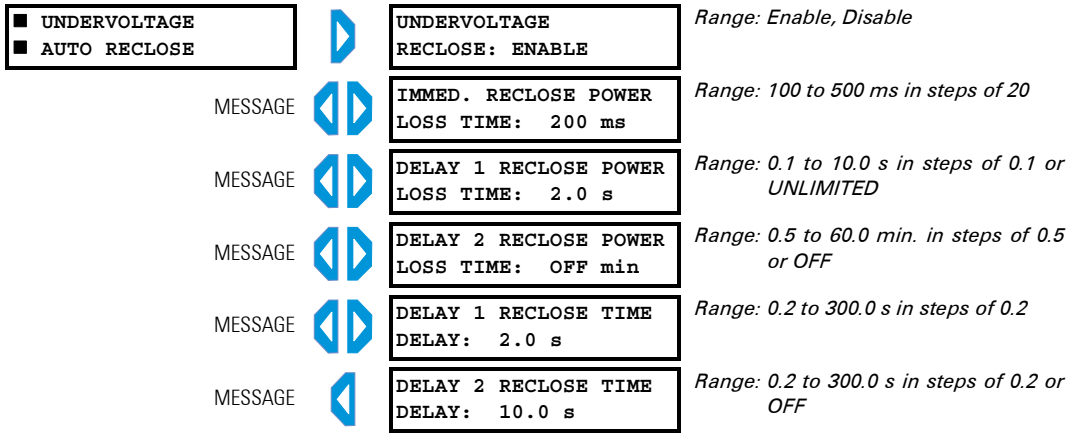


It is possible to reclose the feeder after a momentary power loss if this feature is enabled. When the control voltage (derived from the incoming feeder supply) drops below the dropout voltage, both output relays are de-energised. Voltage thresholds for the two internally set control voltage levels are 80 V for 120 V control voltage and 150 V for 240 V control voltage. At nominal voltage, the FM2 rides through a power outage less than 135 ms (varies according to the number of output relays energised at the time of power failure). Critical data is saved to $E^2$PROM at this time. A power outage that exceeds the FM2 ride-through initialises a backup timer that continues to run without power for approximately 1 hour. Once control power is restored, the FM2 can take up to 300 ms to initialise; this time includes the initializing of the microprocessor, variables in the code, the determination that a reclose is required, and the closure of the internal output relay. The reaction time of the output relay will be in addition to the 300 ms power-up time. If control voltage is restored within the **IMMED. RECLOSE POWER LOSS TIME** (0.1 to 0.5 seconds), the feeder will be reclosed immediately.

If the supply is restored after the **IMMED. RECLOSE POWER LOSS TIME** but before the **DELAY 1 RECLOSE POWER LOSS TIME**, the feeder will be reclosed after the **DELAY 1 RECLOSE TIME DELAY**. If a delayed reclose is always required, set the **DELAY 1 RECLOSE POWER LOSS TIME** to "Unlimited".

If the supply is restored after the **DELAY 1 RECLOSE POWER LOSS TIME** and before the **DELAY 2 RECLOSE POWER LOSS TIME**, the feeder will be reclosed after the **DELAY 2 RECLOSE TIME DELAY**. Set the **DELAY 2 RECLOSE POWER LOSS TIME** to "OFF" if this feature is not required.

The **IMMED. RECLOSE POWER LOSS TIME**, **DELAY 1 RECLOSE POWER LOSS TIME**, and **DELAY 1 RECLOSE POWER LOSS TIME** are measured by the FM2 backup processor, not the time the AC power has been off.

NOTE

When configuring through software, a value of 10.1 s for the **DELAY 1 RECLOSE POWER LOSS TIME** indicates "UNLIMITED", a value of 60.5 min. for the **DELAY 1 RECLOSE POWER LOSS TIME** indicates "OFF", and a value of 300.2 s for the **DELAY 2 RECLOSE TIME DELAY** indicates "OFF".

## Prog Relay 1 Config

**PATH: SETPOINTS ⇩⇩⇩⇩ S4 CONTROL ⇨⇨ PROG RELAY 1 CONFIG**

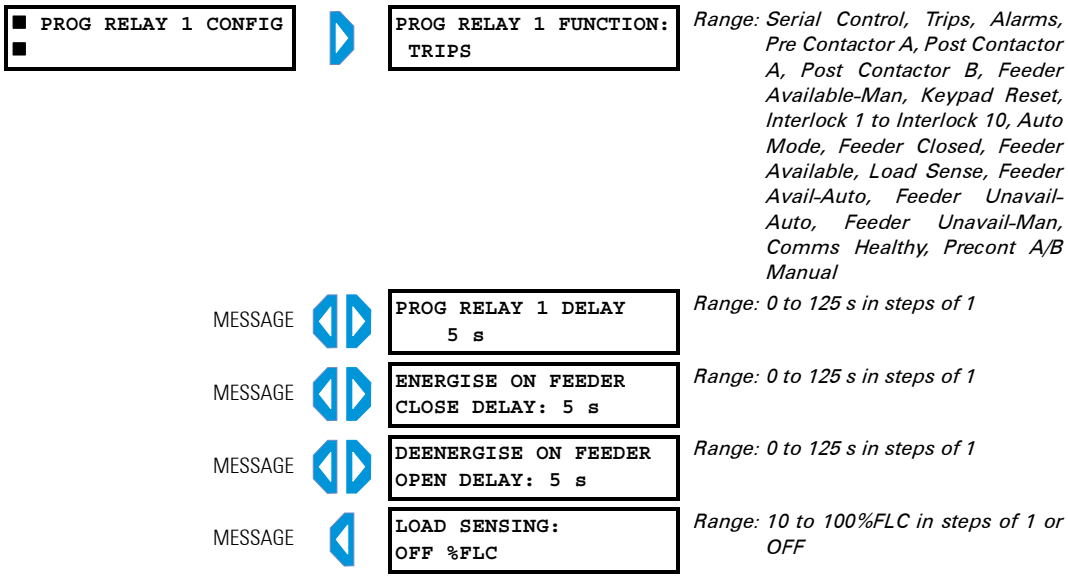


The FM2 has one auxiliary programmable output relay. This output can be assigned via the **PROG RELAY 1 CONFIG** setpoint to any of the following functions. The dual form "C" Programmable Relay 1 can be configured to activate on various conditions as described below.

- **SERIAL CONTROL**: Programmable Relay 1 can be energised/de-energised via the serial port.
- **TRIPS**: The Programmable Relay 1 will be energised when the FM2 is tripped. Resetting the FM2 will de-energise Programmable Relay 1.
- **ALARMS**: The Programmable Relay 1 will be energised while any alarm is present.
- **PRE CONTACTOR A**: The Programmable Relay 1 will energise when the FM2 receives a close command. Relay A will close after the delay specified in the **PROG RELAY 1 DELAY** setpoint. The Programmable Relay 1 will de-energise after Relay A is open.
- **PRE CONTACTOR A/B MAN**: The Programmable Relay 1 will energise when the FM2 receives a Close A / B command from the keypad. Relay A/B will close after the delay specified in the **PROG RELAY 1 DELAY** setpoint. The Programmable Relay will de-energise when Relay A/B energises.
- **POST CONTACTOR A**: The Programmable Relay 1 will energise after Relay A in the time specified by the **PROG RELAY 1 DELAY** setpoint. The Programmable Relay 1 will de-energise when Relay A de-energises.
- **POST CONTACTOR B**: The Programmable Relay 1 will energise after Relay B in the time specified by the **PROG RELAY 1 DELAY** setpoint. The Programmable Relay 1 will de-energise when Relay B de-energises.
- **FEEDER AVAILABLE MANUAL**: When the Feeder Status message indicates that the feeder can be closed manually, the Programmable Relay 1 will be energised. Any other Feeder Status indication will cause the Programmable Relay 1 to be de-energised.
- **KEYPAD RESET**: Programmable Relay 1 will energise while the RESET key is pressed.
- **INTERLOCK 1 to 10**: Programmable Relay 1 will energise while the corresponding Interlock 1 to 10 switch inputs are closed.
- **AUTO MODE**: Programmable Relay 1 will energise when the Auto LED is on.

- **FEEDER CLOSED**: Programmable Relay 1 will energise while the feeder is closed, in conjunction with the **ENERGISE FEEDER ON CLOSE DELAY** and **DE-ENERGISE FEEDER ON CLOSE DELAY** setpoints.
- **FEEDER AVAILABLE AUTO**: This Programmable Relay function will activate the Programmable Relay when the feeder is available to close in Auto Mode.
- **FEEDER UNAVAILABLE AUTO**: This Programmable Relay function will activate the Programmable Relay when the feeder is not available to close in Auto Mode.
- **FEEDER AVAILABLE MAN:** This Programmable Relay function will activate the Programmable Relay when the feeder is available to close in Manual mode.
- **FEEDER UNAVAILABLE MAN:** This Programmable Relay function will activate the Programmable Relay when the feeder is not available to close in Manual mode.
- **COMMS HEALTHY**: This Programmable Relay function will activate the Programmable Relay when the relay serial communication port is healthy.
- **LOAD SENSE**: This Programmable Relay function will activate the Programmable Relay when one of the phase current is greater than the **LOAD SENSING** setpoint.

The **PROG RELAY 1 DELAY** setpoint provides a delayed energization of Programmable Relay 1 when "Pre Contactor A", "Post Contactor A", "Post Contactor B", or "Precont A/B Manual" is selected as the **PROG RELAY 1 FUNCTION**.

The **ENERGISE ON FEEDER CLOSE DELAY** setpoint provides a delayed energization of the Programmable Relay 1 when "Feeder Closed" is selected as the **PROG RELAY 1 FUNCTION**. The Programmable Relay 1 energises after this time delay on the occurrence of a feeder close. Likewise, the **DE-ENERGISE ON FEEDER CLOSE DELAY** setpoint provides a delayed de-energization of the Programmable Relay 1 when "Feeder Closed" is selected as the **PROG RELAY 1 FUNCTION**. Programmable Relay 1 will de-energise after this time delay on the occurrence of a feeder open.

The **LOAD SENSING** setpoint determines the operating level for the load sensing function when "Load Sense" is selected as the **PROG RELAY 1 FUNCTION**. When configuring through software, a value of 101%FLC indicates "OFF".



# S5 Monitoring

## Plant Condition

**PATH: SETPOINTS ⇩⇩⇩⇩⇩ S5 MONITORING ⇨ PLANT CONDITION**

```
■ PLANT CONDITION
■
```

⇨

```
CONTACTOR INSPECTION
  OFF x 1000 OPS
```

*Range: 50000 to 10000000 operations in steps of 10000 or OFF*

Enter the interval at which the contactor/breaker contacts must be inspected for wear. When the **NUMBER OF OPERATIONS** counter exceeds this setpoint a Contactor Inspection Interval Alarm is generated. Use the **S1 CONFIGURATION** ⇨⇨⇨⇨⇨⇨ **STATISTICS** ⇨⇨ **CLEAR COUNTERS** setpoint to clear the **NUMBER OF OPERATIONS** counter. If this feature is not required set this setpoint to "OFF". When configuring through software, a value of 10010 × 1000 ops indicates "OFF".

# S6 Factory Data

## Product Firmware

PATH: SETPOINTS ⇩⇩⇩⇩⇩⇩ S6 FACTORY DATA ⇨ PRODUCT FIRMWARE IDENTIFICATION

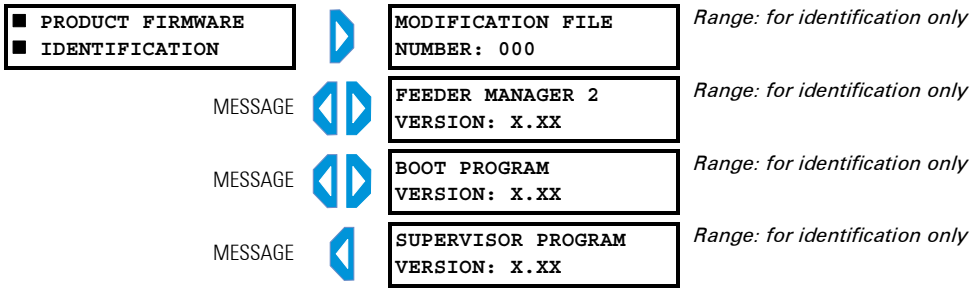


The firmware, boot program, supervisor program, and hardware revisions are displayed here. If the FM2 has been modified so that it is no longer a standard model, a modification number will be displayed in the **MODIFICATION FILE NUMBER** message.

## Product Model

PATH: SETPOINTS ⇩⇩⇩⇩⇩⇩ S6 FACTORY DATA ⇨⇨ PRODUCT MODEL IDENTIFICATION

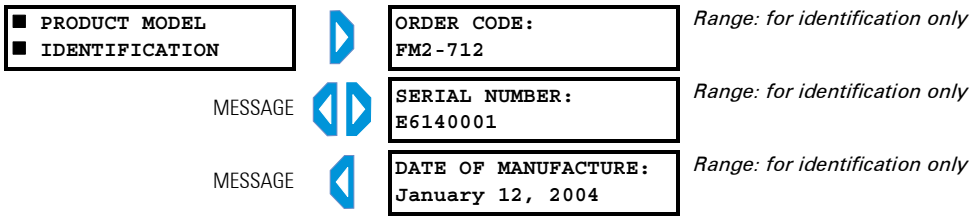


The FM2 order code, serial number, and date of manufacture are displayed here.

## Factory Service Data

PATH: SETPOINTS ⇩⇩⇩⇩⇩⇩ S6 FACTORY DATA ⇨⇨⇨ FACTORY SERVICE DATA




This menu is for use by GE Multilin personnel for testing and calibration purposes.




# 6 Monitoring

## Actual Values Viewing

### Actual Values Menu

| | | | |
|---|---|---|---|
| ■ ACTUAL VALUES<br>■ A1 DATA | | ■ FEEDER DATA<br>■ | See page 6-3. |
| | MESSAGE ▲ | END OF PAGE | |
| ACTUAL | | | |
| ■ ACTUAL VALUES<br>■ A2 STATUS | | ■ TRIP DATA<br>■ | See page 6-4. |
| | MESSAGE ▲▼ | ■ ALARM DATA<br>■ | See page 6-5. |
| | MESSAGE ▲▼ | ■ FEEDER STATUS<br>■ | See page 6-6. |
| | MESSAGE ▲ | END OF PAGE | |
| ACTUAL | | | |
| ■ ACTUAL VALUES<br>■ A3 INPUTS | | ■ INPUT CONTACTS<br>■ STATUS | See page 6-7. |
| | MESSAGE ▲ | END OF PAGE | |
| ACTUAL | | | |
| ■ ACTUAL VALUES<br>■ A4 STATISTICS | | ■ TIMERS<br>■ | See page 6-7. |
| | MESSAGE ▲▼ | ■ COUNTERS<br>■ | See page 6-8. |
| | MESSAGE ▲ | END OF PAGE | |

## Description

Any measured value can be displayed on demand using the ACTUAL and MESSAGE keys. Press the ACTUAL key to select the actual values, then the MESSAGE DOWN key to select the beginning of a new page of monitored values. These are grouped as follows: A1 Data, A2 Status, A3 Inputs, and A4 Statistics. Use the MESSAGE keys to move between actual value messages. A detailed description of each displayed message in these groups is given in the sections that follow.

## Default Message Selection

One default message can be selected to view when the feeder is closed and the FM2 is left unattended. If no keys are pressed for 2 minutes and the feeder is closed, then the currently displayed message will automatically be overwritten by the default message. Alarm and trip messages will override default message display. Any Actual Value can be selected as a default message.

To select a default message, use the MESSAGE keys to display any actual values message to be displayed. Press the STORE key twice in rapid succession. The display will read:

```
NEW DEFAULT LINE
SELECTED
```

To delete the default message and select a new default message, use the ACTUAL and MESSAGE keys to display the desired new default message. Press the STORE key twice in rapid succession. The display will prompt:

```
NEW DEFAULT LINE
SELECTED
```

The new default message is now stored.

## Abbreviations

The following abbreviations are used in the actual values messages.

- A, AMPS: amperes
- kW: kilowatts
- kWhr: kilowatt-hours
- MIN: minutes
- N/O: normally open
- O/L: overload
- s: seconds

# A1 Data

## Feeder Data

PATH: ACTUAL VALUES ⇩ A1 DATA ⇨ FEEDER DATA

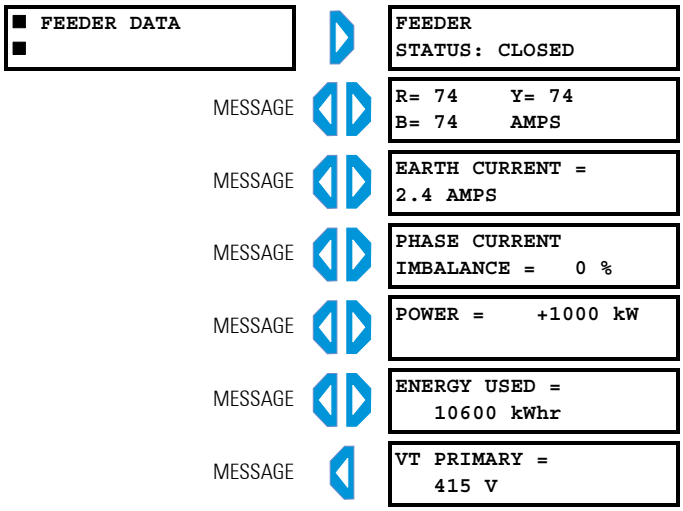


This **FEEDER STATUS** value indicates the name and status of the feeder. The top line of the display (20 characters) can be programmed to a user defined alphanumeric name. The second line indicates feeder status. The following list shows the possible feeder status indications:

- *Unavailable*: There is at least one condition present that is preventing close commands from operating. Possible conditions are: a trip is present, the OPEN key is being pressed, the Open Switch input is open, one of the Process Interlock switches is open or an undervoltage delayed reclose is in progress.
- *Available-Auto*: Close commands from the serial port or the Auto Close A / Auto Close B interlock switch inputs will be performed. Close commands from the Close A / Close B switch inputs and the CLOSE keys will be ignored.
- *Available-Manual*: Close commands from the Close A / Close B switch inputs and/or the CLOSE keys will be performed. Close commands from the serial port and Auto Close A / Auto Close B switch inputs will be ignored.
- *Closed*: At least one contactor output relay is closed.

The actual RMS current in each phase (R, Y, and B) is displayed in amps. The **EARTH CURRENT** value displays the earth fault leakage current flowing from any phase to earth in amps.

The **PHASE CURRENT IMBALANCE** value displays the percentage imbalance in the feeder phase currents. The imbalance is calculated as shown in *Specifications* on page 1–3.

The **POWER** value displays the three phase power, calculated using phase A current and voltage $V_{rn}$ or $V_{ry}$. The **ENERGY USED** value displays the total accumulated energy used since last cleared and is updated once every minute. The **VT PRIMARY** value displays the voltage present at the primary of the VT. The last three values appear only if the **VT PRIMARY** setpoint is programmed.

NOTE

Power and energy used values are not displayed if the **PHASE CT PRIMARY** setting is greater than 1000.

Monitoring

# A2 Status

## Trip Data

PATH: ACTUAL VALUES ⇩⇩ A2 STATUS ⇨ TRIP DATA

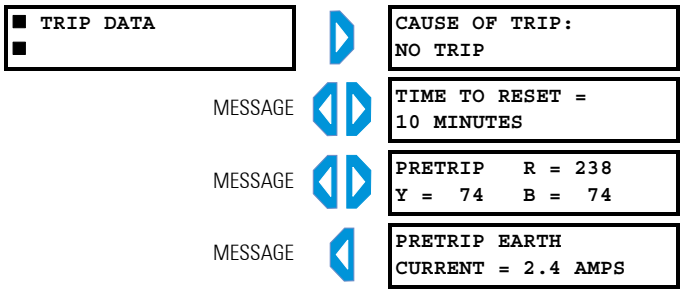


The **CAUSE OF TRIP** value displays the cause of the current trip. If no trip is present, the display indicates "NO TRIP". When a trip occurs, the cause of trip message will override the currently selected default message. The possible causes of trip are: Thermal Overload, Earth Fault, Plant Interlock, Local Isolator, Serial Comms Failure, Internal Fault, Emergency Open, and Process Interlock A to J.

The **TIME TO RESET** actual value is visible only when a Thermal Overload Trip is present and indicates the time remaining before the thermal overload trip can be reset. The Lockout Reset Interlock can be used to override this time.

The thermal capacity value will decrease exponentially and an overload trip can normally be reset when the thermal capacity values decreases to 15%. The relay uses a cooling time constant of 6 minutes for calculating time to reset the overload trip.

The time to reach 15% thermal capacity used can be calculated by:

$$15 = |100| \times e^{-t/T} \Rightarrow 0.15 = e^{-t/T} \Rightarrow \frac{t}{T} = -\ln(0.15) \Rightarrow t = -T\ln(0.15)$$
$$\Rightarrow t = 11.4 \text{ minutes} \qquad \textbf{(EQ 6.1)}$$

The **PRETRIP R, Y, B** value displays the feeder phase current flowing at the time of trip. The **PRETRIP EARTH CURRENT** displays the earth leakage current that was flowing from any phase to earth at the time of trip.

NOTE

**Pretrip values for current related trips are stored in the EEPROM at the time of trip**. This enables the FM2 to "remember" pretrip values if power is removed. This feature is enabled for thermal overload and earth fault trips. When a trip not listed above occurs and power is removed, the FM2 displays zero for pretrip values.

Monitoring

## Alarm Data

PATH: ACTUAL VALUES ⇩⇩ A2 STATUS ⇨⇨ ALARM DATA

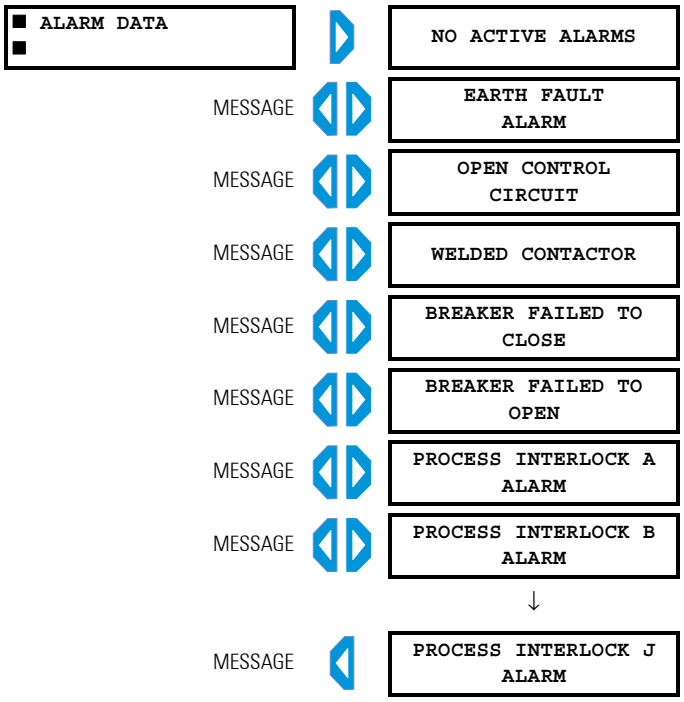


Any alarm conditions that are currently active will be displayed. This could be one or more of the following:

- **NO ACTIVE ALARMS**: This message is displayed only when there are no alarms currently active. If at least one alarm has occurred, the most recent alarm message will override the currently selected default message and this message will not be displayed.
- **EARTH FAULT ALARM**: The earth fault current has exceeded Earth Fault Alarm Level for the Earth Fault Alarm Time Delay.
- **OPEN CONTROL CIRCUIT**: While performing a close, the FM2 did not see a change in contactor status (open to closed) within 0.25 second of energizing the output relay.
- **WELDED CONTACTOR**: While performing an open, the FM2 did not see a change in contactor status (closed to open) within 0.25 second of de-energizing the output relay.
- **BREAKER FAILED TO CLOSE**: This message is displayed while performing a close for circuit breaker feeders, if the FM2 did not detect a change in breaker status within 0.25 second of a close command.
- **BREAKER FAILED TO OPEN**: This message is displayed while performing an open for circuit breaker feeders, if the FM2 did not detect a change in breaker status within 0.25 second of a trip or open command.
- **PROCESS INTERLOCK A(J) ALARM**: An open Process Interlock A(J) switch input has been detected.

## Feeder Status

**PATH: ACTUAL VALUES ⇨⇩ A2 STATUS ⇨⇨⇨ FEEDER STATUS**

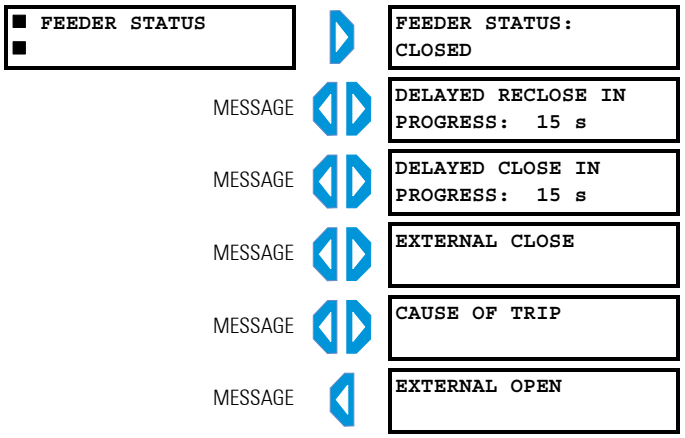


The **FEEDER STATUS** value has the same possible values as the **A1 DATA** ⇩ **FEEDER DATA** ⇨ **FEEDER STATUS** message. Refer to *Feeder Data* on page 6–3 for details.

The **DELAYED RECLOSE IN PROGRESS** value will appear if a delayed undervoltage reclose is in progress. The displayed time indicates the time remaining until the close sequence will begin. The **DELAYED CLOSE IN PROGRESS** value will appear if a close is in progress. This occurs if one of the programmable relays is set to Pre Contactor A OR B operation. The displayed time indicates the time remaining until Relay A energises.

The **EXTERNAL CLOSE** value will appear if the contactor/breaker closed without receiving a close command from the FM2. The FM2 will close the corresponding output relay to seal in the contactor. The **EXTERNAL OPEN** value indicates that the open operation was caused externally to the FM2, i.e. The Relay A input status changed from close to open.

The **CAUSE OF TRIP** value indicates the cause of the current trip condition.

# A3 Inputs

## Input Contacts Status

PATH: ACTUAL VALUES ⇩⇩⇩ A3 INPUTS ⇨ INPUT CONTACTS STATUS

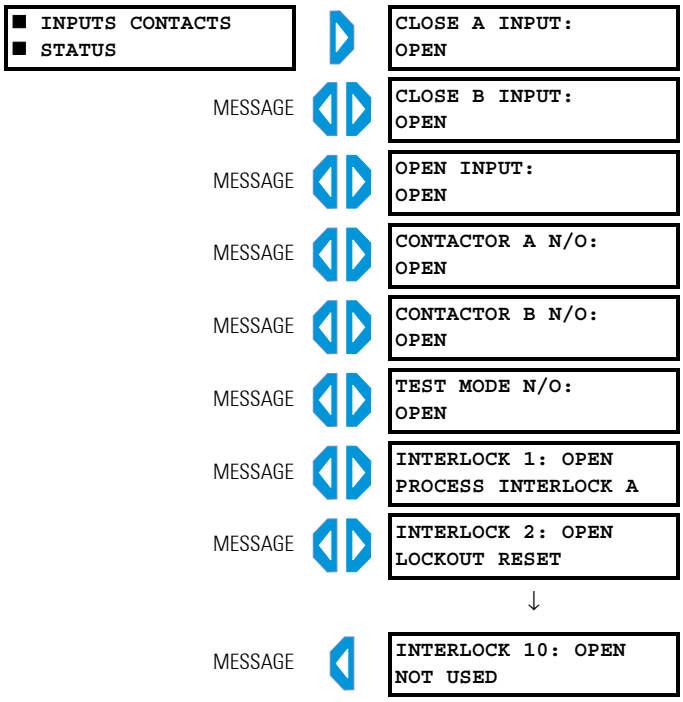


The status of various input contacts are shown in this menu. A value of "CLOSED" indicates the corresponding switch is closed, and a value of "OPEN" indicates the corresponding switch is open.

The **INTERLOCK 1(10)** messages also indicated the function assigned (if any) to the corresponding interlock on the second line.

# A4 Statistics

## Timers

PATH: ACTUAL VALUES ⇩⇩⇩⇩ A4 STATISTICS ⇨ TIMERS

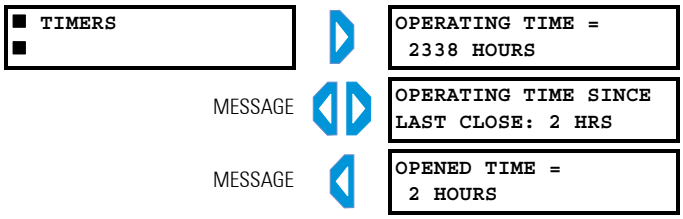


The total accumulated time the feeder has been operating is indicated by the **OPERATING TIME**.

This non-accumulated time the feeder has been in operation since last close is indicated by the **OP TIME SINCE LAST CLOSE**. This value clears to zero once the feeder has opened. The non-accumulated feeder open time indicated by the **OPENED TIME**. This is the amount of time that the feeder has been open since the last time it was in operation. This value clears to zero the next time the feeder is closed.

## Counters

**PATH: ACTUAL VALUES ⇩⇩⇩⇩ A4 STATISTICS ⇨⇨ COUNTERS**

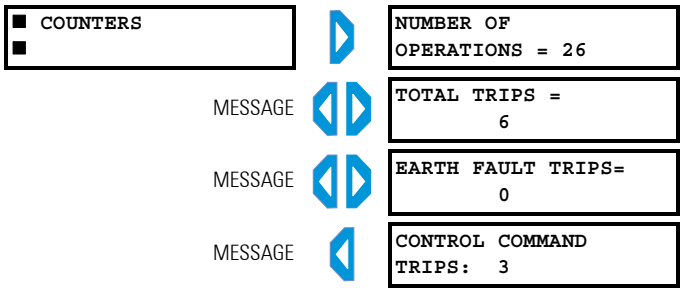


The total number of contactor/breaker operations is indicated by the **NUMBER OF OPERATIONS** actual value. When the FM2 receives feedback into the contactor status input to confirm that one of the contactors/breaker has closed, this counter will increment.

When the FM2 trips for any reason, the **TOTAL TRIPS** value is incremented. It is the sum of all of the individual causes of trip. When a earth fault trip occurs, the **EARTH FAULT TRIPS** value is incremented. If a control trip occurs (i.e. Plant Interlock, Local Isolator, etc.), the **CONTROL COMMAND TRIPS** value is incremented.




# 7 Communications

## FM2 Modbus Protocol

### Overview

The FM2 implements a subset of the Modicon Modbus RTU serial communication standard. The Modbus protocol is hardware-independent. That is, the physical layer can be any of a variety of standard hardware configurations. This includes RS232, RS422, RS485, fibre optics, etc. Modbus is a single master / multiple slave type of protocol suitable for a multi-drop configuration as provided by RS485 hardware. The FM2 Modbus implementation employs two-wire RS485 hardware. Using RS485, up to 32 FM2s can be daisy-chained together on a single communication channel.

The FM2 is always a Modbus slave. They can not be programmed as Modbus masters. Computers or PLCs are commonly programmed as masters.

Modbus protocol exists in two versions: Remote Terminal Unit (RTU, binary) and ASCII. Only the RTU version is supported by the FM2. Both monitoring and control are possible using read and write register commands. Other commands are supported to provide additional functions.

### Electrical Interface

The hardware or electrical interface in the FM2 is two-wire RS485. In a two-wire link, data is transmitted and received over the same two wires. Although RS485 two wire communication is bi-directional, the data is never transmitted and received at the same time. This means that the data flow is half duplex.

RS485 lines should be connected in a daisy-chain configuration with terminating networks installed at each end of the link (i.e. at the master end and the slave farthest from the master). The terminating network should consist of a 120 Ω resistor in series with a 1 nF ceramic capacitor when used with Belden 9841 RS485 wire. Use shielded wire to minimise noise. The shield should be connected to all of the FM2s as well as the master, then earthed at one location only. This keeps the earth potential at the same level for all of the devices on the serial link.

NOTE

**Polarity is important in RS485 communications. The '+' (positive) terminals of every device must be connected together.**

See *FIGURE 2–6: RS485 Termination* on page 2–6 for additional information.

### Data Frame Format and Data Rate

One data frame of an asynchronous transmission to or from a FM2 typically consists of 1 start bit, 8 data bits, and 1 stop bit. This produces a 10 bit data frame. This is important for transmission through modems at high bit rates (11 bit data frames are not supported by Hayes modems at bit rates of greater than 300 bps). The FM2 has the capability of adding an odd or even parity bit if necessary.

Modbus protocol can be implemented at any standard communication speed. The FM2 supports operation at 1200, 2400, 4800, 9600, 19200, and 57600 baud.

## Data Packet Format

A complete request/response sequence consists of the following bytes (transmitted as separate data frames):

**Master Request Transmission:**

SLAVE ADDRESS: 1 byte
FUNCTION CODE: 1 byte
DATA: variable number of bytes depending on FUNCTION CODE
CRC: 2 bytes

**Slave Response Transmission:**

SLAVE ADDRESS: 1 byte
FUNCTION CODE: 1 byte
DATA: variable number of bytes depending on FUNCTION CODE
CRC: 2 bytes

- **SLAVE ADDRESS**: This is the first byte of every transmission. This byte represents the user-assigned address of the slave device that is to receive the message sent by the master. Each slave device must be assigned a unique address and only the addressed slave will respond to a transmission that starts with its address. In a master request transmission the slave address represents the address of the slave to which the request is being sent. In a slave response transmission the slave address represents the address of the slave that is sending the response.




A master transmission with a slave address of 0 indicates a broadcast command. Broadcast commands can be used only in certain situations; see *Applications* on page 7–9 for details.

- **FUNCTION CODE**: This is the second byte of every transmission. Modbus defines function codes of 1 to 127. The FM2 implements some of these functions. See *FM2 Supported Functions* on page 7–3 details of the supported function codes. In a master request transmission the function code tells the slave what action to perform. In a slave response transmission the function code tells the master what function was performed as requested. If the high order bit of the function code sent from the slave is a 1 (i.e. if the function code is > 127) then the slave did not perform the function as requested and is sending an error or exception response.
- **DATA**: This will be a variable number of bytes depending on the function code. This may be actual values, setpoints, or addresses sent by the master to the slave or by the slave to the master. See *FM2 Supported Functions* on page 7–3 for a description of the supported functions and the data required for each.
- **CRC**: This is a two byte error checking code.

## Error Checking

The RTU version of Modbus includes a two byte CRC-16 (16 bit cyclic redundancy check) with every transmission. The CRC-16 algorithm essentially treats the entire data stream (data bits only; start, stop and parity ignored) as one continuous binary number. This number is first shifted left 16 bits and then divided by a characteristic polynomial (1100000000000101B). The 16-bit remainder of the division is appended to the end of the transmission, MSByte first. The resulting message including CRC, when divided by the same polynomial at the receiver will give a zero remainder if no transmission errors have occurred.

If a FM2 Modbus slave device receives a transmission in which an error is indicated by the CRC-16 calculation, the slave device will not respond to the transmission. A CRC-16 error indicates than one or more bytes of the transmission were received incorrectly and thus the entire transmission should be ignored in order to avoid the FM2 performing any incorrect operation.

The CRC-16 calculation is an industry standard method used for error detection. An algorithm is included here to assist programmers in situations where no standard CRC-16 calculation routines are available.

### CRC-16 Algorithm

Once the following algorithm is complete, the working register "A" will contain the CRC value to be transmitted. Note that this algorithm requires the characteristic polynomial to be reverse bit ordered. The MSBit of the characteristic polynomial is dropped since it does not affect the value of the remainder. The following symbols are used in the algorithm:

-->: data transfer;
A: 16-bit working register;
AL: low order byte of A;
AH: high order byte of A;
CRC: 16-bit CRC-16 value;
i and j: loop counters;
(+): logical exclusive-OR operator;
Di: i-th data byte (i = 0 to N – 1);
G: 16-bit characteristic polynomial = 1010000000000001 with MSbit dropped and bit order reversed;
shr(x): shift right (the LSbit of the low order byte of x shifts into a carry flag, a '0' is shifted into the MSbit of the high order byte of x, all other bits shift right one location

The algorithm is shown below:

```
1. FFFF hex --> A
2. 0 --> i
3. 0 --> j
4. Di (+) AL --> AL
5. j + 1 --> j
6. shr(A)
7. is there a carry?  No: go to 8; Yes: G (+) A --> A
8. is j = 8?  No: go to 5; Yes: go to 9.
9. i + 1 --> i
10. is i = N?  No: go to 3; Yes: go to 11.
11. A --> CRC
```

### Timing

Data packet synchronization is maintained by timing constraints. The receiving device must measure the time between the reception of characters. If 3.5 character times elapse without a new character or completion of the packet, then the communication link must be reset (i.e. all slaves start listening for a new transmission from the master). Thus at 9600 baud a delay of greater than $3.5 \times 1 / 9600 \times 10 = 3.65$ ms will reset the communication link.

# Modbus Functions

### FM2 Supported Functions

The following functions are supported by the FM2:

- Function Code 01 - Read Coil Status
- Function Code 03 - Read Setpoints and Actual Values
- Function Code 04 - Read Setpoints and Actual Values
- Function Code 05 - Execute Operation
- Function Code 06 - Store Single Setpoint
- Function Code 07 - Read Device Status
- Function Code 08 - Loopback Test
- Function Code 10 - Store Multiple Setpoints

### Function Code 01h

**Modbus implementation**: Read Coil Status
**FM2 implementation**: Read Last Command Operation

This function code allows the master to read back which command operation was last performed using Modbus function code 05: force single coil/execute operation. Upon request of coil/operation status, the FM2 will set a bit corresponding to the last operation performed. The operation commands are in the Modbus Data Formats table under code F22.

NOTE

Operation 0 will be set (1) if no operations have been performed since the FM2 has been powered up.

For example, a request slave 17 to respond with status of 6 operations, starting at operation 10, after performing command operation 13 (Manual Inhibit). For this example the data definition is as follows:

| | | | | | | | | |
|---|---|---|---|---|---|---|---|---|
| Data 1 = 08 (hex): | 0 | 0 | 0 | 0 | 1 | 0 | 0 | 0 |
| Command operation number: | N/A | N/A | 15 | 14 | 13 | 12 | 11 | 10 |

The master/slave packet format is shown below:

| Master Transmission | Bytes | Example | Description |
|---|---|---|---|
| Slave Address | 1 | 11 | message for slave 17 |
| Function Code | 1 | 01 | read last command operation |
| Operation Starting Address | 2 | 00 0A | start at operation 10 |
| Operations to Read | 2 | 00 06 | read 6 operations |
| CRC | 2 | 9E 9A | CRC error code |

| Slave Response | Bytes | Example | Description |
|---|---|---|---|
| Slave Address | 1 | 11 | message from slave 17 |
| Function Code | 1 | 01 | read last command operation |
| Byte Count | 1 | 01 | 6 operations = 6 bits<br>only one byte is required |
| Data 1 (see definition above) | 1 | 08 | bit corresponding to command 13 |
| CRC | 2 | 54 8E | CRC error code |

### Function Code 03h

Modbus implementation: Read Holding Registers
FM2 implementation: Read Setpoints and Actual Values

For the FM2 implementation of Modbus, this command can be used to read any setpoints ('holding registers') or actual values ('input registers'). Holding and input registers are 16 bit (two byte) values transmitted high order byte first. Thus all FM2 setpoints and actual values are sent as two bytes. The maximum number of registers that can be read in one transmission is 125. This function code is identical to function code 04.

The slave response to this function code is the slave address, function code, a count of the number of data bytes to follow, the data itself and the CRC. Each data item is sent as a two byte number with the high order byte sent first.

For example, consider a request for slave 17 to respond with 3 registers starting at address 006B. For this example the register data in these addresses is as follows:

| Address | Data |
|---|---|
| 006B | 022B |
| 006C | 0000 |
| 006D | 0064 |

The master/slave packets have the following format:

| Master Transmission | Bytes | Example | Description |
|---|---|---|---|
| Slave Address | 1 | 11 | message for slave 17 |
| Function Code | 1 | 03 | read registers |
| Data Starting Address | 2 | 00 6B | data starting at 006B |
| Number of Setpoints | 2 | 00 03 | 3 registers = 6 bytes total |
| CRC | 2 | 76 87 | CRC error code |

| Slave Response | Bytes | Example | Description |
|---|---|---|---|
| Slave Address | 1 | 11 | message from slave 17 |
| Function Code | 1 | 03 | read registers |
| Byte Count | 1 | 06 | 3 registers = 6 bytes total |
| Data 1 (see definition above) | 2 | 02 2B | value in address 006B |
| Data 2 (see definition above) | 2 | 00 00 | value in address 006C |
| Data 3 (see definition above) | 2 | 00 64 | value in address 006D |
| CRC | 2 | C8 BA | CRC error code |

### Function Code 04h

**Modbus Implementation**: Read Input Registers
**FM2 implementation**: Read Setpoints and Actual Values

For the FM2 implementation of Modbus, this command can be used to read any setpoints ('holding registers') or actual values ('input registers'). Holding and input registers are 16-bit (two byte) values transmitted high order byte first. Thus all FM2 setpoints and actual values are sent as two bytes. The maximum number of registers that can be read in one transmission is 125. This function code is identical to function code 03.

The slave response to this function code is the slave address, function code, a count of the data bytes to follow, the data itself and the CRC. Each data item is sent as a two byte number with the high order byte sent first.

For example, request slave 17 to respond with 1 register starting at address 0008. For this example the value in this register (0008) is 0000.

| Master Transmission | Bytes | Example | Description |
|---|---|---|---|
| Slave Address | 1 | 11 | message for slave 17 |
| Function Code | 1 | 04 | read registers |
| Data Starting Address | 2 | 00 08 | data starting at 0008 |
| Number of Actual Values | 2 | 00 01 | 1 register = 2 bytes |
| CRC | 2 | B2 98 | CRC error code |

| Slave Response | Bytes | Example | Description |
|---|---|---|---|
| Slave Address | 1 | 11 | message from slave 17 |
| Function Code | 1 | 04 | read registers |
| Byte Count | 1 | 02 | 1 registers = 2 bytes total |
| Data (see definition above) | 2 | 00 00 | value in address 0008 |
| CRC | 2 | 78 F3 | CRC error code |

### Function Code 05h

**Modbus Implementation**: Force Single Coil
**FM2 Implementation**: Execute Operation

This function code allows the master to request a FM2 to perform specific command operations. The commands supported by the FM2 are listed in *Applications* on page 7–9.

For example, to request slave 17 to execute operation code 1 (reset), we have the following master/slave packet format:

| Master Transmission | Bytes | Example | Description |
|---|---|---|---|
| Slave Address | 1 | 11 | message for slave 17 |
| Function Code | 1 | 05 | execute operation |
| Operation Code | 2 | 00 01 | operation code 1 |
| Code Value | 2 | FF 00 | perform function |
| CRC | 2 | DF 6A | CRC error code |

| Slave Response | Bytes | Example | Description |
|---|---|---|---|
| Slave Address | 1 | 11 | message from slave 17 |
| Function Code | 1 | 05 | execute operation |
| Operation Code | 1 | 00 01 | operation code 1 (reset) |
| Code Value | 2 | FF 00 | perform reset |
| CRC | 2 | DF 6A | CRC error code |

The commands that can be performed by the FM2 using function code 05 can also be initiated by using function code 10. See *Function Code 10h* on page 7–8 for an example of performing commands using function code 10.

### Function Code 06h

**Modbus Implementation**: Preset Single Register
**FM2 Implementation**: Store Single Setpoint

This command allows the master to store a single setpoint into the memory of a FM2. The slave response to this function code is to echo the entire master transmission.

For example, request slave 17 to store the value 01F4 in setpoint address 1020. After the transmission in this example is complete, setpoints address 1020 will contain the value 01F4. The master/slave packet format is shown below:

| Master Transmission | Bytes | Example | Description |
|---|---|---|---|
| Slave Address | 1 | 11 | message for slave 17 |
| Function Code | 1 | 06 | store single setpoint |
| Data Starting Address | 2 | 10 20 | setpoint address 1020 |
| Data | 2 | 01 F4 | data for address 1020 |
| CRC | 2 | 8E 47 | CRC error code |

| Slave Response | Bytes | Example | Description |
|---|---|---|---|
| Slave Address | 1 | 11 | message from slave 17 |
| Function Code | 1 | 06 | store single setpoint |
| Data Starting Address | 1 | 10 20 | setpoint address 1020 |
| Data | 2 | 01 F4 | data in address 1020 |
| CRC | 2 | 8E 47 | CRC error code |

### Function Code 07h

**Modbus Implementation**: Read Exception Status
**FM2 Implementation**: Read Device Status

This is a function used to quickly read the status of a selected device. A short message length allows for rapid reading of status. The status byte returned will have individual bits set to 1 or 0 depending on the status of the slave device. For this example, consider the following FM2 general status byte:

| | |
|---|---|
| **LSBit:** | B0: Alarm condition = 1 |
| | B1: Trip condition = 1 |
| | B2: Internal fault = 1 |
| | B3: Auto mode selected = 1 |
| | B4: Contactor A N/O (input closed = 1, open = 0) |
| | B5: Contactor B N/O (input closed = 1, open = 0) |
| | B6: Programmable Relay 1 Status |
| **MSBit:** | B7: ESD Relay Status |

The master/slave packets have the following format:

| Master Transmission | Bytes | Example | Description |
|---|---|---|---|
| Slave Address | 1 | 11 | message for slave 17 |
| Function Code | 1 | 07 | read device status |
| CRC | 2 | 4C 22 | CRC error code |

| Slave Response | Bytes | Example | Description |
|---|---|---|---|
| Slave Address | 1 | 11 | message from slave 17 |
| Function Code | 1 | 07 | read device status |
| Device Status (see above) | 1 | 2C | status = 00101100b |
| CRC | 2 | 22 28 | CRC error code |

### Function Code 08h

**Modbus Implementation**: Loopback Test
**FM2 Implementation**: Loopback Test

This function is used to test the integrity of the communication link. The FM2 will echo the request.

For example, consider a loopback test from slave 17:

| Master Transmission | Bytes | Example | Description |
|---|---|---|---|
| Slave Address | 1 | 11 | message for slave 17 |
| Function Code | 1 | 08 | loopback test |
| Diagnostic Code | 2 | 00 00 | must be 0000h |
| Data | 2 | 00 00 | must be 0000h |
| CRC | 2 | E2 9B | CRC error code |

| Slave Response | Bytes | Example | Description |
|---|---|---|---|
| Slave Address | 1 | 11 | message from slave 17 |
| Function Code | 1 | 08 | loopback test |
| Diagnostic Code | 2 | 00 00 | must be 0000h |
| Data | 2 | 00 00 | must be 0000h |
| CRC | 2 | E2 9B | CRC error code |

### Function Code 10h

**Modbus Implementation**: Preset Multiple Registers
**FM2 Implementation**: Store Multiple Setpoints

This function code allows multiple setpoints to be stored into the FM2 memory. Modbus "registers" are 16-bit (two byte) values transmitted high order byte first. Thus all FM2 setpoints are sent as two bytes. The maximum number of setpoints that can be stored in one transmission is dependent on the slave device. Modbus allows up to a maximum of 60 holding registers to be stored. The FM2 response to this function code is to echo the slave address, function code, starting address, the number of setpoints stored, and the CRC.

Consider a request for slave 17 to store the value 01F4 to setpoint address 1020 and the value 2710 to setpoint address 1021. After the transmission in this example is complete, FM2 slave 17 will have the following setpoints information stored:

| Address | Data |
|---|---|
| 1020 | 01F4 |
| 1021 | 2710 |

The master/slave packets have the following format:

| Master Transmission | Bytes | Example | Description |
|---|---|---|---|
| Slave Address | 1 | 11 | message for slave 17 |
| Function Code | 1 | 10 | store setpoints |
| Data Starting Address | 2 | 10 20 | setpoint address 1028h |
| Number of Setpoints | 2 | 00 02 | 2 setpoints = 4 bytes total |
| Byte Count | 1 | 04 | 4 bytes of data |
| Data 1 | 2 | 01 F4 | data for address 1020h |
| Data 2 | 2 | 27 10 | data for address 1021h |
| CRC | 2 | 32 85 | CRC error code |

| Slave Response | Bytes | Example | Description |
|---|---|---|---|
| Slave Address | 1 | 11 | message from slave 17 |
| Function Code | 1 | 10 | store setpoints |
| Data Starting Address | 2 | 10 20 | setpoint address 1020h |
| Number of Setpoints | 2 | 00 02 | 2 setpoints |
| CRC | 2 | 46 52 | CRC error code |

### Error Responses

When a FM2 detects an error other than a CRC error, a response will be sent to the master. The MSBit of the function code byte will be set to 1 (i.e. the function code from the slave is equal to the function code sent from the master plus 128). The following byte will be an exception code indicating the type of error that occurred.

Transmissions received from the master with CRC errors will be ignored by the FM2. The slave response to an error (other than CRC error) will be:

SLAVE ADDRESS: 1 byte
FUNCTION CODE: 1 byte (with MSbit set to 1)
EXCEPTION CODE: 1 byte
CRC: 2 bytes

The FM2 implements the following exception response codes.

- 01 - ILLEGAL FUNCTION: The function code transmitted is not one of the functions supported by the FM2.
- 02 - ILLEGAL DATA ADDRESS: The address referenced in the data field transmitted by the master is not an allowable address for the FM2.
- 03 - ILLEGAL DATA VALUE: The value referenced in the data field transmitted by the master is not within range for the selected data address.

# Applications

## Performing Commands with Function Code 10h

Commands can be performed using function code 16 as well as function code 5. When using Function Code 16, the Command Function register must be written with a value of 5. The Command Operation register must be written with a valid command operation number. The Command Data registers must be written with valid data; this is dependent upon the command operation.

The commands supported by the FM2 are listed in *Data Formats* on page 7–21 under code F22.

For example, consider a request for slave 17 to perform command operation 1 (RESET): The master/slave packets have the following format:

| Master Transmission | Bytes | Example | Description |
|---|---|---|---|
| Slave Address | 1 | 11 | message for slave 17 |
| Function Code | 1 | 10 | store multiple setpoints |
| Data Starting Address | 2 | 11 60 | setpoint address 1160h |
| Number of Setpoints | 2 | 00 02 | 2 setpoints = 4 bytes total |
| Byte Count | 1 | 04 | 4 bytes of data |
| Data 1 | 2 | 00 05 | data for address 1160h |
| Data 2 | 2 | 00 01 | data for address 1161h |
| CRC | 2 | B0 D6 | CRC error code |

| Slave Response | Bytes | Example | Description |
|---|---|---|---|
| Slave Address | 1 | 11 | message from slave 17 |
| Function Code | 1 | 10 | store multiple setpoints |
| Data Starting Address | 2 | 11 60 | setpoint address 1160h |
| Number of Setpoints | 2 | 00 02 | 2 setpoints |
| CRC | 2 | 46 7A | CRC error code |

### Storing Communications Addresses via the Broadcast Command

The default setting for the communications address from the factory and after a 'Setpoint Dump' is off. The communication speed and parity default settings are 9600 baud, no parity. We have provided a facility to store the communications address to any FM2 without using the keypad and display (typically chassis mount FM2s).

Make sure the master is transmitting to the FM2 at 9600 baud, no parity. After installing the FM2 and ensuring communications is hooked up, cycle control voltage to the FM2 you wish to set the address for. This will allow you to send a broadcast command with the new communications address for the FM2. The address must be set within 2 minutes of cycling power. Once the new address is stored or the 2 minutes have elapsed, the FM2 will ignore all further attempts at changing the communications address unless power is cycled again. The address is changed using a broadcast command to communications address 0 and a command function code.

For example, to store communications address 25 to a new FM2 without a display, we have the following master/slave packet format. The master/slave packets have the following format:

| Master Transmission | Bytes | Example | Description |
|---|---|---|---|
| Slave Address | 1 | 00 | broadcast command, all units |
| Function Code | 1 | 10 | store setpoints |
| Data Starting Address | 2 | 11 60 | setpoint address 1160h |
| Number of Setpoints | 2 | 00 03 | 3 setpoints = 6 bytes total |
| Byte Count | 1 | 06 | 6 bytes of data |
| Data 1 | 2 | 00 05 | data for address 1160h |
| Data 2 | 2 | 00 10 | data for address 1161h |
| Data 3 | 2 | 00 19 | data for address 1162h |
| CRC | 2 | BB 8C | CRC error code |

| Slave Response | Bytes | Example | Description |
|---|---|---|---|
| Slave Address | 1 | 00 | message from slave |
| Function Code | 1 | 10 | store setpoints |
| Data Starting Address | 2 | 11 60 | setpoint address 1160h |
| Number of Setpoints | 2 | 00 03 | 3 setpoints |
| CRC | 2 | 84 FB | CRC error code |

# Memory Map

## Description

The data stored in the FM2 is grouped into two areas: setpoints and actual values. Setpoints can be read and written by a master computer. Actual values can be read only. All setpoints and actual values are stored as two byte values. That is, each register address is the address of a two byte value. Addresses are listed in hexadecimal. Data values (setpoint ranges, increments, factory values) are in decimal.

**TABLE 7–1: Modbus Memory Map (Sheet 1 of 11)**

| Group | Modicon | Address | | Description | Range | Step Value | Units / Scale | Format | Default Value |
|---|---|---|---|---|---|---|---|---|---|
| | | Dec | Hex | | | | | | |
| **Actual Values (Input Registers) Addresses - 0000-0FFF** | | | | | | | | | |
| PRODUCT ID | 30001 | 0 | 0000 | GE Product Device Code | --- | --- | --- | F1 | 61 |
| | 30002 | 1 | 0001 | Hardware Version Code | --- | --- | --- | F4 | current version |
| | 30003 | 2 | 0002 | Main Software Version Code | --- | --- | --- | F1 | current version |
| | 30004 | 3 | 0003 | Modification File Number | --- | --- | --- | F1 | mod. file no. |
| | 30005 | 4 | 0004 | Boot Software Version Code | --- | --- | --- | F1 | current version |
| | 30006 | 5 | 0005 | Supervisor Processor Version Code | --- | --- | --- | F1 | current version |
| | 30007 | 6 | 0006 | ...Reserved... | ... | ... | ... | ... | ... |
| | 30008 | 7 | 0007 | Serial Number char. 1 and 2 | --- | --- | ASCII | F10 | char. 1 and 2 |
| | 30009 | 8 | 0008 | Serial Number char. 3 and 4 | --- | --- | ASCII | F10 | char. 1 and 2 |
| | 30010 | 9 | 0009 | Serial Number char. 5 and 6 | --- | --- | ASCII | F10 | char. 1 and 2 |
| | 30011 | 10 | 000A | Serial Number char. 7 and 8 | --- | --- | ASCII | F10 | char. 1 and 2 |
| | 30012 | 11 | 000B | Manufacture Month/day | --- | --- | --- | F33 | manuf. mo./day |
| | 30013 | 12 | 000C | Manufacture year | --- | --- | --- | F34 | manuf. year |
| | 30014 | 13 | 000D | ...Reserved... | ... | ... | ... | ... | ... |
| | 30015 | 14 | 000E | Display Processor F/W Version Code | | | | F1 | current version |
| | 30016 | 15 | 000F | ...Reserved... | ... | ... | ... | ... | ... |
| STATUS | 30017 | 16 | 0010 | Switch Input Status | --- | --- | --- | F100 | N/A |
| | 30018 | 17 | 0011 | LED Status Flags 1 | --- | --- | --- | F101 | N/A |
| | 30019 | 18 | 0012 | LED Status Flags 2 | --- | --- | --- | F102 | N/A |
| | 30020 | 19 | 0013 | Operation Status Flags | --- | --- | --- | F103 | N/A |
| | 30021 | 20 | 0014 | General Alarm Active Status Flags 1 | --- | --- | --- | F104 | N/A |
| | 30022 | 21 | 0015 | General Alarm Active Status Flags 2 | --- | --- | --- | F105 | N/A |
| | 30023 | 22 | 0016 | Interlock Alarm Active Status Flags | --- | --- | --- | F106 | N/A |
| | 30024 | 23 | 0017 | General Alarm Pickup Status Flags 1 | --- | --- | --- | F104 | N/A |
| | 30025 | 24 | 0018 | General Alarm Pickup Status Flags 2 | --- | --- | --- | F105 | N/A |
| | 30026 | 25 | 0019 | Interlock Alarm Pickup Status Flags | --- | --- | --- | F106 | N/A |
| | 30027 | 26 | 001A | Interlock Close Block Status Flags | --- | --- | --- | F106 | N/A |
| | 30028 | 27 | 001B | Trip Active Status Flags 1 | --- | --- | --- | F107 | N/A |
| | 30029 | 28 | 001C | Trip Active Status Flags 2 | --- | --- | --- | F108 | N/A |
| | 30030 | 29 | 001D | Trip Pickup Status Flags 1 | --- | --- | --- | F107 | N/A |
| | 30031 | 30 | 001E | Trip Pickup Status Flags 2 | --- | --- | --- | F108 | N/A |
| | 30032 | 31 | 001F | Close Status Flags | --- | --- | --- | F109 | N/A |
| | 30033 | 32 | 0020 | Speed Status Flags | --- | --- | --- | F110 | N/A |
| | 30034 | 33 | 0021 | Interlock Open | --- | --- | --- | F5 | N/A |
| | 30035 | 34 | 0022 | Command Mode | --- | --- | --- | F6 | N/A |
| | 30036 | 35 | 0023 | Feeder Status | --- | --- | --- | F7 | N/A |
| | 30037 | 36 | 0024 | ...Reserved... | ... | ... | ... | ... | ... |
| | ↓ | ↓ | ↓ | ↓ | ↓ | ↓ | ↓ | ↓ | ↓ |
| | 30048 | 47 | 002F | ...Reserved... | ... | ... | ... | ... | ... |

Notes: * – Maximum setpoint value and 65535 represent OFF; ** – 1/Phase Current Scale Factor x A
*** – 101 represents unlimited; † – Minimum setpoint value represents OFF
†† – This register is only applicable to units with the VFD display
~* – 0.1 x A when Hi resolution mode is disabled; 0.01 x A when enabled

**TABLE 7–1: Modbus Memory Map (Sheet 2 of 11)**

| Group | Mod-icon | Address | | Description | Range | Step Value | Units / Scale | For-mat | Default Value |
|---|---|---|---|---|---|---|---|---|---|
| | | Dec | Hex | | | | | | |
| FEEDER DATA | 30049 | 48 | 0030 | Phase Current Scale Factor | --- | --- | --- | F1 | N/A |
| | 30050 | 49 | 0031 | Phase R Current | --- | --- | ** | F1 | N/A |
| | 30051 | 50 | 0032 | Phase Y Current | --- | --- | ** | F1 | N/A |
| | 30052 | 51 | 0033 | Phase B Current | --- | --- | ** | F1 | N/A |
| | 30053 | 52 | 0034 | Earth Current | --- | --- | 0.1 x A | F1 | N/A |
| | 30054 | 53 | 0035 | Feeder Load | --- | --- | %FLC | F1 | N/A |
| | 30055 | 54 | 0036 | Thermal Capacity | --- | --- | % | F1 | N/A |
| | 30056 | 55 | 0037 | Current Imbalance | --- | --- | % | F1 | N/A |
| | 30057 | 56 | 0038 | ...Reserved... | ... | ... | ... | ... | ... |
| | 30058 | 57 | 0039 | ...Reserved... | ... | ... | ... | ... | ... |
| | 30059 | 58 | 003A | ...Reserved... | ... | ... | ... | ... | ... |
| | 30060 | 59 | 003B | Power - high order | --- | --- | 0.1 x kW | F3 | N/A |
| | 30061 | 60 | 003C | Power - low order | --- | --- | 0.1 x kW | F3 | N/A |
| | 30062 | 61 | 003D | Power (scaled) | --- | --- | kW | F21 | N/A |
| | 30063 | 62 | 003E | Energy Used - high order | --- | --- | 0.1 xkWh | F2 | N/A |
| | 30064 | 63 | 003F | Energy Used - low order | --- | --- | 0.1 xkWh | F2 | N/A |
| | 30065 | 64 | 0040 | Voltage | --- | --- | V | F1 | N/A |
| | 30066 | 65 | 0041 | ...Reserved... | ... | ... | ... | ... | ... |
| | ↓ | ↓ | ↓ | ↓ | ↓ | ↓ | ↓ | ↓ | ↓ |
| | 30080 | 79 | 004F | ...Reserved... | ... | ... | ... | ... | ... |
| TRIP DATA | 30081 | 80 | 0050 | Cause of Trip | --- | --- | --- | F9 | N/A |
| | 30082 | 81 | 0051 | Time to Reset | --- | --- | min. | F1 | N/A |
| | 30083 | 82 | 0052 | Pre Trip Phase R Current | --- | --- | ** | F1 | N/A |
| | 30084 | 83 | 0053 | Pre Trip Phase Y Current | --- | --- | ** | F1 | N/A |
| | 30085 | 84 | 0054 | Pre Trip Phase B Current | --- | --- | ** | F1 | N/A |
| | 30086 | 85 | 0055 | Pre Trip Earth Current | --- | --- | 0.1 x A | F1 | N/A |
| | 30087 | 86 | 0056 | ...Reserved... | ... | ... | ... | ... | ... |
| | 30088 | 87 | 0057 | ...Reserved... | ... | ... | ... | ... | ... |
| MAINTEN-ANCE TIMERS | 30089 | 88 | 0058 | Operating Time | --- | --- | hr. | F1 | 0 |
| | 30090 | 89 | 0059 | Opened Time | --- | --- | hr. | F1 | 0 |
| | 30091 | 90 | 005A | Operating Time Since Last Close | --- | --- | hr. | F1 | 0 |
| | 30092 | 91 | 005B | ...Reserved... | ... | ... | ... | ... | ... |
| | ↓ | ↓ | ↓ | ↓ | ↓ | ↓ | ↓ | ↓ | ↓ |
| | 30110 | 109 | 006D | ...Reserved... | ... | ... | ... | ... | ... |
| MAINTEN-ANCE COUNTERS | 30097 | 96 | 0060 | Number of Operations - high order | --- | --- | --- | F2 | 0 |
| | 30098 | 97 | 0061 | Number of Operations - low order | --- | --- | --- | F2 | 0 |
| | 30099 | 98 | 0062 | Total Trips | --- | --- | --- | F1 | 0 |
| | 30100 | 99 | 0063 | ...Reserved... | ... | ... | ... | ... | ... |
| | 30101 | 100 | 0064 | ...Reserved... | ... | ... | ... | ... | ... |
| | 30102 | 101 | 0065 | Earth Fault Trips | --- | --- | --- | F1 | 0 |
| | 30103 | 102 | 0066 | ...Reserved... | ... | ... | ... | ... | ... |
| | ↓ | ↓ | ↓ | ↓ | ↓ | ↓ | ↓ | ↓ | ↓ |
| | 30107 | 106 | 006A | ...Reserved... | ... | ... | ... | ... | ... |
| | 30108 | 107 | 006B | Control Command Trips | --- | --- | --- | F1 | 0 |
| | 30109 | 108 | 006C | ...Reserved... | ... | ... | ... | ... | ... |
| | ↓ | ↓ | ↓ | ↓ | ↓ | ↓ | ↓ | ↓ | ↓ |
| | 30112 | 111 | 006F | ...Reserved... | ... | ... | ... | ... | ... |

Notes: * – Maximum setpoint value and 65535 represent OFF; ** – 1/Phase Current Scale Factor x A
*** – 101 represents unlimited; † – Minimum setpoint value represents OFF
†† – This register is only applicable to units with the VFD display
~* – 0.1 x A when Hi resolution mode is disabled; 0.01 x A when enabled

**TABLE 7–1: Modbus Memory Map (Sheet 3 of 11)**

| Group | Mod-icon | Address | | Description | Range | Step Value | Units / Scale | For-mat | Default Value |
|---|---|---|---|---|---|---|---|---|---|
| | | Dec | Hex | | | | | | |
| TIMERS | 30113 | 112 | 0070 | Undervoltage Reclose Timer | --- | --- | 0.1 x s | F1 | N/A |
| | 30114 | 113 | 0071 | Programmable Relay Timer | --- | --- | s | F1 | N/A |
| | 30115 | 114 | 0072 | ...Reserved... | ... | ... | ... | ... | ... |
| | ↓ | ↓ | ↓ | ↓ | ↓ | ↓ | ↓ | ↓ | ↓ |
| | 30128 | 127 | 007F | ...Reserved... | ... | ... | ... | ... | ... |
| DEBUG DATA | 30129 | 128 | 0080 | ADC Reference | --- | --- | --- | F1 | N/A |
| | 30130 | 129 | 0081 | ...Reserved... | ... | ... | ... | ... | ... |
| | 30131 | 130 | 0082 | Power Loss Fine Time | --- | --- | 10 ms | F1 | N/A |
| | 30132 | 131 | 0083 | Power Loss Coarse Time | --- | --- | 0.1 min | F1 | N/A |
| | 30133 | 132 | 0084 | Current key press | --- | --- | --- | F24 | N/A |
| | 30134 | 133 | 0085 | ...Reserved... | ... | ... | ... | ... | ... |
| | 30135 | 134 | 0086 | Phase R Current (fast update) | --- | --- | ** | F1 | N/A |
| | 30136 | 135 | 0087 | Phase Y Current (fast update) | --- | --- | ** | F1 | N/A |
| | 30137 | 136 | 0088 | Phase B Current (fast update) | --- | --- | ** | F1 | N/A |
| | 30138 | 137 | 0089 | Earth Current (fast update) | --- | --- | 0.1 x A | F1 | N/A |
| | 30139 | 138 | 008A | Voltage (fast update) | --- | --- | V | F1 | N/A |
| | 30140 | 139 | 008B | ...Reserved... | ... | ... | ... | ... | ... |
| | ↓ | ↓ | ↓ | ↓ | ↓ | ↓ | ↓ | ↓ | ↓ |
| | 30144 | 143 | 008F | ...Reserved... | ... | ... | ... | ... | ... |
| | 30145 | 144 | 0090 | Message Buffer characters 1 and 2 | --- | --- | ASCII | F10 | N/A |
| | 30146 | 145 | 0091 | Message Buffer characters 3 and 4 | --- | --- | ASCII | F10 | N/A |
| | 30147 | 146 | 0092 | Message Buffer characters 5 and 6 | --- | --- | ASCII | F10 | N/A |
| | 30148 | 147 | 0093 | Message Buffer characters 7 and 8 | --- | --- | ASCII | F10 | N/A |
| | 30149 | 148 | 0094 | Message Buffer characters 9 and 10 | --- | --- | ASCII | F10 | N/A |
| | 30150 | 149 | 0095 | Msg. Buffer characters 11 and 12 | --- | --- | ASCII | F10 | N/A |
| | 30151 | 150 | 0096 | Msg. Buffer characters 13 and 14 | --- | --- | ASCII | F10 | N/A |
| | 30152 | 151 | 0097 | Msg. Buffer characters 15 and 16 | --- | --- | ASCII | F10 | N/A |
| | 30153 | 152 | 0098 | Msg. Buffer characters 17 and 18 | --- | --- | ASCII | F10 | N/A |
| | 30154 | 153 | 0099 | Msg. Buffer characters 19 and 20 | --- | --- | ASCII | F10 | N/A |
| | 30155 | 154 | 009A | Msg. Buffer characters 21 and 22 | --- | --- | ASCII | F10 | N/A |
| | 30156 | 155 | 009B | Msg. Buffer characters 23 and 24 | --- | --- | ASCII | F10 | N/A |
| | 30157 | 156 | 009C | Msg. Buffer characters 25 and 26 | --- | --- | ASCII | F10 | N/A |
| | 30158 | 157 | 009D | Msg. Buffer characters 27 and 28 | --- | --- | ASCII | F10 | N/A |
| | 30159 | 158 | 009E | Msg. Buffer characters 29 and 30 | --- | --- | ASCII | F10 | N/A |
| | 30160 | 159 | 009F | Msg. Buffer characters 31 and 32 | --- | --- | ASCII | F10 | N/A |
| | 30161 | 160 | 00A0 | Msg. Buffer characters 33 and 34 | --- | --- | ASCII | F10 | N/A |
| | 30162 | 161 | 00A1 | Msg. Buffer characters 35 and 36 | --- | --- | ASCII | F10 | N/A |
| | 30163 | 162 | 00A2 | Msg. Buffer characters 37 and 38 | --- | --- | ASCII | F10 | N/A |
| | 30164 | 163 | 00A3 | Msg. Buffer characters 39 and 40 | --- | --- | ASCII | F10 | N/A |
| | 30165 | 164 | 00A4 | ...Reserved... | ... | ... | ... | ... | ... |
| | ↓ | ↓ | ↓ | ↓ | ↓ | ↓ | ↓ | ↓ | ↓ |
| | 30256 | 255 | 00FF | ...Reserved... | ... | ... | ... | ... | ... |
| USER DEFINED DATA | 30257 | 256 | 0100 | User Definable Data 0000 | | | | | |
| | 30258 | 257 | 0101 | User Definable Data 0001 | | | | | |
| | 30259 | 258 | 0102 | User Definable Data 0002 | | | | | |
| | 30260 | 259 | 0103 | User Definable Data 0003 | | | | | |
| | 30261 | 260 | 0104 | User Definable Data 0004 | | | | | |
| | 30262 | 261 | 0105 | User Definable Data 0005 | | | | | |
| | 30263 | 262 | 0106 | User Definable Data 0006 | | | | | |
| | 30264 | 263 | 0107 | User Definable Data 0007 | | | | | |

Notes: * – Maximum setpoint value and 65535 represent OFF; ** – 1/Phase Current Scale Factor x A
*** – 101 represents unlimited; † – Minimum setpoint value represents OFF
†† – This register is only applicable to units with the VFD display
~* – 0.1 x A when Hi resolution mode is disabled; 0.01 x A when enabled

**TABLE 7–1: Modbus Memory Map (Sheet 4 of 11)**

| Group | Mod-icon | Address | | Description | Range | Step Value | Units / Scale | For-mat | Default Value |
|---|---|---|---|---|---|---|---|---|---|
| | | Dec | Hex | | | | | | |
| USER DEFINED DATA con't | 30265 | 264 | 0108 | User Definable Data 0008 | | | | | |
| | 30266 | 265 | 0109 | User Definable Data 0009 | | | | | |
| | 30267 | 266 | 010A | User Definable Data 000A | | | | | |
| | 30268 | 267 | 010B | User Definable Data 000B | | | | | |
| | 30269 | 268 | 010C | User Definable Data 000C | | | | | |
| | 30270 | 269 | 010D | User Definable Data 000D | | | | | |
| | 30271 | 270 | 010E | User Definable Data 000E | | | | | |
| | 30272 | 271 | 010F | User Definable Data 000F | | | | | |
| | ↓ | ↓ | ↓ | ↓ | ↓ | ↓ | ↓ | ↓ | ↓ |
| | 30376 | 375 | 0177 | User Definable Data 0077 | | | | | |
| **Setpoint Values (Holding Registers) Addresses - 1000-1FFF** | | | | | | | | | |
| FEEDER ID | 44097 | 4096 | 1000 | Feeder Name characters 1 and 2 | 32-127 | 1 | ASCII | F10 | "MO" |
| | 44098 | 4097 | 1001 | Feeder Name characters 3 and 4 | 32-127 | 1 | ASCII | F10 | "TO" |
| | 44099 | 4098 | 1002 | Feeder Name characters 5 and 6 | 32-127 | 1 | ASCII | F10 | "R " |
| | 44100 | 4099 | 1003 | Feeder Name characters 7 and 8 | 32-127 | 1 | ASCII | F10 | " " |
| | 44101 | 4100 | 1004 | Feeder Name characters 9 and 10 | 32-127 | 1 | ASCII | F10 | " " |
| | 44102 | 4101 | 1005 | Feeder Name characters 11 and 12 | 32-127 | 1 | ASCII | F10 | " " |
| | 44103 | 4102 | 1006 | Feeder Name characters 13 and 14 | 32-127 | 1 | ASCII | F10 | " " |
| | 44104 | 4103 | 1007 | Feeder Name characters 15 and 16 | 32-127 | 1 | ASCII | F10 | " " |
| | 44105 | 4104 | 1008 | Feeder Name characters 17 and 18 | 32-127 | 1 | ASCII | F10 | " " |
| | 44106 | 4105 | 1009 | Feeder Name characters 19 and 20 | 32-127 | 1 | ASCII | F10 | " " |
| | 44107 | 4106 | 100A | Feeder Rating | 1-2501 | 1 | A | F1* | 100 |
| | 44108 | 4107 | 100B | ...Reserved... | ... | ... | ... | ... | ... |
| | 44109 | 4108 | 100C | System Supply Voltage | 110-12000 | 1 | V | F1 | 415 |
| | 44110 | 4109 | 100D | ...Reserved... | ... | ... | ... | ... | ... |
| | 44111 | 4110 | 100E | ...Reserved... | ... | ... | ... | ... | ... |
| | 44112 | 4111 | 100F | ...Reserved... | ... | ... | ... | ... | ... |
| | 44113 | 4112 | 1010 | Feeder Type | 2-8 | --- | --- | F11 | 2 = Contactor |
| | 44114 | 4113 | 1011 | ...Reserved... | ... | ... | ... | ... | ... |
| | 44115 | 4114 | 1012 | ACB Pulse Time | 5-600 | 5 | 0.1 x s | F1* | 5 = 0.5 s |
| | 44116 | 4114 | 1013 | ...Reserved... | ... | ... | ... | ... | ... |
| | ↓ | ↓ | ↓ | ↓ | ↓ | ↓ | ↓ | ↓ | ↓ |
| | 44128 | 4127 | 101F | ...Reserved... | ... | ... | ... | ... | ... |
| CT/VT INPUTS | 44129 | 4128 | 1020 | Phase CT Primary | 1-2500 | 1 | A | F1† | 100 |
| | 44130 | 4129 | 1021 | ...Reserved... | ... | ... | ... | ... | ... |
| | 44131 | 4130 | 1022 | Phase CT Connection Type | 0-1 | 1 | --- | F12 | 0 = 3 CTs |
| | 44132 | 4131 | 1023 | Earth Fault CT Input | 0-1 | 1 | --- | F13 | 0=50:0.025 |
| | 44133 | 4132 | 1024 | VT Primary Voltage | 110-12001 | 1 | --- | F1* | 12001 = OFF |
| | 44134 | 4133 | 1025 | VT Connection Type | 0-1 | 1 | --- | F15 | 0= Phase (A-N) |
| | 44135 | 4134 | 1026 | VT Secondary Voltage | 110-240 | 10 | V | F1 | 110 |
| | 44136 | 4135 | 1027 | Nominal Frequency | 50-60 | 10 | Hz | F1 | 50 |
| | 44137 | 4136 | 1028 | ...Reserved... | ... | ... | ... | ... | ... |
| | ↓ | ↓ | ↓ | ↓ | ↓ | ↓ | ↓ | ↓ | ↓ |
| | 44144 | 4143 | 102F | ...Reserved... | ... | ... | ... | ... | ... |
| FAULT MODE | 44145 | 4144 | 1030 | Internal Fault Trip | 0-1 | 1 | --- | F14 | 1 = ENABLE |
| | 44146 | 4145 | 1031 | Serial Comms Failure Trip | 5-30 | 5 | --- | F1* | 30 = OFF |
| | 44147 | 4146 | 1032 | Serial Comms Failure Alarm | 5-30 | 5 | --- | F1* | 30 = OFF |
| | 44148 | 4147 | 1033 | ...Reserved... | ... | ... | ... | ... | ... |
| | ↓ | ↓ | ↓ | ↓ | ↓ | ↓ | ↓ | ↓ | ↓ |
| | 44152 | 4151 | 1037 | ...Reserved... | ... | ... | ... | ... | ... |

Notes: * – Maximum setpoint value and 65535 represent OFF; ** – 1/Phase Current Scale Factor x A
*** – 101 represents unlimited; † – Minimum setpoint value represents OFF
†† – This register is only applicable to units with the VFD display
~* – 0.1 x A when Hi resolution mode is disabled; 0.01 x A when enabled

**TABLE 7–1: Modbus Memory Map (Sheet 5 of 11)**

| Group | Mod-icon | Address | | Description | Range | Step Value | Units / Scale | For-mat | Default Value |
|---|---|---|---|---|---|---|---|---|---|
| | | Dec | Hex | | | | | | |
| FEEDER PROTEC-TION THERMAL | 44153 | 4152 | 1038 | ...Reserved... | ... | ... | ... | ... | ... |
| | 44154 | 4153 | 1039 | ...Reserved... | ... | ... | ... | ... | ... |
| | 44155 | 4154 | 103A | Overload Curve Number | 0-3 | 1 | --- | F28 | 0 |
| | 44156 | 4155 | 103B | ...Reserved... | ... | ... | ... | ... | ... |
| | 44157 | 4156 | 103C | ...Reserved... | ... | ... | ... | ... | ... |
| | 44158 | 4157 | 103D | ...Reserved... | ... | ... | ... | ... | ... |
| | 44159 | 4158 | 103E | ...Reserved... | ... | ... | ... | ... | ... |
| | 44160 | 4159 | 103F | Curve Multiplier | 5-10 | 1 | 0.1 | F1 | 10 = 1.0 |
| FEEDER PROTEC-TION EARTH FAULT | 44161 | 4160 | 1040 | Earth Fault Alarm Level (5 A CT) | 10-105 | 5 | % FLC | F1* | 65535 = OFF |
| | 44162 | 4161 | 1041 | Earth Fault Alarm Level (50:0.025 CT) | 5-155 | 5 | 0.1 x A | F1* | 65535 = OFF |
| | 44163 | 4162 | 1042 | Earth Fault Alarm Delay | 1-60 | 1 | s | F1 | 10 |
| | 44164 | 4163 | 1043 | Earth Fault Trip Level (residual) | 10-105 | 5 | % FLC | F1* | 65535 = OFF |
| | 44165 | 4164 | 1044 | Earth Fault Trip Level (50:0.025 CT) | 5-155 | 5 | 0.1 x A | F1* | 65535 = OFF |
| | 44166 | 4165 | 1045 | Earth Fault Trip Delay | 0-50 | 1 | 0.1 x s | F1 | 10 = 1.0 |
| | 44167 | 4166 | 1046 | ...Reserved... | ... | ... | ... | ... | ... |
| | ↓ | ↓ | ↓ | ↓ | ↓ | ↓ | ↓ | ↓ | ↓ |
| | 44192 | 4191 | 105F | ...Reserved... | ... | ... | ... | ... | ... |
| CONFIG. INPUTS | 44193 | 4192 | 1060 | Interlock Input 1 Function | 0-27 | 1 | --- | F17 | 0 = NOT USED |
| | 44194 | 4193 | 1061 | Startup Override Delay | 0-126 | 1 | s | F1* | 0 |
| | 44195 | 4194 | 1062 | Running Override Delay | 0-126 | 1 | s | F1* | 0 |
| | 44196 | 4195 | 1063 | Operation | 0-1 | 1 | --- | F18 | 0 = IL STOP |
| | 44197 | 4196 | 1064 | Instantaneous Alarm | 0-1 | 1 | --- | F14 | 0 = DISABLE |
| | 44198 | 4197 | 1065 | ...Reserved... | ... | ... | ... | ... | ... |
| | 44199 | 4198 | 1066 | ...Reserved... | ... | ... | ... | ... | ... |
| | 44200 | 4199 | 1067 | ...Reserved... | ... | ... | ... | ... | ... |
| | 44201 | 4200 | 1068 | Interlock Input 2 Function | 0-27 | 1 | --- | F17 | 0 = NOT USED |
| | 44202 | 4201 | 1069 | Startup Override Delay | 0-126 | 1 | s | F1* | 0 |
| | 44203 | 4202 | 106A | Running Override Delay | 0-126 | 1 | s | F1* | 0 |
| | 44204 | 4203 | 106B | Operation | 0-1 | 1 | --- | F18 | 0 = IL STOP |
| | 44205 | 4204 | 106C | Instantaneous Alarm | 0-1 | 1 | --- | F14 | 0 = DISABLE |
| | 44206 | 4205 | 106D | ...Reserved... | ... | ... | ... | ... | ... |
| | 44207 | 4206 | 106E | ...Reserved... | ... | ... | ... | ... | ... |
| | 44208 | 4207 | 106F | ...Reserved... | ... | ... | ... | ... | ... |
| | 44209 | 4208 | 1070 | Interlock Input 3 Function | 0-27 | 1 | --- | F17 | 0 = NOT USED |
| | 44210 | 4209 | 1071 | Startup Override Delay | 0-126 | 1 | s | F1* | 0 |
| | 44211 | 4210 | 1072 | Running Override Delay | 0-126 | 1 | s | F1* | 0 |
| | 44212 | 4211 | 1073 | Operation | 0-1 | 1 | --- | F18 | 0 = IL STOP |
| | 44213 | 4212 | 1074 | Instantaneous Alarm | 0-1 | 1 | --- | F14 | 0 = DISABLE |
| | 44214 | 4213 | 1075 | ...Reserved... | ... | ... | ... | ... | ... |
| | 44215 | 4214 | 1076 | ...Reserved... | ... | ... | ... | ... | ... |
| | 44216 | 4215 | 1077 | ...Reserved... | ... | ... | ... | ... | ... |
| | 44217 | 4216 | 1078 | Interlock Input 4 Function | 0-27 | 1 | --- | F17 | 0 = NOT USED |
| | 44218 | 4217 | 1079 | Startup Override Delay | 0-126 | 1 | s | F1* | 0 |
| | 44219 | 4218 | 107A | Running Override Delay | 0-126 | 1 | s | F1* | 0 |
| | 44220 | 4219 | 107B | Operation | 0-1 | 1 | --- | F18 | 0 = IL STOP |
| | 44221 | 4220 | 107C | Instantaneous Alarm | 0-1 | 1 | --- | F14 | 0 = DISABLE |
| | 44222 | 4221 | 107D | ...Reserved... | ... | ... | ... | ... | ... |
| | 44223 | 4222 | 107E | ...Reserved... | ... | ... | ... | ... | ... |
| | 44224 | 4223 | 107F | ...Reserved... | ... | ... | ... | ... | ... |
| | 44225 | 4224 | 1080 | Interlock Input 5 Function | 0-27 | 1 | --- | F17 | 0 = NOT USED |

Notes: * – Maximum setpoint value and 65535 represent OFF; ** – 1/Phase Current Scale Factor x A
*** – 101 represents unlimited; † – Minimum setpoint value represents OFF
†† – This register is only applicable to units with the VFD display
~* – 0.1 x A when Hi resolution mode is disabled; 0.01 x A when enabled

**TABLE 7–1: Modbus Memory Map (Sheet 6 of 11)**

| Group | Mod-icon | Address | | Description | Range | Step Value | Units / Scale | For-mat | Default Value |
|---|---|---|---|---|---|---|---|---|---|
| | | Dec | Hex | | | | | | |
| CONFIG. INPUTS con't | 44226 | 4225 | 1081 | Startup Override Delay | 0-126 | 1 | s | F1* | 0 |
| | 44227 | 4226 | 1082 | Running Override Delay | 0-126 | 1 | s | F1* | 0 |
| | 44228 | 4227 | 1083 | Operation | 0-1 | 1 | --- | F18 | 0 = IL STOP |
| | 44229 | 4228 | 1084 | Instantaneous Alarm | 0-1 | 1 | --- | F14 | 0 = DISABLE |
| | 44230 | 4229 | 1085 | ...Reserved... | ... | ... | ... | ... | ... |
| | 44231 | 4230 | 1086 | ...Reserved... | ... | ... | ... | ... | ... |
| | 44232 | 4231 | 1087 | ...Reserved... | ... | ... | ... | ... | ... |
| | 44233 | 4232 | 1088 | Interlock Input 6 Function | 0-27 | 1 | --- | F17 | 0 = NOT USED |
| | 44234 | 4233 | 1089 | Startup Override Delay | 0-126 | 1 | s | F1 * | 0 |
| | 44235 | 4234 | 108A | Running Override Delay | 0-126 | 1 | s | F1* | 0 |
| | 44236 | 4235 | 108B | Operation | 0-1 | 1 | --- | F18 | 0 = IL STOP |
| | 44237 | 4236 | 108C | Instantaneous Alarm | 0-1 | 1 | --- | F14 | 0 = DISABLE |
| | 44238 | 4237 | 108D | ...Reserved... | ... | ... | ... | ... | ... |
| | 44239 | 4238 | 108E | ...Reserved... | ... | ... | ... | ... | ... |
| | 44240 | 4239 | 108F | ...Reserved... | ... | ... | ... | ... | ... |
| | 44241 | 4240 | 1090 | Interlock Input 7 Function | 0-27 | 1 | --- | F17 | 0 = NOT USED |
| | 44242 | 4241 | 1091 | Startup Override Delay | 0-126 | 1 | s | F1* | 0 |
| | 44243 | 4242 | 1092 | Running Override Delay | 0-126 | 1 | s | F1* | 0 |
| | 44244 | 4243 | 1093 | Operation | 0-1 | 1 | --- | F18 | 0 = IL STOP |
| | 44245 | 4244 | 1094 | Instantaneous Alarm | 0-1 | 1 | --- | F14 | 0 = DISABLE |
| | 44246 | 4245 | 1095 | ...Reserved... | ... | ... | ... | ... | ... |
| | 44247 | 4246 | 1096 | ...Reserved... | ... | ... | ... | ... | ... |
| | 44248 | 4247 | 1097 | ...Reserved... | ... | ... | ... | ... | ... |
| | 44249 | 4248 | 1098 | Interlock Input 8 Function | 0-27 | 1 | --- | F17 | 0 = NOT USED |
| | 44250 | 4249 | 1099 | Startup Override Delay | 0-126 | 1 | s | F1* | 0 |
| | 44251 | 4250 | 109A | Running Override Delay | 0-126 | 1 | s | F1* | 0 |
| | 44252 | 4251 | 109B | Operation | 0-1 | 1 | --- | F18 | 0 = IL STOP |
| | 44253 | 4252 | 109C | Instantaneous Alarm | 0-1 | 1 | --- | F14 | 0 = DISABLE |
| | 44254 | 4253 | 109D | ...Reserved... | ... | ... | ... | ... | ... |
| | 44255 | 4254 | 109E | ...Reserved... | ... | ... | ... | ... | ... |
| | 44256 | 4255 | 109F | ...Reserved... | ... | ... | ... | ... | ... |
| | 44257 | 4256 | 10A0 | Interlock Input 9 Function | 0-27 | 1 | --- | F17 | 0 = NOT USED |
| | 44258 | 4257 | 10A1 | Startup Override Delay | 0-126 | 1 | s | F1* | 0 |
| | 44259 | 4258 | 10A2 | Running Override Delay | 0-126 | 1 | s | F1* | 0 |
| | 44260 | 4259 | 10A3 | Operation | 0-1 | 1 | --- | F18 | 0 = IL STOP |
| | 44261 | 4260 | 10A4 | Instantaneous Alarm | 0-1 | 1 | --- | F14 | 0 = DISABLE |
| | 44262 | 4261 | 10A5 | ...Reserved... | ... | ... | ... | ... | ... |
| | 44263 | 4262 | 10A6 | ...Reserved... | ... | ... | ... | ... | ... |
| | 44264 | 4263 | 10A7 | ...Reserved... | ... | ... | ... | ... | ... |
| | 44265 | 4264 | 10A8 | Interlock Input 10 Function | 0-27 | 1 | --- | F17 | 0 = NOT USED |
| | 44266 | 4265 | 10A9 | Startup Override Delay | 0-126 | 1 | s | F1* | 0 |
| | 44267 | 4266 | 10AA | Running Override Delay | 0-126 | 1 | s | F1* | 0 |
| | 44268 | 4267 | 10AB | Operation | 0-1 | 1 | --- | F18 | 0 = IL STOP |
| | 44269 | 4268 | 10AC | Instantaneous Alarm | 0-1 | 1 | --- | F14 | 0 = DISABLE |
| | 44270 | 4269 | 10AD | ...Reserved... | ... | ... | ... | ... | ... |
| | 44271 | 4270 | 10AE | ...Reserved... | ... | ... | ... | ... | ... |
| | 44272 | 4271 | 10AF | ...Reserved... | ... | ... | ... | ... | ... |

Notes: * – Maximum setpoint value and 65535 represent OFF; ** – 1/Phase Current Scale Factor x A
*** – 101 represents unlimited; † – Minimum setpoint value represents OFF
†† – This register is only applicable to units with the VFD display
~* – 0.1 x A when Hi resolution mode is disabled; 0.01 x A when enabled

**TABLE 7–1: Modbus Memory Map (Sheet 7 of 11)**

| Group | Mod-icon | Address | | Description | Range | Step Value | Units / Scale | For-mat | Default Value |
|---|---|---|---|---|---|---|---|---|---|
| | | Dec | Hex | | | | | | |
| PROCESS INTERLOCK NAMES | 44273 | 4272 | 10B0 | Process Intlk A Name chars 1 and 2 | 32-127 | 1 | ASCII | F10 | "PR" |
| | 44274 | 4273 | 10B1 | Process Intlk A Name chars 3 and 4 | 32-127 | 1 | ASCII | F10 | "OC" |
| | 44275 | 4274 | 10B2 | Process Intlk A Name chars 5 and 6 | 32-127 | 1 | ASCII | F10 | "ES" |
| | 44276 | 4275 | 10B3 | Process Intlk A Name chars 7 and 8 | 32-127 | 1 | ASCII | F10 | "S " |
| | 44277 | 4276 | 10B4 | Process Intlk A Name chars 9 and 10 | 32-127 | 1 | ASCII | F10 | "IN" |
| | 44278 | 4277 | 10B5 | Process Intlk A Name chars 11 and 12 | 32-127 | 1 | ASCII | F10 | "TE" |
| | 44279 | 4278 | 10B6 | Process Intlk A Name chars 13 and 14 | 32-127 | 1 | ASCII | F10 | "RL" |
| | 44280 | 4279 | 10B7 | Process Intlk A Name chars 15 and 16 | 32-127 | 1 | ASCII | F10 | "OC" |
| | 44281 | 4280 | 10B8 | Process Intlk A Name chars 17 and 18 | 32-127 | 1 | ASCII | F10 | "K " |
| | 44282 | 4281 | 10B9 | Process Intlk A Name chars 19 and 20 | 32-127 | 1 | ASCII | F10 | "A " |
| | 44283 | 4282 | 10BA | ...Reserved... | ... | ... | ... | ... | ... |
| | ↓ | ↓ | ↓ | ↓ | ↓ | ↓ | ↓ | ↓ | ↓ |
| | 44288 | 4287 | 10BF | ...Reserved... | ... | ... | ... | ... | ... |
| | 44289 | 4288 | 10C0 | Process Intlk B Name chars 1 and 2 | 32-127 | 1 | ASCII | F10 | "PR" |
| | 44290 | 4289 | 10C1 | Process Intlk B Name chars 3 and 4 | 32-127 | 1 | ASCII | F10 | "OC" |
| | 44291 | 4290 | 10C2 | Process Intlk B Name chars 5 and 6 | 32-127 | 1 | ASCII | F10 | "ES" |
| | 44292 | 4291 | 10C3 | Process Intlk B Name chars 7 and 8 | 32-127 | 1 | ASCII | F10 | "S " |
| | 44293 | 4292 | 10C4 | Process Intlk B Name chars 9 and 10 | 32-127 | 1 | ASCII | F10 | "IN" |
| | 44294 | 4293 | 10C5 | Process Intlk B Name chars 11 and 12 | 32-127 | 1 | ASCII | F10 | "TE" |
| | 44295 | 4294 | 10C6 | Process Intlk B Name chars 13 and 14 | 32-127 | 1 | ASCII | F10 | "RL" |
| | 44296 | 4295 | 10C7 | Process Intlk B Name chars 15 and 16 | 32-127 | 1 | ASCII | F10 | "OC" |
| | 44297 | 4296 | 10C8 | Process Intlk B Name chars 17 and 18 | 32-127 | 1 | ASCII | F10 | "K " |
| | 44298 | 4297 | 10C9 | Process Intlk B Name chars 19 and 20 | 32-127 | 1 | ASCII | F10 | "B " |
| | 44299 | 4298 | 10CA | ...Reserved... | ... | ... | ... | ... | ... |
| | ↓ | ↓ | ↓ | ↓ | ↓ | ↓ | ↓ | ↓ | ↓ |
| | 44304 | 4303 | 10CF | ...Reserved... | ... | ... | ... | ... | ... |
| | 44305 | 4304 | 10D0 | Process Intlk C Name chars 1 and 2 | 32-127 | 1 | ASCII | F10 | "PR" |
| | 44306 | 4305 | 10D1 | Process Intlk C Name chars 3 and 4 | 32-127 | 1 | ASCII | F10 | "OC" |
| | 44307 | 4306 | 10D2 | Process Intlk C Name chars 5 and 6 | 32-127 | 1 | ASCII | F10 | "ES" |
| | 44308 | 4307 | 10D3 | Process Intlk C Name chars 7 and 8 | 32-127 | 1 | ASCII | F10 | "S " |
| | 44309 | 4308 | 10D4 | Process Intlk C Name chars 9 and 10 | 32-127 | 1 | ASCII | F10 | "IN" |
| | 44310 | 4309 | 10D5 | Process Intlk C Name chars 11 and 12 | 32-127 | 1 | ASCII | F10 | "TE" |
| | 44311 | 4310 | 10D6 | Process Intlk C Name chars 13 and 14 | 32-127 | 1 | ASCII | F10 | "RL" |
| | 44312 | 4311 | 10D7 | Process Intlk C Name chars 15 and 16 | 32-127 | 1 | ASCII | F10 | "OC" |
| | 44313 | 4312 | 10D8 | Process Intlk C Name chars 17 and 18 | 32-127 | 1 | ASCII | F10 | "K " |
| | 44314 | 4313 | 10D9 | Process Intlk C Name chars 19 and 20 | 32-127 | 1 | ASCII | F10 | "C " |
| | 44315 | 4314 | 10DA | ...Reserved... | ... | ... | ... | ... | ... |
| | ↓ | ↓ | ↓ | ↓ | ↓ | ↓ | ↓ | ↓ | ↓ |
| | 44320 | 4319 | 10DF | ...Reserved... | ... | ... | ... | ... | ... |
| | 44321 | 4320 | 10E0 | Process Intlk D Name chars 1 and 2 | 32-127 | 1 | ASCII | F10 | "PR" |
| | 44322 | 4321 | 10E1 | Process Intlk D Name chars 3 and 4 | 32-127 | 1 | ASCII | F10 | "OC" |
| | 44323 | 4322 | 10E2 | Process Intlk D Name chars 5 and 6 | 32-127 | 1 | ASCII | F10 | "ES" |
| | 44324 | 4323 | 10E3 | Process Intlk D Name chars 7 and 8 | 32-127 | 1 | ASCII | F10 | "S " |
| | 44325 | 4324 | 10E4 | Process Intlk D Name chars 9 and 10 | 32-127 | 1 | ASCII | F10 | "IN" |
| | 44326 | 4325 | 10E5 | Process Intlk D Name chars 11 and 12 | 32-127 | 1 | ASCII | F10 | "TE" |
| | 44327 | 4326 | 10E6 | Process Intlk D Name chars 13 and 14 | 32-127 | 1 | ASCII | F10 | "RL" |
| | 44328 | 4327 | 10E7 | Process Intlk D Name chars 15 and 16 | 32-127 | 1 | ASCII | F10 | "OC" |
| | 44329 | 4328 | 10E8 | Process Intlk D Name chars 17 and 18 | 32-127 | 1 | ASCII | F10 | "K " |
| | 44330 | 4329 | 10E9 | Process Intlk D Name chars 19 and 20 | 32-127 | 1 | ASCII | F10 | "D " |

Notes: * – Maximum setpoint value and 65535 represent OFF; ** – 1/Phase Current Scale Factor x A
*** – 101 represents unlimited; † – Minimum setpoint value represents OFF
†† – This register is only applicable to units with the VFD display
~* – 0.1 x A when Hi resolution mode is disabled; 0.01 x A when enabled

**TABLE 7–1: Modbus Memory Map (Sheet 8 of 11)**

| Group | Mod-icon | Address | | Description | Range | Step Value | Units / Scale | For-mat | Default Value |
|---|---|---|---|---|---|---|---|---|---|
| | | Dec | Hex | | | | | | |
| | 44331 | 4330 | 10EA | ...Reserved... | ... | ... | ... | ... | ... |
| | ↓ | ↓ | ↓ | ↓ | ↓ | ↓ | ↓ | ↓ | ↓ |
| | 44336 | 4335 | 10EF | ...Reserved... | ... | ... | ... | ... | ... |
| FIELD OPEN | 44337 | 4336 | 10F0 | Field Open Mode | 0-1 | | --- | F19 | 0=Unlatched |
| | 44338 | 4337 | 10F1 | ESD Open Mode | 0-1 | | --- | F19 | 0=Unlatched |
| | 44339 | 4338 | 10F2 | Faceplate Open | 0-1 | | --- | F19 | 0=Unlatched |
| | 44340 | 4339 | 10F3 | Process Open | 0-1 | | --- | F19 | 0=Unlatched |
| | 44341 | 4340 | 10F4 | ...Reserved... | ... | ... | ... | ... | ... |
| | ↓ | ↓ | ↓ | ↓ | ↓ | ↓ | ↓ | ↓ | ↓ |
| | 44384 | 4383 | 111F | ...Reserved... | ... | ... | ... | ... | ... |
| UNDER-VOLTAGE AUTO RECLOSE | 44385 | 4384 | 1120 | Undervoltage Reclose | 0-1 | 1 | --- | F14 | 1 = ENABLE |
| | 44386 | 4385 | 1121 | Immediate Reclose Power Loss Time | 100-520 | 20 | ms | F1* | 200 |
| | 44387 | 4386 | 1122 | Delay 1 Reclose Power Loss Time | 1-101 | 1 | 0.1 x s | F1*** | 20 = 2.0 s |
| | 44388 | 4387 | 1123 | Delay 1 Reclose Time Delay | 2-3000 | 2 | 0.1 x s | F1 | 20 = 2.0 s |
| | 44389 | 4388 | 1124 | Delay 2 Reclose Power Loss Time | 5-605 | 5 | 0.1 x min | F1* | 65535 = OFF |
| | 44390 | 4389 | 1125 | Delay 2 Reclose Time Delay | 2-3002 | 2 | 0.1 x s | F1* | 65535 = OFF |
| | 44391 | 4390 | 1126 | ...Reserved... | ... | ... | ... | ... | ... |
| | 44392 | 4391 | 1127 | ...Reserved... | ... | ... | ... | ... | ... |
| PROGRA-MMABLE RELAY | 44393 | 4392 | 1128 | Programmable Relay 1 Function | 0-33 | 1 | --- | F20 | 1 = TRIPS |
| | 44394 | 4393 | 1129 | Programmable Relay 1 Delay | 0-125 | 1 | s | F1 | 5 |
| | 44395 | 4394 | 112A | Energise on Feeder Close Delay | 0-125 | 1 | s | F1 | 5 |
| | 44396 | 4395 | 112B | De-Energise on Feeder Open Delay | 0-125 | 1 | s | F1 | 5 |
| | 44397 | 4396 | 112C | Load Sensing | 10-101 | 1 | %FLC | F1* | 65535 = OFF |
| | 44398 | 4397 | 112D | ...Reserved... | ... | ... | ... | ... | ... |
| | ↓ | ↓ | ↓ | ↓ | ↓ | ↓ | ↓ | ↓ | ↓ |
| | 44401 | 4400 | 1130 | ...Reserved... | ... | ... | ... | ... | ... |
| MONITOR-ING | 44402 | 4401 | 1131 | Contactor Inspection Interval | 50-10010 | 10 | × 1000 op | F1* | 65535 = OFF |
| | 44403 | 4402 | 1132 | ...Reserved... | ... | ... | ... | ... | ... |
| | | | | ↓ | ↓ | ↓ | ↓ | ↓ | ↓ |
| | 44408 | 4407 | 1137 | ...Reserved... | ... | ... | ... | ... | ... |
| FACTORY SERVICE | 44409 | 4408 | 1138 | Reset Lockout Using RESET Key | 0-1 | 1 | --- | F14 | 1 = ENABLE |
| COMMS | 44410 | 4409 | 1139 | Modbus Baud Rate | 0-4 | 1 | --- | F25 | 4 = 19200 |
| FACTORY SERVICE | 44411 | 4410 | 113A | Manual/Auto Keys | 0-1 | 1 | --- | F14 | 1 = Enable |
| | 44412 | 4411 | 113B | Close A Key | 0-1 | 1 | --- | F14 | 1 = Enable |
| | 44413 | 4412 | 113C | Close B Key | 0-1 | 1 | --- | F14 | 1 = Enable |
| | 44414 | 4413 | 113D | Close Switch Input | 0-1 | 1 | --- | F14 | 1 = Enable |
| UV | 44415 | 4414 | 113E | Undervoltage Pickup Level | 300-950 | 1 | --- | F1 | 900 |
| | 44416 | 4415 | 113F | ...Reserved... | ... | ... | ... | ... | ... |
| | ↓ | ↓ | ↓ | ↓ | ↓ | ↓ | ↓ | ↓ | ↓ |
| | 44424 | 4423 | 1147 | ...Reserved... | ... | ... | ... | ... | ... |
| FLASH MESSAGE | 44425 | 4424 | 1148 | Flash message characters 1 and 2 | 32-255 | 1 | ASCII | F10 | " " |
| | 44426 | 4425 | 1149 | Flash message characters 3 and 4 | 32-255 | 1 | ASCII | F10 | " " |
| | 44427 | 4426 | 114A | Flash message characters 5 and 6 | 32-255 | 1 | ASCII | F10 | " " |
| | 44428 | 4427 | 114B | Flash message characters 7 and 8 | 32-255 | 1 | ASCII | F10 | " " |
| | 44429 | 4428 | 114C | Flash message characters 9 and 10 | 32-255 | 1 | ASCII | F10 | " " |
| | 44430 | 4429 | 114D | Flash message characters 11 and 12 | 32-255 | 1 | ASCII | F10 | " " |
| | 44431 | 4430 | 114E | Flash message characters 13 and 14 | 32-255 | 1 | ASCII | F10 | " " |
| | 44432 | 4431 | 114F | Flash message characters 15 and 16 | 32-255 | 1 | ASCII | F10 | " " |
| | 44433 | 4432 | 1150 | Flash message characters 17 and 18 | 32-255 | 1 | ASCII | F10 | " " |

Notes: * – Maximum setpoint value and 65535 represent OFF; ** – 1/Phase Current Scale Factor x A
*** – 101 represents unlimited; † – Minimum setpoint value represents OFF
†† – This register is only applicable to units with the VFD display
~* – 0.1 x A when Hi resolution mode is disabled; 0.01 x A when enabled

**TABLE 7–1: Modbus Memory Map (Sheet 9 of 11)**

| Group | Mod-icon | Address | | Description | Range | Step Value | Units / Scale | For-mat | Default Value |
|---|---|---|---|---|---|---|---|---|---|
| | | Dec | Hex | | | | | | |
| FLASH MESSAGE continued | 44434 | 4433 | 1151 | Flash message characters 19 and 20 | 32-255 | 1 | ASCII | F10 | " " |
| | 44435 | 4434 | 1152 | Flash message characters 21 and 22 | 32-255 | 1 | ASCII | F10 | " " |
| | 44436 | 4435 | 1153 | Flash message characters 23 and 24 | 32-255 | 1 | ASCII | F10 | " " |
| | 44437 | 4436 | 1154 | Flash message characters 25 and 26 | 32-255 | 1 | ASCII | F10 | " " |
| | 44438 | 4437 | 1155 | Flash message characters 27 and 28 | 32-255 | 1 | ASCII | F10 | " " |
| | 44439 | 4438 | 1156 | Flash message characters 29 and 30 | 32-255 | 1 | ASCII | F10 | " " |
| | 44440 | 4439 | 1157 | Flash message characters 31 and 32 | 32-255 | 1 | ASCII | F10 | " " |
| | 44441 | 4440 | 1158 | Flash message characters 33 and 34 | 32-255 | 1 | ASCII | F10 | " " |
| | 44442 | 4441 | 1159 | Flash message characters 35 and 36 | 32-255 | 1 | ASCII | F10 | " " |
| | 44443 | 4442 | 115A | Flash message characters 37 and 38 | 32-255 | 1 | ASCII | F10 | " " |
| | 44444 | 4443 | 115B | Flash message characters 39 and 40 | 32-255 | 1 | ASCII | F10 | " " |
| | 44445 | 4444 | 115C | ...Reserved... | ... | ... | ... | ... | ... |
| | ↓ | ↓ | ↓ | ↓ | ↓ | ↓ | ↓ | ↓ | ↓ |
| | 44448 | 4447 | 115F | ...Reserved... | ... | ... | ... | ... | ... |
| COM-MANDS | 44449 | 4448 | 1160 | Command Function Code | 5 | --- | --- | F1 | 5 |
| | 44450 | 4449 | 1161 | Command Operation Code | 1-32 | 1 | --- | F22 | 0 |
| | 44451 | 4450 | 1162 | Command Data 1 | 0-65535 | 1 | --- | F1/F23/F26 | 0 |
| | 44452 | 4451 | 1163 | Command Data 2 | 0-65535 | 1 | --- | F1 | 0 |
| | 44453 | 4452 | 1164 | Command Data 3 | 0-65535 | 1 | --- | F1 | 0 |
| | 44454 | 4453 | 1165 | Command Data 4 | 0-65535 | 1 | --- | F1 | 0 |
| | 44455 | 4454 | 1166 | Command Data 5 | 0-65535 | 1 | --- | F1 | 0 |
| | 44456 | 4455 | 1167 | Command Data 6 | 0-65535 | 1 | --- | F1 | 0 |
| | 44457 | 4456 | 1168 | Command Data 7 | 0-65535 | 1 | --- | F1 | 0 |
| | 44458 | 4457 | 1169 | Command Data 8 | 0-65535 | 1 | --- | F1 | 0 |
| | 44459 | 4458 | 116A | Command Data 9 | 0-65535 | 1 | --- | F1 | 0 |
| | 44460 | 4459 | 116B | Command Data 10 | 0-65535 | 1 | --- | F1 | 0 |
| | 44461 | 4460 | 116C | ...Reserved... | ... | ... | ... | ... | ... |
| | ↓ | ↓ | ↓ | ↓ | ↓ | ↓ | ↓ | ↓ | ↓ |
| | 44464 | 4463 | 116F | ...Reserved... | ... | ... | ... | ... | ... |
| PROCESS INTERLOCK NAMES | 44465 | 4464 | 1170 | Process Intlk E Name chars 1 and 2 | 32-127 | 1 | ASCII | F10 | "PR" |
| | 44466 | 4465 | 1171 | Process Intlk E Name chars 3 and 4 | 32-127 | 1 | ASCII | F10 | "OC" |
| | 44467 | 4466 | 1172 | Process Intlk E Name chars 5 and 6 | 32-127 | 1 | ASCII | F10 | "ES" |
| | 44468 | 4467 | 1173 | Process Intlk E Name chars 7 and 8 | 32-127 | 1 | ASCII | F10 | "S " |
| | 44469 | 4468 | 1174 | Process Intlk E Name chars 9 and 10 | 32-127 | 1 | ASCII | F10 | "IN" |
| | 44470 | 4469 | 1175 | Process Intlk E Name chars 11 and 12 | 32-127 | 1 | ASCII | F10 | "TE" |
| | 44471 | 4470 | 1176 | Process Intlk E Name chars 13 and 14 | 32-127 | 1 | ASCII | F10 | "RL" |
| | 44472 | 4471 | 1177 | Process Intlk E Name chars 15 and 16 | 32-127 | 1 | ASCII | F10 | "OC" |
| | 44473 | 4472 | 1178 | Process Intlk E Name chars 17 and 18 | 32-127 | 1 | ASCII | F10 | "K " |
| | 44474 | 4460 | 116C | Process Intlk E Name chars 19 and 20 | 32-127 | 1 | ASCII | F10 | "E " |
| | 44475 | 4461 | 116D | ...Reserved... | ... | ... | ... | ... | ... |
| | ↓ | ↓ | ↓ | ↓ | ↓ | ↓ | ↓ | ↓ | ↓ |
| | 44480 | 4479 | 117F | ...Reserved... | ... | ... | ... | ... | ... |
| | 44481 | 4480 | 1180 | Process Intlk F Name chars 1 and 2 | 32-127 | 1 | ASCII | F10 | "PR" |
| | 44482 | 4481 | 1181 | Process Intlk F Name chars 3 and 4 | 32-127 | 1 | ASCII | F10 | "OC" |
| | 44483 | 4482 | 1182 | Process Intlk F Name chars 5 and 6 | 32-127 | 1 | ASCII | F10 | "ES" |
| | 44484 | 4483 | 1183 | Process Intlk F Name chars 7 and 8 | 32-127 | 1 | ASCII | F10 | "S " |
| | 44485 | 4484 | 1184 | Process Intlk F Name chars 9 and 10 | 32-127 | 1 | ASCII | F10 | "IN" |
| | 44486 | 4485 | 1185 | Process Intlk F Name chars 11 and 12 | 32-127 | 1 | ASCII | F10 | "TE" |
| | 44487 | 4486 | 1186 | Process Intlk F Name chars 13 and 14 | 32-127 | 1 | ASCII | F10 | "RL" |

Notes: * – Maximum setpoint value and 65535 represent OFF; ** – 1/Phase Current Scale Factor x A
*** – 101 represents unlimited; † – Minimum setpoint value represents OFF
†† – This register is only applicable to units with the VFD display
~* – 0.1 x A when Hi resolution mode is disabled; 0.01 x A when enabled

**TABLE 7–1: Modbus Memory Map (Sheet 10 of 11)**

| Group | Mod-icon | Address | | Description | Range | Step Value | Units / Scale | For-mat | Default Value |
|---|---|---|---|---|---|---|---|---|---|
| | | Dec | Hex | | | | | | |
| PROCESS INTERLOCK NAMES continued | 44488 | 4487 | 1187 | Process Intlk F Name chars 15 and 16 | 32-127 | 1 | ASCII | F10 | "OC" |
| | 44489 | 4488 | 1188 | Process Intlk F Name chars 17 and 18 | 32-127 | 1 | ASCII | F10 | "K " |
| | 44490 | 4489 | 1189 | Process Intlk F Name chars 19 and 20 | 32-127 | 1 | ASCII | F10 | "F " |
| | 44491 | 4490 | 118A | ...Reserved... | ... | ... | ... | ... | ... |
| | ↓ | ↓ | ↓ | ↓ | ↓ | ↓ | ↓ | ↓ | ↓ |
| | 44496 | 4495 | 118F | ...Reserved... | ... | ... | ... | ... | ... |
| | 44497 | 4496 | 1190 | Process Intlk G Name chars 1 and 2 | 32-127 | 1 | ASCII | F10 | "PR" |
| | 44498 | 4497 | 1191 | Process Intlk G Name chars 3 and 4 | 32-127 | 1 | ASCII | F10 | "OC" |
| | 44499 | 4498 | 1192 | Process Intlk G Name chars 5 and 6 | 32-127 | 1 | ASCII | F10 | "ES" |
| | 44500 | 4499 | 1193 | Process Intlk G Name chars 7 and 8 | 32-127 | 1 | ASCII | F10 | "S " |
| | 44501 | 4500 | 1194 | Process Intlk G Name chars 9 and 10 | 32-127 | 1 | ASCII | F10 | "IN" |
| | 44502 | 4501 | 1195 | Process Intlk G Name chars 11 and 12 | 32-127 | 1 | ASCII | F10 | "TE" |
| | 44503 | 4502 | 1196 | Process Intlk G Name chars 13 and 14 | 32-127 | 1 | ASCII | F10 | "RL" |
| | 44504 | 4503 | 1197 | Process Intlk G Name chars 15 and 16 | 32-127 | 1 | ASCII | F10 | "OC" |
| | 44505 | 4504 | 1198 | Process Intlk G Name chars 17 and 18 | 32-127 | 1 | ASCII | F10 | "K " |
| | 44506 | 4505 | 1199 | Process Intlk G Name chars 19 and 20 | 32-127 | 1 | ASCII | F10 | "G " |
| | 44507 | 4506 | 119A | ...Reserved... | ... | ... | ... | ... | ... |
| | ↓ | ↓ | ↓ | ↓ | ↓ | ↓ | ↓ | ↓ | ↓ |
| | 44512 | 4511 | 119F | ...Reserved... | ... | ... | ... | ... | ... |
| | 44513 | 4512 | 11A0 | Process Intlk H Name chars 1 and 2 | 32-127 | 1 | ASCII | F10 | "PR" |
| | 44514 | 4513 | 11A1 | Process Intlk H Name chars 3 and 4 | 32-127 | 1 | ASCII | F10 | "OC" |
| | 44515 | 4514 | 11A2 | Process Intlk H Name chars 5 and 6 | 32-127 | 1 | ASCII | F10 | "ES" |
| | 44516 | 4515 | 11A3 | Process Intlk H Name chars 7 and 8 | 32-127 | 1 | ASCII | F10 | "S " |
| | 44517 | 4516 | 11A4 | Process Intlk H Name chars 9 and 10 | 32-127 | 1 | ASCII | F10 | "IN" |
| | 44518 | 4517 | 11A5 | Process Intlk H Name chars 11 and 12 | 32-127 | 1 | ASCII | F10 | "TE" |
| | 44519 | 4518 | 11A6 | Process Intlk H Name chars 13 and 14 | 32-127 | 1 | ASCII | F10 | "RL" |
| | 44520 | 4519 | 11A7 | Process Intlk H Name chars 15 and 16 | 32-127 | 1 | ASCII | F10 | "OC" |
| | 44521 | 4520 | 11A8 | Process Intlk H Name chars 17 and 18 | 32-127 | 1 | ASCII | F10 | "K " |
| | 44522 | 4521 | 11A9 | Process Intlk H Name chars 19 and 20 | 32-127 | 1 | ASCII | F10 | "H " |
| | 44523 | 4522 | 11AA | ...Reserved... | ... | ... | ... | ... | ... |
| | ↓ | ↓ | ↓ | ↓ | ↓ | ↓ | ↓ | ↓ | ↓ |
| | 44528 | 4527 | 11AF | ...Reserved... | ... | ... | ... | ... | ... |
| | 44529 | 4528 | 11B0 | Process Intlk I Name chars 1 and 2 | 32-127 | 1 | ASCII | F10 | "PR" |
| | 44530 | 4529 | 11B1 | Process Intlk I Name chars 3 and 4 | 32-127 | 1 | ASCII | F10 | "OC" |
| | 44531 | 4530 | 11B2 | Process Intlk I Name chars 5 and 6 | 32-127 | 1 | ASCII | F10 | "ES" |
| | 44532 | 4531 | 11B3 | Process Intlk I Name chars 7 and 8 | 32-127 | 1 | ASCII | F10 | "S " |
| | 44533 | 4532 | 11B4 | Process Intlk I Name chars 9 and 10 | 32-127 | 1 | ASCII | F10 | "IN" |
| | 44534 | 4533 | 11B5 | Process Intlk I Name chars 11 and 12 | 32-127 | 1 | ASCII | F10 | "TE" |
| | 44535 | 4534 | 11B6 | Process Intlk I Name chars 13 and 14 | 32-127 | 1 | ASCII | F10 | "RL" |
| | 44536 | 4535 | 11B7 | Process Intlk I Name chars 15 and 16 | 32-127 | 1 | ASCII | F10 | "OC" |
| | 44537 | 4536 | 11B8 | Process Intlk I Name chars 17 and 18 | 32-127 | 1 | ASCII | F10 | "K " |
| | 44538 | 4537 | 11B9 | Process Intlk I Name chars 19 and 20 | 32-127 | 1 | ASCII | F10 | "I " |
| | 44538 | 4538 | 11BA | ...Reserved... | ... | ... | ... | ... | ... |
| | ↓ | ↓ | ↓ | ↓ | ↓ | ↓ | ↓ | ↓ | ↓ |
| | 44544 | 4543 | 11BF | ...Reserved... | ... | ... | ... | ... | ... |
| | 44545 | 4544 | 11C0 | Process Intlk J Name chars 1 and 2 | 32-127 | 1 | ASCII | F10 | "PR" |
| | 44546 | 4545 | 11C1 | Process Intlk J Name chars 3 and 4 | 32-127 | 1 | ASCII | F10 | "OC" |
| | 44547 | 4546 | 11C2 | Process Intlk J Name chars 5 and 6 | 32-127 | 1 | ASCII | F10 | "ES" |
| | 44548 | 4547 | 11C3 | Process Intlk J Name chars 7 and 8 | 32-127 | 1 | ASCII | F10 | "S " |
| | 44549 | 4548 | 11C4 | Process Intlk J Name chars 9 and 10 | 32-127 | 1 | ASCII | F10 | "IN" |

Notes: * – Maximum setpoint value and 65535 represent OFF; ** – 1/Phase Current Scale Factor x A
*** – 101 represents unlimited; † – Minimum setpoint value represents OFF
†† – This register is only applicable to units with the VFD display
~* – 0.1 x A when Hi resolution mode is disabled; 0.01 x A when enabled

**TABLE 7–1: Modbus Memory Map (Sheet 11 of 11)**

| Group | Mod-icon | Address | | Description | Range | Step Value | Units / Scale | For-mat | Default Value |
|---|---|---|---|---|---|---|---|---|---|
| | | Dec | Hex | | | | | | |
| PROCESS INTERLOCK NAMES continued | 44550 | 4549 | 11C5 | Process Intlk J Name chars 11 and 12 | 32-127 | 1 | ASCII | F10 | "TE" |
| | 44551 | 4550 | 11C6 | Process Intlk J Name chars 13 and 14 | 32-127 | 1 | ASCII | F10 | "RL" |
| | 44552 | 4551 | 11C7 | Process Intlk J Name chars 15 and 16 | 32-127 | 1 | ASCII | F10 | "OC" |
| | 44553 | 4552 | 11C8 | Process Intlk J Name chars 17 and 18 | 32-127 | 1 | ASCII | F10 | "K " |
| | 44554 | 4553 | 11C9 | Process Intlk J Name chars 19 and 20 | 32-127 | 1 | ASCII | F10 | "J " |
| | 44555 | 4554 | 11CA | ...Reserved... | ... | ... | ... | ... | ... |
| | ↓ | ↓ | ↓ | ↓ | ↓ | ↓ | ↓ | ↓ | ↓ |
| | 44736 | 4735 | 127F | ...Reserved... | ... | ... | ... | ... | ... |
| USER-DEFINED MEMORY | 44737 | 4736 | 1280 | Address - User Definable Data 0100 | 0-12FF | 1 | --- | F1 | 0 |
| | 44738 | 4737 | 1281 | Address - User Definable Data 0101 | 0-12FF | 1 | --- | F1 | 0 |
| | 44739 | 4738 | 1282 | Address - User Definable Data 0102 | 0-12FF | 1 | --- | F1 | 0 |
| | 44740 | 4739 | 1283 | Address - User Definable Data 0103 | 0-12FF | 1 | --- | F1 | 0 |
| | ↓ | ↓ | ↓ | ↓ | ↓ | ↓ | ↓ | ↓ | ↓ |
| | 44856 | 4855 | 12F7 | Address - User Definable Data 0177 | 0-12FF | 1 | --- | F1 | 0 |

Notes: * – Maximum setpoint value and 65535 represent OFF; ** – 1/Phase Current Scale Factor x A
*** – 101 represents unlimited; † – Minimum setpoint value represents OFF
†† – This register is only applicable to units with the VFD display
~* – 0.1 x A when Hi resolution mode is disabled; 0.01 x A when enabled

## Data Formats

**TABLE 7–2: Data Formats (Sheet 1 of 8)**

| Code | Description | Bitmask |
|---|---|---|
| **F1** | **Unsigned Integer: Numerical Data** | FFFF |
| **F2** | **Unsigned Long Integer: Numerical Data** | FFFFFFFF |
| **F3** | **Signed Long Integer: Numerical Data** | FFFFFFFF |
| **F4** | **Hardware Version Code** | --- |
| | 1 = A | --- |
| | ↓ | ↓ |
| | 26 = Z | --- |
| **F5** | **Unsigned Integer: Interlock Open** | FFFF |
| | 0 = No Interlock Open | --- |
| | 1 = Interlock A Open | --- |
| | 2 = Interlock B Open | --- |
| | 3 = Interlock C Open | --- |
| | 4 = Interlock D Open | --- |
| | 5 = External Open | --- |
| | 6 = ESD Open | --- |
| | 7 = Interlock E Open | --- |
| | 8 = Interlock F Open | --- |
| | 9 = Interlock G Open | --- |
| | 10 = Interlock H Open | --- |
| | 11 = Interlock I Open | --- |
| | 12 = Interlock J Open | --- |
| **F6** | **Unsigned Integer: Command Mode** | FFFF |
| | 0 = Manual | --- |
| | 1 = Auto | --- |
| | 2 = Manual Inhibit | --- |
| | 3 = Manual and Auto | --- |
| | 4 = Hard-Wire Auto | --- |

**TABLE 7–2: Data Formats (Sheet 2 of 8)**

| Code | Description | Bitmask |
|---|---|---|
| **F7** | **Unsigned Integer - Feeder Status** | FFFF |
| | 0 = Unavailable | --- |
| | 1 = Available - Auto | --- |
| | 2 = Available - Manual | --- |
| | 3 = Available (Manual and Auto) | --- |
| | 4 = Closed | --- |
| | 5 = ESD Trip/Open (Mod) | --- |
| | 6 = Test Mode | --- |
| **F9** | Unsigned Integer - Cause of Trip | FFFF |
| | 0 = No Trip | --- |
| | 1 = Process Interlock A | --- |
| | 2 = Process Interlock B | --- |
| | 3 = Process Interlock C | --- |
| | 4 = Process Interlock D | --- |
| | 5 = Faceplate Open | --- |
| | 6 = Process Open | --- |
| | 11 = Overload | --- |
| | 15 = Earth Fault | --- |
| | 17 = ESD Open | --- |
| | 18 = Local Isolator | --- |
| | 19 = Serial Comm Failure | --- |
| | 20 = Internal Fault | --- |
| | 22 = Emergency Open | --- |
| | 26 = Plant Interlock | --- |
| | 27 = Process Interlock E | --- |
| | 28 = Process Interlock F | --- |
| | 29 = Process Interlock G | --- |
| | 30 = Process Interlock H | --- |
| | 31 = Process Interlock I | --- |
| | 32 = Process Interlock J | --- |

**TABLE 7–2: Data Formats (Sheet 3 of 8)**

| Code | Description | Bitmask |
|---|---|---|
| **F10** | **Two ASCII Characters** | FFFF |
| | 32 to 127 = ASCII Character | 7F00 |
| | 32 to 127 = ASCII Character | 007F |
| **F11** | **Unsigned Integer: Feeder Type** | FFFF |
| | 2 = Contactor Feeder | --- |
| | 8 = Circuit Breaker | --- |
| **F12** | **Unsigned Integer: Phase CT Connection** | FFFF |
| | 0 = 3 CTs (R-Y-B) | |
| | 1 = 2 CTs (R-B) | |
| **F13** | **Unsigned Integer - Earth Fault CT Type** | FFFF |
| | 0 = 2000:1 CBCT | --- |
| | 1 = 5 A Secondary | --- |
| **F14** | **Unsigned Integer: Enable/Disable** | FFFF |
| | 0 = Disable | --- |
| | 1 = Enable | --- |
| **F15** | **Unsigned Integer: VT Connection Type** | FFFF |
| | 0 = Line (R-N) | --- |
| | 1 = Phase (R-Y) | --- |
| **F16** | **Unsigned Integer: Manual/Auto** | FFFF |
| | 0 = Manual | --- |
| | 1 = Auto | --- |
| **F17** | **Interlock Input Function** | FFFF |
| | 0 = Not Used | --- |
| | 1 = Process Interlock A | --- |
| | 2 = Process Interlock B | --- |
| | 3 = Process Interlock C | --- |
| | 4 = Process Interlock D | --- |
| | 5 = Plant Interlock | --- |
| | 6 = Lockout Reset | --- |
| | 7 = Setpoint Access | --- |
| | 8 = Auto Permissive | --- |
| | 9 = Auto Close A | --- |
| | 10 = Auto Close B | --- |
| | 11 = Reset Emergency Open Trip | --- |
| | 12 = Reserved | --- |
| | 13 = Two Wire Control | --- |
| | 14 = Test Switch | --- |
| | 15 = Remote Permissive | --- |
| | 16 = Serial Permissive | --- |
| | 17 = Non-Lockout Reset | --- |
| | 18 = Process Interlock E | --- |
| | 19 = Process Interlock F | --- |
| | 20 = Process Interlock G | --- |
| | 21 = Process Interlock H | --- |
| | 22 = Process Interlock I | --- |
| | 23 = Process Interlock J | --- |
| | 24 = Open A | --- |

**TABLE 7–2: Data Formats (Sheet 4 of 8)**

| Code | Description | Bitmask |
|---|---|---|
| **F17 ctd.** | 25 = Open B | --- |
| | 26 = Local Isolator | --- |
| | 27 = Switch Input Monitor | --- |
| **F18** | **Unsigned Integer: Interlock Stop / Latched Trip** | FFFF |
| | 0 = Interlock Stop | --- |
| | 1 = Latched Trip | --- |
| **F19** | **Unsigned Integer: Unlatched / Latched** | FFFF |
| | 0 = Unlatched | --- |
| | 1 = Latched | --- |
| **F20** | **Unsigned Integer: Programmable Relay** | FFFF |
| | 0 = Serial Control | --- |
| | 1 = Trips | --- |
| | 2 = Alarms | --- |
| | 3 = Pre Contactor A | --- |
| | 4 = Post Contactor A | --- |
| | 5 = Post Contactor B | --- |
| | 6 = Feeder Available Manual | --- |
| | 7 = Reserved | --- |
| | 8 = Reserved | --- |
| | 9 = Reserved | --- |
| | 10 = Keypad Reset | --- |
| | 11 = Interlock 1 | --- |
| | 12 = Interlock 2 | --- |
| | 13 = Interlock 3 | --- |
| | 14 = Interlock 4 | --- |
| | 15 = Interlock 5 | --- |
| | 16 = Interlock 6 | --- |
| | 17 = Interlock 7 | --- |
| | 18 = Interlock 8 | --- |
| | 19 = Interlock 9 | --- |
| | 20 = Interlock 10 | --- |
| | 21 = Auto Mode | --- |
| | 22 = Feeder Closed | --- |
| | 23 = Feeder Available | --- |
| | 24 = Feeder Unavailable Auto | --- |
| | 25 = Feeder Unavailable Manual | --- |
| | 26 = Feeder Available Auto | --- |
| | 27 = Load Sense | --- |
| | 28 = Comms Healthy | --- |
| | 29 = Pre-Cont. A/B Manual | --- |
| **F21** | **Signed Integer** | FFFF |
| **F22** | **Command** | FFFF |
| | 1 = Reset | --- |
| | 2 = Lockout Reset | --- |
| | 3 = Open | --- |
| | 4 = Close A | --- |
| | 5 = Close B | --- |
| | 6 = Prog. Relay 1 = On | --- |

**TABLE 7–2: Data Formats (Sheet 5 of 8)**

| Code | Description | Bitmask |
|---|---|---|
| **F22 ctd.** | 7 = Prog. Relay 1 = Off | --- |
| | 8 = Clear Maintenance Timers | --- |
| | 9 = Clear Maintenance Counters | --- |
| | 10 = Clear Energy Data | --- |
| | 11 = Display Message | --- |
| | 12 = Simulate Keypress | --- |
| | 13 = Manual Inhibit | --- |
| | 14 = Manual Restore | --- |
| | 15 = Not used | --- |
| | 16 = Store New Address | --- |
| | 17 = Upload Mode Entry 2 | --- |
| | 18 = Upload Mode Entry 1 | --- |
| | 19 = Reload Factory Setpoints 2 | --- |
| | 20 = Reload Factory Setpoints 1 | --- |
| | 21 = Test Relays & LEDs | --- |
| **F23** | **Unsigned Integer: Keypress Simulation** | FFFF |
| | 0x3100 = SETPOINT | --- |
| | 0x3200 = ACTUAL | --- |
| | 0x3300 = RESET | --- |
| | 0x3400 = STORE | --- |
| | 0x3500 = MESSAGE UP | --- |
| | 0x3600 = MESSAGE DN | --- |
| | 0x3700 = MESSAGE LEFT | --- |
| | 0x3800 = MESSAGE RT | --- |
| | 0x3900 = VALUE UP | --- |
| | 0x6100 = VALUE DOWN | --- |
| **F24** | **Unsigned Integer: Current key press** | FFFF |
| | 0000 = no key | --- |
| | FE01 = AUTO | --- |
| | FE02 = MANUAL | --- |
| | FE04 = CLOSE A | --- |
| | FE08 = CLOSE B | --- |
| | FD01 = OPEN 1 | --- |
| | FD02 = OPEN 2 | --- |
| | FD04 = RESET | --- |
| | FD08 = STORE | --- |
| | FB01 = SETPOINT | --- |
| | FB02 = ACTUAL | --- |
| | FB04 = MESSAGE UP | --- |
| | FB08 = MESSAGE DOWN | --- |
| | F701 = MESSAGE LEFT | --- |
| | F702 = MESSAGE RIGHT | --- |
| | F704 = VALUE UP | --- |
| | F708 = VALUE DOWN | --- |
| **F25** | Unsigned Integer: Modbus Baud Rate | FFFF |
| | 0 = 1200 | --- |
| | 1 = 2400 | --- |
| | 2 = 4800 | --- |
| | 3 = 9600 | --- |
| | 4 = 19200 | --- |

**TABLE 7–2: Data Formats (Sheet 6 of 8)**

| Code | Description | Bitmask |
|---|---|---|
| **F26** | **Unsigned Integer: Relay / LED Test Data** | FFFF |
| | 0 = Normal operation | --- |
| | 1 = Relay A On | --- |
| | 2 = Relay B On | --- |
| | 3 = Prog. Relay On | --- |
| | 4 = ESD Relay On | --- |
| | 5 = All Relays On | --- |
| | 6 = Closed LED On | --- |
| | 7 = Open LED On | --- |
| | 8 = Tripped LED On | --- |
| | 9 = Alarm LED On | --- |
| | 10 = Fault LED On | --- |
| | 11 = Auto LED On | --- |
| | 12 = Manual LED On | --- |
| | 13 = All LEDs On | --- |
| | 14 = Flash Voltage On | --- |
| **F28** | **Unsigned Integer: Overload Curve** | FFFF |
| | 0 = OFF | --- |
| | 1 = IEC A | --- |
| | 2 = IEC B | --- |
| | 3 = IEC C | --- |
| **F33** | **Manufacture Month/ Day** | FFFF |
| | Month: 1 = January, 2 = February...12 = December | --- |
| | Day: 1 to 31 in steps of 1 | --- |
| **F34** | **Manufacture Year: Unsigned Integer** | FFFF |
| | Year: 1995, 1996 | --- |
| **F35** | **Unsigned Integer: CT Connection Type** | FFFF |
| | 0 = 3 CTs (R-Y-B) | --- |
| | 1 = 2 CTs (R and B) | --- |
| **F36** | **Simulated Switch State** | FFFF |
| | 0 = OPEN | --- |
| | 1 = CLOSED | --- |
| **F100** | **Switch Input Status:** | FFFF |
| | Interlock Input 1 | 0001 |
| | Interlock Input 2 | 0002 |
| | Interlock Input 3 | 0004 |
| | Interlock Input 4 | 0008 |
| | Interlock Input 5 | 0010 |
| | Interlock Input 6 | 0020 |
| | Interlock Input 7 | 0040 |
| | Interlock Input 8 | 0080 |
| | Interlock Input 9 | 0100 |
| | Interlock Input 10 | 0200 |
| | Open | 0400 |
| | Close A | 0800 |
| | Close B | 1000 |
| | Test Mode | 2000 |
| | Contactor A N/O | 4000 |
| | Contactor B N/O | 8000 |

**TABLE 7–2: Data Formats (Sheet 7 of 8)**

| Code | Description | Bitmask |
|---|---|---|
| **F101** | **LED Status Flags 1** | FFFF |
| | Closed | 0001 |
| | Open | 0002 |
| | Tripped | 0004 |
| | Alarm | 0008 |
| | Fault | 0010 |
| | Test 1 | 0020 |
| | Test 2 | 0040 |
| **F102** | **LED Status Flags 2** | FFFF |
| | Relay A | 0001 |
| | Relay B | 0002 |
| | Programmable Relay | 0004 |
| | ESD Relay | 0008 |
| | Auto | 0010 |
| | Manual | 0020 |
| | Beeper | 0040 |
| | VFD/LCD test mode | 0080 |
| **F103** | **Operation Status** | FFFF |
| | External Close | 0001 |
| | External Open | 0002 |
| | ESD Open | 0004 |
| **F104** | **Alarm Status Flags 1** | FFFF |
| | Earth Fault Alarm | 0040 |
| | Contactor Inspection Interval Exceeded Alarm | 0400 |
| | Internal Fault Alarm | 1000 |
| **F105** | **Alarm Status Flags 2** | FFFF |
| | Open Control Circuit / Breaker Failed to Close | 0001 |
| | Welded Contactor / Breaker Failed to Open | 0002 |
| **F106** | **Interlock Flags** | FFFF |
| | Not Used | 0001 |
| | Process Interlock A | 0002 |
| | Process Interlock B | 0004 |
| | Process Interlock C | 0008 |
| | Process Interlock D | 0010 |
| | Process Interlock E | 0020 |
| | Process Interlock F | 0040 |
| | Process Interlock G | 0080 |
| | Process Interlock H | 0100 |
| | Process Interlock I | 0200 |
| | Process Interlock J | 0400 |
| **F107** | **Trip Flags 1** | FFFF |
| | Earth Fault | 0001 |
| | Overload | 0002 |
| | Local Isolator | 0400 |
| | Plant Interlock | 0800 |
| | Serial Communication Failure | 1000 |
| | Internal Fault | 2000 |
| | Emergency Open | 4000 |
| | ESD Open (Mod) | 8000 |

**TABLE 7–2: Data Formats (Sheet 8 of 8)**

| Code | Description | Bitmask |
|---|---|---|
| **F108** | **Trip Flags 2** | FFFF |
| | Process Interlock A | 0001 |
| | Process Interlock B | 0002 |
| | Process Interlock C | 0004 |
| | Process Interlock D | 0008 |
| | Process Interlock E | 0080 |
| | Process Interlock F | 0100 |
| | Process Interlock G | 0200 |
| | Process Interlock H | 0400 |
| | Process Interlock I | 0800 |
| | Process Interlock J | 1000 |
| **F109** | **Open/Close Flags** | FFFF |
| | Two Wire Open requested | 0002 |
| | Undervoltage Reclose in Progress | 0004 |
| **F112** | **Internal Fault Error Code** | FFFF |
| | ADC Reference out of Range | 0001 |
| | HC705 Processor not Responding | 0002 |
| | Switch Input Circuit Fault | 0004 |
| | HC705 processor MOR byte not programmed | 0008 |
| **F113** | Unsigned Integer: Auto Mode Definition | FFFF |
| | 0 = Serial | --- |
| | 1 = Hard-Wire | --- |




# 8 Testing

## Injection Testing

### Primary Injection Testing

Prior to FM2 commissioning, complete system operation can be verified by injecting current through the phase and earth fault CTs. To accomplish this, a current injection test set is required.

Operation of the entire FM2 control/protection system, except the phase and earth fault CTs, can be checked by applying input signals to the FM2 from a secondary injection test set as described in this chapter.

### Secondary Injection Testing

A simple, three-phase secondary injection test circuit is shown below. Tests should be performed to verify correct operation and wiring. All functions are firmware driven and this testing is required only to verify correct firmware/hardware interaction.

The tests described in this chapter can be repeated and modified using setpoints and current levels more closely suited to the actual installation.

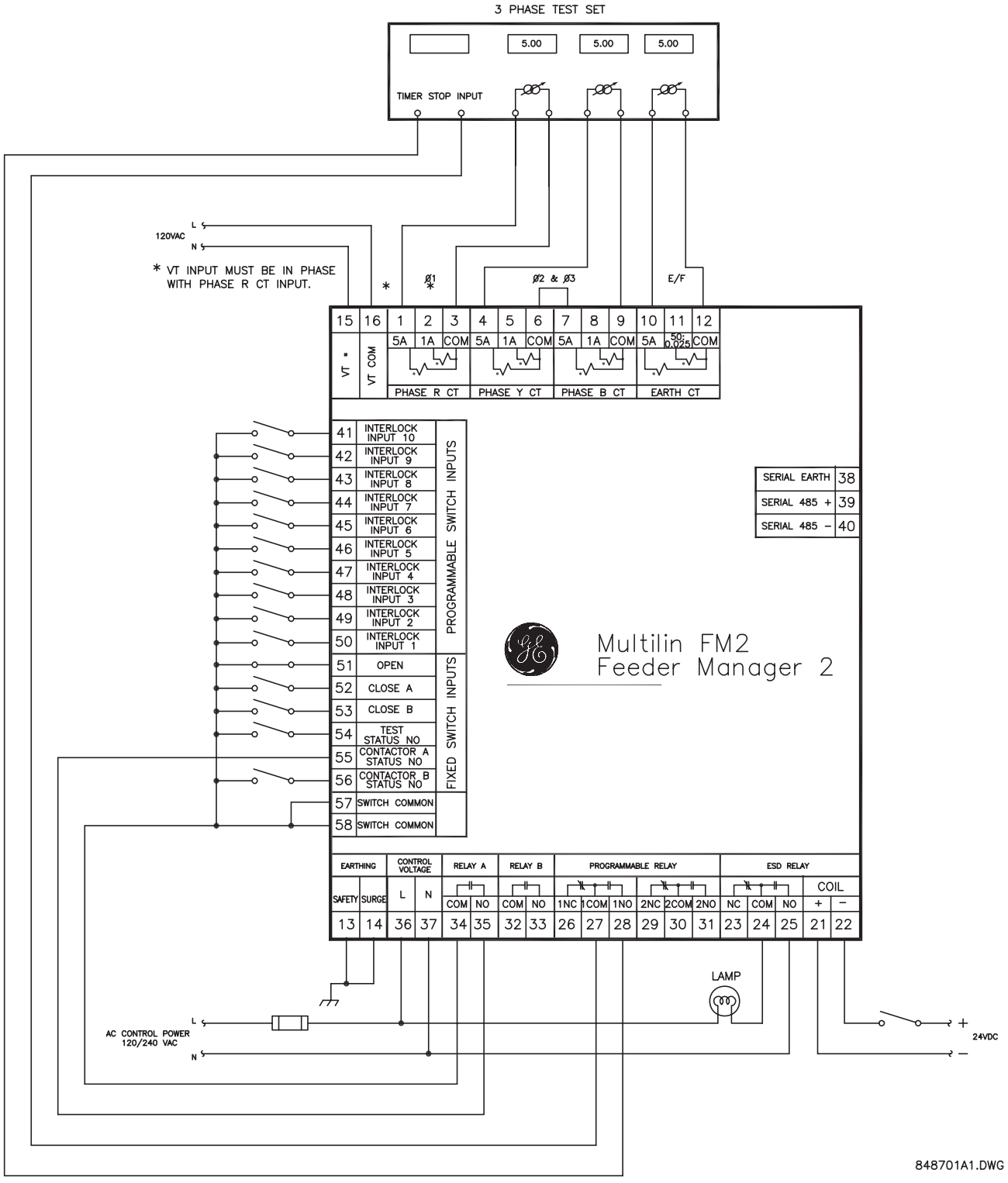


**FIGURE 8–1: Secondary Injection Test Setup**

# Functional Tests

## Phase Current Functions

Any phase current protection is based on the ability of the FM2 to read phase input currents accurately.

Make the following settings changes:

**S1 CONFIGURATION** ⇩⇩ **FEEDER IDENTIFICATION** ⇨⇨ **FEEDER RATING** = "100 A"
**S1 CONFIGURATION** ⇩⇩⇩ **FEEDER** ⇨ **FEEDER TYPE** = "CONTACTOR FEEDER"
**S1 CONFIGURATION** ⇩⇩⇩⇩ **CT/VT INPUTS** ⇨ **PHASE CT PRIMARY AMPS** = "100"

To determine if the relay is reading the proper input current values, inject different phase currents into the CT inputs and view the current readings in **A1 DATA** ⇩ **FEEDER DATA**. The displayed current should be equal to the actual injected current multiplied by the CT ratio.

Phase current values will be displayed even if the feeder status is open; that is, Relay A has not been activated by a close command. Very low currents are displayed as "0 A".

Once the accuracy of the phase CT inputs has been established, various phase alarm and trip condition tests can be performed by altering setpoints and injected phase currents.

To simulate an overload condition, make the following changes in the **S2 PROTECTION** ⇩ **FEEDER PROTECTION THERMAL** menu:

**OVERLOAD CURVE NUMBER** = "IEC A"
**CURVE MULTIPLIER** = "1.0"

Set the **FEEDER RATING** to "50 A". Close the Close A input and note that the CLOSED LED goes on. Inject a current of 10 A into all three phases. The relay will display a current value of:

$$\text{displayed current} = \text{injected current} \times \frac{100}{5} = 10\text{ A} \times \frac{100}{5} = 200\text{ A} \qquad \textbf{(EQ 8.1)}$$

This represents four times the phase **FEEDER RATING** setpoint. Therefore, based on a 400% overload and an IEC A curve, Relay A will change state 4.980 seconds after the overload is first applied. When this occurs, the Closed LED turns off and the Tripped and Open LEDs are lit.

Make the following setting change to operate the Programmable Relay on any trip

**S4 CONTROL** ⇩⇩ **PROG RELAY 1 CONFIG** ⇨ **PROG RELAY 1 FUNCTION** = "TRIPS"

To reset the thermal overload and earth fault trips, make the following setting change:

**S3 PROCESS** ⇩ **CONFIGURABLE INPUTS** ⇨ **INTERLOCK INPUT 1** = "LOCKOUT RESET"

Close the interlock 1 switch to reset the trip.

## Earth Fault Current Functions

Test the Earth Fault CT (Secondary / 2000:1) in a similar manner to phase currents for accuracy at various injected current levels. To check alarm and trip levels, make the following settings changes.

In the **S1 CONFIGURATION** ⇩⇩⇩⇩ **CT/VT INPUTS** setpoints page, change:

**EARTH FAULT CT INPUT** = "5 A Secondary"

In the **S1 CONFIGURATION** ⇩⇩ **FEEDER IDENTIFICATION** setpoints page, change:

**FEEDER RATING** = "100 A"

In the **S2 PROTECTION** ⇩⇩ **FEEDER PROTECTION EARTH FAULT** setpoints page, change:

**EARTH FAULT ALARM LEVEL** = "40 %FLC"
**EARTH FAULT TRIP LEVEL** = "80 %FLC"

While displaying the **A1 DATA** ⇩ **FEEDER DATA** ⇨⇨⇨ **EARTH CURRENT** actual value, begin injecting current into the 5 A Earth Fault CT input. The Alarm LED lights at 40 A corresponding to the 40% FLC alarm setting. Change the display back to **EARTH CUR-**

**RENT** and continue increasing injected secondary current. When the measured Earth Current reaches 80 A, a Earth Fault Trip occurs. This trip causes the FM2 to change its indicators and output relay status. The Closed LED turns off, the Tripped and Open LEDs turn on, and Relay A de-energises. The FM2 displays a Earth Fault Trip message. Turn the Earth Fault current off and close the Interlock 1 switch to reset the trip.

## Input Functions

Operation of each FM2 switch input can be verified on the display. Go to **A3 INPUTS** ⇩ **INPUT CONTACT STATUS** and using the MESSAGE LEFT/RIGHT keys, view the status of each input one at a time. Open and close each switch input and note that the display reflects the present status of the input terminals. The status is shown as either OPEN or CLOSED.

## Power Fail Test

To test the Power Fail circuit, connect the supply voltage to the FM2 through a variac and begin decreasing control voltage. When the control voltage drops below 80 V for 120 V AC input or 150 V for 240 V AC input, the fault light comes on and the FM2 ceases to operate. The FM2 has insufficient voltage to continue accurately monitoring the feeder. All output relays will change to their power off state. Decrease control voltage to zero and then return voltage to its normal operating level. Verify that the FM2 resumes its normal operation. Check the power fail memory circuit by verifying that setpoints and statistical data have not been altered.




# 9 Feeder Types

## Contactor Type

**Description**

This PCC circuit uses contactors as a power-switching device in the feeder. When the close button is pressed the 1M coil is picked up, closing the contactor and is sealed in by 1M contact. When the open button is pressed the 1M coil is dropped out and feeder opens.

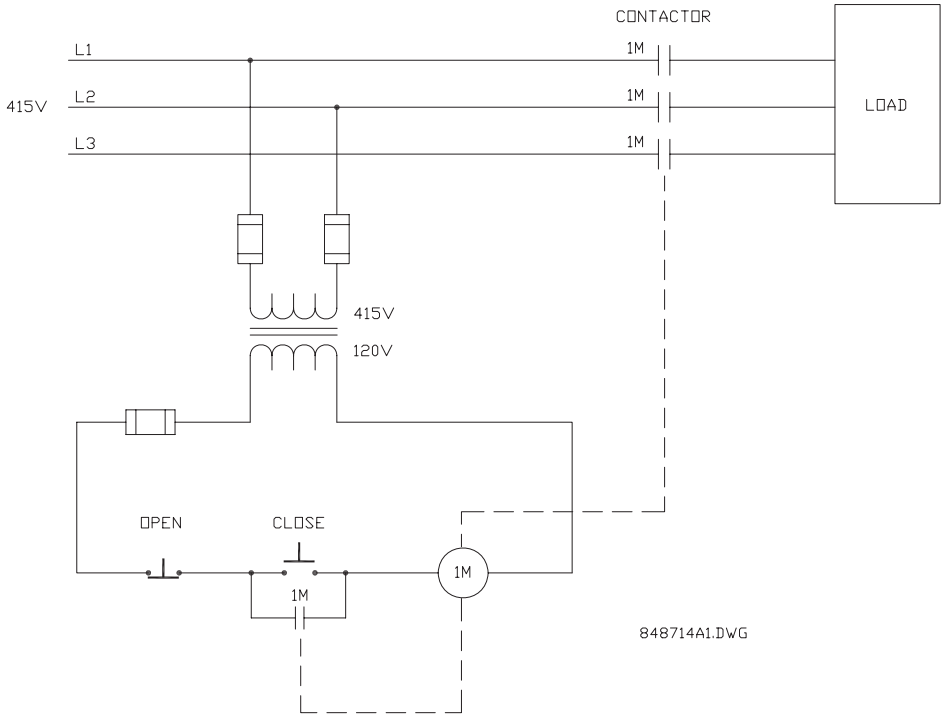


**FIGURE 9–1: Feeder with Contactor**

To program the FM2 for contactor feeder, set **S1 CONFIGURATION** ⇩⇩⇩ **FEEDER** ⇨ **FEEDER TYPE** to "CONTACTOR FEEDER".

### FM2 Sequences for Contactor A

Either of the output relays can be used for contactor switching. The sequences for contactor A are shown below.

To CLOSE:

1. Close A signal received by the FM2 (serial, switch input or faceplate).
2. Close and maintain Relay A. The feeder is now closed.

To OPEN/TRIP:

1. Open signal received or trip occurs.
2. Open output Relay A. The feeder is now open

When the power to the FM2 is interrupted, Relay A de-energises, causing it to open and open the feeder. The FM2 can only be wired for fail-safe operation. If feedback is not received from the 1M contact to the Contactor A Status N.O. input on the FM2 within 0.25 second of closing Relay A, an Open Control Circuit alarm occurs. This causes Relay A to open. If feedback remains at the Contactor A Status N.O. input for more than 0.25 second after opening Relay A, a Welded Contactor alarm occurs. The Close B signal opens Relay A and closes Relay B.

### FM2 Sequences for Contactor B

The sequences for contactor B are shown below.

To CLOSE:

1. Close B signal received by the FM2 (serial, switch input or faceplate).
2. Close and maintain Relay B. The feeder is now closed.

To OPEN/TRIP:

1. Open signal received or trip occurs.
2. Open Relay B. The feeder is now open

When the power to the FM2 is interrupted, Relay B de-energises, causing it to open and open the feeder. The FM2 can only be wired for fail-safe operation. If feedback is not received from the 1M contact to the Contactor B Status N.O. input on the FM2 within 0.25 second of closing Relay B, an Open Control Circuit alarm occurs. This causes the Relay B to open. If feedback remains at the Contactor B Status N.O. input for more than 0.25 second after opening Relay By, a Welded Contactor alarm occurs. The Close A signal opens Relay B and closes Relay A.

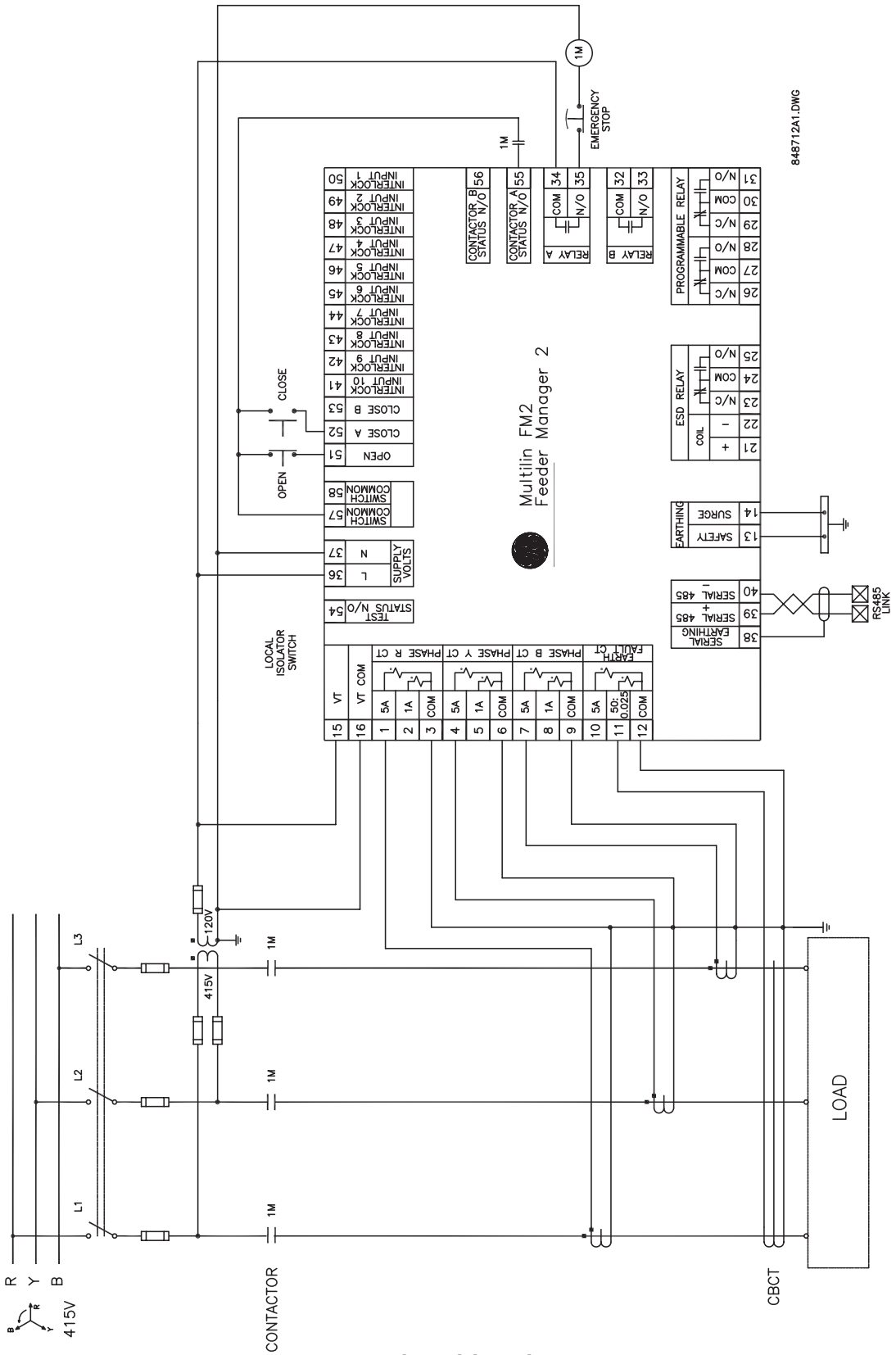


**FIGURE 9–2: Contactor Feeder Wiring Diagram**

# Circuit Breaker Feeder

## Description

This PCC circuit uses circuit breaker as a power-switching device in the feeder. When the close button is pressed the closing coil is picked up, closes the circuit breaker. Once the breaker is closed, the 52b breaker N/C contact opens and stops the current flowing into the closing coil circuit. When the open button is pressed the breaker trip coil energises & opens the circuit breaker. Once the breaker is opened, the breaker N/O contact (52a) opens and stops the current flowing into the trip coil circuit.

WARNING

**The FM2 can be used for breaker feeders only if the breaker has built-in trip units.**

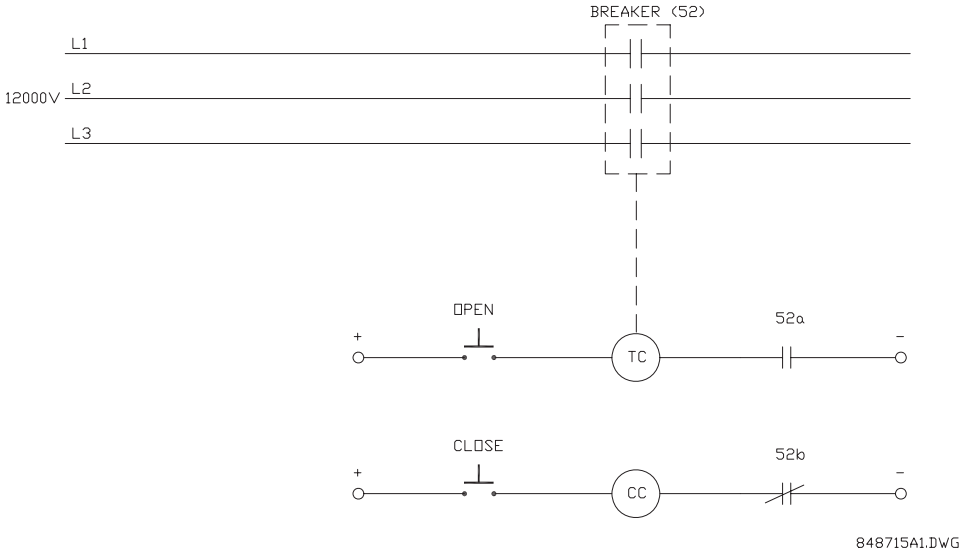


**FIGURE 9–3: Feeder with Circuit Breaker**

To program the FM2 for circuit breaker feeder, make the following changes in the **S1 CONFIGURATION** ⇨⇩ **FEEDER** menu:

**FEEDER TYPE** = "CIRCUIT BREAKER"
**ACB PULSE TIME** = "0.5 s"

## FM2 Sequences

To CLOSE:

1. Close A signal received by the FM2 (serial, switch input or faceplate).
2. Closes and maintains Relay A for the set duration of circuit breaker pulse time.
3. The Circuit breaker is now closed

To OPEN/TRIP:

1. Open signal received or trip occurs.
2. Closes and maintains Relay B for the set CB pulse time and energises trip coil
3. The Feeder is now open.
4. If FM2 receives Open signal within CB pulse time after Close signal, Relay A is opened and Relay B is closed for the set CB pulse time.

If feedback is not received from the breaker contact to the Contactor A Status N.O. input on the FM2 within 0.25 second of closing Relay A, a Breaker Failed To Close alarm occurs. This causes Relay A to open. If feedback remains at the Contactor A Status N.O. input for more than 0.25 second after closing Relay B, a Breaker Failed To Open alarm occurs. The Close B signal is non-operative in a breaker type feeder.

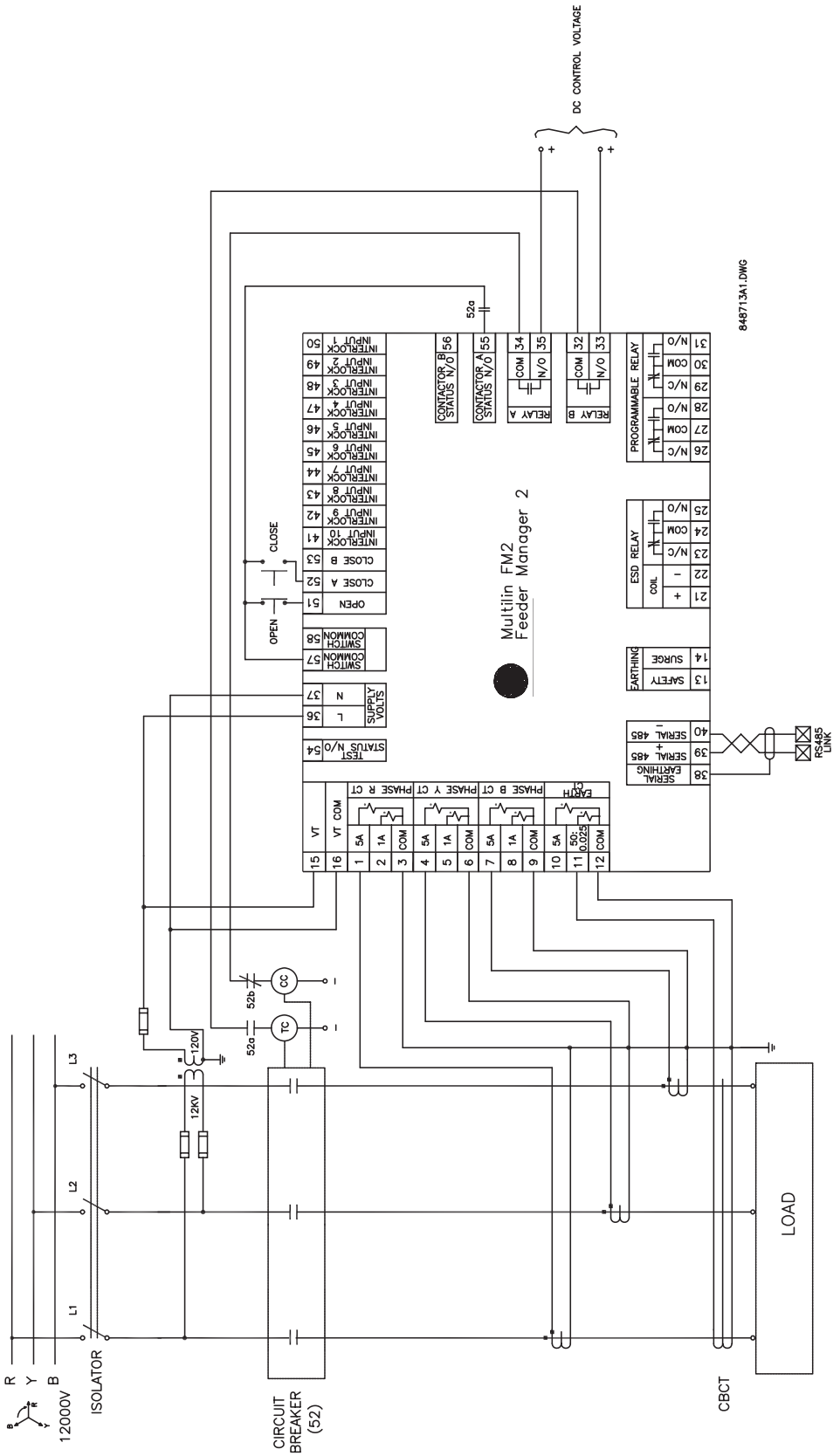


**FIGURE 9–4: Circuit Breaker Feeder Wiring Diagram**




# 10 Control Wire

## Two Wire Control

### Description

This control scheme is used when a feeder is directly controlled by a PLC contact. When the PLC contact is closed the feeder is closed. When the PLC contact opens the feeder opens.

To program the FM2 for two-wire control, make the following setpoint changes in the menu:

**S3 PROCESS** ⇩ **CONFIGURABLE INPUTS** ⇨ **INTERLOCK INPUT 1**: "TWO WIRE CONTROL"
**S3 PROCESS** ⇩⇩⇩ **OPEN CONFIGURATION** ⇨⇨ **FACEPLATE OPEN**: "LATCHED"

NOTE

The **INTERLOCK INPUT 1** setpoint was chosen to match the wiring diagram provided. Any of the available Interlocks 1 through 10 could be programmed for "TWO WIRE CONTROL".

### Control Operation

CLOSE:

- Close command received (switch input) and maintained.

OPEN:

- Close command removed.
- Pressing the OPEN key causes a latched trip. The feeder cannot be reclosed until the RESET key is pressed.

Terminal 51 (Open input) must be closed to allow a close. The FM2 display will read "Feeder Status Unavailable" when the open input is open.

If feedback is not received by the Contactor A relay Status N.O. inputs within 0.25 second of closing Relay A, an Open Control Circuit alarm will occur. This will cause Relay A to open.

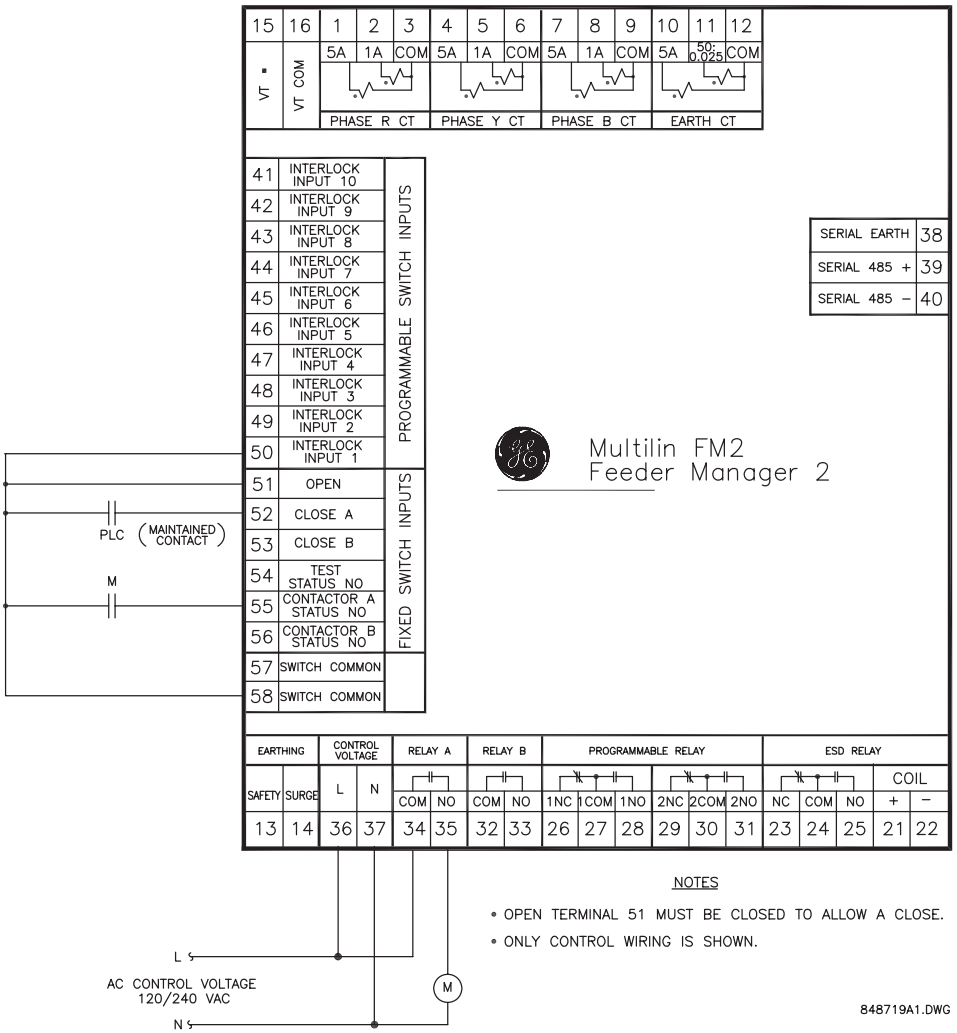


**FIGURE 10–1: Two Wire Control**

# Hand/Off/Auto Configuration

### 2-Wire Hand / 2-Wire Auto Description

This control scheme is used when it is desirable to control the feeder manually and automatically. In the Hand position, the feeder is energised immediately. In the auto position, the feeder is energised by the maintained PLC contact. When the PLC contact opens, the feeder opens.

To program the FM2 for two-wire hand / two-wire auto control, set:

**S3 PROCESS** ⇩ **CONFIGURABLE INPUTS** ⇨ **INTERLOCK INPUT 1**: "TWO WIRE CONTROL"
**S3 PROCESS** ⇩⇩⇩ **OPEN CONFIGURATION** ⇨⇨ **FACEPLATE OPEN**: "LATCHED"

NOTE

The **INTERLOCK INPUT 1** setpoint was chosen to match the wiring diagram provided. Any of the available Interlocks 1 through 10 could be programmed for "TWO WIRE CONTROL".

### 2-Wire Hand / 2-Wire Auto Control Operation

HAND:

- In the hand position, the feeder will close.

- Pressing the OPEN key causes a latched trip. The feeder cannot be reclosed until the RESET key is pressed.

OFF:

- In the off position, the feeder will open.

AUTO:

- In the auto position, the feeder is available to close.
- When the PLC contact closes, the feeder closes.
- When the PLC contact opens, the feeder opens.
- Pressing the OPEN key causes a latched trip. The feeder cannot be reclosed until the RESET key is pressed.

Terminal 51 (Open input) must be closed to allow a close. The FM2 display will read "Feeder Status Unavailable" when the open input is open.

If feedback is not received by the Contactor A Status N.O. input within 0.25 second of closing Relay A, an Open Control Circuit alarm will occur. This causes Relay A to open.

In the case of a Faceplate Open trip, the close signal to Terminal 52 should be removed if reclosing is not desired. When the RESET key is pressed on the FM2, the feeder will be reclosed based on Terminal 52.

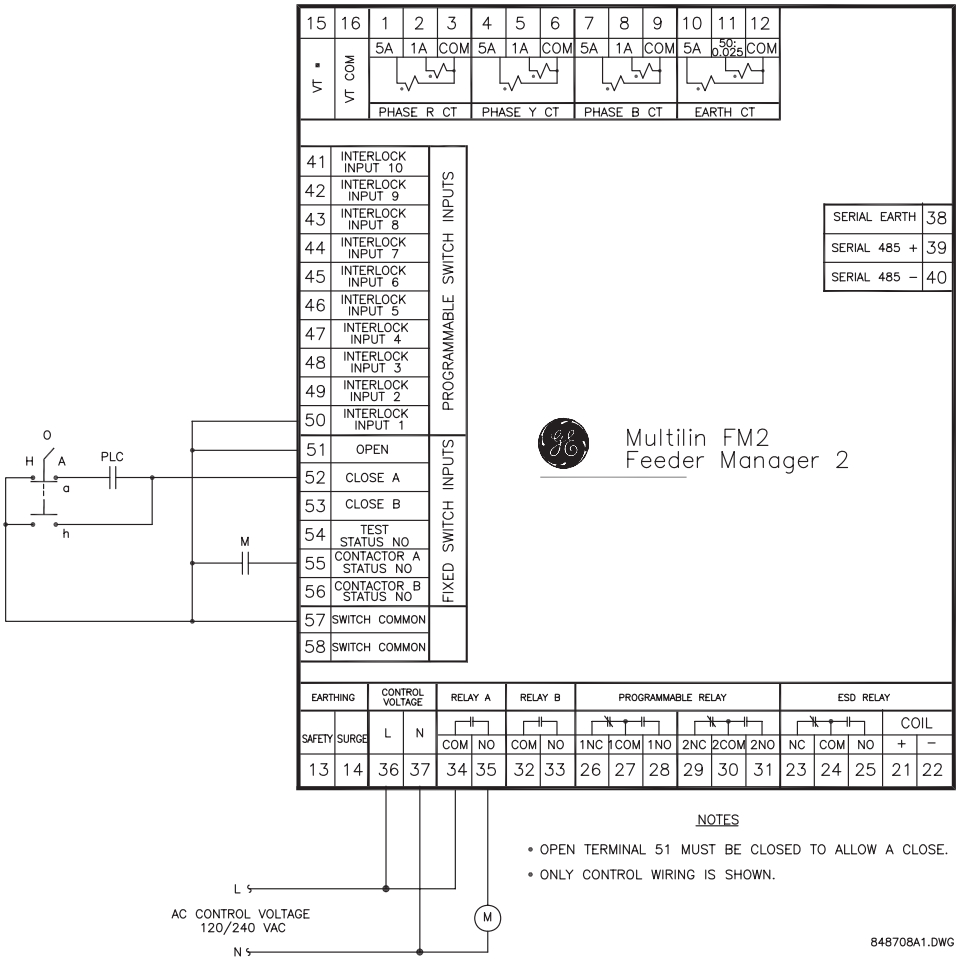


**FIGURE 10–2: HOA Two-Wire Hand / Two-Wire Auto**

### 3-Wire Hand / 2-Wire Auto Description

This control scheme is used when it is desirable to control the feeder manually and automatically. In the Hand position, the feeder is energised via the CLOSE button and de-energised via the OPEN button. In the auto position, the feeder is energised by the maintained PLC contact. When the PLC contact opens, the feeder opens.

To program the FM2 for three-wire hand / two-wire auto control, set:

**S3 PROCESS ⇩ CONFIGURABLE INPUTS ⇨ INTERLOCK INPUT 1**: "TWO WIRE CONTROL"
**S3 PROCESS ⇩⇩⇩ OPEN CONFIGURATION ⇨⇨ FACEPLATE OPEN**: "LATCHED"




The **INTERLOCK INPUT 1** setpoint was chosen to match the wiring diagram provided. Any of the available Interlocks 1 through 10 could be programmed for "TWO WIRE CONTROL".

### 3-Wire Hand / 2-Wire Auto Control Operation

HAND:

- In the hand position, the feeder is available to close.
- When the CLOSE button is pressed, the feeder will close.
- When the OPEN button is pressed, the feeder will open.
- Pressing the OPEN key causes a latched trip. The feeder cannot be reclosed until the RESET key is pressed.

OFF:

In the off position, the feeder will open.

AUTO:

- In the auto position, the feeder is available to close.
- When the PLC contact closes the feeder closes.
- When the PLC contact opens the feeder opens.
- When the faceplate OPEN key is pressed, it causes a latched trip. The feeder cannot be reclosed until reset is pressed.

Terminal 51 (Open input) must be closed to allow a close. The FM2 display will read "Feeder Unavailable" when the open input is open.

If feedback is not received by the Contactor A Status N.O. input within 0.25 second of closing Relay A, an Open Control Circuit alarm will occur. This will cause Relay A to open.

In the auto position the OPEN pushbutton at the feeder control **will not OPEN** the feeder.

In the case of a faceplate open trip, the close signal to Terminal 52 should be removed if reclosing is not desired. When the RESET key is pressed on the FM2, the feeder will be reclosed based on Terminal 52.

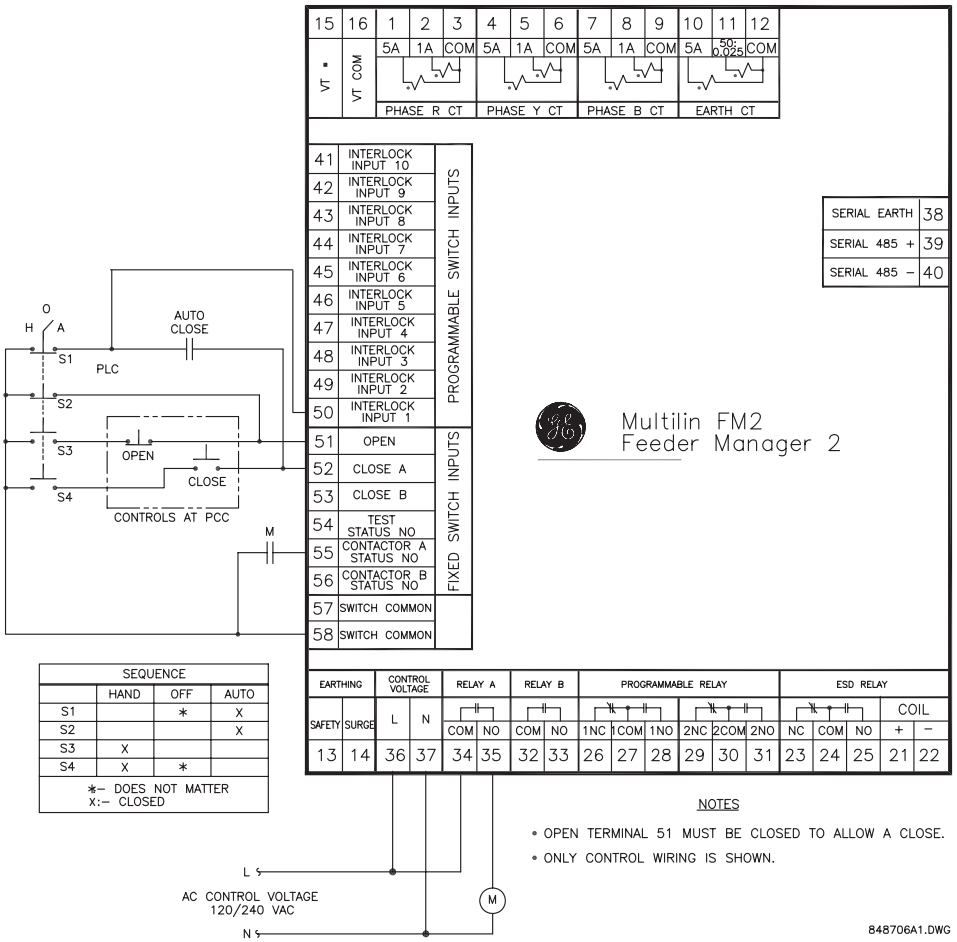


**FIGURE 10–3: HOA Three Wire Hand / Two Wire Auto**

### 3 Wire Hand / 3 Wire Auto Description

This control scheme is used when it is desirable to control the feeder manually and automatically. In the Hand position, the feeder is energised via the CLOSE button and de-energised via the OPEN button. In the auto position, the feeder is energised automatically when the PLC1 contact is pulsed closed. When the PLC2 contact is pulsed open, the feeder opens.

To program the FM2 for three-wire hand / two-wire auto control, set the FM2 to the default settings.

### 3 Wire Hand / 3 Wire Auto Control Operation

HAND:

- In the hand position, the feeder is available to close.
- When the CLOSE button is pressed, the feeder closes.
- When the OPEN button is pressed, the feeder opens.

OFF:

- In the off position, the feeder will open.

AUTO:

- In the auto position, the feeder is available to close.
- When the PLC contact is pulsed closed, the feeder closes.
- When the PLC contact is pulsed open, the feeder opens.
- When the OPEN button is pressed, the feeder opens.

Terminal 51 (Open input) must be closed to allow a close. The FM2 display will read "Feeder Status Unavailable" when the open input is open.

If feedback is not received by the Contactor A Status N.O. input within 0.25 second of closing Relay A, an Open Control Circuit alarm will occur. This will cause Relay A to open.

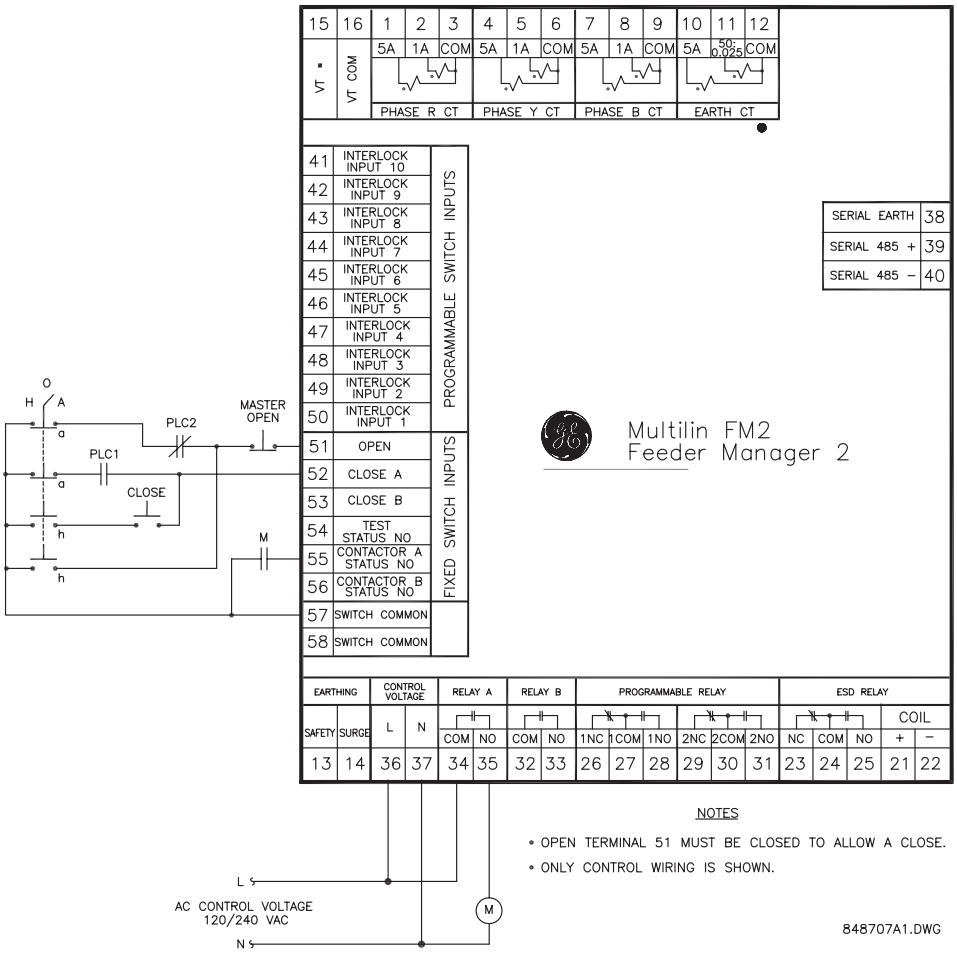


**FIGURE 10–4: HOA Three Wire Hand / Three Wire Auto**

# Hand/Auto Configuration

## 3-Wire Hand / 2-Wire Auto

This control scheme is used when it is desirable to control the feeder manually and automatically. In the Hand position the feeder is energised via the CLOSE button and de-energised via the OPEN button. In the auto position the feeder is energised automatically by the maintained PLC contact. When the PLC contact opens, the feeder opens.

To program the FM2 for three-wire hand / two-wire auto control (hand/auto configuration), make the following setpoint changes.

In the **S3 PROCESS ⇨ CONFIGURABLE INPUTS** menu, set:

**INTERLOCK INPUT 1** = "TWO WIRE CONTROL"
**INTERLOCK INPUT 2** = "AUTO PERMISSIVE"
**INTERLOCK INPUT 3** = "AUTO CLOSE A"

In the **S3 PROCESS ⇨⇨⇨ OPEN CONFIGURATION** menu, set:

**FACEPLATE OPEN** = "LATCHED"
**PROCESS OPEN** = "LATCHED"




The **INTERLOCK INPUT 1(3)** setpoints were chosen to match the wiring diagram provided. Any of the available Interlocks 1 through 10 could be programmed for "TWO WIRE CONTROL", "AUTO-PERMISSIVE", or "AUTO CLOSE A".

## Control Operation

HAND:

- In the hand position, the feeder is available to close.
- When the CLOSE button is pressed, the feeder closes.
- When the OPEN button or faceplate OPEN key is pressed, the feeder opens and a latched trip is generated. The feeder cannot be reclosed until RESET is pressed.

AUTO:

- In the auto position, the feeder is available to close.
- When the PLC contact closes, the feeder closes.
- When the PLC contact opens, the feeder opens.
- When the faceplate OPEN key is pressed, it causes a latched trip. The feeder cannot be reclosed until RESET is pressed.
- Close commands from the faceplate, serial port and terminals 52 and 53 are blocked.

Terminal 51 (Open input) must be closed to allow a close. The FM2 display will read "Feeder Unavailable" when the open input is open.

If feedback is not received by the Contactor A Status N.O. input within 0.25 second of closing Relay A, an Open Control Circuit alarm will occur. This will cause Relay A to open.

In the case of a faceplate *or* process open trip, the close signal to Terminal 52 should be removed if reclosing is not desired. When the FM2 RESET key is pressed, the feeder will be reclosed based on Terminal 52.

The OPEN button at the feeder control remains active in the auto mode.

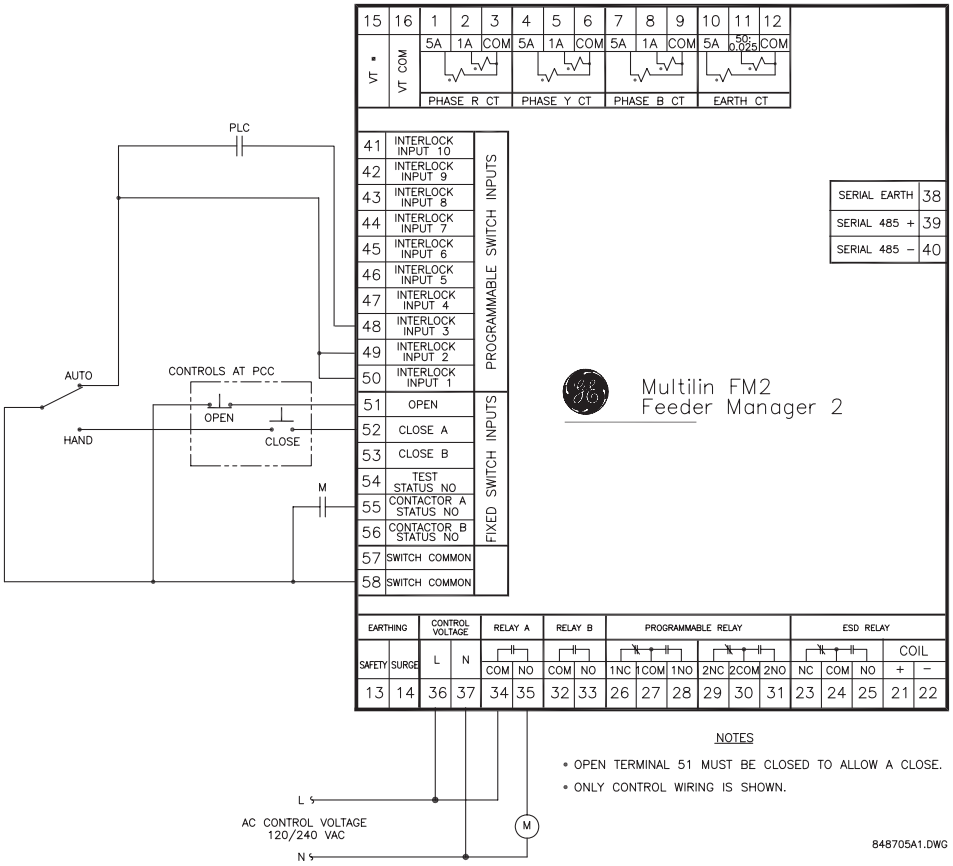


**FIGURE 10–5: HA Three Wire Hand / Two Wire Auto**




# Appendix



## Frequently Asked Questions

### Questions and Answers

Listed below are some of the more frequently asked questions by FM2 users. The list includes questions asked by consultants before the FM2 has even been specified to the end user and after the FM2 is installed and controlling a feeder.

**Q** **Does the FM2 support ladder logic as in a PLC?**

**A** No. The FM2 switch inputs do not allow total programmability as in PLCs; however, it does have a range of over 25 different dedicated functions that can be assigned for typical applications. These functions come complete with built in timers if necessary for that particular function. For example: Auto Permissive and Auto Close for PLC hard wired control, Two Wire Control for PLC close, Process Interlocks with starting and running override timers for pressure and flow monitoring.

**Q** **After wiring the FM2 into the control circuit, it remains UNAVAILABLE for closes. What does this mean?**

**A** Three conditions can cause the FM2 to remain UNAVAILABLE for closes:

1. The FM2 has tripped on a trip condition
2. The Open switch input (Terminal 51) is not energised.
3. If a Process Interlock function is assigned to one of the configurable switch inputs and the startup override is set to 0 seconds, the FM2 will remain unavailable until that switch input is energised.

**Q** **When a close is attempted, the feeder closes for a second then shuts off. The FM2 displays an OPEN CONTROL CIRCUIT alarm. What is the problem?**

**A** The FM2 must see feedback from the Contactor A or, if used, Contactor B within 0.25 second of the FM2 closing the contactor or the FM2 will open the feeder as it assumes that there is a problem in the circuitry for the feeder contactor coil. The feedback from the contactors go to the status inputs (terminals 15 & 16) of the FM2. NOTE: This condition will result in the toggling of the feeder contactor when the FM2 is in the Two Wire mode as there can be a constant close signal from the two wire device. Use the Open Control Circuit trip feature to prevent the toggling of the feeder contactor.

**Q: After connecting the FM2 through an interface device to a PLC network, communications to the FM2 cannot be established. What is the problem?**

**A:** Verify the following:

1. If master is communicating with Modbus® RTU protocol.
2. The wiring between the interface device and the FM2.
3. The FM2 communications address.
4. The master polling address.
5. The FM2 baud rate
6. The master baud rate.
7. The master parity settings.

If the problem persists, call GE Multilin for technical support.

**Q: Can the FM2 interface with an external analog device?**

**A:** No. The FM2 does not contain any analog inputs to monitor an external transducer.

**Q: Can the FM2 be used on medium voltage feeders?**

**A:** Yes. The FM2 was designed specifically for the medium voltage market (up to 12000 V). However, the protection features offered in the FM2 are typically not advanced enough for phase faults. The power measuring will accommodate up to 12000 V systems.

**Q: Can the control transformer in the PCC be used for the VT input on the FM2 as well as for control voltage?**

**A:** Yes, provided that control transformer secondary voltage is 110 to 120 V for the FM2-712 model, or 220 to 240 V for the FM2-722 model, corresponding to the **VT SECONDARY VOLTAGE** setpoint.

**Q: Can the CLOSE keys on the faceplate of the FM2 be disabled?**

**A:** Yes. One of the configurable switch inputs can be configured to Remote Permissive and a jumper placed from Switch Common to permanently energise that switch input. This will allow closes from the switch inputs of the FM2 only, when in the Manual mode.

# DOs and DON'Ts Checklist

## Description

For proper and reliable operation of the GE Multilin FM2 Feeder Manager 2, it is imperative that the steps, recommendations and practices listed below be adhered to at all times. This DO's and DON'Ts checklist has been compiled as a result of years of trouble free operation by a variety of GE Multilin products.

## FM2 Earthing

Users are requested to earth terminals 13 (safety earthing) and 14 (filter earthing) directly to the EARTH BUS using a heavy gauge wire or braided cable. Terminals 13 and 14 will accept up to #12 AWG wire. These terminals must be earthed for proper filtering of noise, and protection against transient conditions.

## Earthing of Phase and Earth Fault CTs

All external phase CT and earth fault CT secondary windings must be earthed to the EARTH BUS to keep the potential difference to a minimum. If the CT secondary windings are not earthed, capacitive coupling could allow the CT secondary voltage to float up to the voltage of the mains. This is a serious safety hazard. Note that Terminal 12 of the External Earth CT is internally earthed; therefore, do not earth terminal 11 since the Earth CT signal would then be shunted.

It is also recommended that, in addition to the solid earthing of the earth fault CT described above, a shielded twisted pair cable be employed when using the GE Multilin 50:0.025 earth CT. The reasoning behind this recommendation is that the 50:0.025 earth CTs are typically used on high resistance earthed systems where the fault currents are limited to less than 200 A. The alarm and trip levels on these systems are usually between 0.5 A and 15.0 A. This equates to a secondary current of 0.25 mA to 7.5 mA. Due to the very low levels that must be monitored by the FM2, any noise picked up by these secondary wires must be kept to a minimum.

## RS485 Communications Port

The FM2 interfaces with PCs, PLCs, and DCSs using the Modicon Modbus RTU protocol. The FM2 supports Modbus function codes 01, 03, 04, 05, 06, 07, 08, and 16. The communications port is a very important part of the FM2's process and control applications. The port allows reading and writing of data as well as full control to close and open the feeder from a remote location. For these reasons, proper wiring practices are critical.

- A shielded, twisted pair cable, such as 24 gauge Belden 9841 (120 Ω characteristic impedance) or equivalent, **MUST** be used for the communications link. The cable should be routed away from all power carrying cables, such as the feeder mains, power supply wiring, CT wiring and noisy contactors or breakers.
- When using the GE Multilin 232/485 converter box at the MASTER, **GE Multilin recommends placing no more than 32 GE Multilin devices** on the same data link which should be of **no greater length than 1500 m**. The devices on the data link should be daisy chained for reliable operation. Star or stub connections are **not recommended**. If more than 32 devices are required to go onto the data link, or the distance must be greater than 1500 m, consult the EIA 485 standard for more details on specific calculations. Another way to increase the number of units on the data link or the transmission length is to utilise a RS485 Repeater.
- The **shields** of the cable should be daisy-chained to all of the FM2 serial commons (Terminal 38) and earthed **at the MASTER only.** This provides a common reference for all of the devices on the data link, as well as, earthing the data link without creating the potential for earth loops. The potential difference between the FM2 safety earth (terminal 14) and the FM2 serial common (Terminal 38) **should not** exceed 36 V.
- A terminating network consisting of a 120 Ω / 0.25 W resistor in series with a 1 nF / 50 V general purpose mono ceramic or equivalent capacitor **MUST** be placed across the positive and negative terminals at both ends of the data link (terminals 39 and 40 on the FM2). This is to provide the 200 mV separation

between the +ve and –ve terminals of the device, as well as to eliminate any reflected signals and ringing.

### Switch Inputs

The FM2 has 16 switch inputs that operate on 120 V AC for the FM2-712 models and 240 V AC for the FM2-722 models.




**Terminals 57 and 58 are live at 120 V AC!**

An external source can be used to supply the circuitry into the FM2 switch inputs providing that the external source is *in phase* with the control voltage of the FM2. The FM2 switches the inputs on and off internally, to minimise power consumption, at a frequency determined by the control voltage. If the external source is not in phase with the control voltage to the FM2, the timing will be off which could cause errors when reading the switch inputs. If an external source is used to supply the control signals to the FM2 switch inputs, the source should be fused to protect against fault conditions in the circuitry.

### Open Switch Input

The Open switch input on the FM2 **MUST** be energised before the FM2 is available to perform a close. If the contactor is being energised and de-energised externally to the FM2, this terminal will need a jumper from terminal 57 or 58 before the FM2 will seal in Relay A.

### Contactor Status Feedback

The FM2 **MUST** see feedback from Contactor A and Contactor B auxiliary contacts into the applicable status switch inputs (Terminals 55 and 56) within 0.25 second of closing the output relays (A/B). If this feedback is not received, the FM2 will open the output relay instead of sealing it in, and will alarm with an Open Control Circuit.

## CT Isolation

### FM2 CT Withstand

**When is withstand important?**

Withstand is important when the phase or earth fault CT has the capability of driving a large amount of current into the interposing CTs in the relay. This typically occurs on retrofit installations when the CTs are not sized to the burden of the relay. New electronic relays have typically low burdens, while the older electromechanical relays have typically high burdens (e.g. 1 Ω).

For high current earth faults, the system will be either low resistance or solidly earthed. The limiting factor that determines the amount of earth fault current that can flow in these types of systems is the capacity of the source. Withstand is not important for earth fault on high resistance earthing systems. On these systems, a resistor makes the connection from source to earth at the source (generator, transformer). The resistor value is chosen such that in the event of a earth fault, the current that flows is limited to a low value, typically 5, 10, or 20 A.

Since the potential for very large faults exists (earth faults on high resistance earthed systems excluded), the fault must be cleared as quickly as possible.




**Care must he taken to ensure that the interrupting device is capable of interrupting the potential fault. If not, some other method of interrupting the fault should be used, and the feature in question should be disabled (e.g. a fused contactor relies on fuses to interrupt large faults).**

### CT Size and Saturation

**How do I know how much current my CTs can output?**

CT characteristics may be acquired by one of two methods.

The rating (as per ANSI/IEEE C57.13.1) for relaying class CTs may be given in a format such as these: 2.5C100, 10T200, T100, 10C50, or C200. The number preceding the letter represents the maximum ratio correction; no number in this position implies that the CT accuracy remains within a 10% ratio correction from 0 to 20

times rating. The letter is an indication of the CT type. A 'C' (formerly L) represents a CT with a low leakage flux in the core where there is no appreciable effect on the ratio when used within the limits dictated by the class and rating. The 'C' stands for calculated; the actual ratio correction should be different from the calculated ratio correction by no more than 1%. A 'C' type CT is typically a bushing, window, or bar type CT with uniformly distributed windings. A 'T' (formerly H) represents a CT with a high leakage flux in the core where there is significant effect on CT performance. The 'T' stands for test; since the ratio correction is unpredictable, it is to be determined by test. A 'T' type CT is typically primary wound with unevenly distributed windings. The subsequent number specifies the **secondary terminal voltage** that may be delivered by the full winding at 20 times rated secondary current without exceeding the ratio correction specified by the first number of the rating. (Example: a 10C100 can develop 100 V at 20 × 5A, therefore an appropriate external burden would be 1 Ω or less to allow 20 times rated secondary current with less than 10% ratio correction). Note that the voltage rating is at the secondary terminals of the CT and the internal voltage drop across the secondary resistance must be accounted for in the design of the CT. There are seven voltage ratings: 10, 20, 50, 100, 200, 400, and 800. If a CT comes close to a higher rating, but does not meet or exceed it, then the CT must be rated to the lower value.

The curve below represents a typical excitation curve for a CT. The Y-axis represents secondary exciting voltage; the X-axis represents the secondary exciting current. When the CT secondary exciting voltage level is picked off the graph, the corresponding secondary exciting current is the amount of current required to excite the core of the CT. With respect to the ideal CT that conforms perfectly to its ratio, the exciting current could be considered loss.

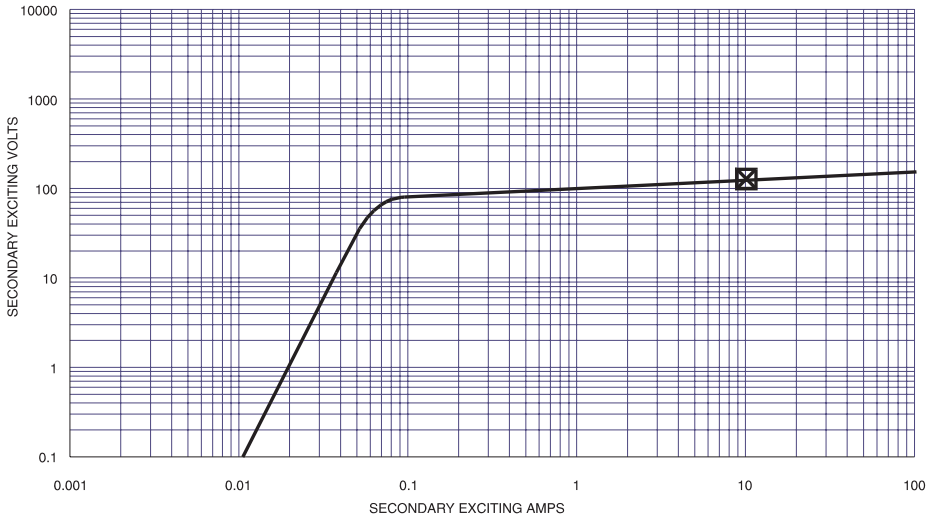


**FIGURE A–1: Excitation Curves**

For a Protection Class CT with a 5A secondary and maximum 10% ratio error correction, it is probable that the design point for 20 times rated secondary will be at or slightly lower than the 10 A secondary exciting current point (10% of 20 × 5 A). To design such that the 20 times rated secondary current is in the linear region would be more expensive.

In order to determine how much current CTs can output, the secondary resistance of the CTs is required. This resistance will be part of the equation as far as limiting the current flow. This is determined by the maximum voltage that may be developed by the CT secondary divided by the entire secondary resistance, CT secondary resistance included.

The easiest method of evaluating a CT is by the Excitation Curves Method, as illustrated by the curves shown below. The Y-axis represents secondary exciting voltage; the X-axis represents the secondary exciting current. These curves may be obtained from the CT manufacturer, or by experimentation (see ANSI/IEEE

C57.13.1 for procedures). The curves illustrate the values of secondary volts for which the output of the CT will be linear. The desired operating secondary voltage is below the kneepoint (A or B on the graph (ANSI or IEC respectively) or just slightly above it, staying within 10% CT ratio error correction at 20 times rating. Using this information, it is important to recognise that the secondary exciting voltage is the total voltage that the CT can develop at the secondary. In this case, that voltage will drop across the secondary winding resistance as well as any load that is applied to the unit. Therefore, the secondary winding resistance must always be included with the excitation curves, or the information is incomplete.

A curve with a knee at 100 V for example could drive a total burden of:

$$\frac{100\ \text{V}}{20 \times 5\ \text{A}} = 1\ \Omega \qquad \textbf{(EQ A.1)}$$

Evaluation of CT performance is best determined from the excitation curves. They present the complete story and eliminate any guess work. Most CT manufacturers will provide excitation curves upon request.

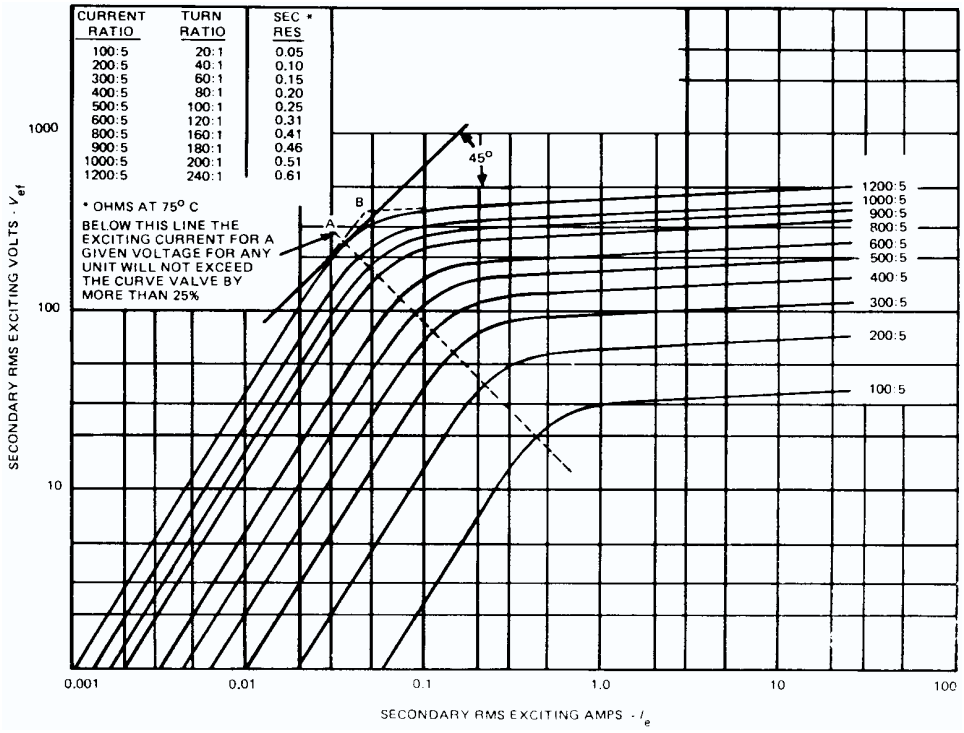


**FIGURE A–2: Excitation Curves Method**

# Revision History

## Release Dates

**TABLE A–1: Release Dates**

| MANUAL | GE PART NO. | FM2 REVISION | RELEASE DATE |
|---|---|---|---|
| GEK-106559 | 1601-0154-A1 | 1.0x | June 4, 2004 |
| GEK-106559A | 1601-0154-A2 | 1.1x | August 3, 2005 |
| GEK-106559B | 1601-0154-A3 | 1.1x | October 7, 2005 |

# GE Multilin Warranty

## Warranty Statement

General Electric Multilin (GE Multilin) warrants each device it manufactures to be free from defects in material and workmanship under normal use and service for a period of 24 months from date of shipment from factory.

In the event of a failure covered by warranty, GE Multilin will undertake to repair or replace the device providing the warrantor determined that it is defective and it is returned with all transportation charges prepaid to an authorised service centre or the factory. Repairs or replacement under warranty will be made without charge.

Warranty shall not apply to any device which has been subject to misuse, negligence, accident, incorrect installation or use not in accordance with instructions nor any unit that has been altered outside a GE Multilin authorised factory outlet.

GE Multilin is not liable for special, indirect or consequential damages or for loss of profit or for expenses sustained as a result of a device malfunction, incorrect application or adjustment.

For complete text of Warranty (including limitations and disclaimers), refer to GE Multilin Standard Conditions of Sale.




# Index

## Numerics

2-WIRE CONTROL ..... 5-12

## A

ACTUAL VALUES
  main menu ..... 6-2
  viewing with EnerVista FM2 setup software ..... 4-5
APPLICATIONS ..... 7-9
AUX 2 COIL ..... 2-5

## B

BOOT PROGRAM VERSION ..... 5-18
BROADCAST COMMAND ..... 7-10

## C

CAUSE OF TRIP ..... 6-4
CLEAR COUNTERS ..... 5-5
CLEAR ENERGY USED ..... 5-5
CLEAR TIMERS ..... 5-5
CLOSE A/B KEY ..... 2-6
COMMUNICATIONS
  error checking ..... 7-2
  failure setpoints ..... 5-5
  Modbus ..... 7-1
  RS232 ..... 4-3
  RS485 ..... 4-3, 11-3
CONFIGURABLE SWITCH INPUTS ..... 2-5
CONTACTOR INSPECTION ..... 5-17
CONTACTOR STATUS ..... 2-6
CONTACTOR STATUS FEEDBACK ..... 11-4
CONTROL SCHEMES
  three wire hand / three wire auto ..... 10-6
  three wire hand / two wire auto ..... 10-5
  two wire ..... 10-8
  two wire hand / two wire auto ..... 10-2, 10-3
COUNTERS, CLEARING ..... 5-5
CRC-16 ALGORITHM ..... 7-3
CT INPUTS ..... 2-4
CT ISOLATION ..... 11-4
CT SATURATION ..... 11-4
CT SIZE ..... 11-4
CTs
  excitation curves ..... 11-5
  isolation ..... 11-4
  saturation ..... 11-4
  size ..... 11-4

## D

DATA FORMATS
  frame format ..... 7-1
  modbus ..... 7-21
  packet format ..... 7-2
DATA PACKET SYNCHRONIZATION ..... 7-3
DATA RATE ..... 7-1
DIELECTRIC STRENGTH TESTING ..... 2-7
DO'S AND DONT'S ..... 11-3

## E

EARTH CURRENT ..... 6-3
EARTH FAULT ALARM ..... 5-10
EARTH FAULT CT ..... 2-4
EARTH FAULT CT INPUT ..... 5-4
EARTH FAULT CURRENT FUNCTIONS ..... 8-3
EARTHING
  phase and earth fault CTs ..... 11-3
ELECTRICAL INTERFACE ..... 7-1
ENERGY USED ..... 5-5
ERROR CHECKING ..... 7-2
ERROR RESPONSES ..... 7-8
ESD COIL ..... 2-5
EXTERNAL CONNECTIONS ..... 2-5

## F

FACEPLATE OPEN ..... 5-14
FEEDER STATUS ..... 6-3
FIELD OPEN ..... 5-14
FIRMWARE
  upgrading via EnerVista 369 setup software ..... 4-8

FREQUENCY ..... 5-4
FUNCTIONAL TESTS ..... 8-3

## H

HI-POT TESTING ..... 2-7

## I

IEC CURVES
  constants ..... 5-6
  trip times ..... 5-6
IED SETUP ..... 4-2
INPUT FUNCTIONS ..... 8-4
INPUTS
  open switch ..... 11-4
  switch ..... 11-4
INSTALLATION ..... 2-1
INTERLOCK INPUTS 1-10 ..... 5-11
INTERNAL FAULT TRIP ..... 5-5

## L

LOCAL ISOLATOR ..... 2-6

## M

MEMORY MAP ..... 7-11
MOD NUMBER ..... 5-18
MODBUS ..... 1-1
  data formats ..... 7-21
  function code 01 ..... 7-4
  function code 03 ..... 7-4
  function code 04 ..... 7-5
  function code 05 ..... 7-6
  function code 06 ..... 7-6
  function code 07 ..... 7-7
  function code 08 ..... 7-7
  function code 10 ..... 7-8
  memory map ..... 7-11
  supported functions ..... 7-3
MODEL NUMBERS ..... 1-2

## N

NOMINAL FREQUENCY ..... 5-4

## O

OPEN ..... 2-6
OPEN KEY ..... 2-6
OPEN SWITCH INPUT ..... 11-4
OPENED TIME ..... 6-7
ORDER CODES ..... 1-2
ORDER INFORMATION ..... 5-18
OUTPUT RELAYS ..... 2-5

## P

PHASE CT INPUTS ..... 2-4
PHASE CT PRIMARY AMPS ..... 5-4
PHASE CURRENT FUNCTIONS ..... 8-3
PHASE CURRENTS ..... 6-3
PHASE UNBALANCE ..... 6-3
POWER FAIL TEST ..... 8-4
PRIMARY INJECTION TESTING ..... 8-1
PROCESS OPEN ..... 5-14

## Q

QUESTIONS AND ANSWERS ..... 11-1

## R

RS232 COMMUNICATIONS
  configuring with EnerVista FM2 setup ..... 4-3
RS485
  communications port ..... 11-3
RS485 COMMUNICATIONS
  configuring with EnerVista FM2 setup ..... 4-3
RUNNING TIME ..... 6-7

## S

SECONDARY INJECTION TESTING ..... 8-1, 8-2
SELECTION GUIDE ..... 1-2
SERIAL COMMS FAILURE ..... 5-5
SERIAL COMMUNICATION PORT ..... 2-5
SERIAL NUMBER ..... 5-18
SETPOINT MESSAGE MAP ..... 5-1
SETPOINTS
  entering with EnerVista FM2 setup software ..... 4-4
  loading from a file ..... 4-5
  messages ..... 5-1
  saving to a file ..... 4-5, 4-8
SOFTWARE
  actual values ..... 4-5
  entering setpoints ..... 4-4
  hardware requirements ..... 4-1
  installation ..... 4-2
  loading setpoints ..... 4-5
  overview ..... 4-1
  saving setpoints ..... 4-5, 4-8
  serial communications ..... 4-3
SPECIFICATIONS ..... 1-3
STARTUP OVERRIDE ..... 5-11
SUPPLY VOLTAGE ..... 2-4
SURGE EARTHING ..... 2-5
SWITCH COMMON ..... 2-7
SWITCH INPUTS ..... 2-5, 11-4
SYSTEM FREQUENCY ..... 5-4

## T

TECHNICAL SPECIFICATIONS ..... 1-3
TESTING
  functional ..... 8-3
  primary injection ..... 8-1

secondary injection ..... 8-2
THREE WIRE HAND/2 WIRE AUTO CONTROL ..... 10-5
THREE WIRE HAND/AUTO CONTROL ..... 10-6
TIMERS
clearing ..... 5-5
TRIP COUNTER
actual values ..... 6-8
clearing ..... 5-5
TROUBLESHOOTING ..... 11-3
TWO WIRE CONTROL
control schemes ..... 10-1
description ..... 10-2
setpoints ..... 5-12
TWO WIRE HAND/AUTO CONTROL ..... 10-2, 10-3

## U

UNBALANCE ..... 6-3
UPGRADING FIRMWARE ..... 4-8

## V

VT CONNECTION TYPE ..... 5-4
VT PRIMARY VOLTAGE ..... 5-4
VT SECONDARY VOLTAGE ..... 5-4

## W

WARRANTY ..... 11-7